Federal Register

5–24–10 Monday
Vol. 75 No. 99 May 24, 2010

Pages 28751–29182

The **FEDERAL REGISTER** (ISSN 0097–6326) is published daily, Monday through Friday, except official holidays, by the Office of the Federal Register, National Archives and Records Administration, Washington, DC 20408, under the Federal Register Act (44 U.S.C. Ch. 15) and the regulations of the Administrative Committee of the Federal Register (1 CFR Ch. I). The Superintendent of Documents, U.S. Government Printing Office, Washington, DC 20402 is the exclusive distributor of the official edition. Periodicals postage is paid at Washington, DC.

The **FEDERAL REGISTER** provides a uniform system for making available to the public regulations and legal notices issued by Federal agencies. These include Presidential proclamations and Executive Orders, Federal agency documents having general applicability and legal effect, documents required to be published by act of Congress, and other Federal agency documents of public interest.

Documents are on file for public inspection in the Office of the Federal Register the day before they are published, unless the issuing agency requests earlier filing. For a list of documents currently on file for public inspection, see *www.federalregister.gov.*

The seal of the National Archives and Records Administration authenticates the Federal Register as the official serial publication established under the Federal Register Act. Under 44 U.S.C. 1507, the contents of the **Federal Register** shall be judicially noticed.

The **Federal Register** is published in paper and on 24x microfiche. It is also available online at no charge as one of the databases on GPO Access, a service of the U.S. Government Printing Office.

The online edition of the **Federal Register**, *www.gpoaccess.gov/nara,* available through GPO Access, is issued under the authority of the Administrative Committee of the Federal Register as the official legal equivalent of the paper and microfiche editions (44 U.S.C. 4101 and 1 CFR 5.10). It is updated by 6 a.m. each day the **Federal Register** is published and includes both text and graphics from Volume 59, Number 1 (January 2, 1994) forward.

For more information about GPO Access, contact the GPO Access User Support Team, call toll free 1-888-293-6498; DC area 202-512-1530; fax at 202-512-1262; or via e-mail at *gpoaccess@gpo.gov.* The Support Team is available between 7:00 a.m. and 9:00 p.m. Eastern Time, Monday–Friday, except official holidays.

The annual subscription price for the **Federal Register** paper edition is $749 plus postage, or $808, plus postage, for a combined **Federal Register, Federal Register** Index and List of CFR Sections Affected (LSA) subscription; the microfiche edition of the **Federal Register** including the **Federal Register** Index and LSA is $165, plus postage. Six month subscriptions are available for one-half the annual rate. The prevailing postal rates will be applied to orders according to the delivery method requested. The price of a single copy of the daily **Federal Register,** including postage, is based on the number of pages: $11 for an issue containing less than 200 pages; $22 for an issue containing 200 to 400 pages; and $33 for an issue containing more than 400 pages. Single issues of the microfiche edition may be purchased for $3 per copy, including postage. Remit check or money order, made payable to the Superintendent of Documents, or charge to your GPO Deposit Account, VISA, MasterCard, American Express, or Discover. Mail to: U.S. Government Printing Office—New Orders, P.O. Box 979050, St. Louis, MO 63197-9000; or call toll free 1-866-512-1800, DC area 202-512-1800; or go to the U.S. Government Online Bookstore site, see *bookstore.gpo.gov.*

There are no restrictions on the republication of material appearing in the **Federal Register.**

How To Cite This Publication: Use the volume number and the page number. Example: 75 FR 12345.

Postmaster: Send address changes to the Superintendent of Documents, Federal Register, U.S. Government Printing Office, Washington, DC 20402, along with the entire mailing label from the last issue received.

SUBSCRIPTIONS AND COPIES

PUBLIC

Subscriptions:

Paper or fiche	**202–512–1800**
Assistance with public subscriptions	**202–512–1806**
General online information	**202–512–1530; 1–888–293–6498**

Single copies/back copies:

Paper or fiche	**202–512–1800**
Assistance with public single copies	**1–866–512–1800 (Toll-Free)**

FEDERAL AGENCIES

Subscriptions:

Paper or fiche	**202–741–6005**
Assistance with Federal agency subscriptions	**202–741–6005**

FEDERAL REGISTER WORKSHOP

THE FEDERAL REGISTER: WHAT IT IS AND HOW TO USE IT

FOR: Any person who uses the Federal Register and Code of Federal Regulations.

WHO: Sponsored by the Office of the Federal Register.

WHAT: Free public briefings (approximately 3 hours) to present:

1. The regulatory process, with a focus on the Federal Register system and the public's role in the development of regulations.
2. The relationship between the Federal Register and Code of Federal Regulations.
3. The important elements of typical Federal Register documents.
4. An introduction to the finding aids of the FR/CFR system.

WHY: To provide the public with access to information necessary to research Federal agency regulations which directly affect them. There will be no discussion of specific agency regulations.

WHEN: Tuesday, June 8, 2010
9 a.m.–12:30 p.m.

WHERE: Office of the Federal Register
Conference Room, Suite 700
800 North Capitol Street, NW.
Washington, DC 20002

RESERVATIONS: (202) 741–6008

Printed on recycled paper.

Contents

Federal Register

Vol. 75, No. 99

Monday, May 24, 2010

Administration on Aging
See Aging Administration

Aging Administration
NOTICES
Agency Information Collection Activities; Proposals, Submissions, and Approvals:
Alzheimer's Disease Supportive Services Program Standardized Data Collection, 28809–28810

Agriculture Department
See Food Safety and Inspection Service
See Foreign Agricultural Service
See Forest Service
See Natural Resources Conservation Service
See Rural Utilities Service

Centers for Disease Control and Prevention
NOTICES
Meetings:
Disease, Disability, and Injury Prevention and Control Special Emphasis Panel, 28810
Statement of Organization, Functions, and Delegations of Authority, 28811–28813

Civil Rights Commission
NOTICES
Meetings:
Michigan Advisory Committee, 28780

Coast Guard
RULES
Drawbridge Operation Regulation:
Long Island, New York Inland Waterway from East Rockaway Inlet to Shinnecock Canal, Hempstead, NY, Maintenance, 28757
Security Zone:
Potomac River, Washington Channel, Washington, DC, 28757–28760
PROPOSED RULES
Drawbridge Operation Regulation:
Passaic River, Clifton, NJ, 28766–28769
Safety Zone:
Osage River, Mile 016.8 to 017.2, 28769–28771

Commerce Department
See Industry and Security Bureau
See International Trade Administration
See National Institute of Standards and Technology
See National Oceanic and Atmospheric Administration
See National Telecommunications and Information Administration
See Patent and Trademark Office

Consumer Product Safety Commission
PROPOSED RULES
Publicly Available Consumer Product Safety Information Database, 29156–29181

Defense Department
See Navy Department
PROPOSED RULES
Federal Acquisition Regulation:
FAR Case 2009–027, Personal Identity Verification of Contractor Personnel, 28771–28772
NOTICES
Agency Information Collection Activities; Proposals, Submissions, and Approvals:
Prospective Subcontractor Requests for Bonds, 28808
Meetings:
Federal Advisory Committee; Department of Defense Wage Committee, 28786
Federal Advisory Committee; National Defense Intelligence, 28786

Department of Transportation
See Pipeline and Hazardous Materials Safety Administration

Education Department
NOTICES
Funding Availability:
Charter Schools Program Grants for Replication and Expansion of High-Quality Charter Schools, 28789–28795

Energy Department
See Energy Efficiency and Renewable Energy Office
See Federal Energy Regulatory Commission
PROPOSED RULES
Acquisition Regulations:
Access to and Ownership of Records, 28772–28776

Energy Efficiency and Renewable Energy Office
NOTICES
Energy Efficiency and Conservation Block Grant Program:
Funding Opportunity Announcement (DE–FOA–0000013), 28801–28802

Environmental Protection Agency
NOTICES
Agency Information Collection Activities; Proposals, Submissions, and Approvals:
NESHAP for the Manufacture of Amino/Phenolic Resins, 28802–28803
RadNet (Renewal), 28803–28804
An Exposure Assessment of Polybrominated Diphenyl Ethers (PBDEs); Availability, 28804–28805
Meetings:
SAB Dioxin Review Panel, 28805–28806

Farm Credit Administration
NOTICES
Meetings; Sunshine Act, 28806

Federal Aviation Administration
RULES
Airworthiness Directives:
Bell Helicopter Textron (Bell) Model 205A, 205A–1, 205B, 212, 412, 412EP, and 412CF and Agusta S.p.A. (Agusta) Model AB412, AB412EP Helicopters, 28751–28752

Amendment and Establishment of Restricted Areas and Other Special Use Airspace:
Avon Park Air Force Range; FL, 28752–28756
Amendment of Restricted Area R–2502A:
Fort Irwin, CA, 28756–28757
PROPOSED RULES
Amendment of Class E Airspace:
Pine Mountain, GA, 28765–28766
NOTICES
Meetings:
Joint RTCA Special Committee 213, etc., 28852

Federal Communications Commission
NOTICES
Agency Information Collection Activities; Proposals, Submissions, and Approvals, 28806–28807

Federal Deposit Insurance Corporation
NOTICES
Update Listing of Financial Institutions in Liquidation, 28807

Federal Election Commission
NOTICES
Meetings; Sunshine Act, 28807–28808

Federal Energy Regulatory Commission
NOTICES
Combined Filings, 28795–28801

Federal Highway Administration
NOTICES
Final Federal Agency Actions on Proposed Highway in Washington, 28851–28852

Fish and Wildlife Service
NOTICES
Guam National Wildlife Refuge; Yigo, Guam, 28816–28817

Food Safety and Inspection Service
PROPOSED RULES
Permission to Use Air Inflation of Meat Carcasses and Parts, 28763–28765

Foreign Agricultural Service
NOTICES
Trade Adjustment Assistance for Farmers, 28780

Forest Service
NOTICES
Agency Information Collection Activities; Proposals, Submissions, and Approvals:
Financial Information Security Request Form, 28777
Pre-Decisional Objection Process for Hazardous Fuel Reduction Projects Authorized by the Healthy Forest Restoration Act of (2003), 28777–28778
Meetings:
Amador County Resource Advisory Committee, 28779
Modoc County Resource Advisory Committee, 28779
Prince of Whales Resource Advisory Committee, 28779–28780

General Services Administration
PROPOSED RULES
Federal Acquisition Regulation:
FAR Case 2009–027, Personal Identity Verification of Contractor Personnel, 28771–28772
NOTICES
Agency Information Collection Activities; Proposals, Submissions, and Approvals:
Prospective Subcontractor Requests for Bonds, 28808

Health and Human Services Department
See Aging Administration
See Centers for Disease Control and Prevention
See National Institutes of Health
NOTICES
Request for Comments:
Draft Report on Genetics Education and Training of Health Care Professionals, 28809

Homeland Security Department
See Coast Guard

Housing and Urban Development Department
NOTICES
Agency Information Collection Activities; Proposals, Submissions, and Approvals:
Capital Advance Program Submission Requirements, etc., 28813–28814
FHA Lender Approval, Annual Renewal, Periodic Updates, etc., 28814–28815
Owner of Record and Re-sale Data to Preclude Predatory Lending Practices (Property Flipping), etc., 28814
Application and Re-certification Packages for Approval of Nonprofit Organizations in FHA Activities, 28815–28816

Industry and Security Bureau
NOTICES
Agency Information Collection Activities; Proposals, Submissions, and Approvals:
Procedure for Voluntary Self-Disclosure of Violations of Export Administration Regulations, 28780–28781

Interior Department
See Fish and Wildlife Service
See Land Management Bureau
See National Park Service

Internal Revenue Service
NOTICES
Quarterly Publication of Individuals, Who Have Chosen To Expatriate, as Required (Section 6039G), 28853–28856

International Trade Administration
NOTICES
Consolidated Decision on Applications for Duty-Free Entry of Electron Microscopes:
Liquid Crystal Institute, et al., 28782

Justice Department
NOTICES
Agency Information Collection Activities; Proposals, Submissions, and Approvals, 28818–28819
Lodging of Consent Decrees Under CERCLA, 28819–28820
Lodging of Consent Decrees Under The Resource Conservation And Recovery Act, 28820
Meetings:
Heavy Duty Diesel Engine Consent Decrees; Teleconference, 28820–28821

Labor Department
See Occupational Safety and Health Administration

Land Management Bureau
NOTICES
Alaska Native Claims Selection, 28816
Realty Action:
Proposed Sale of Public Land, Wyoming, 28818

National Aeronautics and Space Administration
PROPOSED RULES
Federal Acquisition Regulation:
FAR Case 2009–027, Personal Identity Verification of Contractor Personnel, 28771–28772
NOTICES
Agency Information Collection Activities; Proposals, Submissions, and Approvals:
Prospective Subcontractor Requests for Bonds, 28808
Meetings:
NASA Advisory Council; Commercial Space Committee, 28821

National Institute of Standards and Technology
NOTICES
Meetings:
Visiting Committee on Advanced Technology, 28785–28786

National Institutes of Health
NOTICES
Meetings:
National Institute of General Medical Sciences, 28810
Proposed Actions under the NIH Guidelines for Research Involving Recombinant DNA Molecules, 28811

National Oceanic and Atmospheric Administration
RULES
Fisheries of Caribbean, Gulf of Mexico, and South Atlantic:
Reef Fish Fishery of Gulf of Mexico; Amendment 31; Correction, 28760
Shrimp Fishery of Gulf of Mexico and South Atlantic; Revisions to Allowable Bycatch Reduction Devices, 28760–28762
Fisheries of Northeastern United States:
Atlantic Mackerel, Squid, and Butterfish Fisheries; Amendment 10; Correction, 28762
NOTICES
Meetings:
South Atlantic Fishery Management Council, 28783–28785
Western Pacific Fishery Management Council, 28785

National Park Service
NOTICES
National Register of Historic Places; Pending Nominations and Related Actions, 28817–28818

National Science Foundation
NOTICES
Meetings:
Advisory Panel for Integrative Activities, 28821

National Telecommunications and Information Administration

NOTICES
Agency Information Collection Activities; Proposals, Submissions, and Approvals:
Broadband Subscription and Usage Supplement to the Census Bureau's Current Population Survey, 28781–28782

Natural Resources Conservation Service
NOTICES
Magma Flood Retarding Structure (FRS) Supplemental Watershed Plan, Pinal County, AZ, 28778–28779

Navy Department
NOTICES
Availability for Donation as a Museum/Memorial, the Battleship ex-IOWA (BB 61), 28786–28788
Preferred Supplier Program (PSP), 28788–28789

Nuclear Regulatory Commission
NOTICES
Applications:
Duke Energy Carolina, LLC, 28822–28823
Meetings:
ACRS Subcommittee on ABWR, 28824
ACRS Subcommittee on Planning and Procedures, 28823–28824
ACRS Subcommittee on Plant License Renewal, 28824–28825
The ACRS Subcommittee on APWR, 28824

Occupational Safety and Health Administration
PROPOSED RULES
Walking – Working Surfaces and Personal Protective Equipment (Fall Protection Systems), 28862–29153

Patent and Trademark Office
NOTICES
Extension Period:
National Medal of Technology and Innovation Nomination Evaluation Committee, 28782–28783

Pipeline and Hazardous Materials Safety Administration
NOTICES
Application for Special Permits, 28850–28851

Rural Utilities Service
NOTICES
Broadband Initiatives Program, 28778

Securities and Exchange Commission
NOTICES
Order Granting Temporary Conditional Exemption for Nationally Recognized Statistical Rating Organizations, etc., 28825–28828
Self-Regulatory Organizations; Proposed Rule Changes:
BATS Exchange, Inc., 28834–28836
Chicago Board Options Exchange, Inc., 28847–28848
Chicago Stock Exchange, Inc., 28842–28843
EDGA Exchange, Inc., 28833–28834
EDGX Exchange, Inc., 28844–28845
Financial Industry Regulatory Authority, Inc., 28841–28842
International Securities Exchange LLC, 28836–28837
NASDAQ OMX BX, Inc., 28828–28830
NASDAQ Stock Market LLC, 28839–28841
National Stock Exchange, Inc., 28845–28847
New York Stock Exchange LLC, 28831–28833
NYSE Amex LLC, 28837–28839
NYSE Arca, Inc., 28830–28831

State Department
NOTICES
Culturally Significant Objects Imported for Exhibition Determinations:
Original Copy; Photography of Sculpture, 1839 to Today, 28848

Determinations and Certifications Under Section 40a of Arms Export Control Act, 28848
Lifting of Policy of Denial of Munitions Export Licenses and Other Approvals Destined for Tula Instrument Design Bureau, 28848–28849
Renewal of Cultural Property Advisory Committee Charter, 28849
Review of Designation as Foreign Terrorist Organization, etc.:
Ansar al–Islam (aka Ansar Al–Sunnah and other aliases), 28849

Susquehanna River Basin Commission
NOTICES
Meetings:
Public Hearing and Commission, 28849–28850

Transportation Department
See Federal Aviation Administration
See Federal Highway Administration
See Pipeline and Hazardous Materials Safety Administration

Treasury Department
See Internal Revenue Service
NOTICES
Agency Information Collection Activities; Proposals, Submissions, and Approvals, 28853

Veterans Affairs Department
NOTICES
Agency Information Collection Activities; Proposals, Submissions, and Approvals:
Caution to Bidders—Bid Envelopes, 28859
Inquiry Concerning Applicant for Employment, 28857
IRIS, 28856
Purchase of Shellfish, 28858–28859
Service Data Manual, 28858
Special Notice, 28858
Technical Industry Standards, 28857

Separate Parts In This Issue

Part II
Labor Department, Occupational Safety and Health Administration, 28862–29153

Part III
Consumer Product Safety Commission, 29156–29181

Reader Aids

Consult the Reader Aids section at the end of this page for phone numbers, online resources, finding aids, reminders, and notice of recently enacted public laws.

To subscribe to the Federal Register Table of Contents LISTSERV electronic mailing list, go to http://listserv.access.gpo.gov and select Online mailing list archives, FEDREGTOC-L, Join or leave the list (or change settings); then follow the instructions.

CFR PARTS AFFECTED IN THIS ISSUE

A cumulative list of the parts affected this month can be found in the Reader Aids section at the end of this issue.

9 CFR

Proposed Rules:

310 28763

14 CFR

39 28751

73 (2 documents) 28752, 28756

Proposed Rules:

71 28765

16 CFR

Proposed Rules:

1102 29156

29 CFR

Proposed Rules:

1910 28862

33 CFR

117 28757

165 28757

Proposed Rules:

117 28766

165 28769

48 CFR

Proposed Rules:

4 28771

52 28771

904 28772

952 28772

970 28772

50 CFR

622 (2 documents) 28760

648 28762

Rules and Regulations

Federal Register
Vol. 75, No. 99
Monday, May 24, 2010

This section of the FEDERAL REGISTER contains regulatory documents having general applicability and legal effect, most of which are keyed to and codified in the Code of Federal Regulations, which is published under 50 titles pursuant to 44 U.S.C. 1510.

The Code of Federal Regulations is sold by the Superintendent of Documents. Prices of new books are listed in the first FEDERAL REGISTER issue of each week.

DEPARTMENT OF TRANSPORTATION

Federal Aviation Administration

14 CFR Part 39

[Docket No. FAA–2010–0487; Directorate Identifier 2010–SW–032–AD; Amendment 39–16295; AD 2010–10–16]

RIN 2120–AA64

Airworthiness Directives; Bell Helicopter Textron (Bell) Model 205A, 205A–1, 205B, 212, 412, 412EP, and 412CF and Agusta S.p.A. (Agusta) Model AB412, AB412EP Helicopters

AGENCY: Federal Aviation Administration, DOT.

ACTION: Final rule; request for comments.

SUMMARY: This amendment adopts a new airworthiness directive (AD) for the Aeronautical Accessories, Inc. (AAI) Low Skid Landing Gear Forward Crosstube (Crosstube) on certain Bell and Agusta model helicopters. This action requires replacing certain AAI serial-numbered crosstubes installed on these model helicopters. This amendment is prompted by the discovery of a defect in the raw material used in manufacturing certain crosstubes. The actions specified in this AD are intended to prevent failure of a crosstube and subsequent collapse of the landing gear.

DATES: Effective June 8, 2010.

Comments for inclusion in the Rules Docket must be received on or before July 23, 2010.

ADDRESSES: Use one of the following addresses to submit comments on this AD:

- *Federal eRulemaking Portal:* Go to *http://www.regulations.gov.* Follow the instructions for submitting comments.
- *Fax:* 202–493–2251.
- *Mail:* U.S. Department of Transportation, Docket Operations, M–30, West Building Ground Floor, Room W12–140, 1200 New Jersey Avenue, SE., Washington, DC 20590.
- *Hand Delivery:* U.S. Department of Transportation, Docket Operations, M–30, West Building Ground Floor, Room W12–140, 1200 New Jersey Avenue, SE., Washington, DC 20590, between 9 a.m. and 5 p.m., Monday through Friday, except Federal holidays.

You may get the service information identified in this AD from Aeronautical Accessories, Inc., P.O. Box 3689, Bristol, Tennessee 37625–3689, telephone (423) 538–5151 or 1–800–251–7094, fax (423) 538–8469.

Examining the Docket: You may examine the docket that contains the AD, any comments, and other information on the Internet at *http://www.regulations.gov,* or in person at the Docket Operations office between 9 a.m. and 5 p.m., Monday through Friday, except Federal holidays. The Docket Operations office (telephone (800) 647–5527) is located in Room W12–140 on the ground floor of the West Building at the street address stated in the **ADDRESSES** section. Comments will be available in the AD docket shortly after receipt.

FOR FURTHER INFORMATION CONTACT: DOT/FAA Southwest Region, Martin R. Crane, ASW–170, Aviation Safety Engineer, Rotorcraft Directorate, Rotorcraft Certification Office, 2601 Meacham Blvd., Fort Worth, Texas 76137, telephone (817) 222–5170, fax (817) 222–5783.

SUPPLEMENTARY INFORMATION: This amendment adopts a new AD for the Bell Model 205A, 205A–1, 205B, 212, 412, 412EP, and 412CF and Agusta Model AB412, AB412EP helicopters. This action requires replacing certain AAI serial-numbered crosstubes installed on these model helicopters. This amendment is prompted by AAI's discovery of a defect in a batch of raw material used in the manufacture of these crosstubes. Preliminary tests indicate that surface cracking on the inner wall of the tubing was introduced during the manufacturing process. There have been no failures reported in the field. The defect was discovered during the forming operation at AAI. This condition, if not corrected, could result in failure of a crosstube and subsequent collapse of the landing gear.

We have reviewed AAI Alert Service Bulletin No. AA–10012, dated March 5, 2010 (ASB), which describes a possible defect in the material used to manufacture the crosstube, part number (P/N) 212–320–103, which is also included as part of AAI Low Skid Gear Assembly Kits, P/N 412–320–500 and 412–320–502. The ASB specifies locating the serial number (S/N) of each crosstube, and replacing, within 25 hours time-in-service (TIS), each crosstube within the S/N range of AA–574 through AA–628, by following the replacement procedures contained in the Instructions for Continued Airworthiness AA–01136.

This unsafe condition is likely to exist or develop on other helicopters of these same type designs with an affected crosstube. Therefore, this AD is being issued to prevent failure of a crosstube and subsequent collapse of the landing gear. This AD requires, within 25 hours TIS, replacing any affected crosstube with an airworthy crosstube.

The short compliance time involved is required because the previously described critical unsafe condition can adversely affect the structural integrity of the helicopter. Therefore, replacing any affected crosstube with an airworthy crosstube is required within 25 hours TIS, and this AD must be issued immediately.

Since a situation exists that requires the immediate adoption of this regulation, it is found that notice and opportunity for prior public comment hereon are impracticable, and that good cause exists for making this amendment effective in less than 30 days.

We estimate that this AD will affect 19 helicopters, and replacing each affected crosstube will take about 5 work hours at an average labor rate of $85 per work hour. Required parts will cost about $4,925 per helicopter. Based on these figures, we estimate the total cost impact of the AD on U.S. operators to be $101,650.

Comments Invited

This AD is a final rule that involves requirements that affect flight safety and was not preceded by notice and an opportunity for public comment; however, we invite you to submit any written data, views, or arguments regarding this AD. Send your comments to an address listed under **ADDRESSES**. Include "Docket No. FAA–2010–0487; Directorate Identifier 2010–SW–032–AD" at the beginning of your comments. We specifically invite comments on the

overall regulatory, economic, environmental, and energy aspects of the AD. We will consider all comments received by the closing date and may amend the AD in light of those comments.

We will post all comments we receive, without change, to *http://www.regulations.gov,* including any personal information you provide. We will also post a report summarizing each substantive verbal contact with FAA personnel concerning this AD. Using the search function of our docket Web site, you can find and read the comments to any of our dockets, including the name of the individual who sent the comment. You may review the DOT's complete Privacy Act Statement in the **Federal Register** published on April 11, 2000 (65 FR 19477–78).

Regulatory Findings

We have determined that this AD will not have federalism implications under Executive Order 13132. This AD will not have a substantial direct effect on the States, on the relationship between the national Government and the States, or on the distribution of power and responsibilities among the various levels of government.

For the reasons discussed above, I certify that the regulation:

1. Is not a "significant regulatory action" under Executive Order 12866;
2. Is not a "significant rule" under the DOT Regulatory Policies and Procedures (44 FR 11032, February 26, 1979); and
3. Will not have a significant economic impact, positive or negative, on a substantial number of small entities under the criteria of the Regulatory Flexibility Act.

We prepared an economic evaluation of the estimated costs to comply with this AD. See the AD docket to examine the economic evaluation.

Authority for This Rulemaking

Title 49 of the United States Code specifies the FAA's authority to issue rules on aviation safety. Subtitle I, section 106, describes the authority of the FAA Administrator. Subtitle VII, Aviation Programs, describes in more detail the scope of the Agency's authority.

We are issuing this rulemaking under the authority described in subtitle VII, part A, subpart III, section 44701, "General requirements." Under that section, Congress charges the FAA with promoting safe flight of civil aircraft in air commerce by prescribing regulations for practices, methods, and procedures the Administrator finds necessary for safety in air commerce. This regulation is within the scope of that authority because it addresses an unsafe condition that is likely to exist or develop on products identified in this rulemaking action.

List of Subjects in 14 CFR Part 39

Air transportation, Aircraft, Aviation safety, Safety.

Adoption of the Amendment

■ Accordingly, pursuant to the authority delegated to me by the Administrator, the Federal Aviation Administration amends part 39 of the Federal Aviation Regulations (14 CFR part 39) as follows:

PART 39—AIRWORTHINESS DIRECTIVES

■ 1. The authority citation for part 39 continues to read as follows:

Authority: 49 U.S.C. 106(g), 40113, 44701.

§ 39.13 [Amended]

■ 2. Section 39.13 is amended by adding a new airworthiness directive to read as follows:

2010–10–16 Bell Helicopter Textron and Agusta S.P.A.: Amendment 39–16295. Docket No. FAA–2010–0487; Directorate Identifier 2010–SW–032–AD.

Applicability: Bell Helicopter Textron Model 205A, 205A–1, 205B, 212, 412, 412EP, and 412CF and Agusta S.p.A. Model AB412, AB412EP helicopters, certificated in any category, with Aeronautical Accessories, Inc. (AAI) Low Skid Landing Gear Forward Crosstube (Crosstube), part number (P/N) 212–320–103, with a serial number (S/N) prefix of "AA" and an S/N of 574 through 628, installed.

Note 1: Crosstube, P/N 212–320–103, is also included as part of AAI Low Skid Gear Assembly Kits, P/N 412–320–500 and 412–320–502.

Compliance: Required as indicated, unless done previously.

To prevent failure of a crosstube and subsequent collapse of the landing gear, do the following:

(a) Within 25 hours time-in-service, replace any affected crosstube with an airworthy crosstube.

Note 2: AAI Alert Service Bulletin No. AA–10012, dated March 5, 2010, references the AAI Instructions for Continued Airworthiness AA–01136, which contains guidance on replacing the crosstubes.

(b) To request a different method of compliance or a different compliance time for this AD, follow the procedures in 14 CFR 39.19. Contact the Manager, Rotorcraft Certification Office: ATTN: DOT/FAA Southwest Region, Martin R. Crane, ASW–170, Aviation Safety Engineer, Rotorcraft Directorate, Rotorcraft Certification Office, 2601 Meacham Blvd., Fort Worth, Texas 76137, telephone (817) 222–5170, fax (817) 222–5783, for information about previously approved alternative methods of compliance.

(c) The Joint Aircraft System/Component (JASC) Code is 3250: Landing Gear System.

(d) This amendment becomes effective on June 8, 2010.

Issued in Fort Worth, Texas, on May 3, 2010.

Mark R. Schilling,

Acting Manager, Rotorcraft Directorate.

[FR Doc. 2010–11424 Filed 5–21–10; 8:45 am]

BILLING CODE 4910–13–P

DEPARTMENT OF TRANSPORTATION

Federal Aviation Administration

14 CFR Part 73

[Docket No. FAA–2008–1261; Airspace Docket No. 06–ASO–18]

RIN 2120–AA66

Amendment and Establishment of Restricted Areas and Other Special Use Airspace, Avon Park Air Force Range, FL

AGENCY: Federal Aviation Administration (FAA), DOT.

ACTION: Final rule.

SUMMARY: This action restructures the special use airspace (SUA) at the Avon Park Air Force Range (APAFR), Florida. The changes provide additional restricted airspace needed for training in high altitude weapons releases and other hazardous activities, and reconfigure the military operations areas (MOA) to contain nonhazardous flight operations. These changes will permit realistic training in current tactics to be conducted at the Range and enable more efficient use of the National Airspace System.

DATES: Effective date 0901 UTC, July 29, 2010.

FOR FURTHER INFORMATION CONTACT: Paul Gallant, Airspace and Rules Group, Office of System Operations Airspace and AIM, Federal Aviation Administration, 800 Independence Avenue, SW., Washington, DC 20591; telephone: (202) 267–8783.

SUPPLEMENTARY INFORMATION:

Background

On Thursday, February 12, 2009, the FAA published in the **Federal Register** a notice of proposed rulemaking (NPRM) to restructure the SUA at the APAFR, Florida (74 FR 7018). Interested parties were invited to participate in this rulemaking proceeding by submitting written comments on the proposal to the FAA. Four responses were received.

Discussion of Comments

One commenter wrote that the APAFR should be eliminated in its

entirety due to a lack of observed activity at the Range. The commenter also stated that the NPRM did not propose any altitude restrictions or changes for the area.

The FAA does not agree. The airspace in this general area has been used for military purposes dating back to the 1940s and the range remains a crucial training resource today. The APAFR restricted areas are used for a variety of hazardous activities, many of which may not be readily apparent through observation. These activities include not only aircraft operations such as various attack profiles and air-to-ground weapons delivery, etc.; but also various non-aviation, ground-based activities including artillery, mortars, missiles, etc. The MOAs are used for nonhazardous flight operations that support range missions. A sampling of APAFR restricted area and MOA annual utilization data for Fiscal Year (FY) 2004 and FY 2009 shows significant use of the airspace. For example, in FY 2004, the Avon East MOA was used on 277 days with 8,618 aircraft sorties. In FY 2009, the same MOA was used on 280 days with 10,131 aircraft sorties. The restricted areas also saw extensive use, reflecting continuing, real-world training requirements. In FY 2004, R–2901A and C through I were used on 276 days with 8,581 aircraft sorties. The FY 2004 figures for R–2901B were 206 days and 3,415 aircraft sorties. In FY 2009, the figures for all R–2901 areas (A through I) grew to 280 days and 10,131 aircraft sorties. As described in more detail below, this action makes a number of airspace modifications at APAFR. All changes to APAFR SUA are contained within the current outer foot print of the range airspace with the existing SUA altitude floors remaining unchanged. New SUA is being added upward within that footprint but in layers so that only those sections of airspace needed for the mission will be activated. The Lake Placid MOA is subdivided into three sections to enable more efficient use of the airspace.

Another commenter stated that all military testing should be moved to an area of lower population density.

As stated above, military use of the APAFR area dates back to the 1940s. Over time, many military installations, including APAFR, have experienced growth of communities located near the installation which results in challenges to both the military mission and the surrounding community. The military is currently participating in the Avon Park Air Force Range Joint Land Use Study, sponsored by the Central Florida Regional Planning Council. This project is a cooperative land use planning effort between the military installation and surrounding communities to promote compatible community growth while supporting military training and operational missions. The goal of this study is to protect the health, safety and welfare of the local community with regard to military operations and to address development that may impact the mission of the APAFR.

Representatives of the Indian Hammock Airport (FL75), Fort Drum, FL, wrote with concerns about the proposed airspace changes. FL75 is a charted, private-use, uncontrolled airport located along the eastern edge of the Marian MOA. Airport users were concerned that extending the MOA operating hours to include weekends and nighttime would impact the airport's busiest periods and increase the risk of an accident. They noted that aircraft frequently pass under FL75's 800-foot traffic pattern and/or in close proximity to the airport. Airport representatives recommended that a plan be developed to avoid FL75, especially on weekends and at night. Additionally, they recommended that visual flight rules (VFR) corridors be developed and published for pilot transit through the northern and southern portions of R–2901.

The FAA has determined that VFR corridors through the APAFR complex are not feasible at this time. In response to the comments regarding impacts on airport operations, a representative from the APAFR met recently with FL75 representatives to discuss the U.S Air Force's Midair Collision Avoidance (MACA) Program, current Range operations and FL75's concerns, and to establish contacts for continuing discussions between FL75 and APAFR.

Representatives of the Destiny Project wrote to request that the Marian MOA be modified due to a development project planned in the area. Specifically, they asked that the minimum MOA flight altitude, within that section of the Marian MOA located in Osceola County, be raised from the current 500 feet above ground level (AGL), to 5,000 feet above mean sea level (MSL).

The Marian MOA was established in 1977. It is used primarily as a maneuvering and holding area for flights going into R–2901 and for periodic exercises. Since the Marian MOA currently extends from 500 feet AGL up to 5,000 feet MSL, raising the MOA floor to 5,000 feet MSL, as requested, would eliminate that part of the MOA that overlies Osceola County. The resulting reduction in available MOA airspace would leave insufficient room for holding and maneuvering, causing military aircraft to exit SUA when entering or departing the restricted areas and/or when maneuvering or holding prior to entering the restricted areas. This would defeat the purpose of a MOA, which is to contain non-hazardous military flying activities and to identify, for nonparticipating pilots, where that activity is being conducted. The NPRM proposed an administrative change to the Marian MOA description to update the name of the using agency and to add a "by NOTAM" provision to the MOA times of use to make them consistent with other APAFR SUA areas. No changes to the boundaries or altitude structure of the Marian MOA were proposed in the NPRM, therefore the requested MOA modification is outside the scope of this action. For the above reasons, the Marian MOA boundaries or altitudes will not be modified as part of this action.

Military Operations Areas (MOA)

MOAs are established to separate or segregate non-hazardous military flight activities from aircraft operating in accordance with instrument flight rules (IFR), and to advise pilots flying under VFR where these activities are conducted. IFR aircraft may be routed through an active MOA only by agreement with the using agency and only when air traffic control can provide approved separation from the MOA activity. VFR pilots are not restricted from flying in an active MOA, but are advised to exercise caution while doing so. As noted in the NPRM, MOAs are nonregulatory airspace areas that are established administratively and published in the National Flight Data Digest (NFDD) rather than through rulemaking procedures. When a nonrulemaking action is an integral part of a rulemaking action, FAA procedures allow for the nonrulemaking changes to be included in the rulemaking action. Since the MOAs are an integral part of the Avon Park Range airspace structure, the MOA changes are included in this rule as well as being published in the NFDD.

APAFR MOA Changes

This action subdivides the Lake Placid MOA, cancels the Avon North and Avon South MOAs, establishes the Avon East High MOA, amends some MOA times of use and updates the name of the using agency for all APAFR MOAs. Specifically, the Lake Placid MOA is subdivided into three parts: Lake Placid North, Lake Placid West and Lake Placid East. These charted subdivisions will simplify coordination with MOA users and will allow more efficient traffic flows for

nonparticipating aircraft when parts of the MOA are not in use by the military. The eastern boundary of the new Lake Placid North and Lake Placid West MOAs is adjusted to eliminate a slight overlap of the MOAs into restricted airspace. The times of use for the Lake Placid MOAs are amended to include a provision to allow for activation of the airspace at "other times by NOTAM" to be consistent with other APAFR SUA. The altitudes for the Lake Placid MOAs are not being changed and will remain as currently published: from 7,000 feet MSL to but not including FL 180.

The existing Avon North and Avon South MOAs, both of which extend upward from 5,000 feet MSL to but not including FL 180, are cancelled and the airspace converted into Restricted Areas R–2901M and R–2901N, respectively, as described in the rule section, below. A new MOA, designated Avon East High, is established directly above the existing Avon East MOA. The Avon East MOA currently extends from 500 feet AGL up to but not including 14,000 feet MSL. The new Avon East High MOA extends from 14,000 feet MSL to but not including FL 180.

The times of use for the Basinger and Marian MOAs are changed to add a provision to allow for activation of the airspace at "other times by NOTAM." This change aligns the Basinger and Marian MOA times of use with the other APAFR SUA areas.

The name of the using agency for all APAFR MOAs is changed to read "U.S. Air Force, Commander, 23rd Wing, Det. 1, MacDill AFB, FL," to reflect the current organizational title. Minor corrections were made to the boundary descriptions of the Avon East, Avon East High and Basinger MOAs. These corrections consist of more accurate latitude/longitude points that do not change the size or the charted depiction of the areas.

The APAFR MOA description changes are as follows:

Avon East MOA, FL [Amended]

By removing the current boundaries and using agency and substituting the following:

Boundaries. Beginning at lat. 27°44′46″ N., long. 81°11′39″ W.; to lat. 27°44′46″ N., long. 81°08′29″ W.; to lat. 27°34′01″ N., long. 81°04′29″ W.; to lat. 27°32′31″ N., long. 81°07′23″ W.; to lat. 27°35′01″ N., long. 81°08′59″ W.; to the point of beginning.

Using agency. U.S. Air Force, Commander, 23rd Wing, Det 1, MacDill AFB, FL.

Avon East High MOA, FL [New]

Boundaries. Beginning at lat. 27°44′46″ N., long. 81°11′39″ W.; to lat. 27°44′46″ N., long. 81°08′29″ W.; to lat. 27°34′01″ N., long. 81°04′29″ W.; to lat. 27°32′31″ N., long. 81°07′23″ W.; to lat. 27°35′01″ N., long. 81°08′59″ W.; to the point of beginning.

Altitudes. 14,000 feet MSL to but not including FL 180.

Times of use. Intermittent, normally daylight hours, Monday–Friday; other times by NOTAM.

Controlling agency. FAA, Miami ARTCC.

Using agency. U.S. Air Force, Commander, 23rd Wing, Det 1, MacDill AFB, FL.

Basinger MOA, FL [Amended]

By removing the current boundaries, times of use and using agency and substituting the following:

Boundaries. Beginning at lat. 27°32′31″ N., long. 81°07′23″ W.; to lat. 27°34′01″ N., long. 81°04′29″ W.; to lat. 27°23′16″ N., long. 80°56'59″ W.; to lat. 27°21′01″ N., long. 80°59′59″ W.; to lat. 27°29'31″ N., long. 81°05′29″ W.; to the point of beginning.

Times of use. Intermittent, normally daylight hours, Monday–Friday; occasionally Saturday and Sunday; other times by NOTAM.

Using agency. U.S. Air Force, Commander, 23rd Wing, Det 1, MacDill AFB, FL.

Lake Placid North MOA, FL [New]

Boundaries. Beginning at lat. 27°53′31″ N., long. 81°51′59″ W.; to lat. 28°00′01″ N., long. 81°20′59″ W.; to lat. 27°55′01″ N., long. 81°25′19″ W.; to lat. 27°42′49″ N., long. 81° 36′16″ W.; to lat. 27°35′44″ N., long. 81°42′14″ W.; to the point of beginning.

Altitudes. 7,000 feet MSL to but not including FL 180.

Times of use. Intermittent, normally daylight hours, Monday–Friday; occasionally on Saturday and Sunday; other times by NOTAM.

Controlling agency. FAA, Miami ARTCC.

Using agency. U.S. Air Force, Commander, 23rd Wing, Det 1, MacDill AFB, FL.

Lake Placid West MOA, FL [New]

Boundaries. Beginning at lat. 27°35′44″ N., long. 81°42′14″ W.; to lat. 27°42′49″ N., long. 81°36′16″ W.; to lat. 27°21′30″ N., long. 81°28′00″ W.; to lat. 27°04′01″ N., long. 81°16′59″ W.; to lat. 27°04′01″ N., long. 81°24′59″ W.; to the point of beginning.

Altitudes. 7,000 feet MSL to but not including FL 180.

Times of use. Intermittent, normally daylight hours, Monday–Friday; occasionally on Saturday and Sunday; other times by NOTAM.

Controlling agency. FAA, Miami ARTCC.

Using agency. U.S. Air Force, Commander, 23rd Wing, Det 1, MacDill AFB, FL.

Lake Placid East MOA, FL [New]

Boundaries. Beginning at lat. 27°42'49″ N., long. 81°36'16″ W.; to lat. 27°55′01″ N., long. 81°25′19″ W.; to lat. 27°42′01″ N., long. 81°25′19″ W.; to lat. 27°32′33″ N., long. 81°21′39″ W.; to lat. 27°30′46″ N., long. 81°17′49″ W.; to lat. 27°24′46″ N., long. 81°10′59″ W.; to lat. 27°15′03″ N., long. 81°04′54″ W.; to lat. 27°04′01″ N., long. 81°16′59″ W.; to lat. 27°21′30″ N., long. 81°28′00″ W.; to the point of beginning.

Altitudes. 7,000 feet MSL to but not including FL 180.

Times of use. Intermittent, normally daylight hours, Monday–Friday; occasionally on Saturday and Sunday; other times by NOTAM.

Controlling agency. FAA, Miami ARTCC.

Using agency. U.S. Air Force, Commander, 23rd Wing, Det 1, MacDill AFB, FL.

Marian MOA, FL [Amended]

By removing the times of use and current using agency and substituting the following:

Times of use. Intermittent, normally daylight hours, Monday–Friday; occasionally Saturday and Sunday; other times by NOTAM.

Using agency. U.S. Air Force, Commander, 23rd Wing, Det 1, MacDill AFB, FL.

The above MOA changes will also be published in the National Flight Data Digest.

The Rule

This action amends 14 CFR part 73 by restructuring the restricted airspace areas at the APAFR to enable training in various high-altitude tactics that are essential for combat readiness and are currently being used in actual combat operations. This action adds new restricted area subdivisions to raise the ceiling of restricted airspace at the Range to a maximum of FL 400. The current restricted area floors remain unchanged. As noted above, the Avon North and Avon South MOAs are cancelled and that airspace is converted to Restricted Areas R–2901M and R–2901N, respectively. This adds restricted airspace up to but not including 14,000 feet MSL in those parts of the Range. The lateral boundaries of R–2901B are expanded so that R–2901B overlies all other APAFR restricted areas that are designated below 14,000 feet MSL. Also, the ceiling of R–2901B is changed to read "to but not including FL 180." In order to provide the higher restricted airspace needed for training, three new restricted areas (R–2901J, R–2901K and R–2901L) are established above R–2901B. The new R–2901J directly overlies R–2901B and extends from FL 180 up to but not including FL 230. The new R–2901K overlies R–2901J and extends from FL 230 up to but not including FL 310. The new R–2901L overlies R–2901K and extends from FL 310 up to and including FL 400. This arrangement of layered restricted area subdivisions allows the airspace to be activated in segments, as needed, up to FL 400. Restricted area segments not required for the military mission can be released to Miami ARTCC for access by nonparticipating aircraft.

The name of the using agency for all APAFR restricted areas is changed to read "U.S. Air Force, Commander, 23rd Wing, Det 1, MacDill AFB, FL," to reflect the current organizational title.

The descriptions of restricted areas R–2901A, C, D, E, F, G, H and I include a minor change to the designated altitude descriptions by adding the

words "to but not including" before the ceiling altitude to prevent overlap with the floor of overlying restricted airspace. In addition, two points are added to the boundary descriptions of restricted areas R–2901B, J, K and L at the request of the National Aeronautical Charting Office. The additional two points fall along the existing boundary line and do not affect the size or charted depiction of the areas.

With the exception of editorial changes, and the changes described above, this amendment is the same as that proposed in the NPRM.

The FAA has determined that this regulation only involves an established body of technical regulations for which frequent and routine amendments are necessary to keep them operationally current. Therefore, this proposed regulation: (1) Is not a "significant regulatory action" under Executive Order 12866; (2) is not a "significant rule" under Department of Transportation (DOT) Regulatory Policies and Procedures (44 FR 11034; February 26, 1979); and (3) does not warrant preparation of a regulatory evaluation as the anticipated impact is so minimal. Since this is a routine matter that will only affect air traffic procedures and air navigation, it is certified that this rule, when promulgated, will not have a significant economic impact on a substantial number of small entities under the criteria of the Regulatory Flexibility Act.

The FAA's authority to issue rules regarding aviation safety is found in Title 49 of the United States Code. Subtitle I, section 106 describes the authority of the FAA Administrator. Subtitle VII, Aviation Programs, describes in more detail the scope of the agency's authority.

This rulemaking is promulgated under the authority described in subtitle VII, part A, subpart I, section 40103. Under that section, the FAA is charged with prescribing regulations to assign the use of the airspace necessary to ensure the safety of aircraft and the efficient use of airspace. This regulation is within the scope of that authority as it will restructure the SUA at the APAFR in Florida.

Environmental Review

The FAA has reviewed the Avon Park Air Force Range, FL, Special Use Airspace modifications and has determined that the project is categorically excluded from further environmental documentation in accordance with FAA Order 1050.1E, "Environmental Impacts: Policies and Procedures," Paragraph 311d. The implementation of this action will not result in any extraordinary circumstances in accordance with Order 1050.1E.

List of Subjects in 14 CFR Part 73

Airspace, Prohibited areas, Restricted areas.

Adoption of the Amendment

■ In consideration of the foregoing, the Federal Aviation Administration amends 14 CFR part 73 as follows:

PART 73—SPECIAL USE AIRSPACE

■ 1. The authority citation for part 73 continues to read as follows:

Authority: 49 U.S.C. 106(g), 40103, 40113, 40120; E.O. 10854, 24 FR 9565, 3 CFR, 1959–1963 Comp., p. 389.

§ 73.29 (Amended)

■ 2. § 73.29 is amended as follows:

* * * * *

R–2901A Avon Park, FL [Amended]

By removing the current designated altitudes and using agency and substituting the following:

Designated altitudes. Surface to but not including 14,000 feet MSL.

Using agency. U.S. Air Force, Commander, 23rd Wing, Det 1, MacDill AFB, FL

* * * * *

R–2901B Avon Park, FL [Revised]

Boundaries. Beginning at lat. 28°00′01″ N., long. 81°20′59″ W.; to lat. 28°00′01″ N., long. 81°13′59″ W.; to lat. 27°44′46″ N., long. 81°13′59″ W.; to lat. 27°44′46″ N., long. 81°11′39″ W.; to lat. 27°35′01″ N., long. 81°08′59″ W.; to lat. 27°32′31″ N., long. 81°07′29″ W.; to lat. 27°29′31″ N., long. 81°05′29″ W.; to lat. 27°21′01″ N., long. 80°59′59″ W.; to lat. 27°16′46″ N., long. 81°05′59″ W.; to lat. 27°24′46″ N., long. 81°10′59″ W.; to lat. 27°30′46″ N., long. 81°17′49″ W.; to lat. 27°32′33″ N., long. 81°21′39″ W.; to lat. 27°42′01″ N., long. 81°25′19″ W.; to lat. 27°55′01″ N., long. 81°25′19″ W.; to the point of beginning.

Designated altitudes. 14,000 feet MSL to but not including FL 180.

Time of designation. Intermittent, 0600–2400, Monday–Friday; 0800–1800, Saturday–Sunday; other times by NOTAM 6 hours in advance.

Controlling agency. FAA, Miami ARTCC.

Using agency. U.S. Air Force, Commander, 23rd Wing, Det 1, MacDill AFB, FL.

* * * * *

R–2901C Avon Park, FL [Amended]

By removing the current designated altitudes and using agency and substituting the following:

Designated altitudes. Surface to but not including 14,000 feet MSL.

Using agency. U.S. Air Force, Commander, 23rd Wing, Det 1, MacDill AFB, FL.

* * * * *

R–2901D Avon Park, FL [Amended]

By removing the current designated altitudes and using agency and substituting the following:

Designated altitudes. 500 feet MSL to but not including 4,000 feet MSL east of long. 81°21′00″ W.; 1,000 feet AGL to but not including 4,000 feet MSL west of long. 81°21′00″ W.

Using agency. U.S. Air Force, Commander, 23rd Wing, Det 1, MacDill AFB, FL.

* * * * *

R–2901E Avon Park, FL [Amended]

By removing the current designated altitudes and using agency and substituting the following:

Designated altitudes. 1,000 feet MSL to but not including 4,000 feet MSL.

Using agency. U.S. Air Force, Commander, 23rd Wing, Det 1, MacDill AFB, FL.

* * * * *

R–2901F Avon Park, FL [Amended]

By removing the current designated altitudes and substituting the following:

Designated altitudes. 4,000 feet MSL to but not including 5,000 feet MSL.

Using agency. U.S. Air Force, Commander, 23rd Wing, Det 1, MacDill AFB, FL.

* * * * *

R–2901G Avon Park, FL [Amended]

By removing the current designated altitudes and using agency and substituting the following:

Designated altitudes. Surface to but not including 5,000 feet MSL.

Using agency. U.S. Air Force, Commander, 23rd Wing, Det 1, MacDill AFB, FL.

* * * * *

R–2901H AvonPark, FL [Amended]

By removing the current designated altitudes and using agency and substituting the following:

Designated altitudes. 1,000 feet MSL to but not including 4,000 feet MSL.

Using agency. U.S. Air Force, Commander, 23rd Wing, Det 1, MacDill AFB, FL.

* * * * *

R–2901I AvonPark, FL [Amended]

By removing the current designated altitudes and using agency and substituting the following:

Designated altitudes. 1,500 feet MSL to but not including 4,000 feet MSL

Using agency. U.S. Air Force, Commander, 23rd Wing, Det 1, MacDill AFB, FL.

* * * * *

R–2901J, Avon Park, FL [New]

Boundaries. Beginning at lat. 28°00′01″ N., long. 81°20′59″ W.; to lat. 28°00′01″ N., long. 81°13′59″ W.; to lat. 27°44′46″ N., long. 81°13′59″ W.; to lat. 27°44′46″ N., long. 81°11′39″ W.; to lat. 27°35′01″ N., long. 81°08′59″ W.; to lat. 27°32′31″ N., long. 81°07′29″ W.; to lat. 27°29′31″ N., long. 81°05′29″ W.; to lat. 27°21′01″ N., long. 80°59′59″ W.; to lat. 27°16′46″ N., long. 81°05′59″ W.; to lat. 27°24′46″ N., long. 81°10′59″ W.; to lat. 27°30′46″ N., long. 81°17′49″ W.; to lat. 27°32′33″ N., long.

81°21′39″ W.; to lat. 27°42′01″ N., long. 81°25′19″ W.; to lat. 27°55′01″ N., long. 81°25′19″ W.; to the point of beginning.

Designated altitudes. FL 180 to but not including FL 230.

Time of designation. Intermittent, 0600–2400, Monday–Friday; 0800–1800, Saturday–Sunday; other times by NOTAM 6 hours in advance.

Controlling agency. FAA, Miami ARTCC.

Using agency. U.S. Air Force, Commander, 23rd Wing, Det 1, MacDill AFB, FL.

* * * * *

R–2901K Avon Park, FL [New]

Boundaries. Beginning at lat. 28°00′01″ N., long. 81°20′59″ W.; to lat. 28°00′01″ N., long. 81°13′59″ W.; to lat. 27°44′46″ N., long. 81°13′59″ W.; to lat. 27°44′46″ N., long. 81°11′39″ W.; to lat. 27°35′01″ N., long. 81°08′59″ W.; to lat. 27°32′31″ N., long. 81°07′29″ W.; to lat. 27°29′31″ N., long. 81°05′29″ W.; to lat. 27°21′01″ N., long. 80°59′59″ W.; to lat. 27°16′46″ N., long. 81°05′59″ W.; to lat. 27°24′46″ N., long. 81°10′59″ W.; to lat. 27°30′46″ N., long. 81°17′49″ W.; to lat. 27°32′33″ N., long. 81°21′39″ W.; to lat. 27°42′01″ N., long. 81°25′19″ W.; to lat. 27°55′01″ N., long. 81°25′19″ W.; to the point of beginning.

Designated altitudes. FL 230 to but not including FL 310.

Time of designation. Intermittent, 0600–2400, Monday–Friday; 0800–1800, Saturday–Sunday; other times by NOTAM 6 hours in advance.

Controlling agency. FAA, Miami ARTCC.

Using agency. U.S. Air Force, Commander, 23rd Wing, Det 1, MacDill AFB, FL.

* * * * *

R–2901L Avon Park, FL [New]

Boundaries. Beginning at lat. 28°00′01″ N., long. 81°20′59″ W.; to lat. 28°00′01″ N., long. 81°13′59″ W.; to lat. 27°44′46″ N., long. 81°13′59″ W.; to lat. 27°44′46″ N., long. 81°11′39″ W.; to lat. 27°35′01″ N., long. 81°08′59″ W.; to lat. 27°32′31″ N., long. 81°07′29″ W.; to lat. 27°29′31″ N., long. 81°05′29″ W.; to lat. 27°21′01″ N., long. 80°59′59″ W.; to lat. 27°16′46″ N., long. 81°05′59″ W.; to lat. 27°24′46″ N., long. 81°10′59″ W.; to lat. 27°30′46″ N., long. 81°17′49″ W.; to lat. 27°32′33″ N., long. 81°21′39″ W.; to lat. 27°42′01″ N., long. 81°25′19″ W.; to lat. 27°55′01″ N., long. 81°25′19″ W.; to the point of beginning.

Designated altitudes. FL 310 to FL 400.

Time of designation. Intermittent, 0600–2400, Monday–Friday; 0800–1800, Saturday–Sunday; other times by NOTAM 6 hours in advance.

Controlling agency. FAA, Miami ARTCC.

Using agency. U.S. Air Force, Commander, 23rd Wing, Det 1, MacDill AFB, FL.

* * * * *

R–2901M Avon Park, FL [New]

Boundaries. Beginning at lat. 28°00′01″ N., long. 81°20′59″ W.; to lat. 28°00′01″ N., long. 81°13′59″ W.; to lat. 27°48′31″ N., long. 81°13′59″ W.; thence west along Florida State Routes 60 and 630 to lat. 27°46′01″ N., long. 81°25′19″ W.; to lat. 27°55′01″ N., long. 81°25′19″ W.; to the point of beginning.

Designated altitudes. 4,000 feet MSL to but not including 14,000 feet MSL.

Time of designation. Intermittent, 0600–2400, Monday–Friday; 0800–1800, Saturday–Sunday; other times by NOTAM 6 hours in advance.

Controlling agency. FAA, Miami ARTCC.

Using agency. U.S. Air Force, Commander, 23rd Wing, Det 1, MacDill AFB, FL.

* * * * *

R–2901N Avon Park, FL [New]

Boundaries. Beginning at lat. 27°32′33″ N., long. 81°21′39″ W.; to lat. 27°32′37″ N., long. 81°16′46″ W.; to lat. 27°29′01″ N., long. 81°13′29″ W.; to lat. 27°32′31″ N., long. 81°07′29″ W.; to lat. 27°29′31″ N., long. 81°05′29″ W.; to lat. 27°21′01″ N., long. 80°59′59″ W.; to lat. 27°16′46″ N., long. 81°05′59″ W.; to lat. 27°24′46″ N., long. 81°10′59″ W.; to lat. 27°30′46″ N., long. 81°17′49″ W.; to the point of beginning.

Designated altitudes. 5,000 feet MSL to but not including 14,000 feet MSL north of a line from lat. 27°24′46″ N., long. 81°10′59″ W.; to lat. 27°29′31″ N., long. 81°05′29″ W.; 4,000 feet MSL to but not including 14,000 feet MSL south of that line.

Time of designation. Intermittent, 0600–2400, Monday–Friday; 0800–1800, Saturday–Sunday; other times by NOTAM 6 hours in advance.

Controlling agency. FAA, Miami ARTCC.

Using agency. U.S. Air Force, Commander, 23rd Wing, Det 1, MacDill AFB, FL.

Issued in Washington, DC, on May 18, 2010.

Edith V. Parish,

Manager, Airspace & Rules Group.

[FR Doc. 2010–12409 Filed 5–21–10; 8:45 am]

BILLING CODE 4910–13–P

DEPARTMENT OF TRANSPORTATION

Federal Aviation Administration

14 CFR Part 73

[Docket No. FAA–2010–0471; Airspace Docket No. 10–AWP–7]

RIN 2120–AA66

Amendment of Restricted Area R–2502A; Fort Irwin, CA

AGENCY: Federal Aviation Administration (FAA), DOT.

ACTION: Final rule.

SUMMARY: This action changes the controlling agency of Restricted Area R–2502A, Fort Irwin, CA, from "FAA, Hi-Desert TRACON, Edwards, CA" to "FAA, Los Angeles ARTCC." The FAA is taking this action in response to an administrative change of responsibility for the restricted area. This action does not change any boundaries, times of designation, or activities conducted in the restricted airspace area.

DATES: Effective date 0901 UTC, July 29, 2010.

FOR FURTHER INFORMATION CONTACT: Ken McElroy, Airspace and Rules Group, Office of System Operations Airspace and AIM, Federal Aviation Administration, 800 Independence Avenue, SW., Washington, DC 20591; telephone: (202) 267–8783.

SUPPLEMENTARY INFORMATION:

The Rule

This action amends Title 14 Code of Federal Regulations (14 CFR) part 73 by changing the controlling agency for R–2502A from "FAA, Hi-Desert TRACON, Edwards, CA" to "FAA, Los Angeles ARTCC." This is an administrative change and does not affect the boundaries, designated altitudes, or activities conducted within the restricted area, therefore, notice and public procedures under 5 U.S.C. 553(b) is unnecessary.

The FAA has determined that this regulation only involves an established body of technical regulations for which frequent and routine amendments are necessary to keep them operationally current. Therefore, this regulation: (1) Is not a "significant regulatory action" under Executive Order 12866; (2) is not a "significant rule" under Department of Transportation (DOT) Regulatory Policies and Procedures (44 FR 11034; February 26, 1979); and (3) does not warrant preparation of a regulatory evaluation as the anticipated impact is so minimal. Since this is a routine matter that will only affect air traffic procedures and air navigation, it is certified that this rule, when promulgated, will not have a significant economic impact on a substantial number of small entities under the criteria of the Regulatory Flexibility Act.

The FAA's authority to issue rules regarding aviation safety is found in Title 49 of the United States Code. Subtitle I, section 106 describes the authority of the FAA Administrator. Subtitle VII, Aviation Programs, describes in more detail the scope of the agency's authority.

This rulemaking is promulgated under the authority described in subtitle VII, part A, subpart I, section 40103. Under that section, the FAA is charged with prescribing regulations to assign the use of the airspace necessary to ensure the safety of aircraft and the efficient use of airspace. This regulation is within the scope of that authority as it amends a restricted area in California.

Environmental Review

The FAA has determined that this action qualifies for categorical exclusion under the National Environmental Policy Act in accordance with 311d, FAA Order 1050.1E, "Environmental

Impacts: Policies and Procedures." This airspace action is not expected to cause any potentially significant environmental impacts, and no extraordinary circumstances exist that warrant preparation of an environmental assessment.

List of Subjects in 14 CFR Part 73

Airspace, Prohibited areas, Restricted areas.

Adoption of the Amendment

■ In consideration of the foregoing, the Federal Aviation Administration amends 14 CFR part 73 as follows:

PART 73—SPECIAL USE AIRSPACE

■ 1. The authority citation for part 73 continues to read as follows:

Authority: 49 U.S.C. 106(g), 40103, 40113, 40120; E.O. 10854, 24 FR 9565, 3 CFR, 1959–1963 Comp., p. 389.

§ 73.25 [Amended]

■ 2. § 73.25 is amended as follows:

* * * * *

R–2502A Fort Irwin, CA [Amended]

Under Controlling agency, remove the words "FAA, Hi-Desert TRACON, Edwards, CA" and insert the words "FAA, Los Angeles ARTCC."

Issued in Washington, DC, May 18, 2010.

Edith V. Parish,

Manager, Airspace and Rules Group.

[FR Doc. 2010–12415 Filed 5–21–10; 8:45 am]

BILLING CODE 4910–13–P

DEPARTMENT OF HOMELAND SECURITY

Coast Guard

33 CFR Part 117

[USCG–2010–0325]

Drawbridge Operation Regulation; Long Island, New York Inland Waterway From East Rockaway Inlet to Shinnecock Canal, Hempstead, NY, Maintenance

AGENCY: Coast Guard, DHS.

ACTION: Notice of temporary deviation from regulations.

SUMMARY: The Commander, First Coast Guard District, has issued a temporary deviation from the regulation governing the operation of the Wantagh State Parkway Bridge across Sloop Channel at mile 15.4, at Jones Beach, New York. Under this temporary deviation the bridge may operate on a special operating schedule for five months to facilitate the completion of new bridge construction.

DATES: This deviation is effective from May 15, 2010 through October 30, 2010.

ADDRESSES: Documents mentioned in this preamble as being available in the docket are part of docket USCG–2010–0325 and are available online at *http://www.regulations.gov*, inserting USCG–2010–0325 in the "Keyword" and then clicking "Search". They are also available for inspection or copying at the Docket Management Facility (M–30), U.S. Department of Transportation, West Building Ground Floor, Room W12–140, 1200 New Jersey Avenue, SE., Washington, DC 20590, between 9 a.m. and 5 p.m., Monday through Friday, except Federal holidays.

FOR FURTHER INFORMATION CONTACT: If you have questions on this rule, call or e-mail Ms. Judy Leung-Yee, Project Officer, First Coast Guard District, telephone (212) 668–7165. If you have questions on viewing the docket, call Renee V. Wright, Program Manager, Docket Operations, telephone 202–366–9826.

SUPPLEMENTARY INFORMATION: The Wantagh State Parkway Bridge has a vertical clearance in the closed position of 20 feet at mean high water and 23 at mean low water. The existing drawbridge operation regulations are listed at 33 CFR 117.5.

The New York State Department of Transportation, requested a temporary deviation for the existing bridge to operate on special schedule to facilitate the completion of the new bridge construction.

The waterway has seasonal recreational vessels of various sizes.

We contacted the New York Marine Trades Association, South Bay Cruising Club, and Sector Long Island Sound. No objection to the proposed temporary deviation schedule was received.

Under this temporary deviation, in effect from May 15, 2010 through October 30, 2010, the Wantagh State Parkway Bridge at mile 15.4, across Sloop Channel, at Jones Beach, New York, shall operate as follows: The draw shall open on signal after at least a half-hour advance notice is given by calling the number posted at the bridge. From 6:30 a.m. through 12 noon and from 12:15 p.m. through 4 p.m., Monday through Friday, one bascule lift span may remain in the closed position. A full two lift span opening shall be given between 12 noon and 12:15 p.m. provided at least a one-hour advance notice is given by calling the number posted at the bridge.

From 7:30 a.m. through 8:30 p.m. on Saturday, Sunday and Federal holidays the draw shall open on the hour and half-hour provided at least a half-hour advance notice is given by calling the number posted at the bridge.

In accordance with 33 CFR 117.35(e), the bridge must return to its regular operating schedule immediately at the end of the designated time period. This deviation from the operating regulations is authorized under 33 CFR 117.35.

Dated: May 7, 2010.

Gary Kassof,

Bridge Program Manager, First Coast Guard District.

[FR Doc. 2010–12342 Filed 5–21–10; 8:45 am]

BILLING CODE 9110–04–P

DEPARTMENT OF HOMELAND SECURITY

Coast Guard

33 CFR Part 165

[Docket No. USCG–2010–0405]

RIN 1625–AA87

Security Zone; Potomac River, Washington Channel, Washington, DC

AGENCY: Coast Guard, DHS.

ACTION: Temporary final rule.

SUMMARY: The Coast Guard is establishing a temporary security zone in certain waters of Washington Channel on the Potomac River. The security zone is necessary to provide for the security and safety of life and property of event participants, spectators and mariners during the U.S. Coast Guard Vice Commandant's Change of Watch ceremony from 6 a.m. through 5 p.m. on May 24, 2010. Entry into this zone is prohibited unless authorized by the Captain of the Port, Baltimore, Maryland, or his designated representative.

DATES: This rule is effective from 6 a.m. through 5 p.m. on May 24, 2010.

ADDRESSES: Documents indicated in this preamble as being available in the docket are part of docket USCG–2010–0405 and are available online by going to *http://www.regulations.gov,* inserting USCG–2010–0405 in the "Keyword" box, and then clicking "Search." They are also available for inspection or copying at the Docket Management Facility (M–30), U.S. Department of Transportation, West Building Ground Floor, Room W12–140, 1200 New Jersey Avenue, SE., Washington, DC 20590, between 9 a.m. and 5 p.m., Monday through Friday, except Federal holidays.

FOR FURTHER INFORMATION CONTACT: If you have questions on this temporary

rule, call or e-mail Mr. Ronald L. Houck, Sector Baltimore Waterways Management Division, Coast Guard; telephone 410–576–2674, e-mail *Ronald.L.Houck@uscg.mil.* If you have questions on viewing the docket, call Renee V. Wright, Program Manager, Docket Operations, telephone 202–366–9826.

SUPPLEMENTARY INFORMATION:

Regulatory Information

The Coast Guard is issuing this temporary final rule without prior notice and opportunity to comment pursuant to authority under section 4(a) of the Administrative Procedure Act (APA) (5 U.S.C. 553(b)). This provision authorizes an agency to issue a rule without prior notice and opportunity to comment when the agency for good cause finds that those procedures are "impracticable, unnecessary, or contrary to the public interest." Under 5 U.S.C. 553(b)(B), the Coast Guard finds that good cause exists for not publishing a notice of proposed rulemaking (NPRM) with respect to this rule because it is contrary to public interest to delay the effective date of this rule. The Coast Guard is establishing this security zone to protect high-ranking government officials, mitigate potential terrorist acts, and enhance public and maritime safety and security. The Coast Guard was unable to publish a NPRM due to the short time period between event planners notifying the Captain of the Port Baltimore of the security needs during the event and the publication of this security zone. Furthermore, delaying the effective date would be contrary to the security zone's intended objectives of protecting high-ranking government officials, mitigating potential terrorist acts and enhancing public and maritime safety security.

Under 5 U.S.C. 553(d)(3), the Coast Guard finds that good cause exists for making this rule effective less than 30 days after publication in the **Federal Register**. Due to the need for immediate action, the restriction of vessel traffic is necessary to protect life, property and the environment, therefore, a 30-day notice period is impracticable. Delaying the effective date would be contrary to the security zone's intended objectives of protecting high-ranking government officials, mitigating potential terrorist acts and enhancing public and maritime safety and security.

Basis and Purpose

The Coast Guard will conduct a ceremony at Fort McNair in Washington, DC on Monday, May 24, 2010. To address security concerns during the event, the Captain of the Port Baltimore, Maryland is establishing a security zone upon certain waters of the Washington Channel. This security zone will help the Coast Guard to prevent vessels or persons from engaging in waterborne terrorist actions during the U.S. Coast Guard Vice Commandant's Change of Watch ceremony. Due to the catastrophic impact a terrorist attack during the ceremony would have against the large number of dignitaries, and the surrounding area and communities, a security zone is prudent for this type of event.

Discussion of Rule

Through this regulation, the Coast Guard will establish a security zone. The security zone will be in effect from 6 a.m. through 5 p.m. on May 24, 2010. The security zone will include all navigable waters of the Washington Channel, from shoreline to shoreline, bounded on the north along latitude 38°52′03″ N and bounded on the south along latitude 38°51′50″ N (North American Datum 1983). This location is entirely within the Area of Responsibility of the Captain of the Port Baltimore, as set forth at 33 CFR 3.25–15.

Vessels underway at the time this security zone is implemented would be required to immediately proceed out of the zone. Vessels already at berth, mooring, or anchor at the time the security zone is implemented do not have to depart the security zone. Entry into this zone is prohibited unless authorized by the Captain of the Port or his designated representative. To seek permission to transit the area, the Captain of the Port Baltimore can be contacted at telephone number 410–576–2693 or on Marine Band Radio, VHF–FM channel 16 (156.8 MHz). Coast Guard vessels enforcing this section can be contacted on Marine Band Radio, VHF–FM channel 16 (156.8 MHz). The Captain of the Port will issue Broadcast Notices to Mariners to publicize the security zone and notify the public of changes in the status of the zone. Such notices will continue until the ceremony is complete.

Regulatory Analyses

We developed this rule after considering numerous statutes and executive orders related to rulemaking. Below we summarize our analyses based on 13 of these statutes or executive orders.

Regulatory Planning and Review

This rule is not a significant regulatory action under section 3(f) of Executive Order 12866, Regulatory Planning and Review, and does not require an assessment of potential costs and benefits under section 6(a)(3) of that Order. The Office of Management and Budget has not reviewed it under that Order. Although this security zone restricts vessel traffic through the affected area, vessels may seek permission from the Captain of the Port Baltimore to enter and transit the zone. Furthermore, the effect of this regulation will not be significant due to the limited size and duration that the regulated area will be in effect. In addition, notifications will be made to the maritime community via marine information broadcasts so mariners may adjust their plans accordingly.

Small Entities

Under the Regulatory Flexibility Act (5 U.S.C. 601–612), we have considered whether this rule would have a significant economic impact on a substantial number of small entities. The term "small entities" comprises small businesses, not-for-profit organizations that are independently owned and operated and are not dominant in their fields, and governmental jurisdictions with populations of less than 50,000.

The Coast Guard certifies under 5 U.S.C. 605(b) that this rule will not have a significant economic impact on a substantial number of small entities. This rule will affect the following entities, some of which may be small entities: the owners or operators of vessels intending to operate or transit through or within the security zone during the enforcement period. The security zone will not have a significant economic impact on a substantial number of small entities for the following reasons. The security zone is of limited size and duration. Although the security zone will apply to the entire width of the channel, maritime advisories will be widely available to the maritime community before the effective period.

Assistance for Small Entities

Under section 213(a) of the Small Business Regulatory Enforcement Fairness Act of 1996 (Pub. L. 104–121), we offer to assist small entities in understanding the rule so that they can better evaluate its effects on them and participate in the rulemaking process.

Small businesses may send comments on the actions of Federal employees who enforce, or otherwise determine compliance with, Federal regulations to the Small Business and Agriculture Regulatory Enforcement Ombudsman and the Regional Small Business Regulatory Fairness Boards. The Ombudsman evaluates these actions

annually and rates each agency's responsiveness to small business. If you wish to comment on actions by employees of the Coast Guard, call 1–888–REG–FAIR (1–888–734–3247). The Coast Guard will not retaliate against small entities that question or complain about this rule or any policy or action of the Coast Guard.

Collection of Information

This rule calls for no new collection of information under the Paperwork Reduction Act of 1995 (44 U.S.C. 3501–3520).

Federalism

A rule has implications for federalism under Executive Order 13132, Federalism, if it has a substantial direct effect on State or local governments and would either preempt State law or impose a substantial direct cost of compliance on them. We have analyzed this rule under that Order and have determined that it does not have implications for federalism.

Unfunded Mandates Reform Act

The Unfunded Mandates Reform Act of 1995 (2 U.S.C. 1531–1538) requires Federal agencies to assess the effects of their discretionary regulatory actions. In particular, the Act addresses actions that may result in the expenditure by a State, local, or Tribal government, in the aggregate, or by the private sector of $100,000,000 (adjusted for inflation) or more in any one year. Though this rule will not result in such an expenditure, we do discuss the effects of this rule elsewhere in this preamble.

Taking of Private Property

This rule will not cause a taking of private property or otherwise have taking implications under Executive Order 12630, Governmental Actions and Interference with Constitutionally Protected Property Rights.

Civil Justice Reform

This rule meets applicable standards in sections 3(a) and 3(b)(2) of Executive Order 12988, Civil Justice Reform, to minimize litigation, eliminate ambiguity, and reduce burden.

Protection of Children

We have analyzed this rule under Executive Order 13045, Protection of Children from Environmental Health Risks and Safety Risks. This rule is not an economically significant rule and does not create an environmental risk to health or risk to safety that may disproportionately affect children.

Indian Tribal Governments

This rule does not have Tribal implications under Executive Order 13175, Consultation and Coordination with Indian Tribal Governments, because it does not have a substantial direct effect on one or more Indian Tribes, on the relationship between the Federal Government and Indian Tribes, or on the distribution of power and responsibilities between the Federal Government and Indian Tribes.

Energy Effects

We have analyzed this rule under Executive Order 13211, Actions Concerning Regulations That Significantly Affect Energy Supply, Distribution, or Use. We have determined that it is not a "significant energy action" under that order because it is not a "significant regulatory action" under Executive Order 12866 and is not likely to have a significant adverse effect on the supply, distribution, or use of energy. The Administrator of the Office of Information and Regulatory Affairs has not designated it as a significant energy action. Therefore, it does not require a Statement of Energy Effects under Executive Order 13211.

Technical Standards

The National Technology Transfer and Advancement Act (NTTAA) (15 U.S.C. 272 note) directs agencies to use voluntary consensus standards in their regulatory activities unless the agency provides Congress, through the Office of Management and Budget, with an explanation of why using these standards would be inconsistent with applicable law or otherwise impractical. Voluntary consensus standards are technical standards (*e.g.,* specifications of materials, performance, design, or operation; test methods; sampling procedures; and related management systems practices) that are developed or adopted by voluntary consensus standards bodies.

This rule does not use technical standards. Therefore, we did not consider the use of voluntary consensus standards.

Environment

We have analyzed this rule under Department of Homeland Security Management Directive 023–01 and Commandant Instruction M16475.lD, which guide the Coast Guard in complying with the National Environmental Policy Act of 1969 (NEPA) (42 U.S.C. 4321–4370f), and have concluded this action is one of a category of actions that do not individually or cumulatively have a significant effect on the human environment. This rule is categorically excluded, under figure 2–1, paragraph (34)(g), of the Instruction. This rule involves establishing a temporary security zone.

An environmental analysis checklist and a categorical exclusion determination are available in the docket where indicated under **ADDRESSES**.

List of Subjects in 33 CFR Part 165

Harbors, Marine safety, Navigation (water), Reporting and recordkeeping requirements, Security measures, Waterways.

■ For the reasons discussed in the preamble, the Coast Guard amends 33 CFR part 165 as follows:

PART 165—REGULATED NAVIGATION AREAS AND LIMITED ACCESS AREAS

■ 1. The authority citation for part 165 continues to read as follows:

Authority: 33 U.S.C. 1226, 1231; 46 U.S.C. Chapter 701, 3306, 3703; 50 U.S.C. 191, 195; 33 CFR 1.05–1, 6.04–1, 6.04–6, and 160.5; Pub. L. 107–295, 116 Stat. 2064; Department of Homeland Security Delegation No. 0170.1.

■ 2. Add § 165.T05–0405 to read as follows:

§ 165.T05–0405 Security Zone; Potomac River, Washington Channel, Washington, DC.

(a) *Location.* The following area is a security zone: all waters of the Washington Channel, from shoreline to shoreline, bounded on the north along latitude 38°52′03″ N and bounded on the south along latitude 38°51′50″ N (North American Datum 1983).

(b) *Definitions.* As used in this section:

Captain of the Port Baltimore means the Commander, U.S. Coast Guard Sector Baltimore, Maryland.

Designated representative means any Coast Guard commissioned, warrant, or petty officer who has been authorized by the Captain of the Port Baltimore to assist in enforcing the security zone described in paragraph (a) of this section.

(c) *Regulations.* (1) The general security zone regulations found in 33 CFR 165.33 apply to the security zone created by this temporary section, § 165.T05.0405.

(2) Entry into or remaining in this zone is prohibited unless authorized by the Coast Guard Captain of the Port Baltimore. Vessels already at berth, mooring, or anchor at the time the security zone is implemented do not have to depart the security zone. All vessels underway within this security zone at the time it is implemented are to depart the zone.

(3) Persons desiring to transit the area of the security zone must first request authorization from the Captain of the Port Baltimore or his designated representative. To seek permission to transit the area, the Captain of the Port Baltimore and his designated representatives can be contacted at telephone number 410–576–2693 or on Marine Band Radio, VHF–FM channel 16 (156.8 MHz). The Coast Guard vessels enforcing this section can be contacted on Marine Band Radio, VHF–FM channel 16 (156.8 MHz). Upon being hailed by a U.S. Coast Guard vessel, or other Federal, State, or local agency vessel, by siren, radio, flashing lights, or other means, the operator of a vessel shall proceed as directed. If permission is granted, all persons and vessels must comply with the instructions of the Captain of the Port Baltimore or his designated representative and proceed at the minimum speed necessary to maintain a safe course while within the zone.

(4) *Enforcement.* The U.S. Coast Guard may be assisted in the patrol and enforcement of the zone by Federal, State, and local agencies.

(d) *Enforcement period.* This section will be enforced from 6 a.m. through 5 p.m. on May 24, 2010.

Dated: May 11, 2010.

Mark P. O'Malley,

Captain, U.S. Coast Guard, Captain of the Port Baltimore Maryland.

[FR Doc. 2010–12341 Filed 5–21–10; 8:45 am]

BILLING CODE 9110–04–P

DEPARTMENT OF COMMERCE

National Oceanic and Atmospheric Administration

50 CFR Part 622

[Docket No. 090225243–0170–03]

RIN 0648–AX67

Fisheries of the Caribbean, Gulf of Mexico, and South Atlantic; Reef Fish Fishery of the Gulf of Mexico; Amendment 31; Correction

AGENCY: National Marine Fisheries Service (NMFS), National Oceanic and Atmospheric Administration (NOAA), Commerce.

ACTION: Final rule; correction.

SUMMARY: This document contains a correction to the final rule to implement Amendment 31 to the Fishery Management Plan for the Reef Fish Resources of the Gulf of Mexico that was published in the **Federal Register** Monday, April 26, 2010.

DATES: This correction is effective May 26, 2010.

FOR FURTHER INFORMATION CONTACT: Scott Sandorf, 727–824–5305; fax: 727–824–5308; e-mail: *scott.sandorf@noaa.gov*.

SUPPLEMENTARY INFORMATION:

Need for Correction

On April 26, 2010, (75 FR 21520, April 26, 2010) an incorrect coordinate for Point G, in § 622.34 (q) was published and this document corrects that coordinate.

1. On page 21520, in the third column, under § 622.34 (q), the Point G coordinate is corrected to read as follows:

§ 622.34 Gulf EEZ seasonal and/or area closures.

* * * * *

(q) * * *

Point	North lat.	West long.
* *	* *	*
G	26°48.80′	83°40.00′
* *	* *	*

* * * * *

Dated: May 18, 2010

Eric C. Schwaab,

Assistant Administrator For Fisheries, National Marine Fisheries Service.

[FR Doc. 2010–12383 Filed 5–21–10; 8:45 am]

BILLING CODE 3510–22–S

DEPARTMENT OF COMMERCE

National Oceanic and Atmospheric Administration

50 CFR Part 622

[Docket No. 100121040–0177–01]

RIN 0648–AY58

Fisheries of the Caribbean, Gulf of Mexico, and South Atlantic; Shrimp Fishery of the Gulf of Mexico and South Atlantic; Revisions To Allowable Bycatch Reduction Devices

AGENCY: National Marine Fisheries Service (NMFS), National Oceanic and Atmospheric Administration (NOAA), Commerce.

ACTION: Final rule.

SUMMARY: In accordance with the framework procedures for adjusting management measures of the Fishery Management Plan for the Shrimp Fishery of the Gulf of Mexico (Gulf FMP) and the Fishery Management Plan for the Shrimp Fishery of the South Atlantic region (South Atlantic FMP) NMFS provisionally recertifies two bycatch reduction devices (BRDs) and revises the construction and installation requirements of one of these BRD designs in the southeastern shrimp fishery. The intended effect of this rule is to improve bycatch reduction in the shrimp fishery and better meet the requirements of National Standard 9.

DATES: This rule is effective June 23, 2010.

ADDRESSES: Copies of supporting documentation for this final rule, which includes a regulatory impact review and a regulatory flexibility act analysis may be obtained from Steve Branstetter, Southeast Regional Office, NMFS, 263 13th Avenue South, St. Petersburg, FL 33701–5505.

FOR FURTHER INFORMATION CONTACT: Steve Branstetter, telephone: 727–824–5305.

SUPPLEMENTARY INFORMATION: The fishery for shrimp in the exclusive economic zone (EEZ) of the Gulf is managed under the FMP prepared by the Gulf of Mexico Fishery Management Council. The fishery for shrimp in the EEZ of the South Atlantic is managed under the FMP prepared by the South Atlantic Fishery Management Council. The FMPs are implemented under the authority of the Magnuson-Stevens Fishery Conservation and Management Act (Magnuson-Stevens Act) by regulations at 50 CFR part 622.

Background

Regulations implementing Amendment 2 to the South Atlantic Shrimp FMP (73 FR 18536, April 16, 1997) established BRD requirements in the South Atlantic EEZ. The rule established a certification criterion, descriptions of BRD designs and configurations allowed for use in the South Atlantic shrimp fishery, as well as procedures to develop and test new BRDs for certification.

Regulations implementing Amendment 9 to the Gulf Shrimp FMP were published April 14, 1998 (63 FR 18139), and established a requirement, with limited exceptions, for the use of certified BRDs in shrimp trawls towed in the Gulf EEZ shoreward of the 100-fm (183-m) depth contour west of 85° 30′ W. longitude (western Gulf), the approximate longitude of Cape San Blas, FL. The rule established descriptions of BRD designs and configurations allowed for use in the western Gulf shrimp fishery.

To better address the requirements of National Standard 9 of the Magnuson-Stevens Act, regulations implementing Amendment 10 to the Gulf FMP (69 FR 1538, January 9, 2004) required BRDs in shrimp trawls fished in the EEZ east of 85° 30′ W. longitude (eastern Gulf).

In accordance with the BRD framework procedures of the Gulf FMP, NMFS recently modified the existing BRD certification criterion for the western Gulf (73 FR 8219, February 13, 2008) to be consistent with the criterion for the eastern Gulf and South Atlantic. The new standardized certification criterion for the Gulf of Mexico and the South Atlantic specifies data must demonstrate a BRD achieves a 30-percent reduction in the weight of finfish bycatch to be certified for use in the southeastern shrimp fishery. In addition, this rule established a provisional certification criterion. To be provisionally certified, on a time-limited basis, the data must demonstrate that there is at least a 50-percent probability that the BRD reduces the weight of finfish bycatch by 25 percent.

In accordance with these new criteria, NMFS provisionally certified the Extended Funnel BRD for use in the Gulf of Mexico, and the Composite Panel BRD for use in both the Gulf of Mexico and the South Atlantic. By regulation, the provisional certification of both BRDs automatically expired on February 16, 2010. However, no new information exists regarding the effectiveness of these BRDs as they are used in the fisheries that would indicate if the BRDs have been improved, or that they do not continue to meet the provisional certification requirement. Collection of new data and sufficient industry-level evaluation of these BRDs was hindered, in part, because of delays in getting compatible regulations allowing their use in state waters off Texas and state waters off both the Gulf of Mexico and South Atlantic coasts of Florida. Texas developed compatible regulations allowing the use of these two BRDs in November 2008; Florida in December 2009. Thus, fishermen in these states have not had the opportunity to use these new BRDs or to make improvements to them. In addition, net shops that would be manufacturing these BRDs needed to wait on the final regulatory specifications before they could begin producing the BRDs, thus there was an initial shortage of these BRDs.

Therefore, to address the expiration of the initial provisional certification of these two BRDs and allow for sufficient evaluation of these designs by industry, on April 20, 2010, NMFS published a proposed rule (75 FR 20548) to provisionally recertify the extended funnel BRD and the composite panel BRD and revise the construction and installation requirements of the composite panel BRD design in the southeastern shrimp fishery.

Because no new information exists to decertify these BRDs, and because of the limited time fishermen in two major shrimping states have had to evaluate these BRDs, this final rule renews the provisional certification for these two BRD types for an additional two years through May 24, 2012. This final rule also revises the construction and installation requirements for the Composite Panel BRD in order to provide more flexibility for what material and size mesh may be used to construct this particular BRD design. The intended effect of this rule is to maintain adequate bycatch reduction in the shrimp fishery and better meet the requirements of National Standard 9.

NMFS received no comments on the proposed rule and, therefore, no changes have been made in this final rule.

Classification

The Administrator, Southeast Region, NMFS, determined that this final rule is necessary for the conservation and management of the southeastern shrimp fishery and that it is consistent with the Magnuson-Stevens Act and other applicable laws.

This final rule has been determined to be not significant for purposes of Executive Order 12866.

The Chief Counsel for Regulation of the Department of Commerce certified to the Chief Counsel for Advocacy of the Small Business Administration during the proposed rule stage that this action would not have a significant economic impact on a substantial number of small entities. The factual basis for this certification was published in the proposed rule and is not repeated here. No comments were received regarding this certification. As a result, a regulatory flexibility analysis was not required and none was prepared.

List of Subjects in 50 CFR Part 622

Fisheries, Fishing, Puerto Rico, Reporting and recordkeeping requirements, Virgin Islands.

Dated: May 18, 2010.

Eric C. Schwaab,

Assistant Administrator For Fisheries, National Marine Fisheries Service.

■ For the reasons set out in the preamble, 50 CFR part 622 is amended as follows:

PART 622—FISHERIES OF THE CARIBBEAN, GULF, AND SOUTH ATLANTIC

■ 1. The authority citation for part 622 continues to read as follows:

Authority: 16 U.S.C. 1801 *et seq.*

■ 2. In § 622.41, paragraphs (g)(3)(ii)(A) and (B) are revised to read as follows:

§ 622.41 Species specific limitations.

* * * * *

(g) * * *

(3) * * *

(ii) * * *

(A) Extended funnel—Gulf EEZ only; through May 24, 2012.

(B) Composite Panel—Gulf EEZ and South Atlantic EEZ; through May 24, 2012.

* * * * *

■ 3. In Appendix D to part 622, section G, the first sentence of paragraph 2(a), and paragraph 2(b) are revised to read as follows:

Appendix D to Part 622—Specifications for Certified BRDs

* * * * *

G. * * *

2. * * *

(a) * * * The webbing extension must be constructed from a single rectangular piece of 1 ½–inch to 1 ¾–inch (3.8–cm to 4.5–cm) stretch mesh with dimensions of 24 ½ meshes by 150 to 160 meshes. * * *

(b) *Funnel.* The V-shaped funnel consists of two webbing panels attached to the extension along the leading edge of the panels. The top and bottom edges of the panels are sewn diagonally across the extension toward the center to form the funnel. The panels are 2–ply in design, each with an inner layer of 1 ½–inch to 1 ⅝–inch (3.8–cm to 4.1–cm) heat-set and depth-stretched polyethylene webbing and an outer layer constructed of no larger than 2–inch (5.1–cm) square mesh webbing (1–inch bar). The inner webbing layer must be rectangular in shape, 36 meshes on the leading edge by 20 meshes deep. The 36–mesh leading edges of the polyethylene webbing should be sewn evenly to 24 meshes of the extension webbing 1 ½ meshes from and parallel to the leading edge of the extension starting 12 meshes up from the bottom center on each side. Alternately sew 2 meshes of the polyethylene webbing to 1 mesh of the extension webbing then 1 mesh of the polyethylene webbing to 1 mesh of the extension webbing toward the top. The bottom 20–mesh edges of the polyethylene layers are sewn evenly to the extension webbing on a 2 bar 1 mesh angle toward the bottom back center forming a v-shape in the bottom of the extension webbing. The top 20–mesh edges of the polyethylene layers are sewn evenly along the bars of the extension webbing toward the top back center. The square mesh layers must be rectangular in shape and constructed of no larger than 2–inch (5.1–cm) webbing that is 18 inches (45.7 cm) in length on the leading edge. The depth

of the square mesh layer must be no more than 2 inches (5.1 cm) less than the 20 mesh side of the inner polyethylene layer when stretched taught. The 18–inch (45.7–cm) leading edge of each square mesh layer must be sewn evenly to the 36–mesh leading edge of the polyethylene section and the sides are sewn evenly (in length) to the 20–mesh edges of the polyethylene webbing. This will form a v-shape funnel using the top of the extension webbing as the top of the funnel and the bottom of the extension webbing as the bottom of the funnel.

* * * * *

[FR Doc. 2010–12384 Filed 5–21–10; 8:45 am]

BILLING CODE 3510–22–S

DEPARTMENT OF COMMERCE

National Oceanic and Atmospheric Administration

50 CFR Part 648

[Docket No. 0907021105–0024–03]

RIN 0648–AY00

Fisheries of the Northeastern United States; Atlantic Mackerel, Squid, and Butterfish Fisheries; Amendment 10; Correction

AGENCY: National Marine Fisheries Service (NMFS), National Oceanic and Atmospheric Administration (NOAA), Commerce.

ACTION: Final rule; correction.

SUMMARY: On March 11, 2010, a final rule to implement Amendment 10 to the Atlantic Mackerel, Squid, and Butterfish (MSB) Fishery Management Plan (FMP) was published in the **Federal Register**. The regulatory text specifying gear restrictions did not reflect the increase in the minimum mesh size requirement for net strengtheners in the *Loligo* fishery from 4 ½ inches (11.43 cm) to 5 inches (12.7 cm) that was enacted in the MSB specifications and management measures for the 2010 fishing year. This document corrects that error.

DATES: Effective September 13, 2010.

FOR FURTHER INFORMATION CONTACT: Lindsey Feldman, Fisheries Management Specialist, (978) 675–2179, fax (978) 281–9135.

SUPPLEMENTARY INFORMATION:

Background

On March 11, 2010 (75 FR 11441), a final rule was published implementing Amendment 10 to the MSB FMP (Amendment 10). Amendment 10 increased the minimum codend mesh size requirement for the *Loligo* squid (*Loligo*) fishery, established a butterfish rebuilding program with a butterfish mortality cap for the *Loligo* fishery, established a 72–hr trip notification requirement for the *Loligo* fishery, and required an annual assessment of the butterfish rebuilding program by the Council's Scientific and Statistical Committee (SSC). The regulatory text specifying gear restrictions (§ 648.23) did not reflect the increase in the minimum mesh sizes requirement for net strengtheners in the *Loligo* fishery from 4 ½ inches (11.43 cm) to 5 inches (12.7 cm) that was implemented in the final MSB specifications and management measures for the 2010 fishing year (February 3, 2010, 75 FR 5537), and becomes effective on September 13, 2010. This document corrects this error.

Correction

Accordingly, the final rule, published on March 11, 2010, at 75 FR 11441, is corrected as follows:

1. On page 11450, beginning in column 2, § 648.23 (a)(3)(i) is correctly revised to read as follows:

§ 648.23 Gear restrictions.

(a) * * *

(3) * * *

(i) *Net obstruction or constriction.* Owners or operators of otter trawl vessels fishing for and/or possessing *Loligo* shall not use any device, gear, or material, including, but not limited to, nets, net strengtheners, ropes, lines, or chafing gear, on the top of the regulated portion of a trawl net that results in an effective mesh opening of less than 2⅛ inches (54 mm), during Trimesters I (Jan–Apr) and III (Sept–Dec), or 1⅞ inches (48 mm), during Trimester II (May–Aug), diamond mesh, inside stretch measure. "Top of the regulated portion of the net" means the 50 percent of the entire regulated portion of the net that would not be in contact with the ocean bottom if, during a tow, the regulated portion of the net were laid flat on the ocean floor. However, owners or operators of otter trawl vessels fishing for and/or possessing *Loligo* may use net strengtheners (covers), splitting straps, and/or bull ropes or wire around the entire circumference of the codend, provided they do not have a mesh opening of less than 5 inches (12.7 cm) diamond mesh, inside stretch measure. For the purposes of this requirement, head ropes are not to be considered part of the top of the regulated portion of a trawl net.

* * * * *

Dated: May 18, 2010.

Eric C. Schwaab,

Assistant Administrator For Fisheries, National Marine Fisheries Service

[FR Doc. 2010–12388 Filed 5–21–10; 8:45 am]

BILLING CODE 3510–22–S

Proposed Rules

Federal Register
Vol. 75, No. 99
Monday, May 24, 2010

This section of the FEDERAL REGISTER contains notices to the public of the proposed issuance of rules and regulations. The purpose of these notices is to give interested persons an opportunity to participate in the rule making prior to the adoption of the final rules.

DEPARTMENT OF AGRICULTURE

Food Safety and Inspection Service

9 CFR Part 310

[Docket No. FSIS–2007–0039]

RIN 0583–AD33

Permission To Use Air Inflation of Meat Carcasses and Parts

AGENCY: Food Safety and Inspection Service, USDA.

ACTION: Proposed Rule.

SUMMARY: The Food Safety and Inspection Service (FSIS) is proposing to revise the Federal meat inspection regulations to permit establishments that slaughter livestock or prepare livestock carcasses and parts to inflate carcasses and parts with air if they develop, implement, and maintain written controls to ensure that the procedure does not cause insanitary conditions or adulterate product. FSIS is proposing to require that establishments incorporate these controls into their Hazard Analysis and Critical Control Point (HACCP) plans or Sanitation standard operating procedures (Sanitation SOPs) or other prerequisite programs.

In addition, FSIS is proposing to amend its regulations to remove the approved methods for inflating livestock carcasses and parts by air and to remove the requirement that establishments submit requests to FSIS for approval of air inflation procedures not listed in the regulations.

DATES: Comments must be received on or before June 23, 2010.

ADDRESSES: FSIS invites interested persons to submit comments on this proposed rule. Comments may be submitted by either of the following methods:

- *Federal eRulemaking Portal:* This Web site provides the ability to type short comments directly into the comment field on this Web page or attach a file for lengthier comments. Go to *http://www.regulations.gov.* Follow the online instructions at that site for submitting comments.
- *Mail, including floppy disks or CD–ROMs, and hand- or courier-delivered items:* Send to Docket Clerk, USDA, FSIS, Room 2–2175 George Washington Carver Center, 5601 Sunnyside Avenue, Mailstop 5272, Beltsville, MD 20705.

Instructions: All items submitted by mail or electronic mail must include the Agency name and docket number FSIS–2007–0039. Comments received in response to this docket will be made available for public inspection and posted without change, including any personal information, to *http://www.regulations.gov.*

Docket: For access to background documents or comments received, go to the FSIS Docket Room at the address listed above between 8:30 a.m. and 4:30 p.m., Monday through Friday.

FOR FURTHER INFORMATION CONTACT: Rachel Edelstein, Director, Policy Issuances Division, Office of Policy and Program Development, Food Safety and Inspection Service, U.S. Department of Agriculture, Washington, DC 20250; (202) 720–5627.

SUPPLEMENTARY INFORMATION: FSIS has been delegated the authority to exercise the functions of the Secretary of Agriculture as specified in the Federal Meat Inspection Act (FMIA) (21 U.S.C. 601, *et seq.*). Under this statute, FSIS protects the public by verifying that meat products are safe, wholesome, not adulterated, and properly labeled and packaged.

On October 3, 1970, the Federal Meat Inspection regulations were revised to prohibit inflation with air of carcasses or parts of carcasses (35 FR 15568). On September 5, 1989, FSIS modified the prohibition in 9 CFR 310.13(a) by providing for the use of several air inflation procedures that had been field tested, and that the Agency found were acceptable. These methods involve inflating carcasses and parts of carcasses with compressed air during dressing operations to facilitate head skinning and the removal of hides and foot hair (54 FR 36755).

Establishments interested in the use of air inflation procedures for other than the approved methods are required to submit to FSIS a request for experimental testing of any unapproved procedure (9 CFR 310.13(a)(2)). The regulations require that these requests state the purpose of the use of air, provide a detailed description of the procedure, and include evidence that the procedure can be performed in a sanitary manner. The regulations also provide that if FSIS finds a new method to be acceptable, it will modify its regulations to include the new method.

In the 1989 final rule, FSIS stated that its original intent in disallowing the use of air inflation was to prevent insanitary conditions from arising and to prevent the adulteration of carcasses or parts of carcasses (54 FR 36755). However, the Agency recognized in that final rule that air inflation procedures could be used in a sanitary manner without adulterating product and consequently approved limited use of air inflation procedures. On July 20, 1990, FSIS amended 9 CFR 310.13(a)(2)(iv) to allow for the use of compressed air injected into the abdominal cavity of swine to facilitate the skinning operation and to minimize the loss of body fat (55 FR 29564).[1]

Under 9 CFR 303.1(h), the Administrator may waive specific regulations for limited periods to permit experimentation so that new procedures, equipment, or processing techniques may be tested to facilitate definite improvements. Under a waiver that FSIS has granted, Packerland Co.[2] is using air inflation methodology to separate the brisket and round portions from beef carcasses for more efficient fabrication. FSIS requested that Packerland collect aerobic bacteria plate counts (APC) and submit the data to FSIS as a means of determining whether the use of air inflation would cause insanitary conditions or adulterate product. APC data are meaningful measures of bacteria levels on carcasses. Packerland Co. has petitioned FSIS to amend its regulations to allow for this air inflation methodology and presented APC data in the petition. The data submitted in the petition show that there is no significant difference between treated (injected with air) and untreated carcasses with regards to APC. Hence, the data show that the use of Packerland's air inflation procedure does not cause insanitary conditions or adulterate product.

[1] On January 12, 2004, FSIS amended 9 CFR 310.13(a)(2)(iv)(D) to prohibit the use of compressed air injection into the skull of cattle in conjunction with a captive bolt stunner (69 FR 1891).

[2] Packerland Co. is also known as JBS Packerland.

Based on the Agency's accumulated experience with air inflation procedures and in response to Packerland's petition, FSIS is proposing to amend 9 CFR 310.13(a) to permit establishments that slaughter livestock or prepare livestock carcasses and parts to inflate carcasses or parts of carcasses with air if they develop, implement, and maintain controls to ensure that those procedures do not cause insanitary conditions or adulterate product. FSIS is proposing to require that establishments incorporate these controls into their HACCP plans or Sanitation SOPs or other prerequisite programs. In addition, FSIS is proposing to amend its regulations to remove the requirement that establishments submit requests to FSIS for approval of air inflation procedures not listed in the regulations.

FSIS is also proposing to remove the approved methods for inflating meat carcasses and parts from the regulations. Establishments that are using an approved air inflation procedure could continue to do so, but they would be required to incorporate their air inflation procedures into their HACCP plans or Sanitation SOPs or other prerequisite programs. This proposal is consistent with the HACCP regulations. As part of their HACCP plans and hazard analysis, establishments are required to prepare a flow chart describing the steps of each process and product flow in the establishment (9 CFR 417.2(a)(2)). If the establishment uses air inflation procedures, under this proposed rule, the flow chart would need to include those procedures. Under the HACCP regulations, establishments are also required to consider whether air inflation may make biological hazards, such as contamination with certain pathogens, reasonably likely to occur (9 CFR 417.2(a)(1)).

Also under the HACCP regulations, if the establishment determines that air inflation procedures do not introduce any hazards, it is to document the reasons for this determination in its decision-making documents that are associated with the hazard analysis (9 CFR 417.5). Under these regulations, if establishments that use air inflation maintain controls outside of their HACCP plans to ensure that air inflation procedures do not cause insanitary conditions or adulterate product, they would be required to incorporate such controls in their Sanitation SOPs or another prerequisite program.

If this proposed rule becomes final, FSIS will verify that establishments that choose to use air inflation procedures have implemented and maintain written controls that are adequate and effective to ensure that the procedures do not cause insanitary conditions or adulterate product. FSIS will verify the effectiveness of these controls by reviewing establishment records and directly observing the air inflation procedures. FSIS will verify that establishments using air inflation have incorporated their procedures for inflating meat carcasses and parts with air into their HACCP plan or Sanitation SOP or other prerequisite program. In addition, FSIS will assess whether establishments verify on an ongoing basis that their controls are effectively preventing insanitary conditions and adulteration during air inflation.

This proposed rule would provide establishments with more production options and would encourage the development of new technology without diminishing food safety.

Executive Order 12866 and the Regulatory Flexibility Act

This action has been reviewed for compliance with Executive Order 12866. The Office of Management and Budget has designated this proposed rule "non-significant" and therefore has not reviewed it.

Meat Industry Overview

Excluding slaughtering only and raw-ground meat processing only, there are about 2,818 federally inspected establishments, which under this proposed rule could adopt air inflation technology to process raw-not-ground meat.[3] Furthermore, of the 2,818 federally inspected establishments, approximately 1,541 are considered very small (with less than 10 employees), 1,153 are considered small (with between 10 and 500 employees), and 124 are considered large (with more than 500 employees).[4]

Estimated Benefits

Allowing for greater ease in introducing new air inflation technology and procedures would likely spur technological innovation that will provide these new technologies and procedures to additional meat establishments. Greater technological innovation more widely used by industry would likely result in increased net higher-value meat yields, which would lead to consumer savings. Because the rule is voluntary, it is difficult for the Agency to quantify benefits of the rule to the industry of the rule and to consumers. FSIS requests information about the likely net benefits, and the likely adoption rates of these types of air inflation procedures in meat operations.

Estimated Costs

Under this proposal, establishments would be required to incorporate their controls for air inflation procedures into their HACCP plan, Sanitation SOP or other prerequisite program. FSIS does not anticipate any new costs associated with this analysis because the HACCP regulations already require that establishments consider the steps of each process, including procedures such as air inflation, as part of their HACCP plan and hazard analysis. Since the use of air inflation procedures is voluntary, establishments would not incur any costs associated with the use of air inflation procedures unless they expected to realize net benefits from the use of the new technology. Therefore, this rule would result in negligible costs but would provide benefits.

Regulatory Flexibility Analysis

As required by the Regulatory Flexibility Act (5 U.S.C. 601–612), the FSIS Administrator has examined the economic implications of the proposed rule and has determined that it would not have a significant impact on a substantial number of small entities. Under the proposed rule, no establishments are required to use air inflation procedures to inflate meat carcasses or parts, and establishments are only likely to do so if they would expect to realize profits by employing such methods.

Executive Order 12988

This proposed rule has been reviewed under Executive Order 12988, Civil Justice Reform. Under this proposed rule: (1) All State and local laws and regulations that are inconsistent with this rule will be preempted; (2) no retroactive effect will be given to this rule; and (3) no retroactive proceedings will be required before parties may file suit in court challenging this rule.

Paperwork Requirements

FSIS has reviewed this proposed rule under the Paperwork Reduction Act of 1995 (44 U.S.C. 3501–3520) and has determined that the information collection related to HACCP plans, Sanitation SOPs, and prerequisite programs has been approved by OMB under OMB Control Number 0583–0103.

E-Government Act

FSIS and USDA are committed to achieving the purposes of the E-Government Act (44 U.S.C. 3601, *et seq.*) by, among other things, promoting the use of the Internet and other

[3] Performance Based Inspection System. 2009.

[4] *Ibid.*

information technologies and providing increased opportunities for citizen access to Government information and services, and for other purposes.

Additional Public Notification

Public awareness of all segments of rulemaking and policy development is important. Consequently, in an effort to ensure that the public and in particular minorities, women, and persons with disabilities, are aware of this proposed rule, FSIS will announce it on-line through the FSIS Web page located at *http://www.fsis.usda.gov/regulations/2010_Proposed_Rules_Index/index.asp.*

FSIS also will make copies of this **Federal Register** publication available through the *FSIS Constituent Update,* which is used to provide information regarding FSIS policies, procedures, regulations, **Federal Register** notices, FSIS public meetings, and other types of information that could affect or would be of interest to our constituents and stakeholders. The *Update* is communicated via Listserv, a free e-mail subscription service consisting of industry, trade, and farm groups, consumer interest groups, allied health professionals, scientific professionals, and other individuals who have requested to be included. The *Update* also is available on the FSIS Web page. Through Listserv and the Web page, FSIS is able to provide information to a much broader, more diverse audience.

In addition, FSIS offers an e-mail subscription service which provides automatic and customized access to selected food safety news and information. This service is available at *http://www.fsis.usda.gov/news_and_events/email_subscription/.* Options range from recalls to export information to regulations, directives and notices. Customers can add or delete subscriptions themselves, and have the option to password protect their accounts.

List of Subjects in 9 CFR Part 310

Meat inspection.

Accordingly, the Food Safety and Inspection Service proposes to amend 9 CFR part 310 as follows:

PART 310—POST-MORTEM INSPECTION

1. The authority citation for part 310 continues to read as follows:

Authority: 21 U.S.C. 601–695; 7 CFR 2.18, 2.53.

2. Amend § 310.13(a) to revise paragraph (a) to read as follows:

§ 310.13 Inflating carcasses or parts thereof; transferring caul or other fat.

(a) Establishments that slaughter livestock and prepare livestock carcasses and parts may inflate carcasses or parts of carcasses with air if they develop, implement, and maintain controls to ensure that the air inflation procedure does not cause insanitary conditions or adulterate product. Establishments must incorporate these controls into their HACCP plans or Sanitation SOPs or other prerequisite programs.

* * * * *

Done at Washington, DC, on May 14, 2010.

Alfred V. Almanza,

Administrator.

[FR Doc. 2010–12337 Filed 5–21–10; 8:45 am]

BILLING CODE 3410–DM–P

DEPARTMENT OF TRANSPORTATION

Federal Aviation Administration

14 CFR Part 71

[Docket No. FAA–2010–0498; Airspace Docket No. 10–ASO–26]

Amendment of Class E Airspace; Pine Mountain, GA

AGENCY: Federal Aviation Administration (FAA), DOT.

ACTION: Notice of proposed rulemaking (NPRM).

SUMMARY: This action proposes to amend Class E Airspace at Pine Mountain, GA, to accommodate the additional airspace needed for the Standard Instrument Approach Procedures (SIAPs) developed for Harris County Airport. This action enhances the safety and airspace management of Instrument Flight Rules (IFR) operations at the airport.

DATES: Comments must be received on or before July 8, 2010.

ADDRESSES: Send comments on this rule to: U.S. Department of Transportation, Docket Operations, West Building Ground Floor, Room W12–140, 1200 New Jersey Avenue, SE., Washington, DC 20590–0001; Telephone: 1–800–647–5527; Fax: 202–493–2251. You must identify the Docket Number FAA–2010–0498; Airspace Docket No. 10–ASO–26, at the beginning of your comments. You may also submit and review received comments through the Internet at *http://www.regulations.gov.*

FOR FURTHER INFORMATION CONTACT: Melinda Giddens, Operations Support Group, Eastern Service Center, Federal Aviation Administration, P.O. Box 20636, Atlanta, Georgia 30320; telephone (404) 305–5610.

SUPPLEMENTARY INFORMATION:

Comments Invited

Interested persons are invited to comment on this rule by submitting such written data, views, or arguments, as they may desire. Comments that provide the factual basis supporting the views and suggestions presented are particularly helpful in developing reasoned regulatory decisions on the proposal. Comments are specifically invited on the overall regulatory, aeronautical, economic, environmental, and energy-related aspects of the proposal.

Communications should identify both docket numbers (FAA Docket No. FAA–2010–0498; Airspace Docket No. 10–ASO–26) and be submitted in triplicate to the Docket Management System (*see* **ADDRESSES** section for address and phone number). You may also submit comments through the Internet at *http://www.regulations.gov.*

Comments wishing the FAA to acknowledge receipt of their comments on this action must submit with those comments a self-addressed stamped postcard on which the following statement is made: "Comments to Docket No. FAA–2010–0498; Airspace Docket No. 10–ASO–26." The postcard will be date/time stamped and returned to the commenter.

All communications received before the specified closing date for comments will be considered before taking action on the proposed rule. The proposal contained in this notice may be changed in light of the comments received. A report summarizing each substantive public contact with FAA personnel concerned with this rulemaking will be filed in the docket.

Availability of NPRMs

An electronic copy of this document may be downloaded from and comments submitted through *http://www.regulations.gov.* Recently published rulemaking documents can also be accessed through the FAA's Web page at *http://www.faa.gov/airports_airtraffic/air_traffic/publications/airspace_amendments/.*

You may review the public docket containing the proposal, any comments received, and any final disposition in person in the Dockets Office (*see* the **ADDRESSES** section for address and phone number) between 9 a.m. and 5 p.m., Monday through Friday, except Federal Holidays. An informal docket may also be examined during normal business hours at the office of the Eastern Service Center, Federal Aviation

Administration, room 210, 1701 Columbia Avenue, College Park, Georgia 30337.

Persons interested in being placed on a mailing list for future NPRM's should contact the FAA's Office of Rulemaking, (202) 267–9677, to request a copy of Advisory Circular No. 11–2A, Notice of Proposed Rulemaking Distribution System, which describes the application procedure.

The Proposal

The FAA is considering an amendment to Title 14, Code of Federal Regulations (14 CFR) part 71 to amend Class E airspace at Pine Mountain, GA to provide controlled airspace required to support the SIAPs for Harris County Airport. The existing Class E airspace extending upward from 700 feet above the surface would be modified for the safety and management of IFR operations.

Class E airspace designations are published in Paragraph 6005 of FAA order 7400.9T, signed August 27, 2009, and effective September 15, 2009, which is incorporated by reference in 14 CFR 71.1. The Class E airspace designation listed in this document will be published subsequently in the Order.

The FAA has determined that this proposed regulation only involves an established body of technical regulations for which frequent and routine amendments are necessary to keep them operationally current. It, therefore, (1) is not a "significant regulatory action" under Executive Order 12866; (2) is not a "significant rule" under DOT Regulatory Policies and Procedures (44 FR 11034; February 26, 1979); and (3) does not warrant preparation of a Regulatory Evaluation as the anticipated impact is so minimal. Since this is a routine matter that will only affect air traffic procedures and air navigation, it is certified that this proposed rule, when promulgated, would not have a significant economic impact on a substantial number of small entities under the criteria of the Regulatory Flexibility Act.

The FAA's authority to issue rules regarding aviation safety is found in Title 49 of the United States Code. Subtitle I, section 106 describes the authority of the FAA Administrator. Subtitle VII, Aviation Programs, describes in more detail the scope of the agency's authority. This proposed rulemaking is promulgated under the authority described in subtitle VII, part, A, subpart I, section 40103. Under that section, the FAA is charged with prescribing regulations to assign the use of airspace necessary to ensure the safety of aircraft and the efficient use of airspace. This proposed regulation is within the scope of that authority as it would amend Class E airspace at Harris County Airport, Pine Mountain, GA.

Lists of Subjects in 14 CFR Part 71

Airspace, Incorporation by reference, Navigation (air).

The Proposed Amendment

In consideration of the foregoing, the Federal Aviation Administration amends 14 CFR part 71 as follows:

PART 71—DESIGNATION OF CLASS A, B, C, D, AND CLASS E AIRSPACE AREAS; AIR TRAFFIC SERVICE ROUTES; AND REPORTING POINTS

1. The authority citation for part 71 continues to read as follows:

Authority: 49 U.S.C. 106(g); 40103, 40113, 40120; E.O. 10854, 24 FR 9565, 3 CFR, 1959–1963 Comp., p. 389.

§ 71.1 [Amended]

2. The incorporation by reference in 14 CFR 71.1 of Federal Aviation Administration Order 7400.9T, Airspace Designations and Reporting Points, signed August 27, 2009, effective September 15, 2009, is amended as follows:

Paragraph 6005 Class E Airspace Areas Extending Upward From 700 Feet or More Above the Surface of the Earth.

* * * * *

ASO GA E5 Pine Mountain, GA [Amended]

Harris County Airport, GA

(Lat. 32°50′26″ N., long. 84°52′57″ W.)

Pine Mountain NDB, GA

(Lat. 32°50′34″ N., long. 84°52′22″ W.)

That airspace extending upward from 700 feet above the surface within an 8-mile radius of the Harris County Airport and within 8 miles north and 4 miles south of the 267° bearing from the Pine Mountain NDB extending from the 8-mile radius of the Harris County Airport to 16 miles from the Harris County Airport.

Issued in College Park, Georgia, on May 14, 2010.

Mark D. Ward,

Manager, Operations Support Group, Eastern Service Center, Air Traffic Organization.

[FR Doc. 2010–12360 Filed 5–21–10; 8:45 am]

BILLING CODE 4910–13–P

DEPARTMENT OF HOMELAND SECURITY

Coast Guard

33 CFR Part 117

[Docket No. USCG–2010–0200]

RIN 1625–AA09

Drawbridge Operation Regulations; Passaic River, Clifton, NJ

AGENCY: Coast Guard, DHS.

ACTION: Notice of proposed rulemaking.

SUMMARY: The Coast Guard proposes to change the drawbridge operating regulations governing the operation of the Route 3 Bridge, mile 11.8, across the Passaic River at Clifton, New Jersey. Under this proposed rule the Route 3 Bridge need not open for the passage of vessel traffic.

DATES: Comments and related material must be received by the Coast Guard on or before June 23, 2010.

ADDRESSES: You may submit comments identified by docket number USCG–2010–0200 using any one of the following methods:

(1) *Federal Rulemaking Portal: http://www.regulations.gov.*

(2) *Fax:* 202–493–2251.

(3) *Mail:* Docket Management Facility (M–30), U.S. Department of Transportation, West Building Ground Floor, Room W12–140, 1200 New Jersey Avenue, SE., Washington, DC 20590–0001.

(4) *Hand delivery:* Same as mail address above, between 9 a.m. and 5 p.m., Monday through Friday, except Federal holidays. The telephone number is 202–366–9329.

To avoid duplication, please use only one of these methods. *See* the "Public Participation and Request for Comments" portion of the **SUPPLEMENTARY INFORMATION** section below for instructions on submitting comments.

FOR FURTHER INFORMATION CONTACT: If you have questions on this proposed rule, call or e-mail Mr. Joe Arca, Project Officer, First Coast Guard District, telephone 212–668–7165, e-mail *joe.arca@uscg.mil.* If you have questions on viewing or submitting material to the docket, call Renee V. Wright, Program Manager, Docket Operations, telephone 202–366–9826.

SUPPLEMENTARY INFORMATION:

Public Participation and Request for Comments

We encourage you to participate in this rulemaking by submitting

comments and related materials. All comments received will be posted, without change to *http://www.regulations.gov* and will include any personal information you have provided.

Submitting Comments

If you submit a comment, please include the docket number for this rulemaking (USCG–2010–0200), indicate the specific section of this document to which each comment applies, and provide a reason for each suggestion or recommendation. You may submit your comments and material online (*http://www.regulations.gov*), or by fax, mail or hand delivery, but please use only one of these means. If you submit a comment online via *http://www.regulations.gov*, it will be considered received by the Coast Guard when you successfully transmit the comment. If you fax, hand delivery, or mail your comment, it will be considered as having been received by the Coast Guard when it is received at the Docket Management Facility. We recommend that you include your name and a mailing address, an e-mail address, or a phone number in the body of your document so that we can contact you if we have questions regarding your submission.

To submit your comment online, go to *http://www.regulations.gov*, click on the "submit a comment" box, which will then become highlighted in blue. In the "Document Type" drop down menu select "Proposed Rules" and insert "USCG–2010–0200" in the "Keyword" box. Click "Search" then click on the balloon shape in the "Actions" column. If you submit your comments by mail or hand delivery, submit them in an unbound format, no larger than 8½ by 11 inches, suitable for copying and electronic filing. If you submit them by mail and would like to know that they reached the Facility, please enclose a stamped, self-addressed postcard or envelope. We will consider all comments and material received during the comment period and may change the rule based on your comments.

Viewing Comments and Documents

To view comments, as well as documents mentioned in this preamble as being available in the docket, go to *http://www.regulations.gov*, click on the "read comments" box, which will then become highlighted in blue. In the "Keyword" box insert "USCG–2010–0200" and click "Search." Click the "Open Docket Folder" in the "Actions" column. You may also visit either the Docket Management Facility in Room W12–140 on the ground floor of the Department of Transportation West Building, 1200 New Jersey Avenue, SE., Washington, DC 20590, between 9 a.m. and 5 p.m., Monday through Friday, except Federal holidays. We have an agreement with the Department of Transportation to use the Docket Management Facility.

Privacy Act

Anyone can search the electronic form of comments received into any of our dockets by the name of the individual submitting the comment (or signing the comment, if submitted on behalf of an association, business, labor union, etc.). You may review a Privacy Act notice regarding our public dockets in the January 17, 2008, issue of the **Federal Register** (73 FR 3316).

Public Meeting

We do not now plan to hold a public meeting. But you may submit a request for one using one of the four methods specified under **ADDRESSES**. Please explain why one would be beneficial. If we determine that one would aid this rulemaking, we will hold one at a time and place announced by a later notice in the **Federal Register**.

Background and Purpose

The Route 3 Bridge has a vertical clearance of 35 feet at mean high water, and 40 feet at mean low water in the closed position. The existing drawbridge operating regulations listed at 33 CFR 117.739(n), require the bridge to open on signal after at least a 24 hour advance notice is given by calling the number posted at the bridge.

The existing Route 3 Bridge will soon be replaced with a new fixed highway bridge on a different alignment because it is in poor condition and must be replaced as soon as possible. A submarine utility communication cable is presently located on the proposed alignment of the new replacement bridge and will need to be temporarily relocated during the construction of the new Route 3 highway bridge.

The best alternative and least disruptive impact to the environment is to temporarily relocate the communication cable to the underside of the existing Route 3 Bridge. As a result of that temporary installation of the communication cable the existing Route 3 Bridge will not be able to be opened for vessel traffic.

The Route 3 Bridge has not received a request to open since 1998.

On September 10, 2009, the bridge owner, New Jersey Department of Transportation (NJDOT), requested a change to the drawbridge operation regulations to allow the existing Route 3 Bridge to not open for the passage of vessel traffic in order to facilitate the temporary installation of the communication cable and permit the new bridge construction to commence.

Once the new bridge construction is completed and the new bridge is opened for vehicular traffic the old existing Route 3 Bridge will be removed.

Discussion of Proposed Rule

The existing regulation for the Route 3 Bridge requires it to open on signal after at least a 24 hour advance notice is given by calling the number posted at the bridge.

The Route 3 Bridge has not received a request to open since 1998, and no requests to open are anticipated.

The bridge is scheduled to be demolished due to the construction of a new replacement bridge. A communications cable must be attached temporarily in order to facilitate the new bridge construction. It was decided that since the Route 3 Bridge has not opened since 1998, that relocating the communications cable on to the old bridge should not impact navigation.

Regulatory Analyses

We developed this proposed rule after considering numerous statutes and executive orders related to rulemaking. Below we summarize our analyses based on 13 of these statutes or executive orders.

Regulatory Planning and Review

This proposed rule is not a "significant regulatory action" under section 3(f) of Executive Order 12866, Regulatory Planning and Review, and does not require an assessment of potential costs and benefits under section 6(a)(3) of that Order. The Office of Management and Budget has not reviewed it under that Order. This conclusion is based upon the fact that the Route 3 Bridge has not opened since 1998, and no requests to open are anticipated before its removal.

Small Entities

Under the Regulatory Flexibility Act (5 U.S.C. 601–612), we have considered whether this proposed rule would have a significant economic impact on a substantial number of small entities. The term "small entities" comprises small businesses, not-for-profit organizations that are independently owned and operated and are not dominant in their fields, and governmental jurisdictions with populations of less than 50,000.

The Coast Guard certifies under 5 U.S.C. 605(b) that this proposed rule

would not have a significant economic impact on a substantial number of small entities. This action will not have a significant economic impact on a substantial number of small entities for the following reasons. This conclusion is based upon the fact that the Route 3 Bridge has not opened since 1998, and no requests to open are anticipated before its removal.

If you think that your business, organization, or governmental jurisdiction qualifies as a small entity and that this rule would have a significant economic impact on it, please submit a comment (*see* **ADDRESSES**) explaining why you think it qualifies and how and to what degree this rule would economically affect it.

Assistance for Small Entities

Under section 213(a) of the Small Business Regulatory Enforcement Fairness Act of 1996 (Pub. L. 104–121), we want to assist small entities in understanding this proposed rule so that they can better evaluate its effects on them and participate in the rulemaking. If the rule would affect your small business, organization, or governmental jurisdiction and you have questions concerning its provisions or options for compliance, please contact Commander (dpb), First Coast Guard District, Bridge Branch, One South Street, New York, NY, 10004. The telephone number is (212) 668–7165. The Coast Guard will not retaliate against small entities that question or complain about this proposed rule or any policy or action of the Coast Guard.

Collection of Information

This proposed rule would call for no new collection of information under the Paperwork Reduction Act of 1995 (44 U.S.C. 3501–3520).

Federalism

A rule has implications for federalism under Executive Order 13132, Federalism, if it has a substantial direct effect on State or local governments and would either preempt State law or impose a substantial direct cost of compliance on them. We have analyzed this proposed rule under that Order and have determined that it does not have implications for federalism.

Unfunded Mandates Reform Act

The Unfunded Mandates Reform Act of 1995 (2 U.S.C. 1531–1538) requires Federal agencies to assess the effects of their discretionary regulatory actions. In particular, the Act addresses actions that may result in the expenditure by a State, local, or Tribal government, in the aggregate, or by the private sector of $100,000,000 (adjusted for inflation) or more in any one year. Though this proposed rule will not result in such an expenditure, we do discuss the effects of this rule elsewhere in this preamble.

Taking of Private Property

This proposed rule would not cause a taking of private property or otherwise have taking implications under Executive Order 12630, Governmental Actions and Interference with Constitutionally Protected Property Rights.

Civil Justice Reform

This proposed rule meets applicable standards in sections 3(a) and 3(b)(2) of Executive Order 12988, Civil Justice Reform, to minimize litigation, eliminate ambiguity, and reduce burden.

Protection of Children

We have analyzed this proposed rule under Executive Order 13045, Protection of Children from Environmental Health Risks and Safety Risks. This rule is not an economically significant rule and would not create an environmental risk to health or risk to safety that might disproportionately affect children.

Indian Tribal Governments

This proposed rule does not have Tribal implications under Executive Order 13175, Consultation and Coordination with Indian Tribal Governments, because it would not have a substantial direct effect on one or more Indian Tribes, on the relationship between the Federal Government and Indian Tribes, or on the distribution of power and responsibilities between the Federal Government and Indian Tribes.

Energy Effects

We have analyzed this proposed rule under Executive Order 13211, Actions Concerning Regulations That Significantly Affect Energy Supply, Distribution, or Use. We have determined that it is not a "significant energy action" under that order because it is not a "significant regulatory action" under Executive Order 12866 and is not likely to have a significant adverse effect on the supply, distribution, or use of energy. The Administrator of the Office of Information and Regulatory Affairs has not designated it as a significant energy action. Therefore, it does not require a Statement of Energy Effects under Executive Order 13211.

Technical Standards

The National Technology Transfer and Advancement Act (NTTAA) (15 U.S.C. 272 note) directs agencies to use voluntary consensus standards in their regulatory activities unless the agency provides Congress, through the Office of Management and Budget, with an explanation of why using these standards would be inconsistent with applicable law or otherwise impractical. Voluntary consensus standards are technical standards (*e.g.,* specifications of materials, performance, design, or operation; test methods; sampling procedures; and related management systems practices) that are developed or adopted by voluntary consensus standards bodies.

This proposed rule does not use technical standards. Therefore, we did not consider the use of voluntary consensus standards.

Environment

We have analyzed this proposed rule under Department of Homeland Security Management Directive 023–01, and Commandant Instruction M16475.lD which guides the Coast Guard in complying with the National Environmental Policy Act of 1969 (NEPA) (42 U.S.C. 4321–4370f), and have made a preliminary determination that this action is one of a category of actions which do not individually or cumulatively have a significant effect on the human environment because it simply promulgates the operating regulations or procedures for drawbridges. We seek any comments or information that may lead to the discovery of a significant environmental impact from this proposed rule.

List of Subjects in 33 CFR Part 117

Bridges.

For the reasons discussed in the preamble, the Coast Guard proposes to amend 33 CFR part 117 as follows:

PART 117—DRAWBRIDGE OPERATION REGULATIONS

1. The authority citation for part 117 continues to read as follows:

Authority: 33 U.S.C. 499; 33 CFR 1.05–1(g); Department of Homeland Security Delegation No. 0170.1.

2. Section 117.739 is amended by revising paragraph (n) to read as follows:

§ 117.739 Passaic River.

* * * * *

(n) The draw of the Route 3 Bridge, mile 11.8, need not be opened for the passage of vessel traffic.

* * * * *

Dated: May 3, 2010.

Joseph L. Nimmich,

Rear Admiral, U.S. Coast Guard, Commander, First Coast Guard District.

[FR Doc. 2010–12344 Filed 5–21–10; 8:45 am]

BILLING CODE 9110–04–P

DEPARTMENT OF HOMELAND SECURITY

Coast Guard

33 CFR Part 165

[Docket No. USCG–2010–0059]

RIN 1625–AA00

Safety Zone; Osage River, Mile 016.8 to 017.2

AGENCY: Coast Guard, DHS.

ACTION: Notice of proposed rulemaking.

SUMMARY: The Coast Guard proposes establishing a temporary safety zone for all waters of the Osage River, Mile 016.8 to 017.2, extending the entire width of the river. This safety zone is needed to protect persons and vessels from safety hazards associated with a fireworks display occurring on the Osage River. Entry into this zone would be prohibited unless specifically authorized by the Captain of the Port Upper Mississippi River or a designated representative.

DATES: Comments and related material must be received by the Coast Guard on or before June 8, 2010.

ADDRESSES: You may submit comments identified by docket number USCG–2010–0059 using any one of the following methods:

(1) *Federal eRulemaking Portal: http://www.regulations.gov.*

(2) *Fax:* 202–493–2251.

(3) *Mail:* Docket Management Facility (M–30), U.S. Department of Transportation, West Building Ground Floor, Room W12–140, 1200 New Jersey Avenue, SE., Washington, DC 20590–0001.

(4) *Hand delivery:* Same as mail address above, between 9 a.m. and 5 p.m., Monday through Friday, except Federal holidays. The telephone number is 202–366–9329.

To avoid duplication, please use only one of these four methods. *See* the "Public Participation and Request for Comments" portion of the **SUPPLEMENTARY INFORMATION** section below for instructions on submitting comments.

FOR FURTHER INFORMATION CONTACT: If you have questions on this proposed rule, call or e-mail Lieutenant Commander (LCDR) Matthew Barker, Sector Upper Mississippi River Response Department at telephone 314–269–2540, e-mail *Matthew.P.Barker@uscg.mil.* If you have questions on viewing or submitting material to the docket, call Renee V. Wright, Program Manager, Docket Operations, telephone 202–366–9826.

SUPPLEMENTARY INFORMATION:

Public Participation and Request for Comments

We encourage you to participate in this rulemaking by submitting comments and related materials. All comments received will be posted without change to *http://www.regulations.gov* and will include any personal information you have provided.

Submitting Comments

If you submit a comment, please include the docket number for this rulemaking (USCG–2010–0059), indicate the specific section of this document to which each comment applies, and provide a reason for each suggestion or recommendation. You may submit your comments and material online (via *http://www.regulations.gov*) or by fax, mail, or hand delivery, but please use only one of these means. If you submit a comment online via *http://www.regulations.gov,* it will be considered received by the Coast Guard when you successfully transmit the comment. If you fax, hand deliver, or mail your comment, it will be considered as having been received by the Coast Guard when it is received at the Docket Management Facility. We recommend that you include your name and a mailing address, an e-mail address, or a telephone number in the body of your document so that we can contact you if we have questions regarding your submission.

To submit your comment online, go to *http://www.regulations.gov*, click on the "submit a comment" box, which will then become highlighted in blue. In the "Document Type" drop down menu select "Proposed Rule" and insert "USCG–2010–0059" in the "Keyword" box. Click "Search" then click on the balloon shape in the "Actions" column. If you submit your comments by mail or hand delivery, submit them in an unbound format, no larger than 8½ by 11 inches, suitable for copying and electronic filing. If you submit comments by mail and would like to know that they reached the Facility, please enclose a stamped, self-addressed postcard or envelope. We will consider all comments and material received during the comment period and may change the rule based on your comments.

Viewing Comments and Documents

To view comments, as well as documents mentioned in this preamble as being available in the docket, go to *http://www.regulations.gov*, click on the "read comments" box, which will then become highlighted in blue. In the "Keyword" box insert "USCG–2010–0059" and click "Search." Click the "Open Docket Folder" in the "Actions" column. You may also visit the Docket Management Facility in Room W12–140 on the ground floor of the Department of Transportation West Building, 1200 New Jersey Avenue, SE., Washington, DC 20590, between 9 a.m. and 5 p.m., Monday through Friday, except Federal holidays. We have an agreement with the Department of Transportation to use the Docket Management Facility.

Privacy Act

Anyone can search the electronic form of comments received into any of our dockets by the name of the individual submitting the comment (or signing the comment, if submitted on behalf of an association, business, labor union, *etc.*). You may review a Privacy Act notice regarding our public dockets in the January 17, 2008, issue of the **Federal Register** (73 FR 3316).

Public Meeting

We do not now plan to hold a public meeting. But you may submit a request for one on or before June 8, 2010, using one of the four methods specified under **ADDRESSES**. Please explain why you believe a public meeting would be beneficial. If we determine that one would aid this rulemaking, we will hold one at a time and place announced by a later notice in the **Federal Register**.

For information on facilities or services for individuals with disabilities or to request special assistance at the public meeting, contact LCDR Matthew Barker at the telephone number or e-mail address indicated under the **FOR FURTHER INFORMATION CONTACT** section of this notice.

Background and Purpose

On July 4, 2010 Scott Barnes will be sponsoring a fireworks display between mile 016.8 and 017.2 on the Osage River. This event presents safety hazards to the navigation of vessels between 016.8 and 017.2, extending the entire width of the river. This safety zone is necessary to provide for the safety of the crew, spectators, and other users and vessels of the Osage River.

Discussion of Proposed Rule

The Coast Guard is proposing to establish a safety zone for all waters of the Osage River, Mile 016.8 to 017.2, extending the entire width of the river. Entry into, transiting through, or anchoring within this zone would be prohibited to all vessels and persons except participants and those persons and vessels specifically authorized by the Captain of the Port Upper Mississippi River. We are proposing an effective period from 10 p.m. until 10:30 p.m. CDT July 4, 2010. The Captain of the Port Upper Mississippi River will inform the public through broadcast notice to mariners of all safety zone changes and enforcement periods.

Regulatory Analyses

We developed this proposed rule after considering numerous statutes and executive orders related to rulemaking. Below we summarize our analyses based on 13 of these statutes or executive orders.

Regulatory Planning and Review

This proposed rule is not a significant regulatory action under section 3(f) of Executive Order 12866, Regulatory Planning and Review, and does not require an assessment of potential costs and benefits under section 6(a)(3) of that Order. The Office of Management and Budget has not reviewed it under that Order. It is not "significant" under the regulatory policies and procedures of the Department of Homeland Security (DHS). This rule would be in effect for only a short period of time during the fireworks display. Vessels that need to enter the safety zone may request permission to do so from the Captain of the Port Upper Mississippi River.

Small Entities

Under the Regulatory Flexibility Act (5 U.S.C. 601–612), we have considered whether this proposed rule would have a significant economic impact on a substantial number of small entities. The term "small entities" comprises small businesses, not-for-profit organizations that are independently owned and operated and are not dominant in their fields, and governmental jurisdictions with populations of less than 50,000.

The Coast Guard certifies under 5 U.S.C. 605(b) that this proposed rule would not have a significant economic impact on a substantial number of small entities. This rule will affect the following entities, some of which may be small entities, some of which may be small entities: the owners or operators of vessels intending to transit the Osage River, Mile 016.8 to 017.2 after 10 p.m. until 10:30 p.m. CDT on July 4. This safety zone will not have a significant economic impact on a substantial number of small entities for the following reason: (1) This rule would only be in effect for a limited period of time.

If you think that your business, organization, or governmental jurisdiction qualifies as a small entity and that this rule would have a significant economic impact on it, please submit a comment (*see* **ADDRESSES**) explaining why you think it qualifies and how and to what degree this rule would economically affect it.

Assistance for Small Entities

Under section 213(a) of the Small Business Regulatory Enforcement Fairness Act of 1996 (Pub. L. 104–121), we want to assist small entities in understanding this proposed rule so that they can better evaluate its effects on them and participate in the rulemaking. If the rule would affect your small business, organization, or governmental jurisdiction and you have questions concerning its provisions or options for compliance, please contact 1–888–REG–FAIR (1–888–734–3247). The Coast Guard will not retaliate against small entities that question or complain about this proposed rule or any policy or action of the Coast Guard.

Collection of Information

This proposed rule would call for no new collection of information under the Paperwork Reduction Act of 1995 (44 U.S.C. 3501–3520).

Federalism

A rule has implications for federalism under Executive Order 13132, Federalism, if it has a substantial direct effect on State or local governments and would either preempt State law or impose a substantial direct cost of compliance on them. We have analyzed this proposed rule under that Order and have determined that it does not have implications for federalism.

Unfunded Mandates Reform Act

The Unfunded Mandates Reform Act of 1995 (2 U.S.C. 1531–1538) requires Federal agencies to assess the effects of their discretionary regulatory actions. In particular, the Act addresses actions that may result in the expenditure by a State, local, or Tribal government, in the aggregate, or by the private sector of $100,000,000 (adjusted for inflation) or more in any one year. Though this proposed rule would not result in such an expenditure, we do discuss the effects of this rule elsewhere in this preamble.

Taking of Private Property

This proposed rule would not cause a taking of private property or otherwise have taking implications under Executive Order 12630, Governmental Actions and Interference with Constitutionally Protected Property Rights.

Civil Justice Reform

This proposed rule meets applicable standards in sections 3(a) and 3(b)(2) of Executive Order 12988, Civil Justice Reform, to minimize litigation, eliminate ambiguity, and reduce burden.

Protection of Children

We have analyzed this proposed rule under Executive Order 13045, Protection of Children from Environmental Health Risks and Safety Risks. This rule is not an economically significant rule and would not create an environmental risk to health or risk to safety that might disproportionately affect children.

Indian Tribal Governments

This proposed rule does not have Tribal implications under Executive Order 13175, Consultation and Coordination with Indian Tribal Governments, because it would not have a substantial direct effect on one or more Indian Tribes, on the relationship between the Federal Government and Indian Tribes, or on the distribution of power and responsibilities between the Federal Government and Indian Tribes.

Energy Effects

We have analyzed this proposed rule under Executive Order 13211, Actions Concerning Regulations That Significantly Affect Energy Supply, Distribution, or Use. We have determined that it is not a "significant energy action" under that order because it is not a "significant regulatory action" under Executive Order 12866 and is not likely to have a significant adverse effect on the supply, distribution, or use of energy. The Administrator of the Office of Information and Regulatory Affairs has not designated it as a significant energy action. Therefore, it does not require a Statement of Energy Effects under Executive Order 13211.

Technical Standards

The National Technology Transfer and Advancement Act (NTTAA) (15 U.S.C. 272 note) directs agencies to use voluntary consensus standards in their regulatory activities unless the agency provides Congress, through the Office of Management and Budget, with an explanation of why using these

standards would be inconsistent with applicable law or otherwise impractical. Voluntary consensus standards are technical standards (*e.g.,* specifications of materials, performance, design, or operation; test methods; sampling procedures; and related management systems practices) that are developed or adopted by voluntary consensus standards bodies.

This proposed rule does not use technical standards. Therefore, we did not consider the use of voluntary consensus standards.

Environment

We have analyzed this proposed rule under Department of Homeland Security Management Directive 023–01 and Commandant Instruction M16475.lD, which guide the Coast Guard in complying with the National Environmental Policy Act of 1969 (NEPA) (42 U.S.C. 4321–4370f), and have made a preliminary determination that this action is one of a category of actions that do not individually or cumulatively have a significant effect on the human environment. A preliminary environmental analysis checklist supporting this determination is available in the docket where indicated under **ADDRESSES**. This proposed rule involves the establishment of a safety zone. We seek any comments or information that may lead to the discovery of a significant environmental impact from this proposed rule.

List of Subjects in 33 CFR Part 165

Harbors, Marine safety, Navigation (water), Reporting and recordkeeping requirements, Security measures, Waterways.

For the reasons discussed in the preamble, the Coast Guard proposed to amend 33 CFR 165 as follows:

PART 165—REGULATER NAVIGATION AREAS AND LIMITED ACCESS AREAS

(1) The authority citation for part 165 continues to read as follows:

Authority: 33 U.S.C. 1226, 1231; 46 U.S.C. Chapter 701, 3306, 3703; 50 U.S.C. 191, 195; 33 CFR 1.05–1, 6.04–1, 6.04–6, and 160.5; Pub. L. 107–295, 116 Stat. 2064; Department of Homeland Security Delegation No. 0170.1.

(2) Add § 165.T08–0059 to read as follows:

§ 165.T08–0059 Safety Zone; Osage River, Mile 016.8 to 017.2.

(a) *Location.* The following area is a safety zone: all waters of the Osage River, Mile 016.8 to 017.2 extending the entire width of the waterway.

(b) *Effective date.* This rule is effective from 10 p.m. until 10:30 p.m. CDT on July 4, 2010.

(c) *Periods of Enforcement.* This rule will be enforced from 10 p.m. until 10:30 p.m. CDT on July 4, 2010. The Captain of the Port Upper Mississippi River will inform the public through broadcast notice to mariners of all safety zone changes and enforcement periods.

(d) *Regulations.* (1) In accordance with the general regulations in § 165.23 of this part, entry into this zone is prohibited unless authorized by the Captain of the Port Upper Mississippi River or a designated representative.

(2) Persons or vessels requiring entry into or passage through the zone must request permission from the Captain of the Port Upper Mississippi River or a designated representative. The Captain of the Port Upper Mississippi River representative may be contacted at (314) 269–2332.

(3) All persons and vessels must comply with the instruction of the Captain of the Port Upper Mississippi River or their designated representative. Designated Captain of the Port representatives include United States Coast Guard commissioned, warrant, and petty officers of the U.S. Coast Guard.

Dated: April 13, 2010.

S.L. Hudson,

Captain, U.S. Coast Guard, Captain of the Port Upper Mississippi River.

[FR Doc. 2010–12343 Filed 5–21–10; 8:45 am]

BILLING CODE 9110–04–P

DEPARTMENT OF DEFENSE

GENERAL SERVICES ADMINISTRATION

NATIONAL AERONAUTICS AND SPACE ADMINISTRATION

48 CFR Parts 4 and 52

[FAR Case 2009–027; Docket 2010-0091; Sequence 1]

RIN: 9000–AL60

Federal Acquisition Regulation; FAR Case 2009–027, Personal Identity Verification of Contractor Personnel

AGENCIES: Department of Defense (DoD), General Services Administration (GSA), and National Aeronautics and Space Administration (NASA).

ACTION: Proposed rule.

SUMMARY: The Civilian Agency Acquisition Council and the Defense Acquisition Regulations Council (Councils) are proposing to amend the Federal Acquisition Regulation (FAR) to provide additional regulatory coverage in Subpart 4.13 and in clause 52.204–9 to reinforce the requirement of collecting from contractors all forms of Government provided identification once they are no longer needed to support a contract.

DATES: Interested parties should submit written comments to the Regulatory Secretariat on or before July 23, 2010 to be considered in the formulation of a final rule.

ADDRESSES: Submit comments identified by FAR case 2009–027 by any of the following methods:

• *Regulations.gov*: *http://www.regulations.gov*. Submit comments via the Federal eRulemaking portal by inputting "FAR Case 2009–027" under the heading "Enter Keyword or ID" and selecting "Search". Select the link "Submit a Comment" that corresponds with "FAR Case 2009–027". Follow the instructions provided at the " Submit a Comment" screen. Please include your name, company name (if any), and "FAR Case 2009–027" on your attached document.

• Fax: 202–501–4067.

• Mail: General Services Administration, Regulatory Secretariat (MVCB), 1800 F Street, NW., Room 4041, ATTN: Hada Flowers, Washington, DC 20405.

Instructions: Please submit comments only and cite FAR case 2009–027, in all correspondence related to this case. All comments received will be posted without change to *http://www.regulations.gov*, including any personal and/or business confidential information provided.

FOR FURTHER INFORMATION CONTACT Ms. Suzanne Neurauter, Procurement Analyst, at (202) 219–0310 for clarification of content. For information pertaining to status or publication schedules, contact the Regulatory Secretariat at (202) 501–4755. Please cite FAR case 2009–027.

SUPPLEMENTARY INFORMATION:

A. Background

Department of Defense Inspector General Audit Report No. D02009–005, titled Controls Over the Contractor Common Access Card (CAC) Life Cycle, was performed to determine whether Government controls were in place over contractor CACs. A CAC is the DoD term for a Personal Identity Verification (PIV) card. A PIV card is required in order to gain access to a Federal facility. The most prevalent issue of the audit report, and the one that the Councils are undertaking with this case, was that the

CACs were not adequately accounted for after contract performance.

The Councils are proposing to amend the FAR by inserting new paragraphs (d)(1) and (2) under section 4.1301, Policy. Paragraph (d)(1) will provide policy on recovering PIVs. The text in paragraph (d)(1) states that agency procedures shall ensure that Government contractors account for all forms of Government-provided identification issued to Government contractors under a contract, and return such identification to the issuing agency at the earliest of any of the following, unless otherwise determined by the agency: when no longer needed for contract performance; upon completion of a contractor employee's employment; upon contract completion or termination. The text in paragraph (d)(2) states that the contracting officer may delay final payment under a contract if the contractor fails to comply with these requirements.

The Councils are also proposing to modify FAR clause 52.204–9, Personal Identity Verification of Contractor Personnel to be consistent with Part 4.

This is not a significant regulatory action and, therefore, was not subject to review under Section 6(b) of Executive Order 12866, Regulatory Planning and Review, dated September 30, 1993. This rule is not a major rule under 5 U.S.C. 804.

B. Regulatory Flexibility Act

The Councils do not expect this proposed rule to have a significant economic impact on a substantial number of small entities within the meaning of the Regulatory Flexibility Act, 5 U.S.C. 601, *et seq.*, because the requirements of the actions required and the clause are not significantly burdensome. Currently, it is a common business practice to have procedures in place to revoke/return access cards when no longer in use by the contractor. An Initial Regulatory Flexibility Analysis has, therefore, not been performed. We invite comments from small businesses and other interested parties. The Councils will consider comments from small entities concerning the affected FAR Parts 4 and 52 in accordance with 5 U.S.C. 610. Interested parties must submit such comments separately and should cite 5 U.S.C. 601, *et seq.* (FAR case 2009–027), in correspondence.

C. Paperwork Reduction Act

The Paperwork Reduction Act does not apply because the proposed changes to the FAR do not impose information collection requirements that require the approval of the Office of Management and Budget under 44 U.S.C. Chapter 35, *et seq.*

List of Subjects in 48 CFR Parts 4 and 52

Government procurement.

Dated: May 17, 2010.

Edward Loeb,

Acting Director, Acquisition Policy Division.

Therefore, DoD, GSA, and NASA propose amending 48 CFR parts 4 and 52 as set forth below:

1. The authority citation for 48 CFR parts 4 and 52 continues to read as follows:

AUTHORITY: 40 U.S.C. 121(c); 10 U.S.C. chapter 137; and 42 U.S.C. 2473(c).

PART 4—ADMINISTRATIVE MATTERS

2. Amend section 4.1301 by adding paragraphs (d)(1) and (d)(2) to read as follows:

4.1301 Policy.

* * * * *

(d)(1) Agency procedures shall ensure that Government contractors account for all forms of Government-provided identification issued to Government contractors under a contract, *i.e.*, the Personal Identity Verification (PIV) cards or other similar badges, and shall ensure that contractors return such identification to the issuing agency as soon as any of the following occurs, unless otherwise determined by the agency:

(i) When no longer needed for contract performance.

(ii) Upon completion of a contractor employee's employment.

(iii) Upon contract completion or termination.

(2) The contracting officer may delay final payment under a contract if the contractor fails to comply with these requirements.

PART 52—SOLICITATION PROVISIONS AND CONTRACT CLAUSES

3. Amend section 52.204–9 by:

a. Revising the date of the clause;

b. Redesignating paragraph (b) as paragraph (d), and adding new paragraphs (b) and (c); and revising the newly designated paragraph (d).

The added and revised text reads as follows:

52.204–9 Personal Identity Verification of Contractor Personnel.

* * * * *

PERSONAL IDENTITY VERIFICATION OF CONTRACTOR PERSONNEL (DATE)

(b) The Contractor shall account for all forms of Government-provided identification issued to the Contractor under this contract. The contractor shall return such identification to the issuing agency at the earliest of any of the following, unless otherwise determined by the Government:

(1) When no longer needed for contract performance.

(2) Upon completion of the Contractor employee's employment.

(3) Upon contract completion or termination.

(c) The contracting officer may delay final payment under a contract if the contractor fails to comply with these requirements.

(d) The Contractor shall insert the substance of this clause, including this paragraph (d), in all subcontracts when the subcontractor is required to have routine physical access to a Federally-controlled facility and/or routine access to a Federally-controlled information system.

(End of clause)

[FR Doc. 2010–12334 Filed 5–21–10; 8:45 am]

BILLING CODE 6820–EP–S

DEPARTMENT OF ENERGY

48 CFR Parts 904, 952 and 970

RIN 1991–AB85

Acquisition Regulation: Access to and Ownership of Records

AGENCY: Department of Energy.

ACTION: Notice of proposed rulemaking.

SUMMARY: The Department of Energy (DOE) is proposing to amend the Department of Energy Acquisition Regulation (DEAR) to revise the applicability and the policies and procedures involving the access to and ownership of records. Much work at DOE facilities is performed by contractor and subcontractor personnel and involves hazardous materials or the possibility of exposure to radioactive materials. It is necessary for the contractors and subcontractors to maintain extensive records for the Government involving these workers and processes, in particular, personnel; facility; occupational safety and health; environment; and medical records. DOE is proposing to amend these clauses for consistent inclusion in all applicable contracts, not just management and operating (M&O) contracts, based on the type of work being performed, to ensure preservation and Government ownership of records. Additionally, the proposed revisions address

inconsistencies relating to DOE contractor and subcontractor efforts in managing records in accordance with DOE retention requirements. The proposed revisions are being made to establish consistent records maintenance, retention, and disposal; and to ensure certain records generated on groups of individuals in the performance of the contract are maintained as DOE Privacy Act Systems of Records.

DATES: Written comments on the proposed rulemaking must be received on or before close of business June 23, 2010.

ADDRESSES: This proposed rule is available and comments may be submitted to the *Federal Electronic Rulemaking Portal* at *http://www.regulations.gov*. Comments may also be submitted electronically to *Richard.Langston@hq.doe.gov* Comments may be mailed to: Richard Langston, Procurement Policy Analyst; MA–61; U. S. Department of Energy; 1000 Independence Avenue, SW.; Washington, DC 20585.

FOR FURTHER INFORMATION CONTACT: Richard Langston at 202–287–1339 or *Richard.Langston@hq.doe.gov*.

SUPPLEMENTARY INFORMATION:

I. Background
II. Section-by-Section Analysis
III. Procedural Requirements
A. Review Under Executive Order 12866
B. Review Under Executive Order 12988
C. Review Under the Regulatory Flexibility Act
D. Review Under the Paperwork Reduction Act
E. Review Under the National Environmental Policy Act
F. Review Under Executive Order 13132
G. Review Under the Unfunded Mandates Reform Act of 1995
H. Review Under the Treasury and General Government Appropriations Act, 1999
I. Review Under Executive Order 13211
J. Review Under the Treasury and General Government Appropriations Act, 2001
K. Approval by the Office of the Secretary of Energy

I. Background

The Access to and Ownership of Records clause, at 48 CFR 970.5204–3, raises a number of concerns, including the lack of inclusion of the clause in non-M&O contracts; records systems identified as contractor-owned may not be operated and records may not be maintained appropriately as Privacy Act Systems of Records and for the required retention period; and the need for the Government to maintain personnel; facility; occupational safety and health; environment; and medical records on contractors and subcontractors long-term based on NARA-approved DOE Records Disposition Schedules and to support the Energy Employees Occupational Illness Compensation Program Act (EEOICPA), the DOE Former Worker Medical Screening Program (FWP) and other records requests.

In light of the fact that most of the DOE sites have been in existence for as many as 60 years, there are inherent variations in quality, complexity, and completeness of recordkeeping practices. While DOE cannot recreate records that no longer exist, it is vital that DOE preserve ownership of, and access to, records in accordance with laws and regulations. In particular preservation of records that are vital to the safety, health and well being of past, present and future workers and the surrounding communities.

The proposed revisions address inclusion of the clause in all applicable contracts, not just M&O contracts, based on the type of work being performed, provides clarity to the DOE contractor and subcontractor on their records management responsibilities, in particular the maintenance, retention, disposition, and Government ownership of records [*see* 44 U.S.C. chapters 21, 29, 31, 33, and 35, and 36 CFR chapter 12, subchapter B], including operating and maintaining records as DOE Privacy Act Systems of Records [FAR 52–224–2]; ensures preservation and ownership of personnel, facility; occupational safety and health, environment, medical records [*see* 10 CFR part 850, 10 CFR part 851, 29 CFR part 1904, and 29 CFR part 1910] and facility records required for decision-making and in support of the administration of the EEOICPA allows for DOE to identify and contact individuals in the future for participation in the FWP; and to meet other future records requests.

These revisions will also serve to stress the importance of complete and accurate documentation and proper recordkeeping to adequately document Government funded activities, preserve institutional memory, protect the legal and financial rights of the Government, and preserve worker and facility records to ensure records are available to the Government when needed.

II. Section-by-Section Analysis

The Department proposes to amend the DEAR as follows.

1. Subpart 904.7—The clause applicability specification for Contractor Records Retention at 904.702 has been revised to update the name of the Integration of Environment, Safety and Health into Work Planning and Execution clause, delete the reference to the obsolete Nuclear Safety clause, add a requirement to include the Access to and Ownership of Records clause, and specifically reference the "DOE Records Disposition Schedules" in applicable DOE Directives. These changes are being made to ensure that all contracts that generate records include the requirements of the Access to and Ownership of Records clause to ensure Government ownership and access to these records and to establish consistent records management practices in the retention of records.

2. Section 952.223–75—DOE added language to the preservation of individual occupational radiation exposure records that requires such records be operated and maintained by contractors as a DOE Privacy Act Systems of Records (*i.e.,* as DOE–35 Personnel Radiation Exposure Records) and emphasizes the requirement to maintain these records in accordance with the NARA-approved DOE Records Disposition Schedules.

3. Section 970.0407–1–3—The prescription of the Access to and Ownership of Records clause has been expanded to require inclusion in more than just M&O contracts, but must also be included in contracts that contain the Integration of Environment, Safety, and Health into Work Planning and Execution clause at 48 CFR 952.223–71, and the Radiation Protection and Nuclear Criticality clause at 48 CFR 952.223–72. This change is made to ensure that the Access to and Ownership of Records clause is included consistently in all applicable contracts based on the type of work being performed (*e.g.,* work that exposes personnel to hazardous material, radiation or long-term health issues), not just M&O contracts. In addition, the FAR Privacy Act clause at 48 CFR 52.224–2 must also be included in all contracts that include the Access to and Ownership of Records clause as records systems are to be operated, and records generated on groups of individuals in the performance of the contract are to be maintained by the contractor as a DOE Privacy Act Systems of Records.

4. Section 970.5204–3(a)—Language was added to require contractors to operate and maintain certain records classified as Government-owned records as DOE Privacy Act Systems of Records as determined by the Contracting Officer. The Contracting Officer will tailor the list of Government-owned records to be operated and maintained by the contractor as Privacy Act Systems of Records using DOE's most recent compilation of the Privacy Act Systems of Records (*see* 74 FR 994, January 9, 2009).

5. Section 970.5204–3(b)(1)—The words "non-contract related" were added before the words "medical/health-related records" to make it clear that those personnel medical records that are not collected by the contractor in the direct performance of its contract (*i.e.,* corporate wellness programs) could be considered separate and distinct from contract-related personnel medical records.

6. Section 970.5204–3(b)(2)—The words "internal corporate governance records" was added to the list of confidential contractor financial information to make it clear that these types of records should be considered to be confidential contractor records.

7. Section 970.5204–3(c)—Language was added to clarify the disposition of both Government-owned and contractor-owned records at contract completion or termination. An option was added to allow contractors to deliver "original" records to the Government in lieu of copying these records with assurance that the contractor will have rights to access and copy the records as needed.

8. Section 970.5204–3(e)—The applicability of the Access to and Ownership of Records clause was modified to make it clear that the records maintained by the contractor, whether they be Government-owned or contractor-owned, include all records in the possession of the contractor regardless of the date of origin and include those records acquired from a predecessor contractor. Therefore, this paragraph has been updated to not specify just particular paragraphs but the entire clause.

9. Section 970.5204–3(f)—The title of this paragraph has been modified to read "Records maintenance and retention" and expanded to more specify the contractors records management responsibilities for the creation, maintenance, and disposition of records in accordance with applicable federal laws, regulations and DOE Directives. The proposed revision provides clear direction to the contractor and subcontractor on their records management responsibilities, in particular maintenance, disposition and ownership of records. The language was also revised to clearly link retention of records to the DOE Records Disposition Schedules and DOE removed language that singles out individual radiation exposure records as such records will be operated and maintained by the contractor as Government-owned DOE Privacy Act Systems of Records.

10. Section 970.5204–3(g)—This paragraph is revised to eliminate the $2 Million threshold for flow down of the Access to and Ownership of Records clause as its applicability is more appropriately determined by the nature of the work not the cost of the contract (i.e., subcontracts in which contract performance exposes personnel to hazardous material, radiation, or long-term health issues). Therefore, this paragraph has been modified and expanded to require inclusion in subcontracts that contain the Integration of Environment, Safety and Health into work Planning and Execution clause at 952.223–71 or the Radiation Protection and Nuclear Criticality clause at 952.223–72, consistent with the prescription for prime contracts in DEAR 970.0407–1–3, and the contractor records retention applicability in DEAR 904.702. This paragraph has also been modified to include flow down of the Privacy Act clause into subcontracts.

III. Procedural Requirements

A. Review Under Executive Order 12866

This regulatory action has been determined not to be a significant regulatory action under Executive Order 12866, Regulatory Planning and Review, 58 FR 51735, October 4, 1993. Accordingly, this rule is not subject to review under the Executive Order by the Office of Information and Regulatory Affairs (OIRA) within the Office of Management and Budget.

B. Review Under Executive Order 12988

With respect to the review of existing regulations and the promulgation of new regulations, Section 3(a) of Executive Order 12988, Civil Justice Reform, 61 FR 4729 (February 7, 1996), imposes on executive agencies the general duty to adhere to the following requirements: (1) Eliminate drafting errors and ambiguity; (2) write regulations to minimize litigation; (3) provide a clear legal standard for affected conduct rather than a general standard; and (4) promote simplification and burden reduction. With regard to the review required by Section 3(a), Section 3(b) of Executive Order 12988 specifically requires that executive agencies make every reasonable effort to ensure that the regulation: (1) Clearly specifies the preemptive effect, if any; (2) clearly specifies any effect on existing Federal law or regulation; (3) provides a clear legal standard for affected conduct while promoting simplification and burden reduction; (4) specifies the retroactive effect, if any; (5) adequately defines key terms; and (6) addresses other important issues affecting clarity and general draftsmanship under any guidelines issued by the Attorney General. Section 3(c) of Executive Order 12988 requires executive agencies to review regulations in light of applicable standards in section 3(a) and section 3(b) to determine whether they are met or that it is unreasonable to meet one or more of them. DOE has completed the required review and determined that, to the extent permitted by law, these proposed regulations meet the relevant standards of Executive Order 12988.

C. Review Under the Regulatory Flexibility Act

This proposed rule has been reviewed under the Regulatory Flexibility Act, 5 U.S.C. 601 *et seq.,* which requires preparation of an initial regulatory flexibility analysis for any rule that must be proposed for public comment and is likely to have a significant economic impact on a substantial number of small entities. The proposed rule would not have a significant economic impact on small entities because it imposes no significant burdens.

Accordingly, DOE certifies that this proposed rule would not have a significant economic impact on a substantial number of small entities, and, therefore, no regulatory flexibility analysis has been prepared.

D. Review Under Paperwork Reduction Act

This rulemaking contains no new information collection or recordkeeping requirements. Existing information collections imposed by the Department of Energy Acquisition Regulation are covered by OMB Control Number 1910–4100.

E. Review Under the National Environmental Policy Act

DOE has concluded that promulgation of this proposed rule falls into a class of actions which would not individually or cumulatively have significant impact on the human environment, as determined by DOE's regulations (10 CFR part 1021, subpart D) implementing the National Environmental Policy Act (NEPA) of 1969 (42 U.S.C. 4321 *et seq.*). Specifically, this proposed rule is categorically excluded from NEPA review because the amendments to the DEAR would be strictly procedural (categorical exclusion A6). Therefore, this proposed rule does not require an environmental impact statement or environmental assessment pursuant to NEPA.

F. Review Under Executive Order 13132

Executive Order 13132 (64 FR 43255, August 4, 1999) imposes certain requirements on agencies formulating

and implementing policies or regulations that preempt state law or that have federalism implications. Agencies are required to examine the constitutional and statutory authority supporting any action that would limit the policymaking discretion of the states and carefully assess the necessity for such actions. DOE has examined today's proposed rule and has determined that it does not preempt state law and does not have a substantial direct effect on the states, on the relationship between the national government and the states, or on the distribution of power and responsibilities among the various levels of government. No further action is required by Executive Order 13132.

G. Review Under the Unfunded Mandates Reform Act of 1995

The Unfunded Mandates Reform Act of 1995 (Pub. L. 104–4) requires a federal agency to perform a detailed assessment of costs and benefits of any rule imposing a federal mandate with costs to state, local or tribal governments, or to the private sector, of $100 million or more in any single year. This rulemaking does not impose a federal mandate on state, local or tribal governments or on the private sector.

H. Review Under the Treasury and General Government Appropriations Act, 1999

Section 654 of the Treasury and General Government Appropriations Act, 1999 (Pub. L. 105–277), requires federal agencies to issue a Family Policymaking Assessment for any rule or policy that may affect family well-being. This rule will have no impact on family well being.

I. Review Under Executive Order 13211

Executive Order 13211, Actions Concerning Regulations That Significantly Affect Energy Supply, Distribution, or Use (66 FR 28355, May 22, 2001), requires federal agencies to prepare and submit to the OIRA, OMB, a Statement of Energy Effects for any significant energy action. A "significant energy action" is defined as any action by an agency that promulgates or is expected to lead to promulgation of a final rule, and that: (1) Is a significant regulatory action under Executive Order 12866, or any successor order; and (2) is likely to have a significant adverse effect on the supply, distribution, or use of energy, or (3) is designated by the Administrator of OIRA as a significant energy action. For any significant energy action, the agency must give a detailed statement of any adverse effects on energy supply, distribution, or use should the proposal be implemented, and of reasonable alternatives to the action and their expected benefits on energy supply, distribution, and use.

This proposed rule is not a significant energy action. Accordingly, DOE has not prepared a Statement of Energy Effects.

J. Review Under the Treasury and General Government Appropriations Act, 2001

The Treasury and General Government Appropriations Act, 2001, 44 U.S.C. 3516, note, provides for agencies to review most disseminations of information to the public under implementing guidelines established by each agency pursuant to general guidelines issued by OMB. OMB's guidelines were published at 67 FR 8452 (February 22, 2002), and DOE's guidelines were published at 67 FR 62446 (October 7, 2002). DOE has reviewed today's notice under the OMB and DOE guidelines and has concluded that it is consistent with applicable policies in those guidelines.

K. Approval by the Office of the Secretary of Energy

The Office of the Secretary of Energy has approved issuance of this proposed rule.

List of Subjects in 48 CFR Parts 904, 952 and 970

Government procurement.

Issued in Washington, DC, on May 18, 2010.

Patrick M. Ferraro,

Acting Director, Office of Procurement and Assistance Management, Office of Management, Department of Energy.

Joseph F. Waddell,

Acting Director, Office of Acquisition and Supply Management, National Nuclear Security Administration.

For the reasons set out in the preamble, DOE proposes to amend chapter 9 of Title 48 of the Code of Federal Regulations as set forth below:

PART 904—ADMINISTRATIVE MATTERS

1. The authority citations for parts 904 and 952 continue to read as follows:

Authority: 42 U.S.C. 7101, *et seq.* and 50 U.S.C. 2401, *et seq.*

2. Revise section 904.702, to read as follows:

904.702 Applicability.

(b) Contracts containing the Integration of Environment, Safety and Health into Work Planning and Execution clause at 952.223–71, or the Radiation Protection and Nuclear Criticality clause at 952.223–72 must also include the Preservation of Individual Occupational Radiation Exposure Records clause at 952.223–75, and the Access to and Ownership of Records clause at 970.5204–3, which will necessitate retention of records in accordance with DOE Records Disposition Schedules contained in applicable DOE Directives, rather than those found at FAR Subpart 4.7.

PART 952—SOLICITATION PROVISIONS AND CONTRACT CLAUSES

3. In section 952.223–75, the clause paragraph is revised to read as follows:

952.223–75 Preservation of individual occupational radiation exposure records.

* * * * *

Individual occupational radiation exposure records generated in the performance of work under this contract shall be maintained by the contractor and related contractor record systems shall be operated as DOE Privacy Act Systems of Records, in accordance with the NARA-approved DOE Records Disposition Schedules contained in applicable DOE Directives.

PART 970—DOE MANAGEMENT AND OPERATING CONTRACTS

4. The authority citation for part 970 continues to read as follows:

Authority: 42 U.S.C. 2201; 2282a; 2282b; 2282c; 42 U.S.C. 7101, *et seq.*; 50 U.S.C. 2401, *et seq.*

5. Revise section 970.0407–1–3 to read as follows:

970.0407–1–3 Contract clause.

The contracting officer shall insert the clauses at 48 CFR 970.5204–3, Access to and Ownership of Records and 48 CFR 52.224–2, Privacy Act, including the listing of pertinent Privacy Act Systems of Records, in management and operating contracts and all contracts that contain the Integration of Environment, Safety, and Health into Work Planning and Execution clause at 48 CFR 952.223–71 or the Radiation Protection and Nuclear Criticality clause at 48 CFR 952.223–72.

6. Amend 970.5204–3 by:

a. Revising the clause date;

b. Revising paragraph (a);

c. Adding in paragraph (b)(1), the words "non contract related" before the words "medical/health-related records)" and removing the words "described by the contract as being maintained in" and adding in its place, the words "operated and maintained by the contractor in a DOE" in the last sentence;

d. Adding in paragraph (b)(2) the words "internal corporate governance records," after the word "information" in the first sentence;

e. Revising paragraphs (c), (e), (f) and (g).

The revisions read as follows:

970.5204–3 Access to and ownership of records.

* * * * *

Access to and Ownership of Records (XXX 20XX)

(a) *Government-owned records.* Except as provided in paragraph (b) of this clause, all records acquired or generated by the contractor in its performance of this contract, shall be the property of the Government. The contractor, where applicable, shall maintain DOE Privacy Act Systems of Records in accordance with requirements of FAR 52.224–2 "Privacy Act."

The contractor shall operate and maintain the following DOE Privacy Act Systems of Records: [The Contracting Officer shall insert the list of Government-owned records to be operated and maintained by the contractor as a DOE Privacy Act Systems of Records using DOE's most recent compilation of its Privacy Act Systems of Records.]

* * * * *

(c) *Contract completion or termination.* Upon contract completion or termination, the contractor shall ensure final disposition of all Government-owned records to a Federal Record Center, the National Archives and Records Administration, to a successor contractor, its designee, or other destinations, as directed by the Contracting Officer. Upon the request of the Government, the contractor shall provide either the original contractor-owned records or copies of the records identified in paragraph (b) of this clause, to DOE or its designees, including successor contractors. Upon delivery, title to such records shall vest in DOE or its designees, and such records shall be protected in accordance with applicable federal laws (including the Privacy Act) as appropriate. If the contractor chooses to provide its original contractor-owned records to the Government or its designee, the contractor shall retain future access rights to copy such records.

* * * * *

(e) *Applicability.* This clause applies to all records maintained by the contractor without regard to the date or origination of such records including all records acquired from a predecessor contractor.

(f) *Records maintenance and retention.* Contractor shall create, maintain, safeguard, and disposition records in accordance with 36 CFR, Chapter 12, Subchapter B and the National Archives and Records Administration (NARA)-approved records disposition schedules (DOE Records Disposition Schedules), contained in applicable DOE Directives. Records retention standards are applicable for all classes of records described therein, whether or not the records are owned by the Government or the contractor. The Government may waive application of these records disposition schedules, if, upon termination or completion of the contract, the Government exercises its right under paragraph (c) of this clause to obtain copies and delivery of records described in paragraphs (a) and (b) of this clause.

(g) *Subcontracts.* The contractor shall include the requirements of this clause and the Privacy Act clause of FAR 52.224–2 (pursuant to FAR 24.104) in all subcontracts that contain the Integration of Environment, Safety and Health into Work Planning and Execution clause at 952.223–71 or, the Radiation Protection and Nuclear Criticality clause at 952.223–72.

(End of Clause)

[FR Doc. 2010–12404 Filed 5–21–10; 8:45 am]

BILLING CODE 6450–01–P

Notices

Federal Register
Vol. 75, No. 99
Monday, May 24, 2010

This section of the FEDERAL REGISTER contains documents other than rules or proposed rules that are applicable to the public. Notices of hearings and investigations, committee meetings, agency decisions and rulings, delegations of authority, filing of petitions and applications and agency statements of organization and functions are examples of documents appearing in this section.

DEPARTMENT OF AGRICULTURE

Forest Service

Information Collection; Financial Information Security Request Form

AGENCY: Forest Service, USDA.

ACTION: Notice; Request for Comment.

SUMMARY: In accordance with the Paperwork Reduction Act of 1995, the Forest Service is seeking comments from all interested individuals and organizations on the extension with revision of a currently approved information collection; Financial Information Security Request Form.

DATES: Comments must be received in writing on or before July 23, 2010 to be assured of consideration. Comments received after that date will be considered to the extent practicable.

ADDRESSES: Comments concerning this notice should be addressed to Financial Management, Mail Stop 1149, Forest Service, USDA, 1400 Independence Ave., SW., Washington, DC 20250–1149. Comments also may be submitted via e-mail to: *vsweetney@fs.fed.us.*

The public may inspect comments received at USDA Forest Service, Rosslyn Plaza, Building C, 1601 N. Kent Street, RPC–7, Arlington, VA during normal business hours. Visitors are encouraged to call ahead to (703)-605–4767 to facilitate entry to the building.

FOR FURTHER INFORMATION CONTACT: Vanetta Sweetney, Financial Management, (703)–605–4767. Individuals who use telecommunications for the deaf (TDD) may call the Federal Relay Service (FRS) at (800)–877–8339, between 8 a.m. and 8 p.m., Eastern Standard Time, Monday through Friday.

SUPPLEMENTARY INFORMATION:

Title: Financial Information Security Request Form.

OMB Number: 0596–0204.

Expiration Date of Approval: 12/31/10.

Type of Request: Extension with Revision.

Abstract: The majority of the Forest Service's financial records are in databases stored at the National Finance Center (NFC). The Forest Service uses employees and contractors to maintain these financial records. The employees and contractors must have access to NFC to perform their duties.

The Forest Service uses an electronic form FS–6500–214, Financial Information Security Request Form, to apply to NFC for access for a specific employee or contractor. Due to program management decisions and budget constraints, it has been determined that contractors will need to complete and submit the form.

The contractor and the Forest Service Lotus Notes Database provide the information necessary to complete form FS–6500–214. The contractor verifies completion of two courses within the last year: Privacy Act Basics and IT (Information Technology) Security. The contractor then enters the Lotus Notes short name assigned by the Forest Service. Using the Lotus Notes short name, the screen is populated with information that the contractor can change if incorrect. The information includes: name, work e-mail, work telephone number, and job title. The contractor checks the box for a non-federal employee and provides the expiration date of the contract. The contractor then selects the databases and actions needed. Based on the database(s) selected, the contractor provides additional information regarding the financial systems, work location, access scope, etc. Once the form is submitted to the client security officer, a one-page agreement automatically prints, which the contractor and client security officer sign. The agreement is a certification statement that acknowledges the contractor's recognition of the sensitive nature of the information and agrees to use the information only for authorized purposes. The information collected is shared with those managing or overseeing the financial systems used by the Forest Service; this includes auditors.

Estimate of Annual Burden: 10 minutes.

Type of Respondents: Contracted employees.

Estimated Annual Number of Respondents: 50.

Estimated Annual Number of Responses per Respondent: 3.

Estimated Total Annual Burden on Respondents: 150 minutes.

Comment is invited on: (1) Whether this collection of information is necessary for the stated purposes and the proper performance of the functions of the Agency, including whether the information will have practical or scientific utility; (2) the accuracy of the Agency's estimate of the burden of the collection of information, including the validity of the methodology and assumptions used; (3) ways to enhance the quality, utility, and clarity of the information to be collected; and (4) ways to minimize the burden of the collection of information on respondents, including the use of automated, electronic, mechanical, or other technological collection techniques or other forms of information technology.

All comments received in response to this notice, including names and addresses when provided, will be a matter of public record. Comments will be summarized and included in the request for Office of Management and Budget approval.

Dated: May 17, 2010.

Thelma J. Strong,

Acting Associate Deputy Chief, Business Operations.

[FR Doc. 2010–12336 Filed 5–21–10; 8:45 am]

BILLING CODE 3410–11–P

DEPARTMENT OF AGRICULTURE

Forest Service

Information Collection; Pre-Decisional Objection Process for Hazardous Fuel Reduction Projects Authorized by the Healthy Forest Restoration Act of 2003

AGENCY: Forest Service, USDA.

ACTION: Notice; Request for Comment.

SUMMARY: In accordance with the Paperwork Reduction Act of 1995, the Forest Service is seeking comments from all interested individuals and organizations on the extension, with no revision, of a currently approved information collection, OMB 0596–0172—Pre-Decisional Objection Process for Hazardous Fuel Reduction Projects Authorized by the Healthy Forest Restoration Act of 2003.

DATES: Comments must be received in writing on or before July 23, 2010 to be assured of consideration. Comments received after that date will be considered to the extent practicable.

ADDRESSES: Comments concerning this notice should be addressed to Forest Service, USDA, Assistant Director for Appeals and Litigation, Ecosystem Management Coordination, Mail Stop 1104, 1400 Independence Avenue, SW., Washington, DC 20250–1104. Comments also may be submitted via e-mail to *dbeighley@fs.fed.us.*

The public may inspect comments received at the Ecosystem Management Coordination Office, 201 14th St., SW., Washington, DC, during normal business hours. Visitors are encouraged to call ahead to 202–205–0895 to facilitate entry into the building.

FOR FURTHER INFORMATION CONTACT: Deb Beighley, Ecosystem Management Coordination, at 202–205–1277 or e-mail to *dbeighley@fs.fed.us.* Individuals who use telecommunication devices for the deaf (TDD) may call the Federal Relay Service (FRS) at 800–877–8339, between 8 a.m. and 8 p.m., Eastern Standard time, Monday through Friday.

SUPPLEMENTARY INFORMATION:

Title: Pre-Decisional Objection Process for Hazardous Fuel Reduction Projects Authorized by the Healthy Forest Restoration Act of 2003.

OMB Number: 0596–0172.

Expiration Date of Approval: December 31, 2010.

Type of Request: Extension with no Revision.

Abstract: The information required by Section 105 of the Healthy Forests Restoration Act of 2003 is the minimum necessary for an individual or organization to object to an authorized hazardous fuel reduction project on National Forest System land. An objector must provide, in writing, their name, mailing address, and phone number (if available); the name of the project for which they are filing an objection, the name and title of the Responsible Official and the Forest Service unit on which the proposed project will be implemented; and the specific changes in the authorized project they seek as well as the rationale for those changes. The Reviewing Officer must review the objection(s) and relevant information and then respond to the objector(s) in writing. Objections may be submitted in hard copy or by email, and no forms are associated with this information collection.

Estimate of Annual Burden: 8 hours per respondent.

Type of Respondents: Interested and affected individuals, organizations, and governmental units who participate in the planning process for projects on National Forest System lands.

Estimated Annual Number of Respondents: 121.

Estimated Annual Number of Responses per Respondent: 1.

Estimated Total Annual Burden on Respondents: 968 hours.

Comment Is Invited

Comment is invited on: (1) Whether this collection of information is necessary for the stated purposes and the proper performance of the functions of the Agency, including whether the information will have practical or scientific utility; (2) the accuracy of the Agency's estimate of the burden of the collection of information, including the validity of the methodology and assumptions used; (3) ways to enhance the quality, utility, and clarity of the information to be collected; and (4) ways to minimize the burden of the collection of information on respondents, including the use of automated, electronic, mechanical, or other technological collection techniques or other forms of information technology.

All comments received in response to this notice, including names and addresses when provided, will be a matter of public record. Comments will be summarized and included in the submission request toward Office of Management and Budget approval.

Dated: May 14, 2010.

Gloria Manning,

Associate Deputy Chief, NFS.

[FR Doc. 2010–12335 Filed 5–21–10; 8:45 am]

BILLING CODE 3410–11–P

DEPARTMENT OF AGRICULTURE

Rural Utilities Service

RIN 0572–ZA01

Broadband Initiatives Program

AGENCY: Rural Utilities Service, Department of Agriculture.

ACTION: Notice of Extension of filing Public Notice Requests on Pending Round Two BIP Applications and of the Application Window for Request for Proposals.

SUMMARY: Due to emergency maintenance issues on May 14, 2010, the Rural Utilities Service (RUS) is extending, by one day, the deadline for submitting Public Notice Requests (PNRs) on pending applications filed under Second Round Notice of Funds Availability (Second Round NOFA) for the Broadband Initiatives Program (BIP), published in the **Federal Register** at 75 FR 3820 (January 22, 2010). Such technical issues also affected the application window for satellite, rural library broadband, and technical assistance projects under BIP's Request for Proposals (RFP), published in the **Federal Register** at 75 FR 25185 (May 7, 2010). As a result, PNRs on pending Second Round NOFA applications must be filed by May 24, 2010, at 11:59 p.m. Central Time (CT); and applications for satellite, rural library broadband, and technical assistance projects must be postmarked by June 8, 2010.

Contact Information: For general inquiries regarding BIP, contact David J. Villano, Assistant Administrator Telecommunications Program, Rural Utilities Service, U.S. Department of Agriculture (USDA), e-mail: *bip@wdc.usda.gov,* telephone: (202) 690–0525.

Dated: May 19, 2010.

Jessica Zufolo,

Acting Administrator, Rural Utilities Service.

[FR Doc. 2010–12399 Filed 5–21–10; 8:45 am]

BILLING CODE P

DEPARTMENT OF AGRICULTURE

Natural Resources Conservation Service

Magma Flood Retarding Structure (FRS) Supplemental Watershed Plan, Pinal County, AZ

AGENCY: Natural Resources Conservation Service.

ACTION: Notice of a Finding of No Significant Impact.

SUMMARY: Pursuant to Section 102(2)(C) of the National Environmental Policy Act of 1969; the Council on Environmental Quality Regulations (40 CFR part 1500); and the Natural Resources Conservation Service (NRCS) Regulations (7 CFR part 650); the Natural Resources Conservation Service, U.S. Department of Agriculture, gives notice that an environmental impact statement is not being prepared for the Magma Flood Retarding Structure (FRS) Supplemental Watershed Plan, Pinal County, Arizona.

FOR FURTHER INFORMATION CONTACT: David L. McKay, State Conservationist, USDA–NRCS, 230 North First Avenue, Suite 509, Phoenix, Arizona 85003, telephone (602) 280–8801.

SUPPLEMENTARY INFORMATION: The environmental assessment of this federally assisted action indicates that the project will not cause significant local, regional, or national impacts on the environment. Based on evidence

presented, David L. McKay, State Conservationist, has determined that the preparation and review of an environmental impact statement are not needed for this project.

The project proposes to rehabilitate the Magma FRS to provide for continued flood protection for a portion of the Town of Florence and surrounding areas, while meeting NRCS and State of Arizona safety and performance standards.

The Notice of a Finding of No Significant Impact (FONSI) has been forwarded to the Environmental Protection Agency and to various Federal, State, and local agencies and interested parties. Copies of the FONSI are available to fill single copy requests at the above address. Basic data developed during the environmental assessment are on file and may be reviewed by contacting Don Paulus, Assistant State Conservationist for Programs, at the above address.

(This activity is listed in the Catalog of Federal Domestic Assistance under No. 10.904, Watershed Protection and Flood Prevention, and is subject to the provisions of Executive Order 12372, which requires intergovernmental consultation with State and local officials.)

Dated: May 14, 2010.

David L. Mckay,

State Conservationist.

[FR Doc. 2010–12447 Filed 5–21–10; 8:45 am]

BILLING CODE 3410–16–P

DEPARTMENT OF AGRICULTURE

Forest Service

Amador County Resource Advisory Committee

AGENCY: Forest Service, USDA.

ACTION: Notice of meeting.

SUMMARY: The Amador County Resource Advisory Committee will meet in Jackson, California. The committee is meeting as authorized under the Secure Rural Schools and Community Self-Determination Act (Pub. L 110–343) and in compliance with the Federal Advisory Committee Act. The purpose of the meeting is to develop committee operating guidelines, discuss guidelines for submitting projects, and set the dates for the next meetings.

DATES: The meeting will be held on June 9, 2010 at 6 p.m.

ADDRESSES: The meeting will be held at 10877 Conductor Blvd., Sutter Creek, CA, June 9, 2010, 6 p.m.

Written comments should be sent to Frank Mosbacher; Forest Supervisor's Office; 100 Forni Road; Placerville, CA 95667. Comments may also be sent via e-mail to *fmosbacher@fs.fed.us,* or via facsimile to 530–621–5297.

All comments, including names and addresses when provided, are placed in the record and are available for public inspection and copying. The public may inspect comments received at 100 Forni Road, Placerville, CA 95667. Visitors are encouraged to call ahead to 530–622–5061 to facilitate entry into the building.

FOR FURTHER INFORMATION CONTACT: Frank Mosbacher, Public Affairs Officer, Eldorado National Forest Supervisors Office, (530) 621–5268.

Individuals who use Telecommunication Devices for the Deaf (TDD) may call the Federal Information Relay Service (FIRS) at 1–800–877–8339 between 8 a.m. and 8 p.m., Eastern Standard Time, Monday through Friday.

SUPPLEMENTARY INFORMATION: The meeting is open to the public. The following business will be conducted: At that meeting, the RAC will work on the operating guidelines for the committee and start discussing guidelines for submitting project proposal. The committee will also set future meeting dates. More information will be posted on the Eldorado National Forest Web site at *www.fs.fed.us/r5/eldorado.* A public comment opportunity will be made available following the business activity. Future meetings will have a formal public input period for those following the yet to-be-developed public input process.

Dated: May 14, 2010.

Duane A. Nelson,

Acting Forest Supervisor.

[FR Doc. 2010–12277 Filed 5–21–10; 8:45 am]

BILLING CODE 3410–11–M

DEPARTMENT OF AGRICULTURE

Forest Service

Modoc County Resource Advisory Committee

AGENCY: Forest Service, USDA.

ACTION: Notice of meeting.

SUMMARY: The Modoc County Resource Advisory Committee will meet in Alturas, CA. The committee is meeting as authorized under the Secure Rural Schools and Community Self-Determination Act (Pub. L. 110–343) and in compliance with the Federal Advisory Committee Act. The purpose of the meeting is to review Resource Advisory Committee Project Applications.

DATES: The meeting will be held June 7, 2010, 6 p.m.

ADDRESSES: The meeting will be held at Modoc National Forest Office, Conference Room, 800 West 12th St., Alturas.

FOR FURTHER INFORMATION CONTACT: Tom Hudson, Forest Supervisor and Designated Federal Officer, at (530) 233–8700; or Resource Advisory Coordinator, Stephen Riley at (530) 233–8771.

SUPPLEMENTARY INFORMATION: The business meeting on June 7, 2010 will begin at 6 p.m., at the Modoc National Forest Office, Conference Room, 800 West 12th St., Alturas, California, 96101. Agenda topics will include voting and discussion of project proposals that meet the intent of Public Law 110–343. Time will also be set aside for public comments at the beginning of the meeting.

Dated: May 17, 2010.

Tom Hudson,

Forest Supervisor.

[FR Doc. 2010–12354 Filed 5–21–10; 8:45 am]

BILLING CODE 3410–11–P

DEPARTMENT OF AGRICULTURE

Forest Service

Prince of Whales Resource Advisory Committee

AGENCY: Forest Service, USDA.

ACTION: Notice of meeting.

SUMMARY: The Prince of Whales Resource Advisory Committee will meet in Craig, Alaska, June 3, 2010. The purpose of this meeting is to discuss potential projects under the Secure Rural Schools and Community Self-Determination Act of 2008.

DATES: The meeting will be held June 3, 2010 from 10 a.m. to 4 p.m.

ADDRESSES: The meeting will be held at the Craig Ranger District, 504 9th Street, Craig Alaska. Send written comments to Prince of Whales Resource Advisory Committee, c/o District Ranger, USDA Forest Service, P.O. Box 500 Craig, AK 99921, or electronically to Rebecca Sakraida, RAC Coordinator at *rsakraida@fs.fed.us.*

FOR FURTHER INFORMATION CONTACT: Rebecca Sakraida, RAC Coordinator Craig Ranger District, Tongass National Forest, (907) 826–1601.

SUPPLEMENTARY INFORMATION: The meeting is open to the public. Committee discussion is limited to Forest Service staff and Committee members. However, public input opportunity will be provided and individuals will have the opportunity to address the Committee at that time.

Dated: May 17, 2010.

Jason Anderson,

District Ranger.

[FR Doc. 2010–12269 Filed 5–21–10; 8:45 am]

BILLING CODE 3410–11–M

DEPARTMENT OF AGRICULTURE

Foreign Agricultural Service

Trade Adjustment Assistance for Farmers

AGENCY: Foreign Agricultural Service, USDA.

ACTION: Notice.

The Administrator of the Foreign Agricultural Service (FAS) will begin accepting Trade Adjustment Assistance (TAA) for Farmers petitions for Fiscal Year 2011. Petitioners must file the information required by 7 CFR 1580.201(c) between May 21, 2010, and July 16, 2010. They may use form FAS–930 for this purpose.

Petitions may be sent by fax: (202) 720–0876; or by e-mail: *tradeadjustment@fas.usda.gov;* or by U.S. mail: TAA, Foreign Agricultural Service, Stop 1021, USDA, 1400 Independence Ave., SW., Washington, DC 20250–1021; or by courier delivery: TAA, Foreign Agricultural Service, Suite 400, USDA, 1250 Maryland Ave., SW., Washington, DC 20024. The use of fax or e-mail is preferred. The petition must be received by the close of business July 16, 2010.

SUPPLEMENTARY INFORMATION: The American Recovery and Reinvestment Act of 2009 (Pub. L. 111–5) reauthorized the TAA for Farmers Program as established by Subtitle C of Title I of the Trade Act of 2002 (Pub. L. 107–210), which amended the Trade Act of 1974. The statute authorizes an appropriation of not more than $90 million for each fiscal year 2009 through 2010, and $22.5 million for the period October 1 through December 31, 2010, to carry out the program. The regulations covering the program are found at 7 CFR part 1580.

Under this program, the U.S. Department of Agriculture (USDA) provides technical assistance and cash benefits to eligible producers of raw agricultural commodities and fishermen (jointly referred to as "producers") when the FAS Administrator determines that increased imports of raw agricultural commodities, aquaculture products, or wild-caught aquatic species (each referred to as "commodity") have contributed importantly to a greater than 15 percent decrease in the national average price, or quantity of production, or value of production, or cash receipts for the commodity specified in the petition, compared to the average of the three preceding marketing years.

To qualify, a group of producers or its authorized representative must petition the FAS Administrator for trade adjustment assistance. Petitions will be reviewed for completeness and timeliness. Once the petition is completed in accordance with 7 CFR 1580.201, a notice of acceptance will be published in the **Federal Register**, initiating a review to verify whether or not, for the most recent marketing year and for the commodity produced by the group, increased imports contributed importantly to a greater than 15 percent decrease in the national average price, or quantity of production, or value of production, or cash receipts for the agricultural commodity specified in the petition, compared to the average of the three preceding marketing years. If any one of these conditions is met, the FAS Administrator will certify the group as eligible for trade adjustment assistance and publish a notice of the certification in the **Federal Register**.

Eligible producers covered by the certification must file individual applications for assistance with USDA's Farm Service Agency within 90 days of the certification.

For further information or assistance in completing Form FAS–930, contact staff of the Trade Adjustment Assistance for Farmers Program by phone: (202) 720–0638, or by e-mail: *tradeadjustment@fas.usda.gov.* Additional program information can be obtained at the Web site for the TAA for Farmers program. The URL is *http://www.fas.usda.gov/itp/taa.*

Dated: May 17, 2010.

John D. Brewer,

Administrator, Foreign Agricultural Service.

[FR Doc. 2010–12385 Filed 5–21–10; 8:45 am]

BILLING CODE 3410–10–P

COMMISSION ON CIVIL RIGHTS

Agenda and Notice of Public Meeting of the Michigan Advisory Committee

Notice is hereby given, pursuant to the provisions of the rules and regulations of the U.S. Commission on Civil Rights (Commission), and the Federal Advisory Committee Act (FACA), that a briefing meeting of the Michigan Advisory Committee to the Commission will convene at 9:30 a.m. and adjourn at 1 p.m. on June 18, 2010, at the Spencer Partich Auditorium at Wayne State University Law School, 471 W. Palmer, Detroit, Michigan. The purpose of the meeting is to have an orientation for new members and hold a briefing on a proposed immigration bill in Michigan. State Representative Kim Meltzer, the bill sponsor, will be in attendance as will other proponents and opponents of the bill.

Members of the public are entitled to submit written comments; the comments must be received in the regional office by July 1, 2010. The address is 55 W. Monroe St., Suite 410, Chicago, IL 60603. Persons wishing to email their comments, or to present their comments verbally at the meeting, or who desire additional information should contact Carolyn Allen, Administrative Assistant, Midwestern Regional Office, U.S. Commission on Civil Rights, at (312) 353–8311, or by e-mail: *callen@usccr.gov.*

Hearing-impaired persons who will attend the meeting and require the services of a sign language interpreter should contact the Regional Office at least ten (10) working days before the scheduled date of the meeting.

Records generated from this meeting may be inspected and reproduced at the Midwestern Regional Office, as they become available, both before and after the meeting. Persons interested in the work of this advisory committee are advised to go to the Commission's Web site, *http://www.usccr.gov,* or to contact the Midwestern Regional Office at the above e-mail or street address.

The meeting will be conducted pursuant to the provisions of the rules and regulations of the Commission and FACA.

Dated in Washington, DC, May 19, 2010.

Peter Minarik,

Chief, Regional Programs Coordination Unit.

[FR Doc. 2010–12401 Filed 5–21–10; 8:45 am]

BILLING CODE 6335–01–P

DEPARTMENT OF COMMERCE

Bureau of Industry and Security

Proposed Information Collection; Comment Request; Procedure for Voluntary Self-Disclosure of Violations of the Export Administration Regulations

AGENCY: Bureau of Industry and Security.

ACTION: Notice.

SUMMARY: The Department of Commerce, as part of its continuing effort to reduce paperwork and respondent burden, invites the general public and other Federal agencies to take this opportunity to comment on proposed and/or continuing information

collections, as required by the Paperwork Reduction Act of 1995.

DATES: Written comments must be submitted on or before July 23, 2010.

ADDRESSES: Direct all written comments to Diana Hynek, Departmental Paperwork Clearance Officer, Department of Commerce, Room 6625, 14th and Constitution Avenue, NW., Washington, DC 20230 (or via the Internet at *dHynek@doc.gov).*

FOR FURTHER INFORMATION CONTACT: Requests for additional information or copies of the information collection instrument and instructions should be directed to Larry Hall, BIS ICB Liaison, (202) 482–4895, *lhall@bis.doc.gov*.

SUPPLEMENTARY INFORMATION:

I. Abstract

This collection of information is needed to detect violations of the Export Administration Act and Regulations, and determine if an investigation or prosecution is necessary and to reach a settlement with violators. Voluntary self-disclosure of EAR violations strengthens BIS's enforcement efforts by allowing BIS to conduct investigations of the disclosed incidents faster than would be the case if BIS had to detect the violations without such disclosures. BIS evaluates the seriousness of the violation and either (1) Informs the person making the disclosure that no action is warranted; (2) issues a warning letter; (3) issues a proposed charging letter and attempts to settle the matter; (4) issues a charging letter if settlement is not reached; and/or (5) refers the matter to the U.S. Department of Justice for criminal prosecution.

II. Method of Collection

Submitted electronically or in paper form.

III. Data

OMB Control Number: 0694–0058.
Form Number(s): None.
Type of Review: Regular submission.
Affected Public: Business or other for-profit organizations.
Estimated Number of Respondents: 193.
Estimated Time per Response: 10 hours.
Estimated Total Annual Burden Hours: 1,930.
Estimated Total Annual Cost to Public: $0.

IV. Request for Comments

Comments are invited on: (a) Whether the proposed collection of information is necessary for the proper performance of the functions of the agency, including whether the information shall have practical utility; (b) the accuracy of the agency's estimate of the burden (including hours and cost) of the proposed collection of information; (c) ways to enhance the quality, utility, and clarity of the information to be collected; and (d) ways to minimize the burden of the collection of information on respondents, including through the use of automated collection techniques or other forms of information technology.

Comments submitted in response to this notice will be summarized and/or included in the request for OMB approval of this information collection; they also will become a matter of public record.

Dated: May 19, 2010.

Gwellnar Banks,

Management Analyst, Office of the Chief Information Officer.

[FR Doc. 2010–12352 Filed 5–21–10; 8:45 am]

BILLING CODE 3510–33–P

DEPARTMENT OF COMMERCE

National Telecommunications and Information Administration

Proposed Information Collection; Comment Request; Broadband Subscription and Usage Supplement to the Census Bureau's Current Population Survey

AGENCY: National Telecommunications and Information Administration.

ACTION: Notice.

SUMMARY: The Department of Commerce, as part of its continuing effort to reduce paperwork and respondent burden, invites the general public and other Federal agencies to take this opportunity to comment on proposed and/or continuing information collections, as required by the Paperwork Reduction Act of 1995.

DATES: Written comments must be submitted on or before July 23, 2010.

ADDRESSES: Direct all written comments to Diana Hynek, Departmental Paperwork Clearance Officer, Department of Commerce, Room 6625, 14th and Constitution Avenue, NW., Washington, DC 20230 (or via the Internet at *dHynek@doc.gov*).

FOR FURTHER INFORMATION CONTACT: Requests for additional information or copies of the information collection instrument and instructions should be directed to James McConnaughey, Senior Economist, Office of Policy and Analysis Development, NTIA, at (202) 482–1880, *jmcConnaughey@ntia.doc.gov.*

SUPPLEMENTARY INFORMATION:

I. Abstract

NTIA proposes to add eight questions to the Census Bureau's October 2010 Current Population Survey (CPS) in order to gather reliable data on broadband (also known as high-speed Internet) use by U.S. households. President Obama has established a national goal of universal, affordable broadband access for all Americans.[1] To that end, the Administration is working with Congress, the Federal Communications Commission (FCC), and other stakeholders to develop and advance economic and regulatory policies that foster broadband deployment and adoption. Current, systematic, and comprehensive data on broadband access and non-use by U.S. households is critical to allow policymakers not only to gauge progress made to date, but also to identify problem areas with a specificity that permits carefully targeted and cost effective responses.

The need for comprehensive broadband data has become more pressing. The General Accountability Office (GAO), NTIA, and the FCC recently issued reports noting the lack of useful broadband data for policymakers, and Congress passed legislation—the Broadband Data Improvement Act in 2008 and the American Recovery and Reinvestment Act in 2009—wholly or partly in response to such criticisms. The Organization for Economic Cooperation and Development (OECD) has ranked the United States a disappointing number 15 in household broadband access over the past several years despite a period of rapid growth in the technology's penetration. The OECD looks to Census data as an important input into their inter-country benchmark analyses. Modifying the October CPS to include NTIA's requested broadband data will allow the Commerce Department and NTIA to respond to congressional concerns, congressional directives, and to work with the OECD on its broadband methodologies with more recent data.

II. Method of Collection

Personal visits and telephone interviews, using computer-assisted telephone interviewing and computer-assisted personal interviewing.

III. Data

OMB Control Number: 0660–0021.

[1] *See http://www.whitehouse.gov/sites/default/files/20091217-recovery-act-investments-broadband.pdf* (last viewed May 11, 2010).

Form Number(s): None.

Type of Review: Regular submission (Reinstatement).

Affected Public: Individuals or households.

Estimated Number of Respondents: 54,000.

Estimated Time per Response: 90 seconds.

Estimated Total Annual Burden Hours: 1,350 hours.

Estimated Total Annual Cost to Public: $0.

IV. Requests for Comments

Comments are invited on: (a) Whether the proposed collection of information is necessary for the proper performance of the functions of the agency, including whether the information shall have practical utility; (b) the accuracy of the agency's estimate of the burden (including hours and cost) of the proposed collection of information; (c) ways to enhance the quality, utility, and clarity of the information to be collected; and (d) ways to minimize the burden of the collection of information on respondents, including through the use of automated collection techniques or other forms of information technology.

Comments submitted in response to this notice will be summarized and/or included in the request for OMB approval of this information collection; they also will be a matter of public record.

Dated: May 19, 2010.

Gwellnar Banks,

Management Analyst, Office of the Chief Information Officer.

[FR Doc. 2010–12350 Filed 5–21–10; 8:45 am]

BILLING CODE 3510–60–P

DEPARTMENT OF COMMERCE

International Trade Administration

Liquid Crystal Institute, et al., Notice of Consolidated Decision on Applications for Duty–Free Entry of Electron Microscopes

This is a decision consolidated pursuant to Section 6(c) of the Educational, Scientific, and Cultural Materials Importation Act of 1966 (Pub. L. 89–651, as amended by Pub. L. 106–36; 80 Stat. 897; 15 CFR part 301). Related records can be viewed between 8:30 A.M. and 5:00 P.M. in Room 3720, U.S. Department of Commerce, 14th and Constitution Avenue., NW, Washington, D.C.

Docket Number: 10–005. Applicant: Liquid Crystal Institute, Kent, OH 44242. Instrument: Electron Microscope. Manufacturer: FEI Company, the Czech Republic. Intended Use: See notice at 75 FR 21232, April 23, 2010.

Docket Number: 10–006. Applicant: Purdue University, West Lafayette, IN 21232, April 23, 2010. Instrument: Electron Microscope. Manufacturer: FEI Corporation, the Netherlands. Intended Use: See notice at 75 FR 21232, April 23, 2010.

Docket Number: 10–007. Applicant: Washington University in St. Louis, St. Louis, MO 63130. Instrument: Electron Microscope. Manufacturer: JEOL, Ltd., Japan. Intended Use: See notice at 78 FR 21232, April 23, 2010.

Comments: None received. Decision: Approved. No instrument of equivalent scientific value to the foreign instrument, for such purposes as these instruments are intended to be used, was being manufactured in the United States at the time the instruments were ordered. Reasons: Each foreign instrument is an electron microscope and is intended for research or scientific educational uses requiring an electron microscope. We know of no electron microscope, or any other instrument suited to these purposes, which was being manufactured in the United States at the time of order of each instrument.

Dated: May 17, 2010.

Christopher Cassel,

Director, Subsidies Enforcement Office, Import Administration.

[FR Doc. 2010–12427 Filed 5–21–10; 8:45 am]

BILLING CODE 3510–DS–S

DEPARTMENT OF COMMERCE

United States Patent and Trademark Office

[Docket No. PTO–C–2010–0045]

Extension of Period for Nominations to the National Medal of Technology and Innovation Nomination Evaluation Committee

AGENCY: United States Patent and Trademark Office, Commerce.

ACTION: Notice and request for nominations.

SUMMARY: The Department of Commerce (United States Patent and Trademark Office) previously published a notice in the **Federal Register** requesting nominations of individuals to serve on the National Medal of Technology and Innovation Nomination Evaluation Committee. The USPTO is extending the deadline until August 1, 2010. The United States Patent and Trademark Office will consider nominations received in response to the original notice as published on February 1, 2010, as well as from this notice of extension and from other sources. The **SUPPLEMENTARY INFORMATION** section of this notice provides committee and membership criteria.

DATES: Please submit nominations by August 1, 2010.

ADDRESSES: Nominations should be submitted to Richard Maulsby, Program Manager, National Medal of Technology and Innovation Program, United States Patent and Trademark Office, P.O. Box 1450, Alexandria, Virginia 22313–1450. Nominations also may be submitted via fax: (571) 270–9100 or by electronic mail to: *nmti@uspto.gov.*

FOR FURTHER INFORMATION CONTACT: Richard Maulsby, Program Manager, National Medal of Technology and Innovation Program, United States Patent and Trademark Office, P.O. Box 1450, Alexandria, Virginia 22313–1450, telephone (571) 272–8333, or electronic mail: *nmti@uspto.gov.*

SUPPLEMENTARY INFORMATION:

Background: The committee was established in accordance with the Federal Advisory Committee Act (FACA) (Title 5, United States Code, Appendix 2). The following provides information about the committee and membership:

- Committee members are appointed by and serve at the discretion of the Secretary of Commerce. The committee provides advice to the Secretary on the implementation of Public Law 96–480 (15 U.S.C. 3711), as amended August 9, 2007.
- The committee functions solely as an advisory body under the FACA. Members are appointed to the 12-member committee for a term of three years. Each will be reevaluated at the conclusion of the three-year term with the prospect of renewal, pending advisory committee needs and the Secretary's concurrence. Selection of membership is made in accordance with applicable Department of Commerce guidelines.
- Members are responsible for reviewing nominations and making recommendations for the Nation's highest honor for technological innovation, awarded annually by the President of the United States. Members of the committee must have an understanding of, and experience in, developing and utilizing technological innovation and/or be familiar with the education, training, employment and management of technological manpower.
- Under the FACA, membership on a committee must be balanced. To achieve balance, the Department is seeking additional nominations of candidates

from small, medium-sized, and large businesses or with special expertise in the following sub-sectors of the technology enterprise:

Medical Innovations/Bioengineering and Biomedical Technology; Technology Management/Computing/IT/Manufacturing Innovation; Technological Manpower/Workforce Training/Education.

Committee members generally are Chief Executive Officers or former Chief Executive Officers, former winners of the National Medal of Technology and Innovation; presidents or distinguished faculty of universities; or senior executives of non-profit organizations. As such, they not only offer the stature of their positions but also possess intimate knowledge of the forces determining future directions for their organizations and industries. The committee as a whole is balanced in representing geographical, professional, and diverse interests.

Nomination Information:

- Nominees must be United States citizens, must be able to fully participate in meetings pertaining to the review and selection of finalists for the National Medal of Technology and Innovation, and must uphold the confidential nature of an independent peer review and competitive selection process.
- The United States Patent and Trademark Office is committed to equal opportunity in the workplace and seeks a broad-based and diverse committee membership.

The United States Patent and Trademark Office is extending the period for nomination until August 1, 2010.

Dated: May 17, 2010.

David J. Kappos,

Under Secretary of Commerce for Intellectual Property and Director of the United States Patent and Trademark Office.

[FR Doc. 2010–12400 Filed 5–21–10; 8:45 am]

BILLING CODE 3510–16–P

DEPARTMENT OF COMMERCE

National Oceanic and Atmospheric Administration

RIN 0648–XW58

South Atlantic Fishery Management Council; Public Meetings

AGENCY: National Marine Fisheries Service (NMFS), National Oceanic and Atmospheric Administration (NOAA), Commerce.

ACTION: Notice of public meetings.

SUMMARY: The South Atlantic Fishery Management Council will hold a meeting of its Spiny Lobster Committee and Advisory Panel jointly with the Gulf of Mexico Fishery Management Council's Spiny Lobster Committee and Advisory Panel, a meeting of its Mackerel Committee jointly with the Gulf of Mexico Fishery Management Council's Mackerel Committee, and a meeting of the Full Council. The Council will take action as necessary. The Council will also hold an informal public question and answer session, and a public comment session regarding agenda items. See **SUPPLEMENTARY INFORMATION** for additional details.

DATES: The meeting will be held June 7–11, 2010. See **SUPPLEMENTARY INFORMATION** for specific dates and times.

ADDRESSES: The meeting will be held at the Renaissance Orlando Airport Hotel, 5445 Forbes Place, Orlando, FL 32812; telephone: (800) 545–1985 or (407) 240–1000; fax: (407) 240–1005. Copies of documents are available from Kim Iverson, Public Information Officer, South Atlantic Fishery Management Council, 4055 Faber Place Drive, Suite 201, North Charleston, SC 29405.

FOR FURTHER INFORMATION CONTACT: Kim Iverson, Public Information Officer; telephone: (843) 571–4366 or toll free at (866) SAFMC–10; fax: (843) 769–4520; email: *kim.iverson@safmc.net*.

SUPPLEMENTARY INFORMATION:

Meeting Dates:

1. Joint Spiny Lobster Committee and Advisory Panel Meeting with the Gulf of Mexico Fishery Management Council's Spiny Lobster Committee and Advisory Panel: June 7, 2010, 8:30 a.m. until 5:30 p.m..

Committees and Advisory Panels from both the South Atlantic and Gulf of Mexico Fishery Management Councils will meet to review options for Amendment 10 to the joint Fishery Management Plan (FMP) for Spiny Lobster for Gulf of Mexico and South Atlantic. Amendment 10 will address the requirements of the Reauthorized Magnuson-Stevens Fishery Conservation and Management Act (MSA) including establishment of Annual Catch Limits (ACLs) and Accountability Measures (AMs). Other potential actions in the amendment include options for tailing permits, the use of undersized lobster as an attractant, and consideration of delegation of management to the State of Florida. The Committees will provide recommendations to both the South Atlantic and Gulf of Mexico Councils.

Note: There will be an informal public question and answer session with NOAA Fisheries Services' Regional Administrator and the Council Chairman on June 7, 2010 beginning at 6 p.m.

2. Joint South Atlantic and Gulf of Mexico Mackerel Committees Meeting: June 8, 2010, 8:30 a.m. until 3 p.m.

The joint Mackerel Committees will review the reports from their respective Scientific and Statistical Committees (SSCs) regarding Atlantic and Gulf of Mexico stocks of king mackerel and Spanish mackerel. The Committees will also review Amendment 18 to the FMP for Coastal Migratory Pelagic Resources, discuss a king mackerel catch shares program and establish public hearing dates and locations. Amendment 18 addresses requirements of the MSA to set ACLs and AMs for species managed in the FMP. The Committees will provide recommendations and direction to staff.

3. Council Session: June 8, 2010, 3:15 p.m. until 6:15 p.m., June 9, 2010, 8:30 a.m. until 6:30 p.m., June 10, 2010, 8:30 a.m. until 6 p.m., June 11, 2010, 8:30 a.m. until noon.

Council Session: June 8, 2010, 3:15 p.m. until 6:15 p.m.

3:15 p.m. - 3:30 p.m., the Council will call the meeting to order, adopt the agenda, and approve the March 2010 meeting minutes.

3:30 p.m. - 6:15 p.m., the Council will receive presentations relative to Snapper Grouper issues, including a report from the SSC, an update on activities relative to the Oculina Bank Experimental Closed Area, quota monitoring programs, and data collection programs.

Note: A public comment period on any of the June meeting agenda items will be held on June 8, 2010 beginning at 6:30 p.m. This includes Amendment 17A to the Snapper Grouper FMP regarding management measures for red snapper.

Council Session: June 9, 2010, 8:30 a.m. until 6:30 p.m.

8:30 a.m. - 10 a.m., the Council will review comments received on the Draft Environmental Statement relative to Amendment 17A to the Snapper Grouper Fishery Management Plan for the South Atlantic, modify the document as appropriate, and approve the amendment for submission to the Secretary of Commerce for formal review. Amendment 17A includes actions to meet the requirements of the MSA for red snapper, including ending overfishing and rebuilding the stock. Management measures include a closure

of the red snapper fishery, an area closure for all snapper grouper species, requirements for circle hooks, and establishment of a red snapper monitoring program.

10 a.m. - 11 a.m., in the event the red snapper benchmark stock assessment allows for modification to the proposed management actions in Amendment 17A, the Council will review options for modification of existing actions. These include various alternatives for the area closure and approaches or mechanisms appropriate to modify the actions.

11 a.m. - 12 noon, the Council will also continue to review management measures proposed in Amendment 18 to the Snapper Grouper FMP, provide guidance for any new items that may be added, and approve for a second round of public hearings if necessary. Amendment 18 includes management measures to extend the range of the Snapper Grouper FMP north, designate Essential Fish Habitat in any new northern areas, measures to limit participation in the commercial golden tilefish and changes to the golden tilefish fishing year, measures to reduce participation, effort and bycatch in the commercial black sea bass fishery, and measures to improve data collection.

1:30 p.m. - 2:30 p.m., the Council will review Amendment 20 to the Snapper Grouper FMP, modify the document as necessary and provide guidance to staff. Amendment 20 includes management measures to meet the requirements of the MSA relative to the wreckfish fishery. The fishery currently operates under an Individual Transferable Quota (ITQ) system.

2:30 p.m. - 4 p.m., the Council will review alternatives within the Comprehensive Annual Catch Limit Amendment designed to meet the requirements of the MSA, including the establishment of ACLs and AMs for all species not undergoing overfishing within the Council's jurisdiction by 2011. The Council will review alternatives, including those needed in response to recent black grouper and red grouper stock assessments, modify the document as necessary, and provide guidance to staff.

4 p.m. - 4:30 p.m., the Council will review alternatives for Amendment 21 to the Snapper Grouper FMP. The amendment currently involves the following species: vermilion snapper, golden tilefish, black sea bass, gag, greater amberjack, red grouper, and black grouper, and includes options for trip limits, effort and participation reduction and endorsement actions, and options for catch share programs for quota species except snowy grouper. The Council will provide guidance to staff regarding the development of the amendment.

4:30 p.m. - 5:30 p.m., the Council will review alternatives for Amendment 22 to the Snapper Grouper FMP. The amendment includes long-term management measures for the red snapper fishery as the stock begins to rebuild. The Council will provide guidance to staff regarding the development of the amendment.

5:30 p.m. - 6 p.m., the Council will discuss a potential interim rule request for black sea bass, vermilion snapper, and gag grouper trip limits and provide guidance to staff.

6 p.m. - 6:30 p.m., the Council will consider options to modify sea turtle handling and release gear requirements and take action as necessary.

Council Session: June 10, 2010, 8:30 a.m. until 6 p.m.

8:30 a.m. - 9 a.m. (**CLOSED SESSION**) - The Council will receive legal briefing on litigation.

9 a.m. - 10 a.m., the Council will review SSC recommendations regarding golden crab, receive a status report on the development of Amendment 5 to the Golden Crab FMP regarding establishment of a catch share program for the fishery, develop recommendations for the Comprehensive ACL Amendment and take action as necessary.

10 a.m. - 11 a.m., the Council will review SSC recommendations regarding species managed in the Dolphin Wahoo FMP, develop recommendations for the Comprehensive ACL Amendment and take action as necessary.

11 a.m. - 12 noon, the Council will review the status of the Calendar Year (CY) 2010 budget, receive a report on the Council Coordinating Committee meeting, and take action as appropriate.

1:30 p.m. - 3 p.m., the Council will review input from the SSC regarding the Comprehensive Ecosystem-Based Amendment 2 addressing requirements for Essential Fish Habitat (EFH) and EFH-Habitat Areas of Particular Concern as required by the Final Rule, harvest requirements for corals, and evaluation of fishing gear impacts. The Council will review alternatives and take action as necessary. The Council will also develop input for Sargassum relative to the Comprehensive ACL Amendment, review and provide guidance to staff on the Council's Invasive Species Policy statement.

3 p.m. - 4 p.m., the Council will review the conflict of interest disclosure form regarding the Southeast Data, Assessment, and Review (SEDAR) stock assessment program, make SSC appointments to the Goliath grouper SEDAR assessment and review panels, and the SEDAR Spiny Lobster review panel.

4 p.m. - 5 p.m., the Council will revise its Standard Operations and Procedures Policy (SOPPs) as dictated by the Final Rule, and take action as necessary.

5 p.m. - 6 p.m. (**CLOSED SESSION**) - The Council will review updated SSC job descriptions, review applicants to the SSC and appoint members as necessary.

Council Session: June 11, 2010, 8:30 a.m. until 12 noon.

8:30 a.m. - 9 a.m., the Council will receive recommendations from the Spiny Lobster Committee and take action as appropriate.

9 a.m. - 9:30 a.m., the Council will receive recommendations from the Mackerel Committee and take action as appropriate.

9:30 a.m. - 10 a.m., the Council will receive a report from the SSC Selection Committee and appoint or reappoint members as necessary.

10 a.m. - 10:30 a.m., the Council will review and develop recommendations on Experimental Fishing Permits as necessary.

10:30 a.m. - 12 noon, the Council will receive status reports from NOAA Fisheries' Southeast Regional Office, NOAA Fisheries' Southeast Fisheries Science Center, agency and liaison reports, and discuss other business including upcoming meetings.

Documents regarding these issues are available from the Council office (see **ADDRESSES**).

Although non-emergency issues not contained in this agenda may come before this Council for discussion, those issues may not be the subjects of formal final Council action during these meetings. Council action will be restricted to those issues specifically listed in this notice and any issues arising after publication of this notice that require emergency action under section 305 (c) of the Magnuson-Stevens Act, provided the public has been notified of the Council's intent to take final action to address the emergency.

Except for advertised (scheduled) public hearings and public comment, the times and sequence specified on this agenda are subject to change.

Special Accommodations

These meetings are physically accessible to people with disabilities. Requests for sign language interpretation or other auxiliary aids should be directed to the Council office (see **ADDRESSES**) by June 3, 2010.

Dated: May 18, 2010.

Tracey L. Thompson,

Acting Director, Office of Sustainable Fisheries, National Marine Fisheries Service.

[FR Doc. 2010–12317 Filed 5–21–10; 8:45 am]

BILLING CODE 3510–22–S

DEPARTMENT OF COMMERCE

National Oceanic and Atmospheric Administration

RIN 0648–XW59

Western Pacific Fishery Management Council; Public Meetings

AGENCY: National Marine Fisheries Service (NMFS), National Oceanic and Atmospheric Administration (NOAA), Commerce.

ACTION: Notice of public meetings.

SUMMARY: The Western Pacific Fishery Management Council (Council) will hold a meeting of its Hawaii Plan Team (PT).

DATES: The Hawaii PT meeting will be held on June 16, 2010. For specific times and agendas, see **SUPPLEMENTARY INFORMATION**.

ADDRESSES: The PT meeting will be held at the Council Office Conference Room, 1164 Bishop Street, Suite 1400, Honolulu, HI.

FOR FURTHER INFORMATION CONTACT: Kitty M. Simonds, Executive Director; telephone: (808) 522–8220.

SUPPLEMENTARY INFORMATION: Public comment periods will be provided. The order in which agenda items are addressed may change. The meetings will run as late as necessary to complete scheduled business.

Schedule and Agenda for PT meeting:

Wednesday, June 16, 2010, 9 a.m. - 12 noon

The Hawaii PT will meet to hear reports on, discuss and consider developing recommendations on the following upcoming Council meeting actions:

A. Process for Closure of the Main Hawaiian Island Bottomfish Fishery

B. Update on the Status of the Hawaii Bottomfish Stock

C. Main Hawaiian Islands Bottomfish Total Allowable Catch options for 2010/11 fishery

Although non-emergency issues not contained in this agenda may come before this group for discussion, those issues may not be the subject of formal action during this meeting. Action will be restricted to those issues specifically listed in this notice and any issues arising after publication of this notice that require emergency action under section 305(c) of the Magnuson-Stevens Fishery Conservation and Management Act, provided the public has been notified of the Council's intent to take final action to address the emergency.

Special Accommodations

This meeting is physically accessible to people with disabilities. Requests for sign language interpretation or other auxiliary aids should be directed to Kitty M. Simonds, (808) 522–8220 (voice) or (808) 522–8226 (fax), at least 5 days prior to the meeting date.

Authority: 16 U.S.C. 1801 *et seq.*

Dated: May 18, 2010.

Tracey L. Thompson,

Acting Director, Office of Sustainable Fisheries, National Marine Fisheries Service.

[FR Doc. 2010–12331 Filed 5–21–10; 8:45 am]

BILLING CODE 3510–22–S

DEPARTMENT OF COMMERCE

National Institute of Standards and Technology

Visiting Committee on Advanced Technology

AGENCY: National Institute of Standards and Technology, Department of Commerce.

ACTION: Notice of Partially Closed Meeting.

SUMMARY: The Visiting Committee on Advanced Technology (VCAT), National Institute of Standards and Technology (NIST), will meet Tuesday, June 8, 2010, from 8:30 a.m. to 5 p.m. and Wednesday, June 9, 2010, from 8:30 a.m. to 3 p.m. The Visiting Committee on Advanced Technology is composed of fifteen members appointed by the Director of NIST who are eminent in such fields as business, research, new product development, engineering, labor, education, management consulting, environment, and international relations.

DATES: The VCAT will meet on Tuesday, June 8, 2010 from 8:30 to 5 p.m. and Wednesday, June 9, 2010, from 8:30 a.m. to 3 p.m. The portion of the meeting that is closed to the public will take place on Tuesday, June 8, 2010 from 3 p.m. to 5 p.m.

ADDRESSES: The meeting will be held in the Portrait Room, Administration Building, at NIST, Gaithersburg, Maryland. The rooms for the Working Groups will be announced at the meeting. Please note admittance instructions under the **SUPPLEMENTARY INFORMATION** section of this notice.

FOR FURTHER INFORMATION CONTACT: Stephanie Shaw, Visiting Committee on Advanced Technology, National Institute of Standards and Technology, Gaithersburg, Maryland 20899–1060, telephone number (301) 975–2667. Ms. Shaw's email address is *stephanie.shaw@nist.gov.*

SUPPLEMENTARY INFORMATION: The purpose of this meeting is to review and make recommendations regarding general policy for the Institute, its organization, its budget, and its programs within the framework of applicable national policies as set forth by the President and the Congress. The first day's agenda will include an update on NIST; presentations on NIST progress in documentary standards for Smart Grid Interoperability, Healthcare Information Technology, and Cybersecurity as well as an overview of the National Science and Technology Council Subcommittee on Standards; and overviews of NIST's external needs assessment workshops in the areas of advanced photovoltaics and greenhouse gas emissions. During a closed session on June 8 from 3 p.m. until 5 p.m., the VCAT will discuss sensitive planning information about NIST programs. On the second day, the meeting will focus on strengthening NIST mission through optimization of NIST's measurement services with an overview of the agency's measurement services, external perspectives from guest speakers on the impacts and issues related to these services, and a presentation on the integration of measurement services to NIST research programs. The agenda may change to accommodate Committee business. The final agenda will be posted on the NIST Web site at *http://www.nist.gov/director/vcat/agenda.htm.*

The Assistant Secretary for Administration, with the concurrence of the General Counsel, formally determined on May 17, 2010, that portions of the meeting of the VCAT that involve discussions regarding information the premature disclosure of which would be likely to significantly frustrate implementation of a proposed agency action may be closed in accordance with 5 U.S.C. 552b(c)(9)(B). The closed portion of the meeting is scheduled to begin at 3 p.m. and to end at 5 p.m. on June 8, 2010. All other portions of the meeting will be open to the public.

Individuals and representatives of organizations who would like to offer comments and suggestions related to the Committee's affairs are invited to request a place on the agenda. On June 8, 2010, approximately one-half hour will be reserved in the afternoon for

public comments, and speaking times will be assigned on a first-come, first-serve basis. The amount of time per speaker will be determined by the number of requests received, but is likely to be about 3 minutes each. The exact time for public comments will be included in the final agenda that will be posted on the NIST Web site at *http://www.nist.gov/director/vcat/agenda.htm.* Questions from the public will not be considered during this period. Speakers who wish to expand upon their oral statements, those who had wished to speak but could not be accommodated on the agenda, and those who were unable to attend in person are invited to submit written statements to the VCAT, National Institute of Standards and Technology, 100 Bureau Drive, MS 1060, Gaithersburg, Maryland, 20899, via fax at 301–216–0529 or electronically by e-mail to *gail.ehrlich@nist.gov.*

All visitors to the NIST site will have to pre-register to be admitted. Please submit your name, time of arrival, email address and phone number to Stephanie Shaw no later than Friday, June 4, 2010, and she will provide you with instructions for admittance. Ms. Shaw's e-mail address is *stephanie.shaw@nist.gov* and her phone number is (301) 975–2667.

Dated: May 19, 2010.

Katharine Gebbie,

Director, Physics Laboratory.

[FR Doc. 2010–12411 Filed 5–21–10; 8:45 am]

BILLING CODE 3510–13–P

DEPARTMENT OF DEFENSE

Office of the Secretary

Federal Advisory Committee; Department of Defense Wage Committee

AGENCY: Department of Defense (DoD).

ACTION: Notice of closed meeting.

SUMMARY: Pursuant to the provisions of section 10 of Public Law 92–463, the Federal Advisory Committee Act, notice is hereby given that a closed meeting of the Department of Defense Wage Committee will be held on June 15, 2010.

DATES: The meeting will be held on Tuesday, June 15, 2010, at 10 a.m.

ADDRESSES: The meeting will be held at 1400 Key Boulevard, Level A, Room A101, Rosslyn, Virginia 22209.

FOR FURTHER INFORMATION CONTACT: Additional information concerning the meetings may be obtained by writing to the Chairman, Department of Defense Wage Committee, 4000 Defense Pentagon, Washington, DC 20301–4000.

SUPPLEMENTARY INFORMATION: Under the provisions of section 10(d) of Public Law 92–463, the Department of Defense has determined that the meeting meets the criteria to close meetings to the public because the matters to be considered are related to internal rules and practices of the Department of Defense and the detailed wage data to be considered were obtained from officials of private establishments with a guarantee that the data will be held in confidence.

However, members of the public who may wish to do so are invited to submit material in writing to the chairman (*see* **FOR FURTHER INFORMATION CONTACT**) concerning matters believed to be deserving of the Committee's attention.

Dated: May 19, 2010.

Mitchell S. Bryman,

Alternate OSD Federal Register Liaison Officer, Department of Defense.

[FR Doc. 2010–12408 Filed 5–21–10; 8:45 am]

BILLING CODE 5001–06–P

DEPARTMENT OF DEFENSE

Office of the Secretary

Federal Advisory Committee; National Defense Intelligence College Board of Visitors; Closed Meeting

AGENCY: Defense Intelligence Agency, National Defense Intelligence College, DoD.

ACTION: Notice of closed meeting.

SUMMARY: Pursuant to the provisions of subsection (d) of section 10 of Public Law 92–463, as amended by section 5 of Public Law 94–409, notice is hereby given that a closed meeting of the Defense Intelligence Agency, National Defense Intelligence College Board of Visitors will be held on June 15 and 16, 2010, in Washington, DC.

DATES: The meeting will be held on Tuesday, June 15, 2010 (from 8 a.m. to 5 p.m.) and on Wednesday, June 16, 2010 (from 8 a.m. to 12 p.m.).

ADDRESSES: The meeting will be held at the National Defense Intelligence College, Washington, DC 20340–5100.

FOR FURTHER INFORMATION CONTACT: Dr. David R. Ellison, President, DIA National Defense Intelligence College, Washington, DC 20340–5100 (202) 231–3344.

SUPPLEMENTARY INFORMATION: The entire meeting is devoted to the discussion of classified information as defined in section 552b(c)(1), title 5 of the U.S. Code and therefore will be closed. The Board will discuss several current critical intelligence issues and advise the Director, DIA, as to the successful accomplishment of the mission assigned to the National Defense Intelligence College.

Dated: May 19, 2010.

Mitchell S. Bryman,

Alternate OSD Federal Register Liaison Officer, Department of Defense.

[FR Doc. 2010–12410 Filed 5–21–10; 8:45 am]

BILLING CODE 5001–06–P

DEPARTMENT OF DEFENSE

Department of the Navy

Notice of Availability for Donation as a Museum/Memorial, the Battleship ex-IOWA (BB 61)

AGENCY: Department of the Navy, DoD.

ACTION: Notice.

SUMMARY: The Department of the Navy (DON) hereby gives notice of the re-opening of availability for donation as a museum/memorial the battleship ex-IOWA (BB 61), located at the Suisun Bay Reserve Fleet, Benecia, CA. The previous notice of availability for ex-IOWA was published in the **Federal Register** Vol. 71, No. 60, dated March 29, 2006. This current notice is intended for organizations who have not previously submitted a ship donation application to the Navy for ex-IOWA.

The availability of this battleship for donation is in compliance with Public Law 109–163, the FY06 National Defense Authorization Act, and under the authority of 10 U.S.C. 7306. The Secretary of the Navy requires, as a condition of transfer, that the donee locate ex-IOWA within the State of California.

The transfer of ships for donation under 10 U.S.C. 7306 shall be made at no cost to the United States Government. The donee will be required to maintain the ship as a static display in a condition that is satisfactory to the Secretary of the Navy.

In accordance with Public Law 109–163, the 30-day Congressional notification of donation was waived for ex-IOWA. It is in the best interests of the DON to donate this ship as soon as possible. Therefore, a Letter of Intent will be required within 45 days from the date of this notice and all ship donation applications must be received within six months from the date of this notice.

Prospective donees must submit a Letter of Intent to the Navy Inactive Ships Program office within 45 days of this notice. The Letter of Intent must:

a. Identify the specific ship sought for donation;

b. Include a statement of the proposed use for the ship;

c. Identify the proposed berthing location;

d. If the applicant is not a State, territory or possession of the United States, or a political subdivision or municipal corporation thereof, or the District of Columbia, provide a copy of a determination letter by the Internal Revenue Service that the applicant is exempt from tax under the Internal Revenue Code, or submit evidence that the applicant has filed the appropriate documentation in order to obtain tax exempt status;

e. If the applicant asserts that it is a corporation or association whose charter or articles of agreement denies it the right to operate for profit, provide a properly authenticated copy of the charter, certificate of incorporation, and a copy of the organization's by-laws;

f. Provide a notarized copy of the resolution or other action of the applicant's governing board authorizing the person signing the application to represent the organization and to sign on its behalf for the purpose of obtaining a vessel; and

g. Provide written affirmation that the prospective donee can submit a complete ship donation application to the DON, compliant with the DON's application requirements, within six months of this notice. If the applicant is incapable of meeting this deadline, specific rationale must be provided along with identification of the events that must be achieved and the timeline necessary in order to submit a complete ship donation application to the DON. The DON reserves the right to provide a reasonable extension for receipt of applications, or to reject a request for extension and to proceed with other applications received within the six-month deadline.

Upon receipt of the Letter of Intent, the DON will contact the prospective donees to ensure a full understanding of the application requirements.

Qualified organizations in the State of California wishing to apply for ex-IOWA must submit a complete application to the DON within six months of this notice, comprised of a business/financial plan, a technical plan (including a towing plan, mooring plan, maintenance plan and environmental plan), a curatorial/museum plan, and a community support plan (including information concerning support from the community and benefit to the DON). The application must address the following areas:

a. *Business/Financial Plan:* The Business/Financial Plan must detail the estimated start-up and operating costs, and provide detailed evidence of firm financing adequate to cover these costs. Start-up costs include towing, mooring (this includes but is not limited to the cost of acquiring and improving facilities, and dredging if required), ship restoration, museum development, and meeting environmental requirements (including permitting fees and expenses). Operating costs are those associated with operating and maintaining the vessel as a museum/memorial, including rent, utilities, personnel, insurance, periodic dry-docking, etc. Firm financing means available funding to ensure the first five years of operation and future stability for long-term operation. This can include pledges, loans, gifts, bonds (except revenue bonds), funds on deposit at a financial institution, or any combination of the above. The applicant must also provide income projections from sources such as individual and group admissions, facility rental fees and gift shop revenues sufficient to cover the estimated operating expenses.

b. *Technical:* The technical plan is comprised of a Towing Plan, Mooring Plan, Maintenance Plan, and Environmental Plan.

The Towing Plan describes how the ship will be prepared for tow and safely towed from its present location to the permanent display site proposed by the applicant. The Towing Plan must comply with all U.S. Navy Tow Manual requirements, which can be found at *http://www.supsalv.org/pdf/towman.pdf.*

The Mooring Plan describes how the ship will be secured at its permanent display site during normal and extreme weather conditions (including the 100-year storm event) to prevent damage to the ship, its mooring system, the pier, and surrounding facilities. Provide evidence of availability of a facility for permanent mooring of the ship, either by ownership, existing lease, or by letter from the facility owners indicating a statement of intent to utilize such facilities. Address any requirement to obtain site-specific permits and/or municipality approvals required for the facility, to include but not limited to, Port Authority and Army Corps of Engineers approvals/permits, where required. The mooring location must be acceptable to the DON and not obstruct or interfere with navigation.

The Environmental Plan describes how the applicant will comply with all Federal, State and local environmental and public health & safety regulations and permit requirements. The applicant must also provide information necessary for the DON to complete an environmental assessment of the donation as required by the National Environmental Policy Act (NEPA), including the impact of the donation on the natural and man-made environment, local infrastructure, and evaluation of the socio-economic consequences of the donation.

The Maintenance Plan must describe plans for long-term, short-term, and daily maintenance of the vessel, including preservation and maintenance schedule, underwater hull inspections, emergency response and fire/flood/intrusion control, pest control, security, periodic dry-docking, and qualifications of the maintenance team.

c. The Curatorial/Museum Plan includes two parts: A Curatorial Plan and a Historic Management Plan. The Curatorial Plan must describe the qualifications for a professional curator (and curator staff, if necessary). The plan must also describe how the museum will collect and manage artifacts, including a statement of purpose and description of access, authority, and collection management responsibilities. The Historic Management Plan must describe how the museum will display the vessel and exhibits, including a description of the historical context of the ship, vessel restoration plans, historical subject matter that will be displayed with the ship, and exhibit display plans.

d. The Community Support Plan must include evidence of local support. Evidence of regional support should also be provided. This includes letters of endorsement from adjacent communities and counties, cities or states. Also describe how the location of the ship will encourage public visitation and tourism, become an integral part of the community, and how the ship will enhance community development. The Community Support Plan must also describe the benefit to the DON, including, but not limited to, addressing how the prospective donee may support DON recruiting efforts, the connection between the DON and the proposed berthing location, how veterans associations in the area are willing to support the vessel, how the prospective donee will honor veterans' contributions to the United States, and how the exhibit will commemorate those contributions and showcase Naval traditions.

The relative importance of each area that must be addressed in the donation application is as follows: Business/Financial Plan and Technical Plan are the most important criteria and are equal in importance. Within the

Technical Plan, the Mooring Plan is of greatest importance, and the Towing Plan, Maintenance Plan and Environmental Plan are individually of equal importance but of lesser importance to the Mooring Plan. The Curatorial/Museum Plan and Community Support Plan are of equal importance, but of lesser importance than the aforementioned plans.

Evaluation of the application(s) will be performed by the DON to ensure the application(s) are compliant with the minimum acceptable application criteria and requirements. In the event of multiple compliant applications for the same battleship, the DON will perform a comparative evaluation of the applications to determine the best qualified applicant. The adjectival ratings to be used for each criterion include: Outstanding, Good, Satisfactory, Marginal, and Unsatisfactory. The Secretary of the Navy or his designee will make the final donation decision.

Applicants should review NAVSEAINST 4520.1A for additional requirements on the application process. That instruction can be found at the Navy Inactive Ships Program Web site: *http://www.navsea.navy.mil/teamships/Inactiveships/donation*.

The Letter of Intent and donation application must be submitted to the Navy Inactive Ships Program Office in hard copy and electronically on a CD–ROM in either a MS Word document or word-searchable PDF format. The complete application should be mailed to: The Columbia Group, 1201 M Street, SE., Suite 020, Washington, DC 20003; marked for the Ship Donation Project Manager within six months of this notice. As stated above, the DON reserves the right to provide a reasonable extension for receipt of applications, or to reject a request for extension and to proceed with other applications received within the 6-month deadline. The DON also reserves the right to re-open the solicitation process at any point prior to donation of the vessel if doing so is in the DON's best interest.

FOR FURTHER INFORMATION CONTACT: Ship Donation Project Manager: Ms. Angela Rexrode; telephone number 202–781–4847 or e-mail at *angela.rexrode@navy.mil.*

Dated: May 13, 2010.

A.M. Vallandingham,

Lieutenant Commander, Judge Advocate General's Corps, U.S. Navy, Federal Register Liaison Officer.

[FR Doc. 2010–12351 Filed 5–21–10; 8:45 am]

BILLING CODE 3810–FF–P

DEPARTMENT OF DEFENSE

Department of the Navy

Preferred Supplier Program (PSP)

AGENCY: Department of the Navy, DoD.

ACTION: Notice of proposed policy letter.

SUMMARY: The Deputy Assistant Secretary of the Navy, Acquisition and Logistics Management (DASN (A&LM)), is soliciting comments that the Department of the Navy (DON) may use in drafting a policy that will establish a Preferred Supplier Program (PSP). Under the PSP, contractors that have demonstrated exemplary performance, at the corporate level; in the areas of cost, schedule, performance, quality, and business relations would be granted Preferred Supplier Status (PSS). Contractors that achieved PSS would receive more favorable contract terms and conditions in DON contracts. Upon approval of the policy by the Assistant Secretary of the Navy for Research, Development and Acquisition, DON will initiate the pilot phase of the PSP.

DATES: DON invites interested parties from both the public and private sectors to provide comments to be considered in the formulation of the final policy letter. In particular, DON encourages respondents to offer their views as discussed below, in Section D, "Solicitation of Public Comment."

Interested parties should submit comments, in writing, to the address below, on or before July 23, 2010.

ADDRESSES: Comments may be submitted by any of the following methods:

E-mail: preferredsupplier@navy.mil.

Facsimile: 703–614–9394.

Mail: DASN (A&LM), *Attn:* Clarence Belton, 1000 Navy Pentagon, Room BF992, Washington, DC 20350–1000.

Instructions: Please submit comments only and cite "Proposed DON PSP Policy Letter" in all correspondence. All comments received will be posted, without change or redaction, to *https://acquisition.navy.mil/rda/home/acquisition_one_source/business_opportunities/preferred_supplier,* so commenters should not include information that they do not wish to be posted (for example, personal or business-confidential).

FOR FURTHER INFORMATION CONTACT: Clarence Belton, 703–693–4006 or *clarence.belton@navy.mil.*

SUPPLEMENTARY INFORMATION:

A. Background

Companies in the private sector that have implemented PSPs have significantly improved performance. Cash flow, profit, and contract terms and conditions that reduce contractor costs and risk are powerful incentives that can be used to motivate contractors to perform at a high level. DON and its contractors negotiate these key components of the business arrangement contract by contract. As a result of this decentralized and individual approach, DON loses an extremely important opportunity. This policy would establish the PSP to recover that opportunity through the use of favorable contract terms and conditions that would be available to Preferred Suppliers (*i.e.,* suppliers that have demonstrated exemplary performance, at the corporate level, in the areas of cost, schedule, performance, quality, and business relations).

The proposed policy is now in the conceptual stage. After consideration of the comments, DON may publish a draft proposed policy letter for additional public comments.

B. Proposed Policy Letter Concepts

The general outline of the pilot phase of the PSP, to be established under the proposed policy letter, is set forth below.

DASN (A&LM) shall be responsible for the assessment of contractors under the PSP. DASN (A&LM) will confer PSS at the corporate level, and will not rate individual affiliates or subdivisions of corporations.

DASN (A&LM) shall use the Contractor Performance Assessment Reporting System (CPARS) as the baseline data during the pilot phase of the PSP. In the course of the pilot phase, DON also will identify other sources of data, including information available to Navy program offices and government contract administration organizations that the Department may use to supplement CPARS data in implementing the PSP. The factors that DASN (A&LM) will use to assess contractors during the pilot phase include, at a minimum, the following CPARS areas:

Technical (Quality of Product);
Schedule;
Cost Control;
Management Responsiveness;
Management of Key Personnel;
Utilization of Small Business;
Other CPARS Factors As Appropriate.

DASN (A&LM) shall assess Energy Efficiency for all contractors as an "excellence factor," in addition to the areas above.

During the pilot phase of the PSP, DON will use a 5-star system based upon the 5-color ratings used in CPARS, as follows:

CPARS	PSP
Red	0
Yellow	1
Green	2
Purple	3
Dark Blue	4

DON will use the CPARS conversion table above, based upon CPARS data, and, as appropriate, other sources of information and weighting factors. Contractors must achieve at least a 3–Star rating to be designated as a Preferred Supplier.

If a contractor provides documentation sufficient to establish that it has an Energy Efficiency Program, it will receive an additional star, up to a maximum rating of 5 Stars. A 5–Star rating can only be achieved if the contractor maintains an active Energy Efficiency Program, and otherwise has received a 4–Star rating. Failure to demonstrate an active Energy Efficiency Program will not diminish the contractor's PSP rating.

During each fiscal year, DASN (A&LM) shall reassess and rate the top 25 DON contractors. The top 25 DON contractors will be determined by the value of contract awards for the most recent fiscal year. Other contractors may apply to join the PSP. DASN (A&LM) shall evaluate all applicants currently eligible for assessment in CPARS using the same process as it does to evaluate the top 25 contractors. DASN (A&LM) will establish a 30-day application period that will begin no later than January 1, annually.

In negotiating contracts with Preferred Suppliers, DON contracting officers will be authorized to offer some or all of the following more favorable contract terms and conditions:

○ More favorable progress payments.

○ Recognition of PSS in the development of profit or fee based upon weighted guidelines.

○ Tailored contract reporting requirements.

○ Special award fee pools.

PSS shall not be used as a factor or sub-factor in any source selection. However, where the contracting officer has a reasonable belief that a Preferred Supplier may submit a bid or proposal, the solicitation shall contain terms and conditions that will be applicable, after award, only if the successful offeror is a Preferred Supplier.

These special terms and conditions, applicable to contracts with Preferred Suppliers, shall be consistent with the limitations specified in regulations promulgated pursuant to the Federal Acquisition Regulatory System.

C. Solicitation of Public Comment

DON invites interested parties from both the public and private sectors to provide comments for consideration in the formulation of a policy letter establishing the PSP. In particular, DON seeks to better understand how to incentivize contractors, at the corporate level, to achieve sustained superior performance in the areas of cost, schedule, performance, quality, and business relations. Accordingly, DON welcomes feedback regarding the following questions.

1. What clauses are currently being used in government subcontracts, and commercial contracts and subcontracts, to incentivize superior performance, at the corporate level, in the areas of cost, schedule, performance, quality, and business relations?

2. What solicitation provisions, contract clauses, and performance incentives will provide contractors with the greatest motivation to achieve PSS?

3. Energy Efficiency is a critical DON requirement significantly impacting the successful achievement of DON's missions. How should a contractor's use of energy, as it relates to the entire life-cycle of a product—design, manufacture, use, maintenance, and disposal—be considered in the designation of Preferred Suppliers?

4. Is there any other aspect of the proposed PSP on which you wish to comment?

Dated: May 14, 2010.

A. M. Vallandingham,

Lieutenant Commander, Office of the Judge Advocate General, U.S. Navy, Federal Register Liaison Officer.

[FR Doc. 2010–12349 Filed 5–21–10; 8:45 am]

BILLING CODE 3810–FF–P

DEPARTMENT OF EDUCATION

Office of Innovation and Improvement; Overview Information; Charter Schools Program (CSP) Grants for Replication and Expansion of High-Quality Charter Schools; Notice Inviting Applications for New Awards for Fiscal Year (FY) 2010

Catalog of Federal Domestic Assistance (CFDA) Number: 84.282M.

Dates:

Applications Available: May 24, 2010.

Date of Pre-Application Meeting: June 8, 2010.

Deadline for Transmittal of Applications: July 7, 2010.

Deadline for Intergovernmental Review: September 7, 2010.

Full Text of Announcement

I. Funding Opportunity Description

Purpose of Program: The purpose of the CSP is to increase national understanding of the charter school model and to expand the number of high-quality charter schools available to students across the Nation by providing financial assistance for the planning, program design, initial implementation, or expansion of charter schools, and to evaluate the effects of charter schools, including their effects on students, student academic achievement, staff, and parents.

The purpose of this competition (CFDA 84.282M) is to award grants to eligible applicants to enable them to replicate or expand high-quality charter schools with demonstrated records of success, including success in increasing student academic achievement. Eligible applicants may use their CSP funds to expand the enrollment of one or more existing charter schools by substantially increasing the number of available seats per school, or to open one or more new charter schools that are based on the charter school model for which the eligible applicant has presented evidence of success.

Priorities: This competition includes one absolute priority, three competitive preference priorities, and one invitational priority. We are establishing these priorities for the FY 2010 grant competition and any subsequent year in which we make awards from the list of unfunded applicants from this competition, in accordance with section 437(d)(1) of the General Education Provisions Act (GEPA), 20 U.S.C. 1232(d)(1).

Absolute Priority: This priority is an absolute priority. Under 34 CFR 75.105(c)(3) we consider only applications that meet this priority.

This priority is:

Experience Operating or Managing High-Quality Charter Schools

The applicant must have experience operating or managing more than one high-quality charter school. For purposes of this priority, a *high-quality charter school* is a school that shows evidence of strong academic results, based on the criteria described in Selection Criterion (a), and has no significant issues in the areas of student safety, financial management, or statutory or regulatory compliance. For purposes of this competition, *significant issue* means something that did, will, or could lead to the revocation of a school's charter.

Competitive Preference Priorities: These priorities are competitive

preference priorities. Under 34 CFR 75.105(c)(2)(i) we will award up to an additional 30 points to an application, depending on how well the application meets one or more of these priorities.

Note: In order to receive preference under these competitive preference priorities, the applicant must identify the priority or priorities that it believes it meets and provide documentation supporting its claims.

These priorities are:

Competitive Preference Priority 1—Low-Income Demographic (up to 10 points). To meet this competitive preference priority, the applicant must demonstrate that at least 60 percent of all students in the charter schools it operates or manages are individuals from low-income families.

For purposes of this priority, the term *individual from a low-income family* means an individual who is determined by a State educational agency (SEA) or local educational agency (LEA) to be a child, ages 5 through 17, from a low-income family, on the basis of (i) data used by the Secretary to determine allocations under section 1124 of the Elementary and Secondary Education Act of 1965, as amended (ESEA), (ii) data on children eligible for free or reduced-price lunches under the National School Lunch Act, (iii) data on children in families receiving assistance under part A of title IV of the Social Security Act, or (iv) data on children eligible to receive medical assistance under the Medicaid program under Title XIX of the Social Security Act, or (v) an alternate method that combines or extrapolates from those data (*see* section 1707(3) of the ESEA).

Competitive Preference Priority 2—School Improvement (up to 10 points). To meet this competitive preference priority, the applicant must demonstrate that its proposed replication or expansion of one or more high-quality charter schools is in partnership with, and designed to assist, one or more LEAs in implementing academic or structural interventions to serve students attending schools that have been identified for improvement, corrective action, closure, or restructuring under section 1116 of the ESEA, and as described in the notice of final requirements for the School Improvement Grants, published in the **Federal Register** on December 10, 2009 (74 FR 65618).

Competitive Preference Priority 3—Matching (up to 10 points). To meet this competitive preference priority, the applicant must commit to provide matching funds in an amount equal to or greater than 25 percent of the grant award to support its proposed project under this program. In order to secure matching funds and meet this competitive preference priority, the applicant may enter into a partnership or otherwise collaborate with other entities, including philanthropic organizations.

In order to receive points under this competitive preference priority, the matching funds must be included in the proposed budget and used to cover allowable costs. In addition, the applicant must include in its application assurances documentation demonstrating that it will be able to secure the specified matching funds. An applicant that is approved for a grant must have the proposed matching funds in place prior to receiving the grant award.

Invitational Priority: This priority is an invitational priority. Under 34 CFR 75.105(c)(1) we do not give an application that meets this invitational priority a competitive or absolute preference over other applications.

This priority is:

Students With Disabilities and English Learners

The Secretary is particularly interested in applicants that demonstrate through participant, achievement, and outcome data for students with disabilities and English learners—

(1) Prior success in improving educational achievement and outcomes for students with disabilities and English learners; and

(2) That the model they propose to replicate or expand serves students with disabilities and English learners at rates comparable to the rates of students with disabilities and English learners in the LEAs in which their schools operate.

Requirements

(1) Grantees under this program must use the grant funds to replicate or substantially expand an existing high-quality charter school that is based on the model or models for which the applicant has presented evidence of success.

For purposes of this competition, the term *replicate* means to open one or more new charter schools that are based on the charter school model or models for which the applicant has presented evidence of success.

In addition, in the context of this competition, the term *substantially expand* means to increase the enrollment of one or more existing charter schools by more than 50 percent or to add at least two grades to an existing charter school over the course of the grant.

(2) Applicants approved for funding under this competition must attend a two-day meeting for project directors in the Washington, DC area during each year of the project. Applicants are encouraged to include the cost of attending this meeting in their proposed budgets.

Waiver of Proposed Rulemaking: Under the Administrative Procedure Act (5 U.S.C. 553) the Department generally offers interested parties the opportunity to comment on proposed priorities, selection criteria, application requirements, and definitions. Section 437(d)(1) of GEPA, however, allows the Secretary to exempt from rulemaking requirements, regulations governing the first grant competition under a new or substantially revised program authority. This is the first grant competition for the replication and expansion of high-quality charter schools under the Charter Schools Program authority, as described in the Consolidated Appropriations Act, 2010 (Pub. L. 111–117), and, therefore, qualifies for this exemption. In order to ensure timely grant awards, the Secretary has decided to forgo public comment on the priorities, selection criteria, requirements, and definitions in this notice under section 437(d)(1) of GEPA. These priorities, selection criteria, requirements, and definitions will apply to the FY 2010 grant competition and any subsequent year in which we make awards from the list of unfunded applicants from this competition.

Program Authority: 20 U.S.C. 7221–7221j; Consolidated Appropriations Act, 2010, Division D, Title III, Pub. L. 111–117.

Applicable Regulations: The Education Department General Administrative Regulations (EDGAR) in 34 CFR parts 74, 75, 76, 77, 79, 80, 81, 82, 84, 85, 86, 97, 98, and 99.

Note: The regulations in 34 CFR part 79 apply to all applicants except Federally recognized Indian Tribes.

Note: The regulations in 34 CFR part 86 apply only to institutions of higher education.

Note: The regulations in 34 CFR part 99 apply only to an educational agency or institution.

II. Award Information

Type of Award: Discretionary grants.

Estimated Available Funds: The FY 2010 appropriation for the Charter Schools Program is $256,031,000, of which the Department will use $50,000,000 for this competition. Contingent upon the availability of funds, and the quality of the applications, we may make additional

awards later in FY 2010 and in FY 2011 from the list of unfunded applicants from this competition.

Estimated Range of Awards: $1,000,000 to $15,000,000 per grant.

Estimated Average Size of Awards: $7,000,000 per grant.

Estimated Number of Awards: 5–8.

Note: The Department is not bound by any estimates in this notice.

Project Period: Up to five years.

III. Eligibility Information

1. *Eligible Applicants:* Non-profit charter management organizations (CMOs) and other entities that are not for-profit entities. A CMO is an organization that operates or manages multiple charter schools by centralizing or sharing certain functions and resources among schools. Eligible applicants may also apply as a group or consortium.

2. *Cost-Sharing or Matching:* This competition does not require cost-sharing or matching. This competition provides a competitive preference priority for applications that commit to provide matching funds in an amount equal to or greater than 25 percent of the grant award.

IV. Application and Submission Information

1. *Address to Request Application Package:* Erin Pfeltz or Richard Payton, U.S. Department of Education, 400 Maryland Avenue, SW., Room 4W255, Washington, DC 20202–5970. Telephone: (202) 205–3525 or (202) 453–7698 or by e-mail: *erin.pfeltz@ed.gov* or *richard.payton@ed.gov.*

If you use a telecommunications device for the deaf (TDD), call the Federal Relay Service (FRS), toll free, at 1–800–877–8339.

Individuals with disabilities can obtain a copy of the application package in an accessible format (*e.g.,* Braille, large print, audiotape, or computer diskette) by contacting the program contact person listed in this section.

2. *Content and Form of Application Submission:* Requirements concerning the content of an application, together with the forms you must submit, are in the application package for this competition.

Page Limit: The application narrative (Part III of the application) is where you, the applicant, address the selection criteria that reviewers use to evaluate your application. The Secretary strongly encourages applicants to limit Part III to the equivalent of no more than 60 pages, using the following standards:

- A "page" is 8.5″ × 11″, on one side only, with 1″ margins at the top, bottom, and both sides.
- Double space (no more than three lines per vertical inch) all text in the application narrative, including titles, headings, footnotes, quotations, references, and captions, as well as all text in charts, tables, figures, and graphs.
- Use a font that is either 12 point or larger or no smaller than 10 pitch (characters per inch).
- Use one of the following fonts: Times New Roman, Courier, Courier New, or Arial. An application submitted in any other font (including Times Roman or Arial Narrow) will not be accepted.

The page limit does not apply to Part I, the cover sheet; Part II, the budget section, including the narrative budget justification; Part IV, the assurances and certifications; or the one-page abstract, the résumés, the bibliography, or the letters of support. However, the page limit does apply to all of the application narrative section (Part III).

3. *Submission Dates and Times: Applications Available:* May 24, 2010.

Date of Pre-Application Meeting: The Department will hold a pre-application meeting for prospective applicants on June 8, 2010, from 8:30 a.m. to 11:00 a.m. at the U.S. Department of Education, Barnard Auditorium, 400 Maryland Avenue, SW., Washington, DC. Interested parties are invited to participate in this meeting to discuss the purpose of the program, absolute and competitive priorities, selection criteria, application requirements, submission requirements, and reporting requirements. Interested parties may participate in this meeting either by conference call or in person. This site is accessible by Metro on the Blue, Orange, Green, and Yellow lines at the Seventh Street and Maryland Avenue exit of the L'Enfant Plaza station. After the meeting, program staff will be available from 11:00 a.m. to 12:00 p.m. on that same day to provide information and technical assistance through individual consultation.

Individuals interested in attending this meeting are encouraged to pre-register by e-mailing their name, organization, and contact information with the subject heading *PRE–APPLICATION MEETING* to *CharterSchools@ed.gov.* There is no registration fee for attending this meeting.

For further information about the pre-application meeting, contact Erin Pfeltz or Richard Payton, U.S. Department of Education, 400 Maryland Avenue, SW., Room 4W255, Washington, DC 20202–5970. Telephone: (202) 205–3525 or (202) 453–7698 or by e-mail: *erin.pfeltz@ed.gov* or *richard.payton@ed.gov.*

Assistance to Individuals With Disabilities at the Pre-Application Meeting

The meeting site is accessible to individuals with disabilities. If you will need an auxiliary aid or service to participate in the meeting (*e.g.,* interpreting service, assistive listening device, or materials in an alternate format), notify the contact person listed in this notice at least two weeks before the scheduled meeting date. Although we will attempt to meet a request we receive after that date, we may not be able to make available the requested auxiliary aid or service because of insufficient time to arrange it.

Deadline for Transmittal of Applications: July 7, 2010.

Applications for grants under this program must be submitted electronically using the Electronic Grant Application System (e-Application) accessible through the Department's e-Grants site. For information (including dates and times) about how to submit your application electronically, or in paper format by mail or hand delivery if you qualify for an exception to the electronic submission requirement, please refer to section IV. 6. *Other Submission Requirements* of this notice.

We do not consider an application that does not comply with the deadline requirements.

Individuals with disabilities who need an accommodation or auxiliary aid in connection with the application process should contact the person listed under *For Further Information Contact* in section VII of this notice. If the Department provides an accommodation or auxiliary aid to an individual with a disability in connection with the application process, the individual's application remains subject to all other requirements and limitations in this notice.

Deadline for Intergovernmental Review: September 7, 2010.

4. *Intergovernmental Review:* This program is subject to Executive Order 12372 and the regulations in 34 CFR part 79. Information about Intergovernmental Review of Federal Programs under Executive Order 12372 is in the application package for this program.

5. *Funding Restrictions:* Pursuant to section 5204(f)(3) of the ESEA (20 U.S.C. 7221c(f)(3)), grantees under this program must use the grant funds for—

(a) Post-award planning and design of the educational program, which may

include: (i) Refinement of the desired educational results and of the methods for measuring progress toward achieving those results; and (ii) professional development of teachers and other staff who will work in the charter school; and

(b) Initial implementation or expansion of the charter school, which may include: (i) Informing the community about the school; (ii) acquiring necessary equipment and educational materials and supplies; (iii) acquiring or developing curriculum materials; and (iv) other initial operational costs that cannot be met from State or local sources.

Note: Use of up to 15 percent of grant funds for initial operational costs associated with the expansion or improvement of the eligible entity's oversight or management of its schools is permitted provided that: (i) The specific schools being created or expanded under this grant are beneficiaries of such expansion or improvement, and (ii) such expansion or improvement is intended to improve the applicant's ability to manage or oversee the charter schools created or expanded under this grant.

Applicants should ensure that all costs included in the proposed budget are *reasonable and necessary* in light of the goals and objectives of the proposed project. Any costs determined by the Secretary to be unreasonable or unnecessary will be removed from the final approved budget. A charter school that receives funds under this competition is ineligible to receive funds for the same purpose under section 5202(c)(2) of the ESEA, including for planning and program design or the initial implementation of a charter school (*i.e.,* CFDA 84.282A or 84.282B).

We reference additional regulations outlining funding restrictions in the *Applicable Regulations* section of this notice.

6. *Data Universal Numbering System Number, Taxpayer Identification Number, and Central Contractor Registry:* To do business with the Department of Education, (1) you must have a Data Universal Numbering System (DUNS) number and a Taxpayer Identification Number (TIN); (2) you must register both of those numbers with the Central Contractor Registry (CCR), the Government's primary registrant database; and (3) you must provide those same numbers on your application.

You can obtain a DUNS number from Dun and Bradstreet. A DUNS number can be created within one business day.

If you are a corporate entity, agency, institution, or organization, you can obtain a TIN from the Internal Revenue Service. If you are an individual, you can obtain a TIN from the Internal Revenue Service or the Social Security Administration. If you need a new TIN, please allow 2–5 weeks for your TIN to become active.

The CCR registration process may take five or more business days to complete. If you are currently registered with the CCR, you may not need to make any changes. However, please make certain that the TIN associated with your DUNS number is correct. Also note that you will need to update your CCR registration on an annual basis. This may take three or more business days to complete.

7. *Other Submission Requirements.* Applications for grants under this program must be submitted electronically unless you qualify for an exception to this requirement in accordance with the instructions in this section.

a. Electronic Submission of Applications

Applications for grants under the Charter School Program Grants for Replication and Expansion of High-Quality Charter Schools—CFDA Numbers 84.282M must be submitted electronically using e-Application, accessible through the Department's e-Grants Web site at: *http://e-grants.ed.gov.*

We will reject your application if you submit it in paper format unless, as described elsewhere in this section, you qualify for one of the exceptions to the electronic submission requirement *and* submit, no later than two weeks before the application deadline date, a written statement to the Department that you qualify for one of these exceptions. Further information regarding calculation of the date that is two weeks before the application deadline date is provided later in this section under *Exception to Electronic Submission Requirement.*

While completing your electronic application, you will be entering data online that will be saved into a database. You may not e-mail an electronic copy of a grant application to us.

Please note the following:

- You must complete the electronic submission of your grant application by 4:30 p.m., Washington, DC time, on the application deadline date. E-Application will not accept an application for this program after 4:30 p.m., Washington, DC time, on the application deadline date. Therefore, we strongly recommend that you do not wait until the application deadline date to begin the application process.
- The hours of operation of the e-Grants Web site are 6:00 a.m. Monday until 7:00 p.m. Wednesday; and 6:00 a.m. Thursday until 8:00 p.m. Sunday, Washington, DC time. Please note that, because of maintenance, the system is unavailable between 8:00 p.m. on Sundays and 6:00 a.m. on Mondays, and between 7:00 p.m. on Wednesdays and 6:00 a.m. on Thursdays, Washington, DC time. Any modifications to these hours are posted on the e-Grants Web site.
- You will not receive additional point value because you submit your application in electronic format, nor will we penalize you if you qualify for an exception to the electronic submission requirement, as described elsewhere in this section, and submit your application in paper format.
- You must submit all documents electronically, including all information you typically provide on the following forms: The Application for Federal Assistance (SF 424), the Department of Education Supplemental Information for SF 424, Budget Information—Non-Construction Programs (ED 524), and all necessary assurances and certifications. You must attach any narrative sections of your application as files in a .DOC (document), .RTF (rich text), or .PDF (Portable Document) format. If you upload a file type other than the three file types specified in this paragraph or submit a password protected file, we will not review that material.
- Your electronic application must comply with any page limit requirements described in this notice.
- Prior to submitting your electronic application, you may wish to print a copy of it for your records.
- After you electronically submit your application, you will receive an automatic acknowledgment that will include a PR/Award number (an identifying number unique to your application).
- Within three working days after submitting your electronic application, fax a signed copy of the SF 424 to the Application Control Center after following these steps:

(1) Print SF 424 from e-Application.

(2) The applicant's Authorizing Representative must sign this form.

(3) Place the PR/Award number in the upper right hand corner of the hard-copy signature page of the SF 424.

(4) Fax the signed SF 424 to the Application Control Center at (202) 245–6272.

- We may request that you provide us original signatures on other forms at a later date.

Application Deadline Date Extension in Case of e-Application Unavailability:

If you are prevented from electronically submitting your application on the application deadline date because e-Application is unavailable, we will grant you an extension of one business day to enable you to transmit your application electronically, by mail, or by hand delivery. We will grant this extension if—

(1) You are a registered user of e-Application and you have initiated an electronic application for this competition; and

(2) (a) E-Application is unavailable for 60 minutes or more between the hours of 8:30 a.m. and 3:30 p.m., Washington, DC time, on the application deadline date; or

(b) E-Application is unavailable for any period of time between 3:30 p.m. and 4:30 p.m., Washington, DC time, on the application deadline date.

We must acknowledge and confirm these periods of unavailability before granting you an extension. To request this extension or to confirm our acknowledgment of any system unavailability, you may contact either (1) the person listed elsewhere in this notice under *For Further Information Contact* (*see* VII. Agency Contact) or (2) the e-Grants help desk at 1–888–336–8930. If e-Application is unavailable due to technical problems with the system and, therefore, the application deadline is extended, an e-mail will be sent to all registered users who have initiated an e-Application. Extensions referred to in this section apply only to the unavailability of e-Application.

Exception to Electronic Submission Requirement: You qualify for an exception to the electronic submission requirement, and may submit your application in paper format, if you are unable to submit an application through e-Application because—

- You do not have access to the Internet; or
- You do not have the capacity to upload large documents to e-Application; *and*
- No later than two weeks before the application deadline date (14 calendar days or, if the fourteenth calendar day before the application deadline date falls on a Federal holiday, the next business day following the Federal holiday), you mail or fax a written statement to the Department, explaining which of the two grounds for an exception prevents you from using the Internet to submit your application. If you mail your written statement to the Department, it must be postmarked no later than two weeks before the application deadline date. If you fax your written statement to the Department, we must receive the faxed statement no later than two weeks before the application deadline date.

Address and mail or fax your statement to: Erin Pfeltz, U.S. Department of Education, 400 Maryland Avenue, SW., Room 4W255, Washington, DC 20202–5970. FAX: (202) 205–5630.

Your paper application must be submitted in accordance with the mail or hand delivery instructions described in this notice.

b. Submission of Paper Applications by Mail

If you qualify for an exception to the electronic submission requirement, you may mail (through the U.S. Postal Service or a commercial carrier) your application to the Department. You must mail the original and two copies of your application, on or before the application deadline date, to the Department at the following address: U.S. Department of Education, Application Control Center, Attention: (CFDA Number 84.282M), LBJ Basement Level 1, 400 Maryland Avenue, SW., Washington, DC 20202–4260.

You must show proof of mailing consisting of one of the following:

(1) A legibly dated U.S. Postal Service postmark.

(2) A legible mail receipt with the date of mailing stamped by the U.S. Postal Service.

(3) A dated shipping label, invoice, or receipt from a commercial carrier.

(4) Any other proof of mailing acceptable to the Secretary of the U.S. Department of Education.

If you mail your application through the U.S. Postal Service, we do not accept either of the following as proof of mailing:

(1) A private metered postmark.

(2) A mail receipt that is not dated by the U.S. Postal Service.

If your application is postmarked after the application deadline date, we will not consider your application.

Note: The U.S. Postal Service does not uniformly provide a dated postmark. Before relying on this method, you should check with your local post office.

c. Submission of Paper Applications by Hand Delivery

If you qualify for an exception to the electronic submission requirement, you (or a courier service) may deliver your paper application to the Department by hand. You must deliver the original and two copies of your application, by hand, on or before the application deadline date, to the Department at the following address: U.S. Department of Education, Application Control Center, Attention: (CFDA Number 84.282M), 550 12th Street, SW., Room 7041, Potomac Center Plaza, Washington, DC 20202–4260.

The Application Control Center accepts hand deliveries daily between 8:00 a.m. and 4:30 p.m., Washington, DC time, except Saturdays, Sundays, and Federal holidays.

Note for Mail or Hand Delivery of Paper Applications: If you mail or hand deliver your application to the Department—

(1) You must indicate on the envelope and—if not provided by the Department—in Item 11 of the SF 424 the CFDA number, including suffix letter, if any, of the competition under which you are submitting your application; and

(2) The Application Control Center will mail to you a notification of receipt of your grant application. If you do not receive this grant notification within 15 business days from the application deadline date, you should call the U.S. Department of Education Application Control Center at (202) 245–6288.

V. Application Review Information

1. *Application Requirements:* Applicants applying for CSP grant funds must address both the following application requirements, which are based on the statutory requirements under the program, and the selection criteria described in this notice. An applicant may choose to respond to the application requirements in the context of its responses to the selection criteria.

(a) Describe the objectives of the project for replicating or substantially expanding high-quality charter schools and the methods by which the applicant will determine its progress toward achieving those objectives.

(b) Describe how the applicant currently operates or manages the charter schools for which it has presented evidence of success, and how the proposed new or expanded charter schools will be operated or managed. Include a description of central office functions, governance, daily operations, financial management, human resources management, and instructional management. If applying as a group or consortium, describe the roles and responsibilities of each member of the group or consortium and how each member will contribute to this project.

(c) Describe how the applicant will ensure that each proposed new or expanded charter school receives its commensurate share of Federal education funds that are allocated by formula each year, including during the first year of operation of the school and any year in which the school's enrollment expands significantly.

(d) Describe the educational program to be implemented in the proposed new or expanded charter schools, including

how the program will enable all students (including educationally disadvantaged students) to meet challenging State student academic achievement standards, the grade levels or ages of students to be served, and the curriculum and instructional practices to be used. For purposes of this competition, the term "educationally disadvantaged students" includes, but is not necessarily limited to, economically disadvantaged children, English learners, migratory children, children with disabilities, Native American children, and neglected or delinquent children.

(e) Describe the administrative relationship between the charter schools to be replicated or expanded by the applicant and the authorized public chartering agency.

(f) Describe how the applicant will provide for continued operation of the proposed new or expanded charter schools once the Federal grant has expired.

(g) Describe how parents and other members of the community will be involved in the planning, program design, and implementation of the proposed new or expanded charter schools.

(h) Include a request and justification for waivers of any Federal statutory or regulatory provisions that the applicant believes are necessary for the successful operation of the proposed new or expanded charter schools and a description of any State or local rules, generally applicable to public schools, that will be waived for, or otherwise not apply to, such charter schools.

(i) Describe how the grant funds will be used, including how these funds will be used in conjunction with other Federal programs administered by the Secretary, and with any matching funds.

(j) Describe how students in the community, including students with disabilities, English learners and other educationally disadvantaged students, will be informed about the proposed new or expanded charter schools and given an equal opportunity to attend such schools. For a definition of *educationally disadvantaged students, see* paragraph (d) of these *Application Requirements.*

(k) Describe how the proposed new or expanded charter schools that are considered to be LEAs under State law, or the LEAs in which such charter schools are located, will comply with sections 613(a)(5) and 613(e)(1)(B) of the Individuals with Disabilities Education Act.

(l) Provide information on any significant issues in the areas of student safety, financial management, and statutory or regulatory compliance. As noted in the absolute priority, for purposes of this competition, "significant" means something that did, will, or could lead to the revocation of a school's charter.

2. *Selection Criteria.* We are establishing these selection criteria for the FY 2010 grant competition and any subsequent year in which we make awards from the list of unfunded applicants from this competition, in accordance with section 437(d)(1) of GEPA, 20 U.S.C. 1232(d)(1). The maximum possible score for all the criteria in this section is 100 points. The maximum possible score for each criterion is indicated in parentheses following the criterion.

In evaluating an application, the Secretary considers the following criteria:

(a) *Quality of the eligible applicant (50 points).* In determining the quality of the applicant, the Secretary considers the following factors:

(i) The degree to which the applicant has demonstrated success in significantly increasing student academic achievement and attainment for all students, including educationally disadvantaged students, served by charter schools operated or managed by the applicant. For a definition of *educationally disadvantaged students, see* paragraph (d) of the *Application Requirements* in this notice.

(ii) The degree to which the applicant has demonstrated success in closing historic achievement gaps for the subgroups of students described in section 1111(b)(2)(C)(v)(II).

(iii) The degree to which the applicant has achieved results for low-income and minority students that are significantly above the average academic achievement results for such students in the State.

Applicants are invited to submit objective data that they believe would provide relevant information in support of these three factors, along with comparison data for similar schools, where available. In particular, the Secretary is interested in the following data: (1) Performance (school-wide and by subgroup) on statewide tests of all charter schools operated or managed by the applicant as compared to all students in other schools in the State or States at the same grade level, and as compared with other schools serving similar demographics of students; (2) annual student attendance and retention rates (school-wide and by subgroup), and comparisons with other similar schools; (3) where applicable and available, high school graduation rates, college attendance rates, and college persistence rates (school-wide and by subgroup) of students attending schools operated or managed by the applicant. When reporting data for schools in States that may have particularly demanding or low standards of proficiency (for example, *see* the report available at *http://nces.ed.gov/nationsreportcard/pdf/studies/2010456.pdf)*, applicants are invited to discuss how their academic success might be considered against applicants from across the country.

(b) *Contribution in assisting educationally disadvantaged students (15 points).* The contribution the proposed project will make in assisting educationally disadvantaged students served by the applicant to meet or exceed State academic content standards and State student academic achievement standards, and to graduate college- and career-ready. For a definition of *educationally disadvantaged students, see* paragraph (d) of the *Application Requirements* in this notice.

(c) *Quality of the project design (10 points).* The Secretary considers the quality of the design of the proposed project. In determining the quality of the design of the proposed project, the Secretary considers—

(i) The extent to which the goals, objectives, and outcomes to be achieved by the proposed project are clearly specified, measurable, and attainable. Applicants proposing to open schools serving substantially different populations than those currently served by the model for which they have demonstrated evidence of success should address the attainability of outcomes given this difference.

(ii) The extent to which the design for implementing and evaluating the proposed project will result in information to guide possible replication of project activities or strategies, including information about the effectiveness of the approach or strategies employed by the project.

(d) *Quality of the management plan (25 points).* The Secretary considers the quality of the management plan and personnel to replicate and expand high-quality charter schools. In determining the quality of the management plan and personnel for the proposed project, the Secretary considers:

(i) The adequacy of the management plan to achieve the objectives of the proposed project on time and within budget, including clearly defined responsibilities, timelines, and milestones for accomplishing project tasks.

(ii) The business plan for increasing, sustaining, and ensuring the quality and

performance of charter schools opened under this program beyond the initial period of Federal funding, including, but not limited to facilities, financials, central office, academics, governance, oversight, and human resources of the schools.

(iii) A multi-year financial and operating model for the organization, as well as a demonstrated commitment of current and future partners, and evidence of broad support form stakeholders critical to the project's long-term success.

(iv) A plan for closing charter schools supported, overseen, or managed by the applicant that do not meet high standards of quality.

(v) The qualifications, including relevant training and experience, of the project director, CEO/organization leader, and key project personnel, especially in managing projects of the size and scope of the proposed project.

VI. Award Administration Information

1. *Award Notices:* If your application is successful, we notify your U.S. Representative and U.S. Senators and send you a Grant Award Notification (GAN). We may notify you informally, also.

If your application is not evaluated or not selected for funding, we notify you.

2. *Administrative and National Policy Requirements:* We identify administrative and national policy requirements in the application package and reference these and other requirements in the *Applicable Regulations* section of this notice.

We reference the regulations outlining the terms and conditions of an award in the *Applicable Regulations* section of this notice and include these and other specific conditions in the GAN. The GAN also incorporates your approved application as part of your binding commitments under the grant.

3. *Reporting:* At the end of your project period, you must submit a final performance report, including financial information, as directed by the Secretary. If you receive a multi-year award, you must submit an annual performance report that provides the most current performance and financial expenditure information as directed by the Secretary in 34 CFR 75.118. The Secretary may also require more frequent performance reports under 34 CFR 75.720(c). For specific requirements on reporting, please go to *http://www.ed.gov/fund/grant/apply/appforms/appforms.html*.

4. *Performance Measures:* The goal of the CSP is to support the creation and development of a large number of high-quality charter schools that are free from State or local rules that inhibit flexible operation, are held accountable for enabling students to reach challenging State performance standards, and are open to all students. The Secretary has two performance indicators to measure progress towards this goal: (1) The number of charter schools in operation around the Nation, and (2) the percentage of fourth- and eighth-grade charter school students who are achieving at or above the proficient level on State examinations in mathematics and reading/language arts. Additionally, the Secretary has established the following measure to examine the efficiency of the CSP: Federal cost per student in implementing a successful school (defined as a school in operation for three or more consecutive years).

All grantees will be expected to submit an annual performance report documenting their contribution in assisting the Department in meeting these performance measures.

VII. Agency Contact

For Further Information Contact: Erin Pfeltz or Richard Payton, U.S. Department of Education, 400 Maryland Avenue, SW., Room 4W255, Washington, DC 20202–5970. Telephone: (202) 205–3525 or (202) 453–7698 or by e-mail: *erin.pfeltz@ed.gov* or *richard.payton@ed.gov.*

If you use a TDD, call the FRS, toll free, at 1–800–877–8339.

VIII. Other Information

Accessible Format: Individuals with disabilities can obtain this document and a copy of the application package in an accessible format (*e.g.,* braille, large print, audiotape, or computer diskette) on request to the program contact person listed under For Further Information Contact in section VII of this notice.

Electronic Access to This Document: You can view this document, as well as all other documents of this Department published in the **Federal Register**, in text or Adobe Portable Document Format (PDF) on the Internet at the following site: *http://www.ed.gov/news/fedregister.* To use PDF you must have Adobe Acrobat Reader, which is available free at this site.

Note: The official version of this document is the document published in the **Federal Register**. Free Internet access to the official edition of the **Federal Register** and the Code of Federal Regulations is available on GPO Access at: *http://www.gpoaccess.gov/nara/index.html.*

Dated: May 19, 2010.

James H. Shelton, III,

Assistant Deputy Secretary for Innovation and Improvement.

[FR Doc. 2010–12436 Filed 5–21–10; 8:45 am]

BILLING CODE 4000–01–P

DEPARTMENT OF ENERGY

Federal Energy Regulatory Commission

Combined Notice of Filings #1

May 13, 2010.

Take notice that the Commission received the following electric rate filings:

Docket Numbers: ER10–895–002.
Applicants: The Detroit Edison Company.
Description: Detroit Edison Company submits Second Revised Service agreement 12 to FERC Electric tariff, Original Volume 4.
Filed Date: 05/12/2010.
Accession Number: 20100512–0215.
Comment Date: 5 p.m. Eastern Time on Wednesday, June 02, 2010.

Docket Numbers: ER10–1230–000.
Applicants: The Detroit Edison Company.
Description: Detroit Edison Company submits an unexecuted service agreement.
Filed Date: 05/12/2010.
Accession Number: 20100512–0217.
Comment Date: 5 p.m. Eastern Time on Wednesday, June 02, 2010.

Docket Numbers: ER10–1231–000.
Applicants: The Detroit Edison Company.
Description: Detroit Edison Company submits unexecuted Wholesale Distribution Service Agreement.
Filed Date: 05/12/2010.
Accession Number: 20100512–0216.
Comment Date: 5 p.m. Eastern Time on Wednesday, June 02, 2010.

Docket Numbers: ER10–1232–000.
Applicants: Tampa Electric Company.
Description: Tampa Electric Company submits Second Revised Sheet 94 *et al.* for inclusion in its open access transmission tariff.
Filed Date: 05/12/2010
Accession Number: 20100512–0214.
Comment Date: 5 p.m. Eastern Time on Wednesday, June 02, 2010.

Docket Numbers: ER10–1233–000.
Applicants: Southwest Power Pool, Inc.
Description: Southwest Power Pool Inc. submits an unexecuted Large Generator Interconnection Agreement.
Filed Date: 05/12/2010.
Accession Number: 20100513–0202.

Comment Date: 5 p.m. Eastern Time on Wednesday, June 02, 2010.

Docket Numbers: ER10–1236–000.

Applicants: Arizona Public Service Company.

Description: Arizona Public Service Company submits amendment to its Cost-based Tariff, FERC Electric Tariff Volume 5.

Filed Date: 05/13/2010.

Accession Number: 20100513–0215.

Comment Date: 5 p.m. Eastern Time on Thursday, June 03, 2010.

Docket Numbers: ER10–1237–000.

Applicants: Westar Energy, Inc.

Description: Westar Energy, Inc. submits an executed Cost-Based Agreement for Wholesale Power Sales Service from Generating Assets Likely to Participate dated 4/29/2010.

Filed Date: 05/13/2010.

Accession Number: 20100513–0214.

Comment Date: 5 p.m. Eastern Time on Thursday, June 03, 2010.

Docket Numbers: ER10–1240–000.

Applicants: The Cleveland Electric Illuminating Comp.

Description: The Cleveland Electric Illuminating Company submits tariff filing per 35.12: Market-Based Power Sales Tariff to be effective 5/13/2010.

Filed Date: 05/13/2010.

Accession Number: 20100513–5072.

Comment Date: 5 p.m. Eastern Time on Thursday, June 03, 2010.

Docket Numbers: ER10–1241–000.

Applicants: The Toledo Edison Company.

Description: The Toledo Edison Company submits tariff filing per 35.12: Market-Based Power Sales Tariff to be effective 5/13/2010.

Filed Date: 05/13/2010.

Accession Number: 20100513–5092.

Comment Date: 5 p.m. Eastern Time on Thursday, June 03, 2010.

Docket Numbers: ER10–1242–000.

Applicants: Consolidated Edison Energy, Inc.

Description: Consolidated Edison Energy, Inc. submits tariff filing per 35.12: Baseline filing of Consolidated Edison Solutions, Inc. MBR to be effective 5/13/2010.

Filed Date: 05/13/2010.

Accession Number: 20100513–5128.

Comment Date: 5 p.m. Eastern Time on Thursday, June 03, 2010.

Take notice that the Commission received the following electric reliability filings:

Docket Numbers: RR08–4–005.

Applicants: North American Electric Reliability Corporation.

Description: North American Electric Reliability Corporation submits supplemental information regarding the March 5, 2010 Violation Severity Level Compliance Filing.

Filed Date: 05/05/2010.

Accession Number: 20100505–5112.

Comment Date: 5 p.m. Eastern Time on Thursday, May 20, 2010.

Any person desiring to intervene or to protest in any of the above proceedings must file in accordance with Rules 211 and 214 of the Commission's Rules of Practice and Procedure (18 CFR 385.211 and 385.214) on or before 5 p.m. Eastern time on the specified comment date. It is not necessary to separately intervene again in a subdocket related to a compliance filing if you have previously intervened in the same docket. Protests will be considered by the Commission in determining the appropriate action to be taken, but will not serve to make protestants parties to the proceeding. Anyone filing a motion to intervene or protest must serve a copy of that document on the Applicant. In reference to filings initiating a new proceeding, interventions or protests submitted on or before the comment deadline need not be served on persons other than the Applicant.

The Commission encourages electronic submission of protests and interventions in lieu of paper, using the FERC Online links at *http://www.ferc.gov.* To facilitate electronic service, persons with Internet access who will eFile a document and/or be listed as a contact for an intervenor must create and validate an eRegistration account using the eRegistration link. Select the eFiling link to log on and submit the intervention or protests.

Persons unable to file electronically should submit an original and 14 copies of the intervention or protest to the Federal Energy Regulatory Commission, 888 First St., NE., Washington, DC 20426.

The filings in the above proceedings are accessible in the Commission's eLibrary system by clicking on the appropriate link in the above list. They are also available for review in the Commission's Public Reference Room in Washington, DC. There is an eSubscription link on the Web site that enables subscribers to receive e-mail notification when a document is added to a subscribed docket(s). For assistance with any FERC Online service, please e-mail *FERCOnlineSupport@ferc.gov.* or call (866) 208–3676 (toll free). For TTY, call (202) 502–8659.

Nathaniel J. Davis, Sr.,

Deputy Secretary.

[FR Doc. 2010–12390 Filed 5–21–10; 8:45 am]

BILLING CODE 6717–01–P

DEPARTMENT OF ENERGY

Federal Energy Regulatory Commission

Combined Notice of Filings No. 1

May 11, 2010.

Take notice that the Commission has received the following Natural Gas Pipeline Rate and Refund Report filings:

Docket Numbers: RP10–719–000.

Applicants: Iroquois Gas Transmission System, LP.

Description: Iroquois Gas Transmission System, LP submits Seventh Revised Sheet 6 *et al.* to FERC Gas Tariff, First Revised Volume 1, to be effective 6/7/10.

Filed Date: 05/07/2010.

Accession Number: 20100510–0206.

Comment Date: 5 p.m. Eastern Time on Wednesday, May 19, 2010.

Docket Numbers: RP10–720–000.

Applicants: MoGas Pipeline LLC.

Description: Request of MoGas Pipeline LLC for Limited Waiver of NAESB Standards.

Filed Date: 05/07/2010.

Accession Number: 20100507–5117.

Comment Date: 5 p.m. Eastern Time on Wednesday, May 19, 2010.

Docket Numbers: RP10–721–000.

Applicants: Kinder Morgan Interstate Gas Transmission LLC.

Description: Kinder Morgan Interstate Gas Transmission LLC submits Twelfth Revised Sheet No 4G02 to FERC Gas Tariff, Fourth Revised Volume 1A, to be effective 5/8/10.

Filed Date: 05/07/2010.

Accession Number: 20100510–0207.

Comment Date: 5 p.m. Eastern Time on Wednesday, May 19, 2010.

Docket Numbers: RP10–722–000.

Applicants: Equitrans, LP.

Description: Equitrans, LP submits First Revised Sheet 413 *et al.* to FERC Gas Tariff, Original Volume 1 to be effective 6/6/10.

Filed Date: 05/07/2010.

Accession Number: 20100510–0208.

Comment Date: 5 p.m. Eastern Time on Wednesday, May 19, 2010.

Any person desiring to intervene or to protest in any of the above proceedings must file in accordance with Rules 211 and 214 of the Commission's Rules of Practice and Procedure (18 CFR 385.211 and 385.214) on or before 5 p.m. Eastern time on the specified comment date. It is not necessary to separately intervene again in a subdocket related to a compliance filing if you have previously intervened in the same docket. Protests will be considered by the Commission in determining the appropriate action to be taken, but will not serve to make

protestants parties to the proceeding. Anyone filing a motion to intervene or protest must serve a copy of that document on the Applicant. In reference to filings initiating a new proceeding, interventions or protests submitted on or before the comment deadline need not be served on persons other than the Applicant.

The Commission encourages electronic submission of protests and interventions in lieu of paper, using the FERC Online links at *http://www.ferc.gov*. To facilitate electronic service, persons with Internet access who will eFile a document and/or be listed as a contact for an intervenor must create and validate an eRegistration account using the eRegistration link. Select the eFiling link to log on and submit the intervention or protests.

Persons unable to file electronically should submit an original and 14 copies of the intervention or protest to the Federal Energy Regulatory Commission, 888 First St., NE., Washington, DC 20426.

The filings in the above proceedings are accessible in the Commission's eLibrary system by clicking on the appropriate link in the above list. They are also available for review in the Commission's Public Reference Room in Washington, DC. There is an eSubscription link on the Web site that enables subscribers to receive e-mail notification when a document is added to a subscribed docket(s). For assistance with any FERC Online service, please e-mail *FERCOnlineSupport@ferc.gov* or call (866) 208–3676 (toll free). For TTY, call (202) 502–8659.

Nathaniel J. Davis, Sr.,

Deputy Secretary.

[FR Doc. 2010–12393 Filed 5–21–10; 8:45 am]

BILLING CODE 6717–01–P

DEPARTMENT OF ENERGY

Federal Energy Regulatory Commission

Combined Notice of Filings

May 13, 2010.

Take notice that the Commission has received the following Natural Gas Pipeline Rate and Refund Report filings:

Docket Numbers: RP10–723–000.

Applicants: Cameron Interstate Pipeline, LLC.

Description: Cameron Intestate Pipeline, LLC submits Second revised Sheet 156 (superseding first revised Sheet 156) to be effective 6/15/10.

Filed Date: 05/10/2010.

Accession Number: 20100511–0203.

Comment Date: 5 p.m. Eastern Time on Monday, May 24, 2010.

Docket Numbers: RP10–724–000.

Applicants: Gulf South Pipeline Company, LP.

Description: Gulf South Pipeline Company, LP submits capacity release agreement containing negotiated rate provisions with Texla Energy Management, Inc.

Filed Date: 05/11/2010.

Accession Number: 20100511–0204.

Comment Date: 5 p.m. Eastern Time on Monday, May 24, 2010.

Docket Numbers: RP10–725–000.

Applicants: Pine Needle LNG Company, LLC.

Description: Pine Needle LNG Company, LLC submits tariff filing per 154.203: Pine Needle Order No. 714 Baseline Filing to be effective 5/12/10.

Filed Date: 05/12/2010.

Accession Number: 20100512–5014.

Comment Date: 5 p.m. Eastern Time on Monday, May 24, 2010.

Docket Numbers: RP10–726–000.

Applicants: TransColorado Gas Transmission Company LLC.

Description: TransColorado Gas Transmission Company LLC submits tariff filing per 154.202: Baseline to be effective 5/12/10.

Filed Date: 05/12/2010.

Accession Number: 20100512–5024.

Comment Date: 5 p.m. Eastern Time on Monday, May 24, 2010.

Docket Numbers: RP10–727–000.

Applicants: Gulf South Pipeline Company, LP.

Description: Gulf south Pipeline Company, LP submits Capacity Release Agreement.

Filed Date: 05/12/2010.

Accession Number: 20100512–0218.

Comment Date: 5 p.m. Eastern Time on Monday, May 24, 2010.

Docket Numbers: RP10–728–000.

Applicants: Maritimes & Northeast Pipeline, LLC.

Description: Maritimes & Northeast Pipeline, LLC submits First Revised Sheet No. 95 *et al.* to FERC Gas Tariff, First Revised Volume No. 1, to be effective 6/1/10.

Filed Date: 05/12/2010.

Accession Number: 20100512–0219.

Comment Date: 5 p.m. Eastern Time on Monday, May 24, 2010.

Docket Numbers: RP10–729–000.

Applicants: Portland Natural Gas Transmission System.

Description: Portland Natural Gas Transmission System submits Eighth Revised Sheet No. 100 *et al.* to FERC Gas Tariff, Second Revised Volume 1.

Filed Date: 05/12/2010.

Accession Number: 20100513–0203.

Comment Date: 5 p.m. Eastern Time on Monday, May 24, 2010.

Any person desiring to intervene or to protest in any of the above proceedings must file in accordance with Rules 211 and 214 of the Commission's Rules of Practice and Procedure (18 CFR 385.211 and 385.214) on or before 5 p.m. Eastern time on the specified comment date. It is not necessary to separately intervene again in a subdocket related to a compliance filing if you have previously intervened in the same docket. Protests will be considered by the Commission in determining the appropriate action to be taken, but will not serve to make protestants parties to the proceeding. Anyone filing a motion to intervene or protest must serve a copy of that document on the Applicant. In reference to filings initiating a new proceeding, interventions or protests submitted on or before the comment deadline need not be served on persons other than the Applicant.

The Commission encourages electronic submission of protests and interventions in lieu of paper, using the FERC Online links at *http://www.ferc.gov.* To facilitate electronic service, persons with Internet access who will eFile a document and/or be listed as a contact for an intervenor must create and validate an eRegistration account using the eRegistration link. Select the eFiling link to log on and submit the intervention or protests.

Persons unable to file electronically should submit an original and 14 copies of the intervention or protest to the Federal Energy Regulatory Commission, 888 First St, NE., Washington, DC 20426.

The filings in the above proceedings are accessible in the Commission's eLibrary system by clicking on the appropriate link in the above list. They are also available for review in the Commission's Public Reference Room in Washington, DC. There is an eSubscription link on the Web site that enables subscribers to receive e-mail notification when a document is added to a subscribed docket(s). For assistance with any FERC Online service, please e-mail *FERCOnlineSupport@ferc.gov.* or call (866) 208–3676 (toll free). For TTY, call (202) 502–8659.

Nathaniel J. Davis, Sr.,

Deputy Secretary.

[FR Doc. 2010–12395 Filed 5–21–10; 8:45 am]

BILLING CODE 6717–01–P

DEPARTMENT OF ENERGY

Federal Energy Regulatory Commission

Combined Notice of Filings No. 2

May 17, 2010.

Take notice that the Commission has received the following Natural Gas Pipeline Rate and Refund Report filings:

Docket Numbers: RP10–498–001.
Applicants: Steckman Ridge, LP.
Description: Steckman Ridge, LP submits Sub First Revised Sheet No 222A *et al.* to FERC Gas Tariff, Original Volume No. 1, to be effective 4/1/10.
Filed Date: 05/12/2010.
Accession Number: 20100512–0220.
Comment Date: 5 p.m. Eastern Time on Monday, May 24, 2010.

Docket Numbers: RP10–71–002.
Applicants: High Island Offshore System, LLC.
Description: High Island Offshore System, LLC submits Substitute Ninth Revised Sheet 11 to FERC Gas Tariff, Third Revised Volume 1.
Filed Date: 05/12/2010.
Accession Number: 20100512–0221.
Comment Date: 5 p.m. Eastern Time on Monday, May 24, 2010.

Docket Numbers: RP10–563–001.
Applicants: Alliance Pipeline LP.
Description: Alliance Pipeline LP submits tariff filing per 154.203: Compliance Filing RP10–563 to be effective 4/1/2010.
Filed Date: 05/14/2010.
Accession Number: 20100514–5094.
Comment Date: 5 p.m. Eastern Time on Wednesday, May 26, 2010.

Docket Numbers: RP10–690–001.
Applicants: Guardian Pipeline, LLC.
Description: Guardian Pipeline, LLC submits withdraw in its entirety the 5/7/10.
Filed Date: 05/14/2010.
Accession Number: 20100514–0026.
Comment Date: 5 p.m. Eastern Time on Wednesday, May 26, 2010.

Docket Numbers: CP07–414–001.
Applicants: Golden Triangle Storage, Inc.
Description: Golden Triangle Storage, Inc., submits its application to amend its certificate of public convenience and necessity.
Filed Date: 04/30/2010.
Accession Number: 20100503–0284.
Comment Date: 5 p.m. Eastern Time on Monday, May 24, 2010.

Any person desiring to protest this filing must file in accordance with Rule 211 of the Commission's Rules of Practice and Procedure (18 CFR 385.211). Protests to this filing will be considered by the Commission in determining the appropriate action to be taken, but will not serve to make protestants parties to the proceeding. Such protests must be filed on or before 5 p.m. Eastern time on the specified comment date. Anyone filing a protest must serve a copy of that document on all the parties to the proceeding.

The Commission encourages electronic submission of protests in lieu of paper using the "eFiling" link at *http://www.ferc.gov.* Persons unable to file electronically should submit an original and 14 copies of the protest to the Federal Energy Regulatory Commission, 888 First Street, NE., Washington, DC 20426.

This filing is accessible on-line at *http://www.ferc.gov,* using the "eLibrary" link and is available for review in the Commission's Public Reference Room in Washington, DC. There is an "eSubscription" link on the Web site that enables subscribers to receive e-mail notification when a document is added to a subscribed docket(s). For assistance with any FERC Online service, please e-mail *FERCOnlineSupport@ferc.gov,* or call (866) 208–3676 (toll free). For TTY, call (202) 502–8659.

Nathaniel J. Davis, Sr.,
Deputy Secretary.

[FR Doc. 2010–12398 Filed 5–21–10; 8:45 am]

BILLING CODE 6717–01–P

DEPARTMENT OF ENERGY

Federal Energy Regulatory Commission

Combined Notice of Filings No. 1

May 17, 2010.

Take notice that the Commission has received the following Natural Gas Pipeline Rate and Refund Report filings:

Docket Numbers: RP10–730–000.
Applicants: Questar Pipeline Company.
Description: Questar Pipeline Company submits Forty-Seventh Revised Sheet 7 *et al.* to FERC Gas Tariff, First Revised Volume 1, to be effective 6/14/10.
Filed Date: 05/13/2010.
Accession Number: 20100513–0223.
Comment Date: 5 p.m. Eastern Time on Tuesday, May 25, 2010.

Docket Numbers: RP10–731–000.
Applicants: Trunkline Gas Company, LLC.
Description: Trunkline Gas Company, LLC submits Seventh Revised Sheet 2 *et al.* to FERC Gas Tariff, Third Revised Volume 1, to be effective 6/13/10.
Filed Date: 05/13/2010.
Accession Number: 20100513–0222.
Comment Date: 5 p.m. Eastern Time on Tuesday, May 25, 2010.

Docket Numbers: RP10–732–000.
Applicants: Energy West Development, Inc.
Description: Energy West Development, Inc. submits Second Revised Sheet 1 *et al.* to its FERC Gas Tariff, Volume 1, to be effective 6/11/10.
Filed Date: 05/12/2010.
Accession Number: 20100513–0224.
Comment Date: 5 p.m. Eastern Time on Monday, May 24, 2010.

Docket Numbers: RP10–733–000.
Applicants: Kinder Morgan Interstate Gas Trans. LLC.
Description: Petition of KMIGT for a Limited Waiver of Tariff Provision.
Filed Date: 05/13/2010.
Accession Number: 20100513–5090.
Comment Date: 5 p.m. Eastern Time on Tuesday, May 25, 2010.

Docket Numbers: RP10–734–000.
Applicants: Transcontinental Gas Pipe Line Company, LLC.
Description: Transcontinental Gas Pipe Line Company, LLC submits 3/10/10 letter agreement between Transco and its Rate Schedules SS–1 Open Access and SS–1 Section.
Filed Date: 05/13/2010.
Accession Number: 20100513–0231.
Comment Date: 5 p.m. Eastern Time on Tuesday, May 25, 2010.

Docket Numbers: RP10–735–000.
Applicants: Gulf South Pipeline Company, LP.
Description: Gulf South Pipeline Company, LP submits Capacity Release Agreement.
Filed Date: 05/13/2010.
Accession Number: 20100513–0230.
Comment Date: 5 p.m. Eastern Time on Tuesday, May 25, 2010.

Docket Numbers: RP10–736–000.
Applicants: Gulf South Pipeline Company, LP.
Description: Gulf South Pipeline Company, LP submits Capacity Release Agreement.
Filed Date: 05/13/2010.
Accession Number: 20100513–0229.
Comment Date: 5 p.m. Eastern Time on Tuesday, May 25, 2010.

Docket Numbers: RP10–737–000.
Applicants: TransColorado Gas Transmission Company LLC.
Description: TransColorado Gas Transmission Company LLC submits FERC Gas Tariff, Third Revised Volume 1 pursuant to Part 154.204 under RP10–737, to be effective 6/14/10.
Filed Date: 05/14/2010.
Accession Number: 20100514–5056.
Comment Date: 5 p.m. Eastern Time on Wednesday, May 26, 2010.

Docket Numbers: RP10–738–000.

Applicants: El Paso Natural Gas Company.

Description: El Paso Natural Gas Company submits tariff filing per 154.203: Settlement Implementation to be effective 6/1/2010.

Filed Date: 05/14/2010.

Accession Number: 20100514–5063.

Comment Date: 5 p.m. Eastern Time on Wednesday, May 26, 2010.

Docket Numbers: RP10–739–000.

Applicants: Hardy Storage Company, LLC.

Description: Hardy Storage Company's submits annual report regarding the crediting of penalty revenues.

Filed Date: 05/14/2010.

Accession Number: 20100514–0218.

Comment Date: 5 p.m. Eastern Time on Wednesday, May 26, 2010.

Docket Numbers: RP10–740–000.

Applicants: Gulf South Pipeline Company, LP.

Description: Gulf South Pipeline Company, LP submits capacity release agreement containing negotiated rate provisions by Gulf South and Texla Energy Management, Inc.

Filed Date: 05/14/2010.

Accession Number: 20100514–0207.

Comment Date: 5 p.m. Eastern Time on Wednesday, May 26, 2010.

Docket Numbers: RP10–741–000.

Applicants: Dominion Transmission, Inc.

Description: Dominion Transmission, Inc. submits revised tariff sheets shown in Exhibit A for inclusion in its FERC Gas Tariff, Second Revised Volume 1A.

Filed Date: 05/14/2010.

Accession Number: 20100514–0208.

Comment Date: 5 p.m. Eastern Time on Wednesday, May 26, 2010.

Docket Numbers: RP10–742–000.

Applicants: Alliance Pipeline L.P.

Description: Alliance Pipeline L.P. submits tariff filing per 154.204: Correct Sheet Reference in Baseline Filing to be effective 6/15/2010.

Filed Date: 05/14/2010.

Accession Number: 20100514–5136.

Comment Date: 5 p.m. Eastern Time on Wednesday, May 26, 2010.

Docket Numbers: RP10–743–000.

Applicants: Calpine Energy Services, L.P., Conectiv Energy.

Description: Calpine Energy Services, L.P., *et al.* request a temporary waiver of the capacity release requirements in Section 284.8 of the Commission's regulations.

Filed Date: 05/14/2010.

Accession Number: 20100514–5160.

Comment Date: 5 p.m. Eastern Time on Wednesday, May 26, 2010.

Docket Numbers: RP10–744–000.

Applicants: Algonquin Gas Transmission, LLC.

Description: Algonquin Gas Transmission, LLC submits tariff filing per 154.203: AGT Baseline Filing to be effective 5/17/2010.

Filed Date: 05/17/2010.

Accession Number: 20100517–5013.

Comment Date: 5 p.m. Eastern Time on Tuesday, June 01, 2010.

Any person desiring to intervene or to protest in any of the above proceedings must file in accordance with Rules 211 and 214 of the Commission's Rules of Practice and Procedure (18 CFR 385.211 and 385.214) on or before 5 p.m. Eastern time on the specified comment date. It is not necessary to separately intervene again in a subdocket related to a compliance filing if you have previously intervened in the same docket. Protests will be considered by the Commission in determining the appropriate action to be taken, but will not serve to make protestants parties to the proceeding. Anyone filing a motion to intervene or protest must serve a copy of that document on the Applicant. In reference to filings initiating a new proceeding, interventions or protests submitted on or before the comment deadline need not be served on persons other than the Applicant.

The Commission encourages electronic submission of protests and interventions in lieu of paper, using the FERC Online links at *http://www.ferc.gov.* To facilitate electronic service, persons with Internet access who will eFile a document and/or be listed as a contact for an intervenor must create and validate an eRegistration account using the eRegistration link. Select the eFiling link to log on and submit the intervention or protests.

Persons unable to file electronically should submit an original and 14 copies of the intervention or protest to the Federal Energy Regulatory Commission, 888 First St., NE., Washington, DC 20426.

The filings in the above proceedings are accessible in the Commission's eLibrary system by clicking on the appropriate link in the above list. They are also available for review in the Commission's Public Reference Room in Washington, DC. There is an eSubscription link on the Web site that enables subscribers to receive e-mail notification when a document is added to a subscribed docket(s). For assistance with any FERC Online service, please e-mail *FERCOnlineSupport@ferc.gov,* or call (866) 208–3676 (toll free). For TTY, call (202) 502–8659.

Nathaniel J. Davis, Sr.,

Deputy Secretary.

[FR Doc. 2010–12396 Filed 5–21–10; 8:45 am]

BILLING CODE 6717–01–P

DEPARTMENT OF ENERGY

Federal Energy Regulatory Commission

Combined Notice of Filings No. 2

May 11, 2010.

Take notice that the Commission has received the following Natural Gas Pipeline Rate and Refund Report filings:

Docket Numbers: RP10–446–002.

Applicants: Guardian Pipeline Company, LLC.

Description: Guardian Pipeline Company, LLC submits Second Revised Sheet 5.02 *et al.* to FERC Gas Tariff, Original Volume 1, to be effective 6/1/10.

Filed Date: 05/07/2010.

Accession Number: 20100510–0204.

Comment Date: 5 p.m. Eastern Time on Wednesday, May 19, 2010.

Docket Numbers: RP10–666–001.

Applicants: Gulf Crossing Pipeline Company LLC.

Description: Gulf Crossing Pipeline Company LLC submits tariff filing per 154.203: Submission of Corrected Tariff Records to be effective 5/7/2010.

Filed Date: 05/07/2010.

Accession Number: 20100507–5070.

Comment Date: 5 p.m. Eastern Time on Wednesday, May 19, 2010.

Docket Numbers: RP10–690–001.

Applicants: Guardian Pipeline, LLC.

Description: Guardian Pipeline, LLC submits Fifth Revised Sheet 8 *et al.* to FERC Gas Tariff, Original Volume 1, to be effective 6/1/10.

Filed Date: 05/07/2010.

Accession Number: 20100510–0203.

Comment Date: 5 p.m. Eastern Time on Wednesday, May 19, 2010.

Docket Numbers: RP10–492–001; RP03–162–015.

Applicants: Trailblazer Pipeline Company LLC.

Description: Trailblazer Pipeline Company LLC submits the Third Revised Sheet 5 *et al.* to FERC Gas Tariff, Fourth Revised Volume 1.

Filed Date: 05/10/2010.

Accession Number: 20100510–0211.

Comment Date: 5 p.m. Eastern Time on Monday, May 24, 2010.

Any person desiring to protest this filing must file in accordance with Rule 211 of the Commission's Rules of Practice and Procedure (18 CFR

385.211). Protests to this filing will be considered by the Commission in determining the appropriate action to be taken, but will not serve to make protestants parties to the proceeding. Such protests must be filed on or before 5 p.m. Eastern time on the specified comment date. Anyone filing a protest must serve a copy of that document on all the parties to the proceeding.

The Commission encourages electronic submission of protests in lieu of paper using the "eFiling" link at *http://www.ferc.gov*. Persons unable to file electronically should submit an original and 14 copies of the protest to the Federal Energy Regulatory Commission, 888 First Street, NE., Washington, DC 20426.

This filing is accessible on-line at *http://www.ferc.gov,* using the "eLibrary" link and is available for review in the Commission's Public Reference Room in Washington, DC. There is an "eSubscription" link on the Web site that enables subscribers to receive e-mail notification when a document is added to a subscribed docket(s). For assistance with any FERC Online service, please e-mail *FERCOnlineSupport@ferc.gov,* or call (866) 208–3676 (toll free). For TTY, call (202) 502–8659.

Nathaniel J. Davis, Sr.,

Deputy Secretary.

[FR Doc. 2010–12394 Filed 5–21–10; 8:45 am]

BILLING CODE 6717–01–P

DEPARTMENT OF ENERGY

Federal Energy Regulatory Commission

Combined Notice of Filings #1

May 12, 2010.

Take notice that the Commission received the following electric corporate filings:

Docket Numbers: EC10–68–000.
Applicants: Allegheny Energy Inc., FirstEnergy Corp.
Description: Application of FirstEnergy Corp., *et al.* under Section 203 of Federal Power Act.
Filed Date: 05/11/2010.
Accession Number: 20100511–5100.
Comment Date: 5 p.m. Eastern Time on Monday, July 12, 2010.

Take notice that the Commission received the following electric rate filings:

Docket Numbers: ER03–908–003.
Applicants: Fulcrum Power Marketing LLC.
Description: Supplement to Filing of Fulcrum Power Marketing LLC.
Filed Date: 05/11/2010.
Accession Number: 20100511–5118.
Comment Date: 5 p.m. Eastern Time on Tuesday, June 01, 2010.

Docket Numbers: ER05–1232–024; ER07–1358–014.
Applicants: J.P. Morgan Ventures Energy Corporation, BE Louisiana LLC.
Description: J.P. Morgan Ventures Energy Corporation and BE Louisiana LLC's Supplement to Updated Market Power Analysis and Order No. 697 Compliance Filing.
Filed Date: 05/05/2010.
Accession Number: 20100505–5111.
Comment Date: 5 p.m. Eastern Time on Wednesday, May 26, 2010.

Docket Numbers: ER10–1228–000.
Applicants: Allegheny Energy Supply Company, LLC.
Description: Allegheny Energy Supply Company, LLC submits request for authorization to make wholesale power sales to its affiliate *etc.*
Filed Date: 05/11/2010.
Accession Number: 20100512–0202.
Comment Date: 5 p.m. Eastern Time on Tuesday, June 01, 2010.

Docket Numbers: ER10–1229–000.
Applicants: California Independent System Operator Corporation.
Description: California Independent System Operator Corporation submits amendments to FERC Electric, Fourth Replacement Volume Nos. 1 & 2.
Filed Date: 05/07/2010.
Accession Number: 20100512–0210.
Comment Date: 5 p.m. Eastern Time on Friday, May 28, 2010.

Take notice that the Commission received the following electric securities filings:

Docket Numbers: ES10–35–000.
Applicants: American Transmission Company LLC, ATC Management Inc.
Description: Supplemental Information and Request for Shortened Comment Period of American Transmission Company LLC and ATC Management Inc.
Filed Date: 05/05/2010.
Accession Number: 20100505–5023.
Comment Date: 5 p.m. Eastern Time on Monday, May 17, 2010.

Take notice that the Commission received the following electric reliability filings:

Docket Numbers: RR10–9–001.
Applicants: North American Electric Reliability Corporation.
Description: Supplemental Filing to Petition of North American Electric Reliability Corporation for Approval of Amended 2010 Business Plan and Budget of WECC and Amendment to Exhibit E *etc.*
Filed Date: 05/11/2010.
Accession Number: 20100511–5117.
Comment Date: 5 p.m. Eastern Time on Wednesday, May 26, 2010.

Any person desiring to intervene or to protest in any of the above proceedings must file in accordance with Rules 211 and 214 of the Commission's Rules of Practice and Procedure (18 CFR 385.211 and 385.214) on or before 5 p.m. Eastern time on the specified comment date. It is not necessary to separately intervene again in a subdocket related to a compliance filing if you have previously intervened in the same docket. Protests will be considered by the Commission in determining the appropriate action to be taken, but will not serve to make protestants parties to the proceeding. Anyone filing a motion to intervene or protest must serve a copy of that document on the Applicant. In reference to filings initiating a new proceeding, interventions or protests submitted on or before the comment deadline need not be served on persons other than the Applicant.

The Commission encourages electronic submission of protests and interventions in lieu of paper, using the FERC Online links at *http://www.ferc.gov.* To facilitate electronic service, persons with Internet access who will eFile a document and/or be listed as a contact for an intervenor must create and validate an eRegistration account using the eRegistration link. Select the eFiling link to log on and submit the intervention or protests.

Persons unable to file electronically should submit an original and 14 copies of the intervention or protest to the Federal Energy Regulatory Commission, 888 First St., NE., Washington, DC 20426.

The filings in the above proceedings are accessible in the Commission's eLibrary system by clicking on the appropriate link in the above list. They are also available for review in the Commission's Public Reference Room in Washington, DC. There is an eSubscription link on the Web site that enables subscribers to receive e-mail notification when a document is added to a subscribed docket(s). For assistance with any FERC Online service, please e-mail *FERCOnlineSupport@ferc.gov,* or call (866) 208–3676 (toll free). For TTY, call (202) 502–8659.

Nathaniel J. Davis, Sr.,

Deputy Secretary.

[FR Doc. 2010–12392 Filed 5–21–10; 8:45 am]

BILLING CODE 6717–01–P

DEPARTMENT OF ENERGY

Federal Energy Regulatory Commission

Combined Notice of Filings No. 1

May 7, 2010.

Take notice that the Commission has received the following Natural Gas Pipeline Rate and Refund Report filings:

Docket Numbers: RP10–684–000.
Applicants: Transcontinental Gas Pipe Line Company.
Description: Transcontinental Gas Pipe Line Company, LLC submits Third Revised Sheet No. 573 *et al.* to its FERC Gas Tariff, Fourth Revised Volume No. 1, to be effective 5/31/10.
Filed Date: 04/30/2010.
Accession Number: 20100430–0257.
Comment Date: 5 p.m. Eastern Time on Wednesday, May 12, 2010.

Docket Numbers: RP10–713–000.
Applicants: Enbridge Offshore Pipelines (UTOS) LLC.
Description: Enbridge Offshore Pipelines (UTOS) LLC submits tariff filing per 154.203: Baseline Filing to be effective 6/5/2010.
Filed Date: 05/05/2010.
Accession Number: 20100505–5042.
Comment Date: 5 p.m. Eastern Time on Monday, May 17, 2010.

Docket Numbers: RP10–714–000.
Applicants: Natural Gas Pipeline Company of America.
Description: Natural Gas Pipeline Company of America LLC submits an amendment to an existing Transportation Rate Schedule FTS Agreement with a negotiated rate exhibit Natural and CenterPoint Energy Services, Inc.
Filed Date: 05/05/2010.
Accession Number: 20100505–0212.
Comment Date: 5 p.m. Eastern Time on Monday, May 17, 2010.

Docket Numbers: RP10–715–000.
Applicants: Gulf South Pipeline Company, LP.
Description: Gulf South Pipeline Company, LP submits a capacity release agreement containing negotiated rate provision.
Filed Date: 05/05/2010.
Accession Number: 20100506–0210.
Comment Date: 5 p.m. Eastern Time on Monday, May 17, 2010.

Docket Numbers: RP10–716–000.
Applicants: Gulf South Pipeline Company, LP.
Description: Gulf South Pipeline Company, LP submits a capacity release agreement containing negotiated rate provisions.
Filed Date: 05/05/2010.
Accession Number: 20100506–0209.
Comment Date: 5 p.m. Eastern Time on Monday, May 17, 2010.

Docket Numbers: RP10–717–000.
Applicants: Gulf South Pipeline Company, LP.
Description: Gulf South Pipeline Company, LP submits the Negotiated Rate Capacity Release Agreement with Texla Energy Management, Inc.
Filed Date: 05/06/2010.
Accession Number: 20100506–0234.
Comment Date: 5 p.m. Eastern Time on Tuesday, May 18, 2010.

Docket Numbers: RP10–718–000.
Applicants: Texas Gas Transmission, LLC.
Description: Texas Gas Transmission, LLC submits an amendment to a negotiated rate letter agreement with Northern Illinois Gas Co.
Filed Date: 05/06/2010.
Accession Number: 20100506–0235.
Comment Date: 5 p.m. Eastern Time on Tuesday, May 18, 2010.

Any person desiring to intervene or to protest in any of the above proceedings must file in accordance with Rules 211 and 214 of the Commission's Rules of Practice and Procedure (18 CFR 385.211 and 385.214) on or before 5 p.m. Eastern time on the specified comment date. It is not necessary to separately intervene again in a subdocket related to a compliance filing if you have previously intervened in the same docket. Protests will be considered by the Commission in determining the appropriate action to be taken, but will not serve to make protestants parties to the proceeding. Anyone filing a motion to intervene or protest must serve a copy of that document on the Applicant. In reference to filings initiating a new proceeding, interventions or protests submitted on or before the comment deadline need not be served on persons other than the Applicant.

The Commission encourages electronic submission of protests and interventions in lieu of paper, using the FERC Online links at *http://www.ferc.gov.* To facilitate electronic service, persons with Internet access who will eFile a document and/or be listed as a contact for an intervenor must create and validate an eRegistration account using the eRegistration link. Select the eFiling link to log on and submit the intervention or protests.

Persons unable to file electronically should submit an original and 14 copies of the intervention or protest to the Federal Energy Regulatory Commission, 888 First St., NE., Washington, DC 20426.

The filings in the above proceedings are accessible in the Commission's eLibrary system by clicking on the appropriate link in the above list. They are also available for review in the Commission's Public Reference Room in Washington, DC. There is an eSubscription link on the Web site that enables subscribers to receive e-mail notification when a document is added to a subscribed docket(s). For assistance with any FERC Online service, please e-mail *FERCOnlineSupport@ferc.gov* or call (866) 208–3676 (toll free). For TTY, call (202) 502–8659.

Nathaniel J. Davis, Sr.,
Deputy Secretary.

[FR Doc. 2010–12391 Filed 5–21–10; 8:45 am]

BILLING CODE 6717–01–P

DEPARTMENT OF ENERGY

Office of Energy Efficiency and Renewable Energy

Energy Efficiency and Conservation Block Grant Program: Funding Opportunity Announcement (DE–FOA–0000013)

AGENCY: Office of Energy Efficiency and Renewable Energy, Department of Energy.

ACTION: Notice of application deadline guideline.

SUMMARY: This notice advises the public that applications under the Funding Opportunity Announcement (DE–FOA–0000013) for the formula grants of the Energy Efficiency and Conservation Block Grant (EECBG) Program of the American Recovery and Reinvestment Act of 2009 will not be accepted after June 25, 2010.

DATES: Eligible entities that have not submitted an application for a formula allocation under the program to date may submit an application to DOE by 11:59 p.m., ET, June 25, 2010.

FOR FURTHER INFORMATION CONTACT: Johanna Zetterberg, U.S. Department of Energy, Office of Energy Efficiency and Renewable Energy, Weatherization and Intergovernmental Program, EE–2K, 1000 Independence Avenue, SW., Washington, DC 20585–0121, (202) 586–8778 or e-mail: *Johanna.Zetterberg@ee.doe.gov.*

SUPPLEMENTARY INFORMATION:

I. Background
II. Extension of the FOA Application Deadlines
III. Application Information for Eligible Entities

I. Background

The Energy Efficiency and Conservation Block Grant (EECBG)

Program was established by the Energy Independence and Security Act of 2007 (Pub. L. 110–140; (EISA)). The EECBG Program provides Federal grants to States, units of local government, Indian Tribes, and consortia of these entities to reduce energy use and fossil fuel emissions, and for energy efficiency programs and projects. (42 U.S.C. 17152) Generally, the EECBG Program provides for formula grants to States, cities and counties of specified populations, and specified Indian Tribes (collectively referred to as "eligible entities"). (42 U.S.C. 17153(a)) Entities eligible for a formula grant and their funding allocations are published on DOE's Web site at *http://www.eecbg.energy.gov/*. The EECBG Program is administered by the Office of Energy Efficiency and Renewable Energy (EERE) of the U.S. Department of Energy (DOE).

The American Recovery and Reinvestment Act of 2009 (Pub. L. 111–5; ARRA) appropriated $3.2 billion to DOE to implement the program. DOE initially provided $2.741 billion for formula grants from the ARRA appropriations. The distribution was determined using the most recent and accurate population data available, as follows:

- 68 percent to eligible units of local government;
- 28 percent to States through formula grants;
- Two percent to Indian Tribes through formula grants; and
- Two percent for competitive grants to ineligible cities, counties, and Indian Tribes.

(42 U.S.C. 17153(a); *see* also 74 FR 17146 (April 15, 2009) available at (*http://www1.eere.energy.gov/wip/pdfs/eecbg_federal_register_notice_04_15_09.pdf*).

In June 2009, DOE established an appeals process regarding eligibility determinations. (74 FR 30061; June 24, 2009). The deadline for filing appeals regarding eligibility determinations for direct formula grants for units of local government under the EECBG Program was July 24, 2009. Appeals were reviewed and adjudicated by DOE's Office of Hearings and Appeals (OHA), and decisions were issued from July 23, 2009, through September 15, 2009. Thirty one appeals were granted, six appeals were denied, and one was dismissed. All case decisions are available at *http://www.oha.doe.gov/EECBG/report.asp*. For detailed information regarding issues that could be appealed, the process for filing an appeal, and the procedure applicable to adjudicate such appeals, see the notice available at *http://www.oha.doe.gov/EECBG/EECBG.asp.*

The total number of eligible entities under the EECBG Program, including entities that successfully appealed, is 2,359; 56 States (including the District of Columbia, Puerto Rico, Guam, the Mariana Islands, the U.S. Virgin Islands, and American Samoa), 1,258 cities and city-equivalents, 471 counties and county-equivalents, and 574 Indian Tribes. Under ARRA, all EECBG Program funds from ARRA must be obligated by DOE by September 30, 2010.

II. Extension of the FOA Application Deadlines

DOE issued DE–FOA–0000013 on March 26, 2009, establishing an application deadline for States of May 26, 2009, and for units of local government and Indian Tribes of June 25, 2009. The FOA specifically stated that applications received after the deadline would not be reviewed or considered for award. However, DOE issued amendment 003 on May 11, 2009, establishing an application deadline for all applicants of June 25, 2009. DOE issued amendment 005 on June 25, 2009, establishing a deadline of August 10, 2009. This notice is to inform eligible entities that an amended deadline for applications for formula funding under the EECBG Program of June 25, 2010 has been established. Applications not received by this date will not be reviewed or considered for award.

If there are any funds remaining upon closure of DE–FOA–0000013 for formula grants to eligible entities, DOE will reallocate the remaining funds consistent with the EECBG statutory formula.

III. Application Information for Eligible Entities

Eligible entities that have not submitted an application for a formula allocation under the program to date may submit an application to DOE by 11:59 p.m., ET, June 25, 2010. Applicants must follow all registration and submission requirements and instructions in DE–FOA–0000013.

DOE encourages eligible entities that do not intend to apply for an allocation to submit a Letter of Intent. Letters of Intent are not required. However, if you are an eligible entity in accordance with section 541, Subtitle E of EISA of 2007 and do not intend to apply for these funds, please submit an e-mail to *EECBG@netl.doe.gov* with the subject line: "DE–FOA–0000013—No intention of applying for funding." In the body of the e-mail message, state that "the following entity: [State/City, State/County, State/Indian Tribe/State] will not be applying for their formula-based funding available under the Energy Efficiency and Conservation Block Grant Program." Please include a PDF of a letter on the entity's letterhead also stating the intention not to apply for funding with the signature, name and contact information of the authorized individual responsible for this decision.

IV. Approval of the Office of the Secretary

The Secretary of Energy has approved publication of this notice.

Issued in Washington, DC, on May 18, 2010.

Cathy Zoi,

Assistant Secretary, Energy Efficiency and Renewable Energy.

[FR Doc. 2010–12405 Filed 5–21–10; 8:45 am]

BILLING CODE 6450–01–P

ENVIRONMENTAL PROTECTION AGENCY

[EPA–HQ–OECA–2009–0397; FRL–9154–4; EPA ICR Number 1869.06; OMB Control Number 2060–0434]

Agency Information Collection Activities; Submission to OMB for Review and Approval; Comment Request; NESHAP for the Manufacture of Amino/Phenolic Resins

AGENCY: Environmental Protection Agency (EPA).

ACTION: Notice.

SUMMARY: In compliance with the Paperwork Reduction Act (44 U.S.C. 3501 *et seq.*), this document announces that an Information Collection Request (ICR) has been forwarded to the Office of Management and Budget (OMB) for review and approval. This is a request to renew an existing approved collection. The ICR which is abstracted below describes the nature of the collection and the estimated burden and cost.

DATES: Additional comments may be submitted on or before June 23, 2010.

ADDRESSES: Submit your comments, referencing docket ID number EPA–HQ–OECA–2009–0397, to (1) EPA online using *http://www.regulations.gov* (our preferred method), or by e-mail to *docket.oeca@epa.gov,* or by mail to: EPA Docket Center (EPA/DC), Environmental Protection Agency, Enforcement and Compliance Docket and Information Center, mail code 28221T, 1200 Pennsylvania Avenue, NW., Washington, DC 20460, and (2) OMB at: Office of Information and Regulatory

Affairs, Office of Management and Budget (OMB), Attention: Desk Officer for EPA, 725 17th Street, NW., Washington, DC 20503.

FOR FURTHER INFORMATION CONTACT: Robert C. Marshall, Jr., Office of Compliance, Mail Code: 2223A, Environmental Protection Agency, 1200 Pennsylvania Avenue, NW., Washington, DC 20460; telephone number: (202) 564–7021; fax mail: (202) 564–0050; e-mail address: *marshall.robert@epa.gov.*

SUPPLEMENTARY INFORMATION: EPA has submitted the following ICR to OMB for review and approval according to the procedures prescribed in 5 CFR 1320.12. On July 8, 2009 (74 FR 32581), EPA sought comments on this ICR pursuant to 5 CFR 1320.8(d). EPA received no comments. Any additional comments on this ICR should be submitted to EPA and OMB within 30 days of this notice.

EPA has established a public docket for this ICR under docket ID number EPA–HQ–OECA–2009–0397, which is available for public viewing online at *http://www.regulations.gov*, in person viewing at the Enforcement and Compliance Docket in the EPA Docket Center (EPA/DC), EPA West, Room 3334, 1301 Constitution Avenue, NW., Washington, DC. The EPA Docket Center Public Reading Room is open from 8:30 a.m. to 4:30 p.m., Monday through Friday, excluding legal holidays. The telephone number for the Reading Room is (202) 566–1744, and the telephone number for the Enforcement and Compliance Docket is (202) 566–1752.

Use EPA's electronic docket and comment system at *http://www.regulations.gov*, to submit or view public comments, access the index listing of the contents of the docket, and to access those documents in the docket that are available electronically. Once in the system, select "docket search," then key in the docket ID number identified above. Please note that EPA's policy is that public comments, whether submitted electronically or in paper, will be made available for public viewing at *http://www.regulations.gov*, as EPA receives them and without change, unless the comment contains copyrighted material, Confidential Business Information (CBI), or other information whose public disclosure is restricted by statute. For further information about the electronic docket, go to *http://www.regulations.gov.*

Title: NESHAP for the Manufacture of Amino/Phenolic Resins (Renewal).

ICR Numbers: EPA ICR Number 1869.06, OMB Control Number 2060–0434.

ICR Status: This ICR is scheduled to expire on July 31, 2010. Under OMB regulations, the Agency may continue to conduct or sponsor the collection of information while this submission is pending at OMB. An Agency may not conduct or sponsor, and a person is not required to respond to, a collection of information unless it displays a currently valid OMB control number. The OMB control numbers for EPA's regulations in title 40 of the CFR, after appearing in the **Federal Register** when approved, are listed in 40 CFR part 9, and displayed either by publication in the **Federal Register** or by other appropriate means, such as on the related collection instrument or form, if applicable. The display of OMB control numbers in certain EPA regulations is consolidated in 40 CFR part 9.

Abstract: The National Emission Standards for Hazardous Air Pollutants (NESHAP) for the Manufacture of Amino/Phenolic Resins were proposed on December 14, 1998, and promulgated on January 20, 2000.

The affected entities are subject to the General Provisions of the NESHAP at 40 CFR part 63, subpart A, and any changes, or additions to the Provisions specified at 40 CFR part 63, subpart KKKK. Owners or operators of the affected facilities must submit a one-time-only report of any physical or operational changes, initial performance tests, and periodic reports and results. Owners or operators are also required to maintain records of the occurrence and duration of any startup, shutdown, or malfunction in the operation of an affected facility, or any period during which the monitoring system is inoperative. Reports, at a minimum, are required semiannually.

Burden Statement: The annual public reporting and recordkeeping burden for this collection of information is estimated to average 293 hours per response. Burden means the total time, effort, or financial resources expended by persons to generate, maintain, retain, or disclose or provide information to or for a Federal agency. This includes the time needed to review instructions; develop, acquire, install, and utilize technology and systems for the purposes of collecting, validating, and verifying information, processing and maintaining information, and disclosing and providing information; adjust the existing ways to comply with any previously applicable instructions and requirements which have subsequently changed; train personnel to be able to respond to a collection of information; search data sources; complete and review the collection of information; and transmit or otherwise disclose the information.

Respondents/Affected Entities: Amino/phenolic resins manufacturing facilities.

Estimated Number of Respondents: 40.

Frequency of Response: Initially, occassionally, quarterly, semiannually, and annually.

Estimated Total Annual Hour Burden: 24,044.

Estimated Total Annual Cost: $2,290,320, which includes $2,274,320 in labor costs, no capital/startup costs, and $16,000 in operation and maintenance (O&M) costs.

Changes in the Estimates: There is no change in the respondent labor hours in this ICR compared to the previous ICR. This is due to two considerations: (1) The regulations have not changed over the past three years, are not anticipated to change over the next three years; and (2) the growth rate for the respondents is very low, negative or non-existent. Therefore, the labor hours in the previous ICR reflect the current burden to the respondents and are reiterated in this ICR.

There is an increase in both respondent and Agency costs resulting from labor rate increases from 2003 to 2009.

Dated: May 18, 2010.

John Moses,

Director, Collection Strategies Division.

[FR Doc. 2010–12379 Filed 5–21–10; 8:45 am]

BILLING CODE 6560–50–P

ENVIRONMENTAL PROTECTION AGENCY

[EPA–HQ–OAR–2003–0041; FRL–9154–5; EPA ICR No. 0877.10; OMB Control No. 2060–0015]

Agency Information Collection Activities; Submission to OMB for Review and Approval; Comment Request; RadNet (Renewal)

AGENCY: Environmental Protection Agency (EPA).

ACTION: Notice.

SUMMARY: In compliance with the Paperwork Reduction Act (PRA) (44 U.S.C. 3501 *et seq.*), this document announces that an Information Collection Request (ICR) has been forwarded to the Office of Management and Budget (OMB) for review and approval. This is a request to renew an existing approved collection. The ICR, which is abstracted below, describes the nature of the information collection and its estimated burden and cost.

DATES: Additional comments may be submitted on or before June 23, 2010.

ADDRESSES: Submit your comments, referencing Docket ID No. EPA–HQ–OAR–2003–0041 to (1) EPA online using *http://www.regulations.gov* (our preferred method) or by mail to: EPA Docket Center, Environmental Protection Agency, Air and Radiation Docket, Mail Code 28221T, 1200 Pennsylvania Ave., NW., Washington, DC 20460, and (2) OMB by mail to: Office of Information and Regulatory Affairs, Office of Management and Budget (OMB), Attention: Desk Officer for EPA, 725 17th Street, NW., Washington, DC 20503.

FOR FURTHER INFORMATION CONTACT: Charles M. Petko, Office of Radiation and Indoor Air (ORIA), National Air and Radiation Environmental Laboratory (NAREL), 540 South Morris Avenue, Montgomery, Alabama 36115–2601. Tel: 334–270–3411; fax number: 334–270–3454; e-mail address: *petko.charles@epa.gov.*

SUPPLEMENTARY INFORMATION: EPA has submitted the following ICR to OMB for review and approval according to the procedures prescribed in 5 CFR 1320.12. On November 6, 2009 (74 FR 5746), EPA sought comments on this ICR pursuant to 5 CFR 1320.8(d). EPA received no comments. Any additional comments on this ICR should be submitted to EPA and OMB within 30 days of this notice.

EPA has established a public docket for this ICR under Docket ID No. EPA–HQ–OAR–2003–0041, which is available for online viewing at *http://www.regulations.gov,* or in person viewing at the Office of Air and Radiation Docket in the EPA Docket Center (EPA/DC), EPA West, Room 3334, 1301 Constitution Ave., NW., Washington, DC. The EPA/DC Public Reading Room is open from 8:30 a.m. to 4:30 p.m., Monday through Friday, excluding legal holidays. The telephone number for the Reading Room is 202–566–1744, and the telephone number for the Office of Air and Radiation Docket is 202–566–1742.

Use EPA's electronic docket and comment system at *http://www.regulations.gov* to submit or view public comments, access the index listing of the contents of the docket, and to access those documents in the docket that are available electronically. Once in the system, select "docket search," then key in the docket ID number identified above. Please note that EPA's policy is that public comments, whether submitted electronically or in paper, will be made available for public viewing at *http://www.regulations.gov* as EPA receives them and without change, unless the comment contains copyrighted material, confidential business information (CBI), or other information whose public disclosure is restricted by statute. For further information about the electronic docket, go to *http://www.regulations.gov.*

Title: RadNet (Renewal).

ICR numbers: EPA ICR No. 0877.10, OMB Control No. 2060–0015.

ICR Status: This ICR is scheduled to expire on May 31, 2010. Under OMB regulations, the Agency may continue to conduct or sponsor the collection of information while this submission is pending at OMB. An Agency may not conduct or sponsor, and a person is not required to respond to, a collection of information, unless it displays a currently valid OMB control number. The OMB control numbers for EPA's regulations in title 40 of the CFR, after appearing in the **Federal Register** when approved, are listed in 40 CFR part 9 and are displayed either by publication in the **Federal Register** or by other appropriate means, such as on the related collection instrument or form, if applicable. The display of OMB control numbers in certain EPA regulations is consolidated in 40 CFR part 9.

Abstract: RadNet is a national network of stations collecting sampling media that include air, precipitation, drinking water, and milk. Samples are sent to EPA's National Air and Radiation Environmental Laboratory (NAREL) in Montgomery, Alabama, where they are analyzed for radioactivity. RadNet provides emergency response/homeland security and ambient monitoring information on levels of environmental radiation across the nation. All stations, usually operated by State and local personnel, participate in RadNet voluntarily. Station operators complete information forms that accompany the samples. The forms request descriptive information pertaining to sample location, *e.g.,* sample type, sample location, length of sampling period, and volume represented.

Burden Statement: The annual public reporting and recordkeeping burden for this collection of information is estimated to average less than one hour per response. Burden means the total time, effort, or financial resources expended by persons to generate, maintain, retain, or disclose or provide information to or for a Federal agency. This includes the time needed to review instructions; develop, acquire, install, and utilize technology and systems for the purposes of collecting, validating, and verifying information, processing and maintaining information, and disclosing and providing information; adjust the existing ways to comply with any previously applicable instructions and requirements which have subsequently changed; train personnel to be able to respond to a collection of information; search data sources; complete and review the collection of information; and transmit or otherwise disclose the information.

Respondents/Affected Entities: All fifty States, primarily the State Public Health Departments.

Estimated Number of Respondents: 302.

Frequency of Response: Frequency varies according to medium being sampled: Milk, quarterly; drinking water, quarterly; rain (precipitation), as events occur; and air, twice weekly.

Estimated Total Annual Hour Burden: 8,710.

Estimated Total Annual Cost: $480,073 in labor costs and no capital or O&M costs.

Changes in the Estimates: There is a decrease of 623 hours in the total estimated burden currently identified in the OMB Inventory of Approved ICR Burdens. This decrease resulted from the installation of new air monitors, which require less time from the station operators. The new equipment was installed as a result of EPA's decision to upgrade existing air monitoring equipment.

Dated: May 18, 2010.

John Moses,

Director, Collection Strategies Division.

[FR Doc. 2010–12387 Filed 5–21–10; 8:45 am]

BILLING CODE 6560–50–P

ENVIRONMENTAL PROTECTION AGENCY

[FRL–9154–3; Docket ID No. EPA–HQ–ORD–2008–0663]

An Exposure Assessment of Polybrominated Diphenyl Ethers (PBDEs)

AGENCY: Environmental Protection Agency (EPA).

ACTION: Notice of availability.

SUMMARY: The U.S. Environmental Protection Agency (EPA) is announcing the availability of a final report titled, "An Exposure Assessment of Polybrominated Diphenyl Ethers" (EPA/600/R–08/086F). This document was prepared by the National Center for Environmental Assessment (NCEA) within EPA's Office of Research and Development in support of objectives identified in EPA's 2006 *Polybrominated Diphenyl Ethers (PBDEs) Project Plan.* This document

provides an assessment of the exposure of Americans to polybrominated diphenyl ethers (PBDEs), a class of brominated flame retardants. It includes chapters on use and production of PBDEs, environmental fate, environmental and exposure media concentrations, and an exposure assessment including background exposures and exposures to special populations.

DATES: The document will be available on or about May 24, 2010.

ADDRESSES: The report titled, "An Exposure Assessment of Polybrominated Diphenyl Ethers" (EPA/600/R–08/086F) will be available primarily via the Internet on the NCEA home page under the Recent Additions and Publications menus at *http://www.epa.gov/ncea.* A limited number of paper copies are available from the Information Management Team (Address: Information Management Team, National Center for Environmental Assessment (Mail Code: 8601P), U.S. Environmental Protection Agency, 1200 Pennsylvania Avenue, NW., Washington, DC 20460; telephone: 703–347–8561; facsimile: 703–347–8691). If you request a paper copy, please provide your name, mailing address, and the document title, "An Exposure Assessment of Polybrominated Diphenyl Ethers" (EPA/600/R–08/086F).

FOR FURTHER INFORMATION CONTACT: For technical information, contact Mr. Matthew Lorber, NCEA; telephone: 703–347–8535; facsimile: 703–347–8692; or e-mail: *lorber.matthew@epa.gov.*

SUPPLEMENTARY INFORMATION:

I. Information About the Document

This document provides an assessment of the exposure of Americans to polybrominated diphenyl ethers (PBDEs), a class of brominated flame retardants. The use of PBDEs as flame retardants in products associated with the indoor environment has led to exposures primarily associated with indoor dust. This exposure pattern differs from other persistent organic pollutants, such as dioxins and PCBs, where exposure is dominated by food ingestion. Human biomonitoring data indicate blood levels of PBDEs in the United States are higher than those measured in other parts of the world. Intake doses, expressed on a body weight basis, are highest for infants who breast feed and higher for children compared with those for adults.

In December 2008, the draft report was released for independent external review, and a **Federal Register** notice published on December 4, 2008, announced the start of a public review and comment period. This final report addresses comments received from both the external peer review panel and the public.

Dated: May 3, 2010.

Rebecca Clark,

Acting Director, National Center for Environmental Assessment.

[FR Doc. 2010–12378 Filed 5–21–10; 8:45 am]

BILLING CODE 6560–50–P

ENVIRONMENTAL PROTECTION AGENCY

[FRL–9154–6]

Science Advisory Board Staff Office; Notification of a Public Teleconference and Public Meeting of the SAB Dioxin Review Panel

AGENCY: Environmental Protection Agency (EPA).

ACTION: Notice.

SUMMARY: The EPA Science Advisory Board (SAB) Staff Office announces a teleconference and a face-to-face meeting of the SAB Dioxin Review Panel to review *EPA's Reanalysis of Key Issues Related to Dioxin Toxicity and Response to NAS Comments,* External Review Draft.

DATES: There will be a public teleconference on June 24, 2010 from 1 p.m. to 3:30 p.m. (Eastern Daylight Time). The public meeting will be on July 13 from 9 a.m. to 5:30 p.m., July 14 from 8:30 a.m. to 5 p.m., and July 15 from 8:30 a.m. to 3 p.m. (Eastern Daylight Time).

ADDRESSES: The teleconference will be conducted by phone only. The face-to-face meeting on July 13–15 will be held at The Hilton Embassy Row Hotel, 2015 Massachusetts Avenue, NW., Washington, DC 20036; telephone (202) 265–1600.

FOR FURTHER INFORMATION CONTACT: Any member of the public wishing to obtain information concerning the public teleconference and public meeting may contact Dr. Thomas Armitage, Designated Federal Officer (DFO), EPA Science Advisory Board Staff Office (1400F), U.S. Environmental Protection Agency, 1200 Pennsylvania Avenue, NW., Washington, DC 20460; by telephone/voice mail at (202) 343–9995 or via e-mail at *armitage.thomas@epa.gov.* General information about the SAB, as well as any updates concerning the meeting announced in this notice, may be found on the SAB Web site at: *http://www.epa.gov/sab.*

SUPPLEMENTARY INFORMATION: Pursuant to the Federal Advisory Committee Act (FACA), 5 U.S.C., App. 2, notice is hereby given that the SAB Dioxin Review Panel will hold a public teleconference to discuss the plans for the subsequent public face-to-face meeting to conduct a peer review of *EPA's Reanalysis of Key Issues Related to Dioxin Toxicity and Response to NAS Comments,* External Review Draft (May 2010). The SAB was established pursuant to 42 U.S.C. 4365 to provide independent scientific and technical advice to the Administrator on the technical basis for Agency positions and regulations. The SAB is a Federal Advisory Committee chartered under FACA. The SAB will comply with the provisions of FACA and all appropriate SAB Staff Office procedural policies.

Background: In 2003, EPA's Office of Research and Development (ORD) developed a comprehensive reassessment of the health risks of dioxin and related compounds. In 2004, EPA asked the National Research Council of the National Academy of Sciences (NAS) to review the 2003 dioxin reassessment document. In 2006, The NAS published its review and identified three areas that required substantial improvement to support a scientifically robust risk characterization. These areas were: (1) Justification of approaches to dose-response modeling for cancer and non-cancer endpoints; (2) transparency and clarity in selection of key data sets for analysis; and (3) transparency, thoroughness, and clarity in quantitative uncertainty analysis. The full NAS report, including recommendations, is available at *http://books.nap.edu/catalog.php?record_id=11688.*

In response to the recommendations presented in the 2006 NAS review, the EPA published a "Science Plan for Activities Related to Dioxins in the Environment" on May 26, 2009. The plan states that EPA will prepare a draft report that responds to the recommendations and comments in the NAS report and that the SAB will peer review the science content of EPA's draft report. Following the SAB review, EPA will release the final response to comments report, and focus on completion of the 2003 reassessment.

In response to the request from ORD, the SAB staff office solicited nominations of experts and formed a review panel for dioxin [**Federal Register** Notice dated October 15, 2008 (73 FR 61114–61115)]. The SAB panel will conduct a review of the May 2010 External Review Draft of *EPA's Reanalysis of Key Issues Related to Dioxin Toxicity and Response to NAS*

Comments. Specifically, the panel is being asked to evaluate: The transparency and clarity in the selection of key data sets for dose-response analysis; the use of toxicokinetics in dose-response modeling for cancer and non-cancer endpoints; the derivation of the chronic reference dose; cancer assessment; and EPA's comments regarding the feasibility of the quantitative uncertainty analysis from the NAS evaluation of the 2003 reassessment. The purpose of the teleconference is for the panel to be briefed on the EPA draft response to comments document and to allow panel members to ask clarifying questions on the charge to the panel. During the face-to-face meeting, the panel will review the draft EPA document.

Availability of Meeting Materials: Agendas and materials in support of these meetings will be placed on the SAB Web site at *http://www.epa.gov/sab* in advance of each meeting. For technical questions and information concerning EPA's draft document, please contact Dr. Glenn Rice at (513) 569–7813, or *rice.glenn@epa.gov.*

Procedures for Providing Public Input: Public comment for consideration by EPA's federal advisory committees and panels has a different purpose from public comment provided to EPA program offices. Therefore, the process for submitting comments to a federal advisory committee is different from the process used to submit comments to an EPA program office. Federal advisory committees and panels, including scientific advisory committees, provide independent advice to EPA. Members of the public can submit comments for a Federal advisory committee to consider as it develops advice for EPA. They should send their comments directly to the Designated Federal Officer for the relevant advisory committee. *Oral Statements:* In general, individuals or groups requesting an oral presentation at a public teleconference will be limited to three minutes per speaker, with no more than a total of 30 minutes for all speakers. At the face-to-face meeting, presentations will be limited to five minutes, with no more than a total of one hour for all speakers. Each person making an oral statement should consider providing written comments as well as their oral statement so that the points presented orally can be expanded upon in writing. Interested parties should contact Dr. Thomas Armitage, DFO, in writing (preferably via e-mail) at the contact information noted above, by June 21, 2010 for the teleconference, and by July 7, 2010 for the face-to-face meeting, to be placed on the list of public speakers. *Written Statements:* Written statements should be supplied to the DFO via e-mail at the contact information noted above, by June 22, 2010 for the teleconference, and by July 9, 2010 for the face-to-face meeting so that the information may be made available to the Committee members for their consideration. Written statements should be supplied in one of the following electronic formats: Adobe Acrobat PDF, MS Word, MS PowerPoint, or Rich Text files in IBM–PC/Windows 98/2000/XP format. Submitters are requested to provide versions of signed documents, submitted with and without signatures, because the SAB Staff Office does not publish documents with signatures on its Web sites.

Accessibility: For information on access or services for individuals with disabilities, please contact Dr. Thomas Armitage at (202) 343–9995 or *armitage.thomas@epa.gov.* To request accommodation of a disability, please contact Dr. Armitage preferably at least ten days prior to the teleconference to give EPA as much time as possible to process your request.

Dated: May 17, 2010.

Anthony F. Maciorowski,

Deputy Director, EPA Science Advisory Board Staff Office.

[FR Doc. 2010–12397 Filed 5–21–10; 8:45 am]

BILLING CODE 6560–50–P

FARM CREDIT ADMINISTRATION

Sunshine Act Meeting

AGENCY: Farm Credit Administration.

SUMMARY: Notice is hereby given, pursuant to the Government in the Sunshine Act (5 U.S.C. 552b(e)(3)), of the regular meeting of the Farm Credit Administration Board (Board).

DATES: *Date and Time:* The regular meeting of the Board will be held at the offices of the Farm Credit Administration in McLean, Virginia, on June 10, 2010, from 9 a.m. until such time as the Board concludes its business.

FOR FURTHER INFORMATION CONTACT: Roland E. Smith, Secretary to the Farm Credit Administration Board, (703) 883–4009, TTY (703) 883–4056.

ADDRESSES: Farm Credit Administration, 1501 Farm Credit Drive, McLean, Virginia 22102–5090.

SUPPLEMENTARY INFORMATION: Parts of this meeting of the Board will be open to the public (limited space available), and parts will be closed to the public. In order to increase the accessibility to Board meetings, persons requiring assistance should make arrangements in advance. The matters to be considered at the meeting are:

Open Session

A. Approval of Minutes

- May 13, 2010.

B. New Business—Regulations

- Advance Notice of Proposed Rulemaking—Capital Adequacy—Capital Components; Basel Accord Tier 1/Tier 2.
- Direct Final Rule—Technical Changes.

Closed Session*

Reports

- Office of Secondary Market Oversight Quarterly Report.

Dated: May 19, 2010.

Roland E. Smith,

Secretary, Farm Credit Administration Board.

[FR Doc. 2010–12527 Filed 5–20–10; 4:15 pm]

BILLING CODE 6705–01–P

FEDERAL COMMUNICATIONS COMMISSION

Notice of Public Information Collection(s) Being Reviewed by the Federal Communications Commission, Comments Requested

May 14, 2010.

SUMMARY: The Federal Communications Commission, as part of its continuing effort to reduce paperwork burden invites the general public and other Federal agencies to take this opportunity to comment on the following information collection(s), as required by the Paperwork Reduction Act (PRA) of 1995, 44 U.S.C. 3501 – 3520. Comments are requested concerning: (a) whether the proposed collection of information is necessary for the proper performance of the functions of the Commission, including whether the information shall have practical utility; (b) the accuracy of the Commission's burden estimate; (c) ways to enhance the quality, utility, and clarity of the information collected; (d) ways to minimize the burden of the collection of information on the respondents, including the use of automated collection techniques or other forms of information technology, and (e) ways to further reduce the information collection burden on small business concerns with fewer than 25 employees.

* Session Closed-Exempt pursuant to 5 U.S.C. 552b(c)(8) and (9).

The FCC may not conduct or sponsor a collection of information unless it displays a currently valid control number. No person shall be subject to any penalty for failing to comply with a collection of information subject to the Paperwork Reduction Act (PRA) that does not display a currently valid OMB control number.

DATES: Written Paperwork Reduction Act (PRA) comments should be submitted on or before July 23, 2010. If you anticipate that you will be submitting PRA comments, but find it difficult to do so within the period of time allowed by this notice, you should advise the FCC contact listed below as soon as possible.

ADDRESSES: Direct all PRA comments to Nicholas A. Fraser, Office of Management and Budget, via fax at 202–395–5167 or via the Internet at Nicholas_A._Fraser@omb.eop.gov and to the Federal Communications Commission via email to PRA@fcc.gov.

FOR FURTHER INFORMATION CONTACT: Judith B. Herman, Office of Managing Director, (202) 418–0214. For additional information, contact Judith B. Herman, OMD, 202–418–0214 or email judith–b.herman@fcc.gov.

SUPPLEMENTARY INFORMATION:

OMB Control Number: 3060–0806.

Title: Universal Service – Schools and Libraries Universal Service Program.

Form Nos.: FCC Forms 470 and 471.

Type of Review: Revision of a currently approved collection.

Respondents: Business or other for–profit, not–for–profit institutions and state, local or tribal government.

Number of Respondents and Responses: 45,000 respondents, 160,000 responses.

Estimated Time Per Response: 3 – 4 hours.

Frequency of Response: On occasion and annual reporting requirements, recordkeeping requirement and third party disclosure requirement.

Obligation to Respond: Required to obtain or retain benefits. Statutory authority for this information collection is contained in 47 U.S.C. section 254 and Pub. L. No. 107–110, Leave No Child Behind Act of 2002.

Total Annual Burden: 325,000 hours.

Total Annual Cost: N/A.

Privacy Act Impact Assessment: N/A.

Nature and Extent of Confidentiality: There is no need for confidentiality.

Needs and Uses: The Commission will submit this revised information collection to the Office of Management and Budget (OMB) after this comment period to obtain the full three year clearance from them. The Commission has reduced the annual burden hours by 200,003 hours (78,573 hours program change reduction and 121,430 hours adjusted due to recalculations of the burden estimates).

The Commission is revising this collection in an effort to streamline the application process for the federal universal service schools and libraries support mechanism (also referred to as the "E–Rate" program) and to remove outdated and unneeded questions. We propose revising the forms by removing questions that were originally intended to assist service providers but are no longer useful; and by removing questions that are outside the scope of the information needed for the Universal Service Administrative Company (USAC), the administrator of the federal universal service fund and to process E–Rate applications. We further proposed limiting data collection to information that is not already available through other USAC forms or review processes. Finally, applicants will be required to include their FCC Registration Numbers (FRNs) and consultants must provide their contact information, when applicable, on FCC Forms 470 and 471.

Federal Communications Commission.

Marlene H. Dortch,

Secretary, Office of the Secretary, Office of Managing Director.

[FR Doc. 2010–12327 Filed 5–21–10; 8:45 am]

BILLING CODE 6712–01–S

FEDERAL DEPOSIT INSURANCE CORPORATION

Update to Notice of Financial Institutions for Which the Federal Deposit Insurance Corporation Has Been Appointed Either Receiver, Liquidator, or Manager

AGENCY: Federal Deposit Insurance Corporation.

ACTION: Update listing of financial institutions in liquidation.

SUMMARY: Notice is hereby given that the Federal Deposit Insurance Corporation (Corporation) has been appointed the sole receiver for the following financial institutions effective as of the Date Closed as indicated in the listing. This list (as updated from time to time in the **Federal Register**) may be relied upon as "of record" notice that the Corporation has been appointed receiver for purposes of the statement of policy published in the July 2, 1992 issue of the **Federal Register** (57 FR 29491). For further information concerning the identification of any institutions which have been placed in liquidation, please visit the Corporation Web site at *www.fdic.gov/bank/individual/failed/banklist.html* or contact the Manager of Receivership Oversight in the appropriate service center.

Dated: May 17, 2010.

Federal Deposit Insurance Corporation.

Pamela Johnson,

Regulatory Editing Specialist.

INSTITUTIONS IN LIQUIDATION

[In alphabetical order]

FDIC Ref. No.	Bank name	City	State	Date closed
10236	Midwest Bank and Trust Company	Elmwood Park	IL	5/14/2010
10237	New Liberty Bank	Plymouth	MI	5/14/2010
10238	Satilla Community Bank	Saint Marys	GA	5/14/2010
10239	Southwest Community Bank	Springfield	MO	5/14/2010

[FR Doc. 2010–12386 Filed 5–21–10; 8:45 am]

BILLING CODE 6714–01–P

FEDERAL ELECTION COMMISSION

Sunshine Act Notice

AGENCY: Federal Election Commission.

DATE AND TIME: Tuesday, May 25, 2010, at 10 a.m.

PLACE: 999 E Street, NW., Washington, DC.

STATUS: This meeting will be closed to the public.

Items To Be Discussed

Compliance matters pursuant to 2 U.S.C. 437g.

Audits conducted pursuant to 2 U.S.C. 437g, 438(b), and Title 26, U.S.C.

Matters concerning participation in civil actions or proceedings or arbitration.

Internal personnel rules and procedures or matters affecting a particular employee.

* * * * *

PERSON TO CONTACT FOR INFORMATION: Judith Ingram, Press Officer. Telephone: (202) 694–1220.

Darlene Harris,

Acting Secretary of the Commission.

[FR Doc. 2010–12345 Filed 5–21–10; 8:45 am]

BILLING CODE 6715–01–M

DEPARTMENT OF DEFENSE

GENERAL SERVICES ADMINISTRATION

NATIONAL AERONAUTICS AND SPACE ADMINISTRATION

[OMB Control No. 9000–0135; Docket 2010–0083; Sequence 23]

Federal Acquisition Regulation; Information Collection; Prospective Subcontractor Requests for Bonds

AGENCIES: Department of Defense (DOD), General Services Administration (GSA), and National Aeronautics and Space Administration (NASA).

ACTION: Notice of request for public comments regarding an extension to an existing OMB clearance.

SUMMARY: Under the provisions of the Paperwork Reduction Act of 1995 (44 U.S.C. Chapter 35), the Regulatory Secretariat will be submitting to the Office of Management and Budget (OMB) a request to review and approve an extension of a previously approved information collection concerning subcontractor requests for bonds.

Public comments are particularly invited on: Whether this collection of information is necessary for the proper performance of functions of the FAR, and whether it will have practical utility; whether our estimate of the public burden of this collection of information is accurate, and based on valid assumptions and methodology; ways to enhance the quality, utility, and clarity of the information to be collected; and ways in which we can minimize the burden of the collection of information on those who are to respond, through the use of appropriate technological collection techniques or other forms of information technology.

DATES: Submit comments on or before July 23, 2010.

ADDRESSES: Submit comments identified by Information Collection 9000–0135 by any of the following methods:

- *Regulations.gov: http://www.regulations.gov.* Submit comments via the Federal eRulemaking portal by inputting "Information Collection 9000–0135" under the heading "Enter Keyword or ID" and selecting "Search". Select the link "Submit a Comment" that corresponds with "Information Collection 9000–0135". Follow the instructions provided at the "Submit a Comment" screen. Please include your name, company name (if any), and "Information Collection 9000–0135" on your attached document.
- *Fax:* 202–501–4067.
- *Mail:* General Services Administration, Regulatory Secretariat (MVCB), 1800 F Street, NW., Room 4041, Washington, DC 20405. *Attn:* Hada Flowers/IC 9000–0135.

Instructions: Please submit comments only and cite Information Collection 9000–0135, in all correspondence related to this collection. All comments received will be posted without change to *http://www.regulations.gov,* including any personal and/or business confidential information provided.

FOR FURTHER INFORMATION CONTACT: Ms. Cecelia Davis, Procurement Analyst, Contract Policy Branch, GSA (202) 219–0202 or e-mail *Cecelia.davis@gsa.gov.*

SUPPLEMENTARY INFORMATION:

A. Purpose

Part 28 of the FAR contains guidance related to obtaining financial protection against damages under Government contracts (*e.g.,* use of bonds, bid guarantees, insurance etc.). Part 52 contains the texts of solicitation provisions and contract clauses. These regulations implement a statutory requirement for information to be provided by Federal contractors relating to payment bonds furnished under construction contracts which are subject to the Miller Act (40 U.S.C. 270a–270d). This collection requirement is mandated by Section 806 of the National Defense Authorization Act for Fiscal Years 1992 and 1993 (Pub. L. 102–190), as amended by Section 2091 of the Federal Acquisition Streamlining Act of 1994 (Pub. L. 103–335). The clause at 52.228–12, Prospective Subcontractor Requests for Bonds, implements Section 806(a)(3) of Public Law 102–190, as amended, which specifies that, upon the request of a prospective subcontractor or supplier offering to furnish labor or material for the performance of a construction contract for which a payment bond has been furnished to the United States pursuant to the Miller Act, the contractor shall promptly provide a copy of such payment bond to the requestor.

In conjunction with performance bonds, payment bonds are used in Government construction contracts to secure fulfillment of the contractor's obligations under the contract and to assure that the contractor makes all payments, as required by law, to persons furnishing labor or material in performance of the contract. This regulation provides prospective subcontractors and suppliers a copy of the payment bond furnished by the contractor to the Government for the performance of a Federal construction contract subject to the Miller Act. It is expected that prospective subcontractors and suppliers will use this information to determine whether to contract with that particular prime contractor. This information has been and will continue to be available from the Government. The requirement for contractors to provide a copy of the payment bond upon request to any prospective subcontractor or supplier under the Federal construction contract is contained in Section 806(a)(3) of Public Law 102–190, as amended by Sections 2091 and 8105 of Public Law 103–355.

B. Annual Reporting Burden

Respondents: 12,698.

Responses per Respondent: 5.

Total Responses: 63,490.

Hours per Response: .25.

Total Burden Hours: 15,872.50.

Obtaining Copies of Proposals: Requesters may obtain a copy of the information collection documents from the General Services Administration, Regulatory Secretariat (MVCB), 1800 F Street, NW., Room 4041, Washington, DC 20405, telephone (202) 501–4755. Please cite OMB Control Number 9000–0135, Prospective Subcontractor Requests for Bonds, in all correspondence.

Dated: May 14, 2010.

Al Matera,

Director, Acquisition Policy Division.

[FR Doc. 2010–12371 Filed 5–21–10; 8:45 am]

BILLING CODE 6820–EP–P

DEPARTMENT OF HEALTH AND HUMAN SERVICES

Office of the Secretary

Notice of Request for Public Comment

AGENCY: Secretary's Advisory Committee on Genetics, Health, and Society, Office of the Secretary, Department of Health and Human Services.

SUMMARY: The Secretary's Advisory Committee on Genetics, Health, and Society (SACGHS) is requesting public comment on a draft report to the Secretary of Health and Human Services (HHS) on genetics education and training of health care professionals, public health providers, and consumers. A copy of the draft report is available electronically at *http://oba.od.nih.gov/SACGHS/sacghs_public_comments.html.* A copy may also be obtained by contacting Kathryn Camp at *campkm@od.nih.gov* or 301–496–9838.

DATES: Please submit all public comments by June 30, 2010, for consideration by SACGHS as it finalizes its report to the Secretary.

ADDRESSES: Public comments on the draft report should be addressed to Steven Teutsch, MD, MPH, SACGHS Chair, and transmitted via e-mail to Kathryn Camp at *campkm@od.nih.gov.*

Comments may also be mailed to SACGHS, attn: Kathryn Camp, Office of Biotechnology Activities, National Institutes of Health, 6705 Rockledge Drive, Suite 750, Bethesda, MD 20892, or faxed to 301–496–9839.

FOR FURTHER INFORMATION CONTACT: Kathryn Camp, NIH Office of Biotechnology Activities, 6705 Rockledge Drive, Suite 750, Bethesda, MD 20892, 301–496–9838, *campkm@od.nih.gov.*

SUPPLEMENTARY INFORMATION: The Department of Health and Human Services (HHS) established SACGHS to serve as a public forum for deliberations on the broad range of human health and societal issues raised by the development and use of genetic technologies and, as warranted, to provide advice on these issues. For more information about the Committee, please visit its Web site: *http://oba.od.nih.gov/SACGHS/sacghs_public_comments.html.*

SACGHS identified genetics education and training of health care professionals, the public health workforce, and consumers as a high priority during its 2004 and 2008 priority-setting processes. Providing genetics education and training for health professionals is vital to achieve the optimal use of genetic and genomic technologies and ensure the appropriate integration of genetic knowledge into the health care and public health systems. In addition, the public will need sound information regarding the role of genetics and genomics in health and disease and guidance to assist in informed decisionmaking as the availability of genetic tests and direct-to-consumer genetic services increases.

The draft report, *Genetics Education and Training of Health Care Professionals, Public Health Providers, and Consumers,* discusses the current state of genetics education and training of health care professionals, public health providers, and consumers and explores genetics education and training activities of Federal departments and agencies, health professional organizations, and consumer advocacy groups. It presents recommendations in three major areas: (1) The genetics education and training needs and gaps for health care professionals, public health providers, and consumers; (2) the specific needs of health care professionals and public health providers who work with underserved and underrepresented groups and populations and the needs of consumers with varying literacy levels; and (3) the importance of family health history in risk assessment and health promotion. Once finalized, the report and recommendations will be transmitted to the Secretary of Health and Human Services.

SACGHS is requesting comments on all aspects of the draft report and recommendations. In particular, the Committee would welcome feedback on the following questions:

- Are the discussions of topics and issues accurate and complete?
- Do the conclusions of the draft report follow from the literature review and SACGHS survey and interview results?
- Do the draft recommendations target the issues and concerns identified in this report?
- Are the recommendations specific enough? Do they rely to the appropriate degree on the public sector? On the private sector? On public-private partnerships?
- Which draft recommendations should be of highest priority for the Federal government to address?

Comments received by June 30, 2010, will be considered by SACGHS in preparing the final report. The revised draft report and public comments will be discussed at a future SACGHS meeting.

Comments will also be available for public inspection at the NIH Office of Biotechnology Activities, Monday through Friday, between the hours of 9 a.m. and 5 p.m.

Dated: May 18, 2010.

Anna Snouffer,

Deputy Director, Office of Federal Advisory Committee Policy.

[FR Doc. 2010–12450 Filed 5–21–10; 8:45 am]

BILLING CODE 4140–01–P

DEPARTMENT OF HEALTH AND HUMAN SERVICES

Administration on Aging

Agency Information Collection Activities; Submission for OMB Review; Comment Request; Alzheimer's Disease Supportive Services Program Standardized Data Collection

AGENCY: Administration on Aging, HHS.

ACTION: Notice.

SUMMARY: The Administration on Aging (AoA) is announcing that the proposed collection of information listed below has been submitted to the Office of Management and Budget (OMB) for review and clearance under the Paperwork Reduction Act of 1995.

DATES: Submit written comments on the collection of information by June 23, 2010.

ADDRESSES: Submit written comments on the collection of information by fax 202.395.6974 to the OMB Desk Officer for AoA, Office of Information and Regulatory Affairs, OMB.

FOR FURTHER INFORMATION CONTACT: Shannon Skowronski at 202.357.0149 or e-mail: *shannon.skowronski@aoa.hhs.gov.*

SUPPLEMENTARY INFORMATION: In compliance with 44 U.S.C. 3507, AoA has submitted the following proposed collection of information to OMB for review and clearance.

The Alzheimer's Disease Supportive Services Program (ADSSP) is authorized through Sections 398, 399 and 399A of the Public Health Services (PHS) Act, as amended by Public Law 101–557 Home Health Care and Alzheimer's Disease Amendments of 1990. The ADSSP helps states extend supportive services to persons with Alzheimer's disease and their caregivers, including underserved populations.

In compliance with the PHS Act, AoA developed an ADSSP Data Collection Reporting Tool (ADSSP–DCRT) in 2007. The ADSSP–DCRT collects information about the delivery of direct services by

ADSSP state grantees, as well as basic demographic information about service recipients. This revised version includes some revisions to the approved 2007 version. The revised version would be in effect for the FY2011 reporting year and thereafter, while the current reporting tool, OMB Approval Number 0985–0022, would be extended to the end of the FY2010 reporting cycle.

The proposed FY2011 ADSSP–DCRT can be found on AoA's Web site at: *http://www.aoa.gov/AoARoot/AoA_Programs/HCLTC/Alz_Grants/docs/ADSSP.pdf.*

AoA estimates the burden of this collection of information as follows: 1410 hours.

Dated: May 18, 2010.

Kathy Greenlee,

Assistant Secretary for Aging.

[FR Doc. 2010–12357 Filed 5–21–10; 8:45 am]

BILLING CODE 4154–01–P

DEPARTMENT OF HEALTH AND HUMAN SERVICES

National Institutes of Health

National Institute of General Medical Sciences; Notice of Closed Meeting

Pursuant to section 10(d) of the Federal Advisory Committee Act, as amended (5 U.S.C. App.), notice is hereby given of the following meeting.

The meeting will be closed to the public in accordance with the provisions set forth in sections 552b(c)(4) and 552b(c)(6), Title 5 U.S.C., as amended. The grant applications and the discussions could disclose confidential trade secrets or commercial property such as patentable materials, and personal information concerning individuals associated with the grant applications, the disclosure of which would constitute a clearly unwarranted invasion of personal privacy.

Name of Committee: National Institute of General Medical Sciences Special Emphasis Panel; LPR.

Date: May 28, 2010.

Time: 9 a.m. to 12 p.m.

Agenda: To review and evaluate grant applications.

Place: National Institutes of Health, Natcher Building, 45 Center Drive, Room 3AN12B, Bethesda, MD 20892 (Virtual Meeting).

Contact Person: Helen R. Sunshine, PhD, Chief, Office of Scientific Review, National Institute of General Medical Sciences, National Institutes of Health, Natcher Building, Room 3AN–12F, Bethesda, MD 20892, (301) 594–2881, *sunshinh@nigms.nih.gov.*

This notice is being published less than 15 days prior to the meeting due to the timing limitations imposed by the review and funding cycle.

(Catalogue of Federal Domestic Assistance Program Nos. 93.375, Minority Biomedical Research Support; 93.821, Cell Biology and Biophysics Research; 93.859, Pharmacology, Physiology, and Biological Chemistry Research; 93.862, Genetics and Developmental Biology Research; 93.88, Minority Access to Research Careers; 93.96, Special Minority Initiatives, National Institutes of Health, HHS)

Dated: May 18, 2010.

Ann Snouffer,

Deputy Director, Office of Federal Advisory Committee Policy.

[FR Doc. 2010–12446 Filed 5–21–10; 8:45 am]

BILLING CODE 4140–01–P

DEPARTMENT OF HEALTH AND HUMAN SERVICES

Centers for Disease Control and Prevention

Disease, Disability, and Injury Prevention and Control Special Emphasis Panel (SEP): Conducting Public Health Research in Kenya (Panel C), Funding Opportunity Announcement (FOA) GH10–003, Initial Review

In accordance with Section 10(a)(2) of the Federal Advisory Committee Act (Pub. L. 92–463), the Centers for Disease Control and Prevention (CDC) announces the aforementioned meeting:

Time and Date: 12 p.m.–3 p.m., June 24, 2010 (Closed).

Place: Teleconference.

Status: The meeting will be closed to the public in accordance with provisions set forth in Section 552b(c)(4) and (6), Title 5 U.S.C., and the Determination of the Director, Management Analysis and Services Office, CDC, pursuant to Public Law 92–463.

Matters To Be Discussed: The meeting will include the initial review, discussion, and evaluation of applications received in response to "Conducting Public Health Research in Kenya (Panel C)," FOA GH10–003.

Contact Person for More Information: Christine Morrison, PhD, Scientific Review Administrator, CDC, 1600 Clifton Road, NE., Mailstop D72, Atlanta, GA 30333, Telephone: (404) 639–3098.

The Director, Management Analysis and Services Office, has been delegated the authority to sign **Federal Register** notices pertaining to announcements of meetings and other committee management activities, for both CDC and the Agency for Toxic Substances and Disease Registry.

Dated: May 14, 2010.

Elaine L. Baker,

Director, Management Analysis and Services Office, Centers for Disease Control and Prevention.

[FR Doc. 2010–12355 Filed 5–21–10; 8:45 am]

BILLING CODE 4163–18–P

DEPARTMENT OF HEALTH AND HUMAN SERVICES

Centers for Disease Control and Prevention

Disease, Disability, and Injury Prevention and Control Special Emphasis Panel (SEP): Addressing Emerging Infectious Diseases and Related Public Health Concerns in India, Funding Opportunity Announcement (FOA) GH10–002, Initial Review

In accordance with Section 10(a)(2) of the Federal Advisory Committee Act (Pub. L. 92–463), the Centers for Disease Control and Prevention (CDC) announces the aforementioned meeting:

Time and Date: 11 a.m.–2 p.m., July 1, 2010 (Closed).

Place: Teleconference.

Status: The meeting will be closed to the public in accordance with provisions set forth in Section 552b(c)(4) and (6), Title 5 U.S.C., and the Determination of the Director, Management Analysis and Services Office, CDC, pursuant to Public Law 92–463.

Matters To Be Discussed: The meeting will include the initial review, discussion, and evaluation of applications received in response to "Addressing Emerging Infectious Diseases and Related Public Health Concerns in India," FOA GH10–002.

Contact Person for More Information: Hylan D. Shoob, PhD, M.S.P.H., Scientific Review Officer, CDC, 1600 Clifton Road, NE., Mailstop D72, Atlanta, GA 30333, Telephone: (404) 639–4796.

The Director, Management Analysis and Services Office, has been delegated the authority to sign **Federal Register** notices pertaining to announcements of meetings and other committee management activities, for both CDC and the Agency for Toxic Substances and Disease Registry.

Dated: May 14, 2010.

Elaine L. Baker,

Director, Management Analysis and Services Office, Centers for Disease Control and Prevention.

[FR Doc. 2010–12356 Filed 5–21–10; 8:45 am]

BILLING CODE 4163–18–P

DEPARTMENT OF HEALTH AND HUMAN SERVICES

National Institutes of Health

Office of Biotechnology Activities; Recombinant DNA Research: Proposed Actions Under the *NIH Guidelines for Research Involving Recombinant DNA Molecules (NIH Guidelines)*

ACTION: Notice of consideration of a proposed action under Section III–A–1 of the *NIH Guidelines.*

SUMMARY: The *NIH Guidelines* requires certain recombinant research to be reviewed by the NIH Recombinant DNA Advisory Committee and approved by the NIH Director (Section III–A–1). Such research involves the introduction of drug resistance into a microorganism if the introduction of that drug resistance trait can compromise the ability to treat disease caused by the microorganism in humans, animals or agriculture. In order to meet the threshold for consideration under Section III–A–1, the microorganism must be able to cause disease in humans, animals or agriculture.

A proposal to deliberately transfer a chloramphenicol resistance trait into an attenuated strain (CO92 lcr-) of *Yersinia pestis* has been submitted to the NIH Office of Biotechnology Activities (OBA) by the Institutional Biosafety Committee at Lawrence Livermore National Laboratory (LLNL). Treatment guidelines recommend streptomycin as the first-line antibiotic for treatment of disease caused by wild type *Y. pestis,* and gentamicin is recommended when streptomycin is not available. Doxycycline and chloramphenicol are also effective and ciprofloxacin is recommended as prophylaxis and has been shown to treat disease in animal models. The LLNL investigators will be using *Y. pestis* CO92 lcr- strains that have already been made resistant to ciprofloxacin or doxycycline through exposure of these attenuated strains to these antibiotics. The proposed research involves the addition of chloramphenicol resistance into these strains, thereby creating lcr- *Y. pestis* strains that are resistant to multiple antibiotics used to treat disease caused by this organism.

A fundamental question with respect to this line of proposed research is whether this specific strain (lcr-) has the ability to cause disease in humans and therefore should be subject to Section III–A–1 of the *NIH Guidelines.* While there is evidence that the strain is attenuated, this does not necessarily mean the strain is avirulent, and the RAC will review the evidence regarding the ability of this strain to cause disease. The recent death of a researcher at the University of Chicago while working with an attenuated strain of *Yersinia pestis* highlights that attenuated strains may be pathogenic in certain populations. If a determination is made that that lcr- strains do pose a potential public health risk, then these experiments will be considered at this meeting under Section III–A–1 of the *NIH Guidelines.* A recommendation will then be made as to whether this research should be allowed to proceed and, if so, under what containment conditions.

The RAC will review of this proposed work at its June 16–17, 2010 meeting, which will be held at the Hilton Washington DC/Rockville Hotel 1750 Rockville Pike, Rockville, MD and is open to the public. The public may also submit written comments.

DATES: The public is encouraged to submit written comments on this proposed action. Comments may be submitted to the OBA in paper or electronic form at the OBA mailing, fax, and e-mail addresses shown below under the heading **FOR FURTHER INFORMATION CONTACT**. All comments should be submitted by June 10, 2010. All written comments received in response to this notice will be available for public inspection in the NIH OBA office, 6705 Rockledge Drive, Suite 750, MSC 7985, Bethesda, MD 20892–7985, (Phone: 301–496–9838) weekdays between the hours of 8:30 a.m. and 5 p.m.

FOR FURTHER INFORMATION CONTACT: Contact OBA by e-mail at *oba@od.nih.gov,* or telephone at 301–496–9838, if you have questions, or require additional information about this line of research. For additional information about the RAC meeting at which this line of research will be discussed, please visit the NIH OBA Web site at: *http://oba.od.nih.gov/oba/index.html.*

SUPPLEMENTARY INFORMATION: *Yersinia pestis* is the causative organism for plague and it regulated by the Department of Health and Human Services (HHS) as a Select Agent pursuant to the Select Agent Regulations (42 CFR part 73). There are a number of attenuated strains of *Yersinia pestis* that do not contain certain virulence factors. The strain that will be used in the proposed research, *Yersinia pestis* CO92 *lcr-,* lacks the plasmid called pCD1 or the "low calcium response-lcr" plasmid since it confers calcium dependence for growth at 37° C. Loss of the pCD1 plasmid is accompanied by a concomitant loss of virulence as indicated in studies using several animal models. This strain is excluded from the HHS list of Select Biological Agents and Toxins *http://www.selectagents.gov/Select%20Agents%20and%20Toxins%20Exclusions.html#hhsAgents.*

Additional background information may be obtained by contacting NIH OBA via e-mail at *oba@od.nih.gov* or by going to the OBA Web site at *http://oba.od.nih.gov/rdna/news_events_oba.html#RAC.*

Dated: May 17, 2010.

Jacqueline Corrigan-Curay,

Acting Director, Office of Biotechnology Activities, National Institutes of Health.

[FR Doc. 2010–12453 Filed 5–21–10; 8:45 am]

BILLING CODE 4140–01–P

DEPARTMENT OF HEALTH AND HUMAN SERVICES

Centers for Disease Control and Prevention

Statement of Organization, Functions, and Delegations of Authority

Part C (Centers for Disease Control and Prevention) of the Statement of Organization, Functions, and Delegations of Authority of the Department of Health and Human Services (45 FR 67772–76, dated October 14, 1980, and corrected at 45 FR 69296, October 20, 1980, as amended most recently at 75 FR 2282 1–29, dated April 30, 2010) is amended to establish the Human Capital Management Office, Office of the Chief Operating Officer, Centers for Disease Control and Prevention.

Section C–B, Organization and Functions, is hereby amended as follows:

After the mission statement for the Office of Health and Safety (CAJP), insert the following:

Human Capital Management Office (CAJQ). (1) Develops goals and objectives and provides leadership, policy formation, oversight, and guidance in program human capital planning and development; (2) plans, directs, and manages CDC-wide training programs; (3) develops, designs, and implements a comprehensive strategic human resource leadership and career management program for all occupational series throughout CDC; (4) provides technical assistance in organizational development, career management, employee development, and training; (5) maximizes economies of scale through systematic planning

and evaluation of agency-wide training initiatives to assist CDC employees in achieving required competencies; (6) assists in the definition and analysis of training needs and develops and evaluates instructional products designed to meet those needs; (7) works with partners, internally and externally, to develop a strategic vision for the public health workforce; (8) collaborates with CDC partners to develop workforce goals for all of CDC/ATSDR; (9) provides guidance and oversight to the Excellence in Learning Council to coordinate, inform, and share strategic vision for all of CDC's Centers/Institute/Offices (CIOs); (10) conducts internal succession planning, forecasting services, and environmental scanning to ascertain both current and future public health workforce needs; (11) provides leadership, oversight, and guidance in the management and operations of programs; (12) collaborates as appropriate, with the CDC Office of the Director (OD), CIOs, domestic and international agencies and organizations and provides a focus for short- and long-term planning within the Human Capital Management Office (HCMO); (13) conducts organizational assessments of CDC/ATSDR to determine compliance with agency guidance, regulatory and statutory requirements of federal human capital programs and initiatives; (14) conducts organizational studies of human capital policies, initiative or procedures as directed by OPM, HHS, CDC or other pertinent federal agencies; and (15) administers, develops policy and provides oversight of agency individual learning accounts (ILAs) and individual development plans (IDPs), performance management and other human capital programs.

Office of the Director (CAJQ1). (1) Provides leadership and overall direction for HCMO; (2) develops goals and objectives, and provides leadership, policy formation, scientific oversight, and guidance in program planning and development; (3) plans, coordinates, and develops research plans for HCMO; (4) uses modeling and forecasting tools for workforce planning and decision making; (5) coordinates all program reviews; (6) reviews, prepares, coordinates, and develops proposed legislation, Congressional testimony, and briefing materials; (7) assists programs in establishing performance metrics and coordinates quarterly reviews with programs to ascertain status on meeting of the metrics; (8) coordinates budget formulation/negotiation related to program initiatives and goals management; (9) identifies relevant scanning/benchmarking on workforce and career development processes, services and products; (10) provides leadership and guidance on new developments and national trends for public health workforce; (11) establishes policies governing major learning initiatives and new learning activities, and works collaboratively within CDC and other components in planning, developing and implementing policies related to training initiatives, including but not limited to, ILAs, IDPs, and loan repayment programs; (12) develops unified CDC-wide administrative systems and advocates and supports the commitment of resources to application development; (13) coordinates management information systems and analyses of data for improved utilization of resources; and (14) directs systems analysis and design, programming, and systems training as it relates to implementation of new and existing administrative, management, and executive information systems.

Planning and Policy Activity (CAJQ13). (1) Provides leadership, guidance, and consulting services for CDC on strategic workforce planning, performance management, and organizational development; (2) directs improvement in human capital programs with the objectives of increasing the operational effectiveness and efficiency of agency human capital initiatives, mission, goals and objectives; (3) serves as a bridge between human capital management and budgeting and financial management by using human capital performance metrics and information to support budget requests, and performance results for financial accountability; (4) assesses the impact of human capital initiatives; (5) promotes, supports, and advocates for strategic human capital management concerns and initiatives; (6) assesses the effectiveness of human capital policies and procedures focused on achieving organizational outcomes and ensuring strategic alignment; (7) provides policy and operational direction to workforce and career development programs across CDC; (8) promotes, supports, and advocates for quality education and training, workforce diversity, policy, and other initiatives needed to develop and maintain a vital public health workforce and a culture of excellence in learning; (9) provides a forum for information exchange among the workforce and career development officers, AHRC, CDC/OD, and other public health workforce development stakeholders; (10) develops and implements administrative policies, procedures, and operations, as appropriate for CDC/ATSDR, and prepares special reports and studies for the CDC/OD; and (11) provides guidance and oversight on the development of policies, procedures and processes associated with agency awards.

Human Capital Planning Branch (CAJQB). (1) Participates with management in program planning, policy determination, evaluations, budget and decisions concerning the division; (2) works with AHRC, Office of the Chief Operating Officer, CDC Excellence in Learning Council, workforce and career development officers, and agency managers to carry out human capital management planning and development activities; (3) establishes, coordinates development and monitors implementation of the human capital accountability system framework for management of the human capital management plan; (4) ensures strategic alignment with OPM's Human Capital Assessment and Accountability Framework and HHS' associated procedures and deliverables; (5) identifies mission-critical occupations and their associated competencies to assess potential "gaps" in occupations and competencies that are essential to CDC achieving its strategic goals; (6) reports progress in meeting human capital management improvement objectives associated with the President's Management Agenda and other related government-wide human capital initiatives; (7) coordinates implementation of a succession plan for key leadership and technical positions with an emphasis on mission-critical occupations; (8) develops an agency-wide strategic hiring plan that includes recruitment and retention strategies to facilitate hiring members of under-represented groups and those with the requisite professional/scientific skills for closing occupational series and/or competency gaps in the workforce; and (9) provides information on Commissioned Corps pay, benefits, performance management, assignments, retirement, etc., to members of the Corps and CDC management, and coordinates the Commissioned Corps promotion and award programs.

Training and Career Development Branch (CAJQC). (1) Plans, directs, implements, supports, and coordinates the activities of the branch; (2) provides agency-wide leadership and guidance in all functional areas related to training and career development; (3) participates with management in program planning, policy determination, evaluations,

budget and decisions; (4) designs, develops, implements and evaluates a comprehensive strategic human resource leadership and career training and development program for all occupational series throughout CDC; (5) develops and implements training strategies and activities that contribute to the agency's mission, goals and objectives; (6) maintains employee training records; (7) maximizes economies of scale through systematic planning and evaluation of agency-wide training initiatives to assist CDC employees in achieving required competencies; (8) develops and validates occupational and functional competencies and develops related training plans; (9) develops and administers intern and professional development programs, the long-term training program, and the mentoring program; (10) administers and monitors the Training and Learning Management System for compliance with the Government Employees Training Act; (11) conducts training needs assessment of CDC employees nationwide and provides analysis and data to correlate individual training with corporate strategic plans; (12) develops and maintains assessment tools to identify core competency requirements for each occupational series throughout the agency; (13) provides consultation, guidance, and technical assistance to managers and employees in organizational development, career management, employee development, and training; (14) develops and delivers education and training programs to meet the identified needs of the public health workforce; (15) promotes, develops, and implements training needs assessment methodology to establish priorities for training interventions; (16) collaborates, as appropriate, with the CDC/OD, other CIOs, HHS, OPM and other domestic and international agencies and organizations; and (17) develops and implements policies related to employee training.

Dated: May 12, 2010.

William P. Nichols,

Chief Operating Officer, Centers for Disease Control and Prevention.

[FR Doc. 2010–12347 Filed 5–21–10; 8:45 am]

BILLING CODE 4163–18–M

DEPARTMENT OF HOUSING AND URBAN DEVELOPMENT

[Docket No. FR–5376–N–41]

Capital Advance Program Submission Requirements for the Section 202 Supportive Housing for the Elderly and the Section 811 Supportive Housing for Persons With Disabilities

AGENCY: Office of the Chief Information Officer, HUD.

ACTION: Notice.

SUMMARY: The proposed information collection requirement described below has been submitted to the Office of Management and Budget (OMB) for review, as required by the Paperwork Reduction Act. The Department is soliciting public comments on the subject proposal.

This collection facilitates the processing of all Sections 202 and 811 capital advance projects from firm commitment through final closing. Second, it allows for the collection of information under the mixed-finance section of this program so that those owners who wish to partner with for-profit limited partners can participate in the development and management of supportive housing. And lastly, it allows for the collection of information to satisfy the reporting requirements for owners who receive predevelopment grant funds.

DATES: *Comments Due Date: June 23, 2010.*

ADDRESSES: Interested persons are invited to submit comments regarding this proposal. Comments should refer to the proposal by name and/or OMB approval Number (2502–0470) and should be sent to: HUD Desk Officer, Office of Management and Budget, New Executive Office Building, Washington, DC 20503; fax: 202–395–5806.

FOR FURTHER INFORMATION CONTACT: Leroy McKinney, Jr., Reports Management Officer, QDAM, Department of Housing and Urban Development, 451 Seventh Street, SW., Washington, DC 20410; e-mail Leroy McKinney, Jr. at *Leroy.McKinneyJr@hud.gov* or telephone (202) 402–5564. This is not a toll-free number. Copies of available documents submitted to OMB may be obtained from Mr. McKinney.

SUPPLEMENTARY INFORMATION: This notice informs the public that the Department of Housing and Urban Development has submitted to OMB a request for approval of the Information collection described below. This notice is soliciting comments from members of the public and affected agencies concerning the proposed collection of information to: (1) Evaluate whether the proposed collection of information is necessary for the proper performance of the functions of the agency, including whether the information will have practical utility; (2) Evaluate the accuracy of the agency's estimate of the burden of the proposed collection of information; (3) Enhance the quality, utility, and clarity of the information to be collected; and (4) Minimize the burden of the collection of information on those who are to respond; including through the use of appropriate automated collection techniques or other forms of information technology, e.g., permitting electronic submission of responses.

This notice also lists the following information:

Title of Proposal: Capital Advance Program Submission Requirements for the Section 202 Supportive Housing for the Elderly and the Section 811 Supportive Housing for Persons With Disabilities.

OMB Approval Number: 2502–0470.

Form Numbers: HUD–: 92013; 92013–Supp; 90169–CA, 91732–A–CA; 90169.A–CA; 92442–CA; 92442–A–CA; 2328; 92457; 51994; 2530; 92434–CA; 92435–CA; 2880; 935.2; 9832; 9839–A; 9839–B; 9839–C; 2453.1–CA; 90179–CA; 90172–A–CA; 90172–B–CA; 90167–CA; 92403–CA; 90164–CA; 92452–A; 92452–A–CA; 92450–CA; 2554; 92466.1–CA; 92466–CA; 90163–CA; 90163.1–CA; 90165–CA; 92443–CA; 92403.1; 90177–CA; 90170–CA; 92464; 92329; 90164–CA; 92264; 90166–CA; 90166–A–CA; 92433–CA; 93566–CA; 93432–CA; 90178–CA; 92485; 92476–A; 92476–A–CA; 92448; 92437; 93479; 93480; 93481; 92458; 90173–A–CA; 90173–B–CA; 90173–C–CA; 92330–A; 92330; 92331; 92580–CA; 90175–CA; 90171–CA; 90176–CA; 92466–CA; 93566–CA; 90175.1–CA; 93566.1–CA; 27054; 50080–CAH, SF–269; SF–1199; SF–LLL; and FM–1006.

Description of the Need for the Information and Its Proposed Use: This collection facilitates the processing of all Sections 202 and 811 capital advance projects from firm commitment through final closing. Second, it allows for the collection of information under the mixed-finance section of this program so that those owners who wish to partner with for-profit limited partners can participate in the development and management of supportive housing. And lastly, it allows for the collection of information to satisfy the reporting requirements for owners who receive predevelopment grant funds.

Frequency of Submission: On occasion, Monthly.

	Number of respondents	Annual responses	×	Hours per response	=	Burden hours
Reporting Burden	260	34.919		0.988		8,973

Total Estimated Burden Hours: 8,973.

Status: Extension of a currently approved collection.

Authority: Section 3507 of the Paperwork Reduction Act of 1995, 44 U.S.C. 35, as amended.

Dated: *May 18, 2010.*

Leroy McKinney, Jr.,

Departmental Reports Management Officer, Office of the Chief Information Officer.

[FR Doc. 2010–12439 Filed 5–21–10; 8:45 am]

BILLING CODE 4210–67–P

DEPARTMENT OF HOUSING AND URBAN DEVELOPMENT

[Docket No. FR–5376–N–43]

Owner of Record and Re-Sale Data To Preclude Predatory Lending Practices (Property Flipping) on FHA Insured Mortgages

AGENCY: Office of the Chief Information Officer, HUD.

ACTION: Notice.

SUMMARY: The proposed information collection requirement described below has been submitted to the Office of Management and Budget (OMB) for review, as required by the Paperwork Reduction Act. The Department is soliciting public comments on the subject proposal.

For all loans for purchase money mortgages, lenders must obtain and submit to HUD documentation that the seller is the owner of record and that the transaction does not involve any sale or assignment of the sales contract. For properties resold within one year of acquisition by the seller (with limited exceptions), or if the sales price exceeds HUD's threshold for an area, additional appraisal requirements may apply. HUD uses the information to ensure that purchasers are not victims of predatory sales or lending practices.

DATES: *Comments Due Date: June 23, 2010.*

ADDRESSES: Interested persons are invited to submit comments regarding this proposal. Comments should refer to the proposal by name and/or OMB approval Number (2502–0547) and should be sent to: HUD Desk Officer, Office of Management and Budget, New Executive Office Building, Washington, DC 20503; *fax:* 202–395–5806.

FOR FURTHER INFORMATION CONTACT: Leroy McKinney, Jr., Reports Management Officer, QDAM, Department of Housing and Urban Development, 451 Seventh Street, SW., Washington, DC 20410; e-mail Leroy McKinney, Jr. at *Leroy.McKinneyJr@hud.gov* or telephone (202) 402–5564. This is not a toll-free number. Copies of available documents submitted to OMB may be obtained from Mr. McKinney.

SUPPLEMENTARY INFORMATION: This notice informs the public that the Department of Housing and Urban Development has submitted to OMB a request for approval of the Information collection described below. This notice is soliciting comments from members of the public and affected agencies concerning the proposed collection of information to: (1) Evaluate whether the proposed collection of information is necessary for the proper performance of the functions of the agency, including whether the information will have practical utility; (2) Evaluate the accuracy of the agency's estimate of the burden of the proposed collection of information; (3) Enhance the quality, utility, and clarity of the information to be collected; and (4) Minimize the burden of the collection of information on those who are to respond; including through the use of appropriate automated collection techniques or other forms of information technology, e.g., permitting electronic submission of responses.

This notice also lists the following information:

Title of Proposal: Owner of Record and Re-sale Data To Preclude Predatory Lending Practices (Property Flipping) on FHA Insured Mortgages.

OMB Approval Number: 2502–0547.

Form Numbers: None.

Description of the Need for the Information and Its Proposed Use: For all loans for purchase money mortgages, lenders must obtain and submit to HUD documentation that the seller is the owner of record and that the transaction does not involve any sale or assignment of the sales contract. For properties resold within one year of acquisition by the seller (with limited exceptions), or if the sales price exceeds HUD's threshold for an area, additional appraisal requirements may apply. HUD uses the information to ensure that purchasers are not victims of predatory sales or lending practices.

Frequency of Submission: On occasion.

	Number of respondents	Annual responses	×	Hours per response	=	Burden hours
Reporting Burden	13,000	88.461		0.0378		43,500

Total Estimated Burden Hours: 43,500.

Status: Revision of a currently approved collection.

Authority: Section 3507 of the Paperwork Reduction Act of 1995, 44 U.S.C. 35, as amended.

Dated: *May 18, 2010.*

Leroy McKinney, Jr.,

Departmental Reports Management Officer, Office of the Chief Information Officer.

[FR Doc. 2010–12449 Filed 5–21–10; 8:45 am]

BILLING CODE 4210–67–P

DEPARTMENT OF HOUSING AND URBAN DEVELOPMENT

[Docket No. FR–5376–N–40]

FHA Lender Approval, Annual Renewal, Periodic Updates and Required Reports From FHA Approved Lenders

AGENCY: Office of the Chief Information Officer, HUD.

ACTION: Notice.

SUMMARY: The proposed information collection requirement described below has been submitted to the Office of Management and Budget (OMB) for review, as required by the Paperwork Reduction Act. The Department is soliciting public comments on the subject proposal.

This information is required for: (1) FHA lender approval, (2) Annual renewal of each FHA lender's approval, (3) Updates to a FHA lender's approval and (4) Various reports from FHA lenders.

DATES: *Comments Due Date:* June 23, 2010.

ADDRESSES: Interested persons are invited to submit comments regarding this proposal. Comments should refer to the proposal by name and/or OMB approval Number (2502–0005) and should be sent to: HUD Desk Officer, Office of Management and Budget, New Executive Office Building, Washington, DC 20503; fax: 202–395–5806.

FOR FURTHER INFORMATION CONTACT: Leroy McKinney, Jr., Reports Management Officer, QDAM, Department of Housing and Urban Development, 451 Seventh Street, SW., Washington, DC 20410; e-mail Leroy McKinney, Jr. at *Leroy.McKinneyJr@hud.gov* or telephone (202) 402–5564. This is not a toll-free number. Copies of available documents submitted to OMB may be obtained from Mr. McKinney.

SUPPLEMENTARY INFORMATION: This notice informs the public that the Department of Housing and Urban Development has submitted to OMB a request for approval of the Information collection described below. This notice is soliciting comments from members of the public and affecting agencies concerning the proposed collection of information to: (1) Evaluate whether the proposed collection of information is necessary for the proper performance of the functions of the agency, including whether the information will have practical utility; (2) Evaluate the accuracy of the agency's estimate of the burden of the proposed collection of information; (3) Enhance the quality, utility, and clarity of the information to be collected; and (4) Minimize the burden of the collection of information on those who are to respond; including through the use of appropriate automated collection techniques or other forms of information technology, *e.g.,* permitting electronic submission of responses.

This notice also lists the following information:

Title of Proposal: FHA Lender Approval, Annual Renewal, Periodic Updates and Required Reports from FHA Approved Lenders.

OMB Approval Number: 2502–0005.

Form Numbers: HUD–92001–A, HUD–92001–B and HUD–92001–C.

Description of the Need for the Information and Its Proposed Use: This information is required for: (1) FHA lender approval, (2) Annual renewal of each FHA lender's approval, (3) Updates to a FHA lender's approval and (4) Various reports from FHA lenders.

Frequency of Submission: On occasion, Annually.

	Number of respondents	Annual responses	×	Hours per response	=	Burden hours
Reporting Burden	4,360	5.004		0.694		15,145

Total Estimated Burden Hours: 15,145.

Status: Revision of a currently approved collection.

Authority: Section 3507 of the Paperwork Reduction Act of 1995, 44 U.S.C. 35, as amended.

Dated: *May 18, 2010.*

Leroy McKinney, Jr.,

Departmental Reports Management Officer, Office of the Chief Information Officer.

[FR Doc. 2010–12442 Filed 5–21–10; 8:45 am]

BILLING CODE 4210–67–P

DEPARTMENT OF HOUSING AND URBAN DEVELOPMENT

[Docket No. FR–5376–N–42]

Application and Re-certification Packages for Approval of Nonprofit Organizations in FHA Activities

AGENCY: Office of the Chief Information Officer, HUD

ACTION: Notice.

SUMMARY: The proposed information collection requirement described below has been submitted to the Office of Management and Budget (OMB) for review, as required by the Paperwork Reduction Act. The Department is soliciting public comments on the subject proposal.

In general, a nonprofit organization must be HUD-approved and meet specific requirements to maintain approval and remain on the Nonprofit Organization Roster (Roster). This includes an application, affordable housing plan, annual reports, and required record keeping. Participants must submit a new application and updated affordable housing plan every two years to remain on the Roster. HUD uses the information to ensure that a nonprofit organization meets the requirements to participate in Single Family programs.

DATES: *Comments Due Date: June 23, 2010.*

ADDRESSES: Interested persons are invited to submit comments regarding this proposal. Comments should refer to the proposal by name and/or OMB approval Number (2502–0540) and should be sent to: HUD Desk Officer, Office of Management and Budget, New Executive Office Building, Washington, DC 20503; fax: 202–395–5806.

FOR FURTHER INFORMATION CONTACT: Leroy McKinney, Jr., Reports Management Officer, QDAM, Department of Housing and Urban Development, 451 Seventh Street, SW., Washington, DC 20410; e-mail Leroy McKinney, Jr. at *Leroy.McKinneyJr@hud.gov* or telephone (202) 402–5564. This is not a toll-free number. Copies of available documents submitted to OMB may be obtained from Mr. McKinney.

SUPPLEMENTARY INFORMATION: This notice informs the public that the Department of Housing and Urban Development has submitted to OMB a request for approval of the Information collection described below. This notice is soliciting comments from members of the public and affecting agencies concerning the proposed collection of information to: (1) Evaluate whether the proposed collection of information is necessary for the proper performance of the functions of the agency, including whether the information will have practical utility; (2) Evaluate the accuracy of the agency's estimate of the burden of the proposed collection of information; (3) Enhance the quality, utility, and clarity of the information to be collected; and (4) Minimize the burden of the collection of information on those who are to respond; including through the use of appropriate automated collection techniques or other forms of information technology,

e.g., permitting electronic submission of responses.

This notice also lists the following information:

Title of Proposal: Application and Re-certification Packages for Approval of Nonprofit Organizations in FHA Activities.

OMB Approval Number: 2502–0540.

Form Numbers: None.

Description of the Need for the Information and Its Proposed Use: In general, a nonprofit organization must be HUD-approved and meet specific requirements to maintain approval and remain on the Nonprofit Organization Roster (Roster).

This includes an application, affordable housing plan, annual reports, and required record keeping. Participants must submit a new application and updated affordable housing plan every two years to remain on the Roster. HUD uses the information to ensure that a nonprofit organization meets the requirements to participate in Single Family programs.

Frequency of Submission: On occasion, Annually, Biennially.

	Number of respondents	Annual responses	×	Hours per response	=	Burden hours
Reporting Burden	355	0.205		0.147		11,760

Total Estimated Burden Hours: 11,760.

Status: Extension of a currently approved collection.

Authority: Section 3507 of the Paperwork Reduction Act of 1995, 44 U.S.C. 35, as amended.

Dated: May 18, 2010.

Leroy McKinney, Jr.,

Departmental Reports Management Officer, Office of the Chief Information Officer.

[FR Doc. 2010–12435 Filed 5–21–10; 8:45 am]

BILLING CODE 4210–67–P

DEPARTMENT OF THE INTERIOR

Bureau of Land Management

[F–22588, F–22603; LLAK–962000–L14100000–HY0000–P]

Alaska Native Claims Selection

AGENCY: Bureau of Land Management, Interior.

ACTION: Notice of decision approving lands for conveyance.

SUMMARY: As required by 43 CFR 2650.7(d), notice is hereby given that the Bureau of Land Management (BLM) will issue an appealable decision approving the conveyance of surface and subsurface estates for certain lands to Doyon, Limited, pursuant to the Alaska Native Claims Settlement Act. The lands are located north of Fort Yukon, Alaska, aggregating 184.61 acres. Notice of the decision will also be published four times in the Fairbanks Daily News-Miner.

DATES: The time limits for filing an appeal are:

1. Any party claiming a property interest which is adversely affected by the decision shall have until June 23, 2010 to file an appeal.

2. Parties receiving service of the decision by certified mail shall have 30 days from the date of receipt to file an appeal.

Parties who do not file an appeal in accordance with the requirements of 43 CFR part 4, subpart E, shall be deemed to have waived their rights.

ADDRESSES: A copy of the decision may be obtained from: Bureau of Land Management, Alaska State Office, 222 West Seventh Avenue, #13, Anchorage, Alaska 99513–7504.

FOR FURTHER INFORMATION CONTACT: The BLM by phone at 907–271–5960, or by e-mail at *ak.blm.conveyance@ak.blm.gov.* Persons who use a telecommunication device (TTD) may contact the BLM by calling the Federal Information Relay Service (FIRS) at 1–800–877–8339, 24 hours a day, 7 days a week.

Dina L. Torres,

Land Transfer Resolution Specialist, Branch of Preparation and Resolution.

[FR Doc. 2010–12339 Filed 5–21–10; 8:45 am]

BILLING CODE 4310–JA–P

DEPARTMENT OF THE INTERIOR

Fish and Wildlife Service

[FWS–R1–R–2009–N221; 10137–1265–0000 S3]

Guam National Wildlife Refuge, Yigo, Guam

AGENCY: Fish and Wildlife Service, Interior.

ACTION: Notice of availability of comprehensive conservation plan and finding of no significant impact.

SUMMARY: We, the U.S. Fish and Wildlife Service (Service), announce the availability of our final comprehensive conservation plan (CCP) and finding of no significant impact (FONSI) for the Guam National Wildlife Refuge (Refuge). In the final CCP, we describe how we will manage this Refuge for the next 15 years.

ADDRESSES: You may view or obtain copies of the final CCP/FONSI by any of the following methods. You may request either a hard copy or CD–ROM.

Agency Web Site: Review or download a copy of the document at *http://www.fws.gov/pacific/planning/.*

E-mail: Joseph_Schwagerl@fws.gov. Include "Guam Refuge CCP" in the subject line of the message.

Mail: Guam National Wildlife Refuge, Route 3A, Spur Road, Yigo, Guam 96929.

In-Person Viewing or Pickup: Call (671) 355–5096 to make an appointment during regular business hours at the Refuge office.

FOR FURTHER INFORMATION CONTACT: Joseph Schwagerl at (671) 355–5096 or *Joseph_Schwagerl@fws.gov.*

SUPPLEMENTARY INFORMATION:

Introduction

With this notice, we finalize the CCP process for the Guam Refuge. We started this process through a notice of intent in the **Federal Register** (72 FR 37037, July 6, 2007). We released the Draft CCP and environmental assessment (EA) to the public, announcing and requesting comments in a notice of availability in the **Federal Register** (74 FR 36249, July 22, 2009).

The Guam Refuge is located on the unincorporated U.S. territory of Guam. Guam is the largest and southernmost island in the Marianas archipelago, situated in the western Pacific Ocean approximately 3,800 miles west of Honolulu, Hawaii, and 1,500 miles south of Tokyo, Japan. The Refuge is comprised of three units: the Andersen Air Force Base Overlay Refuge Unit, the Navy Overlay Refuge Unit, and the Ritidian Unit. The Ritidian Unit, the focus of this CCP, is located on the northern tip of Guam and encompasses 1,217 acres, including 385 terrestrial acres and 832 acres of submerged offshore area. Management planning for the overlay units is being addressed in Integrated Natural Resource Management Plans (INRMP). Planning

for the INRMPs is being conducted by the Units' respective military branches.

We completed the CCP/FONSI in accordance with National Environmental Policy Act (NEPA) (40 CFR 1506.6(b)) requirements. We completed a thorough analysis of impacts on the human environment, which we included in the Draft CCP/EA. The CCP will guide us in managing and administering the Refuge for the next 15 years. Alternative B, as we described in the Draft CCP, is the foundation for the Final CCP with one modification.

Background

The National Wildlife Refuge System Administration Act of 1966 (16 U.S.C. 668dd–668ee) (Administration Act), as amended by the National Wildlife Refuge System Improvement Act of 1997, requires us to develop a CCP for each National Wildlife Refuge. The purpose for developing a CCP is to provide refuge managers with a 15-year direction for achieving refuge purposes and contributing toward the mission of the National Wildlife Refuge System, consistent with sound principles of fish and wildlife management, conservation, legal mandates, and our policies. In addition to outlining broad management direction on conserving wildlife and their habitats, CCPs identify compatible wildlife-dependent recreational opportunities available to the public, including opportunities for hunting, fishing, wildlife observation and photography, and environmental education and interpretation. We will review and update the CCP at least every 15 years in accordance with the Administration Act.

CCP Alternatives, Including the Selected Alternative

We addressed several issues in our Draft CCP/EA by developing and evaluating the following alternatives:

Alternative A, Current Management	This is the no-action or no-change Alternative. It serves as a baseline from which to compare the other alternatives.
Alternative B (Preferred Alternative), Full Habitat and Species Enhancement.	This alternative would generate an intense, short-term increase in wildlife and habitat management activities.
Alternative C, Habitat Enhancement and Public Use Restrictions.	This alternative provides for a modest increase in wildlife and habitat management.

Comments

We solicited comments on the Draft CCP/EA from July 22, 2009, to August 24, 2009. We received 15 responses on the Draft CCP/EA.

Selected Alternative

After considering the comments we received, we have selected Alternative B for the CCP. Implementing the CCP will encompass the following actions, subject to the availability of funding and any additional compliance requirements.

- We will construct a predator-proof barrier to address habitat damage issues, as well as impacts to threatened and endangered species.
- In conjunction with barrier construction, the Refuge will initiate an intensive program to reduce non-native pest species.
- The Refuge will work with staff from the Guam Department of Agriculture to develop a soft-release site and release program for captive-reared bird species.
- We will implement habitat restoration as planned in the CCP.
- We will increase the public-use program, including adding interpretive opportunities, such as a short interpretive trail, and increasing outreach and off-site environmental education possibilities.
- Increasing protection for the Refuge's cultural resources will also occur under the CCP.

Dated: May 3, 2010.

Carolyn A. Bohan,

Regional Director, Region 1, Portland, Oregon.

[FR Doc. 2010–12438 Filed 5–21–10; 8:45 am]

BILLING CODE 4310–55–P

DEPARTMENT OF THE INTERIOR

National Park Service

National Register of Historic Places; Notification of Pending Nominations and Related Actions

Nominations for the following properties being considered for listing or related actions in the National Register were received by the National Park Service before April 23, 2010. Pursuant to section 60.13 of 36 CFR part 60, written comments are being accepted concerning the significance of the nominated properties under the National Register criteria for evaluation. Comments are also being accepted on the following properties being considered for removal pursuant to 36 CFR 60.15. Comments may be forwarded by United States Postal Service, to the National Register of Historic Places, National Park Service, 1849 C St., NW., 2280, Washington, DC 20240; by all other carriers, National Register of Historic Places, National Park Service,1201 Eye St., NW., 8th floor, Washington DC 20005; or by fax, 202–371–6447. Written or faxed comments should be submitted by June 8, 2010.

Before including your address, phone number, e-mail address, or other personal identifying information in your comment, you should be aware that your entire comment—including your personal identifying information—may be made publicly available at any time. While you can ask us in your comment to withhold your personal identifying information from public review, we cannot guarantee that we will be able to do so.

J. Paul Loether,

Chief, National Register of Historic Places/National Historic Landmarks Program.

ILLINOIS

Cook County

Sauganash Historic District, Roughly bounded by Lemont and Keating Aves, Chicago and Northwestern Railway, and the alley to the east of Kilbourn Ave, Chicago, 10000310

Union Park Hotel, 1519–1521 W Warren Blvd, Chicago, 10000309

West Argyle Street Historic District, Roughly bounded by N Sheridan Rd, W Ainslie St, N Broadway, and W Winona St, Chicago, 10000311

Kane County

St. Charles Hospital, 400 E New York St, Aurora, 10000312

MISSOURI

Montgomery County

McKittrick Farmers Mercantile, 500 Washington St, McKittrick, 10000313

NORTH CAROLINA

Johnston County

Clayton Historic District, Bounded by Mulberry St, W Barnes St, Mill St, S Lombard St, Blanch St, Clayton, 10000314

OHIO

Cuyahoga County

Baldwin-Wallace College South Campus Historic District, Seminary St between School and Church Front to Beach, variable W/E boundary, Berea, 10000315

SOUTH CAROLINA

Greenville County

Quillen, Robert, Office and Library, 200 N Main St, Greenville, 10000316

Spartanburg County

Davis, James M., House, 2763 Old Hwy 14 S, Pelham, 10000317

WISCONSIN

Columbia County

Bellack, Albert M. and Alice, House, 628 W James St, Columbus, 10000318

Schendel, Reinhard and Amelia, House, 211 N Ludington St, Columbus, 10000319

[FR Doc. 2010–12338 Filed 5–21–10; 8:45 am]

BILLING CODE P

DEPARTMENT OF THE INTERIOR

Bureau of Land Management

[LLWYD10000.L14300000.EU0000; WYW–161972; WYW–176935]

Notice of Realty Action: Proposed Sale of Public Land, Wyoming

AGENCY: Bureau of Land Management, Interior.

ACTION: Notice of Realty Action.

SUMMARY: The Bureau of Land Management (BLM) has examined and found the following public lands located in Teton County, Wyoming, suitable for direct (non-competitive) sale under Section 203 of the Federal Land Policy and Management Act of 1976 (FLPMA) at not less than the fair market value, to resolve an unintentional unauthorized use of public lands.

DATES: Comments regarding the proposed sale must be received by the BLM at the address below not later than July 8, 2010.

ADDRESSES: Send all written comments concerning this proposed sale to the Field Manager, Bureau of Land Management, Pinedale Field Office, PO Box 768, Pinedale, Wyoming 82941. Comments received in electronic form, such as e-mail or facsimile, will not be considered.

FOR FURTHER INFORMATION CONTACT: Bill Wadsworth, Realty Specialist, BLM, Pinedale Field Office, at the above address or at 307–367–5341.

SUPPLEMENTARY INFORMATION: The following-described public land in Teton County, Wyoming, is being considered for direct (non-competitive) sale under the authority of Section 203 of the FLPMA (90 Stat. 2750, 43 U.S.C. 1713):

Sixth Principal Meridian

T. 40 N., R. 116 W.,
Sec 34, lot 14.
T. 40 N., R. 117 W.,
Sec 25, lot 14.
The area described contains 0.95 acres, more or less, in Teton County.

The proposed direct sale is consistent with the objectives, goals and decision of the BLM Snake River Resource Management Plan dated April 5, 2004, and the land is not required for other Federal purposes. The direct sale of these lands to the adjacent landowners will resolve an unintentional, unauthorized occupancy of public land managed by the BLM including residences and agricultural buildings. In accordance with 43 CFR 2710.0–6(c)(3)(iii) and 43 CFR 2711.3–3(a), direct sale procedures are appropriate to resolve an inadvertent unauthorized occupancy of the land or to protect existing equities in the land. The sale, when completed, would protect the improvements involved and resolve the inadvertent encroachment. The parcel is the minimum size possible to ensure that all the improvements are included.

The BLM Snake River Resource Management Plan identified these lands suitable for disposal. The lands contain no other known public values.

Conveyance of the identified public land will be subject to valid existing rights and encumbrances of record, including but not limited to, rights-of-way for roads and public utilities. The patent will include a notice and indemnification statement under the Comprehensive Environmental Response Compensation and Liability Act. The parcel is subject to the requirements of Section 120(h) (42 U.S.C. Section 9620) holding the United States harmless from any release of hazardous materials that may have occurred as a result of the unauthorized use of the property by other parties. No warranty of any kind, express or implied, is given by the United States as to the title, physical condition or potential uses of the parcel of land proposed for sale. The BLM intends to retain all mineral rights.

Upon publication of this notice in the **Federal Register,** the lands will be segregated from all other forms of appropriation under the public land laws, including the general mining laws, except for conveyance under the FLPMA and leasing under the mineral leasing laws. Until completion of the sale, the BLM is no longer accepting land use applications affecting the identified public land, except applications for the amendment of previously-filed rights-of-way applications or existing authorizations to increase the term of the grants in accordance with 43 CFR 2807.15 and 2886.15. The segregative effect will end upon issuance of the patent, publication in the **Federal Register** of a termination of the segregation, or May 24, 2012, unless extended by the BLM State Director in accordance with 43 CFR 2711.1–2(d) prior to the termination date.

For a period until July 8, 2010, the general public and interested parties may submit written comments concerning the land being considered for sale, including notification of any encumbrances or other claims relating to the identified land, to the BLM Field Manager at the above address.

Detailed information concerning this action is available for review at the Bureau of Land Management, Pinedale Field Office, 1625 West Pine Street, Pinedale, Wyoming 82941.

Before including your address, phone number, e-mail address, or other personal identifying information in your comment, be advised that your entire comment—including your personal identifying information—may be publicly available at any time. While you can ask us in your comment to withhold from public review your personal identifying information, we cannot guarantee that we will be able to do so.

Any adverse comments will be reviewed by the BLM State Director, who may sustain, vacate, or modify this realty action. In the absence of timely filed objections, this realty action will become the final determination of the Department of the Interior.

Authority: 43 CFR 2711.1–2.

Brian Davis,

Acting Field Manager.

[FR Doc. 2010–12340 Filed 5–21–10; 8:45 am]

BILLING CODE 4310–22–P

DEPARTMENT OF JUSTICE

[OMB Number 1122–0017]

Office on Violence Against Women; Agency Information Collection Activities: Extension of a Currently Approved Collection

ACTION: 60-day notice of information collection under review: Semi-annual Progress Report for the Technical Assistance Program.

The Department of Justice, Office on Violence Against Women (OVW) will be submitting the following information collection request to the Office of Management and Budget (OMB) for review and approval in accordance with the Paperwork Reduction Act of 1995. Comments are encouraged and will be accepted for "sixty days" until July 23, 2010. This process is conducted in accordance with 5 CFR 1320.10.

Written comments and/or suggestions regarding the items contained in this notice, especially the estimated public burden and associated response time, should be directed to The Office of Management and Budget, Office of Information and Regulatory Affairs, Attention Department of Justice Desk Officer, Washington, DC 20503. Additionally, comments may be submitted to OMB via facsimile to (202) 395–5806.

Written comments and suggestions from the public and affected agencies concerning the proposed collection of information are encouraged. Your comments should address one or more of the following four points:

(1) Evaluate whether the proposed collection of information is necessary for the proper performance of the functions of the agency, including whether the information will have practical utility;

(2) Evaluate the accuracy of the agency's estimate of the burden of the proposed collection of information, including the validity of the methodology and assumptions used;

(3) Enhance the quality, utility, and clarity of the information to be collected; and

(4) Minimize the burden of the collection of information on those who are to respond, including through the use of appropriate automated, electronic, mechanical, or other technological collection techniques or other forms of information technology, *e.g.,* permitting electronic submission of responses.

Overview of This Information Collection

(1) *Type of Information Collection:* Extension of a currently approved collection.

(2) *Title of the Form/Collection:* Semi-annual Progress Report for the Technical Assistance Program.

(3) *Agency form number, if any, and the applicable component of the Department of Justice sponsoring the collection: Form Number:* 1122–0017. U.S. Department of Justice, Office on Violence Against Women.

(4) *Affected public who will be asked or required to respond, as well as a brief abstract:* The affected public includes the 100 programs providing technical assistance as recipients under the Technical Assistance Program.

(5) *An estimate of the total number of respondents and the amount of time estimated for an average respondent to respond/reply:* It is estimated that it will take the 100 respondents (Technical Assistance providers) approximately one hour to complete a semi-annual progress report twice a year. The semi-annual progress report for the Technical Assistance Program is divided into sections that pertain to the different types of activities in which Technical Assistance Providers are engaged.

The primary purpose of the OVW Technical Assistance Program is to provide direct assistance to grantees and their subgrantees to enhance the success of local projects they are implementing with VAWA grant funds. In addition, OVW is focused on building the capacity of criminal justice and victim services organizations to respond effectively to sexual assault, domestic violence, dating violence, and stalking and to foster partnerships between organizations that have not traditionally worked together to address violence against women, such as faith- and community-based organizations.

(6) *An estimate of the total public burden (in hours) associated with the collection:* The total annual hour burden to complete the semi-annual progress report form is 200 hours. It will take approximately one hour for the grantees to complete the form twice a year.

If additional information is required contact: Lynn Bryant, Department Clearance Officer, United States Department of Justice, Justice Management Division, Policy and Planning Staff, Suite 1600, Patrick Henry Building, 601 D Street, NW., Washington, DC 20530.

Dated: May 19, 2010.

Lynn Bryant,

Department Clearance Officer, PRA, United States Department of Justice.

[FR Doc. 2010–12420 Filed 5–21–10; 8:45 am]

BILLING CODE 4410–FX–P

DEPARTMENT OF JUSTICE

Notice of Lodging of a Consent Decree Under CERCLA

Notice is hereby given that on May 4, 2010, a proposed Consent Decree in *United States* v. *AK Steel et al.,* Civil Action No. 10–cv–996 was lodged with the United States District Court for the Northern District of Ohio.

In this action, the United States alleges that Defendants are liable under Sections 106, 107 and 113(g)(2) of the Comprehensive Environmental Response, Compensation, and Liability Act of 1980, as amended ("CERCLA"), 42 U.S.C. 9606, 9607 and 9613(g)(2), for implementation of remedial action and recovery of response costs incurred and to be incurred by the United States at the Chemical Recovery Systems Superfund Alternative Site in Elyria, Ohio. Under the proposed Consent Decree, the Defendants have agreed to: (1) Implement injunctive measures at an estimated cost of $2.1 million in order to remediate contaminated soil and groundwater; (2) implement institutional controls; (3) reimburse the United States $475,000 in past response costs; and (4) reimburse the United States for its future response costs.

The Department of Justice will receive for a period of thirty (30) days from the date of this publication comments relating to the proposed Consent Decree. Comments should be addressed to the Assistant Attorney General, Environment and Natural Resources Division, and either e-mailed to *pubcomment-ees.enrd@usdoj.gov* or mailed to P.O. Box 7611, U.S. Department of Justice, Washington, DC 20044–7611, and should refer to *United States* v. *AK Steel et al.,* D.J. Ref. 90–11–3–09505.

The proposed Consent Decree may be examined at the Office of the United States Attorney, Northern District of Ohio, 801 West Superior Avenue, Suite 400, Cleveland, OH 44113 (contact Assistant United States Attorney Steven J. Paffilas (216) 622–3698), and at U.S. Environmental Protection Agency, Region 5, 77 West Jackson Boulevard, Chicago, IL 60604–3590 (contact Associate Regional Counsel Tom Nash (312) 886–0552). During the public comment period, the proposed Consent Decree may also be examined on the following Department of Justice Web site, *http://www.usdoj.gov/enrd/Consent_Decrees.html.* A copy of the proposed Consent Decree may also be obtained by mail from the Consent Decree Library, P.O. Box 7611, U.S. Department of Justice, Washington, DC 20044–7611 or by faxing or e-mailing a request to Tonia Fleetwood (*tonia.fleetwood@usdoj.gov*), fax no. (202) 514–0097, phone confirmation number (202) 514–1547. In requesting a copy from the Consent Decree Library, please enclose a check in the amount of $60.75 for a copy of the Consent Decree including all attachments or $26.00 for a copy of the Consent Decree only (25 cents per page reproduction cost) payable to the U.S. Treasury or, if by e-mail or fax, forward a check in that

amount to the Consent Decree Library at the stated address.

Maureen Katz,

Assistant Chief, Environmental Enforcement Section, Environment and Natural Resources Division.

[FR Doc. 2010–12321 Filed 5–21–10; 8:45 am]

BILLING CODE 4410–15–P

DEPARTMENT OF JUSTICE

Notice of Lodging of Consent Decree Under the Comprehensive Environmental Response, Compensation and Liability Act

Notice is hereby given that on May 10, 2010, a proposed Consent Decree (the "Decree") in *United States* v. *Precious Metals, Inc.,* Civil Action No. 1:10–cv–02387 (JEI–AMD), was lodged with the United States District Court for the District of New Jersey.

In a complaint, filed simultaneously with the Decree, the United States alleges that Precious Metals, Inc. is liable pursuant to Section 107(a)(3) of the Comprehensive Environmental Response, Compensation and Liability Act ("CERCLA"), 42 U.S.C. 9607(a)(3), for response costs incurred by the Environmental Protection Agency ("EPA") in cleaning up the Pioneer Smelting Superfund Site located at Factory Road, Route 532, in Chatsworth, New Jersey.

Pursuant to the Decree, Precious Metals will make an initial payment of $70,000 and then a contingency payment not to exceed $80,000. The exact amount of the contingency payment will be based on Precious Metals, Inc. financial capabilities three months after the Consent Decree has been entered by the Court. The payments will resolve any claim the United States has against Precious Metals, Inc. associated with costs incurred by EPA at the Pioneer Smelting Superfund Site.

The Department of Justice will receive, for a period of thirty (30) days from the date of this publication, comments relating to the Decree. Comments should be addressed to the Assistant Attorney General, Environment and Natural Resources Division, and either e-mailed to *pubcomment-ees.enrd@usdoj.gov* or mailed to P.O. Box 7611, U.S. Department of Justice, Washington, DC 20044–7611, and should refer to *United States* v. *Precious Metals, Inc.,* D.J. Ref. 90–11–2–09344/2.

During the public comment period, the Decree may be examined on the following Department of Justice Web site, *http://www.usdoj.gov/enrd/Consent_Decrees.html.* A copy of the Decree may also be obtained by mail from the Consent Decree Library, P.O. Box 7611, U.S. Department of Justice, Washington, DC 20044–7611 or by faxing or e-mailing a request to Tonia Fleetwood (*tonia.fleetwood@usdoj.gov*), fax no. (202) 514–0097, phone confirmation number (202) 514–1547. In requesting a copy from the Consent Decree Library, please enclose a check in the amount of $7.75 (25 cents per page reproduction cost) payable to the U.S. Treasury or, if by e-mail or fax, forward a check in that amount to the Consent Decree Library at the stated address.

Maureen Katz,

Assistant Section Chief, Environmental Enforcement Section, Environment and Natural Resources Division.

[FR Doc. 2010–12325 Filed 5–21–10; 8:45 am]

BILLING CODE 4410–CW–P

DEPARTMENT OF JUSTICE

Notice of Lodging of Consent Decree Under the Resource Conservation and Recovery Act

Notice is hereby given that on May 17, 2010, a proposed consent decree in *United States* v. *Tanana Oil Corp., et al.,* Civil Action No. 05–2540, was lodged with the United States District Court for the District of Maryland.

In this action the United States asked the court to order Tri-Angle Holding Company to clean up petroleum products that the United States alleges leaked from underground storage tanks owned or operated by the defendants at Tanana Oil Station #409, formerly located at 7526 North Point Road, Edgemere, Maryland. The United States also sought civil penalties from the defendants for violating regulations regarding underground storage tanks and for failing to comply with an administrative order requiring defendants to clean up the leaked petroleum products. The United States obtained default judgment on April 16, 2006, ordering Tri-Angle Holding Company to clean up the petroleum contamination and ordering the defendants to pay $760,000 in civil penalties. If approved, the consent decree would replace the default judgment and would require two individuals, not previously named as defendants in this matter, to perform the cleanup work in accordance with a corrective action plan attached to the consent decree and to pay a civil penalty of $69,000 in two installments.

The Department of Justice will receive for a period of thirty (30) days from the date of this publication comments relating to the consent decree. Comments should be addressed to the Assistant Attorney General, Environment and Natural Resources Division, and either e-mailed to *pubcomment-ees.enrd@usdoj.gov* or mailed to P.O. Box 7611, U.S. Department of Justice, Washington, DC 20044–7611, and should refer to *United States* v. *Tanana Oil Company,* D.J. Ref. 90–7–1–08585/1.

The consent decree may be examined at U.S. EPA Region 3, 1650 Arch Street, Philadelphia, Pennsylvania. During the public comment period, the consent decree, may also be examined on the following Department of Justice Web site, *http://www.usdoj.gov/enrd/Consent_Decrees.html.* A copy of the consent decree may also be obtained by mail from the Consent Decree Library, P.O. Box 7611, U.S. Department of Justice, Washington, DC 20044–7611 or by faxing or e-mailing a request to Tonia Fleetwood (*tonia.fleetwood@usdoj.gov*), fax no. (202) 514–0097, phone confirmation number (202) 514–1547. In requesting a copy from the Consent Decree Library, please enclose a check in the amount of $13.25 (25 cents per page reproduction cost) payable to the U.S. Treasury or, if by e-mail or fax, forward a check in that amount to the Consent Decree Library at the stated address.

Maureen Katz,

Assistant Chief, Environmental Enforcement Section, Environment and Natural Resources Division.

[FR Doc. 2010–12318 Filed 5–21–10; 8:45 am]

BILLING CODE 4410–15–P

DEPARTMENT OF JUSTICE

Notice of Public Meeting by Teleconference Concerning Heavy Duty Diesel Engine Consent Decrees

The Department of Justice and the Environmental Protection Agency will hold a public meeting on June 14, 2010 at 3 p.m. by telephone conference. The subject of the meeting will be implementation of the provisions of the seven consent decrees signed by the United States and diesel engine manufacturers and entered by the United States District Court for the District of Columbia on July 1, 1999 (*United States* v. *Caterpillar,* Case No. 1:98CV02544; *United States* v. *Navistar International Transportation Corporation,* Case No. 1:98CV02545; *United States* v. *Cummins Engine Company,* Case No. 1:98CV02546; *United States* v. *Detroit Diesel Corporation,* Case No. 1:98CV02548;

United States v. *Volvo Truck Corporation,* Case No. 1:98CV02547; *United States* v. *Mack Trucks, Inc.,* Case No. 1:98CV01495; and *United States* v. *Renault Vehicles Industries, S.A.,* Case No. 1:98CV02543). In supporting entry by the court of the decrees, the United States committed to meet with states, industry groups, environmental groups, and concerned citizens to discuss consent decree implementation issues. This is the fourteenth public meeting. It is anticipated that this will be the last such meeting. The United States has received, or anticipates receiving, requests from the diesel engine manufacturers for termination of their respective decrees. This meeting notice is also available on EPA's Diesel Engine Settlement Web site at *http://www.epa.gov/compliance/resources/cases/civil/caa/diesel/index.html.*

Interested parties should contact the Environmental Protection Agency at the address listed below prior to the meeting to reserve a telephone line and receive instructions for the call.

Agenda

1. Panel Remarks—3 p.m.
   Remarks by DOJ and EPA regarding the completion of the terms of the consent decrees and the termination process.
2. Public comments and questions
   Adjourn—4 p.m.

FOR FURTHER INFORMATION CONTACT: Anne Wick, EPA Diesel Engine Consent Decree Coordinator, U.S. Environmental Protection Agency (Mail Code 2242A), 1200 Pennsylvania Avenue, NW., Washington, DC 20460, *e-mail: wick.anne@epa.gov.*

Maureen Katz,

Assistant Chief, Environment & Natural Resources Division, Environmental Enforcement Section.

[FR Doc. 2010–12324 Filed 5–21–10; 8:45 am]

BILLING CODE 4410–15–P

NATIONAL AERONAUTICS AND SPACE ADMINISTRATION

[Notice (10–060)]

NASA Advisory Council; Commercial Space Committee; Meeting

AGENCY: National Aeronautics and Space Administration.

ACTION: Notice of meeting.

SUMMARY: In accordance with the Federal Advisory Committee Act, Public Law 92–463, as amended, the National Aeronautics and Space Administration announces a meeting of the Commercial Space Committee of the NASA Advisory Council.

DATES: Thursday, June 17, 2010, 1 p.m.–4 p.m., EDST.

ADDRESSES: NASA Headquarters, 300 E Street, SW., MIC 3–A/3H46–A, Washington, DC 20546.

FOR FURTHER INFORMATION CONTACT: Mr. John Emond, Innovative Partnerships Program, Office of Chief Technologist, National Aeronautics and Space Administration, Washington, DC 20546. Phone 202–358–1686, fax: 202–358–3878, *john.l.emond@nasa.gov.*

SUPPLEMENTARY INFORMATION: The meeting will be a deliberation by the committee on commercial crew and commercial cargo development, incorporating in the deliberation the presentations the committee received over the past three committee meetings. The meeting will be open to the public up to the seating capacity of the room. It is imperative that the meeting be held on this date to accommodate the scheduling priorities of the key participants. Visitors will need to show a valid picture identification such as a driver's license to enter the NASA Headquarters building (West Lobby—Visitor Control Center), and must state that they are attending the NASA Advisory Council Commercial Space Committee meeting in MIC3. All non-U.S citizens must fax a copy of their passport, and print or type their name, current address, citizenship, company affiliation (if applicable) to include address, telephone number, and their title, place of birth, date of birth, U.S. visa information to include type, number, and expiration date, U.S. Social Security Number (if applicable), and place and date of entry into the U.S. fax to John Emond, NASA Advisory Council, Commercial Space Committee Executive Secretary, *Fax:* (202) 358–3878, by no later than Thursday June 10, 2010. To expedite admittance, attendees with U.S. citizenship can provide identifying information 3 working days in advance by contacting John Emond via e-mail at *john.l.emond@nasa.gov* or by telephone at (202) 358–1686 or *fax:* (202) 358–3878.

Dated: May 18, 2010.

P. Diane Rausch,

Advisory Committee Management Officer, National Aeronautics and Space Administration.

[FR Doc. 2010–12315 Filed 5–21–10; 8:45 am]

BILLING CODE P

NATIONAL SCIENCE FOUNDATION

Advisory Panel for Integrative Activities, #1373; Notice of Meeting

In accordance with the Federal Advisory Committee Act (Pub. L. 92–463, as amended), the National Science Foundation announces the following meeting.

Name: Major Research Infrastructure (MRI) Committee of Visitors Meeting.

Date/Time: June 10–11, 2010, 8 a.m.–5 p.m.

Place: National Science Foundation, Stafford II, Room 515, Arlington, VA.

Type of Meeting: Partially-closed.

Contact Person: Craig Henderson, Staff Associate, Office of Integrative Activities, National Science Foundation, Telephone (703) 292–8040.

Purpose of Meeting: To carry out Committee of Visitors (COV) review, including examination of decisions on proposals, reviewer comments, and other privileged materials.

Agenda:

June 10, 2010, 8 a.m.–10 a.m. Open Session
Welcome and introduction of COV Members and present the overview of the MRI Program to the members.

June 10, 2010, 10 a.m.–5 p.m. and June 11, 2010, 8 a.m.–5 p.m. Closed Session
Review and evaluate the Major Research Instrumentation Program and provide assessment of program level technical and managerial matters pertaining to proposal decisions and program operations.

Reason for Closing: Sessions of the meeting are closed to the public because the Committee is reviewing proposal actions that will include confidential commercial information and/or privileged intellectual property disclosure of which could harm the submitters' commercial interests, and personal information disclosure of which could invade individuals' personal privacy. If discussions were open to the public, these matters that are exempt under 5 U.S.C. 552b(c), (4) and (6) of the Government in the Sunshine Act would be improperly disclosed.

Dated: May 18, 2010.

Susanne Bolton,

Committee Management Officer.

[FR Doc. 2010–12330 Filed 5–21–10; 8:45 am]

BILLING CODE 7555–01–P

NUCLEAR REGULATORY COMMISSION

[Docket Nos.: 52–018 and 52–019; NRC–2008–0170]

Duke Energy Carolina, LLC; William States Lee III Combined License Application; Notice of Intent To Conduct a Supplemental Scoping Process for the Supplement to the Environmental Report

Duke Energy Carolinas, LLC (Duke) submitted an application for combined licenses (COL) for its William States Lee III Nuclear Station (Lee) site to build Units 1 and 2, located in the eastern portion of Cherokee County, South Carolina, approximately 7.5 miles southeast of Gaffney, South Carolina. The application for the COL, including an environmental report (ER), was submitted by letter dated December 12, 2007, pursuant to the requirements of Title 10 of the Code of Federal Regulations (10 CFR) part 52. A notice of intent to prepare an environmental impact statement (EIS) in support of the review of the COL application and to conduct scoping was published in the **Federal Register** on March 20, 2008 (73 FR 15009). Duke submitted a supplement to its ER by letter dated September 24, 2009, which describes Duke's plans to construct an additional source of supplemental water to be designated as Make-Up Pond C.

The U.S. Nuclear Regulatory Commission (NRC) is the lead agency in preparing the EIS and the U.S. Army Corps of Engineers (USACE) is a cooperating agency, as described in the Memorandum of Understanding established with the NRC and USACE (ML082540354) and in NRC's response to the USACE's request to become a cooperating agency (ML090700384).

The purpose of this notice is to inform the public that the NRC and the USACE are providing the public an additional opportunity to participate in the environmental scoping process, as described in 10 CFR 51.29, pertaining to the addition of Make-Up Pond C. The supplemental scoping opportunity affords the public an occasion to provide comments concerning the supplemental information that was not available during the initial scoping process in 2008 (73 FR 15009).

In accordance with 10 CFR 51.45 and 51.50, Duke submitted a supplement to its ER as part of its COL application. The supplement to the ER is available for public inspection at the NRC Public Document Room (PDR), located at One White Flint North, 11555 Rockville Pike (first floor), Rockville, Maryland, or from the Publicly Available Records component of the NRC's Agencywide Documents Access and Management System (ADAMS). ADAMS is accessible at *http://www.nrc.gov/reading-rm/adams.html,* which provides access through the NRC's Electronic Reading Room (ERR) link. The ADAMS accession number for the supplement to the ER, submitted by letter dated September 24, 2009, is ML092810257. Persons who do not have access to ADAMS or who encounter problems in accessing the documents located in ADAMS should contact the NRC's PDR Reference staff at 1–800–397–4209 or 301–415–4737, or by sending an e-mail to *pdr.resource@nrc.gov*. The supplement to the ER may also be viewed on the Internet at *http://www.nrc.gov/reactors/new-licensing/col/lee.html.* In addition, the Cherokee County Public Library, 300 E. Rutledge Avenue, Gaffney, South Carolina 29340, has agreed to make the supplement to the ER available for public inspection.

This notice advises the public that the NRC and USACE intend to gather information pertaining to the supplement to the ER and to include this information in the EIS to be prepared in support of the review of the Duke COL application. Possible alternatives to the proposed action (issuance of the COL at the Lee site) include no action and consideration of alternative sites. As set forth in 10 CFR 51.20(b)(2), the issuance of a COL under Part 52 is an action that requires an EIS. This notice is being published in accordance with the National Environmental Policy Act of 1969, as amended, (NEPA) and NRC regulations found in 10 CFR Part 51.

The NRC and USACE will first conduct a scoping process on the supplement to the ER, and, as soon as practicable thereafter, will prepare a draft EIS in support of the review of the Duke COL application for public comment. Participation in the supplemental scoping process by members of the public and local State, Tribal, and Federal government agencies is encouraged. The supplemental scoping opportunity will be used to accomplish the following:

a. Determine how the supplemental information on Make-Up Pond C impacts the scope of the EIS and identify the significant issues regarding Make-Up Pond C to be analyzed in depth;

b. Identify and eliminate from detailed study those issues that are peripheral or that are not significant as they pertain to Make-Up Pond C;

c. Identify any environmental assessments and other EISs that are being or will be prepared that are related to the supplemental information on Make-Up Pond C, but are not part of the scope of the EIS being considered;

d. Identify other environmental review and consultation requirements related to the supplemental information on Make-Up Pond C and the USACE;

e. Identify parties consulting with the NRC and the USACE under the National Historic Preservation Act of 1966 (NHPA), as set forth in 36 CFR 800.8(c)(1)(i);

f. Identify any additional cooperating agencies and, as appropriate, allocate assignments for preparation and schedules for completing the EIS to the NRC, USACE, and any additional cooperating agencies; and

g. Describe how the EIS preparation will include the supplemental information on Make-Up Pond C and any contractor assistance to be used.

The NRC and the USACE invite the following entities to participate in the supplemental scoping process:

a. The applicant, Duke Energy;

b. Any Federal agency that has jurisdiction by law or special expertise with respect to any environmental impact involved or that is authorized to develop and enforce relevant environmental standards;

c. Affected State and local government agencies, including those authorized to develop and enforce relevant environmental standards;

d. Any affected Indian tribe; and

e. Any person who requests or has requested an opportunity to participate in the supplemental scoping process.

In accordance with 10 CFR 51.26, the scoping process for an EIS may include a public scoping meeting to help identify significant issues related to a proposed activity and to determine the scope of issues to be addressed in an EIS. The NRC and the USACE will hold an additional public scoping meeting for the EIS to gather comments on the supplement to the ER submitted for the Duke COL application. The scoping meeting is scheduled for Thursday, June 17, 2010, at Restoration Church International, 1905 N. Limestone Street, Gaffney, South Carolina 29340. The meeting will convene at 7:00 p.m. and will continue until approximately 10 p.m. The meeting will be transcribed and will include: (1) An overview by the NRC and USACE staff of the NEPA environmental review process, and (2) the opportunity for interested government agencies, organizations, and individuals to submit comments or suggestions on the environmental issues or the proposed scope of the EIS as it pertains to the additional source of make-up water described in the supplement to the ER. Additionally, the

NRC and USACE staff will host informal discussions from 6 p.m. to 7 p.m. before the start of the meeting at Restoration Church International. No formal comments will be accepted during the informal discussions. To be considered, comments must be provided either at the transcribed public meeting or in writing, as discussed below.

Persons may register to attend or present oral comments at the meeting on the scope of the NEPA review by contacting Ms. Sarah Lopas at 1–800–368–5642, extension 1147, or via e-mail to the NRC at *Lee.COLAEIS@nrc.gov,* no later than June 14, 2010.

Members of the public may also register to speak at the open house prior to the start of the meeting. Individual oral comments may be limited by the time available, depending on the number of persons who register. Members of the public who have not registered may also have an opportunity to speak, if time permits. Public comments on the supplement to the ER will be considered in the supplemental scoping process for the EIS. Ms. Sarah Lopas will need to be contacted no later than June 4, 2010, if special equipment or accommodations are needed to attend or present information at the public meeting, so that the NRC staff can determine whether the request can be accommodated.

Members of the public may send written comments on the supplement to the ER to the Chief, Rules, Announcements, and Directives Branch, Division of Administrative Services, Office of Administration, Mailstop TWB–05–B01M, U.S. Nuclear Regulatory Commission, Washington, DC 20555–0001, and should cite the publication date and page number of this **Federal Register** notice. To ensure that comments are considered in the supplemental scoping process, written comments must be post-marked or delivered by the end of the supplemental scoping comment period, which is July 2, 2010. Electronic comments may be sent via the Internet to the NRC at *Lee.COLAEIS@nrc.gov.* Electronic submissions must be sent no later than July 2, 2010, to ensure that they will be considered in the supplemental scoping process. Comments will be available electronically and accessible through the NRC's ERR link at *http://www.nrc.gov/readingrm/adams.html.* The NRC staff may consider comments submitted after the end of the comment period, as time and resources permit. Participation in the supplemental scoping process does not entitle participants to become parties to the proceeding to which the EIS relates. Because your comments will not be edited to remove any identifying or contact information, the NRC cautions you against including any information in your submission that you do not want to be publicly disclosed.

The NRC requests that any party soliciting or aggregating comments received from other persons for submission to the NRC inform those persons that the NRC will not edit their comments to remove any identifying or contact information, and therefore, they should not include any information in their comments that they do not want publicly disclosed.

At the conclusion of the supplemental scoping process, the NRC staff will prepare a concise summary of the determination and conclusions reached on the scope of the environmental review for the supplemental information on Make-Up Pond C, including the significant issues identified, and will send a copy of the summary to each participant in the supplemental scoping process for whom the staff has an address. The summary will also be available for inspection through the NRC's ERR link. The staff will then prepare and issue for comment the draft EIS, which will be the subject of separate **Federal Register** notices and a separate public meeting. Copies of the draft EIS will be available for public inspection at the above-mentioned address, and one copy per request will be provided free of charge. After receipt and consideration of the comments on the draft EIS, the NRC staff will prepare a final EIS, which will also be available for public inspection.

Information about the proposed EIS and the scoping process may be obtained from Ms. Sarah Lopas at 1–800–368–5642, extension 1147.

Dated at Rockville, Maryland, this 18th day of May 2010.

For the Nuclear Regulatory Commission.

Barry Zalcman,

Acting Director, Division of Site and Environmental Reviews, Office of New Reactors.

[FR Doc. 2010–12372 Filed 5–21–10; 8:45 am]

BILLING CODE 7590–01–P

NUCLEAR REGULATORY COMMISSION

Advisory Committee on Reactor Safeguards (ACRS) Meeting of the ACRS Subcommittee on Planning and Procedures

The ACRS Subcommittee on Planning and Procedures will hold a meeting on June 8, 2010, in Room T–2B1, at 11545 Rockville Pike, Rockville, Maryland.

The entire meeting will be open to public attendance, with the exception of a portion that may be closed pursuant to 5 U.S.C. 552b (c)(2) and (6) to discuss organizational and personnel matters that relate solely to the internal personnel rules and practices of the ACRS, and information the release of which would constitute a clearly unwarranted invasion of personal privacy.

The agenda for the subject meeting shall be as follows:

Tuesday, June 8, 2010, 12 p.m.–1 p.m.

The Subcommittee will discuss proposed ACRS activities and related matters. The Subcommittee will gather information, analyze relevant issues and facts, and formulate proposed positions and actions, as appropriate, for deliberation by the Full Committee.

Members of the public desiring to provide oral statements and/or written comments should notify the Designated Federal Official (DFO), Peter Wen (Telephone 301–415–2832 or E-mail (*Peter.Wen@nrc.gov*) five days prior to the meeting, if possible, so that appropriate arrangements can be made. Thirty-five hard copies of each presentation or handout should be provided to the DFO thirty minutes before the meeting. In addition, one electronic copy of each presentation should be emailed to the DFO one day before the meeting. If an electronic copy cannot be provided within this timeframe, presenters should provide the DFO with a CD containing each presentation at least thirty minutes before the meeting. Electronic recordings will be permitted only during those portions of the meeting that are open to the public. Detailed procedures for the conduct of and participation in ACRS meetings were published in the **Federal Register** on October 14, 2009 (74 FR 58268–58269).

Detailed meeting agendas and meeting transcripts are available on the NRC Web site at *http://www.nrc.gov/reading-rm/doc-collections/acrs.* Information regarding topics to be discussed, changes to the agenda, whether the meeting has been canceled or rescheduled, and the time allotted to present oral statements can be obtained from the website cited above or by contacting the identified DFO. Moreover, in view of the possibility that the schedule for ACRS meetings may be adjusted by the Chairman as necessary to facilitate the conduct of the meeting, persons planning to attend should check with these references if such rescheduling would result in a major inconvenience.

Dated: May 14, 2010.

Alesha Bellinger,

Acting Executive Director, Advisory Committee on Reactor Safeguards.

[FR Doc. 2010–12374 Filed 5–21–10; 8:45 am]

BILLING CODE 7590–01–P

NUCLEAR REGULATORY COMMISSION

Advisory Committee on Reactor Safeguards (ACRS) Meeting of the ACRS Subcommittee on APWR

The ACRS Subcommittee on Advanced Pressurized Water Reactor (APWR) will hold a meeting on June 7, 2010, Room T–2B1, 11545 Rockville Pike, Rockville, Maryland.

The entire meeting will be open to public attendance, with the exception of a portion that may be closed to protect information that is proprietary to Mitsubishi Heavy Industries, Ltd. (MHI) and its contractors pursuant to 5 U.S.C. 552b(c)(4).

The agenda for the subject meeting shall be as follows:

Monday, June 7, 2010, 8:30 a.m.–5 p.m.

The Subcommittee will review Chapters 2 and 16 of the SER with Open Items associated with the USAPWR Design Certification. Chapter 2 is "Site Characteristics" and Chapter 16 is "Technical Specifications." The Subcommittee will hear presentations by and hold discussions with representatives of the NRC staff, stakeholders, and other interested persons regarding this matter. The Subcommittee will gather information, analyze relevant issues and facts, and formulate proposed positions and actions, as appropriate, for deliberation by the Full Committee.

Members of the public desiring to provide oral statements and/or written comments should notify the Designated Federal Official (DFO), Mr. Neil Coleman (Telephone 301–415–7656 or e-mail *Neil.Coleman@NRC.gov*) five days prior to the meeting, if possible, so that appropriate arrangements can be made. Thirty-five hard copies of each presentation or handout should be provided to the DFO thirty minutes before the meeting. In addition, one electronic copy of each presentation should be e-mailed to the DFO one day before the meeting. If an electronic copy cannot be provided within this timeframe, presenters should provide the DFO with a CD containing each presentation at least thirty minutes before the meeting. Electronic recordings will be permitted only during those portions of the meeting that are open to the public. Detailed procedures for the conduct of and participation in ACRS meetings were published in the **Federal Register** on October 14, 2009 (74 FR 58268–58269).

Detailed meeting agendas and meeting transcripts are available on the NRC Web site at *http://www.nrc.gov/reading-rm/doc-collections/acrs.* Information regarding topics to be discussed, changes to the agenda, whether the meeting has been canceled or rescheduled, and the time allotted to present oral statements can be obtained from the Web site cited above or by contacting the identified DFO. Moreover, in view of the possibility that the schedule for ACRS meetings may be adjusted by the Chairman as necessary to facilitate the conduct of the meeting, persons planning to attend should check with these references if such rescheduling would result in a major inconvenience.

Dated: May 14, 2010.

Alesha Belling,

Acting Executive Director, Advisory Committee on Reactor Safeguards.

[FR Doc. 2010–12367 Filed 5–21–10; 8:45 am]

BILLING CODE 7590–01–P

NUCLEAR REGULATORY COMMISSION

Advisory Committee on Reactor Safeguards (ACRS); Meeting of the ACRS Subcommittee on ABWR

The ACRS Subcommittee on ABWR will hold a meeting on June 8, 2010, Room T–2B1, 11545 Rockville Pike, Rockville, Maryland.

The entire meeting will be open to public attendance, with the exception of a portion that may be closed to protect information that is proprietary to the South Texas Project Nuclear Operating Company and/or its contractors pursuant to 5 U.S.C. 552b(c)(4).

The agenda for the subject meeting shall be as follows:

Tuesday, June 8, 2010, 1 p.m.–5 p.m.

The purpose of this meeting is to review Chapter 19 of the Safety Evaluation Report with Open Items associated with the Combined License Application for South Texas Project Units 3 and 4. The Subcommittee will hear presentations by and hold discussions with representatives of the NRC staff, the South Texas Project Nuclear Operating Company, and other interested persons regarding this matter. The Subcommittee will gather information, analyze relevant issues and facts, and formulate proposed positions and actions, as appropriate, for deliberation by the Full Committee.

Members of the public desiring to provide oral statements and/or written comments should notify the Designated Federal Official (DFO), Maitri Banerjee (Telephone 301–415–6973 or e-mail *Maitri.Banerjee@nrc.gov*) five days prior to the meeting, if possible, so that appropriate arrangements can be made. Thirty-five hard copies of each presentation or handout should be provided to the DFO thirty minutes before the meeting. In addition, one electronic copy of each presentation should be emailed to the DFO one day before the meeting. If an electronic copy cannot be provided within this timeframe, presenters should provide the DFO with a CD containing each presentation at least thirty minutes before the meeting. Electronic recordings will be permitted only during those portions of the meeting that are open to the public. Detailed procedures for the conduct of and participation in ACRS meetings were published in the **Federal Register** on October 14, 2009 (74 FR 58268–58269).

Detailed meeting agendas and meeting transcripts are available on the NRC Web site at *http://www.nrc.gov/reading-rm/doc-collections/acrs.* Information regarding topics to be discussed, changes to the agenda, whether the meeting has been canceled or rescheduled, and the time allotted to present oral statements can be obtained from the website cited above or by contacting the identified DFO. Moreover, in view of the possibility that the schedule for ACRS meetings may be adjusted by the Chairman as necessary to facilitate the conduct of the meeting, persons planning to attend should check with these references if such rescheduling would result in a major inconvenience.

Dated: May 14, 2010.

Alesha Bellinger,

Acting Executive Director, Advisory Committee on Reactor Safeguards.

[FR Doc. 2010–12375 Filed 5–21–10; 8:45 am]

BILLING CODE 7590–01–P

NUCLEAR REGULATORY COMMISSION

Advisory Committee on Reactor Safeguards (ACRS); Meeting of the ACRS Subcommittee on Plant License Renewal

The ACRS Subcommittee on Plant License Renewal will hold a meeting on June 8, 2010, Room T–2B1, 11545 Rockville Pike, Rockville, Maryland.

The entire meeting will be open to public attendance.

The agenda for the subject meeting shall be as follows:

Tuesday, June 8, 2010, 8:30 a.m.–12:00 p.m.

The Subcommittee will discuss the Duane Arnold Energy Center License Renewal Application and the associated Safety Evaluation Report (SER) with Open Items prepared by the staff. The Subcommittee will hear presentations by and hold discussions with representatives of the NRC staff, FPL Energy Duane Arnold, LLC, and other interested persons regarding this matter. The Subcommittee will gather information, analyze relevant issues and facts, and formulate proposed positions and actions, as appropriate, for deliberation by the Full Committee.

Members of the public desiring to provide oral statements and/or written comments should notify the Designated Federal Official (DFO), Mrs. Kathy Weaver (Telephone 301–415–6236 or e-mail *Kathy.Weaver@nrc.gov*) five days prior to the meeting, if possible, so that appropriate arrangements can be made. Thirty-five hard copies of each presentation or handout should be provided to the DFO thirty minutes before the meeting. In addition, one electronic copy of each presentation should be emailed to the DFO one day before the meeting. If an electronic copy cannot be provided within this timeframe, presenters should provide the DFO with a CD containing each presentation at least 30 minutes before the meeting. Electronic recordings will be permitted only during those portions of the meeting that are open to the public. Detailed procedures for the conduct of and participation in ACRS meetings were published in the **Federal Register** on October 14, 2009 (74 FR 58268–58269).

Detailed meeting agendas and meeting transcripts are available on the NRC Web site at *http://www.nrc.gov/reading-rm/doc-collections/acrs.* Information regarding topics to be discussed, changes to the agenda, whether the meeting has been canceled or rescheduled, and the time allotted to present oral statements can be obtained from the website cited above or by contacting the identified DFO. Moreover, in view of the possibility that the schedule for ACRS meetings may be adjusted by the Chairman as necessary to facilitate the conduct of the meeting, persons planning to attend should check with these references if such rescheduling would result in a major inconvenience.

Dated: May 14, 2010.

Alesha Bellinger,

Acting Executive Director, Advisory Committee on Reactor Safeguards.

[FR Doc. 2010–12377 Filed 5–21–10; 8:45 am]

BILLING CODE 7590–01–P

SECURITIES AND EXCHANGE COMMISSION

[Release No. 34–62120; File No. S7–04–09]

Order Granting Temporary Conditional Exemption for Nationally Recognized Statistical Rating Organizations From Requirements of Rule 17g–5 Under the Securities Exchange Act of 1934 and Request for Comment

May 19, 2010.

I. Introduction

The Securities and Exchange Commission ("Commission") is conditionally exempting, with respect to certain credit ratings and until December 2, 2010, nationally recognized statistical rating organizations ("NRSROs") from requirements in Rule 17g–5(a)(3) [1] under the Securities Exchange Act of 1934 ("Exchange Act") discussed below that have a compliance date of June 2, 2010.[2] Starting on that date, Rule 17g–5(a)(3) will apply when an issuer, sponsor, or underwriter (each an "arranger") hires an NRSRO to determine an initial credit rating for a security or money market instrument issued by an asset pool or as part of any asset-backed or mortgage-backed securities transaction (a "structured finance product").[3] However, under this order, an NRSRO is not required to comply with Rule 17g–5(a)(3) until December 2, 2010 with respect to credit ratings where: (1) The issuer of the structured finance product is a non-U.S. person; and (2) the NRSRO has a reasonable basis to conclude that the structured finance product will be offered and sold upon issuance, and that any arranger linked to the structured finance product will effect transactions of the structured finance product after issuance, only in transactions that occur outside the U.S. The Commission also is soliciting comment regarding the application of Rule 17g–5(a)(3) to transactions outside of the U.S.

II. Background

Rule 17g–5 identifies, in paragraphs (b) and (c) of the rule, a series of conflicts of interest arising from the business of determining credit ratings.[4] Paragraph (a) of Rule 17g–5 [5] prohibits an NRSRO from issuing or maintaining a credit rating if it is subject to the conflicts of interest identified in paragraph (b) of Rule 17g–5 unless the NRSRO has taken the steps prescribed in paragraph (a)(1) (*i.e.,* disclosed the type of conflict of interest in Exhibit 6 to Form NRSRO in accordance with Section 15E(a)(1)(B)(vi) of the Exchange Act [6] and Rule 17g–1) [7] and paragraph (a)(2) (*i.e.,* established and is maintaining and enforcing written policies and procedures to address and manage conflicts of interest in accordance with Section 15E(h) of the Exchange Act).[8] Paragraph (c) of Rule 17g–5 specifically prohibits outright seven types of conflicts of interest. Consequently, an NRSRO is prohibited from issuing or maintaining a credit rating when subject to these conflict regardless of whether it had disclosed them and established procedures reasonably designed to address them.

In December 2009, the Commission adopted subparagraph (a)(3) of Rule 17g–5, which added new provisions to Rule 17g–5. These provisions require an NRSRO that is hired by an arranger to determine an initial credit rating for a structured finance product to take certain steps designed to allow an NRSRO that is not hired by the arranger to nonetheless determine an initial credit rating—and subsequently monitor that credit rating—for the structured finance product.[9] In particular, under Rule 17g–5(a)(3), an NRSRO is prohibited from issuing or maintaining a credit rating when it is subject to the conflict of interest identified in paragraph (b)(9) of Rule 17g–5 (*i.e.,* being hired by an arranger to determine a credit rating for a structured finance

[1] 17 CFR 240.17g–5(a)(3).

[2] *See* Securities Exchange Act Release No. 61050 (Nov. 23, 2009), 74 FR 63832 (Dec. 4, 2009) ("Adopting Release").

[3] In the Adopting Release, the Commission stated that it intended the term "security or money market instrument issued by an asset pool or as part of any asset-backed or mortgage-backed securities transaction," which mirrors, in part, the text of Section 15E(i)(1)(B) of the Exchange Act (15 U.S.C. 78o–7(i)(1)(B)), to cover the full range of structured finance products, including, but not limited to, securities collateralized by static and actively managed pools of loans or receivables (*e.g.,* commercial and residential mortgages, corporate loans, auto loans, education loans, credit card receivables, and leases), collateralized debt obligations, collateralized loan obligations, collateralized mortgage obligations, structured investment vehicles, synthetic collateralized debt obligations that reference debt securities or indexes, and hybrid collateralized debt obligations.

[4] 17 CFR 240.17g–5(b) and (c).

[5] 17 CFR 240.17g–5(a).

[6] 15 U.S.C. 78o–7(a)(1)(B)(vi).

[7] 17 CFR 240.17g–1.

[8] 15 U.S.C. 78o–7(h).

[9] *See* 17 CFR 240.17g–5(a)(3); *see also* Adopting Release at 63844–45.

product)[10] unless it has taken the steps prescribed in paragraphs (a)(1) and (2) of Rule 17g–5 (discussed above) and the steps prescribed in new paragraph (a)(3) of Rule 17g–5.[11] Rule 17g–5(a)(3), among other things, requires that the NRSRO must:

- Maintain on a password-protected Internet Web site a list of each structured finance product for which it currently is in the process of determining an initial credit rating in chronological order and identifying the type of structured finance product, the name of the issuer, the date the rating process was initiated, and the Internet Web site address where the arranger represents the information provided to the hired NRSRO can be accessed by other NRSROs;
- Provide free and unlimited access to such password-protected Internet Web site during the applicable calendar year to any NRSRO that provides it with a copy of the certification described in paragraph (e) of Rule 17g–5 that covers that calendar year;[12] and
- Obtain from the arranger a written representation that can reasonably be relied upon that the arranger will, among other things, disclose on a password-protected Internet Web site the information it provides to the hired NRSRO to determine the initial credit rating (and monitor that credit rating) and provide access to the web site to an NRSRO that provides it with a copy of the certification described in paragraph (e) Rule 17g–5.[13]

The Commission stated in the Adopting Release that subparagraph Rule 17g–5(a)(3) is designed to address conflicts of interest and improve the quality of credit ratings for structured finance products by making it possible for more NRSROs to rate structured finance products.[14] For example, the Commission noted that when an NRSRO is hired to rate a structured finance product, some of the information it relies on to determine the rating is generally not made public.[15] As a result, structured finance products frequently are issued with ratings from only the one or two NRSROs that have been hired by the arranger, with the attendant conflict of interest that creates.[16] Consequently, the Commission stated that subparagraph Rule 17g–5(a)(3) was designed to increase the number of credit ratings extant for a given structured finance product and, in particular, to promote the issuance of credit ratings by NRSROs that are not hired by the arranger.[17] The Commission's goal in adopting the rule was to provide users of credit ratings with more views on the creditworthiness of the structured finance product.[18] In addition, the Commission stated that Rule 17g–5(a)(3) was designed to reduce the ability of arrangers to obtain better than warranted ratings by exerting influence over NRSROs hired to determine credit ratings for structured finance products.[19] Specifically, by opening up the rating process to more NRSROs, the Commission intended to make it easier for the hired NRSRO to resist such pressure by increasing the likelihood that any steps taken to inappropriately favor the arranger could be exposed to the market through the credit ratings issued by other NRSROs.[20]

Rule 17g–5(a)(3) became effective on February 2, 2010, and the compliance date for Rule 17g–5(a)(3) is June 2, 2010.

III. Basis for Relief

As discussed above, Rule 17g–5(a)(3) requires the hired NRSRO to obtain certain representations from an arranger in order to determine an initial credit rating for a structured finance product. Staff from the U.K. Financial Services Authority ("U.K. FSA"), the Japan Financial Services Authority ("Japan FSA"), Ontario Securities Commission ("OSC") and the German Federal Financial Services Authority ("BaFin") (collectively, the "Foreign Securities Regulators"), as well as a number of market participants,[21] have notified the

[10] Paragraph (b)(9) Rule 17g–5 identifies the following conflict of interest: Issuing or maintaining a credit rating for a security or money market instrument issued by an asset pool or as part of any asset-backed or mortgage-backed securities transaction that was paid for by the issuer, sponsor, or underwriter of the security or money market instrument. 17 CFR 240.17g–5(b)(9).

[11] 17 CFR 240.17g–5(a)(3).

[12] Paragraph (e) of Rule 17g–5 requires that an NRSRO seeking to access the hired NRSRO's Internet web site during the applicable calendar year must furnish the Commission with the following certification:

The undersigned hereby certifies that it will access the Internet Web sites described in 17 CFR 240.17g–5(a)(3) solely for the purpose of determining or monitoring credit ratings. Further, the undersigned certifies that it will keep the information it accesses pursuant to 17 CFR 240.17g–5(a)(3) confidential and treat it as material nonpublic information subject to its written policies and procedures established, maintained, and enforced pursuant to section 15E(g)(1) of the Act (15 U.S.C. 78o–7(g)(1)) and 17 CFR 240.17g–4. Further, the undersigned certifies that it will determine and maintain credit ratings for at least 10% of the issued securities and money market instruments for which it accesses information pursuant to 17 CFR 240.17g–5(a)(3)(iii), if it accesses such information for 10 or more issued securities or money market instruments in the calendar year covered by the certification. Further, the undersigned certifies one of the following as applicable: (1) In the most recent calendar year during which it accessed information pursuant to § 17 CFR 240.17g–5(a)(3), the undersigned accessed information for [Insert Number] issued securities and money market instruments through Internet Web sites described in 17 CFR 240.17g–5(a)(3) and determined and maintained credit ratings for [Insert Number] of such securities and money market instruments; or (2) The undersigned previously has not accessed information pursuant to 17 CFR 240.17g–5(a)(3) 10 or more times during the most recently ended calendar year.

[13] In particular, under paragraph (a)(3)(iii) of Rule 17g–5, the arranger must represent to the hired NRSRO that it will:

(1) Maintain the information described in paragraphs (a)(3)(iii)(C) and (a)(3)(iii)(D) of Rule 17g–5 available at an identified password-protected Internet Web site that presents the information in a manner indicating which information currently should be relied on to determine or monitor the credit rating;

(2) Provide access to such password-protected Internet Web site during the applicable calendar year to any NRSRO that provides it with a copy of the certification described in paragraph (e) of Rule 17g–5 that covers that calendar year, provided that such certification indicates that the nationally recognized statistical rating organization providing the certification either: (i) Determined and maintained credit ratings for at least 10% of the issued securities and money market instruments for which it accessed information pursuant to paragraph (a)(3)(iii) of Rule 17g–5 in the calendar year prior to the year covered by the certification, if it accessed such information for 10 or more issued securities or money market instruments; or (ii) has not accessed information pursuant to paragraph (a)(3) of Rule 17g–5 10 or more times during the most recently ended calendar year.

(3) Post on such password-protected Internet Web site all information the arranger provides to the NRSRO, or contracts with a third party to provide to the NRSRO, for the purpose of determining the initial credit rating for the security or money market instrument, including information about the characteristics of the assets underlying or referenced by the security or money market instrument, and the legal structure of the security or money market instrument, at the same time such information is provided to the NRSRO; and

(4) Post on such password-protected Internet Web site all information the arranger provides to the NRSRO, or contracts with a third party to provide to the NRSRO, for the purpose of undertaking credit rating surveillance on the security or money market instrument, including information about the characteristics and performance of the assets underlying or referenced by the security or money market instrument at the same time such information is provided to the NRSRO.

[14] Adopting Release at 63844.

[15] *Id.*

[16] *Id.*

[17] *Id.*

[18] *Id.*

[19] *Id.*

[20] *Id.*

[21] *See* letter dated March 30, 2010 from Richard Watson, Managing Director and Chief Operating Officer, Association for Financial Markets in Europe/European Securitsation Forum (AFME/ESF); letter dated April 30, 2010 from Christopher Killian, Vice President, Securitization Group of the Securities Industry and Financial Markets Association (SIFMA); letter dated April 30, 2010 from Neal Sullivan, Bingham McCutchen LLP on behalf of Rating and Investment Information, Inc.; letter dated May 3, 2010 from Tom Deutsch, Executive Director, American Securitization Forum; letter dated May 5, 2010 from Richard Watson, Managing Director and Chief Operating Officer, AFME/ESF; and letter dated May 12, 2010 from Guido Ravoet, European Banking Federation ("EBF Letter"). These letters, as well as other comments received by Commission staff in connection with subparagraph (a)(3) of Rule 17g–5 are available on

Commission staff that arrangers of structured finance products located outside the U.S. generally were not aware that they would be required to make the representations prescribed in Rule 17g–5 in order to obtain credit ratings from NRSROs. These Foreign Securities Regulators and market participants have informed the Commission staff that many foreign arrangers are not prepared to make and adhere to the prescribed representations beginning on June 2, 2010 in terms of establishing the requisite Internet Web sites, implementing other systems requirements necessary to make the disclosures and analyzing the application of local laws to their adherence to the disclosure requirements. Consequently, they have expressed concern that local securitization markets may be disrupted because the arrangers would not able to make and adhere to the representations necessary to obtain credit ratings from NRSROs for new issuances of structured finance products. Foreign Securities Regulators and European issuers have also expressed concern about the potential conflict between the requirements of Rule 17g–5(a)(3) and European Union ("EU") data protection and bank secrecy law and EU rating regulation, in addition to explaining that additional time is needed to identify other potential conflicts with EU and national laws.[22]

In the Adopting Release, the Commission noted that it was providing a delayed compliance date—180 days after publication of certain rule amendments, including Rule 17g–5(a)(3), in the **Federal Register**—to allow NRSROs sufficient time to implement the new requirements.[23] Despite this delayed compliance date, overseas arrangers and market participants are not ready to comply with Rule 17g–5(a)(3), and Foreign Securities Regulators have expressed their respective belief that, absent relief, these arrangers and market participants will be unable to comply with Rule 17g–5(a)(3) with the result that overseas securitization markets may be disrupted. Section 36 of the Exchange Act authorizes the Commission to exempt any person, security, or transaction, or any class or classes of persons, securities, or transactions, from any provision of the Exchange Act or any rule thereunder to the extent that such exemption is necessary or appropriate in the public interest, and is consistent with the protection of investors. Given the risk of serious disruptions to local securitization markets that have been described by Foreign Securities Regulators, the Commission believes that it is in the public interest, and consistent with the protection of investors, to delay the application of Rule 17g–5(a)(3) to certain overseas transactions and entities. Accordingly, the Commission is conditionally exempting, with respect to certain credit ratings and until December 2, 2010, NRSROs from requirements in Rule 17g–5(a)(3)[24] with respect to certain overseas transactions that are more fully described below.

IV. Description of the Conditional Temporary Exemption

The Commission is conditionally exempting NRSROs from Rule 17g–5(a)(3) until December 2, 2010 with respect to credit ratings where: (1) The issuer of the structured finance product is a non-U.S. person; and (2) the NRSRO has a reasonable basis to conclude that the structured finance product will be offered and sold upon issuance, and that any arranger linked to the structured finance product will effect transactions in the structured finance product after issuance, only in transactions that occur outside the U.S. These conditions are designed to confine the exemption's application to credit ratings of structured finance products issued in, and linked to, financial markets outside the U.S.

The Commission notes that this exemption only applies to subparagraph (a)(3) of Rule 17g–5. It does not cover any other requirements in Rule 17g–5. Consequently, if an NRSRO determines a credit rating for a structured finance product that is exempt from Rule 17g–5(a)(3), the NRSRO remains subject to all the other prohibitions in Rule 17g–5.

A. The Issuer Must Be a Non-U.S. Person

The first condition of the exemption is that the issuer of the structured finance product must be a non-U.S. person. The Commission understands that preparations for compliance with Rule 17g–5(a)(3) are lacking with respect to overseas issuers. This condition—that the issuer be a non-U.S. person—is designed to provide the necessary relief for overseas issuers while circumscribing the relief to the scope of the problem that has been described to the Commission staff so that Rule 17g–5(a)(3) may go into effect to the extent possible. Further, the requirement is designed to suit the nature of the structured finance issuers. Many structured finance product issuers are bankruptcy remote special purpose vehicles. As such, they are primarily legal constructions as compared with operating companies that have employees, principal places of business, and physical locations. Consequently, rather than impose a condition that the issuer be *located* outside the U.S., the Commission is establishing a condition that the issuer be a non-U.S. person. To this end, and for the purposes of this order, the Commission intends a "U.S. person" to have the same definition as under Regulation S under the Securities Act.[25] Consequently, to satisfy this exemption, the NRSRO must be determining a credit rating for a structured finance product issued by a person that is not a U.S. person.

B. Transactions Must Be Outside the U.S.

The second condition of the exemption is that the NRSRO has a reasonable basis to conclude that the structured finance product will be offered and sold upon issuance, and that any arranger linked to the structured finance product will effect transactions of the structured finance product after issuance, only in transactions that occur outside the U.S. The Commission is confining the relief to only those transactions that occur outside the U.S. because it understands that it is with respect to overseas transactions that compliance preparations are lacking. Thus, circumscribing the relief to only those transactions that occur outside the U.S. will provide the necessary relief but still allow Rule 17g–5(a)(3) to come into effect where there are no such problems. An example of a transaction that occurs outside the U.S. would be a transaction that complies with the applicable safe harbor under Rules 903 and 904 of Regulation S.[26]

The question of whether an NRSRO has a "reasonable basis" to conclude that the structured finance product will be offered and sold upon issuance, and than any arranger linked to the structured finance product will effect transactions of the structured finance product after issuance, in transactions that occur outside the U.S. will depend on the facts and circumstances of a given situation. In order to have a reasonable basis to make these conclusions, the NRSRO should discuss with any arranger linked to the

the Commission's Internet Web site, located at *http://www.sec.gov/comments/s7-04-09/s70409.shtml* and for Web site viewing and printing in the Commission's Public Reference Room in its Washington, DC headquarters.

[22] *See, e.g.,* EBF Letter.

[23] *See* Adopting Release at 63834.

[24] 17 CFR 240.17g–5(a)(3).

[25] 17 CFR 230.902(k).

[26] 17 CFR. 230.903; 17 CFR 230.904.

structured finance product (*i.e.,* the sponsor, underwriter, and issuer) how they intend to market and sell the structured finance product and how they intend to engage in any secondary market activities (*i.e.,* re-sales) of the structured finance product. An NRSRO may choose to obtain from the arranger a representation upon which the NRSRO can reasonably rely that sales of the structured finance product will meet this condition. Factors relevant to the analysis of whether such reliance would be reasonable would include, but not be limited to: (1) Ongoing or prior failures by the arranger to adhere to its representations; or (2) a pattern of conduct by the arranger where it fails to promptly correct breaches of its representations.

V. Request for Comment

The Commission notes that it intends to monitor the use of this temporary exemption to evaluate whether it is being used for transactions that meet the above-described conditions. If the Commission discovers that this temporary exemption is being used otherwise, it will consider whether further action is appropriate, including whether to revise or revoke the exemption. In this connection, the Commission requests comment on the following:

- With respect to foreign regulators, regulations, and laws, what specific conflicts, if any, will arise from the application of Rule 17g–5(a)(3)?
- Do any NRSROs, or credit rating agencies considering applying for registration as an NRSRO, intend to use information required to be provided on password-protected Internet Web sites by Rule 17g–5(a)(3) to determine and monitor credit ratings with respect to credit ratings that are being exempted from the requirements of Rule 17g–5(a)(3)? NRSROs or credit rating agencies that intend to use such information to determine and monitor credit ratings with respect to credit ratings that are being exempted are asked to provide specific details on when they expect to be ready to determine and monitor such credit ratings.
- What are the different types of structured finance and similar products used outside the U.S.? What factors should determine whether an instrument sold entirely or primarily outside of the U.S. is a structured finance product?
- What actions are NRSROs taking to prepare to comply with Rule 17g–5(a)(3)'s application to credit ratings that are being exempted by this order? What specific costs—compliance, operational, and any others—will be associated with that compliance, including costs to arrangers?

Comments may be submitted by any of the following methods:

Electronic Comments

- Use the Commission's Internet comment form (*http://www.sec.gov/rules/exorders.shtml*); or
- Send an e-mail to *rule-comments@sec.gov.* Please include File Number S7–04–09 on the subject line; or
- Use the Federal eRulemaking Portal (*http://www.regulations.gov*). Follow the instructions for submitting comments.

Paper Comments

- Send paper comments in triplicate to Elizabeth M. Murphy, Secretary, Securities and Exchange Commission, 100 F St., NE., Washington, DC 20549–1090.

All submissions should refer to File Number S7–04–09. This file number should be included on the subject line if e-mail is used. To help us process and review your comments more efficiently, please use only one method. The Commission will post all comments on the Commission's Internet Web site (*http://www.sec.gov/rules/exorders.shtml*). Comments are also available for Web site viewing and printing in the Commission's Public Reference Room, 100 F St., NE., Washington, DC 20549 on official business days between the hours of 10 a.m. and 3 p.m. All comments received will be posted without change; the Commission does not edit personal identifying information from submissions. You should submit only information that you wish to make available publicly.

VI. Conclusion

For the foregoing reasons, the Commission believes it would be necessary or appropriate in the public interest and consistent with the protection of investors to grant a temporary exemption from the requirements in Rule 17g–5(a)(3) with respect to certain credit ratings.

Accordingly, it is hereby ordered, pursuant to Section 36 of the Exchange Act, that a nationally recognized statistical rating organization is exempt until December 2, 2010 from the requirements in Rule 17g–5(a)(3) (17 CFR 240.17g–5(a)(3)) for credit ratings where:

(1) The issuer of the security or money market instrument is not a U.S. person (as defined under Securities Act Rule 902(k)); and

(2) The nationally recognized statistical rating organization has a reasonable basis to conclude that the structured finance product will be offered and sold upon issuance, and that any arranger linked to the structured finance product will effect transactions of the structured finance product after issuance, only in transactions that occur outside the U.S.

By the Commission.

Elizabeth M. Murphy,

Secretary.

[FR Doc. 2010–12373 Filed 5–21–10; 8:45 am]

BILLING CODE 8011–01–P

SECURITIES AND EXCHANGE COMMISSION

[Release No. 34–62124; File No. SR–BX–2010–037]

Self-Regulatory Organizations; Notice of Filing of a Proposed Rule Change by NASDAQ OMX BX, Inc. To Adopt Rule 4120(a)(11) Concerning Individual Stock Trading Pauses and To Adopt Related IM–4120–3

May 19, 2010.

Pursuant to Section 19(b)(1) of the Securities Exchange Act of 1934 ("Act"),[1] and Rule 19b-4 thereunder,[2] notice is hereby given that on May 18, 2010, NASDAQ OMX BX, Inc. (the "Exchange" or "BX") filed with the Securities and Exchange Commission ("Commission") the proposed rule change as described in Items I and II below, which Items have been prepared by the Exchange. The Commission is publishing this notice to solicit comments on the proposed rule change from interested persons.

I. Self-Regulatory Organization's Statement of the Terms of Substance of the Proposed Rule Change

The Exchange is filing this proposed rule change to adopt Rule 4120(a)(11) concerning individual stock trading pauses in certain securities, and to adopt related IM–4120–3.

The text of the proposed rule change is below. Proposed new language is in *italics* and proposed deletions are in [brackets].[3]

* * * * *

4120. Trading Halts

(a) Authority to Initiate Trading Halts *or Pauses*

---

[1] 15 U.S.C. 78s(b)(1).

[2] 17 CFR 240.19b–4.

[3] The text of the proposed rule change is available from BX's Web site at *http://nasdaqomxbx.cchwallstreet.com/NASDAQOMXBX/Filings/,* at the Exchange's principal office, and at the Commission's Public Reference Room.

In circumstances in which the Exchange deems it necessary to protect investors and the public interest, the Exchange, pursuant to the procedures set forth in paragraph (c):

(1)–(10) No change.

(11) If a primary listing market issues an individual stock trading pause in any of the Circuit Breaker Securities, as defined in IM–4120–3, the Exchange will pause trading in that security until trading has resumed on the primary listing market. If, however, trading has not resumed on the primary listing market and ten minutes have passed since the individual stock trading pause message has been received from the responsible single plan processor, the Exchange may resume trading in such stock.

(b)–(c) No change.

IM–4120–1. No change.

IM–4120–2. No change.

IM–4120–3. Circuit Breaker Securities Pilot

The provisions of paragraph (a)(11) of this Rule shall be in effect during a pilot set to end on December 10, 2010. During the pilot, the term "Circuit Breaker Securities" shall mean the securities included in the S&P 500® Index.

* * * * *

II. Self-Regulatory Organization's Statement of the Purpose of, and Statutory Basis for, the Proposed Rule Change

In its filing with the Commission, the Exchange included statements concerning the purpose of and basis for the proposed rule change and discussed any comments it received on the proposed rule change. The text of these statements may be examined at the places specified in Item IV below. The Exchange has prepared summaries, set forth in Sections A, B, and C below, of the most significant aspects of such statements.

A. Self-Regulatory Organization's Statement of the Purpose of, and Statutory Basis for, the Proposed Rule Change

1. Purpose

The primary listing markets for U.S. stocks are in the process of amending their rules so that they may, from time to time, issue a trading pause for an individual security if the price of such security moves 10% or more from a sale in a preceding five-minute period. The Exchange is proposing the rule change described below in consultation with other markets and Commission staff to provide for uniform market-wide trading pause standards for individual securities in the S&P 500® Index, as set forth below. The Exchange is not currently the primary listing market for any securities, and thus, will not be issuing any trading pauses pursuant to its rules.

The Exchange proposes to add a new paragraph to BX Rule 4120(a) to allow the Exchange to pause trading in an individual stock when the primary listing market for such stock issues a trading pause in any Circuit Breaker Securities, as defined below and in proposed IM–4120–3. If, however, trading has not resumed on the primary listing market and ten minutes have passed since the individual stock trading pause message has been received from the responsible single plan processor, the Exchange may resume trading in such stock.

The proposed rule would apply to trading pauses issued by primary listing markets in "Circuit Breaker Securities," as defined in proposed IM–4120–3. Specifically, on a pilot basis, set to end on December 10, 2010, Circuit Breaker Securities would mean the securities included in the S&P 500® Index. Thus, proposed paragraph (11) of the Rule would be in effect only with respect to securities in the S&P 500® Index.

2. Statutory Basis

The Exchange believes that the proposed rule change is consistent with the provisions of Section 6 of the Act,[4] in general, and with Sections 6(b)(5) of the Act,[5] in particular, in that the proposal is designed to prevent fraudulent and manipulative acts and practices, to promote just and equitable principles of trade, to foster cooperation and coordination with persons engaged in regulating, clearing, settling, processing information with respect to, and facilitating transactions in securities, to remove impediments to and perfect the mechanism of a free and open market and a national market system, and, in general, to protect investors and the public interest. The proposed rule change is also designed to support the principles of Section 11A(a)(1)[6] of the Act in that it seeks to assure fair competition among brokers and dealers and among exchange markets. The Exchange believes that the proposed rule meets these requirements in that it promotes transparency and uniformity across markets concerning decisions to pause trading in a security when there are significant price movements.

B. Self-Regulatory Organization's Statement on Burden on Competition

The Exchange does not believe that the proposed rule change will result in any burden on competition that is not necessary or appropriate in furtherance of the purposes of the Act, as amended.

C. Self-Regulatory Organization's Statement on Comments on the Proposed Rule Change Received From Members, Participants or Others

Written comments were neither solicited nor received.

III. Date of Effectiveness of the Proposed Rule Change and Timing for Commission Action

Within 35 days of the date of publication of this notice in the **Federal Register** or within such longer period (i) as the Commission may designate up to 90 days of such date if it finds such longer period to be appropriate and publishes its reasons for so finding or (ii) as to which the self-regulatory organization consents, the Commission will:

(A) By order approve the proposed rule change, or

(B) Institute proceedings to determine whether the proposed rule change should be disapproved.[7]

IV. Solicitation of Comments

Interested persons are invited to submit written data, views, and arguments concerning the foregoing, including whether the proposed rule change is consistent with the Exchange Act. Comments may be submitted by any of the following methods:

Electronic Comments

- Use the Commission's Internet comment form (*http://www.sec.gov/rules/sro.shtml*); or
- Send an e-mail to *rule-comments@sec.gov.* Please include File Number SR–BX–2010–037 on the subject line.

Paper Comments

- Send paper comments in triplicate to Elizabeth M. Murphy, Secretary, Securities and Exchange Commission, 100 F Street, NE., Washington, DC 20549–1090.

All submissions should refer to File Number SR–BX–2010–037. This file number should be included on the subject line if e-mail is used. To help the Commission process and review your comments more efficiently, please use only one method. The Commission will post all comments on the Commission's Internet Web site (*http://www.sec.gov/rules/sro.shtml*). Copies of the submission, all subsequent amendments, all written statements with respect to the proposed rule change that are filed with the Commission, and all written communications relating to the

[4] 15 U.S.C. 78f.

[5] 15 U.S.C. 78f(b)(5).

[6] 15 U.S.C. 78k–1(a)(1).

[7] The Commission notes that the Exchange has requested accelerated approval of the filing.

proposed rule change between the Commission and any person, other than those that may be withheld from the public in accordance with the provisions of 5 U.S.C. 552, will be available for Web site viewing and printing in the Commission's Public Reference Room, 100 F Street, NE., Washington, DC 20549, on official business days between the hours of 10 a.m. and 3 p.m. Copies of the filing also will be available for inspection and copying at the principal office of the Exchange. All comments received will be posted without change; the Commission does not edit personal identifying information from submissions. You should submit only information that you wish to make available publicly. All submissions should refer to File Number SR–BX–2010–037 and should be submitted on or before June 3, 2010.[8]

For the Commission, by the Division of Trading and Markets, pursuant to delegated authority.[9]

Florence E. Harmon,

Deputy Secretary.

[FR Doc. 2010–12416 Filed 5–21–10; 8:45 am]

BILLING CODE 8010–01–P

SECURITIES AND EXCHANGE COMMISSION

[Release No. 34–62128; File No. SR–NYSEArca–2010–41]

Self-Regulatory Organizations; NYSE Arca, Inc.; Notice of Filing of a Proposed Rule Change Adding NYSE Arca Equities Rule 7.11 To Provide for a Trading Pause for Individual Securities When the Price Moves 10 Percent or More

May 19, 2010.

Pursuant to Section 19(b)(1) of the Securities Exchange Act of 1934 ("Act") [1] and Rule 19b–4 thereunder,[2] notice is hereby given that on May 18, 2010, NYSE Arca, Inc. ("NYSE Arca" or the "Exchange") filed with the Securities and Exchange Commission ("Commission") the proposed rule change as described in Items I, II, and III below, which Items have been prepared by NYSE Arca. The Commission is publishing this notice to solicit comments on the proposed rule change from interested persons.

I. Self-Regulatory Organization's Statement of the Terms of Substance of the Proposed Rule Change

The Exchange proposes to add NYSE Arca Equities Rule 7.11 to provide for a trading pause for individual securities when the price moves 10 percent or more. A copy of this filing is available on the Exchange's Web site at *http://www.nyse.com*, at the Exchange's principal office, and at the Commission's Public Reference Room.

II. Self-Regulatory Organization's Statement of the Purpose of, and Statutory Basis for, the Proposed Rule Change

In its filing with the Commission, the self-regulatory organization included statements concerning the purpose of, and basis for, the proposed rule change and discussed any comments it received on the proposed rule change. The text of those statements may be examined at the places specified in Item IV below. The Exchange has prepared summaries, set forth in sections A, B, and C below, of the most significant parts of such statements.

A. Self-Regulatory Organization's Statement of the Purpose of, and Statutory Basis for, the Proposed Rule Change

1. Purpose

The Exchange proposes to add NYSE Arca Equities Rule 7.11 to provide for a trading pause for individual securities for which the Exchange is the primary listing market if the price of such security moves 10% or more from a sale in a preceding five-minute period. The Exchange is proposing this rule addition in consultation with other markets and staff of the Securities and Exchange Commission to provide for uniform market-wide trading pause standards for individual securities in the S&P 500® Index that experience rapid price movement, as set forth below.

The Exchange is proposing that this rule be implemented on a pilot basis, set to end on December 10, 2010. During this pilot period, the rule would be in effect only with respect to securities included in the S&P 500® Index securities. During that pilot period, the Exchange will continue to assess whether additional securities need to be added and whether the parameters of the rule would need to be modified to accommodate trading characteristics of different securities.

As proposed, NYSE Arca Equities Rule 7.11 would enable the Exchange to pause trading in an individual security listed on the Exchange if the price moves by 10% as compared to prices of that security in the preceding five-minute period during a trading day, which period is defined as a "Trading Pause." To enable the market to absorb the opening price of a security and to participate in the close, as proposed, the proposed rule would be in effect from 6:45 a.m. to 12:35 p.m., Pacific Time.

Proposed NYSE Arca Equities Rule 7.11(b) sets forth the re-opening procedures following a Trading Pause. As proposed, the Exchange will re-open trading in the security at the end of the Trading Pause subject to the procedures set forth in NYSE Arca Equities Rule 7.35 for a Trading Halt Auction. As proposed, in the event of a significant imbalance, the Exchange may delay the re-opening of the security past the five-minute Trading Pause period. The Exchange will notify other markets if it cannot reopen because of issues unrelated to an order imbalance, thereby enabling other markets to resume trading even if the primary market has not re-opened. The Exchange notes that if it re-opens the security after other markets have resumed trading, such reopening is subject to Rule 611(b)(3) of Regulation NMS as an exception to the Order Protection Rule.

The 10% or more move in price will be calculated every second by comparing each last consolidated sale price of a security ("Trigger Trade") during the preceding second to a reference price (the "Calculation Time"). For purposes of this calculation, the reference price shall be any transaction in that security printed to the Consolidated Tape during the five-minute period before the Calculation Time. Because the calculation period begins at 6:45 a.m., trades occurring after 6:45 a.m. may be a Trigger Trade, however, the reference price(s) for such Trigger Trades will begin at 6:45 a.m. In such case, in the first five minutes of the calculation period, the reference prices for a Trigger Trade will not be based on five minutes of trading in that security. For example, a trade at 6:45:05 will be compared only to trades between 6:45:00 and 6:45:05. The last potential Trigger Trade will be at 12:35 p.m., so that such Trading Pause will end at 12:40 p.m.

As proposed, only regular way, in-sequence transactions qualify as either a Trigger Trade or a reference price. To ensure that erroneous executions do not trigger a Trading Pause, the Exchange also proposes that it can exclude a transaction price from use as a reference price or Trigger Trade if it concludes that the transaction price resulted from an erroneous execution.

The proposed rule further provides that if a Trading Pause is triggered, the

---

[8] The Commission believes that a 10-day comment period is reasonable, given the urgency of the matter. It will provide adequate time for comment.

[9] 17 CFR 200.30–3(a)(12).

[1] 15 U.S.C. 78s(b)(1).

[2] 17 CFR 240.19b–4.

Exchange will immediately notify the single plan processor responsible for consolidation of information for the security.

In addition, if the listing market for a security that trades on the Exchange on an unlisted trading privilege basis pauses under its respective rules, the Exchange will also pause trading in that security until the listing market has either resumed trading or the Exchange has received notice from the primary listing market that trading may resume. If the primary listing market does not reopen trading in the security within 10 minutes of notification of a trading pause, the Exchange may resume trading of the security.

2. Statutory Basis

The statutory basis for the proposed rule change is Section 6(b)(5) of the Securities Exchange Act of 1934 (the "Act"),[3] which requires the rules of an exchange to promote just and equitable principles of trade, to remove impediments to and perfect the mechanism of a free and open market and a national market system and, in general, to protect investors and the public interest. The proposed rule change also is designed to support the principles of Section 11A(a)(1)[4] of the Act in that it seeks to assure fair competition among brokers and dealers and among exchange markets. The Exchange believes that the proposed rule meets these requirements in that it promotes transparency and uniformity across markets concerning decisions to pause trading in a security when there are significant price movements.

B. Self-Regulatory Organization's Statement on Burden on Competition

The Exchange does not believe that the proposed rule change will impose any burden on competition that is not necessary or appropriate in furtherance of the purposes of the Act.

C. Self-Regulatory Organization's Statement on Comments on the Proposed Rule Change Received From Members, Participants or Others

No written comments were solicited or received with respect to the proposed rule change.

III. Date of Effectiveness of the Proposed Rule Change and Timing for Commission Action

Within 35 days of the date of publication of this notice in the **Federal Register** or within such longer period (i) as the Commission may designate up to 90 days of such date if it finds such longer period to be appropriate and publishes its reasons for so finding or (ii) as to which the self-regulatory organization consents, the Commission will:

(A) by order approve the proposed rule change, or

(B) institute proceedings to determine whether the proposed rule change should be disapproved.[5]

IV. Solicitation of Comments

Interested persons are invited to submit written data, views, and arguments concerning the foregoing, including whether the proposed rule change is consistent with the Act. Comments may be submitted by any of the following methods:

Electronic Comments

- Use the Commission's Internet comment form (*http://www.sec.gov/rules/sro.shtml*); or
- Send an e-mail to *rule-comments@sec.gov.* Please include File Number SR–NYSEArca–2010–41 on the subject line.

Paper Comments

- Send paper comments in triplicate to Elizabeth M. Murphy, Secretary, Securities and Exchange Commission, Station Place, 100 F Street, NE., Washington, DC 20549–1090.

All submissions should refer to File Number SR–NYSEArca-2010–41. This file number should be included on the subject line if e-mail is used. To help the Commission process and review your comments more efficiently, please use only one method. The Commission will post all comments on the Commission's Internet Web site (*http://www.sec.gov/rules/sro.shtml*). Copies of the submission, all subsequent amendments, all written statements with respect to the proposed rule change that are filed with the Commission, and all written communications relating to the proposed rule change between the Commission and any person, other than those that may be withheld from the public in accordance with the provisions of 5 U.S.C. 552, will be available for Web site viewing and printing in the Commission's Public Reference Room, 100 F Street, NE., Washington, DC 20549, on official business days between the hours of 10 a.m. and 3 p.m. Copies of such filing also will be available for inspection and copying at the principal office of NYSE Arca. All comments received will be posted without change; the Commission does not edit personal identifying information from submissions. You should submit only information that you wish to make publicly available. All submissions should refer to File Number SR–NYSEArca–2010–41 and should be submitted on or before June 3, 2010.[6]

For the Commission, by the Division of Trading and Markets, pursuant to delegated authority.[7]

Florence E. Harmon,

Deputy Secretary.

[FR Doc. 2010–12421 Filed 5–21–10; 8:45 am]

BILLING CODE 8010–01–P

[3] 15 U.S.C. 78f(b)(5).

[4] 15 U.S.C. 78k–1(a)(1).

[5] The Commission notes that the Exchange has requested accelerated approval of the filing.

[6] The Commission believes that a 10-day comment period is reasonable, given the urgency of the matter. It will provide adequate time for comment.

[7] 17 CFR 200.30–3(a)(12).

SECURITIES AND EXCHANGE COMMISSION

[Release No. 34–62126; File No. SR–NYSE–2010–39]

Self-Regulatory Organizations; New York Stock Exchange LLC; Notice of Filing of a Proposed Rule Change Adding Rule 80C To Provide for a Trading Pause for Individual Securities When the Price Moves 10 Percent or More

May 19, 2010.

Pursuant to Section 19(b)(1) of the Securities Exchange Act of 1934 ("Act")[1] and Rule 19b–4 thereunder,[2] notice is hereby given that on May 18, 2010, New York Stock Exchange LLC ("NYSE" or the "Exchange") filed with the Securities and Exchange Commission ("Commission") the proposed rule change as described in Items I, II, and III below, which Items have been prepared by NYSE. The Commission is publishing this notice to solicit comments on the proposed rule change from interested persons.

I. Self-Regulatory Organization's Statement of the Terms of Substance of the Proposed Rule Change

The Exchange proposes to add Rule 80C to provide for a trading pause for individual securities when the price moves 10 percent or more. A copy of this filing is available on the Exchange's Web site at *http://www.nyse.com*, at the Exchange's principal office, and at the Commission's Public Reference Room.

[1] 15 U.S.C. 78s(b)(1).

[2] 17 CFR 240.19b–4.

II. Self-Regulatory Organization's Statement of the Purpose of, and Statutory Basis for, the Proposed Rule Change

In its filing with the Commission, the self-regulatory organization included statements concerning the purpose of, and basis for, the proposed rule change and discussed any comments it received on the proposed rule change. The text of those statements may be examined at the places specified in Item IV below. The Exchange has prepared summaries, set forth in sections A, B, and C below, of the most significant parts of such statements.

A. Self-Regulatory Organization's Statement of the Purpose of, and Statutory Basis for, the Proposed Rule Change

1. Purpose

The Exchange proposes to add Rule 80C to provide for a trading pause for individual securities for which the Exchange is the primary listing market if the price of such security moves 10% or more from a sale in a preceding five-minute period. The Exchange is proposing this rule addition in consultation with other markets and staff of the Securities and Exchange Commission to provide for uniform market-wide trading pause standards for individual securities in the S&P 500® Index that experience rapid price movement, as set forth below.

The Exchange is proposing that this rule be implemented on a pilot basis, set to end on December 10, 2010. During this pilot period, the rule would be in effect only with respect to securities included in the S&P 500® Index. During that pilot period, the Exchange will continue to assess whether additional securities need to be added and whether the parameters of the rule would need to be modified to accommodate trading characteristics of different securities.

As proposed, Rule 80C would enable the Exchange to pause trading in an individual security listed on the Exchange if the price moves by 10% as compared to prices of that security in the preceding five-minute period during a trading day, which period is defined as a "Trading Pause." To enable the market to absorb the opening price of a security and to participate in the close, as proposed, the proposed rule would be in effect from 9:45 a.m. to 3:35 p.m., Eastern Time.

Proposed Rule 80C(b) sets forth the re-opening procedures following a Trading Pause. As proposed, Designated Market Makers ("DMM") at the Exchange would be responsible for re-opening trading at the end of the Trading Pause in a manner similar to existing procedures set forth in Rule 123D, subject to specified revisions. First, unlike the regular procedures for publishing indications after a halt, an indication shall be published as close to the beginning of the Trading Pause as possible and such indications shall be updated until the security has re-opened. Note, however, that the security may re-open even if the DMM does not have an opportunity to update an indication to reflect changes to order flow before the re-opening time. Second, any re-openings following a Trading Pause are not subject to the requirements that (i) a minimum of three minutes must elapse between the first indication and a security's re-opening, or (ii) if more than one indication is published, a minimum of one minute must elapse before a security's re-opening. Third, the Exchange shall publish Order Imbalance Information, as defined in Rule 15(c), approximately every 15 seconds following the imposition of the Trading Pause until the security re-opens.

Unlike a re-opening following a regulatory halt, the re-opening of a security following a Trading Pause shall be at the end of the Trading Pause. Such re-opening may be either on a trade or a quote. However, in the event of a significant imbalance, the Exchange may delay the re-opening of the security past the five-minute Trading Pause period. The Exchange will notify other markets if it cannot reopen because of issues unrelated to an order imbalance, thereby enabling other markets to resume trading even if the primary market has not re-opened. The Exchange notes that if it re-opens the security after other markets have resumed trading, such reopening is subject to Rule 611(b)(3) of Regulation NMS as an exception to the Order Protection Rule.

The 10% or more move in price will be calculated every second by comparing each last consolidated sale price of a security ("Trigger Trade") during the preceding second to a reference price (the "Calculation Time"). For purposes of this calculation, the reference price shall be any transaction in that security printed to the Consolidated Tape during the five-minute period before the Calculation Time. Because the calculation period begins at 9:45 a.m., trades occurring after 9:45 a.m. may be a Trigger Trade, however, the reference price(s) for such Trigger Trades will begin at 9:45 a.m. In such case, in the first five minutes of the calculation period, the reference prices for a Trigger Trade will not be based on five minutes of trading in that security. For example, a trade at 9:45:05 will be compared only to trades between 9:45:00 and 9:45:05. The last potential Trigger Trade will be at 3:35 p.m., so that such Trading Pause will end at 3:40 p.m.

As proposed, only regular way, in-sequence transactions qualify as either a Trigger Trade or a reference price. To ensure that erroneous executions do not trigger a Trading Pause, the Exchange also proposes that it can exclude a transaction price from use as a reference price or Trigger Trade if it concludes that the transaction price resulted from an erroneous execution.

The proposed rule further provides that if a Trading Pause is triggered, the Exchange will immediately notify the single plan processor responsible for consolidation of information for the security.

The Exchange further proposes to include in the rule that if the listing market for a security that trades on the Exchange on an unlisted trading privilege ("UTP") basis pauses under its respective rules, the Exchange will also pause trading in that security until the listing market has either resumed trading or the Exchange has received notice from the primary listing market that trading may resume. If the primary listing market does not reopen trading in the security within 10 minutes of notification of a trading pause, the Exchange may resume trading of the security. While the Exchange does not currently trade any securities on a UTP basis, the Exchange is including this provision both to maintain uniformity across the "trading pause" rules adopted by multiple markets and to ensure that if the Exchange does implement a UTP program, this rule will already be in place.

2. Statutory Basis

The statutory basis for the proposed rule change is Section 6(b)(5) of the Securities Exchange Act of 1934 (the "Act"),[3] which requires the rules of an exchange to promote just and equitable principles of trade, to remove impediments to and perfect the mechanism of a free and open market and a national market system and, in general, to protect investors and the public interest. The proposed rule change also is designed to support the principles of Section 11A(a)(1)[4] of the Act in that it seeks to assure fair competition among brokers and dealers and among exchange markets. The Exchange believes that the proposed rule meets these requirements in that it promotes transparency and uniformity

[3] 15 U.S.C. 78f(b)(5).

[4] 15 U.S.C. 78k–1(a)(1).

across markets concerning decisions to pause trading in a security when there are significant price movements.

B. Self-Regulatory Organization's Statement on Burden on Competition

The Exchange does not believe that the proposed rule change will impose any burden on competition that is not necessary or appropriate in furtherance of the purposes of the Act.

C. Self-Regulatory Organization's Statement on Comments on the Proposed Rule Change Received From Members, Participants or Others

No written comments were solicited or received with respect to the proposed rule change.

III. Date of Effectiveness of the Proposed Rule Change and Timing for Commission Action

Within 35 days of the date of publication of this notice in the **Federal Register** or within such longer period (i) as the Commission may designate up to 90 days of such date if it finds such longer period to be appropriate and publishes its reasons for so finding or (ii) as to which the self-regulatory organization consents, the Commission will:

(A) by order approve the proposed rule change, or

(B) institute proceedings to determine whether the proposed rule change should be disapproved.[5]

IV. Solicitation of Comments

Interested persons are invited to submit written data, views, and arguments concerning the foregoing, including whether the proposed rule change is consistent with the Act. Comments may be submitted by any of the following methods:

Electronic Comments

- Use the Commission's Internet comment form (*http://www.sec.gov/rules/sro.shtml*); or
- Send an e-mail to *rule-comments@sec.gov*. Please include File Number SR–NYSE–2010–39 on the subject line.

Paper Comments

- Send paper comments in triplicate to Elizabeth M. Murphy, Secretary, Securities and Exchange Commission, Station Place, 100 F Street, NE., Washington, DC 20549–1090.

All submissions should refer to File Number SR–NYSE–2010–39. This file number should be included on the subject line if e-mail is used. To help the Commission process and review your comments more efficiently, please use only one method. The Commission will post all comments on the Commission's Internet Web site (*http://www.sec.gov/rules/sro.shtml*). Copies of the submission, all subsequent amendments, all written statements with respect to the proposed rule change that are filed with the Commission, and all written communications relating to the proposed rule change between the Commission and any person, other than those that may be withheld from the public in accordance with the provisions of 5 U.S.C. 552, will be available for Web site viewing and printing in the Commission's Public Reference Room, 100 F Street, NE., Washington, DC 20549, on official business days between the hours of 10 a.m. and 3 p.m. Copies of such filing also will be available for inspection and copying at the principal office of NYSE. All comments received will be posted without change; the Commission does not edit personal identifying information from submissions. You should submit only information that you wish to make publicly available. All submissions should refer to File Number SR–NYSE–2010–39 and should be submitted on or before June 3, 2010.[6]

For the Commission, by the Division of Trading and Markets, pursuant to delegated authority.[7]

Florence E. Harmon,

Deputy Secretary.

[FR Doc. 2010–12418 Filed 5–21–10; 8:45 am]

BILLING CODE 8010–01–P

[5] The Commission notes that the Exchange has requested accelerated approval of the filing.

[6] The Commission believes that a 10-day comment period is reasonable, given the urgency of the matter. It will provide adequate time for comment.

[7] 17 CFR 200.30–3(a)(12).

SECURITIES AND EXCHANGE COMMISSION

[Release No. 34–62122; File No. SR–EDGA–2010–01]

Self-Regulatory Organizations; EDGA Exchange, Inc.; Notice of Filing of Proposed Rule Change To Amend EDGA Rule 11.14, Entitled "Trading Halts Due to Extraordinary Market Volatility"

May 19, 2010.

Pursuant to Section 19(b)(1) of the Securities Exchange Act of 1934 (the "Act"),[1] and Rule 19b-4 thereunder,[2] notice is hereby given that on May 19, 2010, EDGA Exchange, Inc. (the "Exchange" or "EDGA") filed with the Securities and Exchange Commission ("Commission") the proposed rule change as described in Items I and II below, which Items have been prepared by the Exchange. The Commission is publishing this notice to solicit comments on the proposed rule change from interested persons.

I. Self-Regulatory Organization's Statement of the Terms of Substance of the Proposed Rule Change

The Exchange is proposing to amend EDGA Rule 11.14, entitled "Trading Halts Due to Extraordinary Market Volatility."

The text of the proposed rule change is available at the Exchange's Web site at *http://www.directedge.com,* at the principal office of the Exchange, and at the Commission's Public Reference Room.

II. Self-Regulatory Organization's Statement of the Purpose of, and Statutory Basis for, the Proposed Rule Change

In its filing with the Commission, the Exchange included statements concerning the purpose of and basis for the proposed rule change and discussed any comments it received on the proposed rule change. The text of these statements may be examined at the places specified in Item IV below. The Exchange has prepared summaries, set forth in Sections A, B, and C below, of the most significant parts of such statements.

A. Self-Regulatory Organization's Statement of the Purpose of, and Statutory Basis for, the Proposed Rule Change

1. Purpose

The primary listing markets for U.S. stocks are in the process of amending their rules so that they may, from time to time, issue a trading pause for an individual security if the price of such security moves 10% or more from a sale in a preceding five-minute period. The Exchange is proposing the rule change described below in consultation with other markets and Commission staff to provide for uniform market-wide trading pause standards for individual securities in the S&P 500® Index that experience rapid price movement, as set forth below. The Exchange is not currently the primary listing market for any securities, and thus, will not be issuing any trading pauses pursuant to its rules.

The Exchange proposes to add a new paragraph to EDGA Rule 11.14 to allow

[1] 15 U.S.C. 78s(b)(1).

[2] 17 CFR 240.19b–4.

the Exchange to pause trading in an individual stock when the primary listing market for such stock issues a trading pause in any Circuit Breaker Securities, as defined below and in proposed Interpretation and Policy .05 of Rule 11.14. If, however, trading has not resumed on the primary listing market and ten minutes have passed since the individual stock trading pause message has been received from the responsible single plan processor, the Exchange may resume trading in such stock.

The proposed rule would apply to trading pauses issued by primary listing markets in "Circuit Breaker Securities", as defined in proposed Interpretation and Policy .05. Specifically, on a pilot basis, set to end on December 10, 2010, Circuit Breaker Securities would mean the securities included in the S&P 500® Index.

In addition to adding a new paragraph to Rule 11.14 as paragraph (d), and renaming existing paragraph (d) as paragraph (e), the Exchange has also proposed minor changes to Rule 11.14. To make clear that the existing trading halt described in Rule 11.14 applies to all stocks traded on the Exchange, the Exchange has added the word "all" to the text of paragraphs (a) and (b) of Rule 11.14. Finally, the Exchange has proposed certain minor changes to the references in its rules, specifically: (1) Deleting references to the number of the Rule to avoid inaccurate cross-references in the event there are other changes to the Exchange's Rules; and (2) renaming sections .01 to .04 and proposed section .05 of the Rule as "Interpretations and Policies" rather than "Commentary" to be consistent with the rest of the Exchange's rules.

2. Statutory Basis

Approval of the rule change proposed in this submission is consistent with the requirements of the Act and the rules and regulations thereunder that are applicable to a national securities exchange, and, in particular, with the requirements of Section 6(b) of the Act.[3] In particular, the proposed change is consistent with Section 6(b)(5) of the Act,[4] because it would promote just and equitable principles of trade, remove impediments to, and perfect the mechanism of, a free and open market and a national market system, and, in general, protect investors and the public interest. The proposed rule change is also designed to support the principles of Section 11A(a)(1)[5] of the Act in that it seeks to assure fair competition among brokers and dealers and among exchange markets. The Exchange believes that the proposed rule meets these requirements in that it promotes transparency and uniformity across markets concerning decisions to pause trading in a security when there are significant price movements.

B. Self-Regulatory Organization's Statement on Burden on Competition

The Exchange does not believe that the proposed rule change imposes any burden on competition.

C. Self-Regulatory Organization's Statement on Comments on the Proposed Rule Change Received From Members, Participants or Others

The Exchange has neither solicited nor received written comments on the proposed rule change.

III. Date of Effectiveness of the Proposed Rule Change and Timing for Commission Action

Within 35 days of the date of publication of this notice in the **Federal Register** or within such longer period (i) as the Commission may designate up to 90 days of such date if it finds such longer period to be appropriate and publishes its reasons for so finding or (ii) as to which the self-regulatory organization consents, the Commission will:

(A) By order approve the proposed rule change, or

(B) Institute proceedings to determine whether the proposed rule change should be disapproved.[6]

IV. Solicitation of Comments

Interested persons are invited to submit written data, views, and arguments concerning the foregoing, including whether the proposed rule change is consistent with the Exchange Act. Comments may be submitted by any of the following methods:

Electronic Comments

- Use the Commission's Internet comment form (*http://www.sec.gov/rules/sro.shtml*); or
- Send an e-mail to *rule-comments@sec.gov.* Please include File Number SR–EDGA–2010–01 on the subject line.

Paper Comments

- Send paper comments in triplicate to Elizabeth M. Murphy, Secretary, Securities and Exchange Commission, 100 F Street, NE., Washington, DC 20549–1090.

All submissions should refer to File Number SR–EDGA–2010–01. This file number should be included on the subject line if e-mail is used. To help the Commission process and review your comments more efficiently, please use only one method. The Commission will post all comments on the Commission's Internet Web site (*http://www.sec.gov/rules/sro.shtml*). Copies of the submission, all subsequent amendments, all written statements with respect to the proposed rule change that are filed with the Commission, and all written communications relating to the proposed rule change between the Commission and any person, other than those that may be withheld from the public in accordance with the provisions of 5 U.S.C. 552, will be available for Web site viewing and printing in the Commission's Public Reference Room, 100 F Street, NE., Washington, DC 20549, on official business days between the hours of 10 a.m. and 3 p.m. Copies of the filing also will be available for inspection and copying at the principal office of the Exchange. All comments received will be posted without change; the Commission does not edit personal identifying information from submissions. You should submit only information that you wish to make available publicly. All submissions should refer to File Number SR–EDGA–2010–01 and should be submitted on or before June 3, 2010.[7]

For the Commission, by the Division of Trading and Markets, pursuant to delegated authority.[8]

Florence E. Harmon,

Deputy Secretary.

[FR Doc. 2010–12413 Filed 5–21–10; 8:45 am]

BILLING CODE 8010–01–P

SECURITIES AND EXCHANGE COMMISSION

[Release No. 34–62121; File No. SR–BATS–2010–014]

Self-Regulatory Organizations; BATS Exchange, Inc.; Notice of Filing of Proposed Rule Change To Amend BATS Rule 11.18, Entitled "Trading Halts Due to Extraordinary Market Volatility"

May 19, 2010.

Pursuant to Section 19(b)(1) of the Securities Exchange Act of 1934 (the

[3] 15 U.S.C. 78f(b).

[4] 15 U.S.C. 78f(b)(5).

[5] 15 U.S.C. 78k–1(a)(1).

[6] The Commission notes that the Exchange has requested accelerated approval of the filing.

[7] The Commission believes that a 10-day comment period is reasonable, given the urgency of the matter. It will provide adequate time for comment.

[8] 17 CFR 200.30–3(a)(12).

"Act"),[1] and Rule 19b–4 thereunder,[2] notice is hereby given that on May 18, 2010, BATS Exchange, Inc. (the "Exchange" or "BATS") filed with the Securities and Exchange Commission ("Commission") the proposed rule change as described in Items I and II below, which Items have been prepared by the Exchange. The Commission is publishing this notice to solicit comments on the proposed rule change from interested persons.

I. Self-Regulatory Organization's Statement of the Terms of Substance of the Proposed Rule Change

The Exchange is proposing to amend BATS Rule 11.18, entitled "Trading Halts Due to Extraordinary Market Volatility."

The text of the proposed rule change is available at the Exchange's Web site at *http://www.batstrading.com,* at the principal office of the Exchange, and at the Commission's Public Reference Room.

II. Self-Regulatory Organization's Statement of the Purpose of, and Statutory Basis for, the Proposed Rule Change

In its filing with the Commission, the Exchange included statements concerning the purpose of and basis for the proposed rule change and discussed any comments it received on the proposed rule change. The text of these statements may be examined at the places specified in Item IV below. The Exchange has prepared summaries, set forth in Sections A, B, and C below, of the most significant parts of such statements.

A. Self-Regulatory Organization's Statement of the Purpose of, and Statutory Basis for, the Proposed Rule Change

1. Purpose

The primary listing markets for U.S. stocks are in the process of amending their rules so that they may, from time to time, issue a trading pause for an individual security if the price of such security moves 10% or more from a sale in a preceding five-minute period. The Exchange is proposing the rule change described below in consultation with other markets and Commission staff to provide for uniform market-wide trading pause standards for individual securities in the S&P 500® Index that experience rapid price movement, as set forth below. The Exchange is not currently the primary listing market for any securities, and thus, will not be issuing any trading pauses pursuant to its rules.

The Exchange proposes to add a new paragraph to BATS Rule 11.18 to allow the Exchange to pause trading in an individual stock when the primary listing market for such stock issues a trading pause in any Circuit Breaker Securities, as defined below and in proposed Interpretation and Policy .05 of Rule 11.18. If, however, trading has not resumed on the primary listing market and ten minutes have passed since the individual stock trading pause message has been received from the responsible single plan processor, the Exchange may resume trading in such stock.

The proposed rule would apply to trading pauses issued by primary listing markets in "Circuit Breaker Securities", as defined in proposed Interpretation and Policy .05. Specifically, on a pilot basis, set to end on December 10, 2010, Circuit Breaker Securities would mean the securities included in the S&P 500® Index.

In addition to adding a new paragraph to Rule 11.18 as paragraph (d), and renaming existing paragraph (d) as paragraph (e), the Exchange has also proposed minor changes to Rule 11.18. To make clear that the existing trading halt described in Rule 11.18 applies to all stocks traded on the Exchange, the Exchange has added the word "all" to the text of paragraphs (a) and (b) of Rule 11.18. Finally, the Exchange has proposed certain minor changes to the references in its rules, specifically: (1) Deleting references to the number of the Rule to avoid inaccurate cross-references in the event there are other changes to the Exchange's Rules; and (2) renaming sections .01 to .04 and proposed section .05 of the Rule as "Interpretations and Policies" rather than "Commentary" to be consistent with the rest of the Exchange's rules.

2. Statutory Basis

Approval of the rule change proposed in this submission is consistent with the requirements of the Act and the rules and regulations thereunder that are applicable to a national securities exchange, and, in particular, with the requirements of Section 6(b) of the Act.[3] In particular, the proposed change is consistent with Section 6(b)(5) of the Act,[4] because it would promote just and equitable principles of trade, remove impediments to, and perfect the mechanism of, a free and open market and a national market system, and, in general, protect investors and the public interest. The proposed rule change is also designed to support the principles of Section 11A(a)(1)[5] of the Act in that it seeks to assure fair competition among brokers and dealers and among exchange markets. The Exchange believes that the proposed rule meets these requirements in that it promotes transparency and uniformity across markets concerning decisions to pause trading in a security when there are significant price movements.

B. Self-Regulatory Organization's Statement on Burden on Competition

The Exchange does not believe that the proposed rule change imposes any burden on competition.

C. Self-Regulatory Organization's Statement on Comments on the Proposed Rule Change Received From Members, Participants or Others

The Exchange has neither solicited nor received written comments on the proposed rule change.

III. Date of Effectiveness of the Proposed Rule Change and Timing for Commission Action

Within 35 days of the date of publication of this notice in the **Federal Register** or within such longer period (i) as the Commission may designate up to 90 days of such date if it finds such longer period to be appropriate and publishes its reasons for so finding or (ii) as to which the self-regulatory organization consents, the Commission will:

(A) By order approve the proposed rule change, or

(B) Institute proceedings to determine whether the proposed rule change should be disapproved.[6]

IV. Solicitation of Comments

Interested persons are invited to submit written data, views, and arguments concerning the foregoing, including whether the proposed rule change is consistent with the Exchange Act. Comments may be submitted by any of the following methods:

Electronic Comments

- Use the Commission's Internet comment form (*http://www.sec.gov/rules/sro.shtml*); or
- Send an e-mail to *rule-comments@sec.gov.* Please include File Number SR–BATS–2010–014 on the subject line.

[1] 15 U.S.C. 78s(b)(1).

[2] 17 CFR 240.19b–4.

[3] 15 U.S.C. 78f(b).

[4] 15 U.S.C. 78f(b)(5).

[5] 15 U.S.C. 78k–1(a)(1).

[6] The Commission notes that the Exchange has requested accelerated approval of the filing.

Paper Comments

- Send paper comments in triplicate to Elizabeth M. Murphy, Secretary, Securities and Exchange Commission, 100 F Street, NE., Washington, DC 20549–1090.

All submissions should refer to File Number SR–BATS–2010–014. This file number should be included on the subject line if e-mail is used. To help the Commission process and review your comments more efficiently, please use only one method. The Commission will post all comments on the Commission's Internet Web site (*http://www.sec.gov/rules/sro.shtml*). Copies of the submission, all subsequent amendments, all written statements with respect to the proposed rule change that are filed with the Commission, and all written communications relating to the proposed rule change between the Commission and any person, other than those that may be withheld from the public in accordance with the provisions of 5 U.S.C. 552, will be available for Web site viewing and printing in the Commission's Public Reference Room, 100 F Street, NE., Washington, DC 20549, on official business days between the hours of 10 a.m. and 3 p.m. Copies of the filing also will be available for inspection and copying at the principal office of the Exchange. All comments received will be posted without change; the Commission does not edit personal identifying information from submissions. You should submit only information that you wish to make available publicly. All submissions should refer to File Number SR–BATS–2010–014 and should be submitted on or before June 3, 2010.[7]

For the Commission, by the Division of Trading and Markets, pursuant to delegated authority.[8]

Florence E. Harmon,

Deputy Secretary.

[FR Doc. 2010–12412 Filed 5–21–10; 8:45 am]

BILLING CODE 8010–01–P

[7] The Commission believes that a 10-day comment period is reasonable, given the urgency of the matter. It will provide adequate time for comment.

[8] 17 CFR 200.30–3(a)(12).

SECURITIES AND EXCHANGE COMMISSION

[Release No. 34–62125; File No. SR–ISE–2010–48]

Self-Regulatory Organizations; Notice of Filing of Proposed Rule Change by International Securities Exchange LLC To Amend ISE Rule 2102 To Provide for a Trading Pause for Individual Securities When the Price Moves Ten Percent or More

May 19, 2010.

Pursuant to Section 19(b)(1) of the Securities Exchange Act of 1934 (the "Act"),[1] and Rule 19b-4 thereunder,[2] notice is hereby given that on May 18, 2010, the International Securities Exchange, LLC (the "Exchange" or "ISE" or "self-regulatory organization") filed with the Securities and Exchange Commission ("Commission") the proposed rule change as described in Items I and II below, which items have been prepared by the self-regulatory organization. The Commission is publishing this notice to solicit comments on the proposed rule change from interested persons.

I. Self-Regulatory Organization's Statement of the Terms of Substance of the Proposed Rule Change

The Exchange proposes to amend Rule 2102 (Hours of Business) to provide for a trading pause for individual securities when the price moves 10 percent or more.

The text of the proposed rule change is available on the Exchange's Internet Web site at *http://www.ise.com*, at the principal office of the Exchange, and at the Commission's Public Reference Room.

II. Self-Regulatory Organization's Statement of the Purpose of, and Statutory Basis for, the Proposed Rule Change

In its filing with the Commission, the self-regulatory organization included statements concerning the purpose of, and basis for, the proposed rule change and discussed any comments it received on the proposed rule change. The text of these statements may be examined at the places specified in Item IV below. The self-regulatory organization has prepared summaries, set forth in sections A, B and C below, of the most significant aspects of such statements.

[1] 15 U.S.C. 78s(b)(1).

[2] 17 CFR 240.19b–4.

A. Self-Regulatory Organization's Statement of the Purpose of, and Statutory Basis for, the Proposed Rule Change

1. Purpose

The Exchange proposes to add a new paragraph to ISE Rule 2102 to allow the Exchange to pause trading in an individual stock when the primary listing market for such stock issues a trading pause. The primary listing markets for U.S. stocks are in the process of amending their rules so that they may, from time to time, issue a trading pause for an individual security if the price of such security moves 10% or more from a sale in a preceding five-minute period. The Exchange is proposing this rule change in consultation with U.S. listing markets and the Securities and Exchange Commission ("Commission") staff to provide for uniform market-wide trading pause standards for individual securities included in the S&P 500® Index. The Exchange is not currently the primary listing market for any securities, and thus, will not be issuing any trading pauses pursuant to its rules. As proposed, the Exchange will pause trading in that stock until trading has resumed on the primary listing market. The Exchange is proposing that this rule be implemented as a pilot, beginning on June 7, 2010 and concluding on December 10, 2010. This pilot program will provide the exchanges with an opportunity to assess the effect of this rule proposal on the markets.

2. Statutory Basis

The statutory basis for the proposed rule change is Section 6(b)(5) of the Act,[3] which requires the rules of an exchange to promote just and equitable principles of trade, to remove impediments to and perfect the mechanism of a free and open market and a national market system and, in general, to protect investors and the public interest. The proposed rule change also is designed to support the principles of Section 11A(a)(1)[4] of the Act in that it seeks to assure fair competition among brokers and dealers and among exchange markets. The Exchange believes that the proposed rule meets these requirements in that it promotes transparency and uniformity across markets concerning decisions to pause trading in a security when there are significant price movements.

[3] 15 U.S.C. 78f(b)(5).

[4] 15 U.S.C. 78k–1(a)(1).

B. Self-Regulatory Organization's Statement on Burden on Competition

The proposed rule change does not impose any burden on competition that is not necessary or appropriate in furtherance of the purposes of the Act.

C. Self-Regulatory Organization's Statement on Comments on the Proposed Rule Change Received From Members, Participants or Others

The Exchange has not solicited, and does not intend to solicit, comments on this proposed rule change. The Exchange has not received any unsolicited written comments from members or other interested parties.

III. Date of Effectiveness of the Proposed Rule Change and Timing for Commission Action

Within 35 days of the date of publication of this notice in the **Federal Register** or within such longer period (i) as the Commission may designate up to 90 days of such date if it finds such longer period to be appropriate and publishes its reasons for so finding or (ii) as to which the self-regulatory organization consents, the Commission will:

(A) By order approve the proposed rule change, or

(B) Institute proceedings to determine whether the proposed rule change should be disapproved.[5]

IV. Solicitation of Comments

Interested persons are invited to submit written data, views, and arguments concerning the foregoing, including whether the proposed rule change is consistent with the Exchange Act. Comments may be submitted by any of the following methods:

Electronic Comments

- Use the Commission's Internet comment form (*http://www.sec.gov/rules/sro.shtml*); or
- Send an e-mail to *rule-comments@sec.gov*. Please include File Number SR–ISE–2010–48 on the subject line.

Paper Comments

- Send paper comments in triplicate to Elizabeth M. Murphy, Secretary, Securities and Exchange Commission, 100 F Street, NE., Washington, DC 20549–1090.

All submissions should refer to File Number SR–ISE–2010–48. This file number should be included on the subject line if e-mail is used. To help the Commission process and review your comments more efficiently, please use only one method. The Commission will post all comments on the Commission's Internet Web site (*http://www.sec.gov/rules/sro.shtml*). Copies of the submission, all subsequent amendments, all written statements with respect to the proposed rule change that are filed with the Commission, and all written communications relating to the proposed rule change between the Commission and any person, other than those that may be withheld from the public in accordance with the provisions of 5 U.S.C. 552, will be available for Web site viewing and printing in the Commission's Public Reference Room, 100 F Street, NE., Washington, DC 20549, on official business days between the hours of 10 a.m. and 3 p.m. Copies of the filing also will be available for inspection and copying at the principal office of the Exchange. All comments received will be posted without change; the Commission does not edit personal identifying information from submissions. You should submit only information that you wish to make available publicly. All submissions should refer to File Number SR–ISE–2010–48 and should be submitted on or before June 3, 2010.[6]

For the Commission, by the Division of Trading and Markets, pursuant to delegated authority.[7]

Florence E. Harmon,

Deputy Secretary.

[FR Doc. 2010–12417 Filed 5–21–10; 8:45 am]

BILLING CODE 8010–01–P

[5] The Commission notes that the Exchange has requested accelerated approval of the filing.

[6] The Commission believes that a 10-day comment period is reasonable, given the urgency of the matter. It will provide adequate time for comment.

[7] 17 CFR 200.30–3(a)(12).

SECURITIES AND EXCHANGE COMMISSION

[Release No. 34–62127; File No. SR–NYSEAmex-2010–46]

Self-Regulatory Organizations; NYSE Amex LLC; Notice of Filing of a Proposed Rule Change Adding NYSE Amex Equities Rule 80C To Provide for a Trading Pause for Individual Securities When the Price Moves 10 Percent or More

May 19, 2010.

Pursuant to Section 19(b)(1) of the Securities Exchange Act of 1934 ("Act")[1] and Rule 19b–4 thereunder,[2] notice is hereby given that on May 18, 2010, NYSE Amex LLC ("NYSE Amex" or the "Exchange") filed with the Securities and Exchange Commission ("Commission") the proposed rule change as described in Items I, II, and III below, which Items have been prepared by NYSE Amex. The Commission is publishing this notice to solicit comments on the proposed rule change from interested persons.

I. Self-Regulatory Organization's Statement of the Terms of Substance of the Proposed Rule Change

The Exchange proposes to add NYSE Amex Equities Rule 80C to provide for a trading pause for individual securities when the price moves 10 percent or more. A copy of this filing is available on the Exchange's Web site at *http://www.nyse.com,* at the Exchange's principal office, and at the Commission's Public Reference Room.

II. Self-Regulatory Organization's Statement of the Purpose of, and Statutory Basis for, the Proposed Rule Change

In its filing with the Commission, the self-regulatory organization included statements concerning the purpose of, and basis for, the proposed rule change and discussed any comments it received on the proposed rule change. The text of those statements may be examined at the places specified in Item IV below. The Exchange has prepared summaries, set forth in sections A, B, and C below, of the most significant parts of such statements.

A. Self-Regulatory Organization's Statement of the Purpose of, and Statutory Basis for, the Proposed Rule Change

1. Purpose

The Exchange proposes to add NYSE Amex Equities Rule 80C to provide for a trading pause for individual securities for which the Exchange is the primary listing market if the price of such security moves 10% or more from a sale in a preceding five-minute period. The Exchange is proposing this rule addition in consultation with other markets and staff of the Securities and Exchange Commission to provide for uniform market-wide trading pause standards for individual securities in the S&P 500® Index that experience rapid price movement, as set forth below.

The Exchange is proposing that this rule be implemented on a pilot basis, set to end on December 10, 2010. During this pilot period, the rule would be in effect only with respect to securities included in the S&P 500® Index. During that pilot period, the Exchange will

[1] 15 U.S.C. 78s(b)(1).

[2] 17 CFR 240.19b–4.

continue to assess whether additional securities need to be added and whether the parameters of the rule would need to be modified to accommodate trading characteristics of different securities.

As proposed, NYSE Amex Equities Rule 80C would enable the Exchange to pause trading in an individual security listed on the Exchange if the price moves by 10% as compared to prices of that security in the preceding five-minute period during a trading day, which period is defined as a "Trading Pause." To enable the market to absorb the opening price of a security and to participate in the close, as proposed, the proposed rule would be in effect from 9:45 a.m. to 3:35 p.m., Eastern Time.

Proposed NYSE Amex Equities Rule 80C(b) sets forth the re-opening procedures following a Trading Pause. As proposed, Designated Market Makers ("DMM") at the Exchange would be responsible for re-opening trading at the end of the Trading Pause in a manner similar to existing procedures set forth in Rule 123D, subject to specified revisions. First, unlike the regular procedures for publishing indications after a halt, an indication shall be published as close to the beginning of the Trading Pause as possible and such indications shall be updated until the security has re-opened. Note, however, that the security may re-open even if the DMM does not have an opportunity to update an indication to reflect changes to order flow before the re-opening time. Second, any re-openings following a Trading Pause are not subject to the requirements that (i) a minimum of three minutes must elapse between the first indication and a security's re-opening, or (ii) if more than one indication is published, a minimum of one minute must elapse before a security's re-opening. Third, the Exchange shall publish Order Imbalance Information, as defined in Rule 15(c), approximately every 15 seconds following the imposition of the Trading Pause until the security re-opens.

Unlike a re-opening following a regulatory halt, the re-opening of a security following a Trading Pause shall be at the end of the Trading Pause. Such re-opening may be either on a trade or a quote. However, in the event of a significant imbalance, the Exchange may delay the re-opening of the security past the five-minute Trading Pause period. The Exchange will notify other markets if it cannot reopen because of issues unrelated to an order imbalance, thereby enabling other markets to resume trading even if the primary market has not re-opened. The Exchange notes that if it re-opens the security after other markets have resumed trading, such reopening is subject to Rule 611(b)(3) of Regulation NMS as an exception to the Order Protection Rule.

The 10% or more move in price will be calculated every second by comparing each last consolidated sale price of a security ("Trigger Trade") during the preceding second to a reference price (the "Calculation Time"). For purposes of this calculation, the reference price shall be any transaction in that security printed to the Consolidated Tape during the five-minute period before the Calculation Time. Because the calculation period begins at 9:45 a.m., trades occurring after 9:45 a.m. may be a Trigger Trade; however, the reference price(s) for such Trigger Trades will begin at 9:45 a.m. In such case, in the first five minutes of the calculation period, the reference prices for a Trigger Trade will not be based on five minutes of trading in that security. For example, a trade at 9:45:05 will be compared only to trades between 9:45:00 and 9:45:05. The last potential Trigger Trade will be at 3:35 p.m., so that such Trading Pause will end at 3:40 p.m.

As proposed, only regular way, in-sequence transactions qualify as either a Trigger Trade or a reference price. To ensure that erroneous executions do not trigger a Trading Pause, the Exchange also proposes that it can exclude a transaction price from use as a reference price or Trigger Trade if it concludes that the transaction price resulted from an erroneous execution.

The proposed rule further provides that if a Trading Pause is triggered, the Exchange will immediately notify the single plan processor responsible for consolidation of information for the security.

In addition, if the listing market for a security that trades on the Exchange on an unlisted trading privilege basis pauses under its respective rules, the Exchange will also pause trading in that security until the listing market has either resumed trading or the Exchange has received notice from the primary listing market that trading may resume. If the primary listing market does not reopen trading in the security within 10 minutes of notification of a trading pause, the Exchange may resume trading of the security.

2. Statutory Basis

The statutory basis for the proposed rule change is Section 6(b)(5) of the Securities Exchange Act of 1934 (the "Act"),[3] which requires the rules of an exchange to promote just and equitable principles of trade, to remove impediments to and perfect the mechanism of a free and open market and a national market system and, in general, to protect investors and the public interest. The proposed rule change also is designed to support the principles of Section 11A(a)(1)[4] of the Act in that it seeks to assure fair competition among brokers and dealers and among exchange markets. The Exchange believes that the proposed rule meets these requirements in that it promotes transparency and uniformity across markets concerning decisions to pause trading in a security when there are significant price movements.

B. Self-Regulatory Organization's Statement on Burden on Competition

The Exchange does not believe that the proposed rule change will impose any burden on competition that is not necessary or appropriate in furtherance of the purposes of the Act.

C. Self-Regulatory Organization's Statement on Comments on the Proposed Rule Change Received From Members, Participants or Others

No written comments were solicited or received with respect to the proposed rule change.

III. Date of Effectiveness of the Proposed Rule Change and Timing for Commission Action

Within 35 days of the date of publication of this notice in the **Federal Register** or within such longer period (i) as the Commission may designate up to 90 days of such date if it finds such longer period to be appropriate and publishes its reasons for so finding or (ii) as to which the self-regulatory organization consents, the Commission will:

(A) By order approve the proposed rule change, or

(B) Institute proceedings to determine whether the proposed rule change should be disapproved.[5]

IV. Solicitation of Comments

Interested persons are invited to submit written data, views, and arguments concerning the foregoing, including whether the proposed rule change is consistent with the Act. Comments may be submitted by any of the following methods:

Electronic Comments

- Use the Commission's Internet comment form (*http://www.sec.gov/rules/sro.shtml*); or

[3] 15 U.S.C. 78f(b)(5).

[4] 15 U.S.C. 78k–1(a)(1).

[5] The Commission notes that the Exchange has requested accelerated approval of the filing.

• Send an e-mail to *rule-comments@sec.gov.* Please include File Number SR–NYSEAmex–2010–46 on the subject line.

Paper Comments

• Send paper comments in triplicate to Elizabeth M. Murphy, Secretary, Securities and Exchange Commission, Station Place, 100 F Street, NE., Washington, DC 20549–1090.

All submissions should refer to File Number SR–NYSEAmex–2010–46. This file number should be included on the subject line if e-mail is used. To help the Commission process and review your comments more efficiently, please use only one method. The Commission will post all comments on the Commission's Internet Web site (*http://www.sec.gov/rules/sro.shtml*). Copies of the submission, all subsequent amendments, all written statements with respect to the proposed rule change that are filed with the Commission, and all written communications relating to the proposed rule change between the Commission and any person, other than those that may be withheld from the public in accordance with the provisions of 5 U.S.C. 552, will be available for Web site viewing and printing in the Commission's Public Reference Room, 100 F Street, NE., Washington, DC 20549, on official business days between the hours of 10 a.m. and 3 p.m. Copies of such filing also will be available for inspection and copying at the principal office of NYSE Amex. All comments received will be posted without change; the Commission does not edit personal identifying information from submissions. You should submit only information that you wish to make publicly available. All submissions should refer to File Number SR–NYSEAmex–2010–46 and should be submitted on or before June 3, 2010.[6]

For the Commission, by the Division of Trading and Markets, pursuant to delegated authority.[7]

Florence E. Harmon,

Deputy Secretary.

[FR Doc. 2010–12419 Filed 5–21–10; 8:45 am]

BILLING CODE 8010–01–P

[6] The Commission believes that a 10-day comment period is reasonable, given the urgency of the matter. It will provide adequate time for comment.

[7] 17 CFR 200.30–3(a)(12).

SECURITIES AND EXCHANGE COMMISSION

[Release No. 34–62129; File No. SR–NASDAQ–2010–061]

Self-Regulatory Organizations; The NASDAQ Stock Market LLC; Notice of Filing of a Proposed Rule Change To Establish a Trading Pause for Individual Stocks Contained in the Standard & Poor's 500 Index That Experience a Price Change of 10% or More During a Five-Minute Period

May 19, 2010.

Pursuant to Section 19(b)(1) of the Securities Exchange Act of 1934 ("Act") [1] and Rule 19b–4 thereunder,[2] notice is hereby given that on May 18, 2010, The NASDAQ Stock Market LLC ("Nasdaq" or the "Exchange") filed with the Securities and Exchange Commission ("Commission") the proposed rule change as described in Items I, II, and III below, which Items have been prepared by Nasdaq. The Commission is publishing this notice to solicit comments on the proposed rule change from interested persons.

I. Self-Regulatory Organization's Statement of the Terms of Substance of the Proposed Rule Change

The Exchange is filing with the Commission a proposed rule change to establish a trading pause for individual stocks contained in the Standard & Poor's 500 Index ("S&P 500") that experience a price change of 10% or more during a five-minute period.

The text of the proposed rule change is below. Proposed new language is in *italics* and proposed deletions are in [brackets].[3]

* * * * *

4120. Trading Halts

(a) Authority to Initiate Trading Halts *or Pauses*

In circumstances in which Nasdaq deems it necessary to protect investors and the public interest, Nasdaq, pursuant to the procedures set forth in paragraph (c):

(1)–(10) No Change.

(11) shall, between 9:45 a.m. and 3:35 p.m., immediately pause trading for 5 minutes in any Nasdaq-listed security when the price of such security moves 10 percent or more within a 5-minute period. At the end of the trading pause, Nasdaq will re-open the security using the Halt Cross process set forth in Nasdaq Rule 4753. In the event of a significant imbalance at the end of a trading pause, Nasdaq may delay the re-opening of a security.

Nasdaq will issue a notification if it cannot resume trading for a reason other than a significant imbalance.

Price moves under this paragraph will be calculated by changes in each consolidated last-sale price disseminated by a network processor over a five minute rolling period measured continuously. Only regular way in-sequence transactions qualify for use in calculations of price moves. Nasdaq can exclude a transaction price from use if it concludes that the transaction price resulted from an erroneous trade.

If a trading pause is triggered under this paragraph, Nasdaq shall immediately notify the single plan processor responsible for consolidation of information for the security pursuant to Rule 603 of Regulation NMS under the Securities Exchange Act of 1934. If a primary listing market issues an individual stock trading pause, Nasdaq will pause trading in that security until trading has resumed on the primary listing market or notice has been received from the primary listing market that trading may resume. If the primary listing market does not reopen within 10 minutes of notification of a trading pause, Nasdaq may resume trading the security.

The provisions of this paragraph shall only apply to securities in the Standard & Poor's 500 Index.

The provisions of this paragraph shall be in effect during a pilot set to end on December 10, 2010.

(b) No Change.

(c) Procedure for Initiating a Trading Halt

(1)–(6) No Change.

(7)

(A) A trading halt *or pause* initiated under Rule 4120(a)(1), (4), (5), (6), (9), [or] (10)*, (11)* or Rule 4120(b) shall be terminated when Nasdaq releases the security for trading. Prior to terminating the halt, there will be a 5-minute Display Only Period during which market participants may enter quotations and orders in that security in Nasdaq systems. At the conclusion of the 5-minute Display Only Period, the security shall be released for trading unless Nasdaq extends the Display Only Period for an additional 1-minute period pursuant to subparagraph (C) below. At the conclusion of the Display Only Period, trading shall immediately resume pursuant to Rule 4753.

(B) No Change.

(C) If at the end of a Display Only Period, Nasdaq detects a*n* [liquidity] *order* imbalance in the security, Nasdaq will extend the Display Only Period as permitted under subparagraphs (A) and (B) above. [Liquidity] Order [I]*i*mbalances shall be established when (i) the Current Reference Prices, as defined in Rule 4753(a)(2)(A), disseminated 15 seconds and immediately prior to the end of the Display Only Period differ by more than the greater of 5 percent or 50 cents, or (ii) all buy or sell market orders will not be executed in the cross.

* * * * *

4753. Nasdaq Halt and Imbalance Crosses

(a) No Change.

(b) Processing of Nasdaq Halt Cross. For Nasdaq-listed securities that are the subject of a trading halt *or pause* initiated pursuant

[1] 15 U.S.C. 78s(b)(1).

[2] 17 CFR 240.19b–4.

[3] Changes are marked to the rule text that appears in the electronic manual of NASDAQ found at *http://nasdaqomx.cchwallstreet.com.*

to Rule 4120(a)(1), (4), (5), (6) [or], (7)*or 11,* the Nasdaq Halt Cross shall occur at the time specified by Nasdaq pursuant to Rule 4120, and Market hours trading shall commence when the Nasdaq Halt Cross concludes.

(1)–(5) No Change.

(c)–(d) No Change.

* * * * *

II. Self-Regulatory Organization's Statement of the Purpose of, and Statutory Basis for, the Proposed Rule Change

In its filing with the Commission, the Exchange included statements concerning the purpose of and basis for the proposed rule change and discussed any comments it received on the proposed rule change. The text of these statements may be examined at the places specified in Item IV below. The Exchange has prepared summaries, set forth in Sections A, B, and C below, of the most significant aspects of such statements.

A. Self-Regulatory Organization's Statement of the Purpose of, and Statutory Basis for, the Proposed Rule Change

1. Purpose

Nasdaq proposes to adopt rules to provide for a trading pause for individual securities for which the Exchange is the primary listing market if the price of such security moves 10% or more from a sale in a preceding five-minute period. The Exchange is proposing this rule addition in consultation with other markets and staff of the Securities and Exchange Commission to provide for uniform market-wide trading pause standards for individual securities in the S&P 500® Index that experience a rapid price movement, as set forth below.

The Exchange is proposing that this rule be implemented on a pilot basis, set to end on December 10, 2010. During this pilot period, the rule would be in effect only with respect to securities included in the S&P 500® Index. During that pilot period, the Exchange will continue to assess whether additional securities need to be added and whether the parameters of the rule would need to be modified to accommodate trading characteristics of different securities.

As proposed, the rule would enable the Exchange to pause trading in an individual security listed on the Exchange if the price moves by 10% as compared to prices of that security in the preceding five-minute period during a trading day. To enable the market to absorb the opening price of a security and to participate in the close, as proposed, the proposed rule would be in effect from 9:45 a.m. to 3:35 p.m., Eastern Time.

Proposed Rule 4120(a)(11) sets forth the re-opening procedures following a trading pause. As proposed, NASDAQ would be responsible for re-opening trading at the end of the trading pause using existing procedures for the NASDAQ Halt Cross set forth in Rule 4753.

Unlike a re-opening following a regulatory halt, the re-opening of a security following a trading pause shall be at the end of the trading pause. However, in the event of a significant imbalance, the Exchange may delay the re-opening of the security past the five-minute trading pause period. The Exchange will notify other markets if it cannot reopen because of issues unrelated to an imbalance, thereby enabling other markets to resume trading even if the primary market has not re-opened. The Exchange notes that if it re-opens the security after other markets have resumed trading, such reopening is subject to Rule 611(b)(3) of Regulation NMS as an exception to the Order Protection Rule.

The 10% or more move in price will be calculated by changes in each consolidated last-sale price disseminated by a network processor over a five minute rolling period measured continuously. In the first five minutes of the calculation period, prices for comparison will not be based on five minutes of trading in that security. For example, a trade at 9:45:05 will be compared only to trades between 9:45:00 and 9:45:05. The last potential trade to trigger a pause will be at 3:35 p.m., so that such trading pause will end at 3:40 p.m.

As proposed, only regular way, in-sequence transactions qualify as [sic] use in price movement calculations. To attempt to ensure that erroneous executions do not trigger a trading pause, the Exchange also proposes that it can exclude a transaction price from use in calculating price movements if it concludes that the transaction price resulted from an erroneous execution.

The proposed rule further provides that if a trading pause is triggered, the Exchange will immediately notify the single plan processor responsible for consolidation of information for the security.

The Exchange further proposes to include in the rule that if the listing market for a security pauses under its respective rules, the Exchange will also pause trading in that security until the listing market has either resumed trading or the Exchange has received notice from the primary listing market that trading may resume. Moreover, if the primary listing market does not reopen trading in the security within 10 minutes of notification of a trading pause, the Exchange may resume trading of the security.

2. Statutory Basis

The statutory basis for the proposed rule change is Section 6(b)(5) of the Securities Exchange Act of 1934 (the "Act"),[4] which requires the rules of an exchange to promote just and equitable principles of trade, to remove impediments to and perfect the mechanism of a free and open market and a national market system and, in general, to protect investors and the public interest. The proposed rule change also is designed to support the principles of Section 11A(a)(1)[5] of the Act in that it seeks to ensure fair competition among brokers and dealers and among exchange markets. The Exchange believes that the proposed rule meets these requirements in that it promotes transparency and uniformity across markets concerning decisions to pause trading in a security when there are significant price movements.

B. Self-Regulatory Organization's Statement on Burden on Competition

The Exchange does not believe that the proposed rule change will result in any burden on competition that is not necessary or appropriate in furtherance of the purposes of the Act.

C. Self-Regulatory Organization's Statement on Comments on the Proposed Rule Change Received from Members, Participants or Others

Written comments on the proposed rule change were neither solicited nor received.

III. Date of Effectiveness of the Proposed Rule Change and Timing for Commission Action

Within 35 days of the date of publication of this notice in the **Federal Register** or within such longer period (i) as the Commission may designate up to 90 days of such date if it finds such longer period to be appropriate and publishes its reasons for so finding or (ii) as to which the self-regulatory organization consents, the Commission will:

(A) By order approve the proposed rule change, or

(B) Institute proceedings to determine whether the proposed rule change should be disapproved.[6]

[4] 15 U.S.C. 78f(b)(5).

[5] 15 U.S.C. 78k–1(a)(1).

[6] The Commission notes that the Exchange has requested accelerated approval of the filing.

IV. Solicitation of Comments

Interested persons are invited to submit written data, views, and arguments concerning the foregoing, including whether the proposed rule change is consistent with the Act. Comments may be submitted by any of the following methods:

Electronic Comments

- Use the Commission's Internet comment form (*http://www.sec.gov/rules/sro.shtml*); or
- Send an e-mail to *rule-comments@sec.gov.* Please include File Number SR–Nasdaq–2010–061 on the subject line.

Paper Comments

- Send paper comments in triplicate to Elizabeth M. Murphy, Secretary, Securities and Exchange Commission, Station Place, 100 F Street, NE., Washington, DC 20549–1090.

All submissions should refer to File Number SR–Nasdaq–2010–061. This file number should be included on the subject line if e-mail is used. To help the Commission process and review your comments more efficiently, please use only one method. The Commission will post all comments on the Commission's Internet Web site (*http://www.sec.gov/rules/sro.shtml*). Copies of the submission, all subsequent amendments, all written statements with respect to the proposed rule change that are filed with the Commission, and all written communications relating to the proposed rule change between the Commission and any person, other than those that may be withheld from the public in accordance with the provisions of 5 U.S.C. 552, will be available for Web site viewing and printing in the Commission's Public Reference Room, 100 F Street, NE., Washington, DC 20549, on official business days between the hours of 10 a.m. and 3 p.m. Copies of such filing also will be available for inspection and copying at the principal office of Nasdaq. All comments received will be posted without change; the Commission does not edit personal identifying information from submissions. You should submit only information that you wish to make publicly available. All submissions should refer to File Number SR–Nasdaq–2010–061 and should be submitted on or before June 3, 2010.[7]

For the Commission, by the Division of Trading and Markets, pursuant to delegated authority.[8]

Florence E. Harmon,

Deputy Secretary.

[FR Doc. 2010–12422 Filed 5–21–10; 8:45 am]

BILLING CODE 8010–01–P

[7] The Commission believes that a 10-day comment period is reasonable, given the urgency of the matter. It will provide adequate time for comment.

[8] 17 CFR 200.30–3(a)(12).

SECURITIES AND EXCHANGE COMMISSION

[Release No. 34–62133; File No. SR–FINRA–2010–025]

Self-Regulatory Organizations; Financial Industry Regulatory Authority, Inc.; Notice of Filing of Proposed Rule Change To Amend FINRA Rule 6121 (Trading Halts Due to Extraordinary Market Volatility)

May 19, 2010.

Pursuant to Section 19(b)(1) of the Securities Exchange Act of 1934 ("Act")[1] and Rule 19b–4 thereunder,[2] notice is hereby given that on May 18, 2010, Financial Industry Regulatory Authority, Inc. ("FINRA") filed with the Securities and Exchange Commission ("SEC" or "Commission") the proposed rule change as described in Items I, II, and III below, which Items have been prepared by FINRA. The Commission is publishing this notice to solicit comments on the proposed rule change from interested persons.

I. Self-Regulatory Organization's Statement of the Terms of Substance of the Proposed Rule Change

FINRA is proposing to amend FINRA Rule 6121 (Trading Halts Due to Extraordinary Market Volatility) to permit FINRA to halt trading by FINRA members otherwise than on an exchange where a primary listing market has issued a trading pause due to extraordinary market conditions.

The text of the proposed rule change is available on FINRA's Web site at *http://www.finra.org,* at the principal office of FINRA and at the Commission's Public Reference Room.

II. Self-Regulatory Organization's Statement of the Purpose of, and Statutory Basis for, the Proposed Rule Change

In its filing with the Commission, FINRA included statements concerning the purpose of and basis for the proposed rule change and discussed any comments it received on the proposed rule change. The text of these statements may be examined at the places specified in Item IV below. FINRA has prepared summaries, set forth in sections A, B, and C below, of the most significant aspects of such statements.

A. Self-Regulatory Organization's Statement of the Purpose of, and Statutory Basis for, the Proposed Rule Change

1. Purpose

In October 2008, FINRA adopted FINRA Rule 6121 (Trading Halts Due to Extraordinary Market Volatility) to permit FINRA to halt over-the-counter ("OTC") trading of NMS stocks[3] if other major U.S. securities markets initiate market-wide trading halts in response to their rules or extraordinary market conditions or if otherwise directed by the SEC.[4] This proposed rule change was designed to further the goal of coordinated self-regulatory organization ("SRO") action to address potentially destabilizing market volatility, consistent with the circuit breaker trading halt authority of the exchanges.

On May 18, 2010, several national securities exchanges filed new rules with the Commission to provide the exchanges with authority to issue trading pauses for individual securities if the price of such security moves 10% or more from a sale in a preceding five-minute period. These changes would provide uniform market-wide trading pause standards for individual securities in the S&P 500® Index that experience a rapid price movement. Consistent with the exchanges' proposals and in consultation with the staff of the Commission, FINRA is proposing to amend FINRA Rule 6121 to add new Supplementary Material .01 to provide that if a primary listing market has issued an individual stock trading pause under its rules, FINRA will halt trading otherwise than on an exchange in that security until trading has resumed on the primary listing market. If, however, trading has not resumed on the primary listing market and ten minutes have passed since the individual stock trading pause message has been received from the responsible single plan processor or the primary listing market has issued notice that it cannot resume trading for a reason other than a significant imbalance, FINRA may permit the resumption of trading otherwise than on an exchange if trading has commenced on at least one other national securities exchange.

[1] 15 U.S.C. 78s(b)(1).

[2] 17 CFR 240.19b–4.

[3] NMS stock means any NMS security other than an option. *See* SEC Rule 600 of Regulation NMS.

[4] *See* Securities Exchange Act Release No. 58753 (October 8, 2008), 73 FR 61177 (October 15, 2008) (Notice of Filing and Immediate Effectiveness of File No. SR–FINRA–2008–048).

Consistent with the exchanges, FINRA is proposing that this rule be implemented as a pilot set to end on December 10, 2010, so that the markets may assess the effect of the new rules on the markets. During this pilot period, the rule would be in effect only with respect to securities included in the S&P 500® Index.

FINRA has requested that the Commission approve the proposed rule change on an accelerated basis, so that it may become operative on June 7, 2010, and fully rolled out across all eligible securities by June 14, 2010.

2. Statutory Basis

FINRA believes that the proposed rule change is consistent with the provisions of Section 15A(b)(6) of the Act,[5] which requires, among other things, that FINRA rules must be designed to prevent fraudulent and manipulative acts and practices, to promote just and equitable principles of trade and, in general, to protect investors and the public interest. FINRA believes that the proposed rule change is consistent with the trading pause rules of other SROs and will promote the goal of investor protection by further providing for a coordinated means to address potentially destabilizing market volatility.

B. Self-Regulatory Organization's Statement on Burden on Competition

FINRA does not believe that the proposed rule change will result in any burden on competition that is not necessary or appropriate in furtherance of the purposes of the Act.

C. Self-Regulatory Organization's Statement on Comments on the Proposed Rule Change Received From Members, Participants, or Others

Written comments were neither solicited nor received.

III. Date of Effectiveness of the Proposed Rule Change and Timing for Commission Action

Within 35 days of the date of publication of this notice in the **Federal Register** or within such longer period (i) as the Commission may designate up to 90 days of such date if it finds such longer period to be appropriate and publishes its reasons for so finding or (ii) as to which the self-regulatory organization consents, the Commission will:

(A) By order approve such proposed rule change, or

(B) Institute proceedings to determine whether the proposed rule change should be disapproved.[6]

IV. Solicitation of Comments

Interested persons are invited to submit written data, views and arguments concerning the foregoing, including whether the proposed rule change is consistent with the Act. Comments may be submitted by any of the following methods:

Electronic Comments

- Use the Commission's Internet comment form (*http://www.sec.gov/rules/sro.shtml*); or
- Send an e-mail to *rule-comments@sec.gov.* Please include File Number SR–FINRA–2010–025 on the subject line.

Paper Comments

- Send paper comments in triplicate to Elizabeth M. Murphy, Secretary, Securities and Exchange Commission, 100 F Street, NE., Washington, DC 20549–1090.

All submissions should refer to File Number SR–FINRA–2010–025. This file number should be included on the subject line if e-mail is used. To help the Commission process and review your comments more efficiently, please use only one method. The Commission will post all comments on the Commission's Internet Web site (*http://www.sec.gov/rules/sro.shtml*). Copies of the submission, all subsequent amendments, all written statements with respect to the proposed rule change that are filed with the Commission, and all written communications relating to the proposed rule change between the Commission and any person, other than those that may be withheld from the public in accordance with the provisions of 5 U.S.C. 552, will be available for Web site viewing and printing in the Commission's Public Reference Room, 100 F Street, NE., Washington, DC 20549, on official business days between the hours of 10 a.m. and 3 p.m. Copies of such filing also will be available for inspection and copying at the principal office of FINRA. All comments received will be posted without change; the Commission does not edit personal identifying information from submissions. You should submit only information that you wish to make available publicly. All submissions should refer to File Number SR–FINRA–2010–025 and should be submitted on or before June 3, 2010.[7]

For the Commission, by the Division of Trading and Markets, pursuant to delegated authority.[8]

Florence E. Harmon,

Deputy Secretary.

[FR Doc. 2010–12426 Filed 5–21–10; 8:45 am]

BILLING CODE 8010–01–P

[5] 15 U.S.C. 78*o*–3(b)(6).

[6] The Commission notes that the exchange has requested accelerated approval of the filing.

[7] The Commission believes that a 10-day comment period is reasonable, given the urgency of the matter. It will provide adequate time for comment.

[8] 17 CFR 200.30–3(a)(12).

SECURITIES AND EXCHANGE COMMISSION

[Release No. 34–62130; File No. SR–CHX–2010–10]

Self-Regulatory Organizations; Proposed Rule Change by Chicago Stock Exchange, Inc.; Notice of Filing of Proposed Rule Change To Establish a Trading Halt for Individual Stocks Contained in the Standard & Poor's 500 Index

May 19, 2010.

Pursuant to Section 19(b)(1) of the Securities Exchange Act of 1934 ("Act") [1], and Rule 19b–4 [2] thereunder, notice is hereby given that on May 19, 2010, the Chicago Stock Exchange, Inc. ("CHX" or the "Exchange") filed with the Securities and Exchange Commission ("Commission") the proposed rule change as described in Items I, II and III below, which Items have been prepared by the CHX. The Commission is publishing this notice to solicit comments on the proposed rule change from interested persons.

I. Self-Regulatory Organization's Statement of the Terms of Substance of the Proposed Rule Change

CHX proposes to amend Article 20, Rule 2 to amend its rules to create circuit breakers regarding the trading of individual securities. The text of this proposed rule change is available on the Exchange's Web site at (*http://www.chx.com*) and in the Commission's Public Reference Room.

II. Self-Regulatory Organization's Statement of the Purpose of, and Statutory Basis for, the Proposed Rule Change

In its filing with the Commission, the CHX included statements concerning the purpose of and basis for the proposed rule changes and discussed any comments it received regarding the proposal. The text of these statements

[1] 15 U.S.C. 78s(b)(1).

[2] 17 CFR 240.19b–4.

may be examined at the places specified in Item IV below. The CHX has prepared summaries, set forth in sections A, B and C below, of the most significant aspects of such statements.

A. Self-Regulatory Organization's Statement of the Purpose of, and Statutory Basis for, the Proposed Rule Changes

1. Purpose

The CHX is proposing to amend Article 20, Rule 2 to allow the Exchange to pause trading in an individual stock when the primary listing market for such stock issues a trading pause. The primary listing markets for U.S. stocks are in the process of amending their rules so that they may, from time to time, issue a trading pause for an individual security if the price of such security moves 10% or more from a sale in a preceding five-minute period. The Exchange is proposing this rule change in consultation with U.S. listing markets and Commission staff to provide for uniform marketwide trading pause standards for individual securities in the S&P 500® Index that experience rapid price movement for a Pilot Period expiring on December 10, 2010. The Exchange is not currently the primary listing market for any securities to be included in the Pilot, and thus, will not be instituting any trading pauses on its own initiative at this time.[3]

As proposed, the Exchange will pause trading in that stock until trading has resumed on the primary listing market or notice has been received from the primary listing market that trading may resume. If, however, trading has not resumed on the primary listing market and ten minutes have passed since the individual stock trading pause message has been received from the responsible single plan processor, the Exchange may resume trading in such stock.

The Exchange believes that the foregoing proposal is substantially similar to the submissions of other U.S. equities exchanges concerning circuit breaker provisions for individual securities and which are under consideration by the Commission.

2. Statutory Basis

The Exchange believes that the proposed rule change is consistent with Section 6(b) of the Act in general,[4] and furthers the objectives of Section 6(b)(5) in particular,[5] in that it is designed to promote just and equitable principles of trade, to foster cooperation and coordination with persons engaged in facilitating transaction in securities, to remove impediments and perfect the mechanisms of a free and open market, and, in general, to protect investors and the public interest. The proposed rule change is also designed to support the principles of Section 11A(a)(1)[6] of the Act in that it seeks to assure fair competition among brokers and dealers and among exchange markets. The Exchange believes that the proposed rule meets these requirements in that it promotes transparency and uniformity across markets concerning decisions to pause trading in a security when there are significant price movements.

B. Self-Regulatory Organization's Statement of Burden on Competition

The Exchange does not believe that the proposed rule change will impose any burden on competition that is not necessary or appropriate in furtherance of the purposes of the Act.

C. Self-Regulatory Organization's Statement on Comments Regarding the Proposed Rule Changes Received From Members, Participants or Others

No written comments were either solicited or received.

III. Date of Effectiveness of the Proposed Rule Changes and Timing for Commission Action

Within 35 days of the date of publication of this notice in the **Federal Register** or within such longer period (i) as the Commission may designate up to 90 days of such date if it finds such longer period to be appropriate and publishes its reasons for so finding or (ii) as to which the self-regulatory organization consents, the Commission will:

A. By order approve such proposed rule change, or

B. Institute proceedings to determine whether the proposed rule change should be disapproved.[7]

IV. Solicitation of Comments

Interested persons are invited to submit written data, views and arguments concerning the foregoing, including whether the proposal is consistent with the Act. Comments may be submitted by any of the following methods:

Electronic Comments

- Use the Commission's Internet comment form (*http://www.sec.gov/rules/sro.shtml*); or
- Send an e-mail to *rule-comments@sec.gov*. Please include File No. SR–CHX–2010–10 on the subject line.

Paper Comments

- Send paper comments in triplicate to Elizabeth M. Murphy, Secretary, Securities and Exchange Commission, 100 F Street, NE., Washington, DC 20549–1090.

All submissions should refer to File No. SR–CHX–2010–10. This file number should be included on the subject line if e-mail is used. To help the Commission process and review your comments more efficiently, please use only one method. The Commission will post all comments on the Commission's Internet Web site (*http://www.sec.gov/rules/sro.shtml*). Copies of the submission, all subsequent amendments, all written statements with respect to the proposed rule change that are filed with the Commission, and all written communications relating to the proposed rule change between the Commission and any person, other than those that may be withheld from the public in accordance with the provisions of 5 U.S.C. 552, will be available for Web site viewing and printing in the Commission's Public Reference Room on official business days between the hours of 10 a.m. and 3 p.m. Copies of such filing will also be available for inspection and copying at the principal office of the CHX. All comments received will be posted without change; the Commission does not edit personal identifying information from submissions. You should submit only information that you wish to make available publicly. All submissions should refer to File No. SR–CHX–2010–10 and should be submitted on or before June 3, 2010.[8]

For the Commission, by the Division of Trading and Markets, pursuant to delegated authority.[9]

Florence E. Harmon,

Deputy Secretary.

[FR Doc. 2010–12423 Filed 5–21–10; 8:45 am]

BILLING CODE 8010–01–P

[3] The Exchange anticipates discussion during the Pilot period about the potential expansion of individual stock circuit breakers to a broader group of securities. To the extent that it appears that the Exchange may become the primary listing exchange for any securities affected by an individual circuit breaker, it will adopt the necessary rules to support that framework. See, e.g., proposed NYSE Rule 80C.

[4] 15 U.S.C. 78f(b).

[5] 15 U.S.C. 78f(b)(5).

[6] 15 U.S.C. 78k–1(a)(1).

[7] The Commission notes that the exchange has requested accelerated approval of the filing.

[8] The Commission believes that a 10-day comment period is reasonable, given the urgency of the matter. It will provide adequate time for comment.

[9] 17 CFR 200.30–3(a)(12).

SECURITIES AND EXCHANGE COMMISSION

[Release No. 34–62123; File No. SR–EDGX–2010–01]

Self-Regulatory Organizations; EDGX Exchange, Inc.; Notice of Filing of Proposed Rule Change To Amend EDGX Rule 11.14, Entitled "Trading Halts Due to Extraordinary Market Volatility"

May 19, 2010.

Pursuant to Section 19(b)(1) of the Securities Exchange Act of 1934 (the "Act"),[1] and Rule 19b–4 thereunder,[2] notice is hereby given that on May 18, 2010, EDGX Exchange, Inc. (the "Exchange" or "EDGX") filed with the Securities and Exchange Commission ("Commission") the proposed rule change as described in Items I and II below, which Items have been prepared by the Exchange. The Commission is publishing this notice to solicit comments on the proposed rule change from interested persons.

I. Self-Regulatory Organization's Statement of the Terms of Substance of the Proposed Rule Change

The Exchange is proposing to amend EDGX Rule 11.14, entitled "Trading Halts Due to Extraordinary Market Volatility."

The text of the proposed rule change is available at the Exchange's Web site at *http://www.directedge.com,* at the principal office of the Exchange, and at the Commission's Public Reference Room.

II. Self-Regulatory Organization's Statement of the Purpose of, and Statutory Basis for, the Proposed Rule Change

In its filing with the Commission, the Exchange included statements concerning the purpose of and basis for the proposed rule change and discussed any comments it received on the proposed rule change. The text of these statements may be examined at the places specified in Item IV below. The Exchange has prepared summaries, set forth in Sections A, B, and C below, of the most significant parts of such statements.

A. Self-Regulatory Organization's Statement of the Purpose of, and Statutory Basis for, the Proposed Rule Change

1. Purpose

The primary listing markets for U.S. stocks are in the process of amending their rules so that they may, from time to time, issue a trading pause for an individual security if the price of such security moves 10% or more from a sale in a preceding five-minute period. The Exchange is proposing the rule change described below in consultation with other markets and Commission staff to provide for uniform market-wide trading pause standards for individual securities in the S&P 500® Index that experience rapid price movement, as set forth below. The Exchange is not currently the primary listing market for any securities, and thus, will not be issuing any trading pauses pursuant to its rules.

The Exchange proposes to add a new paragraph to EDGX Rule 11.14 to allow the Exchange to pause trading in an individual stock when the primary listing market for such stock issues a trading pause in any Circuit Breaker Securities, as defined below and in proposed Interpretation and Policy .05 of Rule 11.14. If, however, trading has not resumed on the primary listing market and ten minutes have passed since the individual stock trading pause message has been received from the responsible single plan processor, the Exchange may resume trading in such stock.

The proposed rule would apply to trading pauses issued by primary listing markets in "Circuit Breaker Securities," as defined in proposed Interpretation and Policy .05. Specifically, on a pilot basis, set to end on December 10, 2010, Circuit Breaker Securities would mean the securities included in the S&P 500® Index.

In addition to adding a new paragraph to Rule 11.14 as paragraph (d), and renaming existing paragraph (d) as paragraph (e), the Exchange has also proposed minor changes to Rule 11.14. To make clear that the existing trading halt described in Rule 11.14 applies to all stocks traded on the Exchange, the Exchange has added the word "all" to the text of paragraphs (a) and (b) of Rule 11.14. Finally, the Exchange has proposed certain minor changes to the references in its rules, specifically: (1) Deleting references to the number of the Rule to avoid inaccurate cross-references in the event there are other changes to the Exchange's Rules; and (2) renaming sections .01 to .04 and proposed section .05 of the Rule as "Interpretations and Policies" rather than "Commentary" to be consistent with the rest of the Exchange's rules.

2. Statutory Basis

Approval of the rule change proposed in this submission is consistent with the requirements of the Act and the rules and regulations thereunder that are applicable to a national securities exchange, and, in particular, with the requirements of Section 6(b) of the Act.[3] In particular, the proposed change is consistent with Section 6(b)(5) of the Act,[4] because it would promote just and equitable principles of trade, remove impediments to, and perfect the mechanism of, a free and open market and a national market system, and, in general, protect investors and the public interest. The proposed rule change is also designed to support the principles of Section 11A(a)(1)[5] of the Act in that it seeks to assure fair competition among brokers and dealers and among exchange markets. The Exchange believes that the proposed rule meets these requirements in that it promotes transparency and uniformity across markets concerning decisions to pause trading in a security when there are significant price movements.

B. Self-Regulatory Organization's Statement on Burden on Competition

The Exchange does not believe that the proposed rule change imposes any burden on competition.

C. Self-Regulatory Organization's Statement on Comments on the Proposed Rule Change Received From Members, Participants or Others

The Exchange has neither solicited nor received written comments on the proposed rule change.

III. Date of Effectiveness of the Proposed Rule Change and Timing for Commission Action

Within 35 days of the date of publication of this notice in the **Federal Register** or within such longer period (i) as the Commission may designate up to 90 days of such date if it finds such longer period to be appropriate and publishes its reasons for so finding or (ii) as to which the self-regulatory organization consents, the Commission will:

(A) By order approve the proposed rule change, or

(B) Institute proceedings to determine whether the proposed rule change should be disapproved.[6]

IV. Solicitation of Comments

Interested persons are invited to submit written data, views, and arguments concerning the foregoing, including whether the proposed rule change is consistent with the Exchange

[1] 15 U.S.C. 78s(b)(1).

[2] 17 CFR 240.19b–4.

[3] 15 U.S.C. 78f(b).

[4] 15 U.S.C. 78f(b)(5).

[5] 15 U.S.C. 78k–1(a)(1).

[6] The Commission notes that the Exchange has requested accelerated approval of the filing.

Act. Comments may be submitted by any of the following methods:

Electronic Comments

- Use the Commission's Internet comment form (*http://www.sec.gov/rules/sro.shtml*); or
- Send an e-mail to *rule-comments@sec.gov.* Please include File Number SR–EDGX–2010–01 on the subject line.

Paper Comments

- Send paper comments in triplicate to Elizabeth M. Murphy, Secretary, Securities and Exchange Commission, 100 F Street, NE., Washington, DC 20549–1090.

All submissions should refer to File Number SR–EDGX–2010–01. This file number should be included on the subject line if e-mail is used. To help the Commission process and review your comments more efficiently, please use only one method. The Commission will post all comments on the Commission's Internet Web site (*http://www.sec.gov/rules/sro.shtml*). Copies of the submission, all subsequent amendments, all written statements with respect to the proposed rule change that are filed with the Commission, and all written communications relating to the proposed rule change between the Commission and any person, other than those that may be withheld from the public in accordance with the provisions of 5 U.S.C. 552, will be available for Web site viewing and printing in the Commission's Public Reference Room, 100 F Street, NE., Washington, DC 20549, on official business days between the hours of 10 a.m. and 3 p.m. Copies of the filing also will be available for inspection and copying at the principal office of the Exchange. All comments received will be posted without change; the Commission does not edit personal identifying information from submissions. You should submit only information that you wish to make available publicly. All submissions should refer to File Number SR–EDGX–2010–01 and should be submitted on or before June 3, 2010.[7]

For the Commission, by the Division of Trading and Markets, pursuant to delegated authority.[8]

Florence E. Harmon,

Deputy Secretary.

[FR Doc. 2010–12414 Filed 5–21–10; 8:45 am]

BILLING CODE 8010–01–P

[7] The Commission believes that a 10-day comment period is reasonable, given the urgency of the matter. It will provide adequate time for comment.

[8] 17 CFR 200.30–3(a)(12).

SECURITIES AND EXCHANGE COMMISSION

[Release No. 34–62131; File No. SR–NSX–2010–05]

Self-Regulatory Organizations; National Stock Exchange, Inc.; Notice of Filing of a Proposed Rule Change To Establish a Trading Halt for Individual Stocks Contained in the Standard & Poor's 500 Index That Experience a 10 Percent Price Change of 10% or More During a Five-Minute Period Pursuant to Exchange Rule 11.20

May 19, 2010.

Pursuant to Section 19(b)(1) of the Securities Exchange Act of 1934 (the "Act") [1] and Rule 19b–4 thereunder,[2] notice is hereby given that on May 18, 2010, National Stock Exchange, Inc. filed with the Securities and Exchange Commission ("Commission") the proposed rule change, as described in Items I, II, and III below, which Items have been prepared by the Exchange. The Commission is publishing this notice to solicit comment on the proposed rule change from interested persons.

I. Self-Regulatory Organization's Statement of the Terms of Substance of the Proposed Rule Change

National Stock Exchange, Inc. ("NSX®" or the "Exchange") is proposing to establish a trading halt for individual stocks contained in the Standard & Poor's 500 Index ("S&P 500") that experience a price change of 10% or more during a five-minute period.

The text of the proposed rule change is available on the Exchange's Web site at *http://www.nsx.com,* at the principal office of the Exchange, and at the Commission's Public Reference Room.

II. Self-Regulatory Organization's Statement of the Purpose of, and Statutory Basis for, the Proposed Rule Change

In its filing with the Commission, the Exchange included statements concerning the purpose of and basis for the proposed rule change and discussed any comments it received on the proposed rule change. The text of these statements may be examined at the places specified in Item IV below. The Exchange has prepared summaries, set forth in sections A, B, and C below, of the most significant parts of such statements.

A. Self-Regulatory Organization's Statement of the Purpose of, and Statutory Basis for, the Proposed Rule Change

Purpose

The Exchange proposes to add NSX Rule 11.20B to provide for a trading pause for individual securities for which the Exchange is the primary listing market if the price of such security moves 10% or more from a sale in a preceding five-minute period. The Exchange is proposing this rule addition in consultation with other listing markets and staff of the Securities and Exchange Commission to provide for uniform market-wide trading pause standards for individual securities in the S&P 500® Index (for which the Exchange is the primary listing market) that experience rapid price movement, as set forth below ("Circuit Breaker Securities"). Consistent with the other markets, the Exchange is proposing that this rule be implemented as a six-month pilot so that all of the markets may assess the effect of this rule proposal on the national market system.

As proposed, Rule 11.20B would enable the Exchange to pause trading in an individual security that is primary listed [sic] on the Exchange (a "Listed Circuit Breaker Security") if the price moves by 10% as compared to prices of that security in the preceding five-minute period during a trading day, which period is defined as a "Trading Pause." To enable the market to absorb the opening price of a security and to participate in the close, as proposed, the proposed rule would be in effect from 9:45 a.m. to 3:35 p.m., Eastern time (all times referenced in the Rule have now been converted to reflect Eastern time).

Proposed Rule 11.20B(b) sets forth the re-opening procedures of a Listed Circuit Breaker Security following a Trading Pause. As proposed, the Exchange will re-open trading in the Listed Circuit Breaker Security at the end of the Trading Pause subject to Exchange procedures. As proposed, in the event of a significant imbalance, the Exchange may delay the re-opening of the security past the five-minute Trading Pause period. The Exchange will notify other markets if it cannot reopen because of system changes, thereby enabling other market to resume

[1] 15 U.S.C. 78s(b)(1).

[2] 17 CFR 240.19b–4.

trading even if the primary listing market has not re-opened.

The 10% or more move in price will be calculated by comparing the last consolidated sale price of a Listed Circuit Breaker Security ("Trigger Trade") to a reference price every second. For purposes of this calculation, the reference price shall be any transaction in that security printed to the Consolidated Tape during a five-minute period before the Trigger Trade. Because the calculation period begins at 9:45 a.m., trades occurring after 9:45 a.m. may be a Trigger Trade; however, the reference price(s) for such Trigger Trades will begin at 9:45 a.m. In such case, in the first five minutes of the calculation period, the reference prices for a Trigger Trade will not be based on five minutes of trading in that security. For example, a trade at 9:45:05 will be compared only to trades between 9:45:00 and 9:45:05. The last potential Trigger Trade will be at 3:35 p.m., so that such Trading Pause will end at 3:40 p.m.

As proposed, only regular way, in-sequence transactions qualify as either a Trigger Trade or a reference price. To ensure that erroneous executions do not trigger a Trading Pause, the Exchange also proposes that it can exclude a transaction price from use as a reference price or Trigger Trade if it concludes that the transaction price resulted from an erroneous trade.

The proposed rule further provides that if a Trading Pause is triggered for a Listed Circuit Breaker Security, the Exchange will immediately notify the single plan processor responsible for consolidation of information for the security.

In addition, proposed Rule 11.20B(f) would allow the Exchange to pause trading in an individual security when the primary listing market for such security issues a trading pause in any Circuit Breaker Security. If, however, trading has not resumed on the primary listing market and ten minutes have passed since the individual security trading pause message has been received from the responsible single plan processor, the Exchange may resume trading in such security.

The proposed rule would apply to trading pauses issued by primary listing markets in "Circuit Breaker Securities," as defined in proposed Commentary .05. Specifically, on a pilot basis, set to end on December 10, 2010, Circuit Breaker Securities would mean the securities included in the S&P 500® Index. Thus, proposed Rule 11.20B would be in effect only with respect to securities in the S&P 500® Index.

In addition to proposing the addition of new Rule 11.20B, the text of the prior Rule 11.20 would be reformatted to make clear that newly formatted Rule 11.20A applies to market-wide halts whereas proposed new Rule 11.20B applies to individual security pauses. The time periods specified in Rule 11.20A are also revised to make Eastern time the uniform time zone referenced in the rule. Further, the text of Rule 11.20A(d) is proposed to be moved to a new Rule 11.20C to make clear that the NSX book is cleared of all outstanding orders in the context of both individual security pauses and market-wide halts. Similarly, the commentary to Rule 11.20 is proposed to be edited in conformity with the edits proposed elsewhere in the rule. As proposed, nothing in the rule would be construed to affect or limit in any way the ability of the Exchange to halt or suspend trading n [sic] one or more securities pursuant to any other Exchange rule or policy.

Statutory Basis

The statutory basis for the proposed rule change is Section 6(b)(5) of the Act,[3] which requires the rules of an exchange to promote just and equitable principles of trade, to remove impediments to and perfect the mechanism of a free and open market and a national market system and, in general, to protect investors and the public interest. The proposed rule change also is designed to support the principles of Section 11A(a)(1)[4] of the Act in that it seeks to assure fair competition among brokers and dealers and among exchange markets. The Exchange believes that the proposed rule meets these requirements in that it promotes transparency and uniformity across markets concerning decisions to pause trading in a security when there are significant price movements.

B. Self-Regulatory Organization's Statement on Burden on Competition

The Exchange does not believe that the proposed rule change will impose any burden on competition that is not necessary or appropriate in furtherance of the purposes of the Exchange Act.

C. Self-Regulatory Organization's Statement on Comments on the Proposed Rule Change Received From Members, Participants or Others

The Exchange has neither solicited nor received written comments on the proposed rule change.

[3] 15 U.S.C. 78f(b)(5).

[4] 15 U.S.C. 78k–1(a)(1).

III. Date of Effectiveness of the Proposed Rule Change and Timing for Commission Action

Within 35 days of the date of publication of this notice in the **Federal Register** or within such longer period (i) as the Commission may designate up to 90 days of such date if it finds such longer period to be appropriate and publishes its reasons for so finding or (ii) as to which the self-regulatory organization consents, the Commission will:

A. By order approve such proposed rule change, or

B. Institute proceedings to determine whether the proposed rule change should be disapproved.[5]

IV. Solicitation of Comments

Interested persons are invited to submit written data, views, and arguments concerning the foregoing, including whether the proposed rule change is consistent with the Act. Comments may be submitted by any of the following methods:

Electronic Comments

- Use the Commission's Internet comment form (*http://www.sec.gov/rules/sro.shtml*); or
- Send an e-mail to *rule-comments@sec.gov.* Please include File Number SR–NSX–2010–05 on the subject line.

Paper Comments

- Send paper comments in triplicate to Elizabeth M. Murphy, Secretary, Securities and Exchange Commission, 100 F Street, NE., Washington, DC 20549–9303.

All submissions should refer to File No. SR–NSX–2010–05. This file number should be included in the subject line if e-mail is used. To help the Commission process and review comments more efficiently, please use only one method. The Commission will post all comments on the Commission's Internet Web site (*http://www.sec.gov/rules/sro.shtml*). Copies of the submission, all subsequent amendments, all written statements with respect to the proposed rule change that are filed with the Commission, and all written communications relating to the proposed rule change between the Commission and any person, other than those that may be withheld from the public in accordance with the provisions of 5 U.S.C. 552, will be available for Web site viewing and printing in the Commission's Public

[5] The Commission notes that the exchange has requested accelerated approval of the filing.

Reference Section, 100 F Street, NE., Washington, DC 20549. Copies of such filings will also be available for inspection and copying at the principal office of the Exchange. All comments received will be posted without change; the Commission does not edit personal identifying information from submissions. You should submit only information that you wish to make available publicly. All submissions should refer to file number SR–NSX–2010–05 and should be submitted on or before June 3, 2010.

For the Commission by the Division of Trading and Markets, pursuant to the delegated authority.[6]

Florence E. Harmon,

Deputy Secretary.

[FR Doc. 2010–12424 Filed 5–21–10; 8:45 am]

BILLING CODE 8010–01–P

SECURITIES AND EXCHANGE COMMISSION

[Release No. 34–62132; File No. SR–CBOE–2010–047]

Self-Regulatory Organizations; Chicago Board Options Exchange, Incorporated; Notice of Filing of a Proposed Rule Change Related to Individual Stock Trading Pauses Due to Extraordinary Market Volatility

May 19, 2010.

Pursuant to Section 19(b)(1) of the Securities Exchange Act of 1934 (the "Act"),[1] and Rule 19b–4 thereunder,[2] notice is hereby given that on May 18, 2010, the Chicago Board Options Exchange, Incorporated (the "Exchange" or "CBOE") filed with the Securities and Exchange Commission (the "Commission") the proposed rule change as described in Items I, II, and III below, which Items have been prepared by the Exchange. The Commission is publishing this notice to solicit comments on the proposed rule change from interested persons.

I. Self-Regulatory Organization's Statement of the Terms of Substance of the Proposed Rule Change

The Exchange is proposing to amend trading procedures on a pilot basis for certain stocks traded on the CBOE Stock Exchange ("CBSX"), the CBOE's stock trading facility. The text of the proposed rule change is available on the Exchange's Web site (*http://www.cboe.org/Legal*), at the Office of the Secretary, CBOE and at the Commission.

II. Self-Regulatory Organization's Statement of the Purpose of, and Statutory Basis for, the Proposed Rule Change

In its filing with the Commission, the self-regulatory organization included statements concerning the purpose of and basis for the proposed rule change and discussed any comments it received on the proposed rule change. The text of those statements may be examined at the places specified in Item IV below. The Exchange has prepared summaries, set forth in sections A, B, and C below, of the most significant parts of such statements.

A. Self-Regulatory Organization's Statement of the Purpose of, and the Statutory Basis for, the Proposed Rule Change

1. Purpose

The primary listing markets for U.S. stocks are in the process of amending their rules so that they may, from time to time, issue a trading pause for an individual stock if the price of such stock moves 10% or more from a sale in a preceding five-minute period. The Exchange is proposing the rule change described below in consultation with U.S. listing markets and Commission staff to provide for uniform market-wide trading pause standards for individual stocks in the S&P 500 Index that experience rapid price movement, as set forth below. The Exchange is not currently the primary listing market for any stocks, and thus, will not be issuing any trading pauses pursuant to its rules.

The Exchange proposes to add a new Rule 6.3C to allow CBSX to halt trading in an individual stock when the primary listing market for such stock issues a trading pause in any Circuit Breaker Stocks, as defined below and in proposed Rule 6.3C.03. CBSX will resume trading once trading has resumed on the primary listing market. If, however, trading has not resumed on the primary listing market after ten minutes have passed since the individual stock trading pause message has been received from the responsible single plan processor, CBSX may resume trading in such stock.

The proposed rule would apply to trading pauses issued by primary listing markets in "Circuit Breaker Stocks," as defined in proposed Rule 6.3C.03. Specifically, on a pilot basis, set to end on December 10, 2010, Circuit Breaker Stocks would mean the stocks included in the S&P 500 Index. Thus, proposed Rule 6.3C would be in effect only with respect to stocks in the S&P 500 Index.

Upon reopening, a rotation shall be held in the individual stock on CBSX unless the Exchange concludes that a different method of reopening is appropriate under the circumstances, including but not limited to, no rotation, an abbreviated rotation or any other variation in the manner of the rotation. Lastly, nothing in the proposed Rule shall be construed to limit the ability of the Exchange to halt or suspend trading in any security or securities traded on the Exchange pursuant to any other Exchange rule or policy.

In addition to adding a new Rule 6.3C, the Exchange has also proposed minor changes to Rules 6.2B and 52.3. To make clear that the existing trading halt described in Rule 6.2B applies to all stocks traded on the Exchange, the Exchange has added the word "marketwide" to the title of Rule 6.2B. Finally, the Exchange has proposed to include a cross-reference to proposed Rule 6.2C in Rule 52.3.

2. Statutory Basis

Approval of the rule change proposed in this submission is consistent with the requirements of the Act and the rules and regulations thereunder that are applicable to a national securities exchange, and, in particular, with the requirements of Section 6(b) of the Act.[3] In particular, the proposed change is consistent with Section 6(b)(5) of the Act,[4] because it would promote just and equitable principles of trade, remove impediments to, and perfect the mechanism of, a free and open market and a national market system, and, in general, protect investors and the public interest. The proposed rule change is also designed to support the principles of Section 11A(a)(1)[5] of the Act in that it seeks to assure fair competition among brokers and dealers and among exchange markets. The Exchange believes that the proposed rule meets these requirements in that it promotes transparency and uniformity across markets concerning decisions to pause trading in a stock when there are significant price movements.

B. Self-Regulatory Organization's Statement on Burden on Competition

CBOE does not believe that the proposed rule change will impose any burden on competition not necessary or appropriate in furtherance of the purposes of the Act.

[6] 17 CFR 200.30–3(a)(12).

[1] 15 U.S.C. 78s(b)(1).

[2] 17 CFR 240.19b–4.

[3] 15 U.S.C. 78f(b).

[4] 15 U.S.C. 78f(b)(5).

[5] 15 U.S.C. 78k–1(a)(1).

C. Self-Regulatory Organization's Statement on Comments on the Proposed Rule Change Received from Members, Participants, or Others

No written comments were solicited or received with respect to the proposed rule change.

III. Date of Effectiveness of the Proposed Rule Change and Timing for Commission Action

Within 35 days of the date of publication of this notice in the **Federal Register** or within such longer period (i) as the Commission may designate up to 90 days of such date if it finds such longer period to be appropriate and publishes its reasons for so finding or (ii) as to which the self-regulatory organization consents, the Commission will:

(A) By order approve such proposed rule change, or

(B) Institute proceedings to determine whether the proposed rule change should be disapproved.[6]

IV. Solicitation of Comments

Interested persons are invited to submit written data, views, and arguments concerning the foregoing, including whether the proposed rule change is consistent with the Act. Comments may be submitted by any of the following methods:

Electronic Comments

Use the Commission's Internet comment form (*http://www.sec.gov/rules/sro.shtml*); or

- Send an e-mail to *rule-comments@sec.gov.* Please include File Number SR–CBOE–2010–047 on the subject line.

Paper Comments

- Send paper comments in triplicate to Elizabeth M. Murphy, Secretary, Securities and Exchange Commission, 100 F Street, NE., Washington, DC 20549–1090.

All submissions should refer to File Number SR–CBOE–2010–047. This file number should be included on the subject line if e-mail is used. To help the Commission process and review your comments more efficiently, please use only one method. The Commission will post all comments on the Commission's Internet Web site (*http://www.sec.gov/rules/sro.shtml*). Copies of the submission, all subsequent amendments, all written statements with respect to the proposed rule change that are filed with the Commission, and all written communications relating to the proposed rule change between the Commission and any person, other than those that may be withheld from the public in accordance with the provisions of 5 U.S.C. 552, will be available for Web site viewing and printing in the Commission's Public Reference Room, 100 F Street, NE., Washington, DC 20549, on official business days between the hours of 10 a.m. and 3 p.m. Copies of such filing also will be available for inspection and copying at the principal office of the CBOE.

All comments received will be posted without change; the Commission does not edit personal identifying information from submissions. You should submit only information that you wish to make available publicly. All submissions should refer to File Number SR–CBOE–2010–047 and should be submitted on or before June 3, 2010.[7]

For the Commission, by the Division of Trading and Markets, pursuant to delegated authority.[8]

Florence E. Harmon,

Deputy Secretary.

[FR Doc. 2010–12425 Filed 5–21–10; 8:45 am]

BILLING CODE 8010–01–P

[6] The Commission notes that the exchange has requested accelerated approval of the filing.

[7] The Commission believes that a 10-day comment period is reasonable, given the urgency of the matter. It will provide adequate time for comment.

[8] 17 CFR 200.30–3(a)(12).

DEPARTMENT OF STATE

[Public Notice 7027]

Culturally Significant Objects Imported for Exhibition Determinations: "The Original Copy: Photography of Sculpture, 1839 to Today"

SUMMARY: Notice is hereby given of the following determinations: Pursuant to the authority vested in me by the Act of October 19, 1965 (79 Stat. 985; 22 U.S.C. 2459), Executive Order 12047 of March 27, 1978, the Foreign Affairs Reform and Restructuring Act of 1998 (112 Stat. 2681, *et seq.;* 22 U.S.C. 6501 note, *et seq.*), Delegation of Authority No. 234 of October 1, 1999, Delegation of Authority No. 236 of October 19, 1999, as amended, and Delegation of Authority No. 257 of April 15, 2003 [68 FR 19875], I hereby determine that the objects to be included in the exhibition "The Original Copy: Photography of Sculpture, 1839 to Today," imported from abroad for temporary exhibition within the United States, are of cultural significance. The objects are imported pursuant to loan agreements with the foreign owners or custodians. I also determine that the exhibition or display of the exhibit objects at The Museum of Modern Art, New York, NY, from on or about August 1, 2010, until on or about November 1, 2010, and at possible additional exhibitions or venues yet to be determined, is in the national interest. I have ordered that Public Notice of these Determinations be published in the **Federal Register**.

FOR FURTHER INFORMATION CONTACT: For further information, including a list of the exhibit objects, contact Julie Simpson, Attorney-Adviser, Office of the Legal Adviser, U.S. Department of State (telephone: 202–632–6467). The mailing address is U.S. Department of State, SA–5, L/PD, Fifth Floor (Suite 5H03), Washington, DC 20522–0505.

Dated: May 17, 2010.

Maura M. Pally,

Deputy Assistant Secretary for Professional and Cultural Exchanges, Bureau of Educational and Cultural Affairs, Department of State.

[FR Doc. 2010–12445 Filed 5–21–10; 8:45 am]

BILLING CODE 4710–05–P

DEPARTMENT OF STATE

[Public Notice 7025]

Determination and Certification Under Section 40a of the Arms Export Control Act

Pursuant to section 40A of the Arms Export Control Act (22 U.S.C. 2781), and Executive Order 11958, as amended, I hereby determine and certify to the Congress that the following countries are not cooperating fully with United States antiterrorism efforts: Cuba; Eritrea; Iran; Democratic People's Republic of Korea (DPRK, or North Korea); Syria; Venezuela.

This determination and certification shall be transmitted to the Congress and published in the **Federal Register**.

Dated: May 5, 2010.

James B. Steinberg,

Deputy Secretary of State.

[FR Doc. 2010–12437 Filed 5–21–10; 8:45 am]

BILLING CODE 4710–10–P

DEPARTMENT OF STATE

[Public Notice: 7024]

Lifting of Policy of Denial of Munitions Export Licenses and Other Approvals Destined for Tula Instrument Design Bureau

SUMMARY: The Department of State is lifting the policy of denial for Tula Instrument Design Bureau pursuant to

section 38 of the Arms Export Control Act (AECA) and section 126.7 of the International Traffic in Arms Regulations (ITAR).

DATES: *Effective Date:* May 24, 2010.

FOR FURTHER INFORMATION CONTACT: Lisa V. Studtmann, Director, Office of Defense Trade Controls Compliance, Bureau of Political-Military Affairs, Department of State (202) 663–2477.

SUPPLEMENTARY INFORMATION: Section 126.7 of the ITAR provides that any application for an export license or other approval under the ITAR may be disapproved and any license or other approval or exemption granted may be revoked, suspended, or amended without prior notice whenever, among other things, the Department of State believes that section 38 of the AECA (22 U.S.C. 2778), any regulation contained in the ITAR, or the terms of any U.S. Government export authorization (including terms of a manufacturing license or technical assistance agreement, or export authorization granted pursuant to the Export Administration Act, as amended) has been violated by any party to the export or other person having a significant interest in the transaction; or whenever the Department of State deems such action to be in furtherance of world peace, the national security or the foreign policy of the United States, or is otherwise advisable. A determination was made on May 12, 2010, that it is in the foreign policy or national security interests of the United States to remove the restrictions imposed on Tula Instrument Design Bureau pursuant to Section 126.7 of the ITAR.

Dated: May 17, 2010.

Andrew J. Shapiro,

Assistant Secretary, Department of State.

[FR Doc. 2010–12448 Filed 5–21–10; 8:45 am]

BILLING CODE 4710–25–P

DEPARTMENT OF STATE

[Public Notice 7023]

Renewal of Cultural Property Advisory Committee Charter

SUMMARY: The Charter of the Department of State's Cultural Property Advisory Committee (CPAC) has been renewed for an additional two years.

The Charter of the Cultural Property Advisory Committee is being renewed for a two-year period. The Committee was established by the Convention on Cultural Property Implementation Act of 1983, 19 U.S.C. 2601 *et seq.* It reviews requests from other countries seeking U.S. import restrictions on archaeological or ethnological material the pillage of which places a country's cultural heritage in jeopardy. The Committee makes findings and recommendations to the Secretary of State, who, on behalf of the President, determines whether to impose the import restrictions. The membership of the Committee consists of private sector experts in archaeology, anthropology, or ethnology; experts in the international sale of cultural property; and representatives of museums and of the general public.

FOR FURTHER INFORMATION CONTACT: Cultural Heritage Center, U.S. Department of State, Bureau of Educational and Cultural Affairs, State Annex 5, 2200 C Street, NW., Washington, DC 20522. Telephone: (202) 632–6301; Fax: (202) 632–6300.

Dated: May 10, 2010.

Maria P. Kouroupas,

Executive Director, Cultural Property Advisory Committee, Department of State.

[FR Doc. 2010–12406 Filed 5–21–10; 8:45 am]

BILLING CODE 4710–05–P

DEPARTMENT OF STATE

[Public Notice 7026]

Review of the Designation of Ansar al-Islam (aka Ansar Al-Sunnah and Other Aliases) as a Foreign Terrorist Organization Pursuant to Section 219 of the Immigration and Nationality Act, as Amended

Based upon a review of the Administrative Records assembled in these matters pursuant to Section 219(a)(4)(C) of the Immigration and Nationality Act, as amended (8 U.S.C. 1189(a)(4)(C)) ("INA"), and in consultation with the Attorney General and the Secretary of the Treasury, I conclude that the circumstances that were the basis for the 2004 re-designation of the aforementioned organization as a foreign terrorist organization have not changed in such a manner as to warrant revocation of the designation and that the national security of the United States does not warrant a revocation of the designation.

Therefore, I hereby determine that the designation of the aforementioned organization as a foreign terrorist organization, pursuant to section 219 of the INA (8 U.S.C. 1189), shall be maintained.

This determination shall be published in the **Federal Register**.

Dated: May 6, 2010.

James B. Steinberg,

Deputy Secretary of State.

[FR Doc. 2010–12440 Filed 5–21–10; 8:45 am]

BILLING CODE 4710–10–P

SUSQUEHANNA RIVER BASIN COMMISSION

Notice of Public Hearing and Commission Meeting

AGENCY: Susquehanna River Basin Commission.

ACTION: Notice of public hearing and commission meeting.

SUMMARY: The Susquehanna River Basin Commission will hold a public hearing as part of its regular business meeting on June 11, 2010, in Harrisburg, Pa. At the public hearing, the Commission will consider: (1) Action on certain water resources projects; (2) action on two projects involving a diversion; and (3) amendments to the current Regulatory Program Fee Schedule. Details concerning the matters to be addressed at the public hearing and business meeting are contained in the **SUPPLEMENTARY INFORMATION** section of this notice.

DATES: June 11, 2010, at 8:30 a.m.

ADDRESSES: Hilton Harrisburg, One North Second Street, Harrisburg, Pa. 17101.

FOR FURTHER INFORMATION CONTACT: Richard A. Cairo, General Counsel, telephone: (717) 238–0423, ext. 306; fax: (717) 238–2436; e-mail: *rcairo@srbc.net* or Stephanie L. Richardson, Secretary to the Commission, telephone: (717) 238–0423, ext. 304; fax: (717) 238–2436; e-mail: *srichardson@srbc.net.*

SUPPLEMENTARY INFORMATION: In addition to the public hearing and its related action items identified below, the business meeting also includes actions or presentations on the following items: (1) Presentation by the IMAX production staff at the Harrisburg Whitaker Center for Science and the Arts on development of an educational production on the future of Chesapeake Bay; (2) concluding report on the Paxton Creek Stormwater Management Project; (3) hydrologic conditions in the basin; (4) proposed rulemaking covering 18 CFR parts 806 and 808; (5) ratification/approval of grants/contracts; (6) consideration of a FY–2012 budget and related matters; and (7) election of a new Chairman and Vice Chairman to serve in the next fiscal year. The Commission will also hear a Legal Counsel's report.

Public Hearing—Projects Scheduled for Action:

1. *Project Sponsor and Facility:* Carrizo Oil & Gas, Inc. (East Branch Wyalusing Creek—Bonnice), Jessup Township, Susquehanna County, Pa. Application for surface water withdrawal of up to 0.720 mgd.

2. *Project Sponsor:* Chester County Solid Waste Authority. Project Facility: Lanchester Landfill, Salisbury and Caernarvon Townships, Lancaster County, Pa. Application for groundwater withdrawal of 0.190 mgd (30-day average) from two wells and three collection sumps.

3. *Project Sponsor:* Chester County Solid Waste Authority. Project Facility: Lanchester Landfill, Salisbury and Caernarvon Townships, Lancaster County, Pa. Application for consumptive water use of up to 0.075 mgd.

4. *Project Sponsor and Facility:* Chief Oil & Gas LLC (Chest Creek—Kitchen), Chest Township, Clearfield County, Pa. Application for surface water withdrawal of up to 0.216 mgd.

5. *Project Sponsor and Facility:* East Resources, Inc. (Cowanesque River—Egleston), Nelson Township, Tioga County, Pa. Application for surface water withdrawal of up to 0.267 mgd.

6. *Project Sponsor and Facility:* KMI, LLC (West Branch Susquehanna River—Owner), Mahaffey Borough, Clearfield County, Pa. Application for surface water withdrawal of up to 5.000 mgd.

7. *Project Sponsor and Facility:* Linde Corporation (Lackawanna River—Carbondale Industrial Development Authority), Fell Township, Lackawanna County, Pa. Application for surface water withdrawal of up to 0.905 mgd.

8. *Project Sponsor:* New Morgan Landfill Company, Inc. Project Facility: Conestoga Landfill, Bethel Township, Berks County, Pa. Modification to increase consumptive water use approval (Docket No. 20061206).

9. *Project Sponsor and Facility:* Novus Operating, LLC (Tioga River—Mitchell), Covington Township, Tioga County, Pa. Application for surface water withdrawal of up to 1.750 mgd.

10. *Project Sponsor and Facility:* P.H. Glatfelter Company, Spring Grove Borough, York County, Pa. Application for consumptive water use of up to 0.460 mgd.

11. *Project Sponsor and Facility:* Pennsylvania General Energy Company, L.L.C. (Loyalsock Creek—Hershberger), Gamble Township, Lycoming County, Pa. Application for surface water withdrawal of up to 0.918 mgd.

12. *Project Sponsor and Facility:* Pennsylvania General Energy Company, L.L.C. (Pine Creek—Poust), Watson Township, Lycoming County, Pa. Application for surface water withdrawal of up to 0.918 mgd.

13. *Project Sponsor and Facility:* Stone Energy Corporation (Wyalusing Creek—Stang), Rush Township, Susquehanna County, Pa. Application for surface water withdrawal of up to 0.750 mgd.

14. *Project Sponsor and Facility:* Susquehanna Gas Field Services, L.L.C., Meshoppen Borough, Wyoming County, Pa. Application for groundwater withdrawal of up to 0.216 mgd from the Meshoppen Pizza Well.

15. *Project Sponsor and Facility:* Talisman Energy USA Inc. (Susquehanna River—Welles), Terry Township, Bradford County, Pa. Application for surface water withdrawal of up to 2.000 mgd.

16. *Project Sponsor:* United Water PA. Project Facility: Newberry System, Newberry Township, York County, Pa. Application for groundwater withdrawal of up to 0.071 mgd from Reeser Well 1.

17. *Project Sponsor:* United Water PA. Project Facility: Newberry System, Newberry Township, York County, Pa. Application for groundwater withdrawal of up to 0.071 mgd from Reeser Well 2.

18. *Project Sponsor:* United Water PA. Project Facility: Newberry System, Newberry Township, York County, Pa. Application for groundwater withdrawal of up to 0.072 mgd from Susquehanna Village Well 1.

19. *Project Sponsor:* United Water PA. Project Facility: Newberry System, Newberry Township, York County, Pa. Application for groundwater withdrawal of up to 0.072 mgd from Susquehanna Village Well 2.

20. P*roject Sponsor and Facility:* Walker Township Water Association, Walker Township, Centre County, Pa. Modification to increase the total groundwater system withdrawal limit (30-day average) from 0.523 mgd to 0.962 mgd (Docket No. 20070905).

Public Hearing—Projects Scheduled for Action Involving a Diversion:

1. *Project Sponsor:* Chester County Solid Waste Authority. Project Facility: Lanchester Landfill, Salisbury and Caernarvon Townships, Lancaster County, Pa. Application for an existing into-basin diversion of up to 0.050 mgd from the Delaware River Basin.

2. *Project Sponsor:* EOG Resources, Inc. Project Facility: Blue Valley AMD Treatment Plant, Horton Township, Elk County, Pa. Application for an into-basin diversion of up to 0.322 mgd from the Ohio River Basin.

Public Hearing—Amendments to Regulatory Program Fee Schedule:

Staff is proposing certain amendments to the Regulatory Program Fee Schedule intended to clarify the application of fees to certain projects.

Opportunity to Appear and Comment: Interested parties may appear at the above hearing to offer written or oral comments to the Commission on any matter on the hearing agenda, or at the business meeting to offer written or oral comments on other matters scheduled for consideration at the business meeting. The chair of the Commission reserves the right to limit oral statements in the interest of time and to otherwise control the course of the hearing and business meeting. Written comments may also be mailed to the Susquehanna River Basin Commission, 1721 North Front Street, Harrisburg, Pennsylvania 17102–2391, or submitted electronically to Richard A. Cairo, General Counsel, e-mail: *rcairo@srbc.net* or Stephanie L. Richardson, Secretary to the Commission, e-mail: *srichardson@srbc.net.* Comments mailed or electronically submitted must be received prior to June 4, 2010, to be considered.

Authority: Pub. L. 91–575, 84 Stat. 1509 *et seq.,* 18 CFR parts 806, 807, and 808.

Dated: May 11, 2010.

Thomas W. Beauduy,

Deputy Director.

[FR Doc. 2010–12348 Filed 5–21–10; 8:45 am]

BILLING CODE 7040–01–P

DEPARTMENT OF TRANSPORTATION

Pipeline and Hazardous Materials Safety Administration

Office of Hazardous Materials Safety; Notice of Application for Special Permits

AGENCY: Pipeline and Hazardous Materials Safety Administration (PHMSA), DOT.

ACTION: List of applications for special permits.

SUMMARY: In accordance with the procedures governing the application for, and the processing of, special permits from the Department of Transportation's Hazardous Material Regulations (49 CFR part 107, subpart B), notice is hereby given that the Office of Hazardous Materials Safety has received the application described herein. Each mode of transportation for which a particular special permit is requested is indicated by a number in the "Nature of Application" portion of the table below as follows: 1—Motor vehicle, 2—Rail freight, 3—Cargo vessel,

4—Cargo aircraft only, 5—Passenger-carrying aircraft.

DATES: Comments must be received on or before June 23, 2010.

Address Comments To: Record Center, Pipeline and Hazardous Materials Safety Administration, U.S. Department of Transportation, Washington, DC 20590.

Comments should refer to the application number and be submitted in triplicate. If confirmation of receipt of comments is desired, include a self-addressed stamped postcard showing the special permit number.

FOR FURTHER INFORMATION CONTACT: Copies of the applications are available for inspection in the Records Center, East Building, PHH–30, 1200 New Jersey Avenue, SE., Washington DC or at *http://regulations.gov.*

This notice of receipt of applications for special permit is published in accordance with Part 107 of the Federal hazardous materials transportation law (49 U.S.C. 5117(b); 49 CFR 1.53(b)).

Issued in Washington, DC, on May 17, 2010.

Delmer F. Billings,

Director, Office of Hazardous Materials, Special Permits and Approvals.

NEW SPECIAL PERMITS

Application No.	Docket No.	Applicant	Regulation(s) affected	Nature of special permits thereof
14995–N		Grasshopper Aviation, LLC, Wasilla, AK.	49 CFR 172.101 Column (9B).	To authorize the transportation in commerce of certain Class I explosive materials which are forbidden for transportation by air, to be transported by cargo aircraft within the State of Alaska when other means of transportation are impracticable or not available (mode 4).
14999–N		Classic Helicopters Limited, L.C., Woods Cross, UT.	49 CFR 172.101 Column (9B), 172.204(c)(3), 173.27(b)(2), 175.30(a)(1), 172.200, 172.300, 172.400 and 175.75.	To authorize the transportation in commerce of certain hazardous materials by Part 133 Rotorcraft External Load Operations, attached to or suspended from an aircraft, in remote areas of the U.S. without meeting certain hazard communication and stowage requirements (mode 4).
15000–N		FIBA Technologies, Inc., Millbury, MA.	49 CFR 180.205(f) and (g) 180.209(a).	To authorize the transportation in commerce of certain hazardous materials in DOT Specification 3AL cylinders manufactured from aluminum alloy 6061–T6 that are requalified every ten years rather than every five years using 100% ultrasonic examination (modes 1, 2, 3,4, 5).
15001–N		Worthington Cylinder Corporation, Columbus, OH.	49 CFR 178.65(i) and 172.202(a)(1) and (a)(2).	To authorize the transportation in commerce of DOT Specification 39 cylinders without meeting certain marking requirements by private or contract motor carrier (mode 1).
15002–N		StarLite Propane Gas Corporation, Bay Shore, NY.	49 CFR 172.400 and 173.29.	To authorize the transportation in commerce of DOT-specification cylinders containing propane without the required labels provided each transport vehicle is marked and placarded (mode 1).
15003–N		Gebauer Company, Cleveland, OH.	49 CFR 173.306(a)(1)	To authorize the manufacture, marking, sale and use of a DOT 2P inner metal receptacle with a 4.7-ounce capacity for the transportation in commerce of ethyl chloride as a consumer commodity (modes 1, 2, 3).
15004–N		Zotos International, Inc., Geneva, NY.	49 CFR 173.306(a)(3)(v)	To authorize the transportation in commerce of DOT Specification 2P non-refillable aluminum inside containers which have been subject to an automated pressure test on the line in lieu of the hot water bath test (mode 1).

[FR Doc. 2010–12346 Filed 5–21–10; 8:45 am]

BILLING CODE 4909–60–M

DEPARTMENT OF TRANSPORTATION

Federal Highway Administration

Notice of Final Federal Agency Actions on Proposed Highway in Washington

AGENCY: Federal Highway Administration (FHWA), DOT.

ACTION: Notice of limitation on claims for judicial review of actions by FHWA.

SUMMARY: This notice announces actions taken by the FHWA that are final within the meaning of 23 U.S.C. 139(l)(1). The actions relate to a proposed highway project, the SR 520, Medina to SR 202: Eastside Transit and HOV Project, in the State of Washington. Those actions grant approval for the project.

DATES: By this notice, the FHWA is advising the public of final agency actions subject to 23 U.S.C. 139(l)(1). A claim seeking judicial review of the Federal agency actions on the highway project will be barred unless the claim is filed within 180 days of the date of publication of this notice. If the Federal law that authorizes judicial review of a claim provides a time period of less than 180 days for filing such claim, then that shorter time period still applies.

FOR FURTHER INFORMATION CONTACT: Randolph Everett, Major Projects Oversight Manager, Federal Highway Administration, Jackson Federal Building, 915 2nd Avenue, Room 3142, Seattle, Washington 98174; telephone: (206) 220–7538; and e-mail: *randolph.everett@dot.gov.* The FHWA Washington Division's Oversight Manager's regular office hours are between 8 a.m. and 4:30 p.m. (Pacific Time). You may also contact Allison Hanson, Director of Environmental Services—Mega Projects, SR 520 Bridge Replacement and HOV Program Office, 600 Stewart Street, Suite 520, Seattle, Washington 98101; telephone: 206–382–5279; and e-mail:

HansonA@wsdot.wa.gov. The SR 520 Project's regular office hours are between 8 a.m. and 5 p.m. (Pacific Time).

SUPPLEMENTARY INFORMATION: Notice is hereby given that the FHWA has taken final agency actions by issuing approval for the following highway project: The SR 520, Medina to SR 202: Eastside Transit and HOV Project. The purpose of the project is to enhance transit time reliability, mobility, access, and safety for transit and carpools in the rapidly growing areas along the SR 520 corridor east of Lake Washington. The project limits extend approximately 8.8 miles along SR 520 from the east shore of Lake Washington at Evergreen Point Road to the interchange at SR 202 in Redmond. The project spans the communities of Medina, Hunts Point, Yarrow Point, Clyde Hill, Kirkland, Bellevue, and Redmond.

The actions by the FHWA on this project, and the laws under which such actions were taken, are described in the December 2009 Environmental Assessment (EA), May 2010 Updated EA, May 2010 Finding of No Significant Impact (FONSI), and in other documents in the FHWA administrative record for the project. The EA, Updated EA, FONSI and other documents in the FHWA administrative record are available by contacting the FHWA or the Washington State Department of Transportation at the addresses provided above.

The EA, Updated EA, and FONSI can be viewed and downloaded from the project Web site at *http://wsdot.wa.gov/Projects/SR520Bridge/*or viewed at local libraries in the project area.

This notice applies to all Federal agency decisions on the project as of the issuance date of this notice and all laws under which such actions were taken, including but not limited to:

1. *General:* National Environmental Policy Act [42 U.S.C. 4321–4347]; Federal-Aid Highway Act [23 U.S.C. 109].
2. *Air:* Clean Air Act, as amended [42 U.S.C. 7401–7671(q)].
3. *Land:* Section 4(f) of the Department of Transportation Act of 1966 [49 U.S.C. 303].
4. *Wildlife:* Endangered Species Act [16 U.S.C. 1531–1544]; Section 7 of the Endangered Species Act [16 U.S.C. 1536]; Anadromous Fish Conservation Act [16 U.S.C. 757(a)–757(g)]; Fish and Wildlife Coordination Act [16 U.S.C. 661–667(d)]; Magnuson-Stevenson Fishery Conservation and Management Act of 1976, as amended [16 U.S.C. 1801 *et seq.*].
5. Historic and Cultural Resources: Section 106 of the National Historic Preservation Act of 1966, as amended [16 U.S.C. 470(f) *et seq.*]; Archaeological and Historic Preservation Act [16 U.S.C. 469–469(c)].
6. Social and Economic: Civil Rights Act of 1964 [42 U.S.C. 2000(d)–2000(d)(1)]; the Uniform Relocation Assistance and Real Property Acquisition Policies Act of 1970, as amended [42 U.S.C. Chapter 61].
7. Wetlands and Water Resources: Section 7 of the Endangered Species Act [16 U.S.C. 1536]; Clean Water Act, (Section 319 [33 U.S.C. 1329]); Coastal Zone Management Act [16 U.S.C. 1451]; Safe Drinking Water Act [42 U.S.C. 300(f)–300(j)(6)]; Rivers and Harbors Act of 1899 [33 U.S.C. 403–407].
8. Hazardous Materials: Comprehensive Environmental Response, Compensation, and Liability Act [42 U.S.C. 9601–9675]; Resource Conservation and Recovery Act [42 U.S.C. 6901–6992(k)].
9. Executive Orders: E.O. 11990 Protection of Wetlands; E.O. 11988 Floodplain Management; E.O. 12898, Federal Actions to Address Environmental Justice in Minority Populations and Low Income Populations; E.O. 11593 Protection and Enhancement of Cultural Resources; E.O. 13007 Indian Sacred Sites; E.O. 13287 Preserve America; E.O. 13175 Consultation and Coordination with Indian Tribal Governments; E.O. 11514 Protection and Enhancement of Environmental Quality; E.O. 13112 Invasive Species.

(Catalog of Federal Domestic Assistance Program Number 20.205, Highway Planning and Construction. The regulations implementing Executive Order 12372 regarding intergovernmental consultation on Federal programs and activities apply to this program.)

Authority: 23 U.S.C. 139(l)(1).

Issued on: May 17, 2010.

Daniel M. Mathis,

Division Administrator, Olympia, Washington.

[FR Doc. 2010–12353 Filed 5–21–10; 8:45 am]

BILLING CODE 4910–RY–P

DEPARTMENT OF TRANSPORTATION

Federal Aviation Administration

Ninth Meeting: Joint RTCA Special Committee 213: EUROCAE WG–79: Enhanced Flight Vision Systems/Synthetic Vision Systems (EFVS/SVS)

AGENCY: Federal Aviation Administration (FAA), DOT.

ACTION: Notice of Joint RTCA Special Committee 213: EUROCAE WG–79: Enhanced Flight Vision Systems/Synthetic Vision Systems (EFVS/SVS).

SUMMARY: The FAA is issuing this notice to advise the public of a meeting of Joint RTCA Special Committee 213: EUROCAE WG–79: Enhanced Flight Vision Systems/Synthetic Vision Systems (EFVS/SVS).

DATES: The meeting will be held June 15–16, 2010. from 8:30 a.m.–5 p.m. (0830–1700).

ADDRESSES: The meeting will be held at the RTCA Headquarters, 1828 L Street, NW., Suite 805, Washington, DC 20036, 202–833–9339.

Objective: Objective is completion of comment disposition from Final Review and Comment (FRAC) period of draft MASPS for EFVS approach and landing.

FOR FURTHER INFORMATION CONTACT: (1) RTCA Secretariat, 1828 L Street, NW., Suite 805, Washington, DC 20036; telephone (202) 833–9339; fax (202) 833–9434; Web site *http://www.rtca.org.*

SUPPLEMENTARY INFORMATION: Pursuant to section 10(a) (2) of the Federal Advisory Committee Act (P.L. 92–463, 5 U.S.C., Appendix 2), notice is hereby given for a Joint RTCA Special Committee 213: EUROCAE WG–79: Enhanced Flight Vision Systems/Synthetic Vision Systems (EFVS/SVS) meeting. The agenda will include:

Tuesday, 15 June

- Plenary (0830–1700, including breaks and lunch).
- Review comments.
- Topic: Enhanced Flight Vision.

Wednesday, 16 June

- Plenary (0900–1700, including breaks and lunch).
- Review comments.

Attendance is open to the interested public but limited to space availability. With the approval of the chairmen, members of the public may present oral statements at the meeting. Persons wishing to present statements or obtain information should contact the person listed in the "**FOR FURTHER INFORMATION CONTACT**" section. Members of the public may present a written statement to the committee at any time.

Issued in Washington, DC, on May 17, 2010.

Francisco Estrada C.,

RTCA Advisory Committee.

[FR Doc. 2010–12359 Filed 5–21–10; 8:45 am]

BILLING CODE 4910–13–P

DEPARTMENT OF THE TREASURY

Submission for OMB Review; Comment Request

May 17, 2010.

The Department of the Treasury will submit the following public information collection requirements to OMB for review and clearance under the Paperwork Reduction Act of 1995, Public Law 104–13 on or after the date of publication of this notice. A copy of the submissions may be obtained by calling the Treasury Bureau Clearance Officer listed. Comments regarding these information collections should be addressed to the OMB reviewer listed and to the Treasury PRA Clearance Officer, Department of the Treasury, 1750 Pennsylvania Avenue, NW., Suite 11010, Washington, DC 20220.

DATES: Written comments should be received on or before June 23, 2010 to be assured of consideration.

Internal Revenue Service (IRS)

OMB Number: 1545–0007.

Type of Review: Extension without change of a currently approved collection.

Title: Forest Activities Schedule.

Form: T (Timber).

Abstract: Form T is filed by individuals and corporations to report income and deductions from the operation of a timber business. The IRS uses Form T to determine if the correct amounts of income and deductions are reported.

Respondents: Private Sector: Businesses or other for-profits.

Estimated Total Burden Hours: 446,208 hours.

OMB Number: 1545–0044.

Type of Review: Extension without change of a currently approved collection.

Title: Corporation Claim for Deduction for Consent Dividends.

Form: 973.

Abstract: Corporations file Form 973 to claim a deduction for dividends paid. If shareholders consent and IRS approves, the corporation may claim a deduction for dividends paid, which reduces the corporation's tax liability. IRS uses Form 973 to determine if shareholders have included the dividend in gross income.

Respondents: Private Sector: Businesses or other for-profits.

Estimated Total Burden Hours: 2,210 hours.

OMB Number: 1545–1813.

Type of Review: Extension without change of a currently approved collection.

Title: Form 1099–H, Health Coverage Tax Credit (HCTC) Advance Payments.

Form: 1099–H.

Abstract: Form 1099–H is used to report advance payments of health insurance premiums to qualified recipients for their use in computing the allowable health insurance credit on Form 8885.

Respondents: Private Sector: Businesses or other for-profits.

Estimated Total Burden Hours: 33,000 hours.

OMB Number: 1545–1981.

Type of Review: Extension without change of a currently approved collection.

Title: Alternative Fuel Vehicle Refueling Property Credit.

Form: 8911.

Abstract: IRC section 30C allows a credit for alternative fuel vehicle refueling property. Form 8911 will be used by taxpayers to claim the credit.

Respondents: Private Sector: Businesses or other for-profits.

Estimated Total Burden Hours: 3,715,083 hours.

OMB Number: 1545–2031.

Type of Review: Extension without change of a currently approved collection.

Title: Railroad Track Maintenance Credit (REG–142770–05).

Abstract: This document contains regulations that provide rules for claiming the railroad track maintenance credit under section 45G of the Internal Revenue Code for qualified railroad track maintenance expenditures paid or incurred by a Class II or Class III railroad and other eligible taxpayers during the taxable year. These regulations reflect changes to the law made by the American Jobs Creation Act of 2004 and the Gulf Opportunity Zone Act of 2005.

Respondents: Private Sector: Businesses or other for-profits.

Estimated Total Burden Hours: 1,375 hours.

OMB Number: 1545–2158.

Type of Review: Extension without change of a currently approved collection.

Title: Production Tax Credit for Refined Coal (Notice 2009–90).

Abstract: This notice sets forth interim guidance pending the issuance of regulations relating to the tax credit under § 45 of the Internal Revenue Code (Code) for refined coal.

Respondents: Private Sector: Businesses or other for-profits.

Estimated Total Burden Hours: 1,500 hours.

OMB Number: 1545–2159.

Type of Review: Extension without change of a currently approved collection.

Title: Form 56–F, Notice Concerning Fiduciary Relationship of Financial Institution.

Form: 56–F.

Abstract: The filing of Form 56–F by a fiduciary (FDIC or other Federal agency acting as a receiver or conservator of a failed financial institution (bank or thrift) gives the IRS the necessary information to submit send letters, notices, and notices of tax liability to the Federal fiduciary now in charge of the financial institution rather than sending the notice, *etc.* to the institution's last known address.

Respondents: Private Sector: Businesses or other for-profits.

Estimated Total Burden Hours: 997 hours.

Bureau Clearance Officer: R. Joseph Durbala, Internal Revenue Service, 1111 Constitution Avenue, NW., Room 6129, Washington, DC 20224; (202) 622–3634.

OMB Reviewer: Shagufta Ahmed, Office of Management and Budget, New Executive Office Building, Room 10235, Washington, DC 20503; (202) 395–7873.

Dawn D. Wolfgang,

Treasury PRA Clearance Officer.

[FR Doc. 2010–12441 Filed 5–21–10; 8:45 am]

BILLING CODE 4830–01–P

DEPARTMENT OF THE TREASURY

Internal Revenue Service

Quarterly Publication of Individuals, Who Have Chosen To Expatriate, as Required by Section 6039G

AGENCY: Internal Revenue Service (IRS), Treasury.

ACTION: Notice.

SUMMARY: This notice is provided in accordance with IRC section 6039G, as amended, by the Health Insurance Portability and Accountability Act (HIPPA) of 1996. This listing contains the name of each individual losing their United States citizenship (within the meaning of section 877(a) or 877A) with respect to whom the Secretary received information during the quarter ending March 31, 2010.

Last name	First name	Middle name/initials
AKHAVAN	SEPEHR	
AMBANI	AKASH	MUKESH
AMBANI	ISHA	MUKESH
BENSTED	JOHN	MALCOLM
BERMAN	JACQUELINE	FAY
BHARWANEY	NEEL	K
BISHOP	MARGARET	
BISHOP	JEREMY	C
BURMESTER	ROLF	W
CALLAHAN	SUN	IM
CHAN	SAMUEL	
CHAN	KEVEN	TIN YAU
CHAN	JOYCE	YET–WUN
CHANG	KAREN	YI–FEN
CHAU	LING	TING
CHEN	LYNEN	
CHEN	SU–JANE	
CHEN	VICTOR	
CHEN	MICHAEL	JEN–KWEI
CHENG	KENNY	
CHEONG	JUNE	CHENG
CHIN	WILLIAM	KUO FENG
CHOA	JAMES	MICHAEL
CHU–YIP	PANCY	SIU LING
CLARK	RONALD	I
CLARKE	DAVID	N
CURLEY	RENATE	H
DARD	GILLES	
DE TREY	LORRAINE	ANNE
DECKER	MARGARET	
DEUCHER	FIONA	CLARINA
DEUCHER	ANNINA	XENIA CONCHITA
DEVOURDY	CHRISTINE	
DODDS	BARRY	A
DUDLEY	SON	YONG
DUNN	PAUL	S
DUPREZ	DANIELLE	HELENE
EGGENSCHWILER	ARIANE	MICHELLE
EHLERS	ERIC	ANDREW
ENNS	KIMBERLEY	D
FANG	CHARLES	
FAYE–SCHJOLL	LISE	KAREN
FERREIRA	DELFINO	COVINHA
FISCHER HIRS	CHRISTOPH	THOMAS
FISHER	SUSAN	
FISHER	JAMES	L
FORRER	THOMAS	JAMES
FORSTER	PAUL	WHITFIELD
FOX	SALLY	GOERS
FRAZIER	DACEIA	CHARMAYNE
FUJIWARA	NORIKO	
GOBLET	BERNARD	
GONSALVES	PRISCILLA	TAPLEY
GUTIERREZ	NOEMI	C
GUTIERREZ	CARLOS	R
HASANDKA	THIRUMALESHWARA	
HAUSSMANN	WILLIAM	FREDERICK
HAYASHI	PAUL	M.
HECKNER	MICHAEL	JOHANNES
HELLMAN	LISA	JANE
HELLMAN–MERZBACHER	JESSICA	
HENTSCH	NIKOLAI	
HO	EUNICE	YUK LING
HOTTINGER	PETER	A
HUANG	YU–CHING	
IKEDA	MAKIKO	
ISHERWOOD	JASON	SCOTT
ITO	KAZUHIKO	
IVSAN	JOHN	VINCENT
JENSEN	CARL	CHRISTIAN
JOU	JING–YANG	
JUNCZYK–ZIOMECKI	EWA	
KANGA	MEHER	
KATO	MASAYA	

Last name	First name	Middle name/initials
KIM	DOHYONG	
KIMURA	MASAKO	
KIMURA	YASUHIRO	
KNOX	RONALD	PRESTON
KOLOVRAT	ELIZABETH	
KULLBERG	CHRISTER	ANDREAS
KWOK	JENNIFER	
LADANYI	HANS	GEORG
LAMPE	ARNO	
LAUREYNS	VEERLE	A
LEBECH	LISA	MARGARET
LEE	YOONBOK	STEPHEN
LEHMANN	ALEXANDER	
LENTHALL	MICHAEL	G
LIMPENS	MARIA	G
LIN	CHOW–MING	
LIU	JEN	
LUDWIG	ROBERT	SANFORD
MADALIJNS	RUDI	
MAK	CLIFFORD	SIU WING
MARTORANO	ZABIDAH	HASIM
MATSUO	TOSHIAKI	
MATSUZAKI	CHIKARA	
MERZBACHER	KARIN	
MERZBACHER	THOMAS	
MEYER–LIEW	ERICA	RUTH
MILLE	KARINA	
MOLLER	KIRSTEN	
MOLYNEUX–CARTER	EMMA	ELIZABETH
MOLYNEUX–CARTER	JAMES	JOHN
MORANT JR	PAUL	
MU	DEJUN	
MULLER	SIGRID	SIMONS
NEDOLUHA	DAVID	A
NEDOLUHA	PATRICIA	E
NEDOLUHA	KEVIN	P
NGAN	MELODY	T
NIENABER	GAWIE	M
NORTON	CHRISTOPHER	WINTHROP
O'DOHERTY	DEIRDRE	MARY
OLDE	ERIKA	JANE
OR	BRIAN	PATRICK
ORMROD	JAMES	
PARKER	RICHARD	L
PEEK	MARISA	NICOLE
PETTERSON	MELVIN	PETTER
PIASENTE–FOLIGNO	MASSIMO	
PICARD	AZUCENA	
PINDER	LEO	RYAN
POTE	KENNETH	C
POTE	MARION	N
QUENNOY	ERIC	ARTHUR
REGO	JOSEPH	M
REITER	MATTHEW	THOMAS
RIIS–JOHANNESSEN	THOMAS	
ROBINSON	NAN	RUSSELL
ROTTMANN	THOMAS	C. K.
ROUSSEAU	LOUISA	WONG
RUFER	DANIEL	HANS
SABA	HAFID	MEKKI
SCHAUB	SHAWN	
SCHEULLER	AMOS	
SCHREINER	ANJA	
SCHREINER	RAY	M
SCHUTTE	OLIVER	ROGER
SETIAWAN	BUDI	R
SHEHABI	HASHEM	KAZI
SHIH	JOHN	ZAOMING
SHIKAMA	KOJI	
SHUNG	E–FUI	
SIMPSON	JUSTIN	S
SKABO	KEVIN	CHRISTOPHER
SLOSAR	JOHN	ROBERT
SOEKEFELD	ELISABETH	

Last name	First name	Middle name/initials
SOLLER	EMIL	
SOTELO	CAROLYN	J
SUH	JINOOK	PAUL
SUNG	TAE	PHYO
SWIJTINK	JORIS	DAEDALUS
TALAAT	TAMER	NASR
TALAAT–SCHNORF	SUSANNE	NANCY
TARAZI	PIERRE	ANTOINE
TRABAND	ELEONORE	A
TSAI	JOSEPH	T
TSE	KEVIN	WING KIN
TSUI	EDWARD	KA HING
VILLEVIEILLE	JEAN–LUC	
WAI	NELSON	J
WALTER	CORINE	CHRISTINE
WANG	SHUI	MING
WATERS	MICHAEL	
WATERS	SUSAN	
WEBB	CANDACE	CYNTHIA
WEBER	KLAUS	WOLFGANG
WEISS	KENNETH	CHRISTOPHER
WENG	LI SCHUANG	
WILSON	SIMON	MARK
WONG	ALAN	
WONG	ANTON	CHUN NAM
WONG	ESTHER	KA–LING
WONG	KAR	WING CLARA
WU	KUNHER	
YOSHIKAWA	TETSUJI	
YU	HENRY	C F
YU	COLLEEN	M

Dated: April 30, 2010.

Angie Kaminski,

Manager Team 103, Examinations Operations—Philadelphia Compliance Services.

[FR Doc. 2010–12333 Filed 5–21–10; 8:45 am]

BILLING CODE 4830–01–P

DEPARTMENT OF VETERANS AFFAIRS

[OMB Control No. 2900–0619]

Agency Information Collection (IRIS) Activities Under OMB Review

AGENCY: Office of Information and Technology, Department of Veterans Affairs.

ACTION: Notice.

SUMMARY: In compliance with the Paperwork Reduction Act (PRA) of 1995 (44 U.S.C. 3501–3521), this notice announces that the Office of Information and Technology, Department of Veterans Affairs, will submit the collection of information abstracted below to the Office of Management and Budget (OMB) for review and comment. The PRA submission describes the nature of the information collection and its expected cost and burden and includes the actual data collection instrument.

DATES: Comments must be submitted on or before June 23, 2010.

ADDRESSES: Submit written comments on the collection of information through *http://www.Regulations.gov*; or to VA's OMB Desk Officer, OMB Human Resources and Housing Branch, New Executive Office Building, Room 10235, Washington, DC 20503; (202) 395–7316. Please refer to "OMB Control No. 2900–0619" in any correspondence.

For Further Information or a Copy of the Submission Contact: Denise McLamb, Enterprise Records Service (005R1B), Department of Veterans Affairs, 810 Vermont Avenue, NW., Washington, DC 20420, (202) 461–7485, FAX (202) 273–0443 or e-mail: *denise.mclamb@va.gov*. Please refer to "OMB Control No. 2900–0619."

SUPPLEMENTARY INFORMATION:

Title: Inquiry Routing and Information System (IRIS).

OMB Control Number: 2900–0619.

Type of Review: Extension of a currently approved collection.

Abstract: The World Wide Web is a powerful media for the delivery of information and services to veterans, dependents, and active duty personnel worldwide. IRIS allows a customer to submit questions, complaints, compliments, and suggestions directly to the appropriate office at any time and receive an answer more quickly than through standard mail. IRIS does not provide applications to veterans or serve as a conduit for patient data.

An agency may not conduct or sponsor, and a person is not required to respond to, a collection of information unless it displays a currently valid OMB control number. The **Federal Register** Notice with a 60-day comment period soliciting comments on this collection of information was published on March 18, 2010, at pages 13208–13209.

Affected Public: Individuals or Households.

Estimated Annual Burden: 60,000 hours.

Estimated Average Burden Per Respondent: 10 minutes.

Frequency of Response: Monthly.

Estimated Number of Respondents: 360,000.

Dated: May 19, 2010.

By direction of the Secretary.

Denise McLamb,

Program Analyst, Enterprise Records Service.

[FR Doc. 2010–12428 Filed 5–21–10; 8:45 am]

BILLING CODE 8320–01–P

DEPARTMENT OF VETERANS AFFAIRS

[OMB Control No. 2900–0117]

Agency Information Collection (Inquiry Concerning Applicant for Employment) Activities Under OMB Review

AGENCY: Office of Human Resources and Administration, Department of Veterans Affairs.

ACTION: Notice.

SUMMARY: In compliance with the Paperwork Reduction Act (PRA) of 1995 (44 U.S.C. 3501–3521), this notice announces that the Office of Human Resources and Administration, Department of Veterans Affairs, will submit the collection of information abstracted below to the Office of Management and Budget (OMB) for review and comment. The PRA submission describes the nature of the information collection and its expected cost and burden; it includes the actual data collection instrument.

DATES: Comments must be submitted on or before June 23, 2010.

ADDRESSES: Submit written comments on the collection of information through *http://www.Regulations.gov;* or to VA's OMB Desk Officer, OMB Human Resources and Housing Branch, New Executive Office Building, Room 10235, Washington, DC 20503 (202) 395–7316. Please refer to "OMB Control No. 2900–0117" in any correspondence.

For Further Information or a Copy of the Submission Contact: Denise McLamb, Enterprise Records Service (005R1B), Department of Veterans Affairs, 810 Vermont Avenue, NW., Washington, DC 20420, (202) 461–7485, FAX (202) 273–0443 or e-mail: *denise.mclamb@va.gov.* Please refer to "OMB Control No. 2900–0117."

SUPPLEMENTARY INFORMATION:

Title: Inquiry Concerning Applicant for Employment, VA Form Letter 5–127.

OMB Control Number: 2900–0117.

Type of Review: Extension of a currently approved collection.

Abstract: VA Form Letter 5–127 is used to verify qualification for employment at VA. This information is obtained from individuals who have knowledge of the applicants' past work record, performance, and character.

An agency may not conduct or sponsor, and a person is not required to respond to a collection of information unless it displays a currently valid OMB control number. The **Federal Register** Notice with a 60-day comment period soliciting comments on this collection of information was published on March 18, 2010, at pages 13210–13211.

Affected Public: Business or other for-profit.

Estimated Annual Burden: 3,125 hours.

Estimated Average Burden per Respondent: 15 minutes.

Frequency of Response: One-time.

Estimated Number of Respondents: 12,500.

Dated: May 19, 2010.

By direction of the Secretary:

Denise McLamb,

Enterprise Records Service.

[FR Doc. 2010–12429 Filed 5–21–10; 8:45 am]

BILLING CODE 8320–01–P

DEPARTMENT OF VETERANS AFFAIRS

[OMB Control No. 2900–0586]

Agency Information Collection (Technical Industry Standards) Activities Under OMB Review

AGENCY: Office of Acquisition and Logistics, Department of Veterans Affairs.

ACTION: Notice.

SUMMARY: In compliance with the Paperwork Reduction Act (PRA) of 1995 (44 U.S.C. 3501–3521), this notice announces that the Office of Acquisition and Materiel Management, Department of Veterans Affairs, will submit the collection of information abstracted below to the Office of Management and Budget (OMB) for review and comment. The PRA submission describes the nature of the information collection and its expected cost and burden; it includes the actual data collection instrument.

DATES: Comments must be submitted on or before June 23, 2010.

ADDRESSES: Submit written comments on the collection of information through *http://www.Regulations.gov;* or to VA's OMB Desk Officer, OMB Human Resources and Housing Branch, New Executive Office Building, Room 10235, Washington, DC 20503, (202) 395–7316. Please refer to "OMB Control No. 2900–0586" in any correspondence.

FOR FURTHER INFORMATION OR A COPY OF THE SUBMISSION CONTACT: Denise McLamb, Enterprise Records Service (005R1B), Department of Veterans Affairs, 810 Vermont Avenue, NW., Washington, DC 20420, (202) 461–7485, FAX (202) 273–0443 or e-mail: *denise.mclamb@mail.va.gov.* Please refer to "OMB Control No. 2900–0586."

SUPPLEMENTARY INFORMATION:

Title: Veterans Affairs Acquisition Regulation (VAAR) Provision 852.211–75, Technical Industry Standards.

OMB Control Number: 2900–0586.

Type of Review: Extension of a currently approved collection.

Abstract: VAAR provision 852.211–75, Technical Industry Standards, requires that items offered for sale to VA under the solicitation conform to certain technical industry standards, such as Underwriters Laboratory (UL) or the National Fire Protection Association, and that the contractor furnish evidence to VA that the items meet that requirement. The evidence is normally in the form of a tag or seal affixed to the item, such as the UL tag on an electrical cord or a tag on a fire-rated door. This requires no additional effort on the part of the contractor, as the items come from the factory with the tags already in place, as part of the manufacturer's standard manufacturing operation. Occasionally, for items not already meeting standards or for items not previously tested, a contractor will have to furnish a certificate from an acceptable laboratory certifying that the items furnished have been tested in accordance with, and conform to, the specified standards. Only firms whose products have not previously been tested to ensure the products meet the industry standards required under the solicitation will be required to submit a separate certificate. The information will be used to ensure that the items being purchased meet minimum safety standards and to protect VA employees, VA beneficiaries, and the public.

An agency may not conduct or sponsor, and a person is not required to respond to a collection of information unless it displays a currently valid OMB control number. The **Federal Register** Notice with a 60-day comment period soliciting comments on this collection of information was published on March 18, 2010, at pages 13209–13210.

Affected Public: Business or other for profit.

Estimated Annual Burden: 50 hours.

Estimated Average Burden per Respondent: 30 minutes.

Frequency of Response: On occasion.

Estimated Number of Respondents: 100.

Dated: May 19, 2010.

By direction of the Secretary.

Denise McLamb,

Program Analyst, Enterprise Records Service.

[FR Doc. 2010–12430 Filed 5–21–10; 8:45 am]

BILLING CODE P

DEPARTMENT OF VETERANS AFFAIRS

[OMB Control No. 2900–0587]

Agency Information Collection (Service Data Manual) Activities Under OMB Review

AGENCY: Office of Acquisition and Logistics, Department of Veterans Affairs.

ACTION: Notice.

SUMMARY: In compliance with the Paperwork Reduction Act (PRA) of 1995 (44 U.S.C. 3501–3521), this notice announces that the Office of Acquisition and Materiel Management, Department of Veterans Affairs, will submit the collection of information abstracted below to the Office of Management and Budget (OMB) for review and comment. The PRA submission describes the nature of the information collection and its expected cost and burden; it includes the actual data collection instrument.

DATES: Comments must be submitted on or before June 23, 2010.

ADDRESSES: Submit written comments on the collection of information through *http://www.Regulations.gov;* or to VA's OMB Desk Officer, OMB Human Resources and Housing Branch, New Executive Office Building, Room 10235, Washington, DC 20503, (202) 395–7316. Please refer to "OMB Control No. 2900–0587" in any correspondence.

FOR FURTHER INFORMATION OR A COPY OF THE SUBMISSION CONTACT: Denise McLamb, Enterprise Records Service (005R1B), Department of Veterans Affairs, 810 Vermont Avenue, NW., Washington, DC 20420, (202) 461–7485, FAX (202) 273–0443 or e-mail: *denise.mclamb@va.gov.* Please refer to "OMB Control No. 2900–0587."

SUPPLEMENTARY INFORMATION:

Title: Veterans Affairs Acquisition Regulation (VAAR) Clause 852.211–70, Service Data Manual (previously 852.210–70).

OMB Control Number: 2900–0587.

Type of Review: Extension of a currently approved collection.

Abstract: VAAR clause 852.211–70, Service Data Manual, requires a contractor to furnish both operator's manuals and maintenance/repair manuals when technical medical equipment and devices, or mechanical equipment are provided to VA. This clause sets forth those requirements and the minimum standards the manuals must meet to be acceptable. The operator's manual will be used by the individual operating the equipment to ensure proper operation and cleaning and the maintenance/repair manual will be used by VA equipment repair staff.

An agency may not conduct or sponsor, and a person is not required to respond to a collection of information unless it displays a currently valid OMB control number. The **Federal Register** Notice with a 60-day comment period soliciting comments on this collection of information was published on March 18, 2010, at page 13210.

Affected Public: Business or other for profit and not-for-profit institutions.

Estimated Annual Burden: 2,500 hours.

Estimated Average Burden per Respondent: 10 minutes.

Frequency of Response: On occasion.

Estimated Number of Respondents: 15,000.

Dated: May 19, 2010.

By direction of the Secretary.

Denise McLamb,

Program Analyst, Enterprise Records Service.

[FR Doc. 2010–12431 Filed 5–21–10; 8:45 am]

BILLING CODE 8320–01–P

DEPARTMENT OF VETERANS AFFAIRS

[OMB Control No. 2900–0588]

Agency Information Collection (Special Notice) Activities Under OMB Review

AGENCY: Office of Acquisition and Logistics, Department of Veterans Affairs.

ACTION: Notice.

SUMMARY: In compliance with the Paperwork Reduction Act (PRA) of 1995 (44 U.S.C. 3501–3521), this notice announces that the Office of Acquisition and Materiel Management, Department of Veterans Affairs, will submit the collection of information abstracted below to the Office of Management and Budget (OMB) for review and comment. The PRA submission describes the nature of the information collection and its expected cost and burden; it includes the actual data collection instrument.

DATES: Comments must be submitted on or before June 23, 2010.

ADDRESSES: Submit written comments on the collection of information through *http://www.Regulations.gov;* or to VA's OMB Desk Officer, OMB Human Resources and Housing Branch, New Executive Office Building, Room 10235, Washington, DC 20503 (202) 395–7316. Please refer to "OMB Control No. 2900–0588" in any correspondence.

For Further Information or a Copy of the Submission Contact: Denise McLamb, Enterprise Records Service (005R1B), Department of Veterans Affairs, 810 Vermont Avenue, NW., Washington, DC 20420, (202) 461–7485, FAX (202) 273–0443 or e-mail: *denise.mclamb@va.gov.* Please refer to "OMB Control No. 2900–0588."

SUPPLEMENTARY INFORMATION:

Title: Veterans Affairs Acquisition Regulation (VAAR) Provision 852.211–74, Special Notice (previously 852.210–74).

OMB Control Number: 2900–0588.

Type of Review: Extension of a currently approved collection.

Abstract: VAAR provision 852.211–74, Special Notice, is used only in VA's telephone system acquisition solicitations and requires the contractor, after award of the contract, to submit descriptive literature on the equipment stating the equipment meets specification requirements of the solicitation.

An agency may not conduct or sponsor, and a person is not required to respond to a collection of information unless it displays a currently valid OMB control number. The **Federal Register** Notice with a 60-day comment period soliciting comments on this collection of information was published on March 18, 2010, at pages 13211–13212.

Affected Public: Business or other for profit and Not-for-profit institutions.

Estimated Annual Burden: 150 hours.

Estimated Average Burden per Respondent: 5 hours.

Frequency of Response: On occasion.

Estimated Number of Respondents: 30.

Dated: May 19, 2010.

By direction of the Secretary.

Denise McLamb,

Program Analyst, Enterprise Records Service.

[FR Doc. 2010–12432 Filed 5–21–10; 8:45 am]

BILLING CODE 8320–01–P

DEPARTMENT OF VETERANS AFFAIRS

[OMB Control No. 2900–0589]

Agency Information Collection (Purchase of Shellfish) Activities Under OMB Review

AGENCY: Office of Acquisition and Logistics, Department of Veterans Affairs.

ACTION: Notice.

SUMMARY: In compliance with the Paperwork Reduction Act (PRA) of 1995 (44 U.S.C. 3501–3521), this notice announces that the Office of Acquisition and Materiel Management, Department of Veterans Affairs, will submit the collection of information abstracted below to the Office of Management and

Budget (OMB) for review and comment. The PRA submission describes the nature of the information collection and its expected cost and burden; it includes the actual data collection instrument.

DATES: Comments must be submitted on or before June 23, 2010.

ADDRESSES: Submit written comments on the collection of information through *http://www.Regulations.gov;* or to VA's OMB Desk Officer, OMB Human Resources and Housing Branch, New Executive Office Building, Room 10235, Washington, DC 20503 (202) 395–7316. Please refer to "OMB Control No. 2900–0589" in any correspondence.

For Further Information or a Copy of the Submission Contact: Denise McLamb, Enterprise Records Service (005R1B), Department of Veterans Affairs, 810 Vermont Avenue, NW., Washington, DC 20420, (202) 461–7485, FAX (202) 273–0443 or e-mail: *denise.mclamb@va.gov.* Please refer to "OMB Control No. 2900–0589."

SUPPLEMENTARY INFORMATION:

Title: Veterans Affairs Acquisition Regulation (VAAR) Provision 852.270–3, Shellfish.

OMB Control Number: 2900–0589.

Type of Review: Extension of a currently approved collection.

Abstract: VAAR clause 852.270–3, Purchase of Shellfish, requires that a firm furnishing shellfish to VA must ensure that the shellfish is packaged in a container that is marked with the packer's State certificate number and State abbreviation. In addition, the firm must ensure that the container is tagged or labeled indicating the name and address of the approved producer or shipper, the name of the State of origin, and the certificate number of the approved producer or shipper. The information is used to ensure that shellfish purchased by VA comes from a State- and Federal-approved and inspected source.

An agency may not conduct or sponsor, and a person is not required to respond to a collection of information unless it displays a currently valid OMB control number. The **Federal Register** Notice with a 60-day comment period soliciting comments on this collection of information was published on March 18, 2010, at page 13211.

Affected Public: Business or other for profit.

Estimated Annual Burden: 17 hours.

Estimated Average Burden Per Respondent: 1 minute.

Frequency of Response: On occasion.

Estimated Number of Respondents: 1,000.

Dated: May 19, 2010.

By direction of the Secretary.

Denise McLamb,

Program Analyst, Enterprise Records Service.

[FR Doc. 2010–12433 Filed 5–21–10; 8:45 am]

BILLING CODE 8320–01–P

DEPARTMENT OF VETERANS AFFAIRS

[OMB Control No. 2900–0593]

Agency Information Collection (Caution to Bidders—Bid Envelopes) Activities Under OMB Review

AGENCY: Office of Acquisition and Logistics, Department of Veterans Affairs.

ACTION: Notice.

SUMMARY: In compliance with the Paperwork Reduction Act (PRA) of 1995 (44 U.S.C. 3501–3521), this notice announces that the Office of Acquisition and Material Management, Department of Veterans Affairs, will submit the collection of information abstracted below to the Office of Management and Budget (OMB) for review and comment. The PRA submission describes the nature of the information collection and its expected cost and burden; it includes the actual data collection instrument.

DATES: Comments must be submitted on or before June 23, 2010.

ADDRESSES: Submit written comments on the collection of information through *http://www.Regulations.gov;* or to VA's OMB Desk Officer, OMB Human Resources and Housing Branch, New Executive Office Building, Room 10235, Washington, DC 20503 (202) 395–7316. Please refer to "OMB Control No. 2900–0593" in any correspondence.

FOR FURTHER INFORMATION OR A COPY OF THE SUBMISSION CONTACT: Denise McLamb, Enterprise Records Service (005R1B), Department of Veterans Affairs, 810 Vermont Avenue, NW., Washington, DC 20420, (202) 461–7485, FAX (202) 273–0443 or e-mail: *denise.mclamb@va.gov.* Please refer to "OMB Control No. 2900–0593."

SUPPLEMENTARY INFORMATION:

Title: Veterans Affairs Acquisition Regulation (VAAR) Provision 852.214–70, Caution to Bidders—Bid Envelopes.

OMB Control Number: 2900–0593.

Type of Review: Extension of a currently approved collection.

Abstract: VAAR provision 852.214–70, Caution to Bidders—Bid Envelopes, advises bidders that it is their responsibility to ensure that their bid price cannot be ascertained by anyone prior to bid opening. It also advises bidders to identify their bids by showing the invitation number and bid opening date on the outside of the bid envelope. The information requested from bidders is needed to identify bid envelopes from other mail or packages received and to ensure the bids are delivered to the proper bid opening room on time and prior to bid opening.

An agency may not conduct or sponsor, and a person is not required to respond to a collection of information unless it displays a currently valid OMB control number. The **Federal Register** Notice with a 60-day comment period soliciting comments on this collection of information was published on March 18, 2010, at page 13212.

Affected Public: Business or other for profit.

Estimated Annual Burden: 960 hours.

Estimated Average Burden per Respondent: 10 seconds.

Frequency of Response: On occasion.

Estimated Number of Respondents: 346,000.

Dated: May 19, 2010.

By direction of the Secretary.

Denise McLamb,

Program Analyst, Enterprise Records Service.

[FR Doc. 2010–12434 Filed 5–21–10; 8:45 am]

BILLING CODE 8320–01–P

Federal Register

Monday,
May 24, 2010

Part II

Department of Labor

Occupational Safety and Health Administration

29 CFR Part 1910

Walking-Working Surfaces and Personal Protective Equipment (Fall Protection Systems); Proposed Rule

DEPARTMENT OF LABOR

Occupational Safety and Health Administration

29 CFR Part 1910

[Docket No. OSHA–2007–0072]

RIN 1218–AB80

Walking-Working Surfaces and Personal Protective Equipment (Fall Protection Systems)

AGENCY: Occupational Safety and Health Administration (OSHA), Department of Labor.

ACTION: Notice of proposed rule.

SUMMARY: OSHA proposes to revise the walking-working surfaces standards and the personal protective equipment standards in our regulations. The proposal is estimated to reduce the number of fall-related employee deaths and injuries by updating the rule to include new technology (including personal fall protection systems) and industry methods. OSHA believes that the proper use of personal fall protection systems can protect employees from injury and death due to falls to different elevations. The proposal reorganizes the rule in a clearer, more logical manner and provides greater compliance flexibility. The proposed rule is written in plain-language to make it easier to understand, thereby facilitating compliance. Additionally, the proposal increases consistency between construction, maritime, and general industry standards, and eliminates duplication.

DATES: Submit comments (including comments on the information-collection (paperwork) determination described under the section titled **SUPPLEMENTARY INFORMATION** of this document), hearing requests, and other information by August 23, 2010. All submissions must bear a postmark or provide other evidence of the submission date. (*See* the following section titled **ADDRESSES** for methods you can use in making submissions.)

ADDRESSES: Comments and hearing requests may be submitted as follows:

Electronic: Comments may be submitted electronically to *http://www.regulations.gov,* which is the Federal eRulemaking Portal. Follow the instructions online for submitting comments.

Facsimile: OSHA allows facsimile transmission of comments and hearing requests that are 10 pages or fewer in length (including attachments). Send these documents to the OSHA Docket Office at (202) 693–1648; hard copies of these documents are not required. Instead of transmitting facsimile copies of attachments that supplement these documents (*e.g.,* studies, journal articles), commenters may submit these attachments, in triplicate hard copy, to the OSHA Docket Office, Technical Data Center, Room N–2625, OSHA, U.S. Department of Labor, 200 Constitution Ave., NW., Washington, DC 20210. These attachments must clearly identify the sender's name, date, subject, and Docket ID (*i.e.,* OSHA–2007–0072) so that the Agency can attach them to the appropriate document.

Regular mail, express delivery, hand (courier) delivery, and messenger service: Submit three copies of comments and any additional material (*e.g.,* studies, journal articles) to the OSHA Docket Office, Docket ID OSHA–2007–0072 or RIN No. 1218–AB80, Technical Data Center, Room N–2625, OSHA, Department of Labor, 200 Constitution Ave., NW., Washington, DC 20210; telephone: (202) 693–2350. (OSHA's TTY number is (877) 889–5627.) Please contact the OSHA Docket Office for information about security procedures concerning delivery of materials by express delivery, hand delivery, and messenger service. The hours of operation for the OSHA Docket Office are 8:15 a.m. to 4:45 p.m., e.t.

Instructions. All submissions must include the Agency name and the OSHA Docket ID (i.e., OSHA–2007–0072). Comments and other material, including any personal information, are placed in the public docket without revision, and will be available online at *http://www.regulations.gov.* Therefore, the Agency cautions commenters about submitting statements they do not want made available to the public, or submitting comments that contain personal information (either about themselves or others) such as Social Security numbers, birth dates, and medical data.

Docket. To read or download comments or other material in the docket, go to *http://www.regulations.gov* or to the OSHA Docket Office at the address above. Documents in the docket are listed in the *http://www.regulations.gov* index; however, some information (*e.g.,* copyrighted material) is not publicly available to read or download through this Web site. All submissions, including copyrighted material, are available for inspection and copying at the OSHA Docket Office. Contact the OSHA Docket Office for assistance in locating docket submissions.

FOR FURTHER INFORMATION CONTACT:

General information and press inquiries. Contact Ms. Jennifer Ashley, Director, Office of Communications, OSHA, U.S. Department of Labor, Room N–3647, 200 Constitution Avenue, NW., Washington, DC 20210; telephone (202) 693–1999 or fax (202) 693–1634.

Technical inquiries. Contact Ms. Virginia Fitzner, Directorate of Standards and Guidance, Room N–3609, OSHA, U.S. Department of Labor, 200 Constitution Avenue, NW., Washington, DC 20210; telephone (202) 693–2052 or fax (202) 693–1663.

Copies of this Federal Register notice. Available from the OSHA Office of Publications, Room N–3101, U.S. Department of Labor, 200 Constitution Avenue, NW., Washington, DC 20210; telephone (202) 693–1888.

Electronic copies of this notice. Go to OSHA's Web site (*http://www.osha.gov*), and select "Federal Register," "Date of Publication," and then "2010."

Additional information for submitting documents. See section XI ("Public Participation") of this notice.

SUPPLEMENTARY INFORMATION:

Replacement of previously proposed rule. This proposed revision of subparts D and I replaces the proposed rules originally published in the **Federal Register** (55 FR 47660) on April 10, 1990, and republished in the **Federal Register** on May 2, 2003 (69 FR 23528).

References and exhibits. In this **Federal Register** notice, OSHA references a number of supporting materials. References to these materials are given as "Ex." followed by the number of the document (*e.g.,* Ex. 23). The referenced materials are posted in Docket Nos. OSHA–2007–0072, OSHA–S041–2006–0666 (formerly Docket No. S–041), OSHA–S029–2006–0662 (formerly Docket No. S–029), and OSHA–S057–2006–0680 (formerly Docket No. S–057) *all* of which are available at *http://www.regulations.gov.* The documents are also available at the OSHA Docket Office (*see* **ADDRESSES** section). For further information about accessing exhibits referenced in this **Federal Register** notice, *see* the "Public Participation" section of this document.

Table of Contents

I. Background
II. Analysis of Risk
III. Issues
IV. Summary and Explanation of the Proposed Rule
V. Preliminary Economic and Initial Regulatory Flexibility Screening Analysis
VI. Applicability of Existing National Consensus Standards
VII. OMB Review Under the Paperwork Reduction Act of 1995

VIII. Federalism
IX. State Plan States
X. Unfunded Mandates Reform Act
XI. Public Participation
XII. Authority and Signature
XIII. Proposed Regulatory Text

I. Background

The majority of employees in general industry workplaces walk or work on level surfaces, such as floors, where slips, trips, and falls are common occurrences. These occurrences, however, are not likely to result in major injuries or fatalities. On the other hand, there are many employees who work on ladders, scaffolds, towers, outdoor advertising signs, and similar surfaces where slips, trips, or falls are likely to result in serious injury or death.

The existing OSHA general industry standards recognize the use of guardrails and physical barriers as the primary methods for employee protection against falls. However, those standards do not directly recognize that personal fall protection systems can also provide effective means for employee protection. OSHA believes that the proposed rules will give employers the necessary flexibility to decide which fall protection method or system works best for the work operation being performed, while ensuring employees receive a level of protection that is effective and necessary. OSHA believes many of these slips, trips, and falls can be prevented and has devoted many years to assembling and analyzing information aimed at the elimination and prevention of hazards that cause these incidents. The Agency used that information to form the basis for this proposed rule.

History of the earlier rulemaking effort. OSHA's efforts to address slips, trips, and falls began with its initial standards. Those standards, which address a variety of walking-working surface hazards, were part of the initial package of standards promulgated by OSHA in 1971 under section 6(a) of the Occupational Safety and Health Act of 1970 (the Act) (29 U.S.C. 651 *et seq.*). Since that time, a number of interested parties suggested changes to the standard. In particular, the suggested changes addressed updating the existing standard to reflect the current national consensus standards.

Subpart D. Efforts to revise the initial standards in subpart D have been ongoing for many years. In September 1973, OSHA published a proposed revision of subpart D in the **Federal Register** (38 FR 24300).

In April 1976, OSHA withdrew the 1973 proposal (41 FR 17227) because it was outdated. In the same year, to obtain public input on revising subpart D, OSHA conducted several informal public meetings around the country. After reviewing the information gathered from the public, OSHA determined that a more thorough, scientific and technical research effort was needed to develop objective information upon which an effective revision to the subpart D standard could be based.

From 1976 through the 1980s, OSHA accumulated a wide variety of technical information. This included recommendations for fall prevention, ladders, scaffolds, slip-resistance, and handrails from the University of Michigan; studies concerning guardrails, slip-resistance, scaffolds, and fall prevention from the National Bureau of Standards (now the National Institute of Standards and Technology); analysis of various walking-working surfaces from Texas Tech University; accident and injury data from the Bureau of Labor Statistics; and various national consensus standards from the American National Standards Institute, American Society of Testing and Materials, and the American Society of Mechanical Engineers. This technical information provided the basis for a new proposal that was published in 1990; that proposal was not finalized due to other regulatory activities that took precedent.

Subpart I. Many of the Personal Protective Equipment (PPE) standards in subpart I, like subpart D, were also adopted by OSHA under section 6(a) of the Act. Existing subpart I contains general requirements for personal protective equipment, as well as specific performance and use requirements for certain types of personal protective equipment, including eye and face protection, respiratory protection, head protection, foot protection, protective clothing, hand protection, and electrical protective devices. Existing subpart I does not, however, contain any specific requirements addressing the performance or use of PPE used for *fall* protection; hence the need for this proposal.

OSHA first proposed to revise subpart I to address fall protection PPE in 1990 in combination with a proposal to revise subpart D. As noted above, the 1990 rule was not finalized. On April 6, 1994, OSHA updated other portions of the PPE standard (59 FR 16334) by adding new requirements for employers to conduct hazard assessments; to select the proper PPE; to remove defective or damaged PPE from service; and to provide training in the proper use, care, and disposal of PPE. Those provisions, however, only applied to PPE used for face and eye, head, foot, and hand protection. In this rulemaking, OSHA proposes to require the hazard assessments to address PPE used for fall protection as well.

The combined proposals for subparts D and I. On April 10, 1990, OSHA proposed to revise both subparts D and I (55 FR 13360 and 55 FR 13423, respectively). The proposals were intended to remove ambiguities and redundancies in the existing standards, simplify and consolidate existing provisions, and use performance language instead of specifications where possible. Additionally, OSHA proposed adding new requirements to subpart I, Personal Protective Equipment, to set performance and use criteria for fall protection equipment. The two subparts were interdependent with respect to personal fall protection systems; that is, the duty requirements for personal fall protection systems were in subpart D and the criteria for the systems were in subpart I. OSHA received comments and held a public hearing on the proposals.

On May 2, 2003, OSHA reopened the rulemaking record and republished the 1990 proposal (68 FR 23528) to refresh the record due to the length of time that had elapsed since 1990. Based upon comments and information received in that reopening, and because of technological advances, particularly within the fall protection industry, OSHA determined the best course of action was to issue a new proposal for subparts D and I.

Today's proposed rule. Today's proposed rule replaces the 1990 proposals (55 FR 13360). OSHA proposes to revise subpart D to accomplish the following:

(1) Reflect current industry practices and national consensus standards;

(2) Harmonize provisions, when possible, with other OSHA provisions (e.g., the construction standards in 29 CFR part 1926 and the Shipyard Employment Standards in 29 CFR part 1915); and

(3) Use performance-oriented language when possible, rather than specification-oriented language.

In subpart I, OSHA proposes to add new specific performance and use requirements for personal *fall* protection equipment. Existing subpart I contains general requirements for all types of personal protective equipment, as well as specific performance and use requirements for other types of personal protective equipment, but it does not specifically contain criteria for fall protection PPE.

To be effective, fall protection systems must be both strong enough to provide

the necessary fall protection and capable of absorbing fall impact so that the forces imposed on employees when stopping falls do not result in injury or death. The ability of the human body to tolerate the arresting force imposed on it by a fall protection system has been addressed directly in general industry only by § 1910.66, Powered Platforms for Building Maintenance. Throughout this proposed rule, OSHA will make reference to the general industry powered platform standard; the construction industry standard for fall protection; and the shipyard employment standards for personal fall protection systems. Experience gained by the Agency in enforcing those rules provides additional guidance in the development of this proposed rule. OSHA's objective is to make consistent all of its requirements for the use of personal fall protection systems. The listed fall protection standards contain requirements that are identical to, or essentially the same as, those proposed in this document.

The proposed rule for subpart I, to be codified at § 1910.140 (Fall protection), would apply whenever another standard requires or allows the use of fall protection PPE. In these situations, the system used must comply with the requirements of § 1910.140. For example, subparts D, F, and R of the general industry standards (part 1910) each contain a requirement (a duty) to use fall protection. Where an employer uses a *personal* fall protection system to meet the duty, that system would have to meet the criteria and performance requirements proposed in this rule. Many of the requirements proposed here for personal fall arrest systems are already in effect when employees are working on platforms regulated by OSHA's general industry standard in subpart F—Powered Platforms for Building Maintenance (§ 1910.66). Appendix C of § 1910.66 sets out mandatory requirements for personal fall arrest systems. Therefore, the entire powered platform rulemaking record is hereby incorporated into this proposed rulemaking (Dockets S–700 and S–700A).

In addition to proposing new requirements for personal protective equipment (PPE) used for fall protection, OSHA proposes to amend a number of general industry standards that already set a duty to use PPE by requiring that PPE meet the new requirements of subpart I. For example, paragraph (g) of § 1910.269 requires personal fall arrest systems to meet the requirements of subpart M of part 1926 (the construction industry requirements). This provision would be revised to require personal fall arrest systems to meet the mostly parallel criteria requirements of subpart I of 1910 (the general industry requirements). Subpart M of part 1926 differs from proposed subpart I in that subpart M addresses fall arrest systems used in the construction of elevator shafts, while subpart I does not address the construction of elevator shafts. In addition, subpart I uses performance language with regard to anchorages for fall arrest systems, while subpart M specifically prohibits the use of guardrails as anchorage points.

Finally, OSHA proposes to add two non-mandatory appendices to subpart I to provide examples of test methods and procedures that will assist employers and PPE manufacturers to demonstrate compliance with the criteria proposed in § 1910.140.

OSHA believes that many equipment manufacturers are currently following the criteria and test methods of the above-mentioned standards. Therefore, the vast majority of equipment covered by the proposed rule already complies with the requirements in this proposal. Also, OSHA notes that equipment that meets the proposed standards is readily available to any employer that does not already meet the proposed standard because personal fall protection systems required to be used by other OSHA standards (*e.g.,* the construction standards in 29 CFR part 1926 and the Shipyard Employment Standards in 29 CFR part 1915) must meet essentially the same criteria and testing requirements as in this proposed rule.

The OSH Act requires OSHA to make certain findings with respect to standards. One of these findings, specified by section 3(8) of the OSH Act, requires an OSHA standard to address a significant risk and to reduce this risk significantly. (*See Industrial Union Dep't* v. *American Petroleum Institute,* 448 U.S. 607 (1980).) As discussed in section II of this preamble, OSHA preliminarily finds that slips, trips, and falls constitute a significant risk, and estimates that the proposed standard will prevent 20 fatalities and 3,706 injuries annually. Section 6(b) of the OSH Act requires OSHA to determine if its standards are technologically and economically feasible. As discussed in section V of this preamble, OSHA preliminarily finds that this proposed standard is economically and technologically feasible.

The Regulatory Flexibility Act (5 U.S.C. 601, as amended) requires that OSHA determine whether a proposed standard will have a significant economic impact on a substantial number of small firms. As discussed in section VI, OSHA examined the small firms affected by this standard and certifies that the proposed standard will not have a significant impact on a substantial number of small firms.

Executive Order 12866 requires that OSHA estimate the benefits, costs, and net benefits of proposed standards. The table below summarizes OSHA's preliminary findings with respect to the estimated costs, benefits, and net benefits of this standard. As is clear, the annual benefits are significantly in excess of the annual costs. However, it should be noted that under the OSH Act, OSHA does not use the magnitude of net benefits as the decisionmaking criterion in determining what standards to promulgate.

NET BENEFITS AND COST EFFECTIVENESS OF THE PROPOSED REVISION TO OSHA'S WALKING-WORKING STANDARDS

	Annualized Costs
§ 1910.22 General Requirements	$15.7 million.
§ 1910.23 Ladders	$9.7 million.
§ 1910.24 Step Bolts and Manhole Steps	$3.7 million.
§ 1910.27 Scaffolds	$73.0 million.
§ 1910.28 Duty to Have Fall Protection	$0.09 million.
§ 1910.29 Fall Protection Systems Criteria and Practices	$8.4 million.
§ 1910.30 Training Requirements	$44.1 million.
§ 1910.140 Fall Protection	$18.5 million.
Total Annual Costs	$173.2 million.

NET BENEFITS AND COST EFFECTIVENESS OF THE PROPOSED REVISION TO OSHA'S WALKING-WORKING STANDARDS—Continued

Annual Benefits	
Number of Injuries Prevented	3,706.
Number of Fatalities Prevented	20.
Monetized Benefits (assuming $50,000 per injury and $7.2 million per fatality prevented)	$328.5 million.
OSHA standards that are updated and consistent with voluntary standards	Unquantified.
Net Benefits (benefits minus costs)	$155.4 million.

Cost Effectiveness: Compliance with the proposed standards would result in the prevention of 1 fatality and 231 injuries for every $10 million in costs, or alternatively, $1.90 in benefits per dollar of costs.

Source: U.S. Dept. of Labor, OSHA, Directorate of Evaluation and Analysis, Office of Regulatory Analysis, 2009.

II. Analysis of Risk

Nature of the risk. Falls and other hazards associated with walking-working surfaces, primarily resulting in slips, trips, and falls, and hazards leading to combustible dust explosions and other accidents, are addressed in this proposal. These hazards are encountered by millions of employees working in industry sectors regulated by OSHA under 29 CFR part 1910. There are many causal factors for slips, trips, and falls, such as ice, wet areas, grease, loose flooring or carpeting, inattention to surroundings, uneven scaffolding planking, clutter, worn rope on descent systems, open desk drawers and filing cabinets, damaged ladder steps, and a more subtle cause—a belief that the action being taken will not lead to an accident. For example, where a ladder is not readily available, employees may improvise and use a chair, or even a 5-gallon bucket, as a way to reach a higher level. In fact, accident data show that many falls could be prevented if existing OSHA regulations and recommended safe practices were followed. The hazards generally can be grouped into three (often interrelated) factors: Equipment, human, and environmental. Examples of some equipment factors include improper footwear, uneven surfaces, foreign substances on surfaces such as oil or litter, and unguarded sides and edges of elevated platforms. Some human factors are inattention, haste, human error, failure to follow instructions, and fatigue. Environmental factors may include poor lighting and weather-related conditions. The presence of multiple factors increases the risk. For instance, a polished marble floor may not present a slipping hazard to someone wearing rubber-soled shoes; however, when the floor is wet from mopping or snow being tracked in from the outdoors, the risk of slipping greatly increases. The addition of other factors such as poor lighting, inattention, and haste are likely to further increase the risk.

Slips and trips can lead to falls that cause injuries such as back strains or other injuries when individuals try to "catch" themselves. Falls on the same level can cause injuries such as sprains, strains, fractures, and contusions that may affect any area of the body and, on occasion, can be fatal. Falling from an elevated surface increases injury severity and the likelihood of fatalities. Falls from elevations occur in all industries, in all occupations, and in a myriad of work settings—from the employee washing windows from a rope descent system 40 feet from the ground, to the stock clerk retrieving goods from a shelf using a 4-foot stepladder. These tasks represent only two of the numerous tasks that can result in injury or death to employees caused by failures to recognize fall hazards, to use fall protection equipment, or to take appropriate action to abate fall hazards.

Identifying fall hazards and deciding how best to protect employees is the first step in reducing or eliminating the hazards. Therefore, OSHA is proposing to expand existing § 1910.132(d), Hazard assessment and equipment selection, to apply to hazards covered in new § 1910.140—Fall protection. This expansion would require employers to assess the workplace to identify fall hazards and select and require the use of appropriate PPE. In addition, the employer must train (*see* § 1910.132(f)) the employee on the proper use of PPE. Once employers determine that the use of PPE is the most appropriate way to protect their employees from falls, the proposed rule requires employers to provide equipment that meets certain strength and performance requirements.

Injury and fatality data. Recent employment data taken from the U.S. Census Bureau's 2007 Statistics of U.S. Businesses and the Bureau of Labor Statistics' (BLS) Occupational Employment Statistics indicate that over 106 million employees work in over 6 million establishments regulated by OSHA under its subpart D standards. Slips, trips, and falls constitute 15 percent of all accidental deaths, and are second only to motor vehicles as a cause of employee fatalities.

The BLS Census of Fatal Occupational Injuries (CFOI) has listed falls as one of the leading causes of traumatic injury and death in the workplace for many years. Fall-related injury and fatality statistics show that employees encounter hazards associated with walking-working surfaces at their worksites on a daily basis.

Tables V–10 and V–11 of section V ("Preliminary Economic and Initial Regulatory Flexibility Screening Analysis") depict BLS data from 1992 to 2004. During this time period, BLS reported an annual average of 300 fatal falls, 213 (71%) of which resulted from falling from a higher level. Furthermore, of an annual average of 299,404 non-fatal falls resulting in lost-workday injuries, 79,593 (26%) were as a result of falling from a higher level.

An examination of more recent BLS data, shows that falls continue to be a significant source of workplace fatalities.

FATAL FALLS

	Fatal falls	Fatal falls from height	Percentage of fatal falls that were falls from height
1992–2004 (Average per Year)	300	213	71
2005	320	257	80
2006	343	285	83
2007	357	267	75

According to this table, the number of falls resulting in death is increasing, although the percentage of fatal falls that are due to falls from heights dropped in 2007.

Significance of risk. As described more fully in section V of this preamble, many of the falls that occur in general industry could be prevented through the maintenance of safe conditions and the use of safe work practices on walking-working surfaces, as well as through the proper use of appropriate personal fall protection equipment when necessary. The Agency estimates that compliance with the proposed requirements in subparts D and I would prevent 20 fall-related fatalities and 3,706 fall related lost-workday injuries annually (*see* section V of this notice).

The Agency has concluded, on a preliminary basis, that these proposed standards address a significant risk. Furthermore, OSHA believes that compliance with these proposed requirements is reasonably necessary to protect employees from fall hazards and would substantially reduce this risk.

Basis for Agency action. In the 1990 proposed rule (55 FR 13361), OSHA described a number of studies and investigations conducted by both government agencies (OSHA, Consumer Product Safety Commission, the Bureau of Labor Statistics, and the former National Bureau of Standards, now called the National Institute for Standards and Technology) and academia (University of Michigan, Texas A&M, and the University of Texas). These studies, which are available in the earlier rulemaking docket (S–029) or from the sources listed in Appendix C of the 1990 proposed rule, provide useful information about the ways in which employees fall from various surfaces, and the forces applied when stepping on surfaces, particularly ladders and stairways. Additionally, they provide information about the strength necessary for various surfaces, the minimum and maximum spacing between rungs on ladders and steps on stairways, and other similar details. They also address the need for toe and hand clearances, the height of stair rail and guardrail systems, and the size of openings in guardrails that would permit passage of employees. Many of the recommendations contained in referenced reports and studies are validated by inclusion of identical or essentially similar requirements in the national consensus standards applicable to the topic.

There are various ways of protecting employees from the hazards associated with walking-working surfaces. This proposal, in conjunction with the criteria for personal fall protection systems in the subpart I proposed rule, addresses conventional fall protection systems such as guardrail systems, safety net systems, and personal fall protection systems (travel restraint systems, fall arrest systems, and positioning systems). The proposal also includes non-conventional means such as allowing employees to work in a designated area (without conventional fall protection), provided they receive specific training and use safe work practices.

OSHA intends to ensure that all PPE requirements for fall protection in general industry are the same, and therefore is proposing to replace existing requirements in other general industry standards with references to subpart I, Personal Fall Protection Systems. This change will facilitate compliance, since all general industry fall protection criteria will be consolidated into subpart I.

Additionally, the rule requires employers to take easy-to-use measures, such as placing covers over holes in floors and using indicators or signs to warn employees that they are approaching a fall hazard.

The proposed standard would also require employers to ensure that walking-working surfaces are designed, constructed, maintained, and used in a safe manner, and that proper work practices are used by the employees. For example, when climbing a ladder, the employee must always maintain three points of contact and never use the top of a stepladder as a step. Many of the design requirements in the proposed standard (such as those for step bolts, mobile ladder stands, and portable ladders) reflect the manufacturing specifications prescribed by national consensus standards. In most instances, the Agency used the most recent version of consensus standards in writing this proposal.[1]

OSHA proposes the requirements in subparts D and I as the minimum necessary to protect employees from significant hazards that can cause falls and other events which may result in serious injury and death. OSHA believes that many employers are already in compliance with the updated proposed rules because the majority of the proposed requirements are either already in existing OSHA rules or are prescribed by national consensus standards organizations in voluntary standards on the topic. The Agency believes that codifying more current consensus standard provisions, establishing personal fall protection systems criteria in subpart I, and specifying training requirements will lead to higher compliance with standards. The updated rules will make it easier and more effective to prevent slips, trips, and falls and other events.

A safety or health standard is a standard "which requires conditions, or the adoption or use of one or more practices, means, methods, operations, or processes, reasonably necessary or appropriate to provide safe or healthful employment" (29 U.S.C. 652(8)). In addition, all standards must be highly protective (*see* 58 FR at 16614–16615; *International Union, UAW* v. *OSHA,* 37 F.3d 669 (DC Cir. 1994)) and, whenever practical, standards shall "be expressed in terms of objective criteria and of the performance desired." *Id.* In this preamble, OSHA discusses the hazards associated with walking and working on elevated, slippery, or other surfaces, and explains why the provisions of the proposed rule are reasonably necessary to protect affected employees from those risks. The Agency estimates that compliance with the revised walking-

[1] Consensus standards are updated on a cyclical basis, thus staying current with industry practice and technological advances.

working surfaces standard will reduce the risks associated with these hazards by preventing an estimated 20 fatalities annually based upon the 1992–2007 BLS data and 1995–2001 OSHA data. OSHA believes that this constitutes a substantial reduction in the risk of material harm. Since falls from heights result in more fatalities and more serious injuries than falls on the same level, this proposed rule places emphasis on falls from heights.

III. Issues

Issue #1—Fall Protection on Rolling Stock and Motor Vehicles

OSHA is requesting additional comment on whether specific regulations are needed to cover falls from rolling stock and commercial motor vehicles. Existing subpart D does not specifically address or exclude fall protection on rolling stock or motor vehicles from coverage. For the purposes of this issue, the term "rolling stock" means any locomotive, railcar, or vehicle operated exclusively on a rail or rails, or a trolley bus operated by electric power supplied from an overhead wire. The term "motor vehicle" means commercial buses, vans, and trucks (including tractor trailer trucks, tank trucks, and hopper trucks). For the purposes of this rule, the term "motor vehicle" does not include powered industrial trucks. OSHA is specifically seeking comment on whether it should include requirements specifying that when employees are exposed to falls from rolling stock and motor vehicles at heights greater than 4 feet, protective work practices, methods, or systems must be instituted. OSHA is also requesting comment on how it should define "rolling stock" and "motor vehicles," or if the terms as defined are sufficiently inclusive.

The 1990 "Notice of Proposed Rulemaking for Walking-Working Surfaces" (68 FR 23530) generated one comment on the subject. The American Feed Industry Association said:

> The section on Scope and Applications provides that this Subpart D does not apply to "surfaces that are an integral part of self-propelled, motorized mobile equipment". [§ 1910.21.] This is, obviously and correctly, meant to exclude work surfaces that are on railroad cars, truck trailers, and barges.
>
> OSHA should add a line to section 1910.21(a)(1) that says: Railroad cars, truck trailers, barges and similar equipment designed for use with a separable source of propulsion are excluded from coverage by this subpart even when temporarily detached from any source of propulsion for purposes of loading or unloading.

In 1996, OSHA was asked to clarify its fall protection rules involving the unloading of grain from rolling stock (meaning rail cars). In response, OSHA issued a memorandum to its Regional Administrators on October 18, 1996 (Ex. OSHA–S029–2006–0662–0018), directing OSHA inspectors not to cite rolling stock under subpart D. The memorandum also said that it would not be appropriate to use the PPE standard (29 CFR 1910.132(d)) to cite employee exposure to fall hazards on the tops of rolling stock unless the rolling stock was positioned inside of or contiguous to a building or other structure where the installation of fall protection is feasible. The memorandum did not result in clear direction to the public or to OSHA's field staff. As a result, OSHA raised the issue of fall protection on rolling stock and motor vehicles in a separate **Federal Register** notice—the 2003 Reopening Notice. In response to that notice, OSHA received a number of comments that supported and opposed the inclusion of specific requirements regulating fall hazards from rolling stock and motor vehicles.

Commenters expressed diverse views on the approach that OSHA should pursue to regulate falls from rolling stock and motor vehicles. Some commenters supported an exclusion of rolling stock and motor vehicles from subpart D while other commenters supported the inclusion of new, specific rules. Referring to advances in fall protection technology, some of these commenters said they believed that it would be feasible to protect employees from falls, and cited the type of equipment that could be used to provide that protection. Other commenters simply stated their support for the policy OSHA set forth in the 1996 memorandum. However, the understanding of the 1996 memorandum also varied among commenters. Commenters provided little information to the record regarding injuries and deaths associated with falls from rolling stock and motor vehicles.

OSHA plans to continue gathering information and evidence to determine whether there is a need to propose *specific* requirements for the protection of employees exposed to falls from rolling stock and motor vehicles. Additionally, OSHA needs more information about what employers are presently doing and any feasibility and cost concerns associated with a requirement to provide protection. Therefore, OSHA is not including any *specific* requirements pertinent to rolling stock and motor vehicles in proposed § 1910.28. Rather, it will wait until the record is more fully developed to determine the appropriate course of action. If, in response to this issue, the Agency receives sufficient comments and evidence to warrant additional rulemaking, a *separate* proposed rule will be issued.

In an effort to collect and assemble the information needed for OSHA to make an informed decision about the need for specific provisions regulating fall hazards from rolling stock and motor vehicles, the Agency requests comprehensive responses to the questions posed below. The Agency requests that the responses be directed specifically to individual questions and be clearly labeled with the number of the question.

With respect to rolling stock, OSHA is not soliciting information relating to personal fall protection equipment used on rolling stock involved in "railroad operations," which include the movement of equipment over rails. The Federal Railroad Administration's (FRA) "Railroad Occupational Safety and Health Standards Policy Statement" (the Policy Statement) sets out the respective areas of jurisdiction between FRA and OSHA. That Policy Statement provides that FRA has jurisdiction over railroad operations, including personal protective equipment and walking-working surfaces on rolling stock. With regard to FRA's jurisdiction over personal protective equipment, the FRA Policy Statement notes, "OSHA regulations concerning personal protective equipment apply according to their terms, except to the extent the general requirements might be read to require protective equipment responsive to hazards growing out of railroad operations." (*See* 43 FR 10583, 10588 (1978).) Addressing FRA's jurisdiction over walking-working surfaces, the FRA Policy Statement reads, "[OSHA regulations] would not apply with respect to the design of locomotives and other rolling equipment used on a railroad, since working conditions related to such surfaces are regulated by FRA as major aspects of railroad operations." (*Id.* at 10587.) A copy of the FRA's Policy Statement can be found on FRA's Web site. OSHA is, however, requesting comment and information regarding rolling stock not involved in railroad operations, such as, but not limited to, when rolling stock is being loaded or unloaded off railroad property by non-railroad employees or contractors to railroads, or when such rolling stock is being retrofitted or repaired off railroad property.

In regard to rolling stock:

1. In your establishment and/or industry, how many or what percentage of employees working on top of rolling stock are exposed to fall hazards?

2. How are these employees protected from fall hazards while working on such equipment?

3. If employee training on the recognition of fall hazards is provided in your workplace, please describe the nature and frequency of the training.

4. If fall protection equipment is used, please provide detailed information on the types and costs of the fall protection used on rolling stock and please explain how it is used.

5. If fall protection equipment is not used, please explain what technological and/or economic obstacles to such use may be involved.

6. Are there alternative means to protect employees from fall hazards while working on rolling stock? Please explain.

7. What is your safety experience with fall hazards on or from rolling stock?

8. Should OSHA exclude rolling stock from coverage under subpart D? Please explain and provide data and information to support your comments.

In regard to motor vehicles:

9. In your establishment and/or industry, how many or what percentage of employees working on top of motor vehicles are exposed to fall hazards?

10. How are these employees protected from fall hazards while working on such equipment?

11. If employee training on the recognition of fall hazards is provided in your workplace, please describe the nature and frequency of the training.

12. If fall protection equipment is used, please provide detailed information on the types and costs of the fall protection used on motor vehicles and please explain how it is used.

13. If fall protection equipment is not used, please explain what technological and/or economic obstacles may be involved.

14. Are there alternative means to protect employees from fall hazards while working on motor vehicles? Please explain.

15. What is your safety experience with fall hazards on or from motor vehicles?

16. Should OSHA exclude motor vehicles from coverage under subpart D? Please explain and provide data and information to support your comments.

Issue #2—Fall Protection for Employees Standing or Climbing on Stacked Materials (e.g., Steel and Precast Concrete Products)

OSHA is seeking comment on whether there is a need to promulgate a specific requirement in subpart D to address those situations where an employer can demonstrate that it is infeasible or creates a greater hazard to use conventional fall protection to protect employees exposed to falling 4 feet (1.2 m) or more from stacked materials. Some commenters have recommended that OSHA allow the use of safe work practices by trained employees in lieu of conventional fall protection for certain activities. OSHA seeks comment on the current fall protection measures that are in use, and the degree to which conventional fall protection is infeasible or creates a greater hazard.

This issue was brought to OSHA's attention by the Precast Concrete Institute (PCI) and the American Iron and Steel Institute (AISI). OSHA notes that neither the existing nor the proposed revision to subpart D contains a *specific* requirement addressing fall protection for employees who must climb onto and stand on stacked materials (e.g., stacks of steel or concrete products) to perform their work—for example, rigging materials in preparation for transport. Rather, OSHA has enforced the general fall protection rules of subpart D (§ 1910.23) and subpart I (§ 1910.132), as well as the general duty clause (5)(a)(1) of the OSH Act, to protect workers. OSHA has considered the comments of both PCI and AISI and has conducted an information-gathering site visit to become more familiar with the specific concerns raised by the commenters. At this point, OSHA is unconvinced that its existing enforcement policy, which makes allowances for situations where a greater hazard exists or where it is infeasible to provide fall protection, does not adequately address the concerns of the commenters. Nonetheless, OSHA is considering adding a specific requirement to subpart D if sufficient information and support is received to demonstrate the need for such a specific requirement. Additionally, OSHA requests comment on whether there are other similar situations where employees work on stacked materials.

For background, the PCI, in correspondence to OSHA from 2000 to 2003, outlined its concerns regarding the feasibility of providing fall protection for employees working at precast concrete manufacturing plants who are working/walking on precast concrete products. Additionally, PCI expressed concern about the feasibility of providing fall protection for employees who are rigging precast products, placing them on trailers, and securing them for transport to construction sites. Specifically, in a letter dated January 3, 2000 (Ex. 1), PCI asked for an "interpretation and exception for riggers loading/unloading precast concrete products on trucks * * * and for riggers stacking, storing, loading or unloading precast concrete products in the plant, relative to fall protection. * * *" PCI provided the following rationale:

> When stacking, storing, loading or unloading precast concrete products, the need for employees to access the top of concrete products in excess of four (4) feet, for very short periods [of] time, to connect or disconnect lifting devices or rigging is necessary. The use of a conventional fall protection system is a greater hazard and in most cases infeasible because, while installing a fall protection system, employees are exposed to a fall hazard for an extended period of time. Since conventional fall protection is infeasible, employees shall be given individual instruction as well as have a mentor system hands-on process for training.

PCI also noted that OSHA does not require fall protection for employees off-loading the precast concrete products at construction sites because the definition of a walking-working surface in the construction rule excluded "vehicles or trailers on which employees must be located to perform their job duties." PCI included the following recommended work procedure:

> A ladder shall be used to climb onto or off the vehicle deck and product. Employees shall not jump off [the] trailer or from product to product. Corrective and detail work shall be completed at ground level or from a ladder or mobile elevating work platform.

On May 20, 2004, the American Iron and Steel Institute (AISI) raised the same concern in its response to a request for comments from the Office of Management and Budget (67 FR 15014) on the "Draft Report to Congress on the Costs and Benefits of Federal Regulations." (Ex. 2) The AISI identified OSHA's subpart D as needing revision to permit employees standing on stacks of steel to work without fall protection when fall protection is not practical. Specifically, AISI said the following:

> OSHA requires employers to provide either guardrails or tie-off protection to workers who must perform their duties 48 inches or greater above the ground (1910.23 and 1910.66). These requirements are infeasible for operations that exist in steel and steel products companies where individuals need to stand on "stacks" of product that have a large surface area in order to rig bundles for crane lifts and similar activities. These rules also affect the loading of product onto truck trailers and railcars that are, with rare exception, over 48 inches above the ground. OSHA's list of "solutions" are to build guardrails around the product stacks, use magnet cranes, or provide safety lines around trailers and railcars, but these solutions are not feasible. Use of fixed guardrails around

truck trailers and railcars is not feasible and would, additionally, create its own serious safety hazard. The use of magnet cranes that do not require a rigger is also infeasible because magnet [sic] cannot connect to only a single bundle. Providing safety lines around the stacks, trailers and railcars is infeasible because customer orders necessitate bundles to be in varied stack heights, based on quantity ordered. Finally, because product placement for shipment requires traversing the trailers and railcars, it would require product to move through required safety lines. These rules should provide employers with some flexibility by stating that activities that are over 48 inches above the ground should use either guardrails or tie-off protection, "where practical." In situations where their use is not practical, the employer should be permitted to use an alternative practice and to provide appropriate training to the employee.

OSHA requests comment on PCI's recommended procedures and AISI's position. The Agency also refers readers to Issue #1 above which also pertains to providing fall protection for employees on vehicles and railcars.

Issue #3—Qualified Climber

In the 1990 proposal (55 FR 13366), OSHA first introduced the concept of a "qualified climber." A qualified climber was defined as "an employee who, by virtue of physical capabilities, training, work experience, and job assignment is authorized by the employer to routinely climb fixed ladders, step bolts or similar climbing devices attached to structures." OSHA proposed that rather than always providing conventional fall protection (cages, wells, ladder safety systems, or other fall protection) to employees climbing fixed ladders over 24 feet (7.3 m), the employer could allow qualified climbers to climb without fall protection provided certain criteria were met.

On March 1, 1991, OSHA granted a variance to Gannett Outdoor Companies (56 FR 8801) permitting it to use qualified climbers as defined in the 1990 NPRM for outdoor advertising (billboard) applications. On January 26, 1993, OSHA issued a compliance directive applying these conditions to all outdoor-billboard applications.

The criteria included that the ladder be climbed two or fewer times per year and that installing a ladder safety system, cage, or well would create a greater hazard. The premise of the proposal was that many fixed ladders in use at the time were not equipped with cages or wells as required by the existing standard. In addition, installing them would be extremely costly and the installation process itself might pose a greater hazard to workers than simply climbing the ladder without fall protection. Newer, anecdotal information available to OSHA indicates just the opposite—that most fixed ladders over 24 feet (7.3 m) in height are already equipped with a well, cage, or some other type of fall protection (ladder safety system or personal fall protection system). OSHA notes that newer fall protection systems have emerged that can be installed in one climb of a fixed ladder. Some ladders are even manufactured with a ladder safety system already installed as an integral part of the ladder. For these reasons OSHA is not proposing the use of qualified climbers in this rule, except in the outdoor advertising (billboard) industry. Permitting the exception for billboard applications would codify the aforementioned 1993 variance. However, considering the advances in fall protection since publication of the 1990 proposed rule, OSHA requests comment on the need for the qualified-climber provision for the outdoor advertising industry. Removing this proposed provision would result in requiring fall protection for this industry that is the same as on all other fixed ladders covered by subpart D; therefore, commenters are requested to also address the technological and economic feasibility of removing this proposed provision. Commenters should provide supporting rationale for all responses.

OSHA is not proposing to impose a duty to provide fall protection where an existing subpart D standard already requires the use of fall protection equipment. Thus, the proposed rule would not apply to electric power generation, transmission, or distribution work covered by § 1910.269(g)(2)(v), or to telecommunications work covered by § 1910.268(n)(7) or (n)(8). These two industry-specific standards generally permit employees to free climb to work locations on poles, towers, and similar structures without the use of fall protection equipment. These standards protect employees by requiring adequate training in climbing (§§ 1910.268(c) and 1910.269(a)(2)(i)) and, in the case of the electric power generation standard in § 1910.269, by ensuring that employees are proficient in safe climbing techniques (§ 1910.269(a)(2)(vii)). OSHA invites comment on whether §§ 1910.268(n)(7) and (n)(8) and 1910.269(g)(2)(v), which generally require fall protection only after the employee reaches the working position, adequately protect employees. In addition, the Agency requests information on the technological feasibility of requiring fall protection for employees climbing and changing position on electric power and telecommunications poles and structures, and the costs and benefits of complying with such a requirement.

Issue #4—Building Anchorages for Rope Descent Systems

Section 1910.27(b) of the proposal addresses rope descent systems and includes a provision (in proposed § 1910.27(b)(2)(iv)) requiring "sound" anchorages. OSHA believes that sound anchorage points are necessary to ensure that rope descent systems can be safely attached to the building for any type of suspended work, not just window cleaning. The ideal solution is for anchorages to be installed and maintained as part of the regular schedule for renovating and inspecting commercial buildings.

Existing subpart D does not address the installation and maintenance of anchorages on buildings or other structures. Under the proposed rule, separate anchorages are required for personal fall arrest systems and for rope descent systems. The requirements for anchorages for personal fall arrest systems are contained in proposed subpart I, § 1910.140. However, no specific requirements for anchorages used with rope descent systems are included in this subpart D proposal, other than to specify that they be "sound."

OSHA raised this issue in the 1990 proposal (55 FR 29224, 29227–28, July 18, 1990) and again in the 2003 Reopening Notice (68 FR 23534). In those documents, OSHA requested comment on whether it should add an installation and maintenance provision to subpart D for "all structures where it is reasonably foreseeable that employees will need anchorage points" to attach rope descent systems and other equipment. OSHA raised the issue after the International Window Cleaning Association (IWCA) and small window cleaning companies told OSHA that quite often there were no anchorage points on rooftops for attaching their lines. Since they did not own the building, they had no control over the presence or location of anchorage points. They urged OSHA to require building owners to install anchorages on rooftops or designate existing structural members that would be strong enough to serve as anchor points to attach scaffolds, control descent devices, and safety lines (Ex. OSHA–S041–2006–0666–0543; Ex. OSHA–S041–2006–0666–1252, pp. 311, 313, 330–31; Ex. OSHA–S041–2006–0666–1253, pp. 483–84, 503, 543–44, 565–66, 596–97, 629–30).

OSHA also noted that the Building Owners and Managers Association International (BOMA) objected to

requiring building owners to provide anchor points, stating that window cleaners were generally able to find supports on which to tie off (Ex. OSHA–S041–2006–0666–1255, p. 1443), but agreed that new buildings completed two to five years after the effective date of the final rule should be equipped with anchor points (Ex. OSHA–S041–2006–0666–1212).

The ANSI standard for Window Cleaning Safety, ANSI I–14.1–2001 (Ex. OSHA–S029–2006–0662–0014), in section 3.9 prescribes criteria for anchorages used for rope descent systems and independent life lines, specifying, "Building owners and window cleaning contractors shall not allow suspended work to be performed unless it has been determined that the building has provided, identified and certified anchorages * * *." OSHA notes that IWCA and BOMA participated on the ANSI committee that developed the national consensus standard addressing safety in window cleaning operations. According to the ANSI standard, anchorages must be capable of sustaining a 5,000 pound (2268 kg) load, or a minimum 4-to-1 safety factor, whichever is greater, in any direction that the load may be applied, among other requirements. It should be noted that ANSI/IWCA I–14.1 contained a recommendation in Appendix A that the requirements be implemented within 5 years of its publication on October 25, 2001. OSHA requests comment on whether it should include the language of the ANSI/IWCA standard in the final rule or should it require some other criteria for building anchorages?

For example, under § 1910.66, Powered platforms for building maintenance, OSHA requires building owners to provide an employer with a certification of inspection, testing, and maintenance of anchorages for powered platforms used in building maintenance. OSHA requests comments on whether it should require building owners to provide employers with the same information required by § 1910.66.

OSHA is aware that some window cleaning companies are using the powered platform certified anchorages for rope descent systems. If OSHA were to adopt the same requirement, those building's owners would have no additional obligation to comply with the language under consideration.

OSHA believes that many building owners already meet the § 1910.66 requirements or the provisions of ANSI/IWCA I–14.1. For instance, it is the Agency's understanding that the General Services Administration (GSA) updated its policy to require building anchors to be installed during construction or extensive remodeling of government buildings.

Issue #5—Technological Advances in Fall Protection and Fall Arrest

The Agency is aware of a newer dual-mode operation self-retracting lanyard that, in the event of a fall, arrests the fall and then automatically lowers the worker at a controlled, slow rate of speed to the ground or to the next lower level. These devices show promise, for example, in rescuing some workers following a fall. OSHA requests comment regarding the current use and effectiveness of these devices, appropriate and inappropriate conditions of use, as well as relevant costs and benefits.

In addition, OSHA requests information on other new fall protection and fall arrest equipment that is not mentioned in this proposal. Please include a detailed explanation of the equipment, sources of supply, costs and benefits, applications, and conditions of use.

IV. Summary and Explanation of the Proposed Rule

A. Format of Proposed Changes to Subparts D and I

OSHA's proposed revisions to subpart D include a reorganization of the existing rule to make the rule clearer, necessitating reformatting the entire subpart. OSHA's proposed format changes are set forth in the following redesignation table:

REDESIGNATION TABLE

Existing	Proposed rule
§ 1910.21 Definitions.	§ 1910.21 Scope, application, and definitions.
§ 1910.22 General requirements.	§ 1910.22 General requirements.
§ 1910.23 Guarding floor and wall openings and holes.	§ 1910.23 Ladders.
§ 1910.24 Fixed industrial stairs.	§ 1910.24 Step bolts and manhole steps.
§ 1910.25 Portable wood ladders.	§ 1910.25 Stairways.
§ 1910.26 Portable metal ladders.	§ 1910.26 Dockboards (bridge plates).
§ 1910.27 Fixed ladders.	§ 1910.27 Scaffolds (including rope descent systems).
§ 1910.28 Safety requirements for scaffolding.	§ 1910.28 Duty to have fall protection.
§ 1910.29 Manually propelled mobile ladder stands and scaffolds (towers).	§ 1910.29 Fall protection systems criteria and practices.
§ 1910.30 Other working surfaces.	§ 1910.30 Training requirements.

The Agency seeks comment regarding this reorganization of subpart D, and rationale, to support any suggested modification(s). OSHA's proposed revisions to subpart I includes the addition of a new § 1910.140 and appendices C and D.

B. Proposed Changes to Subpart D

As mentioned earlier in the Summary statement of this notice, OSHA is publishing proposed rules for subpart D, Walking-Working Surfaces and subpart I, Personal Protective Equipment for Fall Protection concurrently. Proposed subpart D establishes requirements for general industry walking-working surfaces and prescribes the use of fall protection systems (including *personal* fall protection systems) to protect employees from falls. Proposed subpart I contains performance criteria for *personal* fall protection systems only. OSHA notes that wherever subpart D makes specific reference to the requirements in subpart I, the reference is to the pertinent provisions in the proposed rule of subpart I (which accompanies this proposed rule), and not to the existing subpart I requirements, unless specifically stated.

The following discussion explains the purpose of the proposed rule, and explains the differences between the proposed rule and existing standards. The rulemaking history is quite lengthy; to date two proposals have been issued, one in 1973 and one in 1990. Since the earlier proposals, technology has advanced greatly and many of the requirements proposed by OSHA in the two earlier rulemakings are no longer

appropriate. Similarly, OSHA believes that many of the comments received on those proposals are no longer relevant. Therefore, OSHA will only discuss comments from the 1990 proposal that are pertinent to today's proposal. However, all the comments are available for review in Docket No. S–041, located in the OSHA Docket Office.

References in parentheses are to exhibits in the current rulemaking record and are available in the OSHA Docket Office under Docket No. OSHA–2007–0072. Where references are made to the earlier proposal (1990), and the reopening of that record (2003), both the exhibit and docket number will be noted.

Throughout this proposal, where possible, performance-oriented language is used. Any employer who experiences difficulty applying these performance-oriented standards may consult the applicable national consensus standards for additional information.

Section 1910.21 Scope, Application, and Definitions

Paragraph (a) Scope and Application

Proposed § 1910.21 sets the scope and application for subpart D and also lists and defines the major terms used. Existing subpart D does not contain a scope and application section for the entire subpart, but it does contain several separate "application" requirements in various sections of subpart D. For example, each of the following existing sections contains "application" statements: the introductory text to § 1910.22 General requirements; paragraph (a) of § 1910.24 Fixed industrial stairs; paragraph (a) of § 1910.25 Portable wood ladders; paragraph (e)(3) of § 1910.27, Fixed ladders; and paragraph (a)(1) to § 1910.29 Manually propelled mobile ladder stands and scaffolds (towers). None of the other sections in existing subpart D address the scope or application.

Proposed paragraph (a) provides to the public a clear understanding of the rule and is consistent with the Agency's interpretation and enforcement of subpart D since its inception. That is, as a whole, existing subpart D applies to all general industry workplaces. However, as proposed, there are some sections within subpart D that do not apply to certain operations or activities. These exceptions are addressed in individual sections of this subpart.

An exclusion contained in a specific section applies to that section only; all other sections in subpart D do apply. For example, if an employee is working on a ladder on an entertainment stage, the applicable requirements of proposed § 1910.23, Ladders, apply, as would § 1910.22, General requirements, even though § 1910.28, Duty to have fall protection, does not apply to exposed perimeters of entertainment stages.

Paragraph (b) Definitions

Proposed paragraph (b) of § 1910.21 lists and defines all major terms used in the proposed standard. The existing rule defines 125 terms and, in some cases, the same term is defined differently several times due to the context in which it is used. For example, in existing § 1910.21(a)(4) the term "platform" is defined as "A working space for persons, elevated above the surrounding floor or ground; such as a balcony or platform for the operation of machinery and equipment." In existing § 1910.21(b)(4), "platform" is defined as "an extended step or landing breaking a continuous run of stairs."

Another example of the same term being defined differently in the existing rule is the term "handrail." In existing § 1910.21(a)(3), the term is defined as "A single bar or pipe supported on brackets from a wall or partition, as on a stairway or ramp, to furnish persons with a handhold in case of tripping," whereas § 1910.21(b)(1) and (g)(8) define "handrail" as "a rail connected to a ladder stand running parallel to the slope and/or top step."

Likewise, the term "toeboard" is defined in § 1910.21(a)(9) as "a vertical barrier at floor level erected along exposed edges of a floor opening, wall opening, platform, runway, or ramp to prevent falls of materials," whereas in § 1910.21(g)(16) the term is defined as "a barrier at platform level erected along the exposed sides and ends of a scaffold platform to prevent falls of materials."

In today's proposal, all major terms are listed and defined in paragraph (b), and the term will have the same meaning in all sections of proposed subpart D. Many of the definitions are the same as those in the existing standard, although some have been reworded for uniformity or clarity.

OSHA seeks to improve subpart D by making it easier to understand, as well as consistent with other Agency rules regulating the same topics. To that end, where terms used in subpart D have been defined in other general industry, construction, or maritime standards, the Agency has, where possible, used the same definition. OSHA believes such consistency will lead to a better understanding of the rules, and to greater compliance, resulting in increased employee safety. The following terms are defined in the proposed rule: alternating tread-type stair; authorized; cage; carrier; combination ladder; designated area; dockboard (bridge plate); equivalent; extension ladder; failure; fall hazard; fall protection; fixed ladder; grab bars; guardrail system; handrail; hoist area; hole; individual rung ladder; ladder; ladder safety system; lower level; manhole steps; maximum intended load (designed working load); mobile; mobile ladder stand (ladder stand); mobile ladder stand platform; open riser; opening; platform; portable ladder; qualified; qualified climber; ramp; riser; rope descent system; rung, step, or cleat; runway; safety factor; scaffold; ship stairs (ship ladders); side-step ladder; single-point adjustable suspension scaffold; spiral stairway; stair rail system; standard stairs; stepladder; step-bolt (pole step); stepstool; through ladder; tieback; toeboard; tread; unprotected sides and edges; walking-working surface; and well.

Some terms defined in the existing standard are not defined in the proposal because they are: (1) not used in the proposal, or (2) do not need to be defined because their meaning is clear without further explanation. An example of a term that does not need definition is the term "working level." This term does not need to be defined because it is obvious that the level at which the employee is working is the working level.

Many of the existing terms and definitions pertain to scaffolds. Because OSHA is proposing that scaffolds used in general industry comply with the construction industry scaffold requirements of subpart L of part 1926 (§§ 1926.450 through 1926.454), there is no need to define scaffold terms in this general industry proposal. For example, the term "check" refers to the lengthwise separation of wood in scaffold planking. Because subpart D is referring to § 1926 for scaffolding requirements, there is no need for this definition in § 1910.21(b).

Although many definitions remain unchanged, the following proposed terms have been added or revised from the existing definitions:

Alternating tread-type stair. This term means a series of treads usually attached to a center support in an alternating manner so that a user of the stair normally does not have both feet on the same level at any time whether ascending, descending, or standing. The proposed definition is consistent with ANSI A1264.1–1995(R2002), Safety Requirements for Workplace Floor and Wall Openings, Stairs and Railing Systems.

Authorized. This term describes an employee who is approved or assigned by the employer to perform a specific

type of duty or an employee who is permitted by the employer to be at a specific location.

Cage. This term means a barrier mounted on the side rails of a fixed ladder or fastened to the structure behind the fixed ladder designed to encircle the climbing space of the ladder to safeguard the employee while climbing the ladder. A cage may also be called a "cage guard" or "basket guard." The proposed definition is essentially the same as the definition in existing paragraph (e)(11), but was revised for clarity. This proposed definition is also consistent with ANSI A14.3–2002, American National Standard for Ladders—Fixed—Safety Requirements.

Combination ladder. This term means a portable ladder that can be used as a stepladder, single extension ladder, trestle ladder, or a stairwell ladder. Its components may be used as a single ladder. This definition is consistent with ANSI A14.1–2000, American National Standard for Safety Requirements for Portable Wood Ladders; A14.2–2000, American National Standard for Safety Requirements for Portable Metal Ladders; and A14.5–2000, American National Standard for Safety Requirements for Portable Reinforced Plastic Ladders.

Designated area. This term means a distinct portion of a walking-working surface delineated by a perimeter warning line in which temporary work may be performed by employees without additional fall protection. The concept of a designated area is patterned after controlled access zones and warning line systems used in OSHA's construction standards at subpart M of part 1926.

Dockboard (bridge plate). This term means a portable or fixed device for spanning the gap or compensating for the difference in level between loading platforms and carriers.

Equivalent. This term means alternate designs, materials, or methods that the employer can demonstrate will provide an equal or greater degree of safety for employees compared to the design, material, or method specified in this subpart. The existing definition in paragraph (g)(6) has been revised for consistency with OSHA's construction standards at subpart M of part 1926. To be deemed "equivalent," the employer would have the burden of demonstrating that the alternate designs, materials, or methods will provide an equal or greater degree of safety for employees than the design, material, or method specified in this subpart.

Extension ladder. This term means a non-self-supporting portable ladder, adjustable in length. This proposed definition is consistent with ANSI A14.1–2000, ANSI A14.2–2000, and ANSI A14.5–2000, and removes the overly specific measurement criteria and is clearer and more concise than the definition in existing paragraphs (c)(4) and (d)(4) of § 1910.21.

Failure. This term means a load refusal, breakage, or separation of component parts. Load refusal is the point where the ultimate strength is exceeded. This term is consistent with OSHA's construction fall protection standard at § 1926.500(b), Definitions.

Fall hazard. This term means any condition on a walking-working surface that exposes an employee to injury from a fall on the same level or to a lower level.

Fall protection. This term means any equipment, device, or system that prevents an employee from experiencing a fall from elevation or that mitigates the effect of such a fall. Examples of fall protection include, but are not limited to, guardrail systems, ladder safety systems, and personal fall arrest systems.

Fixed ladder. This term means a ladder, including an individual rung ladder, which is permanently attached to a structure, building, or equipment. It does not include ship stairs or manhole steps. This definition is essentially the same as existing paragraph (e)(2) of § 1910.21, and clarifies that the term includes individual rung ladders but not ship stairs or manhole steps. The proposed definition is consistent with ANSI A14.3–2002.

Grab bars. This term means individual handholds placed adjacent to or as an extension of ladder side rails for the purpose of providing access beyond the limits of a ladder.

Guardrail system. This term means a barrier erected to prevent employees from falling to lower levels. Existing subpart D uses the terms "guardrail" and "standard railing." Both terms are defined as a barrier to prevent falls to lower levels. OSHA proposes to use one term—guardrail system to describe this type of barrier. The proposed definition is consistent with both subparts L—Scaffolds, and M—Fall Protection of the construction industry standards.

Handrail. This term means a rail used to provide employees with a handhold for support. There are three definitions for the term "handrail" in existing subpart D. OSHA proposes to define the term to be consistent with Subpart X—Stairways and Ladders of the construction industry standards.

Hoist area. This term means any elevated access opening to a walking-working surface where hoisted equipment or materials are loaded or received. The existing rule does not use the term "hoist area," whereas the proposed rule does.

Hole. This term means a gap or void 2 inches (5 cm) or more in its least dimension, in a floor, roof, or other walking-working surface. The existing standard defines holes and openings separately; however, the treatment of each is essentially the same. The existing rule defines a floor *hole* as an opening less than 12 inches (30 cm) but more than 1 inch (3 cm) in its least dimension through which materials may fall, and defines a floor *opening* as a hole measuring 12 inches (30 cm) or more in its least dimension through which persons may fall. To bring clarity to the terms and consistency with its fall protection rules in construction industry standards, OSHA is proposing to use the term "hole" to describe all voids and gaps (holes and openings) in floors, roofs, and other walking-working surfaces. Likewise, OSHA is proposing to use the term "opening" to describe voids and gaps in vertical surfaces such as walls and partitions.

Individual rung ladder. This term means a ladder consisting of rungs individually attached to a structure, building, or piece of equipment. It does not include manhole steps. The proposed definition has been editorially revised from the existing definition in paragraph (e)(3) to clarify its meaning, and to make it clear that manhole steps are not considered individual rung ladders.

Ladder. This term means a device with rungs, steps, or cleats typically used to gain access to a different elevation. This proposed definition for the term is consistent with the definitions used in the ANSI A14 consensus standards that are applicable to various types of ladders. Additionally, the proposed language is more concise than the existing definitions of the term.

Ladder safety system. This term means a device, other than a cage or well, designed to eliminate or reduce the possibility of falls from ladders. A ladder safety system usually consists of a carrier (the track of flexible cable or rigid rail), safety sleeve (moving component which travels on the carrier), lanyard, connectors, and body belt or harness. The term "ladder safety system" is not used or defined in existing OSHA standards; however, the synonymous term "ladder safety device" is defined in existing construction industry standards for fixed ladders at subpart X. The proposed definition is consistent with the definition in the

national consensus standard applicable to fixed ladders, ANSI A14.3–2002.

Lower level. This term means an area to which an employee could fall. Such areas include ground levels, floors, roofs, ramps, runways, excavations, pits, tanks, materials, water, equipment, and similar surfaces. This definition is consistent with that located in the construction industry standards in subpart M.

Manhole steps. This term means steps individually attached or set into the walls of a manhole structure.

Maximum intended load. This term (also referred to as the "designed working load") means the total load of all employees, equipment, tools, materials, transmitted loads, and other loads reasonably anticipated to be applied to a walking-working surface. It is based on and consistent with the definition in the construction industry standards in subpart M.

Mobile. This term means manually propelled and/or movable. This is a clarification of existing paragraph (g)(12) which simply defines the term as "manually propelled." The proposed definition is consistent with ANSI A14.7–2006, Safety Requirements for Mobile Ladder Stands and Mobile Ladder Stand Platforms, and facilitates the definition of the next two terms. OSHA requests comment on whether the term "mobile" is so common that defining it in the final rule is unnecessary.

Mobile ladder stand. This term (also known as "ladder stand") means a mobile, fixed-size, self-supporting ladder consisting of wide flat treads in the form of steps accessing a top step. The assembly may include handrails and is intended for use by one employee. This definition is consistent with ANSI A14.7–2006, American National Standard for Mobile Ladder Stands and Mobile Ladder Stand Platforms. The definition for ladder stand in existing paragraph (g)(9) of § 1910.21 has been incorporated into the proposed definition of "mobile ladder stand."

Mobile ladder stand platform. This term means a mobile fixed-height, self-supporting unit having one or more standing levels, provided with means of access to or egress from the platform or platforms. This definition is consistent with ANSI A14.7–2006, American National Standard for Mobile Ladder Stands and Mobile Ladder Stand Platforms.

Opening. This term means a gap or void 30 inches (76 cm) or more high and 18 inches (46 cm) or more wide in any wall or partition through which employees can fall to a lower level. This definition is consistent with ANSI A10.18–1996, Safety Requirements for Temporary Floor Holes, Wall Openings, Stairways and Other Unprotected Edges—American National Standard for Construction and Demolition Operations, and the construction industry standard at § 1926.500, and would replace existing paragraphs (a)(2) and (a)(11) of § 1910.21 that defined "floor opening" and "wall opening" (*see* above discussion under "hole"). This is another area where the Agency would harmonize construction and general industry regulations to make them more understandable, thereby increasing compliance and employee safety.

Platform. This term means a walking-working surface elevated above the surrounding area. This definition is based on and consistent with the construction industry standard at § 1926.450(b), and would replace existing definitions in paragraphs (a)(4) and (b)(4) of § 1910.21.

Portable ladder. This term means a ladder that can readily be moved or carried and usually consists of side rails joined at intervals by steps, rungs, cleats, or rear braces. The definition is identical to ANSI A14.1–2000, American National Standard for Safety Requirements for Portable Wood Ladders, ANSI A14.2–2000, American National Standard for Ladders—Portable Metal—Safety Requirements, and ANSI A14.5–2000, American National Standard for Safety Requirements for Portable Reinforced Plastic Ladders.

Qualified. This term describes a person who, by possession of a recognized degree, certificate, or professional standing, *or* who by extensive knowledge, training, and experience has successfully demonstrated the ability to solve or resolve problems relating to the subject matter, the work, or the project. This definition is consistent with proposed subpart I, the shipyard employment standards, and the construction industry standard in § 1926.32.

Qualified climber. This term means an employee engaged in outdoor advertising work who, by virtue of physical capabilities, training, work experience and job assignment, is authorized by the employer to climb fixed ladders without using fall protection.

Rope descent system. This term means a suspension device that supports one employee in a chair (seat board) and allows the user to descend in a controlled manner and to stop at any time at a desired level of descent. A rope descent system is a variation of the single-point adjustable suspension scaffold. It is also known as a controlled descent device, controlled descent equipment, or controlled descent apparatus. Existing subpart D does not regulate rope decent systems, thus there is no existing definition for the term. The proposal, on the other hand, contains new requirements for rope decent systems since these are widely used in general industry. The proposed definition is based on the national consensus standard ANSI/IWCA I–14.1–2007, Window Cleaning Safety.

Rung, step, or cleat. This term means, when used on a ladder, a cross-piece on which a person may step to ascend or descend. The proposed definition combines the existing definitions for rungs, steps, and cleats.

Runway. This term means a passageway for employees, elevated above the surrounding floor or ground level, such as a catwalk, a foot walk along shafting, or a walkway between buildings. The proposed definition is consistent with the existing definition, and has been revised for clarity.

Safety factor. This term means the ratio of the design load and the ultimate strength of the material.

Scaffold. This term means any temporary elevated or suspended platform, and its supporting structure, including points of anchorage, used to support employees or materials or both. The term "scaffold" would not include crane or derrick suspended personnel platforms. This term is consistent with § 1926.450(b), and replaces the definitions in existing paragraphs (f)(27) and (g)(15) of § 1910.21.

Ship stairs (ship ladders). This term means a stairway that is equipped with treads and stair rails that has a slope between 50 and 70 degrees from the horizontal and has open risers. Ship stairs are also called "ship ladders."

Spiral stairway. This term means a stairway having a helical (spiral) structure attached to a supporting pole.

Stair rail or stair rail system. This term means a vertical barrier (such as rails, decorative panels, and mesh) erected along open sides of stairways to prevent employees from falling to lower levels. The top surface of a stair rail system may also serve as a handrail. The proposed definition would replace existing definitions in paragraphs (a)(8), (b)(5), and (e)(5) of § 1910.21.

Standard stairs. This term means a permanently installed stairway. Ship stairs, spiral stairs, and alternating tread-type stairs are not standard stairs.

Stepladder. This term means a self-supporting portable ladder, non-adjustable in length, with flat steps and a hinged back. The definition would replace those found in existing paragraphs (c)(2) and (d)(2) of § 1910.21

that also contain specifications for length measurements.

Step bolt (pole step). This term means a bolt or rung attached at intervals along a structural member and used for foot placement during climbing or standing. Step bolts are also called "pole steps." This definition is consistent with the one found in § 1910.269.

Stepstool. This term means a self-supporting, foldable, portable ladder, nonadjustable in length, 32 inches (81 cm) or less in overall size, with flat steps and without a pail shelf, designed so that the ladder top cap, as well as all steps, can be climbed on. The side rails may continue above the top cap. This definition is consistent with ANSI A14.2–2000.

Through ladder. This term means a type of fixed ladder designed to allow a person to get off at the top by stepping through the ladder to reach a landing. The existing term found in § 1910.21(e)(15) is revised for clarity.

Tieback. This term means an attachment from an anchorage (e.g., structural member) to a supporting device. This definition is consistent with ANSI A10.8–2001, American National Standard for Construction and Demolition Operations—Safety Requirements for Scaffolding.

Toeboard. This term means a low protective barrier that will prevent the fall of materials and equipment to lower levels and provide protection from falls for employees. This definition is consistent with OSHA's construction industry standards at § 1926.500(b), and is consistent with, and would replace, the existing definition in § 1910.21(a)(9), (f)(31), and (g)(16).

Unprotected sides and edges. This term means any side or edge of a walking-working surface (except at entrances to points of access) where there is no wall or guardrail system at least 39 inches (99 cm) high. This definition is consistent with § 1926.500(b) and replaces the phrase "open-sided floors, platforms, and runways" used in existing § 1910.23(c)(1).

Walking-working surface. This term means any surface, horizontal or vertical, on or through which an employee walks, works, or gains access to a workplace location. Walking-working surfaces include, but are not limited to, floors, stairs, steps, roofs, ladders, ramps, runways, aisles, and step bolts.

Section 1910.22 General Requirements

OSHA proposes to revise the existing requirements contained in § 1910.22, and introduce new requirements addressing general hazards associated with all walking-working surfaces. The existing requirements in § 1910.22 address the scope of subpart D—housekeeping, aisles and passageways, covers and guardrails, and floor loading protection. Where language of the existing standards appropriately addresses surface hazards, OSHA proposes to use that language with editorial corrections as necessary. The revised performance-oriented provisions are designed to eliminate detailed specifications and facilitate compliance.

Proposed paragraph (a)(1) requires that all places of employment, passageways, storerooms, and service rooms be kept clean and orderly, and in a sanitary condition. Proposed paragraph (a)(2) requires that floors of workrooms be maintained in a clean and, so far as possible, dry condition. It also requires that, where wet processes are used, drainage be maintained, and false floors, platforms, mats, or other dry standing places be provided when practicable. OSHA does not expect all surfaces to be maintained in a pristine manner; however, surfaces must be maintained in a condition that will prevent slips, trips, falls, and other hazards. These two provisions are identical to existing § 1910.22(a)(1) and (a)(2).

Historically, OSHA interpreted these provisions as applying to combustible-dust accumulations associated with fire and explosion hazards. Regarding this interpretation, one court stated that "the housekeeping standard is not limited to tripping and falling hazards, but may be applied to [a] significant accumulation of combustible dust." *Con Agra, Inc.* v. *Occupational Safety and Health Review Com'n,* 672 F.2d 699, 702 (8th Cir. 1982), citing *Bunge Corp.* v. *Secretary of Labor,* 638 F.2d 831, 834 (5th Cir. 1981), which reached the same conclusion. (*See,* also, *Farmer's Co-op, 1982* WL 2222661 (O.S.H.R.C.); *CTA Acoustics (KY 2003),* CSB Report No. 2003–09–I–KY (February 2005); *Hayes Lemmerz Int'l (Indiana 2003),* CSB Report No. 2004–01–I–IN (September 2005).)

As these cases show, § 1910.22(a) serves as one of OSHA's most important enforcement tools for preventing combustible-dust accumulations, and it continues to be an important element of OSHA's enforcement strategy for this hazard; *see,* e.g., "Combustible Dust in Industry: Preventing and Mitigating the Effects of Fire and Explosion," OSHA Safety and Health Information Bulletin (SHIB) 07–31–2005, (2005, July 31), available at *http://www.osha.gov/dts/shib/shib073105.html*; "Hazard Alert: Combustible Dust Explosions," OSHA Fact Sheet (2008, March), available at *http://www.osha.gov/OshDoc/data_General_Facts/OSHAcombustibledust.pdf;* and OSHA Compliance Directive CPL–03–00–008, "Combustible Dust National Emphasis Program," (March 11, 2008), (replacing CPL 03–00–006, "Combustible Dust National Emphasis Program," October 18, 2007) available at *http://www.osha.gov/pls/oshaweb/owadisp.show_document?p_table=DIRECTIVES&p_id=3830.*

The Agency seeks comment on whether it should include an explicit reference to combustible dust or other hazardous material in the regulatory language of the final rule. This language would merely clarify OSHA's long-held interpretation: That § 1910.22(a) is not limited to the hazards of slips, trips, and falls, but also addresses any hazard that can be created when floors and work areas are not maintained in an orderly, clean, dry, and sanitary condition. Therefore, OSHA is seeking comment on the following questions: (1) Should OSHA reference combustible dust in either paragraph (a)(1) or (a)(2), or both; and (2) should OSHA reference other types of dust or other materials? Please explain your answers.

On December 27, 2007, in the notice of proposed rulemaking for General Working Conditions in Shipyard Employment (FR 72:72451), OSHA used the following language in proposed § 1915.81(d):

> The employer shall ensure that the floor or deck of every work area shall be maintained, so far as practicable, in a dry condition. Where wet processes are used, drainage shall be maintained and the employer shall provide false floors, platforms, mats or other dry standing places. Where this is not practicable, the employer shall provide appropriate waterproof footgear, such as rubber overboots, in accordance with Sec. 1915.152.

The Agency requests comment on whether it would be appropriate to use similar language in place of that proposed in paragraph 1910.22(a)(2). Furthermore, OSHA requests comment on the costs and benefits of this alternative.

In proposed paragraph (a)(3), OSHA requires employers to ensure that all surfaces be designed, constructed, and maintained free of recognized hazards that can result in death or serious injury to employees. This requirement's performance language replaces the more specific language in existing paragraph (a)(3) of § 1910.22.

Proposed paragraph (b) sets requirements for the application of loads. Proposed paragraph (b)(1) requires employers to ensure that all walking-working surfaces are designed, constructed, and maintained to support

their maximum intended load. These surfaces include, for example, platforms used with fixed ladders, and dockboards. Proposed paragraph (b)(2) would prohibit exceeding the maximum intended load. Proposed paragraphs (b)(1) and (b)(2) would replace existing paragraphs (d)(1) and (d)(2) of § 1910.22, which addressed floor and roof load limits. The intent of the proposed provisions is to ensure that walking-working surfaces are strong enough to support loads placed on them to protect employees from injury. The proposed language imposes essentially the same burden as the existing rule, but has been reworded for clarity and ease of understanding.

Additionally, the proposed provisions do not continue the existing requirement that employers post plates indicating load limits of the building/structure. This information was posted to indicate how much weight could safely be loaded onto a walking-working surface. Currently, this information is available from building plans, and usage and expected loads are taken into consideration when surfaces are designed. The proposed requirement puts the burden on the employer to ensure walking-working surfaces are strong enough to support any loads placed on them. OSHA believes the proposed language provides adequate protection to employees without the added burden on employers to gather and post information.

Proposed paragraph (c) requires employers to provide, and ensure use of, a safe means of access and egress from one level to another. This provision is patterned after a similar provision in the construction industry standards. The proposed language clearly expresses the Agency's intent—to ensure that employees are provided with and use appropriate, suitable means (such as stairways, ladders, or ramps) to go from one walking-working surface to another.

Proposed paragraph (d) is new and addresses the maintenance and repair of walking-working surfaces in general industry. Proposed paragraph (d)(1) requires the employer to ensure through regular and periodic inspection and maintenance that walking-working surfaces are in a safe condition for employee use. Proposed paragraph (d)(2) requires the employer to ensure that all hazardous conditions are corrected, repaired, or guarded to prevent employee use until repairs are made. Proposed paragraph (d)(3) requires that where hazardous conditions may affect the structural integrity of the walking-working surface, a qualified person must perform or supervise the maintenance or repair of that surface.

The intent of proposed paragraph (d) is to ensure that the employer, or the employer's designee, monitors walking-working surfaces to identify hazards that may lead to injury or death and to address those hazards promptly. A qualified person must perform or supervise the repair where hazards are of such a nature that the structural integrity of the walking-working surface may be affected. While the provision does not require the employer to develop an inspection schedule, or keep records of inspections, it does require the employer to ensure that inspections are conducted frequently enough so that hazards are corrected in a timely manner.

OSHA notes that the existing requirements in § 1910.22(b) and (c) are not retained in proposed subpart D because they duplicate provisions in § 1910.176, or the hazards are addressed elsewhere in the proposed rule, such as in the fall protection section.

Section 1910.23 Ladders

Proposed § 1910.23 is a revision and consolidation of existing ladder requirements in §§ 1910.25, 1910.26, and 1910.27, that regulate portable wooden, portable metal, and fixed ladders, respectively. Many of these requirements are retained in the proposed rule as OSHA believes they provide a reasonable and appropriate level of safety. Some requirements are revised for reasons of clarity, consistency, or to improve safety. Requirements common to all types of ladders are located in proposed paragraph (b), General requirements. Requirements specific to a particular type of ladder are located in proposed paragraphs (c), Portable ladders, or (d), Fixed ladders. Proposed paragraph (e) regulates mobile ladder stands and mobile ladder stand platforms. The proposed requirements have been updated and rewritten to be consistent with OSHA's construction industry ladder standard and the national consensus standards, *i.e.,* the ANSI A14 series for ladders.

Throughout this proposal, OSHA uses performance language whenever appropriate. However, in this section, a number of specifications are proposed with regard to clearances and rung widths for ladders. OSHA believes the specifications in this section, which are based upon human factors engineering (Ex. OSHA–S041–2006–0666–0004), are necessary and reflect the requirements of the ANSI A14 series for ladders.

Paragraph (a) Application

Proposed paragraph (a) states that § 1910.23 covers all ladders used in general industry, except ladders that are designed into (an integral part of) a machine or piece of equipment and ladders that are used only for firefighting or rescue operations. OSHA recognizes that it would not be reasonable or practicable to write standards for ladders designed into a part of a machine or piece of equipment because of variable design restrictions such as limited space and unlimited equipment configurations. Therefore, OSHA is exempting such equipment from specific ladder requirements. However, OSHA reminds employers that any surface on which employees walk or work would still have to meet the general requirements of proposed § 1910.22.

OSHA is also proposing to exempt ladders used in firefighting or rescue operations because such ladders are used only in emergency situations. The Agency notes that the primary concern expressed in the design of some of those ladders, such as single-rail ladders, is for fast placement and access. By contrast, this proposed paragraph focuses on the need to protect employees who use ladders routinely, in non-emergency situations. Therefore, given the circumstance in which firefighting and rescue operations are conducted, OSHA believes that it would be inappropriate to regulate firefighting and rescue ladders under proposed § 1910.23. When employees are members of a company fire brigade they must be trained as required by § 1910.156 in the use of such ladders.

Paragraph (b) General Requirements for All Ladders

As noted above, OSHA is consolidating some of the existing requirements for portable and fixed ladders. Requirements that apply in general to all types of ladders are included in paragraph (b), reducing redundancy and enhancing consistency of ladder requirements.

Proposed paragraph (b)(1) requires ladder rungs and steps to be parallel, level, and uniformly spaced when the ladder is in position for use. The proposed provision is consistent with and based upon existing § 1910.25(c)(2)(i)(*b*) for portable wood stepladders and existing § 1910.27(b)(1)(ii) for fixed ladders. The proposed language is consistent with the construction industry standard at § 1926.1053(a)(2).

Proposed paragraphs (b)(2) and (b)(3) provide spacing requirements for rungs,

cleats, and steps. Spacing is measured between the center lines of the rungs, cleats, and steps.

Proposed paragraph (b)(2) applies to all ladders except ladders in elevator shafts and telecommunication towers. Proposed paragraph (b)(2) permits flexibility in rung, step, and cleat spacing, as long as the rungs are parallel, level, and uniformly spaced, as required in the preceding paragraph. The proposed paragraph is a revision of requirements in existing § 1910.26(a)(1)(iii) which requires rungs to be spaced 12 inches (30 cm) apart, and existing paragraphs § 1910.25(c)(2)(i)(*b*) and § 1910.27(b)(1)(ii), which require rungs to be spaced not more than 12 inches (30 cm) apart. The proposed provision, which permits spacing of not less than 10 nor more than 14 inches apart, is consistent with the construction industry standard at § 1926.1053(a)(3)(i). It will not require any change to ladders that are already in compliance with the existing standard.

An exception to the spacing requirement in proposed paragraph (b)(2) of this section provides that rungs and steps on ladders in elevator shafts must be spaced no less than 6 inches (15 cm) apart, nor more than 16.5 inches (42 cm) apart, as measured along the ladder siderails. Another exemption is provided for fixed ladders on telecommunication towers which sets rung or step spacing at a maximum of 18 inches (46 cm). These exceptions are necessary due to the space restrictions in these areas. The latter part of the provision is consistent with the existing requirements for rungs and steps in § 1910.268(h)(2).

Proposed paragraph (b)(3) requires rungs, cleats, and steps of stepstools to be spaced between 8 inches (20 cm) and 12 inches (30 cm) apart, as measured between center lines of the rungs, cleats, or steps. There is no existing requirement regulating spacing on stepstools. OSHA is proposing this requirement because it believes that stepstools are routinely used in general industry and they should not be treated as portable ladders. This provision is consistent with the construction industry standard at § 1926.1053(a)(3)(ii) and is based on the national consensus standards ANSI A14.1–2000 and ANSI A14.2–2000. OSHA believes that virtually all stepstools currently in use already meet the proposed requirements.

Proposed paragraph (b)(4) requires ladder rungs and steps to have a minimum clear width of 11.5 inches (29 cm) for portable ladders and 16 inches (41 cm) for individual rung and fixed ladders. The proposal consolidates existing requirements in § 1910.25(c)(2)(i)(*c*), § 1910.26(a)(2)(i), and § 1910.27(b)(1)(iii). The proposed revision is consistent with both the construction industry standard at § 1926.1053(a)(4)(i) and (a)(4)(ii) and the national consensus standards in the ANSI A14 series for ladders. A note to proposed paragraph (b)(4) explains how to measure the width when a ladder safety system is used on a fixed ladder. An exception to the provision is provided in (b)(4)(i) for narrow rungs that are not designed to be stepped on, such as those on the top end of fruit pickers' ladders.

Proposed paragraph (b)(4)(ii) provides an exception for manhole entry ladders that are supported by manhole openings, and requires that they have rungs or steps with a clear width of at least 9 inches (23 cm). The width would increase the available climbing space for employees to pass through the manhole opening.

A final exception is provided in proposed paragraph (b)(4)(iii), which permits rolling ladders used in the telecommunication industry to have a minimum clear step or rung width of 8 inches (20 cm). This provision has been moved, without change, from § 1910.268(h)(5).

Proposed paragraph (b)(5) prohibits wooden ladders from being coated or covered with any material that may obscure structural defects. For the purposes of this paragraph, OSHA does not consider manufacturer-applied warning and informational labels to be coverings that obscure structural defects. This requirement is consistent with the construction industry standard at § 1926.1053(a)(12) and national consensus standard, ANSI A14.1–2000.

Proposed paragraph (b)(6) requires that metal ladders be protected against corrosion. For example, ladders may be made more corrosion resistant by painting or the ladder may be made of a material that is inherently corrosion-resistant. The proposed requirement is essentially the same as existing requirements in § 1910.26(a)(1) and § 1910.27(b)(7)(i), which require employers to take some action to protect against corrosion.

Proposed paragraph (b)(7) requires ladder surfaces to be free of puncture or laceration hazards. The proposed provision is a consolidation of similar requirements found in existing § 1910.25(b)(1)(i) and (c)(2)(i)(f), § 1910.26(a)(1) and (a)(3)(viii), and § 1910.27(b)(1)(iv).

Proposed paragraph (b)(8) requires that ladders be used only for the purposes for which they were designed. This proposed requirement is based on requirements applicable to portable wooden ladders in existing § 1910.25(d)(2) and portable metal ladders in existing § 1910.26(c)(3)(vii). The intent of this requirement is to prohibit the use of a ladder as a scaffold plank, gangway, material hoist, brace, or other application unless it is designed for that application. The intent of the proposed paragraph is *not* to prohibit employees from working while on ladders, for example, performing painting activities while on a ladder. OSHA believes the requirement is reasonable for all ladders, and no additional burden is anticipated.

Proposed paragraph (b)(9) requires ladders to be inspected before use to identify any visible defects that could cause employee injury. This requirement is essentially the same as requirements in existing § 1910.25(d)(1)(x) for portable wooden ladders and § 1910.27(f) for fixed ladders. It is also consistent with requirements in the ANSI A14 series national consensus standards for ladders.

OSHA's intent is that a short visual inspection of the ladder be made to ensure that it is properly set up and safe to use. The inspection may include such things as checking for firm footing, engagement of spreader or locking devices (if so equipped) and missing or damaged components of the ladder. OSHA does not expect a ladder to be inspected multiple times per work shift, unless there is a reason to believe a ladder may have been damaged due to an event such as being dropped. After the employee is trained to inspect ladders (*see* § 1910.30, Training) the actual inspection process could be accomplished as the employee sets up, approaches, or climbs the ladder.

Proposed paragraph (b)(10) requires ladders with structural or other defects to be tagged "Do Not Use" or with similar language, in accordance with § 1910.145. It also requires the ladder to be removed from service until repaired, in accordance with § 1910.22(d), or replaced. This proposed paragraph is a consolidation and editorial revision of existing requirements in § 1910.25(d)(1), § 1910.26(c)(2), and § 1910.27(b).

Proposed paragraphs (b)(11), (b)(12), and (b)(13), together, enable employees to climb ladders safely by using proper climbing techniques and prohibiting employers from permitting employees to carry materials that would prevent them from having both hands free to hold onto the ladder. The proposed paragraphs are consistent with the construction industry standards at § 1926.1053(b)(20), (b)(21), and (b)(22),

and generally consistent with the ANSI A14 series consensus standards for ladders. OSHA's intent is for employers to ensure that employees maintain three points of contact with the ladder when ascending or descending. (Please note this requirement *only* addresses the act of moving up or down a ladder, not working from a ladder.)

Paragraph (c) Portable Ladders

Proposed paragraph (c) sets specific, additional requirements for portable ladders. OSHA proposes to: (1) Remove many existing paragraphs that contain detailed specifications for the design and construction of portable ladders, and (2) no longer address special-purpose ladders, such as painter's stepladders and mason's ladders, in individual paragraphs. In this rulemaking, OSHA uses performance-oriented language, where possible.

Proposed paragraph (c)(1) requires that rungs and steps of portable metal ladders be corrugated, knurled, dimpled, coated with skid-resistant material, or otherwise treated to minimize the possibility of slipping. This provision is nearly identical to existing § 1910.26 (a)(1)(v), and has been editorially changed for clarity.

Proposed paragraph (c)(2) requires that each stepladder or any combination ladder that is used in a stepladder mode be designed with a metal spreader or locking device to hold the front and back sections securely in an open position while in use. This requirement has been changed for clarity and is consistent with existing requirements in § 1910.25(c)(2)(i)(*f*) and § 1910.26(a)(3)(viii).

Proposed paragraph (c)(3) prohibits loading ladders beyond the maximum intended load for which they were designed and tested, or beyond the manufacturer's rated capacity. The maximum intended load, as defined in proposed paragraph § 1910.21(b), includes the weight of the worker and all tools and supplies carried. Manufactured ladders are designed, tested, and in most cases, load-rated and labeled.

Proposed paragraph (c)(4) requires that ladders be used only on stable and level surfaces unless the ladders are secured or stabilized to prevent accidental displacement. The proposed paragraph replaces similar language in existing § 1910.25(d)(2)(iii) and § 1910.26(c)(3)(iii) and is consistent with the construction industry standard at § 1926.1053(b)(6) and ANSI A14.1–2000.

Proposed paragraph (c)(5) prohibits the use of portable single-rail ladders. The provision is consistent with the construction industry ladder standard at § 1926.1053(b)(19). In the preamble to the final rule of that standard (55 FR 47681, November 14, 1990), OSHA said it was prohibiting their use because it believed "that single-rail ladders are inherently difficult to use and hazardous because of their instability * * *." OSHA believes that single rail ladders are also unsafe in general industry.

Proposed paragraph (c)(6) is new and requires that ladders not be moved, shifted, or extended while occupied by an employee. Moving a ladder while it is occupied is unsafe, whether an employee on a ladder "hops" with the ladder in a lateral direction, or a ladder is extended or moved laterally by one employee while occupied by another. This is identical to the construction industry requirement at § 1926.1053(b)(11).

Proposed paragraph (c)(7) requires that ladders placed in any location where they can be displaced by other activities or by traffic, such as ladders used in passageways, doorways, or driveways, be secured to prevent accidental displacement unless a temporary barricade, such as a row of traffic cones, is used to keep the activities or traffic away from the ladder. The proposed paragraph is clearer than existing § 1910.25(d)(2)(iv) and identical to the existing construction industry requirement at § 1926.1053(b)(8).

Proposed paragraph (c)(8) is an editorial revision of existing § 1910.25(d)(2)(xii) which prohibits the top of a stepladder from being used as a step because it may decrease stability.

Proposed paragraph (c)(9) prohibits the use of a non-self-supporting ladder on slippery surfaces unless it is secured and stabilized to prevent accidental displacement. This paragraph is consistent with existing requirements in § 1910.25(d)(2)(i) and the construction industry standard at § 1926.1053(b)(7). It is based upon ANSI A14.1–2000.

Proposed paragraph (c)(10) requires the top of a non-self-supporting ladder be placed with the two rails supported unless it is equipped with a single support attachment. Such an attachment is designed to provide greater stability. This is consistent with the existing requirement in § 1910.26(c)(3)(iv) and the construction industry standard at § 1926.1053(b)(10).

Proposed paragraph (c)(11) requires that when portable ladders are used to gain access to an upper landing surface, the ladder side rails must extend at least 3 feet (0.9 m) above that upper landing surface. This additional length enables an employee to hold onto the ladder while stepping from the ladder onto the upper landing surface, providing safer access. The proposed paragraph is consistent with the existing requirement in § 1910.25(d)(2)(xv) and ANSI A14.1–2000. OSHA notes that after-market ladder extensions, such as walk-through railing systems, may be used to increase the length of a ladder to meet this requirement. When the ladder's top rung is level with or slightly below the upper landing surface, and the rail extensions are securely attached (that is, secured to the extent necessary to stabilize the extension and not expose the employee to a falling hazard from the extension's displacement), the rail extensions would be considered part of the ladder itself. The use of ladder extensions would also have to meet the requirements of proposed (c)(14) of this section which states that ladders shall not have their reach increased by other means unless specifically designed for the application.

Proposed paragraph (c)(12) requires that when work is performed on or near electrical circuits, the work practice requirements of subpart S, Electrical, apply to protect against electrical hazards. The proposed requirement is essentially the same as existing § 1910.26(c)(3)(viii).

Proposed paragraph (c)(13) prohibits ladders and ladder sections from being tied or fastened together to provide a longer length unless they are specifically designed for such use. The proposed provision is essentially the same as existing § 1910.26(c)(3)(vi), and is intended to prevent employees from using unsafe rigging methods.

Proposed paragraph (c)(14) prohibits ladders and ladder sections from having their reach increased by other means (for example, placing a box under a ladder), unless the length extension is specifically designed for the application. This proposed requirement replaces existing § 1910.25(d)(2)(v), which explicitly lists boxes and barrels, with more general language. This proposed paragraph is consistent with the ANSI A14 series consensus standards.

Paragraph (d) Fixed Ladders

In paragraph (d), OSHA proposes to revise existing § 1910.27 to eliminate unnecessary, overly specific requirements and to clarify and update others. To assist in compliance, OSHA has included figures D–2 through D–5 in the regulatory language.

In paragraph (d)(1), OSHA proposes that fixed ladders be capable of supporting their maximum intended load. This provision replaces the current specification requirement with a more

general performance requirement. The Agency requests comment on whether the existing provisions should be maintained in lieu of the proposed requirement.

Proposed paragraph (d)(2) would apply to new installations, requiring that fixed ladders installed on or after the effective date of the final rule be designed, constructed, and maintained as proposed in (d)(2)(i) and (ii).

Proposed paragraph (d)(2)(i) requires that fixed ladders be capable of supporting at least two live loads of at least 250 pounds (113 kg) each, concentrated between any two consecutive attachments, as well as anticipated loads caused by ice buildup, winds, rigging, and impact loads (e.g., impact load resulting from an employee falling onto the ladder). If it is anticipated that the ladder will be used by more than two employees simultaneously, then the number and position of additional concentrated live loads of 250 pounds (113 kg) must also be included in determining the capabilities of fixed ladders. Proposed paragraph (d)(2)(ii) requires that each step or rung be capable of supporting at least a single concentrated load of 250 pounds (113 kg) applied in the middle of the step or rung.

OSHA proposes the two provisions in (d)(2)(i) and (d)(2)(ii) as a replacement for existing requirements in § 1910.27(a)(1)(i) to (iv). Existing § 1910.27(a)(1)(i) requires the ladder to support only a single concentrated load of 200 pounds, whereas the proposal requires the ladder to support greater loads. The proposal is consistent with the national consensus standard, ANSI A14.3–2002, and OSHA's construction industry standard at § 1926.1053(a)(1)(iii). The Agency notes that the ANSI requirement, which is based on loads of 250 pounds (113 kg), reflects OSHA's belief that 250 pounds (113 kg) is the average weight of an employee with tools.

Proposed paragraph (d)(3) requires that the minimum perpendicular distance from the centerline of the steps and rungs, or grab bars, or both, to the nearest permanent object in back of the ladder be 7 inches (18 cm), except in the case of an elevator pit ladder, for which a minimum perpendicular clearance of 4.5 inches (11 cm) is required. In addition, the employer must ensure that grab bars do not protrude on the climbing side beyond the rungs of the ladder which they serve. The proposed requirement is a revision of existing § 1910.27(c)(4) and (c)(5) in which OSHA has removed the language that allows for a reduction of the minimum clearance to account for unavoidable obstructions. As OSHA stated in the final rule to the construction industry standard, "[it] believes that, in general, the minimum clearance requirement is necessary, regardless of any obstructions, so that employees can get safe footholds on ladders." (55 FR 47675.) This change is consistent with the most recent edition of the pertinent provisions of the national consensus standard, ANSI A14.3–2002, as well as the construction industry standard at § 1926.1053(a)(13).

Proposed paragraphs (d)(4) through (d)(8) address ladder extensions and grab bars. To provide safe transition from a fixed ladder to a landing surface, fixed ladders (except those at the top of manholes) must extend above the access or egress level or landing platform either by the continuation of the rungs for use as horizontal grab bars or by providing vertical grab bars. Proposed paragraph (d)(4) requires side rails of through or side-step ladders to extend 42 inches (1.1 m) above the top of the access level or landing platform served by the ladder. For a parapet ladder, the access level must be the roof if the parapet is cut to permit passage through the parapet; if the parapet is continuous, the access level must be the top of the parapet.

Proposed paragraph (d)(5) requires the steps or rungs of through ladder extensions to be omitted from the extensions. In addition, the extensions of the side rails must be flared to provide not less than 24 inches (61 cm) nor more than 30 inches (76 cm) clearance between side rails. Where ladder safety systems are provided, the maximum clearance between side rails of the extensions must not exceed 36 inches (91 cm). Proposed paragraph (d)(6) requires the side rails and the steps or rungs of side-step ladders to be continuous in the extension.

The proposed requirements in (d)(4), (d)(5), and (d)(6) are a revision and update of the existing requirement at § 1910.27(d)(3). The proposed provisions are consistent with OSHA's construction industry standard at §§ 1926.1053(a)(24) through (a)(26) and with the national consensus standard, ANSI A14.3–2002.

Proposed paragraphs (d)(7) and (d)(8) specify criteria for grab bars. The proposed requirements are consistent with existing § 1910.27(d)(4), but are editorially revised for clarity.

Proposed paragraph (d)(9) addresses ladders that terminate at hatch covers. The proposed provision requires that the opening be large enough for the employee to pass and that it be counterbalanced to remain open, thus preventing accidental closure. The proposed requirement replaces the overly specific provision of existing § 1910.27(c)(7) and is consistent with similar provisions in the national consensus standard, ANSI A14.3–2002.

Proposed paragraph (d)(10) requires fixed individual rung ladders to be constructed to prevent the employee's feet from sliding off the end. This requirement replaces existing § 1910.27(b)(1)(v) and is consistent with the construction industry standard at § 1926.1053(a)(5).

Proposed paragraph (d)(11) prohibits the use of fixed ladders having a pitch greater than 90 degrees from the horizontal. The proposed provision is a revision of the existing requirements in § 1910.27(d)(1) through (d)(4). The existing requirements are overly specific and complex, whereas the proposed provisions are easier to understand.

Proposed paragraph (d)(12) addresses the step-across distance from the centerline of the steps or rungs of a fixed ladder. Proposed paragraph (d)(12)(i) requires that the step-across distance for *through ladders* be between 7 inches (18 cm) and 12 inches (30 cm) to the nearest edge of the structure, building, or equipment accessed. Proposed paragraph (d)(12)(ii) requires that the step-across distance be between 15 inches (38 cm) and 20 inches (51 cm), measured from the centerline of the ladder, at the point of access and egress to a platform edge for *side-step ladders.* (*See* Figure D–2.) The proposed provisions are based on existing § 1910.27(c)(6), which address the step-across distances for all fixed ladders. In the proposal, OSHA addresses step-across distances for through ladders and side-step ladders separately. OSHA believes the revised language allows greater flexibility and provides the same degree of safety. It is also consistent with the construction industry standard at § 1926.1053(a)(16) and the national consensus standard for fixed ladders, ANSI A14.3–2002.

Proposed paragraph (d)(13) addresses fixed ladders without cages or wells. Proposed paragraph (d)(13)(i) requires ladders without cages or wells to have a clear width of at least 15 inches (38 cm) on each side of the centerline of the ladder to the nearest permanent object to allow safe climbing clearance (*see* Figure D–2). This proposed provision revises existing § 1910.27(c)(2) for clarity. It is also consistent with the construction industry standard at § 1926.1053(a)(17) and the national consensus standard for fixed ladders, ANSI 14.3–2002.

Proposed paragraph (d)(13)(ii) requires a minimum perpendicular distance of 30 inches (76 cm) from the

center line of the steps and rungs to the nearest object on the climbing side to allow safe climbing clearance. This proposed provision would replace a number of specifications found at existing § 1910.27(c)(1) for clearance distances based on the pitch of the ladder. The proposed language removes the overly detailed information and establishes a single, minimum clearance distance regardless of pitch. This proposed provision is consistent with the construction industry standard at § 1926.1053(a)(14) and the national consensus standard for fixed ladders, ANSI A14.3–2002. An exception is permitted when unavoidable obstructions on the climbing side of a fixed ladder are encountered. The minimum clearance then may be reduced to 24 inches (61 cm), as long as deflector plates are provided to protect the employee's head. A similar exception may be found in existing § 1910.27(c)(7) and its accompanying Figure D–5. This proposed paragraph is consistent with the construction industry standard at § 1926.1053(a)(15) and national consensus standard, ANSI A14.3–2002.

Paragraph (d) ends with a note stating that the duty to provide fall protection for employees working on fixed ladders is found at proposed § 1910.28 and the criteria for such fall protection systems is found at proposed § 1910.29.

Paragraph (e) Mobile Ladder Stands and Mobile Ladder Stand Platforms (Mobile Ladder Stands and Platforms)

Proposed paragraph (e) covers mobile ladder stands and mobile ladder stand platforms (mobile ladder stands and platforms). The proposed design requirements are a performance language revision of the design specifications provided in existing paragraphs (a) and (f) of § 1910.29. All of the requirements proposed in this paragraph are consistent with the consensus standard, ANSI A14.7–2006.

Proposed paragraph (e)(1) addresses general design requirements for mobile ladder stands and platforms. Proposed paragraph (e)(1)(i) requires mobile ladder stands and platforms to have a step width of at least 16 inches (41 cm). Proposed paragraph (e)(1)(ii) requires steps, standing levels, and platforms of mobile ladder stands and platforms be provided with a slip-resistant surface. This surface may be an integral part of the structure or may be provided by a durable, secondary process or operation, e.g., dimpling, knurling, shot-blasting, coating, metal spraying, or slip-resistant tape. These requirements provide employees with a reasonable level of safe footing.

The next two proposed paragraphs are important to the stability of the unit and the balance of the employee using it. Proposed paragraph (e)(1)(iii) requires that wheels or casters, when under load, be designed to support their proportional share of four times the rated load, plus the proportional share of the unit's weight. This requirement is consistent with the existing provision at § 1910.29(a)(4).

Proposed paragraph (e)(1)(iv) requires mobile ladder stands and platforms, which use wheels or casters, to be equipped with a system to impede horizontal movement. This proposed provision is written in performance language, replacing the existing specification requirements in § 1910.29(a)(4).

Proposed paragraph (e)(1)(v) requires that the maximum work surface heights of mobile ladder stands and platforms not exceed four times the least base dimension without additional support. When greater heights are needed to prevent toppling, outriggers, counterweights, or comparable means must be used to maintain this minimum base ratio. The proposed paragraph would replace similar existing requirements in § 1910.29(a)(3)(i) and (f)(2).

Proposed paragraph (e)(1)(vi) requires mobile ladder stands and platforms to be capable of supporting at least four times their intended load. This proposed paragraph replaces a similar requirement in existing § 1910.29(f)(5), which requires a safety factor of four.

Proposed paragraph (e)(1)(vii) prohibits moving mobile ladder stands and platforms when occupied. This new requirement is based on the national consensus standard ANSI A14.7–2006, and is intended to prevent employees from falling from a mobile ladder stand or platform when it is being moved. When the additional weight of an employee is added to the top of a unit, the center of gravity is raised and the unit is less stable than when there is no weight on it. Also, an employee may lose his or her balance when a unit moves suddenly, or when simply riding on a unit.

Proposed paragraph (e)(2) addresses design requirements for mobile ladder stands. Proposed paragraph (e)(2)(i) requires that steps be uniformly spaced and arranged with a rise of not more than 10 inches (25 cm), and a depth of not less than 7 inches (18 cm). The slope of the step stringer (inclined side step support) to which the steps are attached must not be more than 60 degrees measured from the horizontal. This proposed paragraph is essentially the same as existing § 1910.29(f)(3) except that the existing provision requires the slope of the steps section to be a minimum of 55 degrees, and a maximum of 60 degrees, measured from the horizontal.

Proposed paragraph (e)(2)(ii) requires all ladder stands with a top step height between 4 and 10 feet (1.2 m and 3 m) to be provided with handrails having a vertical height of 29.5 inches (75 cm) to 37 inches (94 cm) as measured from the front edge of a step. The use of removable gates or non-rigid members, such as chains, is permitted for special use applications. This proposed requirement is essentially the same as the existing provision at § 1910.29(f)(4)(ii), except that the existing requirement does not set a maximum height.

Proposed paragraph (e)(2)(iii) requires all ladder stands with a top step over 10 feet high (3 m) to have the top step protected on three sides by a handrail that has a vertical height of at least 36 inches (91 cm). The use of removable gates or non-rigid members such as chains is permitted for special use applications. Top steps that are 20 inches (51 cm) or more, front to back, must be provided with a midrail and toeboard.

Proposed paragraphs (e)(2)(ii) and (e)(2)(iii) replace existing paragraph § 1910.29(f)(4)(i), which requires units to be equipped with handrails when they have more than five (5) steps or measure 5 feet (1.5 m) in vertical height to the top step. This provision ensures employees have a handhold to prevent falling while they climb.

Proposed paragraph (e)(2)(iv) is new and requires the standing areas of mobile ladder stands to be within the base frame. This requirement enhances the stability of the unit by keeping the center of gravity within the base frame, thus reducing the chance of tipping.

Proposed paragraph (e)(3) addresses design requirements for mobile ladder stand platforms. Proposed paragraph (e)(3)(i) requires steps on a ladder stand platform to conform to paragraph (e)(2)(i) of this section. An exception to this requirement is provided when the employer demonstrates that conforming to paragraph (e)(2)(i) is not practicable. Steeper slopes or vertical ladders may be used, provided the unit is stabilized to prevent its overturning. OSHA realizes that in a few applications the steps to a mobile ladder stand platform may have to be greater than the required 60 degree maximum prescribed in proposed paragraph (e)(2)(i) of this paragraph. OSHA does not seek to prohibit the use of such units; however, this exception acknowledges that need and still provides for employee safety.

Proposed paragraph (e)(3)(ii) requires all mobile ladder stand platforms with a platform height between 4 feet and 10 feet (1.2 m and 3 m) to be provided with handrails having a vertical height of 29.5 inches (75 cm) to 37 inches (94 cm) measured from the front edge of a step. Handrails in the platform area are required to have a vertical height of at least 36 inches (91 cm) and include a midrail to protect employees from the fall hazard. This requirement is a clarification of the general provision found in proposed § 1910.29(b)(1). The use of removable gates or non-rigid members, such as chains, is permitted for special-use applications. This proposed requirement is essentially the same as the existing provision at § 1910.29(f)(4)(ii), except the existing requirement does not set a maximum height. OSHA is proposing a maximum height in accordance with anthropomorphic studies (Ex. OSHA–S041–2006–0666–0004).

Proposed paragraph (e)(3)(iii) requires all mobile ladder stand platforms with a platform height of over 10 feet (3 m) to have guardrails and toeboards provided on the exposed sides and ends of the platform. The use of removable gates or non-rigid members, such as chains, would be permitted for special-use applications. Toeboards prevent objects from falling onto employees who may be below the unit. The requirements in proposed paragraphs (e)(2) and (e)(3) are based on ANSI A14.7–2006, American National Standard for Mobile Ladder Stands and Mobile Ladder Stand Platforms.

Section 1910.24 Step Bolts and Manhole Steps

Proposed § 1910.24 establishes requirements for step bolts and manhole steps. Step bolts and manhole steps are used in the telecommunications industry, gas and electric utility industries, and some large manufacturing plants, usually in lieu of conventional ladders (*e.g.,* fixed ladders). While the Agency has a number of requirements addressing ladders, those requirements are not consistently or directly applicable to step bolts and manhole steps. For this reason OSHA is proposing requirements that address the design, capacity, and strength of step bolts and manhole steps. OSHA believes that these requirements provide for the safe use of this equipment. The provisions include the general requirements in existing § 1910.268(h) for pole steps and manhole ladders. Pole steps (normally used on wooden utility poles) and step bolts (normally used on metal poles or towers) are covered jointly under the proposed provisions for step bolts, and are based upon provisions in § 1910.268, Telecommunications, and the national consensus standards, American Society for Testing and Materials (ASTM) C 478–07, Standard Specification for Precast Reinforced Concrete Manhole Sections, and ANSI/TIA/EIA 222G–1996 and 2006, Structural Standard for Antenna Supporting Structures and Antennas.

OSHA recognizes that many workplaces already have step bolts or manhole steps installed, and that it could be unreasonably disruptive and burdensome to require employers to retrofit those bolts and steps to comply with certain provisions of the proposed standard. Therefore, OSHA is proposing certain design changes to step bolts and manhole steps on new installations performed 90 days after the standard's effective date. These proposed provisions are described individually below.

As part of this proposal, OSHA is removing the requirements in § 1910.268(h), and instead requiring that the telecommunications industry comply with the provisions for ladders, step bolts, and manhole steps in subpart D. Additionally, as per § 1910.269 (Electric power generation, transmission, and distribution), ladders, step bolts, and manhole steps used in the electric power industry must meet the requirements of subpart D. Therefore, OSHA is proposing § 1910.24 as the minimum requirements necessary to ensure the safety of employees climbing and descending step bolts and manhole steps. These provisions are essentially the same as those in the 1990 proposed rule (55 FR 13360).

The rules in proposed § 1910.24 are performance-based where possible. For example, proposed paragraph § 1910.24(a)(6) sets performance-based strength requirements that do not specify the types or sizes of materials that must be used. Where dimensions are specified, such as in paragraphs (b)(2)(iii) and (b)(2)(iv), they are based on anthropometrics, existing § 1910.268, and current industry practices and standards, such as the national consensus standard, ASTM C 478–07.

Paragraph (a) Step Bolts

Proposed paragraph (a) addresses the design, capacity, and use of step bolts. Proposed paragraph (a)(1) requires that all step bolts installed on or after the effective date of the final rule that are used in corrosive environments be constructed of, or coated with, a material that will retard corrosion of the step or bolt. This is important to protect against deterioration, and the resultant weakening of the step bolt.

Proposed paragraph (a)(2) requires step bolts to be designed to prevent the employee's foot from slipping or sliding off the end of the step bolt, which could contribute to a fall.

Proposed paragraph (a)(3) requires step bolts to be spaced uniformly, 12 inches (30 cm) minimum center to center, alternately spaced, and an 18 inches (46 cm) maximum spacing. To assist in compliance, OSHA has included figure D–6 in the proposed regulatory text. The proposed paragraph matches existing § 1910.268(h)(2) and the 1996 version of ANSI/EIA/TIA 222, both of which allow step bolts to be spaced as much as 18 inches (46 cm) apart, 36 inches (91 cm) on any one side. An exception to this requirement permits the spacing from the entry and exit surface to the first step bolt to be different from the spacing between the other step bolts. This exception allows the height of the entry or exit surface to be modified without necessitating the reinstallation of all the step bolts.

OSHA notes that the 2006 version of ANSI/EIA/TIA 222 specifies that the center to center spacing between alternately spaced step bolts be 10 inches (25 cm) minimum and 16 inches (41 cm) maximum as opposed to the 12- and 18-inch (30 and 46 cm) requirements of the proposal. The Agency requests comment on whether to adopt the language of the 2006 ANSI/EIA/TIA standard.

Proposed paragraph (a)(4) requires that the minimum clear width of each step bolt be 4.5 inches (11 cm). Proposed paragraph (a)(5) requires the minimum perpendicular distance between the centerline of the step bolt to the nearest permanent object in back of the bolt to be at least 7 inches (18 cm). Where obstructions cannot be avoided, toe clearances may be reduced to 4.5 inches (11 cm). Both of these provisions ensure there is adequate room both on and behind the step bolt to enable the employee to stand securely.

Proposed paragraph (a)(6) requires step bolts installed before the effective date of the final rule to be capable of supporting their maximum intended load. All walking-working surfaces must be capable of supporting employees and equipment, without failure. The proposed language of (a)(6) "grandfathers," or allows the continued use of, existing step bolts that are capable of supporting their maximum intended load.

Proposed paragraph (a)(7) requires each step bolt installed on or after the effective date of the final rule to be

capable of supporting, without failure, at least four times its maximum intended load. OSHA believes that this requirement is necessary to provide a safety factor to ensure that step bolts do not fail during use. Common engineering practice demands that a safety factor be provided in any product design to account for any unanticipated factors that may stress the product beyond its designed capabilities. OSHA's understanding is that a ⅝-inch (1.6-cm) diameter steel step bolt is normally expected to meet this requirement, and step bolts of this size are currently used in the industry.

Proposed paragraph (a)(8) requires step bolts to be visually inspected before each use and to be maintained in accordance with proposed § 1910.22. This provision reinforces the necessity to meet the general requirements of all walking-working surfaces. As with the requirements in proposed § 1910.22, this visual inspection is not intended to be burdensome, and can be performed as the employee climbs the unit.

Proposed paragraph (a)(9) requires step bolts that are bent more than 15 degrees from the perpendicular to be removed and replaced with bolts that meet the requirements of this section. The proposed requirement is intended to apply to displacement in any direction the bolt may be bent. The intent of this provision is to replace bolts that are bent to such a degree that an employee's foot may slip or slide off the end of the step bolt, which may cause an employee to fall.

Paragraph (b) Manhole Steps

Proposed paragraph (b) addresses the design, capacity, and use of manhole steps. Proposed paragraph (b)(1) requires manhole steps installed before the effective date of the final rule to be capable of supporting their maximum intended load. The proposed language "grandfathers," or allows the continued use of, existing manhole steps. Under proposed § 1910.22(b), employers would be obligated to ensure that all walking-working surfaces are designed, constructed, and maintained to support their maximum intended load. This provision is consistent with the requirements in existing § 1910.268(h) that address steps in manholes used in the telecommunications industry.

Proposed paragraph (b)(2) sets requirements for the design of manhole steps. The requirements apply to manhole steps installed on or after the effective date of the final rule. Proposed paragraph (b)(2)(i) requires that all manhole steps be provided with slip-resistant surfaces such as corrugated, knurled, or dimpled surfaces.

Proposed paragraph (b)(2)(ii) requires all manhole steps that are used in corrosive environments to be constructed of, or coated with, a material that will retard corrosion of the step. This corrosion resistance will help prevent deterioration that can lead to failure of the manhole step, which may cause the employee to fall.

Proposed paragraph (b)(2)(iii) requires that manhole steps have a minimum clear step width of 10 inches (25 cm). Proposed paragraph (b)(2)(iv) requires that steps be spaced uniformly, not more than 16 inches (41 cm) apart. As in proposed paragraph (a)(3) above, an exception to this requirement permits the spacing from the entry and exit surface to the first manhole step to be different from the spacing between the other steps. This exception allows for the height of the entry or exit surface to be modified without necessitating the reinstallation of the entire set of manhole steps.

Proposed paragraph (b)(2)(v) would require manhole steps to have a minimum perpendicular distance between the centerline of the manhole step to the nearest permanent object in back of the step of at least 4.5 inches (11 cm). Proposed paragraph (b)(2)(vi) requires the steps be designed to prevent the employee's foot from slipping or sliding off the end of the manhole step, which may result in a fall.

Proposed paragraph (b)(3) requires manhole steps to be visually inspected before each use and maintained in accordance with proposed § 1910.22. The purpose of the inspection is to ensure that no manhole steps are damaged or missing. This proposed paragraph is essentially a restatement of the requirements in proposed § 1910.22 for inspecting and maintaining walking-working surfaces. The visual inspection is expected to take only a few seconds before use of each step.

Section 1910.25 Stairways

Proposed § 1910.25 provides stairway design and installation criteria. This proposed section combines, clarifies, and updates existing requirements, and adds new provisions for stairs and stairways. The majority of the requirements for this section are derived from existing § 1910.24, Fixed industrial stairs, and are consistent with American National Standard Institute (ANSI) A1264.1–2007, Safety Requirements for Workplace Walking/Working Surfaces and Their Access; Workplace, Floor, Wall and Roof Openings; Stairs and Guardrail Systems, the National Fire Protection Association (NFPA) 101–2006, Life Safety Code, and the International Code Council's (ICC's) International Building Code ICC–2003.

On March 28, 2002, the Office of Management and Budget (OMB) published a request for comment regarding the "Draft Report to Congress on the Costs and Benefits of Federal Regulations" (67 FR 15014), specifically requesting nominations of rules and regulations in need of reform. In response to this request, the Copper and Brass Fabricators Council (CBFC) (Ex. 3) identified OSHA's subpart D as in need of revision to permit use of ship and spiral stairs. Specifically, CBFC requested that OSHA revise its existing rule in § 1910.24(b), which requires fixed stairs (referred to as standard stairs in this proposal) and prohibits spiral stairs except for special limited use and secondary access situations where it is not practical to provide a conventional stairway. CBFC suggested that OSHA revise this standard to permit the installation and use of ship stairs and spiral stairs in more circumstances. In the earlier rulemaking (1990), OSHA had proposed to allow more flexibility in the use of these stairs. In this proposed rule, OSHA would permit the installation of spiral, ship, and alternating tread-type stairs for limited secondary use where it is not practical to provide a standard stairway and provides design criteria for them. Provisions to prevent employees from falling from unprotected sides or edges of stairway landings are provided in proposed § 1910.28, Duty to have fall protection.

Paragraph (a) General Requirements

Proposed paragraph (a) contains general requirements applicable to all stairways. In this proposed rule, the Agency is using the term "standard stairs" in place of the term "fixed industrial stairs" which is used in the existing standard. OSHA has used the term "fixed industrial stair" since 1971 because the term was used in the national consensus standard ANSI A64.1–1968 (now ANSI A1264.1–2007) that prescribed requirements for them. OSHA believes the term "standard stairs" is clearer and easier to understand and therefore is proposing to use the new term. The Agency is proposing to define the term "standard stairs" to mean a permanently installed stairway and to make it clear that ship stairs, spiral stairs, and alternating tread-type stairs are not standard stairs.

OSHA's proposed change in terminology is consistent with current industry codes and standards that use the terms "standard stairs," "stairways," and "fixed stairs" interchangeably. The Life Safety Code (NFPA 101–2006)

includes requirements for "standard stairs" that are similar to OSHA's requirements for "fixed industrial stairs," but does not define "standard stairs." The International Building Code (IBC–2003) defines "stairways," but not "fixed" or "standard stairs," and also includes requirements similar to OSHA's for "fixed industrial stairs." The consensus standard ANSI A1264.1–2007 uses the term "fixed stairs." The Agency requests comment on whether this change in terminology (from fixed industrial stairs to standard stairs) is appropriate or whether it leaves a gap in the coverage of stairways.

Proposed paragraph (a)(1) establishes the scope of this section, making it clear that generally all stairs, including standard stairs, spiral stairs, ship stairs, and alternating tread-type stairs, are covered. Additional requirements for stairs serving as required exit routes are located in subpart E, Means of Egress. This provision is based on existing paragraph § 1910.24(a) and is consistent with ANSI A1264.1–2007. It also makes clear that this section does *not* cover stairs serving floating roof tanks, stairs on scaffolds, stairs designed into a machine or piece of equipment, or stairs on self-propelled motorized mobile equipment. To ensure consistency among OSHA standards and assist those working in both construction and general industries, requirements for stairs on scaffolds also are provided in the construction industry standards at § 1926.451. Stairs serving floating roof tanks, stairs designed into a machine or piece of equipment, and stairs on self-propelled motorized mobile equipment are not covered by recognized industry standards, and the Agency does not have any information or sufficient evidence on how to regulate these types of stairs. OSHA requests comments on whether there is a need to regulate these stairs.

Proposed paragraph (a)(2) is intended to protect employees from falling off unprotected sides and edges. It requires that stairs be equipped with handrails and stair rail systems that meet the requirements of proposed § 1910.28, Duty to have fall protection. OSHA notes that the top rail of a stair rail system may also serve as a handrail when installed in accordance with proposed § 1910.29(f).

Paragraph (a)(3) proposes that the vertical clearance above any stair tread to an overhead obstruction must be at least 6 feet, 8 inches (1.8 m) measured from the leading edge of the tread, except as proposed in (c)(3) below. This is a change from the existing rule, found in § 1910.24(i), where the clearance is required to be at least 7 feet (2.1 m). This proposed change is consistent with national consensus standards (i.e., ANSI A1264.1–2007).

In paragraphs (a)(4) through (a)(6), OSHA proposes requirements for riser heights and stairway landing platform widths. All three provisions are based on requirements in existing subpart D but are rewritten in performance-based language for ease of compliance and enforcement. These proposed requirements are the minimum criteria OSHA feels are necessary to ensure employee safety when traversing stairs.

In paragraph (a)(4), OSHA proposes that stairs be installed with uniform riser heights and tread depths between landings. This provision is essentially the same as the existing requirement in § 1910.24(f).

OSHA proposes, in § 1910.25(a)(5), that stairway landings and platforms be no less than the width of the stair and not less than 30 inches (76 cm) in length as measured in the direction of travel. The proposed language is essentially the same as that in existing § 1910.24(g).

In paragraph (a)(6), OSHA proposes to revise the platform width requirements where doors or gates open directly on a stairway. Specifically, OSHA proposes that when a door or a gate opens directly on a stairway, a platform must be provided, and the swing of the door or gate must not reduce the effective usable depth to less than 20 inches (51 cm) for platforms installed before 90 days after the effective date of the final rule; and 22 inches (56 cm) for platforms installed thereafter. The 20 or 22 inches (51 or 56 cm) is measured beyond the swing radius of the door after the door is opened fully. (*See* Figure D–7.) This change increases the effective usable depth of the platform, required in existing § 1910.23(a)(10), by 2 inches (5 cm), making OSHA's proposal consistent with the national consensus standard, ANSI A1264.1–1995 (R2002). OSHA notes that the 2007 version of ANSI/ASSE A1264.1, section 6.11, *Door and Gate Openings,* states, "Stairs shall have landings at door openings and gate openings. During its swing, the door shall leave not less than one-half of the required width of the landing unobstructed. The door shall project not more than seven inches (180 mm) into the required width of the landing when the door is fully open." OSHA requests comment on how much clear, unobstructed space is necessary on landing platforms where doors or gates open directly onto them.

In paragraph (a)(7), OSHA proposes that stairs be designed and constructed to carry five times the normal anticipated live load, but never less than a concentrated load of 1,000 pounds (454 kg) applied at any point. This provision is nearly the same as existing § 1910.24(c), which applies to fixed industrial stairs, except that the proposed provision will apply to *all* stairs covered by this section. In addition, it is consistent with ANSI/ASSE A1264.1–2007.

In paragraph (a)(8), OSHA proposes that standard stairs be provided for access from one walking-working surface to another where operations necessitate regular and routine travel between levels and for access to operating platforms for equipment. An exception allows the use of winding stairways on tanks and similar round structures where the diameter of the structure is five (5) feet (1.5 m) or more. OSHA recognizes that standard stairs are the principal means of providing safe access from one working level to another. Therefore, this provision is designed to ensure that employees have a reasonable means of access to different walking-working surfaces. This provision is essentially the same as the existing requirement in § 1910.24(b) except that it has been rewritten for clarity. OSHA does not intend for this section to preclude the use of fixed ladders for access to elevated tanks, towers, and similar structures, or to overhead traveling cranes, when the use of fixed ladders is common practice. The proposed provision is consistent with the national consensus standard, ANSI/ASSE A1264.1–2007.

In paragraph (a)(9), OSHA proposes to limit the use of spiral stairs, ship stairs, or alternating tread-type stairs to "special limited usage" and "secondary access" situations when the employer demonstrates that it is not practical to provide a standard stairway. This is consistent with the national consensus standard, ANSI/ASSE A1264.1–2007. ANSI does not define "special limited usage" or "secondary access." The ICC Building Code, however, refers to "special limited use" as "a space not more than 250 square feet (23 m^2) in area and serving not more than five occupants, or from galleries, catwalks and gridirons. * * *" The proposal would require employers to demonstrate that it is not practical to provide a standard stairway before using an alternate type of stairway in "special limited use" situations; therefore, it may be helpful to employers if OSHA defines special limited usage. For the purpose of this proposed rule, OSHA's use of the term is the same as the ICC's; however there may be other usages that warrant inclusion. OSHA requests comment on these points. The term "secondary access" is self explanatory and refers to any stairway that is not used as a

primary means of egress. OSHA notes that where spiral stairs, ship stairs, or alternating tread-type stairs are permitted, those stairs must meet the general requirements in proposed § 1910.25(a) and the additional specific requirements for each stair type in paragraphs (c), (d), or (e) of proposed § 1910.25, respectively. Proposed paragraphs (c), (d), and (e) for spiral stairways, ship stairs, and alternating-type stairs respectively, are new and have no counterparts in existing § 1910.24.

Paragraph (b) Standard Stairs

In paragraph (b), OSHA proposes specific requirements for standard stairs. The proposed requirements are the minimum criteria OSHA believes are necessary to allow adequate clearance for employees to negotiate standard stairs safely. These requirements apply in addition to the general requirements in proposed paragraph (a) above. All of the proposed requirements in this paragraph are consistent with the national consensus standard, ANSI/ASSE A1264.1–2007. For compliance assistance, OSHA has included figures D–7 through D–10 in the regulatory language.

Paragraph (b)(1) proposes that standard stairs be installed at angles between 30 and 50 degrees from the horizontal, which is equivalent to existing § 1910.24(e). However, the existing rule allows any combination of riser height and tread depth necessary to achieve the 30 to 50 degree angle, whereas the proposed rule sets a maximum and minimum range, respectively. Proposed paragraphs (b)(2) and (b)(3) set the maximum riser height and the minimum tread depth, allowing an exception when open risers are used. In paragraph (b)(2), OSHA proposes that standard stairs have a maximum riser height of 9.5 inches (24 cm). In paragraph (b)(3), OSHA proposes that standard stairs have a minimum tread depth of 9.5 inches (24 cm) except when open risers are used; that is, standard stairs having open risers can have tread depths of less than 9.5 inches (24 cm). Proposed paragraph (b)(3) differs from the existing rule in that it uses the term "tread depth" instead of "tread run." OSHA believes that stairs currently used in general industry already meet these requirements.

In paragraph (b)(4), OSHA proposes that standard stairs have a minimum width of 22 inches (56 cm) between vertical barriers (such as a stair rail, guardrail, or wall). This requirement is essentially the same as existing § 1910.24(d).

The proposed criteria for spiral stairs, ship stairs, and alternating tread-type stairs presented below in proposed paragraphs (c), (d), and (e), respectively, parallel the provisions provided for standard stairs. They represent the minimum requirements OSHA believes are necessary for employees to traverse spiral stairs, ship stairs, and alternating tread-type stairs safely.

Paragraph (c) Spiral Stairs

In paragraph (c), OSHA proposes specific requirements for spiral stairs. These requirements apply in addition to the general requirements in proposed paragraph (a) above. These provisions are based on NFPA 101–2006.

Proposed paragraph (c)(1) requires that spiral stairways have a clear width not less than 26 inches (66 cm). Proposed paragraph (c)(2) requires spiral stairways to have risers with a maximum height of 9.5 inches (24 cm). In paragraph (c)(3), OSHA proposes that spiral stairs have a minimum amount of headroom above the spiral stairway of 6 feet, 6 inches (2 m) measured vertically from the center of the leading edge of the tread. To maintain a safe tread depth and size for spiral stairs, OSHA proposes in paragraph (c)(4) that spiral stair treads have a minimum depth of 7.5 inches (19 cm) at a point 12 inches (30 cm) from the narrowest edge. Proposed paragraph (c)(5) requires that spiral stairs have uniform size treads.

Paragraph (d) Ship Stairs

In paragraph (d), OSHA proposes specific requirements for ship stairs. These requirements apply in addition to the general requirements in proposed paragraph (a) above. Proposed paragraph (d)(1) requires that ship stairs be installed at a slope of 50 to 70 degrees from the horizontal. Paragraph (d)(2) proposes that ship stairs have open risers. In paragraph (d)(3), OSHA proposes that ship stairs have treads with a minimum depth of 4 inches (10 cm), a minimum width of 18 inches (46 cm), and a vertical rise between tread surfaces in the range of 6.5 to 12 inches (17 to 30 cm). These provisions are based on the national consensus standard, ANSI A1264.1–2007.

Paragraph (e) Alternating Tread-Type Stairs

In proposed paragraph (e), OSHA proposes specific requirements for alternating tread-type stairs. These requirements apply in addition to the general requirements in proposed paragraph (a) above. Proposed paragraph (e)(1) requires that alternating tread-type stairs be installed at a slope between 50 and 70 degrees from the horizontal. Proposed paragraph (e)(2) requires that the distance between handrails be between 20 and 24 inches (51 to 61 cm). Proposed paragraph (e)(3) requires that the stairs have treads with a minimum depth of 8.5 inches (22 cm). Proposed paragraph (e)(4) requires that alternating tread-type stairs have open risers if the depth is less than 9.5 inches (24 cm), and proposed paragraph (e)(5) requires treads that are a minimum of 7 inches (18 cm) wide at the leading edge of the step (nosing). The proposed requirements of this paragraph are based on ANSI A1264.1–2007, NFPA 101–2006, and the 2003 International Building Code.

Section 1910.26 Dockboards (Bridge Plates)

Proposed § 1910.26 establishes requirements for dockboards (bridge plates). This section relocates, updates, and clarifies requirements for dockboards located in existing § 1910.30, Other working surfaces. In addition, two requirements in existing § 1910.30(b) and (c), Forging machine and Veneer machinery, respectively, would be revoked because the hazards addressed in those provisions are already covered elsewhere in proposed subpart D (*e.g.,* § 1910.22) or in other subparts in the general industry standards (e.g., subpart O, Machinery and Machine Guarding, and in particular § 1910.218, Forging machines).

In paragraph (a), OSHA proposes that portable and powered dockboards be capable of supporting their maximum intended load. This requirement essentially restates the general requirement for load support in proposed § 1910.22(b) for all walking-working surfaces, and it is essentially the same as existing provision § 1910.30(a)(1).

In paragraph (b), OSHA proposes that dockboards put into service at least 90 days after the effective date of the final rule be designed, constructed, and maintained to prevent equipment (such as hand trucks and vehicles) from running off the edge. This performance language provision requires that where equipment is used on dockboards, the dockboard must be provided with a means, such as edging or curbing, to prevent equipment from running off the edge. This is a new requirement, which is being proposed to protect employees from injury in the event the equipment falls off the edge of the dockboard.

OSHA proposes in paragraph (c) that portable dockboards be secured in position, either by being anchored or equipped with devices that will prevent their slipping. Where this is infeasible,

the employer must ensure there is substantial contact between the portable dockboard and the unattached surface or surfaces. The dockboard and the unattached surface or surfaces should overlap with one another so that the dockboard does not rock, slide, or slip while being used by employees. The provision is essentially the same as existing provision § 1910.30(a)(2) and is based on ANSI/ASME B56.1–2000, Safety Standard for Low Lift and High Lift Trucks (sections 4.13.2 and 4.13.5).

In paragraph (d), OSHA proposes that vehicles onto which a dockboard has been placed must be prevented from moving (*e.g.,* by using wheel chocks) while the dockboard is being used by employees. If a vehicle rolls forward when a dockboard is in use, the dockboard may fall off the end of the vehicle and an employee may fall as well. The provision identifies positive steps to prevent movement of vehicles rolling forward away from the dock and is essentially the same as the existing § 1910.30(a)(5). The paragraph is consistent with ANSI MH30.2–2005, Portable Dock Leveling Devices: Safety, Performance and Testing.

OSHA proposes in paragraph (e) that portable dockboards be equipped with handholds or other means to permit safe handling. The provision is essentially the same as existing § 1910.30(a)(4) and is based on ANSI/ASME B56.1–2000, Safety Standard for Low Lift and High Lift Trucks (section 4.13.3).

Section 1910.27 Scaffolds (Including Rope Descent Systems)

In § 1910.27, OSHA is proposing significant revisions to the existing general industry scaffold standards. First, OSHA is proposing to remove all the existing scaffolding requirements now located at § 1910.28 and § 1910.29, with the exception of mobile ladder stand requirements in existing § 1910.28(f). Instead, in paragraph (a), it is proposing to require that employers comply with the construction industry standards in § 1926 subpart L, Scaffolds. Requirements for mobile ladder stands are relocated to proposed § 1910.23(e). Second, in paragraph (b) OSHA is proposing to add new requirements for rope descent systems (sometimes called controlled descent systems)—a type of scaffold not now regulated by either OSHA's general industry or construction industry standards.

Paragraph (a) Scaffolds

The primary reason for the proposed changes is to ensure consistency among OSHA standards for scaffolds. The construction industry scaffold standards (subpart L of 29 CFR part 1926) were updated on August 30, 1996 (61 FR 46026), and contain requirements for the same types of scaffolds that are now regulated by the general industry standards. Rather than updating the part 1910 standard to harmonize with the part 1926 standard, OSHA concluded that a better way to ease compliance and ensure regulatory consistency, both now and in the future, is to refer general industry employers to the construction industry standards. OSHA believes that this will ensure consistency in worker protection in both industries, increase understanding of the rules, and reduce any confusion that might occur when employers are subject to two sets of rules for scaffolds—one that applies when general industry work (such as maintenance) is being done and another when construction work is being done. In addition, OSHA believes that many general industry employers who use scaffolds also perform work covered by the construction industry standards and are, therefore, already familiar, and in compliance, with the construction industry scaffold standards. OSHA believes that using just one set of regulations will simplify both compliance and enforcement of the scaffold standards and result in greater employee protection. OSHA notes that all 21 types of scaffolds currently regulated by the general industry standards are also regulated by the construction industry standards.

The following table lists the different types of scaffolding addressed in the existing part 1910 general industry standards, and the corresponding paragraphs in part 1926 construction industry standards.

LIST OF COMPARABLE SCAFFOLDING STANDARDS IN EXISTING PARTS 1910 AND 1926

Existing 1910		Existing 1926 Subpart L	
.28 (b)	Wood pole scaffolds	.452 (a)	Pole scaffolds.
.28 (c)	Tube and coupler scaffolds	.452 (b)	Tube and coupler scaffolds.
.28 (d)	Tubular welded frame scaffolds	.452 (c)	Fabricated frame (tubular welded) scaffolds.
.28 (e)	Outrigger scaffolds	.452 (i)	Outrigger scaffolds.
.28 (g)	Two-point suspension scaffolds	.452 (p)	Two-point adjustable suspension scaffolds.
.28 (h)	Stone setter's adjustable multipoint suspension scaffolds.	.452 (q)	Multi-point adjustable suspension scaffolds, stone setters' multi-point adjustable suspension scaffolds, and masons' multi-point adjustable suspension scaffolds.
.28 (f)	Masons' adjustable multi-point suspension scaffolds.		
.28 (i)	Single-point adjustable suspension scaffolds	.452 (o)	Single-point adjustable suspension scaffolds.
.28 (j)	Boatswain's chair.		
.28 (k)	Carpenters' bracket scaffolds	.452 (g)	Form scaffolds and carpenters' bracket scaffolds.
.28 (l)	Bricklayers' square scaffolds	.452 (e)	Bricklayers' square scaffolds.
.28 (m)	Horse scaffolds	.452 (f)	Horse scaffolds.
.28 (n)	Needle beam scaffolds	.452 (u)	Needle beam scaffolds.
.28 (o)	Plasterers', decorators', and large area scaffolds	.452 (d)	Plasterers', decorators', and large area scaffolds.
.28 (p)	Interior hung scaffolds	.452 (t)	Interior hung scaffolds.
.28 (q)	Ladder jack scaffolds	.452 (k)	Ladder jack scaffolds.
.28 (r)	Window-jack scaffolds	.452 (l)	Window-jack scaffolds.
.28 (s)	Roofing bracket scaffolds	.452 (h)	Roof bracket scaffolds.
.28 (t)	Crawling boards or chicken ladders	.452 (m)	Crawling boards (chicken ladders).
.28 (u)	Float or ship scaffolds	.452 (s)	Float (ship) scaffolds.
.29 (e)	Mobile work platforms	.452 (w)	Mobile scaffolds.

OSHA is aware that by requiring general industry employers to comply with the construction industry scaffold requirements, some employers may encounter new requirements. However, the Agency anticipates there will be minimal new compliance burdens or new costs associated with requiring compliance with the construction industry rules. The Agency believes that any requirements in the construction industry scaffold standard that would be "new" to general industry employers are requirements that only apply when construction work is being done. For example, § 1926.451(g)(2) requires, under certain conditions, that employees be protected from falls while erecting and dismantling supported scaffolds. There is no similar requirement in the existing general industry scaffold standard. However, OSHA believes that most work performed from supported scaffolds is construction work that is already subject to the § 1926.451(g)(2) requirement.

OSHA requests comment on its position as discussed here. Is there general industry work—maintenance work, for example—performed while working from supported scaffolds that would cause employers to be subjected to a new rule? Are there other requirements in the construction industry rule that would impose new obligations on general industry employers because of OSHA's proposed action to require employers to comply with the construction scaffold rule? If so, what are those requirements and how would general industry employers be impacted?

Paragraph (b) Rope descent systems (RDS).

Rope descent systems (RDS), newly covered in proposed paragraph (b), are suspension-type devices that support one employee in a chair (seat board) and allow the user to descend in a controlled manner, stopping at desired points during the descent. RDS are a variation of single-point adjustable suspension scaffolds, but operate only in a descending direction. The use of rope descent systems is prevalent in the United States, frequently used in building cleaning, maintenance, and inspection. RDS are also known as "controlled descent devices" (CDD), and have been referred to as such in previous **Federal Register** notices (*see* example in following paragraph). To reduce confusion, in this notice OSHA will only use the term RDS.

In the July 18, 1990, **Federal Register,** OSHA solicited comments on regulating the use of RDS (CDD). On May 2, 2003, OSHA again raised the issue (68 FR 23534):

> In a March 12, 1991, memorandum to its Regional Administrators, OSHA stated that employers who use CDD to perform building cleaning, inspection, and maintenance must do so in accordance with the manufacturer's instructions, warnings, and design limitations. In addition, OSHA said it expected employers using CDD to implement eight specific safety provisions covering the following areas: employee training, inspection of equipment, proper rigging, separate fall arrest systems, installation of lines, rescue, prevention of rope damage, and stabilization (Docket S–029; Ex. 1–16–3). These eight provisions also are included in the current national consensus standard, ANSI I–14.1–2001—Window Cleaning Safety (Docket S–029; Ex. 1–13). The ANSI standard also limits the use of CDD, which it refers to as rope descent systems (RDS) to window cleaning operations performed 300 feet (91 m) or less above grade, unless the windows cannot be safely and practicably accessed by other means such as powered platforms.

The inclusion of these eight provisions in the ANSI standard on window cleaning indicates industry acceptance of these specific safety precautions. Comments to the earlier rulemaking record, both written and in public hearings, indicate that there are basically two view points on the RDS issue—either strongly in support of their use or strongly opposed to their use.

The supporting comments noted that RDS are a vital piece of equipment for the window cleaning industry (along with powered platforms, ladders, and other devices). Comments were made that, in some instances, such as certain multi-level roofs, saw-tooth roof edges, and buildings without parapets, RDS were the safest equipment to use (Ex. OSHA–S041–2006–0666–1253, p. 489).

Mr. Steve Powers, an owner/operator of a high-rise window cleaning company testified:

> [T]he only solution to reducing the number of injuries and fatalities is in proper training, not in banning or restricting equipment. Human error and the lack of proper training is the primary cause of injuries and fatalities in our industry, not the equipment (Tr. 685).

The opposing commenters discussed the advantages of powered platforms over RDS. A window cleaning company owner expressed the belief that most window cleaners in this country do not have the proper training to use RDS in a safe manner (Ex. OSHA–S041–2006–0666–1254, p. 997). Many members of the Service Employees International Union (SEIU) also opposed the use of RDS (*e.g.,* Ex. OSHA–S029–2006–0662–0277 through Ex. OSHA–S029–2006–0662–0284).

Since issuing its policy on the use of RDS over 19 years ago, OSHA is not aware of any fatalities involving RDS when all eight of the safety provisions outlined in the March 12, 1991, memorandum have been followed. Therefore, at this time, OSHA believes that RDS may address a need and can be used safely so long as proper procedures are followed. Due to the design of some structures, the use of RDS may be the only way to perform some maintenance work and, if RDS is the only feasible method, OSHA believes that requirements are essential to protect employees while they are using this equipment.

To have the most complete information on RDS incidents, OSHA requests comment on incidents, including fatalities, injuries, and near misses, that have occurred while using this equipment. Additionally, OSHA requests information regarding any other provisions that should be included in the final rule to increase worker safety, including whether or not RDS should be prohibited or should be allowed only when the employer can demonstrate that other methods, such as powered platforms, are not feasible or pose additional safety risks. Please include comment on how such feasibility and safety risk determinations could be made, as well as applicable rationale, costs, and benefits for all comments on RDS.

The specific requirements in this proposed rule are based on the eight provisions of OSHA's 1991 memorandum and the national consensus standard, IWCA I–14.1–2001. These provisions are described in the following paragraphs. Additionally, although some provisions of this section are essentially the same as provisions in proposed subpart I, OSHA believes it is appropriate for the provisions to be presented here, in proposed subpart D, as a complete unit for ease of compliance and enforcement.

Proposed paragraph (b)(1) prohibits the use of RDS at heights greater than 300 feet (91.4 m) above grade unless the employer can demonstrate that access cannot otherwise be attained safely and practicably. Therefore, RDS would be permitted at heights of 300 feet (91.4 m) or less.

While the March 12, 1991, memorandum did not include a 300-foot limitation, the national consensus standard, IWCA I–14.1–2001 (section 5.7.12), prescribes the limitation. OSHA uses IWCA I–14 (section 5.7.11) as the basis for this prohibition, noting that the greater the length of rope used for a descent, the greater the adverse effects of environmental factors such as wind gusts, microbursts, or tunneling wind currents; these effects increase the risk

of injury to employees. For this reason, OSHA believes it is appropriate to propose this prohibition.

Proposed paragraph (b)(2) establishes eleven requirements employers must meet when RDS are used. Proposed paragraph (b)(2)(i) requires RDS to be used in accordance with the instructions, warnings, and design limitations set by manufacturers and distributors. Equipment is to be used only as the manufacturer designed it to be used. For instance, ropes and equipment that are designed and sold for recreational climbing are not always rated for industrial use. OSHA is aware that some elements of one manufacturer's system may be compatible with elements of a different manufacturer's system; however, incompatibility of systems can be disastrous. OSHA requests comment on whether changing the provision to read "set by manufacturers or qualified persons" (using the word "qualified" as defined in proposed § 1910.21) would be more appropriate.

Proposed paragraph (b)(2)(ii) requires employee training in accordance with proposed § 1910.30. OSHA believes that RDS can be safely used only if employees are thoroughly knowledgeable in the equipment and its proper use. Please *see* the training discussion below.

Proposed paragraph (b)(2)(iii) requires daily inspection of all equipment used in RDS before use. Also, any damaged equipment must be removed from service. This inspection enables changes and defects (such as abrasions and cracks) that occurred during the last use or during storage to be discovered, and appropriate action taken. This provision is reflected in a similar requirement in proposed § 1910.140, Personal fall arrest systems.

Proposed paragraph (b)(2)(iv) requires proper rigging, including sound anchorages and tiebacks, with particular emphasis on providing tiebacks when counterweights, cornice hooks, or similar non-permanent anchorages are used. Sound anchorage and tiebacks are essential to the safety of RDS. Emphasis is placed upon non-permanent anchorages because of the increased possibility of damage during transport and improper installation. The Agency requests comment on whether this provision is sufficient to ensure the safety of anchorages, and whether OSHA should include any specific requirements for anchorages beyond those presented here.

Proposed paragraph (b)(2)(v) requires a separate, independent personal fall arrest system meeting the requirements of subpart I of this part to be used so that any failure in a friction device, support seat, support line, or anchorage system will not affect the ability of the fall arrest system to operate and quickly stop the employee's fall. This requirement is consistent with existing § 1910.66(j) and § 1926.451(g), and is reflected in proposed § 1910.140.

Proposed paragraph (b)(2)(vi) requires that all lines be capable of sustaining a minimum tensile load of 5,000 pounds (2,268 kg). This requirement does not preclude the use of a knot, swage, or eye splice that reduces the tensile strength of a rope, but it does require that when such a knot, swage, or splice is used, the rope must have a resulting strength capable of supporting a minimum tensile load of 5,000 pounds (2,268 kg). This provision is the same as a requirement in proposed § 1910.140, Personal fall arrest systems.

Proposed paragraph (b)(2)(vii) requires the employer to provide for prompt rescue of employees in the event of a fall. This provision is the same as a requirement in proposed § 1910.140.

Proposed paragraph (b)(2)(viii) requires ropes to be effectively padded when they contact edges of the building, anchorage, obstructions, or other surfaces that might cut or weaken the rope. Padding protects ropes from abrasions that can weaken the tensile strength of a rope.

Proposed paragraph (b)(2)(ix) requires stabilization at employee work locations when descents are greater than 130 feet (39.6 m). As required in ANSI/IWCA I–14 (section 5.7.12), stabilization at the specific work station reduces risks imposed by sway. The Agency requests information on stabilization methods commonly used, and other stabilization methods not commonly used that may increase employee safety. Please include information regarding costs and benefits of these methods.

The greater the length of rope used for a descent, the greater the adverse effects of environmental factors such as wind gusts, microbursts, or tunneling wind currents; these effects increase the risk of injury to employees. OSHA requests information on the use of RDS during inclement weather. Should the use of RDS be prohibited in certain weather conditions? If so, what are those conditions? How should an employer determine whether the conditions are severe enough to prevent the use of RDS? The term "excessive winds" as used in the consensus standard is subjective and open to differing interpretations. How should the term be defined? Is a specific wind speed appropriate? What speed and why? Should wind speed be monitored, and if so, how?

Proposed paragraph (b)(2)(x) requires equipment, including tools, squeegees, and buckets, to be secured to prevent equipment from falling, thus protecting any workers below from being struck by falling equipment. This provision is based on IWCA I–14.1–2001, which is written for the protection of the general public. However, OSHA believes this provision also is necessary to protect employees working below RDS from injuries resulting from dropped equipment.

Proposed paragraph (b)(2)(xi) requires suspension ropes to be protected from exposure to open flames, hot work, corrosive chemicals, or other destructive conditions that can weaken them. This requirement is essentially the same as existing § 1910.28(a)(21).

Section 1910.28 Duty To Have Fall Protection

This is the first of three new sections in subpart D that consolidate requirements pertinent to fall protection. The new sections (§§ 1910.28, 1910.29, and 1910.30), when viewed together, represent a comprehensive approach to managing fall hazards. OSHA believes this revised approach will ensure a better understanding of employer obligations; provide flexibility for employers when choosing a fall protection system that works best for them; and most importantly, will significantly reduce the number of falls in general industry.

Proposed § 1910.28 specifies the areas and operations where fall protection systems are required. The criteria to be met for fall protection systems and the training necessary to use the systems properly are covered in proposed §§ 1910.29 and 1910.30, respectively. In addition, criteria to be met when *personal* fall protection systems are used are covered in subpart I of this part at § 1910.140. New § 1910.28 is patterned after § 1926.501, Duty to have fall protection, of the construction industry standards and contains many similar requirements. As indicated in proposed § 1910.21, Scope and application, OSHA intends that this new section will consolidate most general industry fall protection requirements. There are, however, some exceptions. OSHA is not proposing to relocate the existing "duty to have fall protection" requirements in § 1910.66 (for powered platforms), § 1910.67 (for aerial lifts), § 1910.268 (for telecommunications operations), or § 1910.269 (electric power generation, distribution and transmission operations). In addition, nothing in this section applies to fall hazards from the perimeter of entertainment stages or rail

(subway) station platforms. In these contexts, the use of guardrails or other fall protection systems could unreasonably interfere with work operations or would create a greater hazard than would otherwise be present. OSHA recognizes that there may be limited circumstances where fall protection may be feasible in these occupational settings, and encourages the use of fall protection when possible.

The duty to have fall protection in general industry is not new. Existing subpart D already requires employees to be protected from falls and, in general, requires that protection be provided whenever an employee is exposed to falling 4 feet (1.2 m) or more to a lower level. The origin of the 4-foot rule in subpart D is the American National Standard, ANSI A12.1–1967, Safety Requirements for Floor and Wall Openings, Railings, and Toe Boards. Historical records indicate that, generally, the 4-foot rule was prescribed in consensus standards as far back as 1932 (*see* ANSI A12.1–1932). Therefore, it is reasonable to conclude that providing fall protection when employees are exposed to falls of 4 feet (1.2 m) or more has been the accepted practice in general industry for more than 75 years.

Furthermore, a 1978 University of Michigan study (*An Ergonomic Basis for Recommendations Pertaining to Specific Sections of OSHA Standard 29 CFR Part 1910, Subpart D-Walking and Working Surfaces,* Ex. OSHA–S041–2006–0666–0004) supports maintaining the 4-foot rule. For these reasons, OSHA believes it would be unreasonable to change this trigger height. The Agency requests more recent studies or information that support or contradict this position.

OSHA notes that its construction industry rules require, except for certain specific work or operations, that employees be protected whenever the fall distance is 6 feet (1.8 m) or more to lower levels. Comments to OSHA's 2003 Reopening Notice indicated that some members of the public believed that the trigger height for providing fall protection in general industry is 6 feet (1.8 m), which is the construction industry trigger. OSHA wishes to be clear on this point: for general industry, the trigger height for providing fall protection has—for more than 75 years—been 4 feet (1.2 m). Exceptional trigger heights have been established for construction, work performed on scaffolds or fixed ladders, or utility work. Throughout its entire history, OSHA has consistently reinforced the policy in public statements, as well as in documents issued to clarify and interpret the standard. For example, as far back as 1978, OSHA, in a letter of interpretation to Mr. John Reilly (*http://www.osha.gov/pls/oshaweb/owadisp.show_document?p_table=INTERPRETATIONS&p_id=18715*) restated the requirement for fall protection for open-sided surfaces more than 4 feet above adjacent levels.

A major difference between the proposed requirements in § 1910.28, and the existing requirements of subpart D, is that under the proposed rule, employers will be able to choose from several options in providing fall protection. The existing rule, for the most part, mandates the use of guardrail systems (*see, e.g.,* § 1910.23), thereby limiting the employer's ability to choose the system that works best for the particular situation or work activity. The proposed rule allows employers to choose from several options in providing fall protection. These include conventional fall protection systems such as guardrail systems, safety net systems, and personal fall protection systems (travel restraint systems, fall arrest systems, and positioning systems), and non-conventional means. An example of non-conventional means would be the establishment of a designated area in which an employee is to work. An employee working in a designated area must be trained in safe work practices specific to that area and must be required to use those safe work practices. OSHA believes that an important key to protecting employees is allowing employers flexibility to select the fall protection systems or methods that will work best for the particular work activities or operations, thereby allowing employers to consider factors such as exposure time, availability of attachment points, and feasibility and cost constraints.

OSHA believes that the reorganized format presented here will reduce confusion about fall protection requirements, as well as reduce the need for interpretations of those requirements. As noted above, by patterning this section after the construction industry standards, OSHA intends to ensure that employees in both industries, when exposed to similar fall hazards, are afforded similar protection. The proposed subpart D fall protection requirements also reflect today's technology and recognize the use of innovative fall protection measures, such as working in designated areas or using travel restraint systems, as reasonable and appropriate ways to protect employees from fall hazards. Once an employer has chosen a system or method from the options allowed in proposed § 1910.28, that system/method would have to meet the requirements in proposed § 1910.29, and employees would have to be trained on the use of the chosen system per proposed § 1910.30. OSHA believes the proposed fall protection requirements will allow for a much higher level of compliance, leading to a higher level of protection and may, at the same time, reduce employer costs.

Paragraph (a) General

Proposed paragraph (a) of § 1910.28 contains two general requirements relating to an employer's obligation, or duty, to have fall protection. In proposed paragraph (a)(1), OSHA establishes the employer's obligation to provide fall protection and clarifies that all fall protection systems used must conform to the criteria and work practices set forth in proposed § 1910.29, except that, when personal fall protection systems are used, compliance with the criteria and work practices of proposed § 1910.140 in subpart I would be required. Proposed § 1910.28 does not apply to powered platforms because the duty to have fall protection is already provided in § 1910.66, the general industry standard for powered platforms. Proposed § 1910.28 also does not apply to aerial lifts (§ 1910.67), telecommunications (§ 1910.268), or electric power generation, transmission, and distribution (§ 1910.269) because each of these sections, like § 1910.66, already contains a requirement specifying the employer's duty to have fall protection. OSHA notes that most of the requirements in this proposed section allow several choices for providing fall protection, but some requirements limit the choices. For example, only the use of guardrail and handrail systems is permitted to protect employees on dockboards (bridge plates). Here, OSHA believes these systems offer the appropriate type of fall protection.

As stated above, existing subpart D requires employers to provide guardrails as the primary method of protecting employees from fall hazards (for example, *see* proposed § 1910.23(c)). The 1990 proposed revision of subpart D (55 FR 13401) continued the concept of using guardrails as the primary fall protection method, allowing other alternatives in limited situations. Thus, the subpart D proposal established a hierarchy of controls. However, in the 2003 Reopening Notice (68 FR 23533), OSHA acknowledged that it may not always be feasible to provide guardrails and raised this as an issue. Issue #4, Hierarchy of Fall Protection Controls, elicited comment on whether OSHA should permit employers to provide

other fall protection systems such as personal fall arrest systems, positioning systems, or restraint systems to protect employees from falls. In raising the issue, OSHA noted that the final Fall Protection rule for the construction industry did not have a hierarchy of fall protection systems. Instead, that standard included a list of options which employers would be permitted to follow (59 FR 40672, August 9, 1994). In the 2003 reopening, OSHA said that, to achieve consistency between OSHA's construction standards and general industry standards, it could abandon the hierarchy of fall protection controls that had been proposed in 1990 in favor of a more flexible approach (68 FR 23533).

Comments on Issue #4 overwhelmingly favored removal of the hierarchy and promulgation of rules consistent with those already established for the construction industry. Today's proposal reflects those comments and removes the hierarchy in favor of provisions establishing several fall protection systems that offer equivalent protections, and allows employers flexibility to select among them. It is OSHA's belief that the alternatives (or options) listed for each work activity operation will allow employers to choose the system that they determine is most appropriate and cost effective. OSHA has limited the employer's choices to those systems that it believes will provide an appropriate and equal level of safety.

In an earlier **Federal Register** (59 FR 40680) document, OSHA discussed its position that all employers are responsible for obtaining information about the workplace hazards to which their employees may be exposed and for taking appropriate action to protect affected employees from any such hazards. OSHA also noted that "[t]he [Occupational Safety and Health Review] Commission has held that an employer must make a reasonable effort to anticipate particular hazards to which its employees may be exposed in the course of their scheduled work." (*Id.* 40680.) Specifically, an employer must inspect the area to determine what hazards exist or may arise during the work before permitting employees to work in that area, and the employer must then give specific and appropriate instructions to prevent exposure to unsafe conditions. This is particularly important when employees are allowed to work in a "designated area" and are not protected by conventional fall protection systems.

Additionally, when general industry employers contract with others to provide work at their site, OSHA expects both the host employer and contract employer to work together to identify and address fall hazards. One method of accomplishing this is to conduct a hazard assessment following the guidelines in Appendix B to subpart I of part 1910, Non-Mandatory Compliance Guidelines for Hazard Assessment and Personal Protective Equipment Selection. Another resource is consensus standards. ANSI/ASSE Z359.2–2007, Minimum Requirements for a Comprehensive Managed Fall Protection Program, provides procedures for eliminating and controlling fall hazards. OSHA, of course, encourages employers to go beyond its minimum requirements and to take additional measures to address fall hazards in a comprehensive manner, starting with a discussion about the elimination of fall hazards and ending with a plan to rescue employees if they fall.

In this proposed rule, OSHA requires employers to protect employees performing work from fall hazards, and sets criteria for the proper implementation of fall protection through the requirements in subparts D and I, specifically in the requirements at §§ 1910.28–1910.30 and § 1910.140.

In paragraph (a)(2), OSHA proposes to require that employers ensure that any walking-working surface on which they allow employees to work has the strength and structural integrity to support employees safely. OSHA is proposing to add this new requirement, which is identical to § 1926.501(a)(2) of the construction fall protection standard, to ensure that the surfaces can support the weight of employees, equipment, and materials. OSHA's intent is that a simple inspection of the work surface be made before work begins. If conditions warrant, a more involved inspection will be necessary to ensure the surface is safe for employees. OSHA is aware of incidents when employees have fallen through floors or roofs because they were not inspected before the work began to ensure that the surfaces would support the loads imposed (employees, equipment, and material). OSHA believes this is particularly true when employees are doing maintenance and servicing work of equipment on roofs, platforms, and runways. The hazards addressed by the proposed provision are similar to the hazards addressed in proposed § 1910.22, a revision of existing § 1910.22(d), which is concerned with ensuring employees work on surfaces that can support them so they will not fall onto or through the walking-working surface. The provision in proposed § 1910.28(a)(2), while similar to proposed § 1910.22(a) (which requires that surfaces be designed, constructed, and maintained free of hazards), is intended to focus the attention of the employer on the need to inspect work surfaces (especially non-routine work surfaces) before employees are required to walk or work on them. It is noted that while some surfaces are not specifically designed as a walking or working surface, employees walk on or work from them from time to time. OSHA believes that this approach is consistent with the approach described in the preamble to the construction rule (59 FR 40681).

Paragraph (b) Protection From Fall Hazards

Proposed paragraph (b) contains 13 requirements that set forth the options from which employers may choose to protect employees exposed to fall hazards when on a walking-working surface, as defined in proposed § 1910.21. OSHA is using the term "walking-working surfaces" instead of the existing term "floor" to indicate clearly that subpart D addresses all surfaces where employees perform work. The Agency has always maintained that the OSHA general industry fall protection standards cover all walking-working surfaces. In fact, although OSHA never mentioned the term "roof" in the existing rule, it has consistently held that falls from roofs are covered by the existing rule. OSHA notes that the consensus standards on which the original fall protection requirements were based, ANSI A12.1 and A64, now combined at ANSI A1264.1, includes the term "roof" in its title. The revised rule reaffirms the existing Agency interpretation and practice and clarifies the language of the standards in that regard. Also, OSHA has consistently held that subpart D addresses the hazards of falling from a walking-working surface to any kind of lower level (*e.g.,* solid, liquid, or colloid).

Under paragraph (b) of the proposal, employers are required to select and use a fall protection system (or combination of systems) as provided by paragraphs (b)(1) through (b)(14). Each individual paragraph addresses the fall protection needs of particular walking-working surfaces and lists the fall protection systems that OSHA believes are appropriate to those surfaces. Only the systems listed are permitted to be used. The revised rule requires essentially the same coverage as the existing rule—protection of employees from falls of 4 feet or more to lower levels, with a few exceptions. One exception is when employees are working over dangerous equipment (*see* proposed paragraph

(b)(6) below). In that situation, employees must be protected from falls regardless of the height. On the other hand, when employees are working on scaffolds or fixed ladders, it is reasonable to allow a higher trigger height, hence the 10- and 24-foot (3 and 7.3 m) trigger heights proposed. Also, as mentioned above, the proposed general industry fall protection standards have been reorganized and formatted to be similar to the construction industry fall protection rule to bring consistency to the two rules.

Proposed paragraph (b)(1) sets forth the requirements for fall protection from unprotected sides and edges of walking-working surfaces. It provides that employees must be protected when they are exposed to falls from unprotected sides and edges of walking-working surfaces which are 4 feet (1.2 m) or more above lower levels. The options from which an employer can choose to provide this protection include both conventional systems—guardrail systems, safety net systems, personal fall protection systems, and travel restraint systems—and having employees work in a "designated area." OSHA defines a "designated area" in proposed § 1910.21(b) as a distinct portion of a walking-working surface delineated by a perimeter warning line in which *temporary* work may be performed without additional fall protection. A "designated area" is similar to a "controlled access zone" at construction worksites. Except for the "designated area" option, the proposed requirements are essentially the same as the existing general industry requirements in § 1910.23(c) and are similar to the construction standard at § 1926.501(b)(1).

This proposed standard does not specify a distance from the edge that is considered safe, *i.e.,* a distance at which fall protection is not required. Instead, it allows the employer to designate an area in which employees can work without fall protection. The criteria for designated areas and other fall protection systems are set forth in proposed § 1910.29. It is essential for authorized employees in designated areas exposed to fall hazards to be trained in accordance with provisions set forth in § 1910.30.

An exception to proposed paragraph (b)(1) applies to the unprotected side or edge of the *working side* of platforms used in slaughtering facilities, loading racks, loading docks, and teeming tables used in molten metal work. The exception states that when the employer demonstrates that use of guardrails on the working side of these platforms is infeasible, the work may be done without guardrails provided: (1) The work operation for which guardrails are infeasible is in process; (2) access to the platform is limited to authorized employees; and, (3) the authorized employees have been trained in accordance with proposed § 1910.30. Note that the exception is only for that part of the guardrail that would normally be installed on the *working side* of the platform. Employees must still be protected from falls from the other sides and edges of the platform. When work operations for which guardrails are infeasible are not in process, for example, during cleaning or maintenance, the exception does not apply. This is because OSHA is aware that, in some cases, work cannot be done when access is blocked by guardrails, or the guardrails touch carcasses and pose a health issue. These situations are not present during cleaning or maintenance. The Agency requests comment regarding the technological feasibility of requiring other means of fall protection (*e.g.,* travel restraint systems) in these applications. Please include supporting rationale, as well as information on the costs and benefits of such a provision.

Paragraph (b)(2) proposes fall protection requirements for employees in hoist areas of walking-working surfaces that are 4 feet (1.2 m) or more above lower levels. Employees must be protected through the use of guardrail systems, personal fall arrest systems, or travel restraint systems. If guardrails (or chains or gates if they are being used in lieu of guardrails at the hoist area) are removed to facilitate hoisting operations, then employees who lean through the access opening or out over the edge of the access opening to perform their duties are at risk and must be protected by the use of personal fall arrest systems. The proposed requirement is consistent with the existing general industry standard in § 1910.23(b)(1)(i). Except that the trigger height for providing fall protection is 4 feet (1.2 m) in the proposed general industry rule, the proposed requirement is also consistent with the construction industry standard at 1926.501(b)(3). The existing subpart D standard does not address fall protection at hoist areas separately from other holes and wall openings. In this proposal, holes are addressed in paragraph (b)(3) and wall openings in paragraph (b)(7) below. The criteria for grab handles are located at proposed § 1910.29(l).

Paragraph (b)(3) of this proposed rule requires that employees be protected from hazards associated with holes. Employees may be injured or killed if they step into holes, trip when caught in holes, fall through holes, or are hit by objects falling through holes. Some workplaces may present all of these hazards while others may have fewer. The proposed rule specifies protective measures applicable to each hazard.

Proposed paragraph (b)(3)(i) requires that employees be protected from falling into or through holes (including skylight openings) 4 feet (1.2 m) or more above lower levels by covers over the hole, erecting a guardrail system around the hole, or by the use of a personal fall arrest system. Proposed paragraph (b)(3)(ii) requires that covers be used to protect employees from tripping in or stepping into holes, and proposed paragraph (b)(3)(iii) requires that covers be used to protect employees from objects falling through overhead holes. The proposed requirements are essentially the same as those in existing general industry standards at § 1910.23(a)(4), (a)(8), and (a)(9), and the construction standard at § 1926.501(b)(4) except that the trigger height for providing fall protection for employees falling through holes is 4 feet (1.2 m) in the proposed general industry rule.

Proposed paragraph (b)(4) addresses fall protection from dockboards (bridge plates). Proposed paragraph (b)(4)(i) states that each employee on a dockboard (bridge plate) be protected from falling 4 feet (1.2 m) or more to lower levels by guardrail or handrail systems, except as provided by proposed (b)(4)(ii) of this section. Proposed paragraph (b)(4)(ii) provides that no fall protection (guardrail or handrail system) is required when motorized equipment is being used on dockboards (bridge plates) solely for material handling operations, provided that: (A) Employees are exposed to fall hazards of less than 10 feet (3 m); and (B) employees have been trained as provided by proposed § 1910.30. The proposed provision, in permitting employers to rely on training rather than on the use of conventional fall protection systems, is consistent with the proposed requirements for repair pits and assembly pits in § 1910.28(b)(8). An example of when this situation might occur would be the transfer of material between boxcars. Materials handling exposure is generally of limited duration, and requires ready access to the open sides. Guardrails would interfere with the transfer and could create a greater hazard to employees. The 10-foot (3 m) limitation in proposed paragraph § 1910.28(b)(4)(ii)(A) is consistent with similar requirements for work on elevated surfaces such as scaffolds (*see* proposed §§ 1910.27, and 1926.451(g)).

Additional requirements related to positioning and securing ramps and bridging devices are found in proposed § 1910.26, Dockboards (bridge plates).

In paragraph (b)(5), OSHA proposes that employees on runways and similar walkways be protected from falling 4 feet (1.2 m) or more to lower levels by guardrails. The proposed paragraph is essentially the same as existing § 1910.23(c)(1) and (2) and is consistent with the construction standard at § 1926.501(b)(6), except that the trigger height for providing fall protection is 4 feet (1.2 m) in the proposed general industry rule.

An exception to proposed paragraph (b)(5) permits runways used for special purposes (such as filling tank cars) to have the railing on one side omitted when the employer demonstrates that operating conditions necessitate such an omission. In these circumstances, the employer must minimize the fall hazard by providing a runway that is at least 18 inches (46 cm) wide, and providing employees with, and ensuring the proper use of, personal fall arrest systems or travel restraint systems. This proposed exception is consistent with ANSI 1264.1–2007. The Agency invites comment on current practices involving runways that are used for special purposes. Where are such runways used and how are employees who work on them protected?

Proposed paragraph (b)(6) addresses dangerous equipment. It proposes two requirements to protect employees from falling into or onto dangerous equipment. Examples of dangerous equipment include protruding objects, machinery, pickling or galvanizing tanks, degreasing units, or similar equipment. Proposed paragraph (b)(6)(i) addresses situations where employees are less than 4 feet (1.2 m) above dangerous equipment, and it requires that employees be protected by the use of guardrail systems or travel restraint systems unless the equipment is covered or otherwise guarded to eliminate the hazard. Proposed paragraph (b)(6)(ii) addresses situations where employees are more than 4 feet above dangerous equipment, and it requires employees to be protected by guardrail systems, safety net systems, personal fall arrest systems, or travel restraint systems. OSHA is proposing different methods for protecting employees depending on the fall distance. The Agency does not believe the use of safety net systems or personal fall arrest systems that meet the requirements of proposed § 1910.29 are appropriate when the fall distance is less than 4 feet (1.2 m), since there will not be sufficient distance below the employee for the system to work and the employee could make contact with the dangerous equipment. The proposed paragraph is essentially the same as the existing general industry standard at § 1910.23(c)(3) and the construction standard at § 1926.501(b)(8), except that the trigger height for providing fall protection is 4 feet (1.2 m) in both the proposed and existing general industry rules.

Paragraph (b)(7) proposes to require protection for employees who are exposed to the hazard of falling out or through wall openings. Under the proposal, wall openings (defined as a gap or void 30 inches (76 cm) or more high and 18 inches (46 cm) or more wide in any wall or partition through which employees can fall to a lower level) must be equipped with a guardrail system, safety net system, travel restraint system, or personal fall arrest system. OSHA believes the most practical method of compliance is the guardrail system because it provides protection at all times and for all employees who may have exposure at the wall opening. However, there may be cases where employers choose to use safety net systems, travel restraint systems, or personal fall arrest systems, which also will provide an appropriate level of protection. For that reason the provision has been written to permit the use of these other systems. This provision is essentially the same as the existing general industry standard at § 1910.23(b) and also with the construction industry rule for wall openings found in § 1926.501(b)(14), except that the trigger height for fall protection is 4 feet (1.2 m) in both the proposed and existing general industry rules.

The earlier (1990) proposed revision of subpart D proposed that in addition to providing conventional fall protection, employers also install grab handles on each side of the wall opening whenever the work activity required employees to reach through an unprotected opening. That requirement was based on existing § 1910.23(b)(1)(i) and (e)(10). OSHA is not including a requirement for grab handles at wall openings in this proposal because, unlike the 1990 proposal, this document contains a separate, specific requirement (*see* proposed paragraph (b)(2) above) for hoist areas, which includes a requirement to install grab handles. OSHA is not including the requirement for grab handles for all wall openings because OSHA intends that, when employees lean out and through a wall opening, that opening constitutes a "hoist area" and the requirements of proposed paragraph (b)(2) apply. The use of grab handles as a handhold is, of course, permitted at wall openings.

Proposed paragraph (b)(8) is a new provision, proposed to address the specific fall hazard created by vehicle repair pits and assembly pits. These pits are designed to provide employee access to the underside of a vehicle without elevating the vehicle. Typically, a vehicle is driven over the pit and the employee enters the pit via a flight of stairs. The employee then performs work on the underside of the vehicle.

OSHA currently requires fall protection for these pits, and has addressed their hazards through section 5(a)(1) (the general duty clause) of the OSH Act. This proposal sets out specific requirements to address this fall hazard. Under the proposal, employees exposed to falling a distance between 4 and 10 feet (1.2 and 3 m) into a vehicle repair pit need not be protected as required in proposed § 1910.28(b)(1) for unprotected sides and edges, provided the employer institutes the three specific work practices that OSHA believes will provide an appropriate level of protection. The option to use work practices is being proposed in recognition that repair and assembly pits present a unique problem in terms of striking a balance between protecting employees from falls and ensuring that the employees can reach the work area and perform their work. Conventional fall protection systems may not always be the most appropriate way to protect employees. For example, the use of guardrails for perimeter protection could interfere with driving vehicles over, or away from, the pit. Likewise, the use of personal fall arrest or travel restraint systems might prevent employees from reaching the area where the work needs to be performed. Further, once a vehicle is placed over the pit, the fall hazard is normally eliminated. The primary fall hazard to employees exists when there is no vehicle over the pit, but it is OSHA's understanding that employees are unlikely to be in the vicinity of a repair pit when there is no vehicle over the pit.

OSHA believes that adequate fall protection for employees can be provided by the methods proposed in paragraph (b)(8). Access to the edge (within 6 feet (1.8 m)) of the pit must be limited to trained, authorized employees (proposed (b)(8)(i)); the floor must be marked (proposed (b)(8)(ii)) to designate the unprotected area; and caution signs must be posted to warn employees of the unprotected area (proposed (b)(8)(iii)). OSHA believes such a well-marked designated area, extending back 6 feet (1.8 m) from the rim of the pit, provides sufficient early

warning to employees to protect them from unexpectedly falling into the pit. The use of caution signs that effectively notify employees of the presence of the fall hazard would restrict the area to authorized employees and would further limit employee exposure to the open perimeter. This provision only applies to pits less than 10 feet (3 m) deep; however, where employees are exposed to falling 10 feet (3 m) or more into a pit, conventional fall protection in accord with proposed paragraph (b)(1) must be used. OSHA notes that caution signs must meet the requirements of § 1910.145.

In proposed paragraph (b)(9), OSHA addresses fall hazards related to fixed ladders. Under the proposed standard, no fall protection is required when employees are exposed to falls from fixed ladders of less than 24 feet (7.3 m). Proposed paragraph (b)(9)(i) requires that fixed ladders be provided with cages, wells, ladder safety systems, or personal fall protection systems where the length of the climb is less than 24 feet (7.3 m) but the top of the ladder is more than 24 feet (7.3 m) above lower levels. Proposed paragraph (b)(9)(ii) addresses fall hazards where the total length of a climb equals or exceeds 24 feet (7.3 m). In the latter situation, additional measures also apply when cages, wells, ladder safety systems, or personal fall protection systems are used. If an employer chooses a personal fall protection system, rest platforms must be installed at intervals no greater than 150 feet (45.7 m). If the employer chooses a cage or well, no ladder sections may exceed 50 feet (15.2 m) in length, and each section must be offset from adjacent sections with landing platforms at maximum intervals of 50 feet (15.2 m). If an employer chooses a ladder safety system, no additional measures are proposed.

The existing standard imposes similar requirements but provides fewer fall protection options. Section 1910.27(d)(1)(ii) requires that either cages or wells be provided "on ladders of more than 20 feet to a maximum unbroken length of 30 feet," and § 1910.27(d)(2) requires landing platforms at 30-foot (9.1 m) intervals. This language, which is based on a 1956 ANSI standard that OSHA adopted in 1971, has widely been understood to mean that fall protection is required whenever the length of climb is 20 feet (6.1 m) or more. The proposed revision is consistent with the national consensus standard for fixed ladders, ANSI A14.3–2002. Additionally, as a matter of enforcement policy, OSHA has been allowing the use of other fall protection systems such as those proposed herein. Thus, the proposed requirement represents current industry practice. The proposed requirements are also identical to the construction industry standard at §§ 1926.1053(a)(18) and (19).

In proposed paragraph (b)(10), OSHA addresses fall hazards in the outdoor advertising industry. In this industry, employees often climb both portable and fixed ladders to reach their destination on the advertising billboard platform. OSHA is proposing seven provisions that take into consideration the unique nature of the work wherein both types of ladders are often used, with the portable ladder being used to reach the fixed ladder. The requirements proposed in paragraph (b)(10) are more flexible than those of proposed paragraph (b)(9) for fixed ladders in that (1) the trigger height for fall protection differs for employees engaged in outdoor advertising work and, (2) the method of fall protection differs. The proposed requirements reflect a policy that OSHA instituted for outdoor advertising work in 1991.

Specifically, on March 1, 1991 (56 FR 8801), OSHA granted a variance to one outdoor advertising employer, and later expanded this policy to apply to all outdoor advertising employers. The policy allowed some climbing activities to be performed without any conventional fall protection (wells, cages, ladder safety systems), provided that employees had received specific training *and* that certain work practices (for example, wearing a rest lanyard) were followed. If the employee's climb was above 50 feet (15.2 m), however, additional requirements applied. These requirements apply only where employees are engaged in climbing ladders to reach a billboard platform. Once the employees reach the platform (that is, they are no longer climbing a ladder), conventional fall protection is required with no exceptions. The seven proposed requirements are listed in the following paragraphs.

Proposed paragraph (b)(10)(i) would apply whenever the length of the climb is 50 feet (15.2 m) or less or where the total fall distance does not exceed 65 feet (19.8 m) above grade. In this situation, OSHA proposes that each employee who climbs a combination of a portable and a fixed ladder must wear a body belt or body harness equipped with an 18 inch (46 cm) rest lanyard that will enable the employee to tie off to the fixed ladder.

In paragraph (b)(10)(ii), OSHA proposes to require that employees who climb a combination of a portable and a fixed ladder where the length of the fixed ladder climb exceeds 50 feet (15.2 m), or where the ladder ascends to heights exceeding 65 feet (19.8 m) from grade, be protected through the installation of a ladder safety system for the entire length of the fixed ladder climb.

Proposed paragraph (b)(10)(iii) would require employers to ensure that each employee who climbs fixed ladders equipped with ladder safety systems use the systems properly and follow appropriate procedures for inspection and maintenance of the systems. In paragraph (b)(10)(iv), OSHA proposes that all ladder safety systems be properly maintained to ensure employee safety. This includes all ladder safety systems, regardless of height or date of installation.

In paragraph (b)(10)(v), OSHA proposes that each employee who routinely climbs fixed ladders must undergo training and demonstrate the physical capacity to perform the necessary climbs safely. These employees must satisfy the criteria for qualified climber found in § 1910.29(h). In the 1990 proposed rulemaking (55 FR 13364–66), OSHA had also proposed to allow the use of a "qualified climber" outside of the outdoor advertising industry. In this proposal, OSHA is limiting the use of qualified climbers to the outdoor advertising (billboard) industry because, over the last 18 years, there has been significant progress in protecting employees generally, and many new, easier-to-use fall protection systems are now readily available. In fact, anecdotal information as well as enforcement experience indicates that there is no reasonable basis for proposing to allow the use of qualified climbers in lieu of conventional fall protection outside of the outdoor advertising industry.

In paragraph (b)(10)(vi), OSHA proposes to require that employees must have both hands free of tools or material when ascending or descending a ladder. This provision is consistent with requirements of the national consensus standards in the ANSI/ALI A14 series on ladders, and with OSHA ladder standards for the construction industry at § 1926.1053. The same provision is also proposed in § 1910.23(b)(13) and will be applicable, in general, to all employees on ladders to ensure that employees keep three points of contact on the ladder at all times while ascending or descending.

In paragraph (b)(10)(vii), OSHA proposes to require that where qualified climbers are used, they must be protected by an appropriate fall protection system upon reaching their work positions.

In paragraph (b)(11), OSHA proposes requirements to protect employees from falling off stairway landings and from stairs. This paragraph addresses fall hazards from both the stairway landing and the exposed sides of the stairway. The requirements are essentially the same as the existing requirements in § 1910.24(h) to protect employees from falls from stairways.

In paragraph (b)(11)(i), OSHA is proposing that each employee exposed to a fall of 4 feet or more to lower levels from an unprotected side or edge of a stairway landing be protected by a stair rail or guardrail system. The proposal is essentially the same as the existing requirement in § 1910.24(h) and the construction industry standard for stairway landings in § 1926.1052(c)(12). Unlike proposed § 1910.28(b)(1) which addresses unprotected sides and edges in general, and allows the use of several systems to protect employees from falls, unprotected sides and edges of stairway landings must have stair rails or guardrails installed. OSHA believes that limiting the fall protection options to stair rails or guardrails is necessary because the other options listed in proposed § 1910.28(b)(1), such as safety net systems or personal fall arrest systems, would not be appropriate at stairway landings where employees are regularly and routinely exposed to falls from the unprotected sides and edges. Stair rail or guardrail systems provide for continuous protection.

In paragraph (b)(11)(ii), OSHA is proposing that employees exposed to falls from stairs having three treads and four or more risers be protected by stair railing systems and hand rails. Included with the proposed provision is a table that sets out the type/number of stair rails and handrails required based on the stair width and configuration of the stairway. An exception to the table is that handrails must be provided on both sides of ship stairs and alternating-tread type stairs. The proposed requirements are essentially the same as existing § 1910.23(d)(1).

In proposed paragraph (b)(12), OSHA establishes requirements to protect employees on scaffolds and rope descent systems from falls. As discussed earlier, OSHA is proposing to remove all the scaffold requirements from the general industry standards and require employers to comply with the construction industry standards for scaffolds. In view of that, OSHA is proposing in paragraph (b)(12)(i) to require that employers protect employees from falls from scaffolds by meeting the requirements for fall protection already set out in the construction industry standards of subpart L, Scaffolds (29 CFR 1926). In general, those requirements provide for fall protection whenever employees are exposed to falls of 10 feet (3 m) or more above lower levels. The existing requirements in subpart D already set the duty to have fall protection from scaffolds at or above 10 feet (3 m) from grade, so effectively there is no change.

In proposed paragraph (b)(12)(ii), OSHA requires that employees using a rope descent system be protected from falling 4 feet (1.2 m) or more to lower levels by a personal fall arrest system meeting the requirements in proposed § 1910.140 of subpart I of this part. OSHA notes that paragraph (c)(3) of proposed § 1910.140 requires that ropes used for fall protection be separate from ropes used to suspend the rope descent system. The principle of using independent fall protection systems is also reflected in § 1926.502(d)(15).

Proposed paragraph (b)(13) is a "catch all" provision applicable to walking-working surfaces not otherwise addressed and is intended to ensure that § 1910.28 covers all fall hazards in general industry. It sets forth clearly that *all* employees exposed to falls of 4 feet (1.2 m) or more to lower levels must be protected by a guardrail system, safety net system, personal fall arrest system, or travel restraint system, except where otherwise provided by proposed § 1910.28 or by fall protection provisions in other subparts of part 1910. This provision is intended to facilitate compliance for employers who do not fit any of the specific categories set by proposed § 1910.28. OSHA used this same approach in its fall protection requirements for the construction industry at § 1926.501(b)(15). The proposed new language expresses the current enforcement practice of the Agency, making it clear that employers must address all fall hazards in the workplace.

Proposed paragraph (b)(14) addresses fall protection for floor holes such as stairway floor holes and ladderways, and is consistent with existing requirements found in § 1910.23(a). Accordingly, as with existing § 1910.23(a) (and ANSI A1264.1–2007, Safety Requirements for Workplace Walking/Working Surfaces and Their Access; Workplace, Floor, Wall and Roof Openings; Stairs and Guardrails Systems), some, but not all, of the provisions in this proposed paragraph require toeboards when using fixed or removable guardrail systems. OSHA requests comment on whether toeboards should be required as a part of the guardrail systems used for all floor holes regulated under this proposed paragraph. If possible, the comments should provide information regarding the need for such a requirement, current industry practice, the effectiveness of toeboards in these situations, and the cost associated with adding this requirement to provisions of this paragraph not proposing to use toeboards.

Proposed paragraph (b)(14)(i) requires stairway floor holes to be guarded by a guardrail system. The railing must be provided on all exposed sides except at the entrance to the stairway. For infrequently used stairways where traffic across the hole prevents the use of a fixed guardrail system (as when located in an aisle), the employer has an option to use a guard that consists of a hinged floor-hole cover of standard strength and construction and a removable guardrail system on all exposed sides except at the entrance to the stairway.

Proposed paragraph (b)(14)(i) differs slightly from existing § 1910.23(a) in that it clarifies that use of a hinged floor-hole cover is an alternative to using fixed guardrail systems, which is only implied in existing § 1910.23(a). The proposed provision also defines the term "infrequently" in a manner that is consistent proposed § 1910.265, which defines the term "routinely" as "on a daily basis." OSHA believes the proposed definition will provide employers with helpful information about when use of a hinged floor-hole cover may be appropriate. With regard to the option to use a hinged floor-opening cover, OSHA requests information and comment on the use of automatically rising railings that come into position with the opening of a load-bearing cover on some infrequently used stairways as specified by the explanatory paragraph E3.1 of ANSI/ASSE A1264.1–2007, Safety Requirements for Workplace Walking/Working Surfaces and Their Access; Workplace, Floor, Wall and Roof Openings; Stairs and Guardrails Systems. The comments should provide, if possible, information regarding the availability of such guardrail systems, the prevalence of their use, the cost of the systems (including installation), and the protection such systems afford employees compared to fixed systems.

Proposed paragraph (b)(14)(ii) requires that ladderway floor holes or platforms be guarded by a guardrail system with toeboards on all exposed sides, except at the entrance opening, with passage through the railing provided by a swinging gate or offset so that an employee cannot walk directly into the hole.

Proposed paragraph (b)(14)(iii) requires that hatchway and chute-floor

holes be guarded using one of three options. The first option, specified in proposed (b)(14)(iii)(A), provides for hinged floor-hole covers of standard strength and construction and equipped with permanently attached guardrails that only leave one exposed side. When the hole is not in use, the cover must be closed, or the exposed side must be guarded by a removable guardrail system with top and mid rails. The second option, found in proposed paragraph (b)(14)(iii)(B), specifies a removable guardrail system with toeboards on not more than two sides of the hole and a fixed guardrail with toeboards on all other exposed sides. The removable guardrail system must remain in place when the hole is not in use. The third option, found in proposed paragraph (b)(14)(iii)(C), provides that, when operating conditions require feeding material through a hatchway or chute hole, employees be protected from falling through the hole by a guardrail system or a travel-restraint system meeting the applicable requirements of 29 CFR part 1910, subpart I.

OSHA requests comment on whether there are any other specific surfaces, operations, or work activities (*e.g.,* satellite dish realignment, chimney cleaning, and sky light maintenance) not addressed here in proposed paragraph (b) that should be treated separately. For each surface, operation, or activity, please provide the types of fall protection that OSHA should permit and provide the reasons why the surface, operation, or activity should be treated separately.

In paragraph (c) of § 1910.28, OSHA proposes to require employers to protect employees from injury from falling objects both by ensuring the use of head protection, and by complying with one of the following provisions: (1) Using toeboards, screens, or guardrail systems; (2) erecting a canopy structure over the potential fall area and keeping potential falling objects far enough from the edge of the higher level so those objects are unlikely to fall, even if they are accidentally displaced; or (3) barricading the area into which objects could fall, prohibiting employees from entering the barricaded area, and keeping objects far enough away from the edge of a higher level so those objects are unlikely to fall even if they are accidentally displaced. The proposed requirements, patterned after OSHA's construction industry standards in § 1926.501(c), clarify the intent of the existing general industry requirements in § 1910.23(b)(5) and (c)(1) pertaining to falling object hazards.

Section 1910.29 Fall Protection Systems Criteria and Practices

This section of the proposal provides the requirements for fall protection systems required by proposed § 1910.28 and by other subparts in part 1910 where criteria and practices are not specifically required. However, proposed § 1910.29 does not apply where another standard in part 1910 already specifies the criteria for a required fall protection system. For example, § 1910.269(g) sets a duty to use fall protection and also specifies the criteria for some of the required systems.

As explained in proposed § 1910.28, Duty to have fall protection, employers who are required by that section to provide fall protection must choose a fall protection measure from the options provided for the particular activity or operation. Then the employer must ensure that the chosen system or practice meets the criteria established in proposed § 1910.29. Additionally, as required by proposed § 1910.30 and § 1910.132(f), employees must be trained in how to use the system, including, where applicable, the installation and maintenance of the fall protection system.

The requirements proposed here, like the requirements proposed in § 1910.28, are patterned after the requirements in OSHA's construction industry standards. OSHA believes that this approach will bring consistency to its fall protection standards and make it easier for employers to comply, especially employers who perform work covered by both the construction and general industry standards. The criteria for *personal* fall protection systems are located at newly proposed § 1910.140 of subpart I, Personal Protective Equipment, which is being published as part of this proposal.

Paragraph (a)—General Requirements.

Proposed paragraph (a) sets general requirements applicable to all fall protection systems covered by part 1910. In paragraph (a)(1), OSHA proposes that all fall protection systems required throughout part 1910 conform to the requirements of this section or, where personal fall protection systems are used, to subpart I of this part. In proposed paragraph (a)(2), OSHA requires that employers provide and install all fall protection systems required by this subpart and comply with all other pertinent requirements of this subpart (including training) before any employee begins work that necessitates the use of fall protection. OSHA notes that under existing § 1910.132(h), with few exceptions (such as non-specialty safety-toe protective footwear), personal protective equipment, including fall protection equipment, must be provided by the employer at no cost to the employee.

OSHA's intent is that fall protection systems be installed, permanently where possible, so that the systems are in place and available for use whenever there is a potential exposure to fall hazards. Because most general industry employers are at fixed sites, OSHA envisions that employers will take a proactive approach to managing fall hazards and will want to have fall protection systems in place at all times. That is, OSHA believes employers will anticipate the need for employees to walk or work on surfaces where a potential fall hazard exists and install a permanent fall protection system (*e.g.,* guardrail system) or attachment (tie-off) point so that fall protection is readily available when needed. OSHA believes such planning is part of the standard operating procedures for many employers as they plan for overall safety at the workplace. Planning eliminates the need to use a less protective measure, like a safe work practice, when a more conventional method such as a guardrail system, restraint system, or personal fall arrest system would be more appropriate. OSHA, however, recognizes that there may be some, limited situations where the use of less protective, but nonetheless effective, measures may be warranted; for example, when the work to be performed is of a short term or temporary nature. To illustrate, OSHA does not envision that employers will put a permanent guardrail system around the perimeter of an entire roof when work on the roof is non-routine. When the work is non-routine, they may erect a permanent guardrail system on one small area of the roof, or, most likely, establish a designated area meeting the criteria in proposed paragraph (d).

Paragraph (b)—Guardrail Systems.

In paragraph (b), OSHA proposes that all guardrail systems (except those used on scaffolds which must comply with applicable part 1926 requirements) comply with the criteria set forth in proposed paragraphs (b)(1) to (b)(15) of this section. The 15 proposed requirements are essentially the same as the existing requirements in subpart D, and they are nearly identical to the construction industry requirements for guardrail systems found in § 1926.502(b). OSHA notes that the preamble to the final rule establishing § 1926.502 (59 FR 40733) contains

explanatory material for each of the provisions proposed for paragraph (b) and may provide additional information to assist employers in complying with the proposed rules.

Existing subpart D refers to both "standard railings" and "guardrails." In this proposal, the term "standard railings" will not be used. OSHA believes that the proposed revisions to the guardrail requirements are easier to understand, reflect current work practices, and ensure consistency among OSHA rules applicable to guardrails.

Proposed paragraph (b)(1) requires that the top edge of guardrail systems be 42 inches (107 cm), plus or minus 3 inches (8 cm), above the walking-working surface.[2] It also states that, when conditions warrant, the top edge of the guardrail system may exceed 45 inches (114 cm) provided all other conditions of proposed paragraph (b) have been met to protect employees from falling through openings in the guardrail system. The proposed provision is essentially the same as the existing requirement in § 1910.23(e)(1), except that the existing requirement does not specifically allow for exceeding the 45-inch (114 cm) top height requirement. The new language is added because OSHA has already adopted this approach in its construction industry standards at § 1926.502(b)(1). In the preamble to the final rule for the construction industry standard OSHA noted that it was allowing employers to exceed the 45-inch (114 cm) height requirement because it was aware that there will be situations where work conditions necessitate erecting the guardrail so the top edge height is greater than 45 inches (114 cm). OSHA believes such conditions may also exist in general industry; if so, exceeding the 42-inch (107 cm) height requirement would not impact employee safety. For that reason, OSHA is proposing the revised language.

OSHA is considering a new provision that would allow the use of barriers as the functional equivalent of guardrails. This provision would permit barriers, such as parapets, to be as low as 30 inches (76 cm) in height, provided the sum of the depth of the top of the barrier and the height of the top edge of the barrier is at least 48 inches (1.2 m). For example, at the minimum height of 30 inches, an 18-inch width would be required. The Agency requests comment regarding the technological feasibility of this proposed provision requiring other means of fall protection (*e.g.,* travel restraint systems) in these applications. Please include supporting rationale, as well as information on the costs and benefits of such a provision.

Proposed paragraph (b)(2) requires midrails, screens, mesh, intermediate vertical members, or equivalent intermediate structural members to be installed between the top edge of the guardrail system and the walking-working surface when there is no wall or parapet wall at least 21 inches (53 cm) high to keep employees from falling through the opening. The proposed provision is essentially the same as the existing requirements in § 1910.23(e)(1) and (e)(3)(v)(*c*), and in the construction industry standard at § 1926.502(b)(2).

In proposed paragraphs (b)(2)(i) through (iv) OSHA establishes requirements for midrails, screens, mesh, intermediate vertical members, and other structural members. Proposed paragraph (b)(2)(i) specifies that when midrails are used to comply with proposed paragraph (b)(2), they must be installed midway between the top edge of the guardrail system and the walking-working level. Proposed paragraphs (b)(2)(ii), (iii), and (iv) address the proper placement of screens, mesh, intermediate vertical members, and other structural members when they are used in lieu of midrails in the guardrail system.

Proposed paragraph (b)(3) requires guardrail systems to be capable of withstanding, without failure, a force of at least 200 pounds (890 N) applied within 2 inches (5 cm) of the top edge, in any outward or downward direction at any point along the top edge. Proposed paragraph (b)(4) requires that when the 200-pound load is applied in a downward direction, the top edge of the guardrail must not deflect to a height less than 39 inches (99 cm) above the walking-working level. Deflection is specified for the top edge because that is the point an employee is most likely to fall against and it must be high enough, at all times, to prevent the employee from falling over the top rail. The proposed provisions are essentially the same as the existing requirements in § 1910.23(e)(3)(v)(*b*). and in the construction industry standard at § 1926.502(b)(3) and (b)(4).

Proposed paragraph (b)(5) requires midrails, screens, mesh, intermediate vertical members, solid panels, and equivalent structural members to be capable of withstanding, without failure, a force of at least 150 pounds (667 N) applied in any downward or outward direction at any point along the midrail or other member. The existing standard does not contain a strength requirement for midrails and this omission has caused confusion among employers. The proposed provision is nearly identical to OSHA's construction industry standard at § 1926.502(b)(5). In that rule, OSHA explained that it chose the 150 pound strength test because it had determined that midrails need not be as strong as top rails to provide appropriate protection. OSHA also determined that a limit on deflection was not needed for midrails and other members.

Proposed paragraph (b)(6) requires guardrail systems to be surfaced to prevent injury to an employee from punctures or lacerations and to prevent snagging of clothing. The provision is based on existing § 1910.23(e)(1) and (e)(3)(v)(*a*) and OSHA's construction industry standard at § 1926.502(b)(6).

Proposed paragraph (b)(7) requires employers to ensure that the ends of all top rails and midrails do not overhang the terminal posts, except where such overhang does not constitute a projection hazard. The proposed provision is essentially the same as existing § 1910.23(e)(1) and OSHA's construction industry standard at § 1926.502(b)(7).

Proposed paragraph (b)(8) prohibits steel banding and plastic banding from being used as top rails or midrails. While this banding can often withstand a 200-pound load, it can tear easily if twisted. In addition, banding often has sharp edges which can cut a hand if seized. This proposed requirement is similar to a requirement found in OSHA's construction industry standard at § 1926.502(b)(8).

Proposed paragraph (b)(9) requires top rails and midrails of guardrail systems to have at least a 0.25-inch (0.6 cm) diameter or thickness. OSHA believes that the minimum thickness requirement is needed to prevent the use of rope that could cause cuts or lacerations. This requirement is based on the construction industry standard at § 1926.502(b)(9). The proposed requirement supplements the strength

[2] OSHA notes that the two previous proposals on walking-working surfaces included a "grandfather provision" permitting a guardrail height of 36 inches, rather than the proposed 42 inches, for guardrails installed within 60 days of the effective date of the final rule. (*See* proposed § 1910.28(b)(3), 55 FR 13360 (April 10, 1990) and 68 FR 23528 (May 2, 2003).) The 36-inch grandfather provision is not included in this proposal, nor does OSHA consider it to be equally safe to the "42 inches nominal" height currently required under existing § 1910.23(e). Therefore, to the extent that any previous OSHA letters of interpretation characterized a 36-inch guardrail height as a de minimis violation because of the grandfather provision in the two previous proposals, those interpretations are hereby superseded. (*See, e.g.,* 08/27/2008 Letter to Bryan Cobb and 03/08/1995 Memorandum from John Miles to Byron Chadwick.)

requirement proposed in (b)(3), (4), and (5) of this section. The purpose of this requirement is to assure that top rails and midrails made of high strength materials are not so thin that a worker grabbing a rail is injured by cuts or lacerations because of the small size of the rail.

Proposed paragraph (b)(10) requires that when guardrail systems are used at hoisting areas, a chain gate or removable guardrail section must be placed across the access opening between guardrail sections when hoisting operations are not taking place. The proposed requirement simply clarifies the requirements of existing § 1910.23(a)(3)(ii) and (b)(1)(i). It is identical to OSHA's construction industry standard at § 1926.502(b)(10).

Proposed paragraph (b)(11) requires that when guardrail systems are used at holes, they must be erected on all unprotected sides or edges of the hole. This requirement is identical to OSHA's construction industry standard at § 1926.502(b)(11).

Proposed paragraph (b)(12) requires that when guardrail systems are used around floor holes used for the passage of materials, the hole must have not more than two sides provided with removable guardrail sections to allow for the passage of materials. When the hole is not in use, it must either be closed over with a cover, or a guardrail system must be provided along all unprotected sides or edges. This requirement is based on existing § 1910.23(a)(8)(ii) and is the same as the construction industry standard at § 1926.502(b)(12). It is intended to prevent employees from falling into the hole.

Proposed paragraph (b)(13) requires that when guardrail systems are used around holes used as points of access (such as ladderway openings), they must either be provided with a gate, or be offset so that a person cannot walk directly into the hole. This requirement is essentially the same as the existing standard at § 1910.23(a)(2), the construction industry standard at § 1926.502(b)(13), and the national consensus standard, ANSI A1264.1–2007, American National Standard—Safety Requirements for Workplace Walking/Working Surfaces and Their Access; Workplace, Floor, Wall and Roof Openings; Stairs and Guardrail Systems.

Proposed paragraph (b)(14) requires that guardrail systems used on ramps and runways be erected along *each* unprotected side or edge. This requirement is essentially the same as the construction industry standard at § 1926.502(b)(14) for ramps and runways.

Proposed paragraph (b)(15) requires manila, plastic, or synthetic rope being used for top rails or midrails to be inspected as frequently as necessary to ensure that it continues to meet the strength requirements of proposed paragraph (b)(3) of this section. OSHA believes frequent inspection is necessary for ropes made of these materials to ensure that they do not deteriorate and lose strength. This requirement is the same as OSHA's construction industry standard at § 1926.502(b)(15).

Proposed paragraph (b)(16) requires guardrail systems used on scaffolds to meet the applicable requirements set forth in part 1926 of this chapter. As discussed above in proposed § 1910.27, Scaffolds and rope descent systems, OSHA is proposing to remove the general industry requirements for scaffolds, and instead require compliance with the construction industry requirements for scaffolds. The construction industry requirements specifying the criteria for guardrails used on scaffolds differ from the requirements proposed for guardrails used on other surfaces. Therefore, OSHA proposes to add new paragraph (b)(16) for consistency, and to promote compliance and eliminate confusion since many employers who use scaffolds perform both general industry and construction work.

Paragraph (c)—Safety Net Systems

Proposed paragraph (c) requires safety net systems used in general industry to meet the criteria and use requirements for safety net systems already promulgated for the construction industry at § 1926.502(c). There are no requirements in existing subpart D or elsewhere in part 1910 (the general industry standards) that address safety net systems. OSHA believes, however, that there are situations, especially in maintenance work, where, due to the unsuitability of guardrail systems or personal fall protection systems, the use of a safety net system is an appropriate means of employee protection. OSHA believes that safety net systems used in general industry should be subject to the same requirements already promulgated for the construction industry. Those requirements were based on the national consensus standard for safety nets (*i.e.,* ANSI A10.11–1989). Rather than repeating all of those requirements here, OSHA proposes to simply require that where safety net systems are used, they meet the requirement of § 1926.502(c). A complete discussion of each of the requirements and an explanation of their meaning can be found in the preamble to the construction fall protection rule of August 9, 1994, at 59 FR 40699 to 40702.

OSHA requests comment on whether requiring compliance with the construction rule is appropriate or whether OSHA should repeat each of those requirements in the general industry standard. OSHA believes safety net systems will not be used in general industry as often as other fall protection systems and, therefore, it would not be an inconvenience to require employers to follow the construction industry rules in part 1926 without repeating them here. This is the same approach OSHA is proposing for scaffolds used in general industry; *see* the discussion at § 1910.27 above. OSHA notes that the requirements for safety net systems codified in part 1926 are essentially the same as those prescribed in the most current version of ANSI A10.11–1989 (R1998), American National Standard for Construction and Demolition Operations—Personal and Debris Nets.

Paragraph (d)—Designated Areas

OSHA is proposing new requirements in paragraph (d) regarding the use of "designated areas." OSHA is proposing to allow the use of designated areas, in some instances, as an alternative to providing conventional fall protection. A designated area, defined in proposed § 1910.21, is a section of a walking-working surface around which a perimeter line has been erected so that employees within the area are warned, when they *see* or contact the line, that they are approaching a fall hazard. As required by proposed § 1910.30(a)(2)(iii), employees working in designated areas must be trained in how to work safely inside those area.

Designated areas may only be used for temporary, relatively infrequent work; for instance, when employees are sent to the center of the roof of a structure to perform maintenance on machinery, such as air conditioning equipment. The Agency anticipates that setting up and maintaining a warning line system, as specified in this proposed paragraph, around a designated area will ensure that affected employees can perform their work free from fall hazards. The construction industry standard, § 1926.501(b)(10), provides for use of a warning line system (in conjunction with other protection) when employees are performing roofing work on low-sloped roofs, and §§ 1926.501(b)(9) and 1926.502(k), permit the use of "controlled access zones" in other situations. To ensure OSHA standards regulate comparable work situations consistently, the Agency is basing

proposed paragraph (d) on the construction industry standards for warning line systems. The Agency requests comments and supporting rational on the appropriateness of using the construction industry requirements for controlled access zones (found at § 1926.502(g)) in lieu of its use of the construction industry requirements for warning lines. Among other differences, warning line systems require the line between stanchions to have a 500-pound tensile strength, whereas the controlled access zone only requires a 200-pound tensile strength.

Proposed paragraph (d)(1) sets conditions for the use of designated areas, requiring that employers ensure that employees remain in the designated area during work operations, that the work be of a temporary nature, that the slope of the surface be 10 degrees or less from the horizontal, and that the designated area be surrounded by a rope, wire, or chain supported by stanchions meeting the criteria in proposed paragraphs (d)(2) through (d)(4). The 10 degree slope limitation reflects OSHA's belief that the designated area approach is only appropriate for surfaces that have a slight slope (pitch) or unevenness. In particular, OSHA is concerned that a warning line system would not work on a surface that has a slope of more than 10 degrees because visibility and the employee's ability to stop when the warning line is contacted could not be ensured.

Proposed paragraph (d)(2), which is consistent with §§ 1926.502(f)(2) and 1926.502(g)(3), provides criteria for the materials used to establish designated areas. Proposed paragraph (d)(2)(i) requires that stanchions with rope, wire, or chain attached be capable of resisting, without tipping over, a force of at least 16 pounds (71 N) applied horizontally against the stanchion at a height of 30 inches (76 cm) above the working surface, perpendicular to the designated area line, and in the direction of the exposed edge. OSHA believes that the ability to resist a force of 16 pounds (71 N) ensures that an employee is adequately warned that the edge of the designated area has been reached.

Proposed paragraph (d)(2)(ii) requires that the rope, wire, or chain used to demarcate designated areas have a minimum breaking or tensile strength of 500 pounds (2.2 kN). In addition, after being attached to the stanchions, the line must support, without breaking, the 16 pound (71 N) force applied to the stanchion. This performance requirement assures that the line is durable and capable of functioning as intended, regardless of how far apart the stanchions are placed. In addition, the minimum tensile strength of 500 pounds (2.2 kN) assures that the line is made of material more substantial than string, such as wire, chain, rope, or heavy cord. OSHA believes that this minimum tensile strength is not an unreasonable burden on employers; however, comments are requested on the appropriateness of this requirement.

Proposed paragraph (d)(2)(iii) requires that the line be attached at each stanchion in such a way that pulling on one section of the line between stanchions will not result in slack being taken up in adjacent sections before a stanchion tips over. To maximize the warning capabilities of the line demarcating the designated area, the proposal limits the amount of potential slack in the system. Slack in the line decreases its warning properties.

Proposed paragraph (d)(2)(iv), which is also consistent with §§ 1926.502(f)(2) and 1926.502(g)(3), requires that the height of the designated area line be no less than 34 inches (86 cm) nor more than 39 inches (99 cm) from the work surface. This height is low enough to warn a short employee while the worker is stooped over, and at the same time, it is high enough not to be a tripping hazard for taller workers.

Proposed paragraph (d)(2)(v) requires the perimeter of the designated area to be readily visible from a distance up to 25 feet (7.6 m) away, or at the maximum distance a worker may be positioned away from the line, whichever is less. This criterion is provided so that the lines will be readily apparent and can effectively warn employees to stay away from fall hazards. OSHA does not believe that flagging, as required in §§ 1926.502(f)(2)(i) and 1926.502(g)(3)(i), is necessary for a designated area. In general industry, work is usually performed at a fixed location, while in construction there is a greater need for aids to visibility (such as flagging) because the work location, including the fall hazard, shifts from one part of the roof to another.

Proposed paragraph (d)(3) sets forth how the designated area is to be established. Proposed paragraph (d)(3)(i) requires that stanchions be erected as close around the work area as permitted by the work task. This criterion is included to make the stanchions as obvious as possible without interfering with the work.

Proposed paragraph (d)(3)(ii), which is consistent with §§ 1926.502(f)(1)(i) and 1926.502(g)(1), requires that the perimeter of the designated area be erected at least 6 feet (1.8 m) from the exposed edge of the fall hazard. OSHA believes that the 6-foot (1.8 m) distance is sufficient to allow an employee to stop moving toward the fall hazard after realizing that the perimeter line has been contacted. This distance would also provide an adequate safety zone should an employee trip and fall at the edge of the designated area.

Proposed paragraph (d)(3)(iii), which is consistent with § 1926.502(f)(1)(ii), requires that when mobile mechanical equipment is being used, the line be erected not less than 6 feet (1.8 m) from the unprotected side or edge which is parallel to the direction of mechanical equipment operation, and not less than 10 feet (3 m) from the unprotected side or edge perpendicular to the direction of mechanical equipment operation. The proposed criterion provides additional distance for the employee to stop moving towards the hazard, taking into account the extra momentum of the equipment being used.

Proposed paragraph (d)(4) requires that access to the designated area be made by a clear path formed by two warning lines attached to stanchions that meet the strength, height, and visibility requirements of proposed (d)(2) above. This proposed provision was adopted from the requirements in the construction industry standard at § 1926.502(f)(1)(iii). That standard requires access paths when warning line systems are used during roofing work performed on low sloped roofs. As discussed earlier, the concept of "designated areas" is based on the construction industry requirements for warning line systems and controlled access zones. OSHA requests comment on whether an access path is reasonably necessary to protect employees in general industry as they travel to and from designated areas. Specifically, should OSHA remove, keep, or alter this provision in the final rule?

Paragraph (e)—Covers

Proposed paragraph (e) sets requirements for covers used to protect employees from falling into holes in floors, roofs, roadways, and other walking-working surfaces. Except for proposed (e)(4), the proposed requirements are a consolidation and revision of existing requirements related to covers found in §§ 1910.23(a)(7), (8), and (9) and 1910.23(e)(7) and (8). They are consistent with the requirements for covers found in the construction industry standards at § 1926.502(i). The proposed requirements are written in performance language and replace the specification language of the existing standard.

Proposed paragraph (e)(1) requires that covers located in roadways and vehicular aisles be capable of

supporting, without failure, at least twice the maximum axle load of the largest vehicle expected to cross over the cover. The proposed requirement is a revision of the existing requirements in § 1910.23(e)(7)(i) and (e)(7)(ii) and has been rewritten in favor of the performance-oriented approach used in the construction industry standard at § 1926.502(i)(1).

Proposed paragraph (e)(2) requires that all other covers must be capable of supporting at least twice the weight of employees, equipment, and materials that may be imposed on the cover at any one time. OSHA believes that compliance with the proposed paragraph would adequately protect employees who traverse covers. The provision is identical to the construction industry requirement at § 1926.502(i)(2). The Agency requests comment on whether the distinction made between (e)(1) and (e)(2) is useful, or if proposed paragraph (e)(1) should be removed because of the apparent redundancy between it and paragraph (e)(2).

Proposed paragraph (e)(3) requires that covers be secured when installed so as to prevent accidental displacement, *e.g.,* by wind, equipment, or employees. This provision clarifies the requirement in existing § 1910.23(a)(9) that floor opening covers be held firmly in place and ensure that employers anticipate and take precautions against all possible causes of cover displacement. The proposed requirement is nearly identical to the construction industry standard at § 1926.502(i)(3).

Proposed paragraph (e)(4) requires that covers be color-coded or marked with the word "HOLE" or "COVER" to provide warning of the hazard. An exception to proposed paragraph (e)(4) states that the provision does not apply to cast iron manhole covers or steel grates such as those used on streets or roadways. This is a new requirement based on the construction industry standard at § 1926.502(i)(4). OSHA is proposing to add the requirement to the general industry standard for the same reason it was added to the construction industry standard. Many commenters to the construction industry standard noted that covers should be color-coded or marked because alerting employees that the cover is over a hole could prevent them from accidentally walking into the hole. OSHA requests comment on the need to include proposed (e)(4) in the final rule, and also for information on the extent to which employers are already marking or color-coding covers.

Paragraph (f)—Handrail and Stair Rail Systems

Proposed paragraph (f) would set requirements for handrail and stair rail systems to protect employees from falling. Proposed paragraph (f)(1) establishes height requirements for handrails and stair rail systems. Proposed paragraph (f)(1)(i) requires that the height of handrails be between 30 inches (76 cm) and 37 inches (94 cm), from the top of the handrail to the surface of the tread in line with the face of the riser at the forward edge of the tread. Existing § 1910.23(e)(5)(ii) requires that handrails be between 30 and 34 inches (76 and 86 cm) in height. The proposed requirement is consistent with the construction industry standard at § 1926.1052(c)(6). OSHA intends that the proposed change will not require any change to handrails that meet the existing standard.

Proposed paragraph (f)(1)(ii) is a revision of existing § 1910.23(e)(2) and requires the height of stair rails installed 90 days after the effective date of the final rule to be not less than 36 inches (91 cm). The existing standard sets a limit between 30 (76 cm) and 34 inches (86 cm), and the proposed rule would continue to allow stair rails installed before the new requirement takes effect to be at least 30 inches (76 cm) from the upper surface of the tread. The proposed paragraph raises the minimum height of new stair rails 6 inches (15 cm) and removes the existing maximum height requirement. The proposed requirement is consistent with the construction industry requirement at § 1926.1052(c)(3). Like the construction rule, it is based on a recommendation in a study conducted by the University of Michigan (OSHA–S041–2006–0666–0004). As discussed in the preamble to the construction industry final rule (55 FR 47668), that study showed that the minimum height for stair railings should be 42 inches (107 cm) and suggests that even 42 inches may be too low. Additionally, the applicable national consensus standard, ANSI A1264.1–2007, prescribes that the minimum height of stair rails be 34 inches (86 cm) and the upper height at 42 inches (107 cm). OSHA believes that setting the minimum height at 36 inches (91 cm) will afford a reasonable level of safety to employees. However, OSHA requests comment on whether it should raise the minimum height to 42 inches (107 cm) to be within the recommended range of the University of Michigan study.

OSHA also requests comment on whether it should set a maximum height for stair rail systems. OSHA is proposing to delete the current upper height limit of 34 inches (86 cm) because an upper height limit serves no purpose. The purpose of the stair rail system is to prevent employees from falling over the edge of open-sided stairways. Eliminating the upper limit would allow employers flexibility to install safer systems.

Proposed paragraph (f)(1)(iii) is a new provision which permits a stair rail to serve as a handrail when the height of the top edge is not more than 37 inches (94 cm) nor less than 36 inches (91 cm) when measured at the forward edge of the tread surface. OSHA believes a single system may perform the function of both a stair rail and handrail provided the rail is at the appropriate height. The proposed requirement is consistent with a similar requirement in the construction industry standard at § 1926.1052(c)(7) and provides greater flexibility without reducing safety.

Proposed paragraph (f)(2) continues the existing requirement in § 1910.23(e)(6) that there be a minimum clearance of 3 inches (8 cm) between a handrail and any obstructions. The existing rule is consistent with the construction industry requirement at § 1926.1052(c)(11). In the earlier (1990) rulemaking, OSHA proposed that the requirement be revised to require 1.5 inches (4 cm) of clearance. OSHA's basis for the 1990 proposal was to be consistent with many local building codes; the applicable national consensus standard at the time, ANSI A12.1–1973; the draft revision to it, ANSI A1264.1; and ANSI A117.1–1986, Providing Accessibility and Usability for Physically Handicapped People (Ref. 52 in Docket S–041). However, the 2007 revision to the ANSI A1264.1 standard sets 2.25 inches (6 cm) rather than 1.5 inches (4 cm) as the appropriate clearance; no reason is provided. OSHA does not believe that ¾ inch (2 cm) represents a significant difference and is of the opinion that consistency between the construction and general industry provisions will eliminate potential confusion and ease compliance. Nonetheless, OSHA requests comment on whether it should revise this provision to set the minimum clearance at 2.25-inch (6 cm) as does the national consensus standard.

In paragraph (f)(3), OSHA proposes a minor revision to existing § 1910.23(e)(1) for stair rails and § 1910.23(e)(5)(i) for handrails. The proposed provision, like the existing provisions, would require the rails to be smooth-surfaced to prevent injury from puncture, laceration, or snagging hazards. The revised provision is written in clearer language. A similar

provision has been proposed in § 1910.29(b)(6) for the top rail of guardrail systems. The proposed requirement is consistent with the construction industry standard at § 1926.1052(c)(8).

Proposed paragraph (f)(4), based on existing § 1910.23(e), requires that the openings in stair rail systems be a maximum of 19 inches (48 cm) in their least dimension. The proposed requirement is consistent with the requirement for openings in guardrail systems in proposed paragraph (b)(2)(iii) of this section, which in turn is based on a study by the former National Bureau of Standards (now known as the National Institute of Standards and Technology) (Ref. 11 to Docket S–041). It is also consistent with the construction industry standards at § 1926.1052(c)(4) for openings in stair rails and with § 1926.502(b)(2)(iii) and (iv) pertaining to the size of openings in construction guardrail systems.

Proposed paragraph (f)(5), which is based on existing § 1910.23(e)(5)(i), requires handrails to provide a firm handhold for employees. The proposed provision is consistent with the construction industry standard at § 1926.1052(c)(9).

Proposed paragraph (f)(6), which is also based on existing § 1910.23(e)(5)(i), requires stair rail systems to be designed and constructed so that their ends do not present a projection hazard into which employees may inadvertently walk. The proposed provision is consistent with the construction industry standard at § 1926.1052(c)(10).

Proposed paragraph (f)(7) requires handrails and the top rails of stair rail systems to be capable of withstanding, without permanent deformation or a loss of support, a force of at least 200 pounds (890 N) applied within two inches (5 cm) of the top edge, in any downward or outward direction, at any point along the top edge. This is a minor revision of existing § 1910.23(e)(3)(iv) and (e)(5)(iv), and clarifies the design criteria for handrails and stair rails. It is consistent with the construction industry standards for stair rail systems in § 1926.1052(c)(5).

Paragraph (g)—Cages, Wells, and Platforms Used With Fixed Ladders

Proposed paragraph (g) establishes criteria for cages, wells, and platforms used with fixed ladders. The proposed requirements are a revision of the existing criteria located at § 1910.27(d).

Proposed paragraph (g)(1) requires that where cages and wells are installed on fixed ladders, they must be designed to permit easy access to or egress from the ladders that they enclose. The cages and wells must be continuous throughout the length of the fixed ladder except for access, egress, and other transfer points. Cages and wells must be designed and constructed to contain employees in the event of a fall and to direct them to a lower landing. The current standards, in § 1910.27(d), provide detailed specifications for the construction of cages and wells used on fixed ladders. OSHA has eliminated these specifications in this proposal in favor of performance requirements that address the necessary characteristics for providing proper cages and wells. OSHA believes that the existing specifications are too design restrictive, and that the use of performance language will allow employers the flexibility to install cages and wells that fit a particular situation, without compromising employee protection.

Proposed paragraph (g)(2) requires that the landing platforms on fixed ladders have a horizontal surface of at least 24 inches by 30 inches (61 cm by 76 cm). The criteria for the platform size in the proposed requirement is the same as existing § 1910.27(d)(2)(ii) and is also found in ANSI A14.3–2002. Platforms used on fixed ladders, like other platforms, must conform to the requirements set forth in proposed § 1910.22(b). That is, platforms must be strong enough to support the loads imposed on them.

Paragraph (h)—Qualified Climbers

Proposed paragraph (h) sets forth the criteria that employees must meet to be considered qualified climbers. The option to use a qualified climber in lieu of providing positive fall protection is *only* permitted in certain outdoor advertising operations, as established in proposed § 1910.28(b)(10). As provided in proposed § 1910.28(b)(10), upon reaching the platform, an employee must use fall protection. The criteria and performance requirements proposed here are based on the criteria requirements OSHA has enforced in the outdoor advertising industry as part of a variance originally granted to Gannett Outdoor Advertising on March 1, 1991 (56 FR 8801). The policy expressed in that variance was later extended to all employers engaged in outdoor advertising under a compliance directive (*i.e.,* STD 01–01–014) (Ex. 4).

Proposed paragraph (h)(1) requires that a qualified climber be physically capable of performing the duties that may be assigned, as demonstrated through observations of actual climbing activities or by a physical examination.

Proposed paragraph (h)(2) requires that a qualified climber have successfully completed a training or apprenticeship program that included hands-on training for the safe climbing of ladders, and that the climber be retrained as necessary to ensure the critical skills are maintained. This requirement is in addition to the training requirements in proposed § 1910.30.

Proposed paragraph (h)(3) requires the employer to ensure, through performance observations and formal classroom or on-the-job training, that the qualified climber has the skill to safely perform the climb.

Proposed paragraph (h)(4) requires that qualified climbers have climbing duties as one of their routine work activities. This is necessary to assure that they maintain climbing proficiency.

Paragraph (i)—Ladder Safety Systems

Proposed paragraph (i) establishes system performance and use criteria applicable to ladder safety systems. Existing subpart D, at § 1910.27(d)(5), permits the use of ladder safety systems (formerly called ladder safety devices), but does not specify criteria for them. The criteria proposed are based on the requirements for ladder safety systems in the construction industry standard for fixed ladders at §§ 1926.1053(a)(22) and (23) and the applicable national consensus standard for fixed ladders, ANSI A14.3–2002, Safety Standards for Ladders—Fixed.

Proposed paragraph (i)(1) specifies that ladder safety systems must permit the employee using the system to ascend or descend without continually having to hold, push, or pull any part of the system, leaving both hands free for climbing. The proposed requirement is consistent with ANSI A14.3 and the construction industry standard at § 1926.1053(a)(22)(ii).

Proposed paragraph (i)(2) specifies that the connection between the carrier or lifeline and the point of attachment to the body belt or harness must not exceed 9 inches (23 cm) in length. The proposed requirement is consistent with ANSI A14.3 and the construction industry standard at § 1926.1053(a)(22)(iv).

Proposed paragraph (i)(3) specifies that mountings for rigid carriers must be attached at each end of the carrier, with intermediate mountings, as necessary, spaced along the entire length of the carrier to provide the strength necessary to stop employee falls. The proposed requirement is consistent with ANSI A14.3 and the construction industry standard at § 1926.1053(a)(23)(i). OSHA notes that the manufacturer's recommendations should indicate the need for, and number of, intermediate mountings; for that reason, OSHA uses

the phrase "as necessary" rather than the use of more specific terminology.

Proposed paragraph (i)(4) requires mountings for flexible carriers to be attached at each end of the carrier. It further requires that cable guides utilized with a flexible carrier be installed at a minimum spacing of 25 feet (7.6 m) and a maximum spacing of 40 feet (12.2 m) along the entire length of the carrier. The proposed requirement is consistent with ANSI A14.3 and the construction industry standard at § 1926.1053(a)(23)(ii).

Proposed paragraph (i)(5) specifies that the design and installation of mountings and cable guides must not reduce the design strength of the ladder. The proposed requirement is consistent with ANSI A14.3 and the construction industry standard at 1926.1053(a)(23)(iii).

Proposed paragraph (i)(6) sets the performance criteria for ladder safety systems, requiring that ladder safety systems and their support systems be capable of withstanding, without failure, a drop test consisting of an 18-inch (46 cm) drop of a 500-pound (227 kg) weight. The proposed requirement is consistent with ANSI A14.3 and the construction industry standard at § 1926.1053(a)(22)(i).

OSHA notes that where personal fall protection systems are used to protect employees from falls from ladders, those systems must meet the requirements of subpart I of this part.

Paragraph (j)—Personal Fall Protection Systems

Proposed paragraph (j) requires that body belts, body harnesses, and other components used in personal fall arrest systems, work positioning systems, travel restraint systems, or other fall protection systems meet the applicable requirements of subpart I of this part.

Paragraph (k)—Protection From Falling Objects

Proposed paragraph (k) sets forth the performance criteria for toeboards, guardrails, and canopies used to provide employee protection from falling objects. Paragraph (c) of § 1910.28 requires employers to protect employees from falling objects. The proposed requirements reflect existing criteria in § 1910.23(e)(4) for toeboards and other measures used to provide this protection and include new criteria that must be met when canopies are used to provide protection. The proposed requirements are identical to those in the construction standards at 29 CFR 1926.502(j).

Proposed paragraph (k)(1) requires that where toeboards are used, they must be erected along the edge of overhead walking-working surfaces for a distance sufficient to protect any employee working below.

Proposed paragraph (k)(2) specifies that toeboards must be a minimum of 3.5 inches (9 cm) in vertical height from their top edge to the level of the walking-working surface. Additionally, toeboards must have a clearance of not more than 0.25 inch (0.5 cm) above the walking-working surface, and the toeboards must be solid or have no opening over 1 inch (3 cm) in the greatest dimension. An exception to this requirement applies when toeboards are used around repair, service, and assembly pits. In those cases, the toeboards must be at least 2.5 inches (6 cm) high. When employers can demonstrate that toeboards would prevent access to vehicles over pits, the toeboards may be omitted.

Proposed paragraph (k)(3) specifies that where tools, equipment, or materials are piled higher than the top edge of a toeboard, then paneling or screening must be erected from the walking-working surface or toeboard to the top of a guardrail system's top rail or midrail for a distance sufficient to protect employees below.

Proposed paragraph (k)(4) specifies that toeboards must be capable of withstanding, without failure, a force of at least 50 pounds (222 N) applied in any downward or outward direction at any point along the toeboard.

Proposed paragraph (k)(5) requires that, when guardrails are used as falling object protection, openings must be small enough to prevent passage of potential falling objects that could injure workers below.

Proposed paragraph (k)(6) requires that when canopies are used, they must be strong enough to prevent collapse or penetration when struck by falling objects.

Paragraph (l)—Grab handles

In paragraph (l), OSHA proposes that where grab handles are used, they be at least 12 inches (30 cm) in length and be mounted to provide at least 3 inches (8 cm) of clearance from the side framing or the opening area. Grab handles must be capable of withstanding a maximum horizontal pull-out force equal to two times the intended load, or 200 pounds (890 N), whichever is greater. OSHA notes that it has proposed to require the use of grab handles in § 1910.28(b)(2), Hoist areas. The proposed requirement is essentially the same as the existing requirement in § 1910.23(e)(10). OSHA requests comment on whether it should further simplify this requirement by eliminating that portion of the requirement that pertains to the length and the clearance space of grab handles, leaving only that portion of the proposed requirement concerned with pull-out force.

Section 1910.30 Training Requirements

In § 1910.30, OSHA proposes to add new requirements for employers to train, and where necessary, to retrain employees in the subject areas covered by revised subpart D. Specifically, employers will have to ensure that employees are trained to recognize fall hazards, know what do about the hazards, and how to use the equipment provided to them for protection. In addition, the new requirements call for employees to receive training about the hazards associated with certain equipment.

OSHA believes these new training requirements are necessary to ensure that employees are familiar with hazards, especially fall hazards, pertinent to the various walking-working surfaces in their workplace. Unlike OSHA's construction industry standards, there is no "generic" training section in the general industry standards. OSHA believes that effective training is vital in preventing and reducing work-related injuries, especially those caused by falls. OSHA also believes that educating employees provides a proactive approach to injury prevention.

OSHA notes that existing § 1910.132(f) sets training requirements for employees using certain types of PPE. In proposed § 1910.140, OSHA specifies that existing § 1910.132(f) apply to PPE used for fall protection. As a result, some of the requirements in § 1910.132(f) may overlap with the training requirements in this paragraph. It is not OSHA's intent, however, that employers provide duplicate training to meet their obligations under proposed subparts D and I.

Paragraph (a) Fall hazards.

Proposed paragraph (a) addresses fall hazards. Proposed paragraph (a)(1) requires the employer to provide training for each employee who uses personal fall protection equipment and those required to be trained as indicated elsewhere in this subpart. The training must enable each employee to recognize the hazards of falling and the procedures to be followed to minimize these hazards. The purpose of the training is to enable the employee to recognize fall hazards and to learn how to minimize these hazards. OSHA believes that it is important for employees to demonstrate the knowledge, skills, and ability to protect

themselves before they are exposed to a fall hazard.

The training required in proposed § 1910.30 is directed to employers whose employees use personal fall protection equipment and those who otherwise are required to be trained as specifically indicated in this subpart (*e.g.,* employees working near unprotected sides and edges at loading docks).

Are there any other instances in this subpart where training under § 1910.30 should specifically be required? Should employees exposed to fall hazards over four feet (including those using ladders) be trained? Do employees who use portable guardrails (*e.g.,* around floor holes or at hoist areas) need to be trained? Do employees who use portable ladders need to be trained on hazard recognition and proper use of the ladder? Do employees who use fixed ladders need to be trained in hazard recognition and proper climbing techniques? Since BLS data (*http://www.bls.gov/iif/oshcdnew.htm*) indicate falls to the same level (such as slips and trips resulting in a fall to the surface on which the employee was walking) are a significant source of injury, would additional training requirements for these hazards better protect employees? Are there circumstances where walking-working surfaces pose hazards, because of the nature of the work, which are infeasible to eliminate (*e.g.,* a wet floor in a carwash bay) and training would help minimize the risk of slips, trips, or falls?

Proposed paragraph (a)(2) requires that each employee be trained by a qualified person, and identifies four specific areas that the training must cover, including:

(i) The nature of fall hazards in the work area;

(ii) The correct procedures for erecting, maintaining, disassembling, and inspecting the fall protection systems to be used;

(iii) The use and operation of guardrail systems, safety net systems, warning lines used in designated areas, and other protection; and

(iv) The use, operation, and limitations of personal fall protection systems including proper hook-up, anchoring and tie-off techniques, methods of use, and proper methods of equipment inspection and storage as recommended by the manufacturer.

The performance-oriented approach to training proposed in paragraph (a)(2) provides flexibility for the employer in designing the training. While the proposed paragraph specifies topics that must be covered, it does not specify how the training is to be provided nor does it specify any particular number of hours. The proposed paragraph is written to require training to be provided by a "qualified person." OSHA believes that the involvement of a qualified person who is knowledgeable in the subject area and industry hazards, in conjunction with the specific requirements of proposed paragraphs (a) and (c), provides appropriate assurance that employees will be adequately trained.

Paragraph (b) Equipment hazards.

Proposed paragraph (b) addresses training with regard to equipment regulated by proposed subpart D. Proposed paragraph (b)(1) requires employers to ensure that employees are trained in the proper care, use, and inspection of all equipment covered by this subpart before using it.

Proposed paragraph (b)(2) requires that employees be instructed in the proper placing and securing of dockboards to prevent unintentional movement. Compliance with this provision will help employers meet their obligations under proposed § 1910.26. The hazards associated with dockboards becoming dislodged are significant, and OSHA believes that proper employee training will help to reduce these hazards.

Proposed paragraph (b)(3) requires the employer to ensure that all employees who use rope descent systems are trained and retrained as necessary in the proper rigging and safe use of that equipment. Compliance with this provision will help employers meet their obligations under proposed § 1910.27 for rope descent systems. Improper use of rope descent system equipment can lead to serious injuries and fatalities. OSHA believes that training employees to use the equipment properly minimizes the risks of equipment failure and employee falls.

Paragraph (c) Retraining.

Proposed paragraph (c) requires employees to be retrained whenever the employer has reason to believe that the employee does not have the understanding and skill required by proposed paragraphs (a) and (b). Specifically, OSHA requires retraining whenever changes in the workplace or changes in the fall protection systems or equipment render previous training obsolete; or when an employee has not retained the understanding or skill required by proposed paragraphs (a) and (b) of this section. The training requirements in this section have been written to indicate clearly that employers have an ongoing responsibility to maintain employee proficiency in the use and care of fall protection equipment, and to ensure employees are trained in safe work practices and can recognize hazards associated with certain equipment.

Paragraph (d) Training Must Be Understandable

Proposed paragraph (d) requires employers to provide information and training in a manner that is understandable to each employee. Differences in language, reading capabilities, and physical challenges may create communication issues in a workplace. It is essential that employers adapt their training methods so that all of their employees comprehend the information and training provided.

Other revisions to part 1910

The proposed changes to subparts D and I result in the need to make conforming changes to subparts F, N, and R in 1910. These changes, which are presented at the end of this proposal, are self-explanatory and do not substantially affect the requirements of these subparts.

References

- *Consumer Product Safety Commission Offers Safety Tips to Prevent Ladder Injuries, Ladder Safety Alert;* U.S. Consumer Product Safety Commission, Washington, DC 20207, undated (Web address: *http://www.cpsc.gov/CPSCPUB/PUBS/ladder.html*).
- *Injury Facts;* National Safety Council, 1121 Spring Lake Drive, Itasca, IL 60143–3201; 2005–2006 edition.
- Murphy, Patricia J. *Get a Leg Up on Ladder Safety; Family Safety & Health,* Spring 2001. Available through the National Safety Council at the following web address: *http://www.nsc.org/issues/firstaid/ladder.htm.*
- *Overview of BLS Statistics on Worker Safety and Health,* Bureau of Labor Statistics, Washington, DC (Web address: *http://www.bls.gov/bls/safety.htm*).
- *Preventing Slips, Trips, and Falls,* Professional Development Series, Participant's Guide (Kit Number 12466–0000). National Safety Council, 444 North Michigan Avenue, Chicago, Illinois 60611, 2006.
- *Portable Ladders;* Quick Card, Occupational Safety and Health Administration, Washington, DC, 2005.
- *Stairways and Ladders, A Guide to OSHA Rules;* Occupational Safety and Health Administration, Washington, DC, 2003.
- U.S. Department of Health and Human Services, Center for Disease Control and Prevention, National Institute for Occupational Safety and

Health, *Worker Deaths by Falls, A Summary of Surveillance Findings and Investigative Case Reports,* Cincinnati, Ohio 45226–1998, November 2000.

Useful Web sites providing information on safety include:

- OSHA's public page (contains many useful safety and health topics): *http://www.osha.gov/*.
- National Institute of Occupational Safety and Health: *http://www.cdc.gov/niosh/*.
- National Safety Council: *http://www.nsc.org/*.
- U.S. Consumer Product Safety Commission: *http://www.cpsc.gov/*.

The following industry codes and standards were used in the development of this proposed rule:

Industry codes and standards for ladders:

- ANSI [3] A14.1–2000, American National Standard for Ladders—Wood Safety Requirements.
- ANSI A14.2–2000, American National Standard for Ladders—Portable Metal—Safety Requirements.
- ANSI A14.3–2002, American National Standard for Ladders—Fixed—Safety Requirements.
- ANSI A14.4–2002, American National Standard Safety Requirements for Job-Made Wooden Ladders.
- ANSI A14.5–2000, American National Standard for Ladders—Portable Reinforced Plastic—Safety Requirements.
- ANSI A14.7–2006, American National Standard for Mobile Ladder Stands and Mobile Ladder Stand Platforms.

Industry standards and codes for step bolts and manhole steps:

- ASTM [4] C 478–07, American Society for Testing and Materials Standard Specification for Precast Reinforced Concrete Manhole Sections.
- ASTM A394–07, American Society for Testing and Materials Standard Specification for Steel Transmission Tower Bolts, Zinc-Coated and Bare.
- ASTM C 497–05, American Society for Testing and Materials Test Methods for Concrete Pipe, Manhole Sections, or Tile.
- IEEE [5] 1307–2004, IEEE Standard for Fall Protection for Utility Work.
- ANSI/TIA [6] –222–G–2005, Structural Standard for Antenna Supporting Structures and Antennas.

Industry codes and standards for stairs and stairways:

- ANSI A1264.1–1995 (R2002), American National Standard for Safety Requirements for Workplace Floor and Wall Openings, Stairs and Railing Systems.
- ANSI A1264.1–2007, American National Standard Safety Requirements for Workplace Walking/Working Surfaces and Their Access; Workplace, Floor, Wall and Floor Openings; Stairs and Guardrail Systems.
- NFPA 101–2006, National Fire Protection Association Life Safety Code.
- ICC–2003, International Code Council International Building Code.

Industry codes and standards for dockboards (bridgeplates):

- ASME B56.1–2000, American Society of Mechanical Engineers, Safety Standard for Low Lift and High Lift Trucks.
- ASME B56.1–2004, American Society of Mechanical Engineers, Safety Standard for Low Lift and High Lift Trucks.
- ANSI/MH30.1–2000, American National Standard For the Safety Performance, and Testing of Dock Leveling Devices Specification.
- ANSI/MH30.2–2005, Portable Dock Loading Devices: Safety, Performance, and Testing.

Industry codes and standards for scaffolds and rope descent systems:

- ANSI/IWCA I–14.1–2001, Window Cleaning Safety.
- ANSI/ASCE 7–2005, American National Standard for Minimum Design Loads for Buildings and Other Structures.
- ANSI A1264.1–1995 (R2002), American National Standard for Safety Requirements for Workplace Floor and Wall Openings, Stairs and Railing Systems.
- ANSI A1264.1–2007, American National Standard Safety Requirements for Workplace Walking/Working Surfaces and Their Access; Workplace, Floor, Wall and Floor Openings; Stairs and Guardrail Systems.

Industry codes and standards for fall protection (duty, systems criteria, and practices) and training requirements:

- ANSI A10.11–1989 (R1998), American National Standard for Construction and Demolition Operations—Personnel and Debris Nets.
- ANSI A14.3–2002, American National Standard for Ladders—Fixed—Safety Requirements.
- ANSI A14.7–2006, American National Standard for Mobile Ladder Stands and Mobile Ladder Stand Platforms.
- ANSI A1264.1–1995 (R2002), American National Standard for Safety Requirements for Workplace Floor and Wall Openings, Stairs and Railing Systems.
- ANSI A1264.1–2007, American National Standard, Safety Requirements for Workplace Walking/Working Surfaces and Their Access; Workplace, Floor, Wall and Floor Openings; Stairs and Guardrail Systems.
- ANSI/IWCA I–14.1–2001, Window Cleaning Safety.
- ANSI Z359.0–2007, American National Standard, Definitions and Nomenclature Used for Fall Protection and Fall Arrest.
- ANSI Z359.1–2007, American National Standard, Safety Requirements for Personal Fall Arrest Systems, Subsystems and Components.
- ANSI Z359.2–2007, American National Standard, Minimum Requirements for a Comprehensive Managed Fall Protection Program.
- ANSI Z359.3–2007, American National Standard, Safety Requirements for Positioning and Travel Restraint Systems.
- ANSI Z359.4–2007, American National Standard, Safety Requirements for Assisted-Rescue and Self-Rescue Systems, Subsystems and Components.

The following studies, cited in OSHA's April 10, 1990, proposed rulemaking (55 FR 13421), provide useful and relevant information, and are a valuable archival resource. These studies provide information that may be helpful in understanding and implementing the proposed standards for walking-working surfaces being proposed today.

I. General References

- *Accident Prevention Manual for Industrial Operations;* National Safety Council, 444 North Michigan Avenue, Chicago, Illinois 60611, 1980.
- *A History of Walkway Slip-Resistance Research at the National Bureau of Standards,* Special Publication 565; National Bureau of Standards, National Technical Information Service, Springfield, Virginia 22151, December 1979.
- *A New Portable Tester for the Evaluation of the Slip-Resistance of Walkway Surfaces,* Technical Note 953; National Bureau of Standards, National Technical Information Service, Springfield, Virginia 22151, July 1977.
- Miller, James *et al. Work Surface Friction: Definitions, Laboratory and Field Measurements, and a Comprehensive Bibliography;* The University of Michigan, Ann Arbor, Michigan 48109, February 1983. (NTIS *PB 83–243634, PE 83–243626, PB 84-175926).
- Chaffin, Don B. *et al. An Ergonomic Basis for Recommendations Pertaining*

[3] ANSI: American National Standards Institute.

[4] ASTM: American Society for Testing and Materials.

[5] IEEE: Institute of Electrical and Electronics Engineers.

[6] TIA: Telecommunications Industry Association.

to Specific Sections of OSHA Standard, 29 CFR Part 1910, Subpart D—Walking and Working Surfaces; The University of Michigan, Ann Arbor, Michigan 48109, March 1978.

• Ayoub, M. and Gary M. Bakken. *An Ergonomic Analysis of Selected Sections in Subpart D, Walking/Working Surfaces;* Texas University, Lubbock, Texas 79409, August 1978.

• *An Overview of Floor-Slip-Resistance Research with Annotated Bibliography,* Technical Note 895; National Bureau of Standards, National Technical Information Service, Springfield, Virginia 22151, January 1976.

• *A Bibliography of Coefficient of Friction Literature Relating to Slip Type Accidents;* Department of Industrial and Operations Engineering, College of Engineering, University of Michigan, Ann Arbor, Michigan 48104, February 1983.

• *Falls from Elevations Resulting in Injuries;* U.S. Department of Labor, Bureau of Labor Statistics, National Technical Information Service, Springfield, Virginia 22151, June 1984.

• English, William. *Slips, Trips and Falls—Safety Engineering Guidelines for the Prevention of Slips, Trip and Fall Occurrences;* Hanrow Press, Inc., P.O. Box 847, Del Mar, California 92014, 1989. (Also, telephone 800–235–5588 or e-mail at *heg101@msn.com*.)

II. Ladder References

• Chaffin, Don B. and Terrence J. Stobbe. *Ergonomic Considerations Related to Selected Fall Prevention Aspects of Scaffolds and Ladders as Presented in OSHA Standard 29 CFR Part 1910 Subpart D;* The University of Michigan, Ann Arbor, Michigan 48104, September 1979.

• *Ergonomics Considerations Related to Selected Fall Prevention Aspects of Scaffolds and Ladders as Presented in OSHA Standard 29 CFR Part 1910 Subpart D;* The University of Michigan, Ann Arbor, Michigan 48104.

III. Stair References

• Archea, John *et al. Guidelines for Stair Safety;* NBS Building of Science Series 120, National Bureau of Standards, National Technical Information Service, Springfield, Virginia 22151.

• Carson, D. H. *et al. Safety on Stairs;* National Bureau of Standards, National Technical Information Service, Springfield, Virginia 22151.

• Nelson, Gary S. *Engineering—Human Factors Interface in Stairway Treadriser Design;* Texas A&M University of Texas, Agricultural Extension Service, College Station, Texas 77843, May 1973.

IV. Fall Protection References

• *Personnel Guardrails for the Prevention of Occupational Accidents,* NBSIR 76–1132; National Bureau of Standards, National Technical Information Service, Springfield, Virginia 22151, July 1976.

• *Investigation of Guardrails for the Protection of Employees from Occupational Hazards,* NBSIR 76–1139; National Bureau of Standards, National Technical Information Service, Springfield, Virginia 22151, July 1976.

• *A Model Performance Standard for Guardrails,* NBSIR 76–1131; National Bureau of Standards, National Technical Information Service, Springfield, Virginia 22151, July 1976.

• National Technical Information Services (NTIS), 5285 Port Royal Road, Springfield, VA 22161. (Telephone: (703) 605–6000; Web address: http://www.ntis.gov/.)

C. Proposed Changes to Subpart I

OSHA is proposing to add a new section to existing subpart I, Personal Protective Equipment. The new section will be numbered § 1910.140 and titled: Personal fall protection equipment. It will contain five paragraphs, covering the following topics:

Paragraph (a) will contain the scope and application for the new section.

Paragraph (b) will contain terms and definitions applicable to personal fall protection systems.

Paragraph (c) will contain general requirements applicable to all types of personal fall protection systems covered and will contain inspection requirements and design criteria common to components used in all systems.

Paragraph (d) will contain additional, specific requirements for personal fall arrest systems and will address equipment such as body harnesses, lifelines, deceleration devices (i.e., rope grabs and rip-stitch lanyards), and lanyards.

Paragraph (e) will contain additional, specific requirements for positioning device systems. This is equipment, such as a window cleaner's belt, that is used to support an employee in a work position.

In addition, OSHA proposes to add two non-mandatory appendices (C and D) to proposed § 1910.140 to help employers select appropriate equipment and use it properly. (**Note:** Existing Appendices A and B to subpart I are not affected by this rule and remain unchanged.) Proposed Appendix C provides useful information and guidance concerning the use of personal fall arrest systems. Proposed Appendix D provides examples of test methods for personal fall arrest and positioning device systems. The following discussion provides a more detailed explanation of the new provisions.

Section 1910.140 Personal Fall Protection Systems

Paragraph (a) Scope and Application

Proposed paragraph (a) explains that all personal fall protection systems used to comply with part 1910 must comply with the care and use criteria established by proposed § 1910.140.

Currently, there are a number of standards throughout part 1910 that require or permit the use of personal fall protection systems. In addition, the proposed revision of subpart D contains a number of new requirements allowing employers to choose to use personal fall protection systems in lieu of guardrail systems that are mandated under the existing rules. With few exceptions, the existing standards do not specify the criteria for the design, operation, performance, or use of fall protection systems. Without such criteria, OSHA believes there is risk that personal fall protection systems, especially personal fall *arrest* systems, will fail. Such failure may occur for a number of reasons, including: use of the wrong system (especially one that is not strong enough for its purpose); use of a system that was not inspected or tested before use; use of a system that is not rigged properly; use of a system with non-compatible components; or use of a system for which the employee is not properly trained. While the vast majority of fall protection systems currently in use meet national consensus standards, OSHA believes that, because of the absence of specific general industry standards, there is likely insufficient awareness of appropriate criteria for their use. When this rule is promulgated, employers who choose to use personal fall protection systems would have to ensure that those systems meet the criteria in this proposed provision.

Paragraph (b) Definitions

Paragraph (b) defines key terms used in the proposed standard. Most of the terms are already used in existing OSHA fall protection standards, including Appendix C of § 1910.66, Powered platforms for building maintenance, of the general industry standards; § 1926.502, Fall protection systems criteria and practices, of the construction standards; and §§ 1915.159, Personal fall arrest systems (PFAS), and 1915.160, Positioning

device systems, of the shipyard employment standards.[7] OSHA believes that employee safety will be enhanced by having the terms and definitions applicable to personal fall protection systems substantially identical whenever possible. This is particularly important because the same employees may be engaged in both general industry and construction activities. Having different meanings for the same terms could lead to confusion by employers, employees, and OSHA compliance staff. When a proposed definition differs from a definition used in the construction and shipyard employment standards, the difference is identified and explained in the discussion below.

OSHA has also reviewed the terms and definitions used in national consensus standards that are applicable to personal fall protection systems covered by the proposed rule, including ANSI/ASSE Z359.0–2007, Definitions and Nomenclature Used for Fall Protection and Fall Arrest; and other standards in the Z359 series. All of the terms and definitions used in this proposed rulemaking are based on existing OSHA standards or have their source in national consensus standards.

The following terms are defined in the proposed rule: anchorage, belt terminal, body belt, body harness, buckle, carrier, competent person, connector, D-ring, deceleration device, deceleration distance, equivalent, free fall, free fall distance, lanyard, lifeline, personal fall arrest system, personal fall protection system, positioning system, qualified person, rope grab, self-retracting lifeline/lanyard, snaphook, travel restraint (tether) line, travel restraint system, window cleaner's belt, window cleaner's belt anchor, window cleaner's positioning system, and work positioning system. Each term is discussed below.

Anchorage. OSHA proposes to define "anchorage" to mean a secure point of attachment for lifelines, lanyards, or deceleration devices. The definition is nearly identical to the definition in OSHA's general industry, construction, and the shipyard employment standards on fall protection. One variation is that the definition used in the general industry standard on fall protection goes beyond just defining the term, and also includes a requirement that the anchorage must be "independent of the means of supporting or suspending the employee." OSHA did not include this latter language in the proposed definition, but did include similar language in the appropriate requirement (*see* proposed § 1910.140(c)(12)).

The proposed definition is also consistent with the definitions in the national consensus standards, *i.e.,* ANSI/ASSE Z359.0–2007, Definitions and Nomenclature Used for Fall Protection and Fall Arrest; and ANSI/IWCA I–14.1–2001, Standard for Window Cleaning Safety; and it is identical to the definition used in ANSI/ASSE A10.32–2004, Fall Protection Systems.

Belt terminal. OSHA proposes to define "belt terminal" to mean an end attachment of a window cleaner's positioning system used for securing the belt or harness to a window cleaner's belt anchor. The term is used in the proposed requirements specific to fall protection for window cleaning operations. It is not currently defined in OSHA standards, nor is the term specifically defined in ANSI/IWCA I–14.1–2001, although its meaning is clear—that the belt terminal is the end part of a window cleaner's belt. OSHA is including the definition to clarify the intent of the requirements in proposed paragraph (e) relating to the attachment of belt terminals to window cleaner's belt anchors (window anchor). OSHA requests comment on whether this term and definition are needed to clarify the provision. That is, is the term's meaning in proposed paragraph (e) clear enough that a definition is not needed?

Body belt. OSHA proposes to define "body belt" to mean a strap with means both for securing about the waist and for attaching to other components such as a lanyard or lifeline, and that is used in positioning systems, travel restraint systems, and ladder safety systems. The definition is consistent with those in the OSHA general industry, construction, and shipyard employment standards on fall protection, as well as with the ANSI/ASSE Z359.0–2007 and ANSI/ASSE A10.32–2004 national consensus standards.

Body harness. OSHA proposes to define the term "body harness" to mean straps which may be secured about the employee in a manner to distribute the fall arrest forces over at least the thighs, pelvis, waist, chest, and shoulders with means for attaching it to other components of a personal fall arrest system. The definition is identical to the one in OSHA's general industry standards on fall protection, and nearly identical to that in the construction industry standard on fall protection. OSHA's shipyard employment standard on fall protection contains a similar definition, but that definition does not include the word "waist" in it.

The national consensus standard, ANSI/ASSE Z359.0–2007, has several definitions for various types of harnesses, including: harness, chest; harness, chest-waist; harness, evacuation; harness, full body; harness, positioning. The definition for full body harness (in section 2.74 of ANSI/ASSE Z359.0–2007) is essentially the same as the proposed subpart I definition. The proposed definition is also consistent with ANSI/IWCA I–14.1–2000, with one exception: the ANSI/IWCA consensus standard allows the use of body harnesses that permit the arresting forces to be distributed over *any combination* of the thighs, pelvis, waist, chest, and shoulders, rather than all combined. Including this phrase in the OSHA definition would allow the fall arrest forces to be distributed over the waist and chest only; therefore, OSHA has not adopted this aspect of the ANSI/IWCA consensus definition. OSHA believes the dangers of concentrating arresting forces in one anatomical area (for example, waist and chest only) are real and well documented. For example, Dr. Maurice Amphoux, *et. al.* (Ex. OSHA–S057–2006–0680–0070) conducted research into the use of thoracic harnesses for fall arrest. They concluded that these types of harnesses should not be used for fall arrest because the forces transmitted to the body during post-fall suspension constrict the rib cage and could cause asphyxiation. There is also an increased danger of falling out of the assembly.

OSHA solicits comments on this matter, as well as on whether there is a need to define other types of harnesses. For example, some types of body harnesses do not use a waist component but still distribute the forces over the torso. These harnesses have assemblies that prevent the shoulder straps from separating enough to allow the employee to fall out of the harness. OSHA does not intend to prohibit the use of this type of harness.

Buckle. OSHA proposes to define the term "buckle" to mean any device for holding the body belt or body harness closed around the employee's body. The definition is identical to the definition used in the general industry and construction standards on fall protection, and it is consistent with the ANSI/ASSE Z359.0–2007 and ANSI/ASSE A10.32–2004 national consensus standards on fall protection.

Carrier. OSHA proposes to define a "carrier" to mean the track of a ladder safety system consisting of a flexible cable or rigid rail which is secured to the ladder or structure by mountings. The definition is identical to ANSI/ALI

[7] Referred to hereafter as the "general industry, construction, and shipyard employment standards on fall protection."

A14.3–2002, American National Standards for Ladders—Fixed.

Competent person. OSHA proposes to define a "competent person" to mean a person who is capable of identifying hazardous or dangerous conditions in any personal fall protection system or any component thereof, as well as in their application and uses with related equipment. The definition is essentially the same as the one in OSHA's general industry powered platform standard (§ 1910.66), but it differs from the definition of competent person in OSHA's construction industry standard at § 1926.32. It also differs from both the ANSI/ASSE Z359.0–2007 and ANSI/ASSE A10.32–2004 national consensus standards in that the national consensus standards, like OSHA's construction industry definition, define a competent person as one who has the "authority to take prompt corrective action" to eliminate the hazards in the surroundings or working conditions.

OSHA's proposed definition does not require the competent person to have the authority to take prompt corrective action because the Agency believes that the competent person assigned to inspect personal fall protection systems serves a role different from that of the person that typically is designated as the competent person on construction jobs. In general industry the competent person will most likely be an outside contractor that specializes in fall protection, and which both designs the system, and provides training, usually at a remote location. It is unlikely that an outside contractor would be granted authority over work operations and, thus, OSHA believes the definition proposed allows the employer more flexibility in designating an appropriate competent person.

Connector. OSHA proposes to define "connector" to mean a device that is used to couple (connect) parts of the fall protection system together. The definition is essentially the same as OSHA's general industry, construction, and shipyard employment standards on fall protection. The proposed definition is also consistent with national consensus standards, including ANSI/ASSE Z359.0–2007 and ANSI/ASSE A10.32–2004. These other definitions also include some explanatory language stating that connectors may be independent components of the system, such as a carabiner; or may be integral components or parts of the system, such as a buckle or D-ring sewn into a body support (a body belt or body harness), or a snaphook spliced or sewn into a lanyard. The proposed definition does not include such explanatory language because OSHA believes it is not necessary.

D-ring. OSHA proposes to define a "D-ring" as a connector used integrally in a harness as an attachment element or fall arrest attachment, and in a lanyard, energy absorber, lifeline, and anchorage connector as an integral connector. Also, a D-ring means a connector used integrally in a positioning or travel restraint system as an attachment element. The term is not defined in existing OSHA standards but is defined, consistent with the proposed definition, in the national consensus standards ANSI/ASSE Z359.0–2007 and ANSI/ASSE A10.32–2004. ANSI/ASSE A10.32 also defines "integral" to mean not removable from the component, system, or subsystem without mutilating any element or without use of a special tool. This definition expresses OSHA's intent in using the term "integral" in the proposed definition of D-ring.

Deceleration device. OSHA proposes to define "deceleration device" to mean any mechanism that serves to dissipate energy during a fall. The definition is identical to the national consensus standard ANSI/ASSE A10.32–2004, but differs from the definition in OSHA's general industry, construction, and shipyard employment standard on fall protection. These OSHA standards expand on the definition by citing examples of devices that may be used to either dissipate a substantial amount of energy during a fall arrest, or otherwise limit the energy imposed on an employee during a fall. These devices include rope grabs, rip-stitch lanyards, specially woven lanyards, tearing and deforming lanyards, or automatic self-retracting lifelines/lanyards. ANSI/ASSE A10.32–2004 includes the same examples in its explanatory material, but not within the definition itself. ANSI/ASSE Z359.0–2007 does not define the term "deceleration device," but does define the terms "energy (shock) absorber," "fall arrester," and "self-retracting lanyard." OSHA notes that, in the preamble to the final rule for the construction industry fall protection standard (59 FR 40677), there is an extensive discussion about the definition of "deceleration device," including a discussion of commenter suggestions requesting that instead of defining the term "deceleration device," OSHA define the terms "shock absorber," "fall arrester," and "self-retracting lanyard." One of those comments was from an ANSI Z359 Committee representative:

> Comments were received on the definition of "deceleration device" [citations omitted]. It was suggested that this term be eliminated and replaced with three terms, "fall arrester," "energy absorber," and "self-retracting lifeline/lanyard" because the examples listed by OSHA in its proposed definition of deceleration device serve varying combinations of the function of these three suggested components. In particular, it was pointed out that a rope grab may or may not serve to dissipate a substantial amount of energy in and of itself. The distinction that the commenter was making was that some components of the system were "fall arresters" (purpose to stop a fall), others were "energy absorbers" (purpose to brake a fall more comfortably), and others were "self-retracting lifeline/lanyards" (purpose to take slack out of the lifeline or lanyard to minimize free fall). OSHA notes, however, that it is difficult to clearly separate all components into these three suggested categories since fall arrest (stopping) and energy absorption (braking) are closely related. In addition, many self-retracting lifeline/lanyards serve all three functions very well (a condition which the commenter labels as a "subsystem" or "hybrid component"). OSHA believes that the only practical way to accomplish what is suggested would be to have test methods and criteria for each of the three component functions. However, at this time, there are no national consensus standards or other accepted criteria for any of the three which OSHA could propose to adopt.
>
> In addition, OSHA's approach in the final standard is to address personal fall arrest equipment on a system basis. Therefore, OSHA does not have separate requirements for "fall arresters," "energy absorbers," and "self-retracting lifeline/lanyards" because it is the performance of the complete system, as assembled, which is regulated by the OSHA standard. OSHA's final standard does not preclude the voluntary standards writing bodies from developing design standards for all of the various components and is supportive of this undertaking.

OSHA invites comment on whether the Agency should remove the term "deceleration device" from subpart I and instead define the terms "fall arrester" and "energy absorber." The term "self-retracting lifeline/lanyard" is already defined in this proposed subpart I rule.

Deceleration distance. OSHA proposes to define the term "deceleration distance" to mean the vertical distance a falling employee travels before stopping, from the point at which the deceleration device begins to operate to the stopping point, excluding lifeline elongation and free fall distance. It is measured as the distance between the location of an employee's body harness attachment point at the moment of activation of the deceleration device during a fall (*i.e.,* at the onset of fall arrest forces), and the location of that attachment point after the employee comes to a full stop.

The proposed definition is identical to the definition in OSHA's general industry, construction, and shipyard employment standards on fall

protection, except that the reference to body belts has been removed. It is consistent with the ANSI/ASSE Z359.0–2007 and ANSI/ASSE A10.32–2004 consensus standards.

Equivalent. OSHA proposes to define "equivalent" to mean alternative designs, materials, or methods to protect against a hazard, which the employer can demonstrate will provide an equal or greater degree of safety for employees compared to the methods, materials, or designs specified in the standard. The proposed definition is identical to the definitions in OSHA's general industry and construction standards on fall protection. It is essentially the same as the definition in the shipyard employment standard on fall protection. A crucial element of the definition is that it places the burden on the employer to demonstrate equivalence. The term is not defined in the national consensus standards pertinent to fall protection.

Free fall. OSHA proposes to define the term "free fall" to mean the act of falling before the personal fall protection system begins to apply force to arrest the fall. The proposed definition is essentially the same as the definition in OSHA's general industry, construction, and shipyard employment standards on fall protection. It is also consistent with national consensus standards, including ANSI/ASSE Z359.0–2007 and ANSI/ASSE A10.32–2004. OSHA notes that it proposes to use the phrase personal fall *protection* system in this proposed rule, rather than personal fall *arrest* system which is used in some of the above-mentioned standards, to indicate clearly that the requirements, when the term is used, apply to both personal fall arrest systems and positioning systems.

Free fall distance. OSHA proposes to define the term "free fall distance" to mean the vertical displacement of the fall arrest attachment point on the employee's body belt or body harness between onset of the fall and just before the system begins to apply force to arrest the fall. This distance excludes deceleration distance as well as lifeline and lanyard elongation, but includes any deceleration device slide distance or self-retracting lifeline/lanyard extension before the devices operate and fall arrest forces occur. The proposed definition is essentially the same as the definition in OSHA's general industry, construction, and shipyard employment standards on fall protection. It is also consistent with the national consensus standards, ANSI/ASSE Z359.0–2007 and ANSI/ASSE A10.32–2004.

Lanyard. OSHA proposes to define the term "lanyard" to mean a flexible line of rope, wire rope, or strap which generally has a connector at each end for connecting the body belt or body harness to a deceleration device, lifeline, or anchorage. The proposed definition is identical to the definition in OSHA's construction and shipyard employment standards on fall protection, and is consistent with the general industry standard on fall protection. It is also essentially the same as the national consensus standards, ANSI/ASSE Z359.0–2007 and ANSI/ASSE A10.32–2004.

Lifeline. OSHA proposes to define a "lifeline" to mean a component consisting of a flexible line for connection to an anchorage at one end to hang vertically (vertical lifeline), or for connection to anchorages at both ends to stretch horizontally (horizontal lifeline), and which serves as a means for connecting other components of a personal fall protection system to the anchorage(s). The proposed definition is essentially the same as OSHA's general industry, construction, and shipyard employment standards on fall protection. Those standards use the words "fall arrest" rather than "fall protection" as used in this proposed rule because they were only applicable to fall arrest systems whereas this proposed rule has application to other personal fall protection systems. It is also essentially the same as the national consensus standards ANSI/ASSE Z359.0–2007 and ANSI/ASSE A10.32–2004.

Personal fall arrest system. OSHA proposes to define the term "personal fall arrest system" to mean a system used to arrest an employee in a fall from a work level. It consists of an anchorage, connector, and a body harness, and may include a lanyard, deceleration device, lifeline, or suitable combination of these. The definition proposed is identical to OSHA's general industry, construction, and shipyard employment standards on fall protection, except that those standards included a body belt as a part of the definition of a personal fall arrest system. Body belts, which have been phased out due to safety reasons, were included in those definitions to allow their use until they were banned. The ban on body belts as part of a personal fall arrest system, took place on January 1, 1998, for the construction industry and shipyard employment. The proposed definition is also consistent with the national consensus standards, ANSI/ASSE Z359.0–2007 and ANSI/ASSE A10.32–2004. These consensus standards, like the existing OSHA standards and the proposed standard, require the use of body harnesses in personal fall arrest systems. OSHA notes that a ladder safety system is not considered a *personal fall arrest* system within the meaning of this proposed definition even though it is designed to arrest a fall. Therefore, the use of a body belt in a ladder safety system is permitted.

Personal fall protection system. OSHA proposes to define the term "personal fall protection system" to mean a system used to protect an employee from falling, or that safely arrests an employee's fall, should a fall occur. Examples include: a personal fall arrest system, a positioning system, or a travel restraint system. The term is not defined in either the existing OSHA standards or in the national consensus standards.

Positioning system (sometimes called a work positioning system). OSHA proposes to define the term "positioning system" to mean a system of equipment and connectors that, when used with its body belt or body harness, allows an employee to be supported on an elevated vertical surface, such as a wall or windowsill, and to work with both hands free. The proposed definition is essentially the same as the definition in OSHA's construction and shipyard employment standards on fall protection. It is also essentially the same as the national consensus standards, ANSI/ASSE Z359.0–2007 and ANSI/ASSE A10.32–2004.

Qualified. The proposed definition of "qualified" describes a person who, by possession of a recognized degree, certificate, or professional standing, or who by extensive knowledge, training,[8] and experience has successfully demonstrated the ability to solve or resolve problems relating to the subject matter, the work, or the project. The proposed definition is consistent with the definition in the OSHA's construction industry standards at § 1926.32(m), and the shipyard employment standard for PPE at § 1915.151(b). It is also consistent with the definition being proposed today for the general industry standards in subpart D, Walking-Working Surfaces. The definition differs from that used in the general industry standard at § 1910.66. Specifically, the definition in Appendix C of § 1910.66 requires that the qualified person have a degree, certification or professional standing *and* (as opposed to "or") also have extensive knowledge, training, and experience. To meet the definition, a person would most likely need to be an engineer; this is not the case with the definition proposed in this standard. Like the definition in the construction

[8] "Training" may include informal, or on-the-job, training.

and the shipyard employment rules, OSHA is emphasizing the need to be qualified in the subject matter—personal fall protection systems—which, in some cases, may involve their design and use. As long as the individual meets the elements of the definition, he or she may be considered a qualified person for the purpose of subpart I. The proposed definition is also identical to that used in the national consensus standard, ANSI/ASSE A10.32, but differs from ANSI/ASSE Z359.0–2007 standard which also appears to require that the qualified person be an engineer. The language proposed here will ensure consistency with the definitions in OSHA's fall protection rules for construction and shipyard employment.

Rope grab. OSHA proposes to define the term "rope grab" to mean a deceleration device that travels on a lifeline and automatically, by friction, engages the lifeline and locks to arrest the fall of an employee. A rope grab usually employs the principle of inertial locking, cam/lever locking, or both. The definition proposed is the same as the definition in OSHA's general industry, construction, and shipyard employment standards on fall protection. It is also the same as the national consensus standard, ANSI/ASSE A10.32–2004. The term "rope grab" is not individually defined in ANSI/ASSE Z359.0–2007; however, that consensus standard defines the term "fall arrester" using essentially the same definition OSHA uses here. Additionally, the consensus standard identifies a "rope grab" as one example of a fall arrester.

Self-retracting lifeline/lanyard. OSHA proposes to define the term "self-retracting lifeline/lanyard" to mean a deceleration device containing a drum-wound line which can be slowly extracted from, or retracted onto, the drum under slight tension during normal movement by the employee, and after onset of a fall, automatically locks the drum and arrests the fall. The proposed definition is consistent with the definition in OSHA's general industry and construction standards on fall protection, and is also consistent with the national consensus standards, ANSI/ASSE Z359.0–2007 and ANSI/ASSE A10.32–2004. OSHA notes that the ANSI/ASSE Z359.0 standard defines the term "self-retracting lanyard" rather than "self-retracting lifeline/lanyard."

Snaphook. OSHA proposes to define a "snaphook" to mean a connector comprised of a hook-shaped body with a normally closed gate or similar arrangement that may be manually opened to permit the hook to receive an object and that, when released, automatically closes and locks to retain the object. Opening the snaphook requires two separate actions. The proposed definition includes a note explaining that there are two types of snaphooks—the *locking type* (also called self-locking, double-locking, or automatic-locking) and the *non-locking type* (or manual locking). The locking type snaphook is one with a self-closing and self-locking gate that remains closed and locked until intentionally unlocked and opened for connection or disconnection. The non-locking type has a self-closing gate that remains closed, but not locked (unless purposely locked by the user), until intentionally opened for connection or disconnection. This rule would not allow use of non-locking type snaphooks.

The proposed definition is consistent with OSHA's general industry and construction standards on fall protection, and is also consistent with the national consensus standards ANSI/ASSE Z359.1–2007 and ANSI/ASSE A10.32–2004. These other OSHA standards also only allow use of locking-type snaphooks.

Travel restraint (tether) line. The proposed definition of the term "travel restraint line" is a rope, wire rope, or lanyard used to transfer forces from a body support to an anchorage or anchorage connector in a travel restraint system. The proposed definition is new to general industry and is based on the ANSI/ASSE Z359.0–2007 standard, and is consistent with the similar term "restraint (tether) line" used in OSHA's shipyard employment standard on fall protection and in the national consensus standard, ANSI/ASSE A10.32–2004. The purpose of a travel restraint line is to prevent an employee from reaching a fall hazard. These lines need not be designed to withstand forces resulting from a fall. (*See* "travel restraint system.")

Travel restraint system. OSHA proposes to define the term "travel restraint system" to mean a combination of an anchorage, anchorage connector, lanyard (or other means of connection), and body support intended to be used by an employee to limit travel in such a manner as to prevent exposure to a fall hazard. Travel restraint systems must be used such that they do not support any portion of the employee's weight. The proposed definition is new to the general industry standards, and is based on the ANSI/ASSE Z359.0–2007 standard, and is consistent with similar terms (*i.e.,* "restraint (tether) line") used in OSHA's shipyard employment standard on fall protection and in the national consensus standard, ANSI/ASSE A10.32–2004. The term is not defined in the OSHA's construction industry standard on fall protection.

Window cleaner's positioning system. OSHA proposes to define the term "window cleaner's positioning system" to mean a system consisting of a window cleaner's belt and window cleaner's belt anchors.

Window cleaner's belt. OSHA proposes to define the term "window cleaner's belt" to mean a belt that consists of a waist-belt, an integral terminal runner or strap, and belt terminals. The end terminals of the belt are attached to the window cleaner's belt anchors (window anchors).

Window cleaner's belt anchors (window anchors). OSHA proposes to define "window cleaner's belt anchors" to mean specifically designed fall-preventing attachment points, permanently affixed to a window frame or to a building part immediately adjacent to the window frame, for direct attachment of the terminal portion of a window cleaner's belt. The proposed definitions of terms related to window cleaner's fall protection systems are based on the national consensus standard for Window Cleaning Safety, IWCA I–14.1–2001. The term "belt terminal" which is also a part of the window cleaner's belt was discussed above. These terms are not used in existing OSHA standards because there are no standards specifically applicable to window cleaning operations.

Paragraph (c) General Requirements

Proposed paragraph (c) contains general provisions applicable to all personal fall protection systems. This proposed paragraph establishes criteria for the most generic, common components, such as belts, lanyards, and harnesses used in fall protection systems. More specific criteria are established in proposed paragraphs (d) and (e) of § 1910.140 for personal fall arrest and positioning systems. All of the provisions proposed in paragraph (c) are based on requirements in either existing OSHA standards pertinent to fall protection or national consensus standards. The OSHA standards used include Appendix C of § 1910.66, Powered platforms for building maintenance, of the general industry standards; § 1926.502, Fall protection systems criteria and practices, of the construction standards; and §§ 1915.159, Personal fall arrest systems (PFAS), and 1915.160, Positioning device systems, of the shipyard employment standards.[9] The national

[9] Referred to hereafter as the "general industry, construction, and shipyard employment standards on fall protection."

consensus standards used in developing proposed paragraph (c) include ANSI/ASME Z359.1–2007, Safety Requirements for Personal Fall Arrest Systems, Subsystems and Components; ANSI/ASME Z359.3, Safety Requirements for Positioning and Travel Restraint Systems; ANSI/ASME A10.32–2004, Fall Protection Systems (for Construction); and ANSI/IWCA I–14.1–2001, Window Cleaning Safety.

In paragraphs (c)(1) and (c)(2), OSHA is proposing that connectors used in personal fall protection systems be made of drop-forged, pressed, or formed steel or equivalent materials, and that the materials be protected from corrosion. In addition, the surfaces and edges of connectors are to be smooth. These requirements are intended to ensure that connectors retain the necessary strength characteristics for the life of the fall protection system under expected use conditions and that the surfaces and edges do not cause damage to the attached belt or lanyard. OSHA has already adopted this approach in paragraphs (c)(1) and (c)(2), section I, Appendix C of § 1910.66; paragraphs (d)(1), (d)(2), (e)(3), and (e)(4) of § 1926.502; and paragraphs (a)(1) and (a)(2) of § 1915.159. Similar requirements are also found in the national consensus standards, ANSI/ASSE Z359.1–1992 (R2002) and ANSI/ASSE A10.32–2004.

In paragraph (c)(3) OSHA is proposing that where vertical lifelines are used, each employee must be attached to a separate lifeline. OSHA believes that allowing more than one employee on the same vertical lifeline would create additional hazards. For example, if one employee fell, the other attached employee might be pulled off balance, causing him or her to fall. OSHA has already adopted this approach in paragraphs (c)(3) and (e)(5), section I, Appendix C of § 1910.66; paragraph (d)(10) of § 1926.502; and paragraph (b)(1) of § 1915.159. A similar requirement is also found in the national consensus standard, ANSI/ASSE A10.32–2004.

Proposed paragraphs (c)(4) through (c)(6) relate to the strength of lanyards and lifelines. In paragraph (c)(4) OSHA is proposing that lanyards and vertical lifelines have a minimum breaking strength of 5,000 pounds (22.2 kN). Paragraphs (c)(5) and (c)(6) address self-retracting lifelines and lanyards. In paragraph (c)(5) OSHA proposes that self-retracting lifelines and lanyards that limit free fall to 2 feet (0.61 m) or less be capable of sustaining a minimum tensile load of 3,000 pounds. In paragraph (c)(6) OSHA proposes that self-retracting lifelines and lanyards that do not limit free fall to 2 feet (0.61 m) or less, as well as rip-stitch lanyards, and tearing and deforming lanyards must be capable of sustaining a minimum tensile load of 5,000 pounds. The different strengths are appropriate because the dynamic forces associated with falls increase with the distance of the free fall, and OSHA believes the proposed levels provide a reasonable factor of safety. OSHA has already adopted this approach in the general industry, construction, and shipyard employment standards on fall protection. The proposed requirements are also consistent with the requirements in ANSI/ASSE Z359.1–2007 and ANSI/ASSE A10.32–2004. However, neither of the consensus standards contain a separate provision (as OSHA does in proposed paragraph (c)(6)) directed to self-retracting lanyards and lifelines that *do not* limit free fall to 2 feet or less. OSHA requests specific comment on whether the requirement in paragraph proposed (c)(6) is necessary, since it is essentially the same as the requirement in proposed paragraph (c)(4). That is, if OSHA did not finalize the requirement proposed at paragraph (c)(6), would it be clear from (c)(4) that all lanyards and lifelines, except those that limit free fall to 2 feet or less, must have a breaking strength of 5,000 pounds?

One commenter to the 1990 proposal suggested that the high strength requirements for lanyards and lifelines would be hard to maintain. OSHA realizes some wear will occur during normal use of lanyards and lifelines in the workplace. Ultraviolet radiation, water, and dirt reduce the strength of lanyards and lifelines. However, wear must never be allowed to reach the point where equipment performance might be compromised. This is one reason why it is important to inspect equipment before each use (and, if necessary, remove it from use) as required in proposed paragraph (c)(18), and to protect certain components, including lanyards, from being cut, abraded, or melted, as required in proposed paragraph (c)(20).

Another concern related to strength reduction is the use of knots in lanyards and lifelines. OSHA is aware that the use of knots in lanyards and vertical lifelines can *sometimes* reduce breaking strength. For this reason, OSHA considered proposing a ban on knots, with the exception of knots at the ends of the components. Such a ban would be consistent with requirements in the national consensus standards. For example, ANSI/ASSE Z359.1–2007 (section 7.2.1) prohibits knots, stating, "No knots shall be tied in lanyards, lifelines, or anchorage connectors. Sliding-hitch knots shall not be used in lieu of fall arresters." Likewise, ANSI/ASSE A10.32–2004 (section 3.7.3) prohibits the use of knots, except as a "stop" at the end of a lifeline. Rather than proposing an outright ban on the use of knots, OSHA is requesting comments on whether it should prohibit knots or require that a competent person inspect all knots. Commenters should provide suggested language and rationale to support their positions.

Comments and testimony from the 1990 rulemaking on the use of knots both supported and objected to the use of knots. For example, some commenters (Exs. OSHA–S057–2006–0680–0048, –0083, and –0061) objected to the use of knots and suggested that OSHA require that ends of lanyards and lifelines be terminated in swedges or splices. These commenters felt that knots significantly reduced the strength of the line and that it is difficult for employees to learn to tie reliably.

Other commenters (Ex. OSHA–S057–2006–0680–0118) supported the use of knots, reasoning that some knots will retain up to 90 percent of the original rope strength. Commenters also noted that some ropes could lose more than 10 percent of their original breaking strength and still meet OSHA's proposed 5,000 pound (22.2 kN) requirement. Testimony at the public hearing also supported the idea that knots could be used to terminate lifelines and lanyards safely (Ex. OSHA–S041–2006–0666–1252, p. 389–391, 416–419). The proposal reflects the information currently available to the Agency—that knots can be used safely in some circumstances, so employers should be allowed the flexibility to use knots as long as they verify that proposed strength requirements for the entire rope have been met.

Proposed paragraphs (c)(7) through (c)(10) establish criteria for D-rings and snaphooks. In paragraph (c)(7) OSHA is proposing that D-rings and snaphooks be capable of sustaining a minimum tensile load of 5,000 pounds (22.2 kN). In paragraph (c)(8), OSHA proposes that all D-rings and snaphooks be proof-tested to 3,600 pounds (16 kN) without cracking, breaking, or incurring permanent deformation. The 3,600 pounds (16 kN) criterion is based on the need to meet a 2:1 safety factor for the use of these components with body harnesses (which limit maximum arresting forces to 1,800 pounds (8 kN)). OSHA has already adopted this approach in the general industry, construction, and shipyard employment standards on fall protection. Similar requirements are also found in the

national consensus standards, ANSI/ASSE Z359.1–2007 and ANSI/ASSE A10.32–2004.

In paragraph (c)(9) OSHA proposes to require the use of locking snaphooks, thus prohibiting non-locking snaphooks for any personal fall protection systems. Locking snaphooks require two separate, consecutive actions to open, which reduces the likelihood of inadvertent opening. OSHA has already adopted this approach in the construction and shipyard employment standards on fall protection. The prohibition on the use of non-locking snaphooks in existing OSHA standards for the construction and shipyard employment sectors went into effect on January 1, 1998. In addition, national consensus standards, including ANSI/ASSE Z359.1–2007 and ANSI/ASSE A10.32–2004, only permit the use of locking snaphooks. Evidence in the 1990 rulemaking also showed widespread support for a prohibition on non-locking snaphooks, which is particularly significant in light of the fact that these comments were made more than 17 years ago. Therefore, OSHA believes that there is no reason to propose any type of extended or delayed effective date for this provision. If there are reasons for an extended or delayed effective date, they should be submitted to the record.

Paragraph (c)(10), like other existing OSHA standards, proposes to require that, unless the snaphook is designed for the following connections, it shall not be engaged directly to: webbing, rope, or wire rope; another snaphook; a D-ring to which another snaphook or connector is attached; a horizontal lifeline; or any object that is incompatibly shaped or dimensioned in relation to the snaphook such that unintentional disengagement could occur if the connected object depresses the snaphook gate and causes it to open. OSHA has already adopted this approach in the construction and shipyard employment standards on fall protection. Both ANSI/ASSE Z359.1–2007 and ANSI/ASSE A10.32–2004 consensus standards also contain a number of separate requirements prohibiting these connections. In addition, section 7.2 (Equipment Rigging and Use) of ANSI/ASSE Z359.1 addresses snaphook and carabiner connections and other concerns. Explanatory notes in that section contain additional, helpful material about connections.

In paragraph (c)(11) OSHA proposes to require that horizontal lifelines be designed, installed, and used under the supervision of a qualified person, and that they be part of a complete personal fall arrest system that maintains a safety factor of two. OSHA believes the safety factor of two provides adequate protection and has already adopted this approach in the general industry, construction, and shipyard employment standards on fall protection. An essentially similar requirement is also found in the national consensus standard, ANSI/ASSE A10.32–2004. The other consensus standard pertinent to fall protection, ANSI/ASSE Z359.1–2007, does not include specific requirements for horizontal lifelines because the standard does not cover them. However, the Z359.1 standard (section 3.1.4) states, "A PFAS [personal fall protection system] which incorporates a horizontal lifeline (outside the scope of this standard) shall be evaluated in accordance with acceptable engineering practice to determine that such system will perform as intended." OSHA notes that horizontal lifelines present special problems in application. For example, they allow a potentially longer fall distance than some other fall protection devices. In addition, forces applied in a perpendicular direction to a horizontal lifeline create much larger forces at the anchorages. These and other concerns relative to the use of horizontal lifelines support the need for proposed paragraph (c)(11). As a point of clarification, OSHA notes that there could be more than one qualified person involved in the process; *i.e.,* the qualified person who designs and installs the system may be different than the qualified person who supervises the use of the system.

In paragraph (c)(12) OSHA proposes to require that anchorages used for attachment to personal fall protection equipment be independent of any anchorage being used to support or suspend platforms. This requirement is intended to ensure that if the anchorage holding other equipment (such as a powered platform) fails, the employee will be still be protected by the separate, independent anchorage to which the fall protection system is secured.

In paragraph (c)(13), OSHA proposes that anchorages be capable of supporting at least 5,000 pounds (22.2 kN) for each employee attached or that they be designed, installed, and used under the supervision of a qualified person as part of a complete fall protection system maintaining a safety factor of two. The proposed provision does not apply to window cleaner's belt anchors, addressed separately in proposed paragraph (e) of this section, because those positioning systems are unique. OSHA has already adopted the approach proposed here in the general industry, construction, and shipyard employment standards for fall protection. Similar requirements are also found in the national consensus standards pertinent to fall protection, including ANSI/ASSE Z359.1–2007 and ANSI/ASSE A10.32–2004, as well as the ANSI/IWCA I–14.1–2001 standard for window-cleaning safety. In particular, section 7.2.3 of the Z359.1 standard states:

> Anchorages selected for PFAS shall have a strength capable of sustaining static loads, applied in the directions permitted by the PFAS, of at least: (a) two times the maximum arrest force permitted on the system, or (b) 5,000 pounds (22.2kN) in the absence of certification. When more than one PFAS is attached to an anchorage, the anchorage strengths set forth in (a) and (b) above shall be multiplied by the number of personal fall arrest systems attached to the anchorage.

In the explanatory material for this provision, ANSI notes: "The 5,000 pound (22.2kN) anchorage referred to here is the same as that required by OSHA in § 1910.66—Powered platforms for building maintenance. An assumption is made that the 5,000 pound (22.2kN) strength level has been established and, therefore, certification is not required."

The strength of fall protection anchorages has generated considerable comment in previous OSHA rulemakings. OSHA's position at this time is the same as it was in the earlier rulemakings: the level of strength required by this proposal is necessary to provide a reasonable margin of safety for employees. For clarification, OSHA notes that it is not requiring a 5,000 pound (22.2 kN) anchorage point in every situation. If an employer cannot find or develop an anchor point capable of supporting a 5,000 pound (22.2 kN) load, then an anchor point of lesser strength may be used *only if* it is both part of a complete fall protection system maintaining a safety factor of at least two, and it is designed, installed, and used under the supervision of a qualified person. The Agency anticipates that employers who cannot achieve a 5,000 pound (22.2 kN) anchorage strength will be able to meet the two to one safety factor. As OSHA noted above with respect to proposed paragraph (c)(11), an employer may use more than one qualified person to comply with this requirement. For example, some employers may choose to have an outside firm design an appropriate system, and an in-house qualified person supervise its use.

In paragraph (c)(14) OSHA proposes that restraint lines used in travel restraint systems be capable of supporting at least a 5,000 pound (13.3

kN) tensile load. The Agency is proposing the 5,000 pound requirement to be consistent with other requirements in this section. (For example, *see* proposed paragraphs (c)(4), (c)(6), and (c)(7).) This requirement provides an important safety factor if a restraint line is ever used as a lifeline; for example, if it is not rigged properly and a fall occurs, the restraint line would effectively become a lifeline and would have to meet the 5,000 pound requirement. Existing OSHA standards pertinent to fall protection do not include specific requirements for travel restraint lines, but section 3.11 of the ANSI/ASSE A10.32–2004 standard specifies that component parts of travel restraint systems, including anchorages, be designed to meet the requirements of personal fall arrest equipment. The ANSI/ASSE Z359.3–2007 standard for positioning and travel restraint systems similarly requires that positioning and travel restraint lanyards have a minimum breaking strength of 5,000 pounds (22.2kN).

In paragraph (c)(15) OSHA proposes to require that lifelines and carriers be made of materials other than natural fiber rope. Additionally, proposed (c)(15) requires that where polypropylene rope is used, it must contain an ultraviolet (UV) light inhibitor. The proposed provision is consistent with OSHA's general industry standard on powered platforms and the shipyard employment standard. Both of these standards require that ropes and straps (webbing) used in lanyards, lifelines, and strength components of body belts and body harnesses be made from synthetic fibers or wire rope. OSHA's construction industry standard is the same except that it does not make reference to wire rope.

None of the existing OSHA standards, however, address carriers, nor do they require that the polypropylene rope contain a UV light inhibitor. The proposed provision is consistent with requirements in section 3.2.3 of ANSI/ASSE Z359.1–2007 and with section 3.8 of ANSI/ASSE A10.32–2004. Section 6.8 of the national consensus standard for window-cleaning safety, ANSI/IWCA I–14.1–2001, prohibits ropes made entirely of polypropylene. Also, section 14.2.3 of ANSI/IWCA I–14.1–2001 standard requires all rope and webbing used in suspending the seat board (of rope descent systems) be synthetic fiber, preferably nylon or polyester, with a rated strength of 5,000 pounds. For fall protection, the ANSI/IWCA I–14.1–2001 standard requires compliance with ANSI/ASSE Z359.1 standard.

The UV light inhibitor provision was added to this proposal in response to comments received in the 1990 proposed rulemaking (Ex. OSHA–S057–2006–0680–0083), pointing out that sunlight can cause severe deterioration in polypropylene rope. OSHA recognizes that ultraviolet degradation can be a serious problem, but also believes that polypropylene rope has some advantages over other synthetic materials. Polypropylene is strong, flexible, and may be less costly than ropes made of some other materials. Many of the newer polypropylene ropes are made with an UV light inhibitor which reduces the strength degradation problem. For these reasons, the Agency believes the proposed provision offers an appropriate level of safety without unnecessarily sacrificing flexibility.

In paragraph (c)(16), OSHA proposes that all personal fall protection systems and their components be used for employee fall protection only, and not for any other purpose, such as hoisting equipment or materials. This means that those systems or components may not be used as material or equipment hoist slings, bundle ties, or for other such purposes. OSHA has already adopted this approach in its general industry, construction, and shipyard employment standards on fall protection. In the powered platform standard, OSHA did not include the phrase "and not used to hoist materials," which appears in the shipyard employment and construction standards. OSHA believes the added phrase clarifies the intent of the provision.

In paragraph (c)(17), OSHA proposes that all fall protection systems or any of their components that have been subjected to impact loading (as distinguished from static load testing) be removed from service immediately. A removed system or component may not be used again until a competent person inspects the equipment and determines that it is undamaged and suitable for reuse. By this proposed language, OSHA is recognizing that impact loading may adversely affect the integrity of a fall protection system, but that there are many factors that can affect a system's potential capacity for reuse as fall protection. These include the employee's weight and the type of deceleration device used, among others. This proposed provision is intended to ensure that employers will implement procedures for inspection and evaluation of equipment that will prevent the reuse of damaged equipment. OSHA has not, however, adopted the suggestion of one commenter in the 1990 proposed rulemaking (Ex. OSHA–S057–2006–0680–0048) that the standard allow only the *manufacturer* to inspect systems to determine if they are suitable for reuse. OSHA believes that any competent person could inspect the system effectively because all competent persons must be capable of determining dangerous or hazardous conditions in any fall protection system or component. OSHA has already adopted the proposed approach in the general industry, construction, and shipyard employment standards on fall protection. The proposed requirement is also consistent with the ANSI/ASSE Z359.1–2007 (section 5.3.4) and ANSI/ASSE A10.32–2004 (section 3.4) consensus standards.

OSHA solicits comments on whether the proposed approach provides adequate protection, or whether the final standard should require the destruction of ropes, lanyards, belts, and harnesses once they have been subjected to impact loading. Impact loading can cause damage to fibers that cannot be easily discovered, and these components are relatively inexpensive. OSHA is therefore still considering revising the proposed requirement to require the destruction and removal of ropes, lanyards, belts, and harnesses once they have been subject to impact loading.

In paragraph (c)(18) OSHA proposes that fall protection equipment be inspected for mildew, wear, damage, and other deterioration before each use. Components showing such damage must be removed from service if their function or strength has been adversely affected. The intent of this requirement, like that of proposed paragraph (c)(17), is to ensure that defective or weakened equipment is removed from service if the equipment's performance could be adversely affected. OSHA has already adopted this approach in its general industry, construction, and shipyard employment standards on fall protection. The proposal is also consistent with the consensus standards, ANSI/ASSE Z359.1–2007 (section 6.1) and ANSI/ASSE A10.32–2004 (section 6.3).

In paragraph (c)(19), OSHA proposes that ropes, belts, lanyards, lifelines, and harnesses be compatible with all connectors used. OSHA is proposing this requirement because it believes the use of incompatible equipment leads to rollout. Rollout is a process by which a snaphook or carabiner unintentionally disengages from another connector or object to which it is coupled, possibly resulting in injury or death. OSHA has already adopted this approach in its shipyard employment standards on fall protection. Additionally, both the ANSI/

ASSE Z359.1–2007 and ANSI/ASSE A10.32–2004 consensus standards address the need for compatibility of equipment. For example, the explanatory material for section 3.2.6.2 of the Z359.1 standard states, "An effort should be made to encourage compatible connector couplings." Requirements in sections 7.1 and 7.2 of that standard also address the issue of compatibility, as do requirements in the ANSI/ASSE A10.32–2004 standard (sections 4.1.1 and 4.4.2).

In paragraph (c)(20), OSHA proposes that ropes, belts, lanyards, and harnesses used for personal fall protection be protected from being cut, abraded, melted, or otherwise damaged. These types of damage could cause the components to lose strength and fail. OSHA has already partially adopted this approach in its construction and shipyard employment standards on fall protection. The general industry standard on fall protection for powered platforms provides guidelines (*see* Appendix C, section III, paragraph (f) of § 1910.66) for the inspection of personal fall arrest equipment, and emphasizes the need to remove equipment that has been subject to cuts, abrasion, and other damage. Similar provisions are found in ANSI/ASSE Z359.1–2007 (section 7) and ANSI/ASSE A10.32–2004 (section 3.7) standards pertinent to lifelines and lanyards. The existing OSHA requirements apply to lifelines and lanyards only, whereas the proposed requirement would apply to all ropes, belts, and harnesses because OSHA believes all of these components should be protected from being cut, abraded, melted or exposed to similar hazards.

Because an employee suspended after a fall may be exposed to serious injury, including suspension trauma, OSHA is proposing in paragraph(c)(21) to require the employer to provide for prompt rescue. To meet this requirement, the employer must evaluate the availability of rescue personnel, ladders, or other rescue equipment. In some situations, it may be appropriate to use equipment; for example, a mechanical device that has descent capability which allows employees to rescue themselves after a fall has been arrested. In other situations, a suspended employee may not be able to reach a work level independently, so the employer must ensure the ability to rescue the employee promptly.

In recognition of hazards confronting employees, OSHA developed a Safety and Health Information Bulletin (SHIB) addressing the hazards associated with suspension trauma/orthostatic intolerance (SHIB 03–24–2004, available at *http://www.osha.gov/dts/shib/shib032404.html).* The SHIB states in part:

> Orthostatic intolerance may be experienced by workers using fall arrest systems. Following a fall, a worker may remain suspended in a harness. The sustained immobility may lead to a state of unconsciousness. Depending on the length of time the suspended worker is unconscious/immobile and the level of venous pooling, the resulting orthostatic intolerance may lead to death. While not common, such fatalities often are referred to as "harness-induced pathology" or "suspension trauma."

OSHA has already adopted this approach in the general industry, construction, and shipyard employment standards on fall protection. The proposal is also consistent with the national consensus standard, ANSI/ASSE A10.32–2004 (section 6.2.1). Additionally, section 7.3 of the ANSI/ASSE Z359.1–2007 standard addresses the need to be trained in rescue. Finally, the need for rescue is evident by the development of a new American National Standard entitled "Safety Requirements for Assisted-Rescue and Self-Rescue Systems, ANSI/ASSE Z359.4–2007."

In paragraph (c)(22), OSHA proposes to require all personal fall protection systems to be worn with the attachment point in the center of the wearer's back near the shoulder level or above the wearer's head. An exception is provided that allows the attachment point to be located in the pre-sternal position if the free fall distance is limited to 2 feet (0.6 m) or less and the fall arrest forces are limited to 900 pounds (4 kN). OSHA has already adopted this approach in the general industry, construction, and shipyard employment standards on fall protection, except that none of these OSHA standards permit the attachment point to be located in the pre-sternal position. The exception for the pre-sternal position proposed in this standard reflects the new language in ANSI/ASSE Z359.1–2007 (section 3.2.2.5a). The proposal is also consistent with ANSI/IWCA I–14.1–2001.

OSHA believes the exception is necessary to allow flexibility to attach in front during certain activities (such as climbing or using rope descent systems for window washing) are underway to make self-rescue possible, as some commenters argued in the 1990 proposed rulemaking. One witness, Mr. Terry Schmidt, testified that European standards already allowed an attachment point in the pre-sternal position (Ex. OSHA–S041–2006–0666–1252, p. 216). Another witness, Mr. Weinel, commented:

> I'm very much a believer in the front, I think the term used was "mid-sternal" connection. This will keep me, as the person in trouble, oriented upright, facing the rope, where I can perform self-rescue. (Tr. 363.)

OSHA believes that an attachment point in the pre-sternal position (when the free fall distance is limited to 2 feet (0.6 m) or less) would have only a minimal effect on the distribution of arresting forces, yet would provide an overall advantage of easier self-rescue in some specialized applications such as confined spaces, window cleaning, and climbing activities. Again, the location of the attachment point in the pre-sternal position is limited to those situations in which the free fall distance is kept to 2 feet (0.6 m) or less and the maximum arresting forces are limited to 900 pounds (4 kN), thereby reducing risk of serious neck and back injury.

Paragraph (d) Personal Fall Arrest Systems

Proposed paragraph (d) establishes specific requirements applicable when personal *fall arrest* systems are used. These new, specific requirements are in addition to the general requirements in proposed paragraph (c) that apply to all types of personal fall protection equipment. The proposed requirements are consistent with the national consensus standards, ANSI/ASSE Z359.1–2007 (section 3) and ANSI/ASSE A10.32–2004.

Proposed paragraph (d)(1) establishes criteria for the *performance* of personal fall arrest systems. Proposed paragraph (d)(2) establishes criteria for the *use* of personal fall arrest systems. The requirements proposed in paragraph (d) are based on requirements in existing OSHA general industry, construction, and shipyard employment standards on fall protection, as well as national consensus standards, including ANSI/ASME Z359.1–2007, Safety Requirements for Personal Fall Arrest Systems, Subsystems and Components; and ANSI/ASME A10.32–2004, Fall Protection Systems (for construction) standards.

The performance criteria proposed in paragraph (d)(1) are nearly identical to those that are already required by other OSHA fall protection standards. For the most part, they were first promulgated by OSHA in Appendix C to § 1910.66 (*see* 54 FR 31445, July 28, 1989). The preamble to that standard anticipated that those criteria would eventually be used in a more broadly applicable general industry standard:

> The comments and data on fall arrest systems which were submitted to the record of the powered platforms rulemaking are also being used in the development of the generic rule. OSHA anticipates that the provisions on personal fall arrest systems in Appendix C,

section I, of the powered platforms standard will be consistent with the proposed requirements for those systems in the proposed generic rule. (54 FR 31450)

The preamble also provides detailed explanations of the performance criteria proposed here, and of their bases.

Proposed paragraph (d)(1)(i) limits the maximum arresting force on an employee to 1,800 pounds (8 kN) when a body harness is used. The maximum arrest force of 1,800 pounds (8 kN) criterion is discussed extensively in the preamble to the final rulemaking for § 1910.66. In this preamble, OSHA noted that the proposal (at 50 FR 2890) included "a force limit of 10 times the worker's weight or 1,800 pounds (8 kN) whichever is less," and that "[t]his was consistent with ANSI A10.14–1975 (Ex. 11–1), and a NBS [National Bureau of Standards, now the National Institute for Science and Technology] report (Ex. 11–2)." OSHA also described in the final rule (at 54 FR 31450) a comment from the United States Technical Advisory Group (USTAG), an advisory group representing both government and private interests:

USTAG recommended that maximum arrest force for body belts not exceed 900 pounds. USTAG states that "empirical data from impact loading of humans and animals suggests that injury threshold may be in the neighborhood of 10 g's or even lower depending on many variables" (Ex 8–33). USTAG cited British standards which restrict the use of body belts to 5 g's for a 180 pound (82 kg) person (the equivalent of 900 pounds (4 kN) of force). Based on the record, OSHA agrees with USTAG that a maximum arresting force of 1,800 pounds (8 kN) is acceptable when using a body harness but not acceptable when using a body belt.

OSHA notes that USTAG's recommendation applied to the maximum permitted force for positioning systems, not to fall arrest equipment * * * however, that there is no reason to distinguish these applications in terms of the permitted force limit.

(*See* 54 FR 31450.)

At the time § 1910.66 was promulgated, the ANSI Z359.1–1992 standard covering personal fall arrest systems did not yet exist. When the ANSI standard was published in 1992 and reaffirmed in 2002, it contained (section 3.1.2) the same requirement limiting maximum arresting forces to 1,800 pounds (8 kN) when a body harness was used in the personal fall arrest system. Both the 1992 and 2002 ANSI standards provide the following explanation of the 1,800-pound (8-kN) maximum arresting force (MAF) limit:

E3.1.2 * * * The 1,800 pound (8 kN) MAF criteria included in this standard is based on the following considerations. In the mid-1970's medical information developed in France confirmed earlier United States research which observed that approximately 2,700 pounds (12 kN) is the threshold of significant injury incidence for physically fit individuals subjected to drop impacts when wearing harnesses. The French arbitrarily halved the above force and established 1,350 pounds (6 kN) as their national standard for MAF in PFAS. Canada's Ontario Ministry of Labor reviewed this information and elected to establish 1,800 pounds (8 kN) for MAF. This MAF has been in effect since 1979 in the Ontario Provincial standard. Since that time there have been no reported deaths or serious injuries associated with the arresting of accidental falls of individuals. In addition, ISO/TC94/SC4, in working drafts, has established the 1,800 pounds (8 kN) limit on MAF. On the basis of this information, 1,800 pounds (8 kN) is considered the appropriate MAF for inclusion in this standard where harnesses are to be used in arresting falls.

Thus, the most current ANSI Z359.1 standard (section 3.1.2) continues to prescribe the 1,800 pound (8 kN) limit for the same reasons explained above.

Proposed paragraph (d)(1)(ii) limits the maximum deceleration distance to 3.5 feet (1.07 m). The deceleration distance of 3.5 feet (1.07 m) would be in addition to the free fall distance which OSHA proposes to limit to 6 feet (1.8 m), meaning that a total fall of 9.5 feet (2.9 m) could result. OSHA has already adopted this approach in the general industry, construction, and shipyard employment standards on fall protection. The proposed requirements are also consistent with the national consensus standards, ANSI/ASSE Z359.1–2007 (section 3.1.4) and ANSI/ASSE A10.32–2004.

Proposed paragraph (d)(1)(iii) requires the personal fall arrest system to have sufficient strength to withstand twice the potential impact energy of an employee free falling a distance of 6 feet (1.8 m), or the free fall distance permitted by the system, whichever is less. Compliance with this requirement means that the system will not fail if subjected to twice the design shock load. For example, if a body harness is being used as part of the personal fall arrest system, proposed paragraph (d)(1)(i) of the standard specifies that the arresting force be limited to 1,800 pounds (8 kN). Therefore, the system would have to be capable of withstanding an impact force of 3,600 pounds (16 kN), which is twice the potential arresting force of the employee using the system. The Agency believes that a safety factor of two is necessary because of normal wear on the system. In practice, arresting forces should never approach the design shock load because the free fall distance will be less than 6 feet (1.8 m), and because lifelines, which absorb energy, will often be used. Again, this requirement is consistent with OSHA's existing general industry, construction, and shipyard employment standards on fall protection.

A note to proposed paragraph (d) makes it clear that personal fall arrest systems that meet the criteria and protocols set out in Appendix D to proposed § 1910.140 will be deemed to be in compliance with the requirements of proposed paragraphs (d)(1)(i) through (iii) when used by an employee with a combined tool and body weight of 310 pounds (140 kg) or less. The non-mandatory appendix provides one method which will allow employers to evaluate the ability of a personal fall arrest system to meet the necessary criteria. The appendix is restricted to situations in which total tool and body weight is 310 pounds (140 kg) or less because the test methods in proposed Appendix D were designed for this weight. If a system is needed for a greater or lesser weight, the test methods may still be used, provided they are modified, possibly by using a heavier or lighter test weight to reflect the heavier or lighter weight of the employee.

In paragraph (d)(2) OSHA is proposing criteria for the use of personal fall arrest systems. In paragraph (d)(2)(i) OSHA proposes that where employees working on suspended scaffolds or on similar work platforms are connected to horizontal lifelines that could become vertical lifelines, the device used to connect to the horizontal lifeline must be capable of locking in both directions on the lifeline. OSHA believes this requirement is necessary because a horizontal lifeline could become a vertical lifeline if one end of the scaffold support lines fails. For example, a rope grab that does not lock in both directions on the lifeline could fail to hold, allowing the employee to fall to a lower level. OSHA has already adopted this approach in the general industry, construction, and shipyard employment standards on fall protection. The hazard addressed in the proposed requirement is also addressed in the national consensus standard, ANSI/ASSE A10.32–2004 (section 4).

Paragraph (d)(2)(ii) of the proposal requires the personal fall arrest system to be rigged so that an employee can neither free fall more than 6 feet (1.8 m) nor contact any lower level. The system strength and deceleration criteria are based on a maximum free fall distance of 6 feet (1.8 m). A longer free fall distance could mean that the strength and deceleration requirements would no longer protect employees. OSHA has already adopted this approach in the

general industry, construction, and shipyard employment standards on fall protection. Similar requirements are also found in the national consensus standards, ANSI/ASSE Z359.1–2007 (section 7.2) and ANSI/ASSE A10.32–2004 (section 4.2.1).

Paragraph (d)(3) of the proposal prohibits the use of body belts for personal fall arrest systems. Because OSHA is proposing to ban the use of body belts as part of personal fall arrest systems, it has not proposed maximum arresting forces when body belts are used. OSHA notes that both the construction industry and shipyard employment standards already prohibit the use of body belts as part of personal fall arrest systems.

Paragraph (e) Positioning Systems

Proposed paragraph (e) establishes specific requirements applicable when positioning systems, including window cleaner's positioning systems, are used. These new, specific requirements are in addition to the general requirements in proposed paragraph (c) which apply to all types of fall protection equipment.

Proposed paragraph (e)(1) establishes performance criteria for positioning systems. Proposed paragraph (e)(1)(i) requires that all positioning systems, except window cleaner's positioning systems, be capable of withstanding, without failure, a drop-test consisting of a 4-foot (1.2-m) drop of a 250-pound (113-kg) weight.

Proposed paragraph (e)(1)(ii)(A) requires window cleaner's positioning systems to be capable of withstanding, without failure, a drop-test consisting of a 6-foot (1.8-m) drop of a 250-pound (113-kg) weight. In addition, these systems must limit the initial arresting forces to not more than 2,000 pounds (8.9 kN), with a duration not to exceed 2 milliseconds, with any subsequent arresting forces imposed on the falling employee limited to not more than 1,000 pounds (4.5kN). These systems must withstand a more rigorous drop test than other positioning device systems because of their potential for greater free fall distances. OSHA has already adopted this approach in paragraph (b)(2) of the shipyard employment standards at § 1915.160, Positioning device systems. A note applicable to proposed paragraphs (e)(1)(i) and (e)(1)(ii) indicates that window cleaners' positioning systems meeting the tests outlined in Appendix D to proposed § 1910.140 are considered to be in compliance with these provisions.

Proposed paragraph (e)(1)(iii) addresses criteria for lineman's body belt and pole strap systems. Although positioning equipment used in electric power transmission and distribution work is not intended to be used as insulation from live parts, positioning straps could come into contact with live parts while an employee is working. Thus, it is still important for this equipment to provide some level of insulation. Proposed paragraphs (e)(1)(iii)(A) and (e)(1)(iii)(B) would require positioning straps to be capable of passing dielectric and leakage current tests. This provision is equivalent to existing § 1926.959(b)(1). The voltages listed in these paragraphs are alternating current. The note following proposed paragraph (e)(1)(iii) indicates that equivalent direct current tests would also be acceptable.

The remaining requirements in proposed paragraph (e)(2) contain criteria applicable only to window cleaner's belts, anchorages, and other components of window cleaner's positioning systems. There are no specific requirements for this type of personal fall protection system in existing OSHA standards. Rather, OSHA enforces the general requirement to have fall protection, and relies on national consensus standards for the criteria for such systems. The proposed requirements will enhance compliance and reduce hazards by clarifying exactly what requirements apply to positioning systems used for window cleaning. All of these requirements are based on the national consensus standard, ANSI/IWCA I–14.1–2001, Window Cleaning Safety, and address the design, strength, and installation of window cleaners' positioning systems. OSHA believes that these proposed criteria, in conjunction with the proposed general criteria for all personal fall protection systems (§ 1910.140(c)), provide a reasonable and necessary level of safety for employees using these systems.

OSHA notes that all of these requirements were proposed in the 1990 rulemaking. There was no substantive comment on the proposed revisions even though OSHA asked for specific comment as to whether existing buildings have window cleaning anchors that meet these standards and, if not, what would be the cost of coming into compliance. OSHA particularly raised concern about one proposed provision—paragraph (e)(2)(iii) of the current proposal—which requires that window cleaning anchors and the structures to which they were attached support a 6,000 pound (26.5 kN) load, noting that there was some concern that the 6,000 pounds (26.5 N) might be too restrictive. OSHA believes that window cleaner's belts and their associated anchors are not used as commonly as they once were. However, since there are buildings where these systems are still used, OSHA proposes these minimal requirements to protect employees.

Also, OSHA proposes to add two appendices to § 1910.140. These appendices, which are non-mandatory, would provide specific information and examples pertaining to the types of equipment regulated in this proposed standard. Appendix C provides useful information and guidance concerning the use of personal fall arrest systems. The information concerns the selection and use of personal fall arrest systems including considerations for testing, employee training, instruction, and inspection. Appendix D provides test methods for personal fall arrest systems and positioning device systems. OSHA specifically requests comments on whether or not this proposed appendix should include any test methods with the final rule; update the test methods proposed; or include other testing sources. OSHA also seeks comment on whether these proposed appendices will prove helpful in complying with the proposed provisions. Additionally, the Agency requests comment whether any of the non-mandatory language in Appendix C or D should be included in the requirements of § 1910.140.

Finally, OSHA is proposing to require employers to conduct a hazard assessment as required by § 1910.132(d), and to follow the training requirements set out in § 1910.132(f).

V. Preliminary Economic and Initial Regulatory Flexibility Screening Analysis

A. Introduction

OSHA has determined that this proposed standard governing occupational exposure to slip, trip, and fall hazards on walking and working surfaces is significant under Executive Order 12866 (Sept. 30, 1993). Accordingly, the Office of Regulatory Analysis within OSHA has prepared this Preliminary Economic and Initial Regulatory Flexibility Screening Analysis (PEA) for the proposed standard. In conducting the PEA, OSHA has, to the extent possible given the available resources, endeavored to meet the requirements of OMB's Circular A–4 (OMB, 2003), a guidance document for regulatory agencies preparing economic analyses under Executive Order 12866.

This PEA addresses issues related to the costs, benefits, technological and economic feasibility and economic impacts (including small business impacts) of the Agency's proposed revisions to subpart D, Walking-

Working Surfaces, and subpart I, Personal Protective Equipment. The analysis also evaluates regulatory alternatives to the final rule. This rule has been reviewed by the Office of Information and Regulatory Affairs in the Office of Management and Budget, as required by executive order.

The purpose of the PEA is to:

- Identify the establishments and industries potentially affected by the proposed rule;
- Estimate current exposures to slip, trip, and fall hazards in general industry and assess the technologically feasible methods of controlling these exposures;
- Estimate the benefits of the rule in terms of the reductions in the number of deaths and injuries that employers will achieve by coming into compliance with the standard;
- Evaluate the costs and economic impacts that establishments in the regulated community will incur to achieve compliance with the proposed standard;
- Assess the economic feasibility of the rule for affected industries; and
- Evaluate the principal regulatory alternatives to the proposed rule that OSHA has considered.

The Regulatory Flexibility Act (as amended in 1996) (SBA, 1996; 5 U.S.C 601) requires that an initial regulatory flexibility analysis (IRFA) be prepared if an agency determines that a proposed rule will impose a significant economic impact on a substantial number of small entities. To determine the need for an IRFA, OSHA voluntarily prepared an initial regulatory flexibility screening analysis that identifies and estimates the impacts of the proposed standard on small businesses. In addition to background information on the affected workforce and the hazards to which they are exposed, this subsection of the economic analysis describes the need for a standard for walking-working surfaces and the criteria that guide OSHA in conducting a feasibility analysis for a safety standard. On the basis of the screening analysis, presented in the last subsection of this PEA, OSHA certifies that the proposed rule will not have a significant economic impact on a substantial number of small entities.

This PEA contains the following subsections in addition to this Introduction:

- Assessing the Need for Regulation.
- Industry Profile.
- Benefits, Net Benefits, and Cost Effectiveness.
- Technological Feasibility.
- Costs of Compliance.
- Economic Impacts.
- Initial Regulatory Flexibility Screening Analysis.

To develop the PEA, OSHA relied considerably on (1) the record created throughout the history of this rulemaking, and (2) an analysis by OSHA's contractor, Eastern Research Group (ERG) (ERG, 2007 Ex. 6).

Reasons Why Action by the Agency Is Being Considered

Earlier in this preamble OSHA discussed the major changes that are being proposed to the existing standards for walking-working surfaces and personal protective equipment (subparts D and I of part 1910). The proposed standards are designed to prevent a significant number of slips, trips, and falls that result in injuries and fatalities in general industry, including falls from ladders, roofs, scaffolds, and stairs. Some examples from OSHA's inspection database (OSHA, 2007) best illustrate the kinds of accidents the standards are designed to prevent and how the revised standards will prevent them.

On October 22, 2000, a head repairman for a specialty metals producer in Pennsylvania was replacing a water cooling panel (approximately 8-ft high by 12-ft long) on a basic oxygen furnace vessel. To access the panel, he placed a ladder on an 8-in. diameter pipe. When the employee attempted either to gain access to the panel or to secure the ladder, he fell 22 feet to the ground. He sustained a blunt force trauma injury to his head, and was killed. OSHA cited and fined the employer for a violation of § 1910.23(c)(1), Protection of open-sided floors, platforms, and runways, and § 1910.25(d)(2)(i), Use of ladders, along with other standards. OSHA believes that the proposed clarifications of the requirements for the safe use of ladders and the duty to have fall protection will help to prevent accidents such as the one described above.

In a window cleaning operation on July 20, 2000, two employees were working from boatswain's chairs suspended from a roof by two transportable roof rollers, and lowering their chairs down the side of the building using controlled descent devices. A third employee was on the roof pushing the rollers back and forth to move his coworkers from window to window. The third employee was moving the roller on one end of the building when one of its wheels slipped off the edge of the parapet wall, causing the rollers, which were tied together, to fall between six and seven stories to the ground. The first two employees, whose lifelines were only attached to the suspension point on the rollers, also fell to the ground and sustained serious injuries. When one of the rollers went over the edge, the third employee was catapulted off the roof and fell approximately 84 feet to the ground. He died from the fall. In the investigation, OSHA determined that neither of the rollers was anchored to the roof, and cited the employer for violating the general duty clause (section 5(a)(1)) of the OSH Act. OSHA believes that compliance with the requirements for rope descent systems in the proposed standard for scaffolds (§ 1910.27(c)) will help to prevent this type of accident.

A 49-year-old service technician fractured five vertebrae and eventually died from the injuries received when he fell 11 feet from a fixed ladder to a concrete landing while performing air conditioning service work on the roof of a shopping mall. OSHA's investigation of the August 24, 2004, accident identified the likely cause of the incident as the absence of uniform spacing between the ladder rungs throughout the climb (the space between the top two rungs/steps was 28 inches whereas the space between lower rungs was much narrower). Proposed § 1910.23(b)(2) requires that, with a few exceptions, rungs, cleats, and steps of ladders be spaced not less than 10 inches (25 cm) apart nor more than 14 inches (36 cm) apart, as measured between the center lines of the rungs, cleats, and steps. OSHA believes that compliance with this proposed provision will prevent accidents such as the one described here.

As a final example, on October 22, 1999, an employee in a South Dakota feed mill was atop a soybean storage bin gauging the level of the contents when he fell approximately 24 feet onto a concrete surface. The employee suffered head and upper body injuries that resulted in his death. The subsequent OSHA investigation resulted in citations for violations of the general duty clause and provisions in existing subpart D on floors, platforms, and railings. OSHA believes that the proposed revisions to subpart D will remove any ambiguity in the scope or intent of the rule, which would help to prevent falls from storage bins and related surfaces.

When establishing the need for an occupational safety and health standard, OSHA must evaluate available data to determine whether workers will suffer a material impairment of their health or functional capacity as a result of being exposed to the safety or health hazard at issue. Prior to promulgating a standard, the Agency must also determine that "a significant risk of harm exists and can be eliminated or lessened by a change in practices." *See Industrial Union Dep't* v. *American Petroleum Institute,* 448 U.S. 607 (1980).

See also 58 FR 16612 (March 20, 1993) (OSHA must conclude that the standard it is promulgating will substantially reduce a significant risk of material harm).

OSHA has determined that the best available data for quantitatively estimating the risks associated with slips, trips, and falls in general industry come from the BLS injury and illness survey and census data. OSHA has relied on federal survey and census data from recent years to determine the risk to similarly exposed employees across industry in other safety standards regulating employee exposure to risks (*e.g.,* Confined Spaces in Construction 72 FR 67351 (November 28, 2007)). It is also an accepted scientific approach used by other regulatory and non-regulatory entities in making decisions regarding public safety.

As previously discussed in section II of this preamble, OSHA has preliminarily determined that hazards associated with walking and working on elevated, slippery, or other surfaces pose significant risks to employees and that the proposed revisions to subparts D and I are reasonable and necessary to protect affected employees from those risks. The Agency estimates that full compliance with the revised walking-working surfaces standards will prevent 20 fatalities and 3,706 lost workday injuries annually. This constitutes a substantial reduction of significant risk of material harm for the exposed population of approximately 5.3 million employees in general industry.

Feasibility

The Agency must show that the standards it promulgates are technologically and economically feasible. *See* 58 FR 16612. A standard is *technologically feasible* if the protective measures required already exist, can be brought into existence with available technology, or can be created with technology that can reasonably be designed and developed.[10] Protective measures required by safety standards generally involve the use of engineering and work practice controls. Engineering controls include, for example, guardrails, toeboards, or other barriers that protect employees from exposures to slip, trip, and fall hazards. Work practice controls are techniques that employees use to perform their jobs (for example, safe climbing techniques on ladders). Administrative controls (such as job rotation) and personal protective equipment (PPE) (such as harnesses and lanyards) may also be used to comply with safety standards.

A standard is *economically feasible* if the cost of meeting the standard does not threaten the existence or competitive structure of an industry. An OSHA standard may be economically feasible even if it imposes costs that will put some marginal firms out of business.[11] As discussed in more detail below, OSHA has preliminarily concluded that the proposed revisions to subparts D and I are both economically and technologically feasible.

Methodology

OSHA has developed an economic analysis to estimate the benefits and costs of the proposed revisions to subparts D and I. Since 2002, under the direction of the Office and Management and Budget, the Agency has "monetized" the value of the injuries, illnesses, and fatalities expected to be prevented through the promulgation of new standards, *i.e.,* it has monetized the value of expected benefits. This provides a common metric for comparing expected benefits and costs.

For all of its occupational safety and health standards, OSHA estimates benefits and costs as annual figures. The Agency believes that this is the simplest and best way to assess the impact of its standards. Computing annual estimates focuses the Agency's analysis on information from current conditions and recent years, which the Agency deems the best, *i.e.,* most accurate and reliable, information. OSHA typically uses a time period of ten years for its analysis, unless there are significant long-term effects not captured within a ten-year timeframe. In the case of this proposed rule for subparts D and I, adding additional years to the timeframe of the analysis would not change any major policy conclusions.

To isolate and describe only the effects of a new standard, the Agency carefully distinguishes, for both benefits and costs, the change induced by the new standard without regard to the ongoing level of compliance with existing standards. Injuries or fatalities preventable through compliance with existing regulations are not included in OSHA's assessment of the benefits expected from compliance with the new standard. Similarly, the Agency does not include the cost of complying with existing standards in its assessment of what it will cost employers to comply with the new standard. To make a standard's costs and benefits consistent for comparison, the Agency assumes that all employers will fully comply with the proposed standard. OSHA's analysis also assumes that all costs are incurred in the first year following promulgation of the final standard (ongoing costs are incurred annually beginning in Year 1) and that benefits result immediately.

The Agency employs a "willingness-to-pay" (WTP) approach in estimating benefits. This is a two-step process in which, for the proposed revisions to subparts D and I, 16 years of accident data collected by the Bureau of Labor Statistics were studied to estimate the number of fatalities and injuries associated with slips, trips, and falls, and also the number of such accidents that would be avoided by full compliance with the proposed standard. Secondly, the Agency uses values from the WTP approach to produce a monetary value of benefits. The WTP approach applied by many economic studies estimates the "value of a statistical life" (VSL) based on data collected about job risks and the "risk premium" in wages that is paid to employees in riskier jobs. The VSL is used as a metric by many government regulatory authorities, such as the National Highway Traffic Safety Administration and the Environmental Protection Agency, but is particularly appropriate for occupational regulations since it is derived from occupational risks and wages.

The Agency's calculation of benefits and costs, summarized in the table on net benefits (Table V–14 in this PEA), is implicitly one that looks at society as a whole. Estimated costs are borne by all affected employers, while benefits from the WTP approach are market-derived estimates of employees' valuations of job risk and reward (economic feasibility, discussed in Subsection G below, focuses on employer and industry economic impacts without regard to benefits). The VSL represents to some extent the value to an employee of taking on additional job risks and describes the value to employees of avoiding injury and death.

The primary alternative to a WTP approach is a "cost-of-injury" (COI) approach. A COI approach accounts for the various costs to all parties associated with an injury or fatality, including medical costs, the costs of work disruption from accidents and accident investigations, indirect costs to employers (*e.g.,* absenteeism, hiring costs), lost wages or job opportunities,

[10] See *Society of the Plastics Industry* v. *OSHA,* 509 F.2d, 1301, 1309 (1975); *USWA* v. *Marshall,* 647 F.2d, 1189 (1980); *American Textile Manufacturers* v. *Donovan,* 452 U.S. 490 (1981); and *Building and Construction Trades Dept., AFL–CIO* v. *Brock,* 838 F.2d 1258 (1988).

[11] See *Industrial Union Dept.* v. *Hodgson,* 499 F.2d 467 (1974); *USWA* v. *Marshall,* 647 F.2d, 1189 (1980); and *American Textile Manufacturers* v. *Donovan,* 452 U.S. 490 (1981).

and rehabilitation expenses. The COI approach results in ascribing costs and benefits to many involved entities: The employer, the employee, workers' compensation programs, medical insurance, Federal disability programs, governmental bodies, and taxpayers, for example. A COI approach does not capture a value for loss of life, pain and suffering, impacts on families, or similar parameters, and for that reason the Agency believes that the VSL is more consistent with the purposes of the OSH Act.

B. Assessing the Need for Regulation

Introduction

Employees throughout general industry are exposed to slip, trip, and fall hazards that can and do cause serious injury and death. As detailed below, OSHA estimates that, on average, approximately 216,000 serious (lost-workday) injuries and 279 fatalities occur annually among these workers; of these totals, 63,000 lost-workday injuries and 230 fatalities would be directly affected by the proposed standard. Although some of these incidents may have been prevented with better compliance with existing safety standards, research and analyses conducted by OSHA have found that many preventable injuries and fatalities would continue to occur even if employers were fully complying with the existing standards. Relative to full compliance with the existing standards, OSHA estimates that an additional 3,706 lost-workday injuries and 20 fatalities would be prevented each year through full compliance with the proposed standards.

An additional benefit of this rulemaking is that it will provide updated, clear, and consistent safety standards for walking and working surfaces and personal fall protection equipment. Most of the existing OSHA standards for walking-working surfaces are over 30 years old and inconsistent with both national consensus standards and more recently promulgated OSHA standards addressing fall protection.

Presently, OSHA's standards for fall protection on walking-working surfaces in general industry differ from the comparable standards for construction work. In most instances, employees use similar work practices to perform similar tasks, irrespective of whether they are technically doing construction or general industry work. Whether OSHA's construction or general industry standards apply to a particular job depends upon whether the employer is altering the system (construction work) or maintaining the system (general industry work). For example, replacing an elevated ventilation system at an industrial site would be construction work if it involves upgrading the system, but general industry work if it involves replacing the system with the same model. Since the work practices used by the employees would most likely be identical in both situations, it is desirable for OSHA's general industry and construction standards to be as consistent as possible. Under OSHA's existing requirements, however, different requirements might apply to similar work practices, *e.g.,* an employer overhauling two or more ventilation systems may have to comply with two different sets of OSHA requirements if one project is considered construction and another general industry. The existing inconsistencies between the construction and general industry standards create difficulties for employers attempting to develop appropriate work practices for their employees. For this reason, employers and employees have told OSHA that they would like the two standards to match more closely. This proposal attempts to achieve that result.

Other benefits of the proposal that OSHA has neither quantified nor monetized include the following. First, OSHA has not attempted to estimate the number of fall injuries prevented that do not result in lost workdays. Second, OSHA has not attempted to estimate the improvements in efficiency of compliance associated with clarifying the existing rule and bringing it into closer correspondence with current voluntary standards.

OSHA's benefits estimates are most sensitive when it comes to estimating the percentage of current injuries and fatalities that can be avoided by full compliance with the proposed standard. The true benefits of the proposal depend on how well the cases reviewed represent actual fall-related fatalities in general industry.

The Agency believes that its estimate of annual fatalities involving slips, trips, and falls (about 230) in general industry is much less sensitive than the estimate of the percentage of fatalities avoided, because the estimate of the annual number of baseline fatalities is derived from 2 years of recent accident data with averages corroborated by 11 prior years of data. Furthermore, because OSHA believes that its benefits estimates are conservatively low, training and work practices specified in this proposal would likely improve the use and application of safety equipment, thereby further reducing fatalities and injuries.

In addition to estimating annualized costs using a discount rate of seven percent, OSHA, for sensitivity purposes, applied an alternative discount rate of three percent to up-front costs. Under the alternative scenario of a three-percent discount rate, OSHA estimates that annualized costs would decline from $173.2 million to $168.8 million. For both this scenario and for the primary (seven-percent rate) scenario, OSHA assumed that all costs (first-year and recurring) will be incurred upon implementation of the final standard (*i.e.,* there are no phase-in provisions). OSHA is also assuming that the benefits outlined in this section will accrue once the rule takes effect. Other cost-related uncertainties are described in greater detail below in section D of this PEA, and concern OSHA's estimates of the number of buildings affected by, and the number of employees who would require training under, this proposed standard.

Before reaching the preliminary conclusion that this proposal is necessary to reduce the number of fatalities and injuries occurring among workers involved in activities that expose them to slips, trips, and falls, and to make the applicable standards more clear and consistent, OSHA considered many regulatory and non-regulatory alternatives. These alternatives are discussed in the remainder of this subsection.

Alternative Regulatory Approaches

To determine the appropriate approach for addressing the occupational risks associated with slips, trips, and falls in general industry, OSHA considered many different factors and potential alternatives. The Agency examined the incidence of injuries and fatalities and their direct and underlying causes to ascertain where existing standards needed to be strengthened. OSHA reviewed these standards, assessed current practices in the industry, collected information and comments from experts, and scrutinized the available data and research.

OSHA faces several constraints in determining appropriate regulatory requirements. Under section 3(8) of the OSH Act, OSHA standards must be "reasonably necessary or appropriate to provide safe or healthful employment and places of employment." Also, under section 6(b)(8) of the OSH Act, to the extent an OSHA standard differs substantially from existing national consensus standards, the Agency must explain why the OSHA standard will better effectuate the purposes of the OSH Act. As noted elsewhere, OSHA standards must also be technologically

and economically feasible and cost effective.

The table below presents a summary of projected costs and benefits for each section of the proposed standard.

Proposed requirement	Benefits			Costs ($millions)
	Type of accident prevented	Fatalities prevented	Injuries prevented	
§ 1910.22 General Requirements.	Fall from floor, dock, or ground level.	1.0	388	$15.7
	Fall from building girders or other structural steel.	0.2	13	
§ 1910.23 Ladders	Fall from ladder	large fraction of 5.5	large fraction of 1,871	9.7
	Fall from ship, boat, n.e.c.	fraction of 1.4	fraction of 2	
§ 1910.24 Step Bolts and Manhole Steps.	Fall from ladder	small fraction of 5.5	small fraction of 1,871	3.7
	Fall down stairs or steps	0.4	846	
§ 1910.27 Scaffolds	Fall from scaffold, staging	large fraction of 6.7	large fraction of 174	73.0
§ 1910.28 Duty to Have Fall Protection.	Fall from ladder	small fraction of 5.5	small fraction of 1,871	0.09
§ 1910.29 Fall Protection Systems Criteria and Practices.	Fall from building girders or other structural steel.	0.2	13	8.4
	Fall from ship, boat, n.e.c.	fraction of 1.4	fraction of 2.	
	Fall from scaffold, staging	small fraction of 6.7	small fraction of 174.	
§ 1910.30 Training Requirements.	Multiple fall categories	fraction of benefits for many fall categories.	fraction of benefits for many fall categories.	44.1
§ 1910.140 Fall Protection	Multiple fall categories	fraction of benefits for many fall categories.	fraction of benefits for many fall categories.	18.5

Source: U.S. Dept. of Labor, OSHA, Directorate of Evaluation and Analysis, Office of Regulatory Analysis, 2010.

A full discussion of the basis for the particular regulatory requirements chosen is provided in section IV, Summary and Explanation of the Proposed Rule, earlier in this preamble. The regulatory alternatives considered by OSHA are discussed in the Initial Regulatory Flexibility Screening Analysis later in this section of the preamble. In that section, Table V–34 presents impacts associated with regulatory alternatives for selected provisions in the proposed standard. OMB's Circular A–4, *Regulatory Analysis,* recommends that agencies "should analyze at least three options: the preferred option; a more stringent option that achieves additional benefits (and presumably costs more) beyond those realized by the preferred option; and a less stringent option that costs less (and presumably generates fewer benefits) than the preferred option" (p. 16). The preferred option is presented in this NPRM. A less stringent alternative, rejected by OSHA, would require training for a more limited number of fall-hazard categories; the cost of this alternative would remain significant (but below the cost of $44.1 million for the preferred alternative training proposal), with a reduction in benefits relative to the preferred alternative.

A more stringent alternative would require that cages, wells, and landing platforms be provided for all fixed ladders, while disallowing ladder safety devices; the cost of this alternative would be highly significant, while the incremental benefits would be modest relative to the preferred alternative. OSHA notes that in the 1990 NPRM, this alternative was one of several provisions associated with the existing standard for which OSHA provided an estimated cost; the annualized cost for cages, wells, and other safety devices for fixed ladders was $1.6 billion in 1990 dollars. Though OSHA believes use of ladder-safety devices has increased considerably since 1990, this more stringent alternative would still probably be extremely expensive compared to the proposed rule.

Alternative Nonregulatory Approaches

Introduction.

The stated purpose of the OSH Act is to "assure so far as possible every working man and woman in the Nation safe and healthful working conditions and to preserve our human resources." (5 U.S.C. 651.) This congressional mandate provides the basis for OSHA's proposed rulemaking on walking-working surfaces, which is designed to mitigate the occupational hazards associated with slips, trips, and falls.

Before issuing a standard, OSHA must assess whether there are other, nonregulatory approaches available that may provide equal or greater benefits. Executive Order 12866 directs regulatory agencies to assess whether an unregulated private market can achieve the same level of social benefits as that expected to result from federal regulation:

Section 1. Statement of Regulatory Philosophy and Principles. (a) The Regulatory Philosophy. Federal Agencies should promulgate only such regulations as are required by law, are necessary to interpret the law, or made necessary by compelling public need, such as material failures of private markets to protect or improve the health and safety of the public, the environment, or the well-being of the American people. In deciding whether and how to regulate, agencies should assess all costs and benefits of available regulatory alternatives, including the alternative of not regulating.

The discussion below considers several nonregulatory alternatives to OSHA's proposed rulemaking: Private market incentives, information dissemination programs, tort liability options, and workers' compensation programs.

Private Market Incentives.

Economic theory suggests that the need for government regulations would be greatly reduced if private markets worked efficiently and effectively to provide health and safety protections for employees. At issue is whether the private market will be able to produce a level of safety and health for employees that will be equal to or greater than that potentially afforded by the proposed OSHA standards. In particular, OSHA examined whether the level of risk of experiencing an injury in an unregulated market would be at least as low as the level of risk expected after completion of this proposed rulemaking for walking-working surfaces.

Theoretically, unregulated markets are capable of achieving an efficient allocation of resources if certain assumptions are satisfied. Necessary assumptions include perfect and free information, perfect and costless mobility of labor and other factors of production, and an absence of any externalities.

A major conclusion of the "perfect competition model" of economic theory is that, in the presence of full information about market choices and outcomes, and with complete mobility of the factors of production, the private market would produce an efficient allocation of resources. In the presence of perfect and complete information regarding occupational risks, labor markets would reflect the presence of different degrees of risk across different industries, firms, and occupations. In such a market, wage premiums would be paid to compensate employees engaged in hazardous occupations for the added risk they confront on the job.

In this theoretical framework, wages would vary directly with the riskiness of a job (other things being equal), and employers would have an incentive to make investments to reduce occupational health and safety risks to the extent employees would demand compensation for being exposed to such risks. In other words, because employers would have to pay their workers a premium to induce them to work in a risky environment, employers would be willing to pay to make that environment less risky by introducing technologies and practices that lower risks to employees.

In addition, a perfectly competitive market will theoretically lead to the efficient allocation of resources only if all of the costs and benefits (pecuniary and nonpecuniary) associated with the behavior of market participants and with market transactions are fully borne by those directly involved. In economic terms, this implies that there will not be any negative externalities associated with economic activities.

If all of the costs associated with occupational safety and health risks would in fact be internalized, then market decisions about occupational safety and health conditions made by employers and employees would be based on a consideration of the full social costs of their economic actions. However, if some of the effects of these actions are externalized (that is, some costs are not borne by employers and employees but by other parties who are external to the transaction), then those costs will not be adequately incorporated into the decisions of managers and workers. The resultant market allocation of resources can then be expected to be less efficient.

Costs and other impacts that are imposed on society and are not borne directly by the economic participants involved in an activity or transaction are referred to as externalities. The existence of such externalities is one reason why an unregulated private market often fails to produce an efficient allocation of resources. The presence of these externalities also implies that economic efficiency can potentially be improved with regulatory interventions.

In a theoretically perfect market without externalities, firms would decide how much to spend on reducing safety and health risks based on the full costs associated with the presence of such risks. The costs include pain and suffering, impacts on the quality of the lives of families, and effects on society as a whole. Employees would decide whether they were willing to work in a particular job based on the relative riskiness of the job and the extent to which they believe the wages offered to them provide adequate compensation for these risks.

Research conducted by OSHA and information from several other sources show that many firms have responded to the risks posed to employees by exposures to slip, trip, and fall hazards. Employers have increasingly recognized the costs associated with these risks and have implemented measures to reduce the occupational risks faced by their employees. In fact, many risk control programs already implemented by employers go beyond the requirements of the existing and proposed OSHA standards. The fact that employers are implementing these programs demonstrates that economic incentives exist, at least to some degree, to motivate employers in the direction of reducing the risks associated with occupational exposures to slip, trip, and fall hazards in general industry.

However, OSHA notes that many employers continue to fall short of providing even minimum safety protections for their employees. Such circumstances persist despite ongoing attempts by OSHA and other groups to provide information and assistance to employers to increase awareness and reduce the risks of working on surfaces where there are exposures to slip, trip, and fall hazards. The benefits subsection of this preliminary analysis shows that preventable injuries and fatalities continue to occur every year. The evidence indicates that market forces cannot alone curb occupational slip, trip, and fall risks adequately.

Among employees exposed to the hazards addressed by this proposed rule, there does not appear to be any risk premium reflected in wage rates that would differentiate between employers based on the extent of risks faced by employees. In fact, there is some evidence that in the affected industries, wages for employees in similar jobs performing similar types of work are negatively correlated with the degree of risk involved. For example, employees of host sites tend to earn more than their counterparts working for contractors, and yet the fatality and injury rate can often be higher among employees of contractors.[12]

There are a variety of reasons why employees may not be paid the risk premiums that would theoretically be necessary to ensure that markets provide efficient levels of expenditures on safety and health. Employees have imperfect knowledge about the nature and magnitude of occupational risk factors. Many employees are not likely to be fully aware of the extent and nature of occupational risks associated with different jobs and different employers at different points in time.

Even if employees have adequate information regarding the risks of occupational injuries, they may be unable to adequately incorporate this information into their decisions about choosing a job or staying on the job. Other factors and circumstances may affect employment choices, including significant costs associated with job searches and changing jobs.

Assessing occupational risks for the purpose of determining the acceptability of wages offered is made even more difficult when differences in risk between two firms are significant but cannot be readily observed or predicted over the pertinent time periods. If differences in occupational risk between various establishments are not fully incorporated into the employment decisions of employees, the wage premiums paid for risky jobs will not accurately reflect the relative occupational risks associated with specific jobs in different firms. Thus, firms will have little incentive to individually reduce risk beyond levels present in other firms.

[12] As evidence of this phenomenon, 254,550 general maintenance and repair workers employed by manufacturers in 2007 earned a mean hourly wage of $19.04 and suffered 4,610 lost-workday injuries and illnesses, or 181 injuries or illnesses per 10,000 workers, while 45,040 general maintenance and repair workers employed in Other Services in 2007 earned a mean hourly wage of $14.90 and experienced 1,150 lost-workday injuries and illnesses, or 255 injuries or illnesses per 10,000 workers. See Bureau of Labor Statistics (BLS), *Occupational Employment Statistics,* and BLS, *Occupational Injuries and Illnesses.*

In addition, many employers may simply be unaware of the direct and indirect costs associated with occupational risks. Some employers may regard these costs as beyond their control or as part of general overhead costs. Employers may also not be fully aware of the availability of cost-effective ways of ameliorating or eliminating these risks and reducing the corresponding costs.

A significant problem that prevents risk premiums in an unregulated market from achieving the theoretical results that may potentially reduce occupational risks involves imperfections in the operation of labor markets. Changing jobs can be costly, and in some circumstances the costs may preclude a decision to change jobs solely on the basis of the occupational health risks involved. Factors that may make job changes particularly costly include nontransferability of occupational skills or seniority within a company, the difficulty of acquiring sufficient skills and abilities (*i.e.,* human capital) to seek alternative employment opportunities, the costs and uncertainty associated with relocating to take advantage of better employment opportunities, the existence of institutional factors such as the nontransferability of pension plans and seniority rights, and the risk of prolonged periods of unemployment.

Often, differences in occupational risk between two firms must be marked before an employee will change jobs on that basis. Therefore, wage rates determined by a market in which the protection of occupational safety and health is unregulated are unlikely to fully compensate employees for occupational health and safety risks, including those related to the risks of concern here.

Information Dissemination Programs

OSHA and other organizations currently produce and disseminate a considerable amount of information regarding the risks associated with work on walking and working surfaces and the methods that can be used to minimize slip, trip, and fall hazards. The dissemination of such information would continue in conjunction with the promulgation of the proposed standards. Alternatively, in lieu of issuing mandatory standards, OSHA could rely on current or expanded information dissemination programs to generate the incentives necessary to produce further reductions in injuries and fatalities. Better informed employees can more accurately assess the occupational risks associated with different jobs, thereby facilitating those market interactions that result in wage premiums for relatively risky occupations.

There are several reasons, however, why reliance on information dissemination programs will not yield the level of social benefits achievable through compliance with the proposed rules for walking-working surfaces. Foremost, there are no reliable incentives or mechanisms that would ensure that appropriate and sufficiently detailed information could be produced, or that such information would actually be distributed among, and relied upon by, employees. Furthermore, the hazards addressed by this proposal are highly specific to individual tasks and work environments. The development of accurate knowledge about these occupational risks would require each employer to make available specific information about the risks present in projects expected to be undertaken in the future. The lack of adequate incentives or mechanisms and the potentially large costs associated with the collection and reporting of the necessary information makes effective information dissemination difficult to implement in practice.

In addition, even if employees are better informed about workplace risks and hazards, other factors, such as barriers to labor mobility, that contribute to market failure would still remain. Finally, as argued above, employees may not be able to evaluate information about long-term risks accurately when making employment decisions. Better information, therefore, will not ensure that the market will produce wage risk premiums in a manner that is consistent with an efficient allocation of resources.

Currently, in addition to the applicable OSHA standards, there are consensus standards, voluntary guidelines, and other information sources for preventing injuries and fatalities from slips, trips, and falls on walking and working surfaces. Although many employers have adopted the practices and procedures recommended by these sources, many other employers have been less successful in the widespread implementation of the recommendations in these voluntary guidelines. The Costs of Compliance subsection of this PEA provides further information regarding current compliance with specific elements in sectors covered by the proposal.

Thus, OSHA's experience and observations regarding slip, trip, and fall hazards on walking-working surfaces show that, while improved access to information about occupational risks can provide for more rational decision-making in the private market, voluntary information programs will not produce an adequately low level of occupational risk.

Tort Liability Options

Employees are generally restricted from using tort law to force employers to pay for costs and damages associated with fatalities and injuries that occur on the job. Greater employee use of tort law in seeking redress from injuries associated with the occupational hazards addressed by this proposal is another possible nonregulatory alternative to the proposed rule. If employees were able to effectively sue their employers for damages caused by work-related hazards, and if other conditions regarding the cost and availability of information, knowledge and mobility of employees, and externalities are satisfied, then the need for an OSHA standard would potentially be reduced or eliminated.

A tort may be described, in part, as a civil wrong (other than breach of contract) for which the courts provide a remedy in the form of an action for damages. The application of the tort system to occupationally related injuries and illnesses would mean that an employee whose disability resulted from exposure to a workplace risk would sue the employer to recover damages. The tort system could thus shift the liability for the direct costs of occupational injury from the employee to the employer, at least under certain specific circumstances.

With limited exceptions, however, the tort system has not been a viable alternative to regulation in dealings between employees and employers, for a number of reasons. All States have legislation making workers' compensation either the exclusive or principal legal remedy available to employees. Generally, tort law can be applied only to third-party producers or suppliers of hazardous products or equipment, for example, asbestos products. It is often difficult, however, to demonstrate that workplace injuries have been caused by defective or negligently designed products or equipment.

Moreover, legal proceedings generally fail to fully internalize costs because of the substantial legal fees and uncertainties associated with bringing court actions. In deciding whether to sue, the victim must be sure that the potential award will exceed both the expense and hardship of bringing the lawsuit. Legal expenses commonly include a contingency fee for the plaintiff's lawyer, plus court fees and the costs of accumulating evidence and

witnesses. The accused firm must also pay for its defense.

In sum, the use of legal action as an alternative to regulation is limited because of the expense, delays, and uncertainties involved, and because under current state laws, workers' compensation will normally be an exclusive remedy that will prevent an employee from filing a suit. The tort system, therefore, does not serve adequately to protect employees from exposure to risks in the workplace.

Workers' Compensation Programs

The existing workers' compensation programs serve to partially address the market failures that result in insufficient reductions in occupational risks. An alternative to a mandatory standard would be a continued reliance on these and other existing programs (including possible modifications or enhancements to these programs) to address occupational risk. The workers' compensation system was implemented in part as a result of the perceived failure of the unregulated market to compel employers to sufficiently reduce occupational health and safety risks and to compensate employees for bearing those risks. The system seeks to shift some of the burden of the costs associated with occupational injuries and illnesses from workers to employers. By so doing, workers' compensation requirements can ensure that more of the costs of occupational injuries and illnesses are incorporated into decisions of employers even if employees do not have full information regarding their risks or are unable to receive full wage compensation for such risks. Originally designed to force more of the social costs of occupational injuries and illnesses to be internalized, the workers' compensation program has in practice fallen short of fully achieving this goal and does not fully compensate employees for occupationally related injuries and illnesses.

Compensation tends to be especially inadequate in permanent disability cases, in part because of time limits on benefit entitlements and in part because of the failure of the system to adjust benefits for changes in an employee's expected earnings over time. Several states restrict permanent, partial, and total disability benefits either by specifying a maximum number of weeks for which benefits can be paid or by imposing a ceiling on dollar benefits. Both temporary and permanent disability payments are commonly limited by imposing a ceiling on the income per week that can be paid. In addition, under workers' compensation, no award is made for pain and suffering.

Although rules vary by state, temporary disability income is designed in most states to replace two-thirds of the worker's before-tax income. However, most states place a maximum and a minimum on the amount of money paid out to the employee, regardless of his or her actual former income.

The Workers Compensation Research Institute (WCRI) has studied the extent to which workers' compensation replaces after-tax income in 19 states. These studies show that temporary total disability payments replace between 80 and 100 percent of the after-tax income of the majority of employees in all of the states examined (WCRI, 1993). From 3 to 44 percent of employees receive less than 80 percent of their after-tax income, and from 0 to 16 percent receive more than 100 percent of their previous after-tax income (as a result of the "floor" on payments). In 15 of the 19 states examined, more employees receive less than 80 percent of their former after-tax income than receive more than 100 percent of their former income. WCRI does not provide estimates of the average replacement rates for all employees in a State. However, based on these data, it seems reasonable to assume that, on average, workers receive no more than 90 percent of their after-tax income while on temporary disability.

In addition to not fully replacing after tax income, workers' compensation payments, which are not taxable, provide no replacement for tax losses to the Federal, State or local government as a result of an illness. This loss is properly considered part of the social losses associated with an illness or injury. Typically taxes, including State and Federal income taxes and employee and employer contribution to social security taxes, will be approximately 30 percent of income. The taxes not paid when an individual is unable to work thus add an additional 30 percent of worker income as losses associated with injuries and illnesses not covered by workers' compensation.

In summary, workers' compensation often covers less than 65 percent of the financial losses associated with the costs of injuries, and does not cover any portion of losses due to pain and suffering. Thus, even if the financial costs were fully internalized by employers, workers' compensation would be insufficient to assure adequate economic incentives to address work-related injuries and illnesses. For workers' compensation to be able to internalize costs of work-related injuries and illnesses, it would be necessary for the costs an employer pays for workers' compensation to be directly related to the employer's risk of causing work-related injuries or illnesses.

Most workers' compensation programs nominally include the employer's injury experience as a factor in determining the level of the employer's insurance premiums. However, the majority of firms are not rated individually for their safety and health record; that is, they are not "experience rated." For example, small firms often are ineligible for experience rating because of the high year-to-year variance in their claim rates. Such firms are class rated, and rate reductions are granted only if the experience of the entire class improves. Segregation of loss experience into classes is somewhat arbitrary, and an individual firm may be classified with other firms that have substantially different accident rates. Even when firms have an experience rating, the premiums paid may not accurately reflect their true degree of risk. In addition, a firm's experience rating is generally based on the benefits paid to ill or injured workers, not on the firm's safety and health record or on the actual risks faced by employees. Thus, in some cases employers may have more of an incentive to reduce premiums by contesting claims than by initiating safety and health measures.

For employers who rely on workers' compensation insurance, the payment of premiums represents the employer's major cost for the occurrence of occupational injuries and illnesses. However, the mechanism for determining an employer's workers' compensation premium frequently fails to reflect the real costs associated with a particular employer's record. As a result, efforts made by an employer to reduce the incidence of occupational injuries and illnesses are not necessarily reflected in reduced workers' compensation premiums. Similarly, firms that devote fewer resources to promoting employee safety and health often may not incur commensurately higher workers' compensation costs. Consequently, the program does not provide direct incentives for most employers to reduce the occupational health and safety risks in their workplaces.

Finally, workers' compensation is an insurance mechanism through which participants spread and share the risk of injury and illness claims, and the costs associated with occupational injuries and illnesses are often spread throughout the economy through risk sharing stemming from participation in health insurance programs. For

example, some direct costs may not be incurred or attributed to employers because many employees go to their private physician rather than the company's physician for work-related injuries and illnesses, even though there are systemic mechanisms in place to ensure that work-related injuries are treated through the workers' compensation system. The social burden of adverse health effects is also shared by taxpayer-supported programs such as welfare, Social Security disability and death benefits, and Medicare. Employers have, therefore, less incentive to avoid such losses than they would if they were directly liable for all such claims. This transfer of risk is another reason why the market does not fully internalize the social costs of occupationally related injuries and illnesses.

The workers' compensation system provides economic incentives for larger firms, especially those that self-insure for workers' compensation, because these firms internalize a greater portion of the true costs of the work-related injuries and illnesses incurred by their employees. Thus, larger firms can generally be expected to do more to reduce the costs associated with occupational risks than smaller firms.

In summary, the workers' compensation system suffers from several defects that seriously reduce its effectiveness in providing incentives for firms to create safe and healthful workplaces. First, because the scheduled benefits are often significantly less than the actual losses experienced by injured or ill workers and the social losses experienced by tax payers, the existence of workers' compensation programs limits an employer's liability to levels significantly below the actual costs of the injury or illness. Second, premiums for individual firms are often unrelated or only loosely related to that firm's risk environment. The firm, therefore, does not receive the proper economic incentives and consequently fails to invest sufficient resources in reducing workplace injuries and illnesses. The economic costs not borne by the employer are imposed on the employee directly or on society through social welfare programs.

Summary

OSHA has determined that certain employees are exposed to occupational risks associated with slip, trip, and fall hazards on walking and working surfaces. The private market has not been effective in sufficiently reducing this level of risk due to a lack of complete information about safety risks in specific work environments, limits on worker mobility, and other factors that contribute to the failure of markets to provide an efficient allocation of resources. Options for improving the operations of markets include information dissemination programs, tort liability options, and workers' compensation programs. After considering each of these options, OSHA has concluded that none of them will provide the level of benefits achievable by this proposal to amend subparts D and I.

C. Profile of Affected Industries, Firms, and Workers

Introduction

This subsection presents OSHA's preliminary profile of the firms, establishments, and employees within the industries affected by OSHA's proposed revision to subparts D and I and is based upon data that were assembled and organized by OSHA's contractor, Eastern Research Group (ERG, 2007, Ex. 6).

Affected Industries and Employees

Revised subparts D and I apply to employers and industries covered by OSHA's standards for general industry in 29 CFR part 1910. Similarly, all other subparts in part 1910 affected by these proposed revisions to OSHA's walking-working surfaces standards would impose requirements on employers in general industry under OSHA's jurisdiction. Excluded are establishments in the agriculture, construction, maritime (longshoring, marine terminal, and shipyards), and mining industries. Also excluded are employee tasks on surfaces that, due to location or operational status, fall outside of OSHA's jurisdiction. An example of the latter category is employee exposure to fall hazards when railroad rolling stock is traveling on rails, or trucks are traveling on highways; those operations are regulated by the Department of Transportation.

The walking and working surfaces covered by the standards are present in nearly every establishment. Therefore, OSHA assumes that the number of establishments and employees potentially affected by subpart D includes all establishments and employees in general industry. Table V–1 shows the total number of these establishments and employees potentially affected by revisions to subpart D. The data are listed in order by North American Industry Classification System (NAICS) industry code.

Table V–1 provides economic profile statistics for the industries covered by the proposed standards. Industries are classified and listed by 4-digit North American Industry Classification System (NAICS) industry code (OMB, 2002). Basing its economic profile on the U.S. Census' Statistics of U.S. Businesses for 2006 ("Census data"), OSHA estimates that 6.7 million establishments employing 112 million employees would be affected by the proposed standards.

These revisions to the fall protection standards are estimated to primarily affect approximately 5.3 million employees engaged in installation, maintenance and repair operations in general industry. While it is possible that some other employees may be affected by the revisions to the standards, this represents the main group affected by the standards, and not all of these will automatically be affected. To identify such employees, OSHA identified general industry employees in occupational codes involving construction, installation, maintenance, and repair-related occupational codes. This approach assumes that employees in construction occupations who are employed by general industry employers rather than construction employers are routinely engaged in what OSHA labels maintenance, rather than construction, activities. The methodology for deriving these estimates is discussed in the ERG report (ERG, 2007, Ex. 6).

OSHA also used Census [13] data on payroll and receipts to estimate average revenue per establishment in 2006 for each 4-digit NAICS industry. The methodology for deriving these estimates is discussed later in this PEA.

BILLING CODE 4510–29–P

[13] In this PEA, "Census" refers to the U.S. Census Bureau.

Table V-1
Profile of General Industry Establishments Covered by Subparts D and I

NAICS	NAICS Description	Establish-ments	Average Receipts per Establishment [a]	Total Employment	Production Employment [b]	Employment in Construction, Installation, Maintenance, and Repair Occupations	
						Number	Share of Prod. Employment
1131	Timber Tract Operations	454	$2,036,662	2,806	N/A	N/A	N/A
1132	Forest Nurseries and Gathering of Forest Products	231	$1,282,856	2,098	N/A	N/A	N/A
1133	Logging	10,038	$993,249	61,400	54,442	2,651	4.9%
1141	Fishing	2,024	$945,244	5,646	N/A	N/A	N/A
1142	Hunting and Trapping	348	$610,900	1,875	N/A	N/A	N/A
1153	Support Activities for Forestry	1,682	$874,316	13,491	N/A	N/A	N/A
2111	Oil and Gas Extraction	7,803	$30,788,486	92,683	35,718	18,902	52.9%
2211	Electric Power Generation, Transmission and Distribution	9,494	$38,674,660	493,670	241,665	165,061	68.3%
2212	Natural Gas Distribution	2,458	$30,459,101	78,813	34,835	23,701	68.0%
2213	Water, Sewage and Other Systems	5,222	$1,753,158	41,944	24,691	9,222	37.4%
3111	Animal Food Manufacturing	1,797	$19,646,498	48,173	34,940	3,443	9.9%
3112	Grain and Oilseed Milling	789	$67,092,728	53,724	38,066	4,683	12.3%
3113	Sugar and Confectionery Product Manufacturing	1,733	$15,335,745	72,604	54,862	6,215	11.3%
3114	Fruit and Vegetable Preserving and Specialty Food Manufacturing	1,706	$36,162,586	164,330	137,803	14,901	10.8%
3115	Dairy Product Manufacturing	1,602	$46,854,264	130,253	100,897	9,409	9.3%

Table V-1, contd.
Profile of General Industry Establishments Covered by Subparts D and I

NAICS	NAICS Description	Establish-ments	Average Receipts per Establishment [a]	Total Employment	Production Employment [b]	Employment in Construction, Installation, Maintenance, and Repair Occupations	
						Number	Share of Prod. Employment
3116	Animal Slaughtering and Processing	3,808	$36,333,693	503,800	458,295	26,807	5.8%
3117	Seafood Product Preparation and Packaging	670	$14,575,219	35,894	29,848	1,814	6.1%
3118	Bakeries and Tortilla Manufacturing	10,072	$5,234,957	288,393	209,171	12,174	5.8%
3119	Other Food Manufacturing	3,205	$21,407,943	161,567	115,081	9,525	8.3%
3121	Beverage Manufacturing	3,556	$20,793,132	134,206	87,083	11,304	13.0%
3122	Tobacco Manufacturing	128	$294,956,118	20,887	15,993	3,038	19.0%
3131	Fiber, Yarn, and Thread Mills	468	$18,783,597	48,240	43,096	6,299	14.6%
3132	Fabric Mills	1,376	$11,516,969	91,959	74,678	8,774	11.7%
3133	Textile and Fabric Finishing and Fabric Coating Mills	1,399	$7,019,640	47,567	35,577	2,239	6.3%
3141	Textile Furnishings Mills	2,568	$8,027,868	81,060	65,433	4,353	6.7%
3149	Other Textile Product Mills	4,158	$2,504,229	74,526	57,640	3,203	5.6%
3151	Apparel Knitting Mills	531	$19,609,387	30,784	25,558	2,356	9.2%
3152	Cut and Sew Apparel Manufacturing	9,490	$1,097,216	168,283	129,778	1,463	1.1%
3159	Apparel Accessories and Other Apparel Manufacturing	946	$2,154,523	17,171	12,995	312	2.4%
3161	Leather and Hide Tanning and Finishing	252	$5,524,049	5,807	4,598	264	5.7%
3162	Footwear Manufacturing	308	$8,227,628	16,616	13,933	377	2.7%
3169	Other Leather and Allied Product Manufacturing	838	$2,714,697	16,174	11,838	148	1.2%
3211	Sawmills and Wood Preservation	4,223	$7,011,185	118,483	102,042	9,363	9.2%

Table V-1, contd.
Profile of General Industry Establishments Covered by Subparts D and I

NAICS	NAICS Description	Establish-ments	Average Receipts per Establishment [a]	Total Employment	Production Employment [b]	Employment in Construction, Installation, Maintenance, and Repair Occupations	
						Number	Share of Prod. Employment
3212	Veneer, Plywood, and Engineered Wood Product Manufacturing	1,956	$12,197,313	124,472	104,546	12,662	12.1%
3219	Other Wood Product Manufacturing	10,556	$4,711,036	333,551	274,004	41,426	15.1%
3221	Pulp, Paper, and Paperboard Mills	597	$112,157,688	138,756	113,868	25,541	22.4%
3222	Converted Paper Product Manufacturing	4,542	$18,965,317	302,674	237,071	19,005	8.0%
3231	Printing and Related Support Activities	33,433	$2,815,173	641,011	406,014	10,268	2.5%
3241	Petroleum and Coal Products Manufacturing	2,448	$111,722,106	102,997	66,574	14,987	22.5%
3251	Basic Chemical Manufacturing	2,433	$45,992,561	161,324	101,376	19,450	19.2%
3252	Resin, Synthetic Rubber, and Artificial Synthetic Fibers and Filaments Manufacturing	1,059	$59,275,434	86,294	57,848	10,932	18.9%
3253	Pesticide, Fertilizer, and Other Agricultural Chemical Manufacturing	928	$20,532,685	29,748	20,265	3,685	18.2%
3254	Pharmaceutical and Medicine Manufacturing	1,886	$92,789,569	249,743	92,487	11,310	12.2%
3255	Paint, Coating, and Adhesive Manufacturing	1,915	$17,095,265	67,337	38,452	2,741	7.1%
3256	Soap, Cleaning Compound, and Toilet Preparation Manufacturing	2,279	$30,617,646	105,506	64,873	7,114	11.0%
3259	Other Chemical Product and Preparation Manufacturing	2,747	$14,693,347	105,112	68,105	6,762	9.9%
3261	Plastics Product Manufacturing	12,341	$12,041,641	740,254	578,972	41,042	7.1%

Table V-1, contd.
Profile of General Industry Establishments Covered by Subparts D and I

NAICS	NAICS Description	Establish-ments	Average Receipts per Establishment [a]	Total Employment	Production Employment [b]	Employment in Construction, Installation, Maintenance, and Repair Occupations	
						Number	Share of Prod. Employment
3262	Rubber Product Manufacturing	2,251	$14,217,509	160,588	132,415	10,275	7.8%
3271	Clay Product and Refractory Manufacturing	1,577	$5,317,927	53,521	40,383	4,229	10.5%
3272	Glass and Glass Product Manufacturing	2,103	$10,171,989	102,364	83,249	9,631	11.6%
3273	Cement and Concrete Product Manufacturing	9,969	$5,507,579	227,739	185,004	33,872	18.3%
3274	Lime and Gypsum Product Manufacturing	357	$18,475,560	17,935	15,101	3,268	21.6%
3279	Other Nonmetallic Mineral Product Manufacturing	3,344	$5,468,993	80,900	63,393	10,569	16.7%
3311	Iron and Steel Mills and Ferroalloy Manufacturing	827	$65,928,896	110,790	93,061	22,737	24.4%
3312	Steel Product Manufacturing from Purchased Steel	698	$21,605,469	47,069	36,966	4,190	11.3%
3313	Alumina and Aluminum Production and Processing	608	$47,054,339	65,387	55,270	9,800	17.7%
3314	Nonferrous Metal (except Aluminum) Production and Processing	945	$24,919,805	59,610	44,304	6,112	13.8%
3315	Foundries	2,207	$12,157,333	167,058	139,685	13,845	9.9%
3321	Forging and Stamping	2,720	$9,147,934	130,140	99,822	7,654	7.7%
3322	Cutlery and Handtool Manufacturing	1,502	$6,875,867	53,633	38,191	2,082	5.5%
3323	Architectural and Structural Metals Manufacturing	13,478	$5,273,124	396,098	296,479	37,319	12.6%

Table V-1, contd.
Profile of General Industry Establishments Covered by Subparts D and I

NAICS	NAICS Description	Establish-ments	Average Receipts per Establishment [a]	Total Employment	Production Employment [b]	Employment in Construction, Installation, Maintenance, and Repair Occupations	
						Number	Share of Prod. Employment
3324	Boiler, Tank, and Shipping Container Manufacturing	1,554	$17,390,735	87,497	56,784	N/A	N/A
3325	Hardware Manufacturing	828	$11,194,203	45,282	32,376	1,596	4.9%
3326	Spring and Wire Product Manufacturing	1,651	$5,585,199	55,759	41,942	1,933	4.6%
3327	Machine Shops; Turned Product; and Screw, Nut, and Bolt Manufacturing	24,860	$2,040,137	386,792	298,357	9,523	3.2%
3328	Coating, Engraving, Heat Treating, and Allied Activities	6,134	$3,426,310	136,411	108,329	5,605	5.2%
3329	Other Fabricated Metal Product Manufacturing	6,337	$8,770,725	272,101	186,186	15,541	8.3%
3331	Agriculture, Construction, and Mining Machinery Manufacturing	2,995	$20,488,525	194,899	137,163	10,659	7.8%
3332	Industrial Machinery Manufacturing	3,883	$7,725,192	131,927	68,269	6,420	9.4%
3333	Commercial and Service Industry Machinery Manufacturing	2,300	$9,406,943	95,489	47,977	4,882	10.2%
3334	Ventilation, Heating, Air-Conditioning, and Commercial Refrigeration Equipment Manufacturing	1,801	$19,910,908	150,277	112,267	12,921	11.5%
3335	Metalworking Machinery Manufacturing	8,181	$3,107,359	173,681	123,948	4,507	3.6%
3336	Engine, Turbine, and Power Transmission Equipment Manufacturing	915	$46,836,712	99,827	66,909	7,951	11.9%

Table V-1, contd.
Profile of General Industry Establishments Covered by Subparts D and I

NAICS	NAICS Description	Establish-ments	Average Receipts per Establishment [a]	Total Employment	Production Employment [b]	Employment in Construction, Installation, Maintenance, and Repair Occupations	
						Number	Share of Prod. Employment
3339	Other General Purpose Machinery Manufacturing	6,242	$10,364,603	280,571	175,993	16,123	9.2%
3341	Computer and Peripheral Equipment Manufacturing	1,323	$43,720,123	102,607	16,572	2,180	13.2%
3342	Communications Equipment Manufacturing	1,876	$36,209,046	152,679	46,763	5,982	12.8%
3343	Audio and Video Equipment Manufacturing	518	$14,666,519	18,939	8,186	564	6.9%
3344	Semiconductor and Other Electronic Component Manufacturing	4,772	$23,066,585	365,417	176,832	10,651	6.0%
3345	Navigational, Measuring, Electromedical, and Control Instruments Manufacturing	5,238	$20,026,780	384,856	123,582	11,800	9.5%
3346	Manufacturing and Reproducing Magnetic and Optical Media	821	$10,519,005	32,987	17,743	1,412	8.0%
3351	Electric Lighting Equipment Manufacturing	1,188	$11,180,632	56,797	39,009	2,820	7.2%
3352	Household Appliance Manufacturing	364	$60,184,733	74,585	50,109	3,244	6.5%
3353	Electrical Equipment Manufacturing	2,397	$13,373,183	138,511	91,165	6,374	7.0%
3359	Other Electrical Equipment and Component Manufacturing	2,160	$17,834,795	149,798	102,304	6,839	6.7%
3361	Motor Vehicle Manufacturing	370	$657,511,204	211,162	174,525	21,551	12.3%
3362	Motor Vehicle Body and Trailer Manufacturing	2,157	$15,581,739	155,649	129,584	10,831	8.4%

Table V-1, contd.
Profile of General Industry Establishments Covered by Subparts D and I

NAICS	NAICS Description	Establish-ments	Average Receipts per Establishment [a]	Total Employment	Production Employment [b]	Employment in Construction, Installation, Maintenance, and Repair Occupations	
						Number	Share of Prod. Employment
3363	Motor Vehicle Parts Manufacturing	5,556	$36,598,197	641,128	500,306	49,561	9.9%
3364	Aerospace Product and Parts Manufacturing	1,653	$89,563,292	397,933	181,978	40,749	22.4%
3365	Railroad Rolling Stock Manufacturing	211	$44,874,806	29,675	21,583	4,646	21.5%
3366	Ship and Boat Building	1,764	$13,764,238	142,057	103,443	27,309	26.4%
3369	Other Transportation Equipment Manufacturing	996	$16,837,953	44,923	32,737	2,679	8.2%
3371	Household and Institutional Furniture and Kitchen Cabinet Manufacturing	16,301	$2,845,652	354,341	288,472	22,235	7.7%
3372	Office Furniture (including Fixtures) Manufacturing	4,094	$5,722,951	143,102	105,671	7,217	6.8%
3379	Other Furniture Related Product Manufacturing	1,054	$8,178,416	45,816	34,075	1,489	4.4%
3391	Medical Equipment and Supplies Manufacturing	12,223	$6,107,312	314,015	197,458	7,070	3.6%
3399	Other Miscellaneous Manufacturing	19,016	$3,513,187	372,081	237,461	17,516	7.4%
4231	Motor Vehicle and Motor Vehicle Parts and Supplies Merchant Wholesalers	24,521	$31,354,335	367,505	166,210	53,010	31.9%
4232	Furniture and Home Furnishing Merchant Wholesalers	12,557	$7,064,656	158,027	52,657	4,127	7.8%
4233	Lumber and Other Construction Materials Merchant Wholesalers	18,940	$10,027,890	274,745	133,322	14,485	10.9%

Table V-1, contd.
Profile of General Industry Establishments Covered by Subparts D and I

NAICS	NAICS Description	Establish-ments	Average Receipts per Establishment [a]	Total Employment	Production Employment [b]	Employment in Construction, Installation, Maintenance, and Repair Occupations	
						Number	Share of Prod. Employment
4234	Professional and Commercial Equipment and Supplies Merchant Wholesalers	36,614	$13,020,195	723,687	148,046	74,444	50.3%
4235	Metal and Mineral (except Petroleum) Merchant Wholesalers	10,656	$14,644,310	158,317	80,310	4,297	5.3%
4236	Electrical and Electronic Goods Merchant Wholesalers	29,230	$13,954,419	466,457	100,502	34,204	34.0%
4237	Hardware, and Plumbing and Heating Equipment and Supplies Merchant Wholesalers	19,155	$6,412,786	231,219	67,442	17,308	25.7%
4238	Machinery, Equipment, and Supplies Merchant Wholesalers	59,039	$6,296,743	714,037	256,632	143,623	56.0%
4239	Miscellaneous Durable Goods Merchant Wholesalers	33,992	$5,977,921	336,259	142,847	17,691	12.4%
4241	Paper and Paper Product Merchant Wholesalers	11,755	$11,175,943	179,820	55,439	2,349	4.2%
4242	Drugs and Druggists' Sundries Merchant Wholesalers	7,634	$34,610,272	257,590	32,439	1,844	5.7%
4243	Apparel, Piece Goods, and Notions Merchant Wholesalers	15,680	$8,758,485	200,985	48,251	714	1.5%
4244	Grocery and Related Product Wholesalers	33,479	$19,821,047	770,899	407,561	17,827	4.4%
4245	Farm Product Raw Material Merchant Wholesalers	6,630	$18,364,754	62,173	38,210	1,317	3.4%
4246	Chemical and Allied Products Merchant Wholesalers	12,477	$9,847,751	141,225	51,281	5,772	11.3%

Table V-1, contd.
Profile of General Industry Establishments Covered by Subparts D and I

NAICS	NAICS Description	Establish-ments	Average Receipts per Establishment [a]	Total Employment	Production Employment [b]	Employment in Construction, Installation, Maintenance, and Repair Occupations	
						Number	Share of Prod. Employment
4247	Petroleum and Petroleum Products Merchant Wholesalers	7,175	$49,353,607	102,753	49,773	6,413	12.9%
4248	Beer, Wine, and Distilled Alcoholic Beverage Merchant Wholesalers	4,136	$25,249,332	178,869	70,900	2,233	3.1%
4249	Miscellaneous Nondurable Goods Merchant Wholesalers	31,788	$8,167,972	373,421	152,036	6,106	4.0%
4251	Wholesale Electronic Markets and Agents and Brokers	54,494	$5,145,093	332,659	61,002	13,042	21.4%
4411	Automobile Dealers	52,172	$14,366,952	1,286,788	511,806	326,353	63.8%
4412	Other Motor Vehicle Dealers	16,792	$3,798,159	167,374	63,763	50,382	79.0%
4413	Automotive Parts, Accessories, and Tire Stores	59,439	$1,337,738	493,354	222,874	157,588	70.7%
4421	Furniture Stores	29,245	$2,037,962	282,668	72,530	3,751	5.2%
4422	Home Furnishings Stores	36,609	$1,383,751	295,407	52,993	26,108	49.3%
4431	Electronics and Appliance Stores	49,323	$2,089,112	488,784	82,670	61,295	74.1%
4441	Building Material and Supplies Dealers	67,330	$4,395,212	1,190,989	251,146	47,115	18.8%
4442	Lawn and Garden Equipment and Supplies Stores	20,492	$1,847,574	175,415	68,828	18,088	26.3%
4451	Grocery Stores	94,176	$4,841,064	2,615,175	464,487	4,048	0.9%
4452	Specialty Food Stores	27,968	$625,965	168,728	41,339	753	1.8%
4453	Beer, Wine, and Liquor Stores	30,231	$1,116,580	142,586	5,103	124	2.4%
4461	Health and Personal Care Stores	87,026	$2,866,179	1,113,634	60,540	4,241	7.0%
4471	Gasoline Stations	116,855	$2,272,512	913,467	88,679	33,582	37.9%
4481	Clothing Stores	95,666	$1,567,430	1,259,686	40,721	777	1.9%
4482	Shoe Stores	26,699	$998,855	201,079	2,150	31	1.5%

Table V-1, contd.
Profile of General Industry Establishments Covered by Subparts D and I

NAICS	NAICS Description	Establish-ments	Average Receipts per Establishment [a]	Total Employment	Production Employment [b]	Employment in Construction, Installation, Maintenance, and Repair Occupations	
						Number	Share of Prod. Employment
4483	Jewelry, Luggage, and Leather Goods Stores	29,656	$991,170	170,685	15,704	1,748	11.1%
4511	Sporting Goods, Hobby, and Musical Instrument Stores	43,013	$1,382,881	442,281	32,452	16,648	51.3%
4512	Book, Periodical, and Music Stores	17,502	$1,331,320	195,732	2,677	176	6.6%
4521	Department Stores	9,969	$26,975,048	1,532,456	97,111	11,463	11.8%
4529	Other General Merchandise Stores	36,745	$7,905,058	1,269,995	139,416	20,840	14.9%
4531	Florists	20,227	$325,333	98,373	21,593	182	0.8%
4532	Office Supplies, Stationery, and Gift Stores	41,238	$1,065,158	337,789	22,619	10,593	46.8%
4533	Used Merchandise Stores	17,650	$541,375	133,533	18,718	1,270	6.8%
4539	Other Miscellaneous Store Retailers	45,977	$1,047,095	270,150	35,802	14,177	39.6%
4541	Electronic Shopping and Mail-Order Houses	16,230	$8,015,835	263,979	33,756	2,123	6.3%
4542	Vending Machine Operators	5,256	$1,345,227	51,645	30,142	16,645	55.2%
4543	Direct Selling Establishments	26,833	$1,781,365	206,114	110,690	32,337	29.2%
4811	Scheduled Air Transportation	3,072	$27,568,446	432,485	136,631	35,968	26.3%
4812	Nonscheduled Air Transportation	2,538	$4,983,338	42,289	24,981	6,909	27.7%
4831	Deep Sea, Coastal, and Great Lakes Water Transportation	1,262	$18,563,075	47,510	22,873	1,376	6.0%
4832	Inland Water Transportation	663	$7,369,971	20,928	16,654	629	3.8%
4841	General Freight Trucking	67,305	$2,179,183	1,049,957	868,948	49,841	5.7%
4842	Specialized Freight Trucking	52,958	$1,336,656	482,356	385,621	26,392	6.8%
4851	Urban Transit Systems	912	$3,163,984	49,414	41,850	5,324	12.7%

Table V-1, contd.
Profile of General Industry Establishments Covered by Subparts D and I

NAICS	NAICS Description	Establish-ments	Average Receipts per Establishment [a]	Total Employment	Production Employment [b]	Employment in Construction, Installation, Maintenance, and Repair Occupations	
						Number	Share of Prod. Employment
4852	Interurban and Rural Bus Transportation	475	$2,292,160	16,465	10,852	1,019	9.4%
4853	Taxi and Limousine Service	7,013	$758,126	69,226	49,525	1,746	3.5%
4854	School and Employee Bus Transportation	4,321	$1,780,332	194,765	167,606	6,698	4.0%
4855	Charter Bus Industry	1,207	$1,629,704	27,929	22,675	1,585	7.0%
4859	Other Transit and Ground Passenger Transportation	3,296	$1,025,226	60,919	46,438	1,813	3.9%
4861	Pipeline Transportation of Crude Oil	373	$15,628,109	7,529	4,388	1,491	34.0%
4862	Pipeline Transportation of Natural Gas	1,363	$15,036,768	22,248	11,192	4,546	40.6%
4869	Other Pipeline Transportation	917	$9,607,982	9,419	7,365	1,765	24.0%
4871	Scenic and Sightseeing Transportation, Land	678	$1,076,889	9,218	4,417	376	8.5%
4872	Scenic and Sightseeing Transportation, Water	1,857	$875,903	15,280	6,968	385	5.5%
4879	Scenic and Sightseeing Transportation, Other	185	$2,508,165	2,171	1,075	335	31.1%
4881	Support Activities for Air Transportation	5,174	$3,432,026	158,320	92,274	44,549	48.3%
4882	Support Activities for Rail Transportation	962	$3,451,614	28,090	23,624	9,497	40.2%
4883	Support Activities for Water Transportation	2,331	$5,519,986	91,795	74,809	5,656	7.6%
4884	Support Activities for Road Transportation	9,545	$669,810	71,831	51,284	3,923	7.7%

Table V-1, contd.
Profile of General Industry Establishments Covered by Subparts D and I

NAICS	NAICS Description	Establish-ments	Average Receipts per Establishment [a]	Total Employment	Production Employment [b]	Employment in Construction, Installation, Maintenance, and Repair Occupations	
						Number	Share of Prod. Employment
4885	Freight Transportation Arrangement	17,434	$2,204,247	198,326	43,795	1,940	4.4%
4889	Other Support Activities for Transportation	1,637	$2,426,030	31,227	22,544	950	4.2%
4921	Couriers	8,724	$7,426,946	525,610	388,495	12,977	3.3%
4922	Local Messengers and Local Delivery	5,066	$732,446	45,773	19,473	149	0.8%
4931	Warehousing and Storage	13,849	$5,990,263	595,325	392,261	18,718	4.8%
5111	Newspaper, Periodical, Book, and Directory Publishers	23,080	$6,508,148	699,906	135,170	5,668	4.2%
5112	Software Publishers	8,741	$13,922,013	339,833	4,827	2,276	47.2%
5121	Motion Picture and Video Industries	20,396	$4,114,085	308,750	11,872	2,634	22.2%
5122	Sound Recording Industries	3,565	$3,257,430	22,481	820	233	28.4%
5151	Radio and Television Broadcasting	9,910	$6,128,916	262,248	4,551	2,872	63.1%
5152	Cable and Other Subscription Programming	673	$35,828,634	39,735	10,883	10,646	97.8%
5161	Internet Publishing and Broadcasting	2,653	$6,525,331	41,588	N/A	N/A	N/A
5171	Wired Telecommunications Carriers	27,159	$8,279,458	634,540	218,709	214,137	97.9%
5172	Wireless Telecommunications Carriers (except Satellite)	12,108	$6,135,232	241,407	13,885	13,503	97.2%
5173	Telecommunications Resellers	2,557	$3,831,183	32,352	N/A	N/A	N/A
5174	Satellite Telecommunications	581	$10,533,017	11,514	1,786	1,786	100.0%
5175	Cable and Other Program Distribution	4,816	$13,161,700	231,756	N/A	N/A	N/A

Table V-1, contd.
Profile of General Industry Establishments Covered by Subparts D and I

NAICS	NAICS Description	Establish-ments	Average Receipts per Establishment [a]	Total Employment	Production Employment [b]	Employment in Construction, Installation, Maintenance, and Repair Occupations	
						Number	Share of Prod. Employment
5179	Other Telecommunications	541	$6,529,383	10,197	2,263	2,247	99.3%
5181	Internet Service Providers and Web Search Portals	5,572	$4,972,021	80,208	N/A	N/A	N/A
5182	Data Processing, Hosting, and Related Services	15,430	$4,799,373	385,110	12,762	5,078	39.8%
5191	Other Information Services	4,163	$1,509,730	54,621	1,456	222	15.3%
5211	Monetary Authorities - Central Bank	108	$274,330,879	20,019	651	428	65.7%
5221	Depository Credit Intermediation	120,588	$6,448,988	2,155,349	11,985	4,070	34.0%
5222	Nondepository Credit Intermediation	59,388	$8,333,142	765,267	3,409	1,299	38.1%
5223	Activities Related to Credit Intermediation	44,647	$2,161,669	360,912	1,885	1,065	56.5%
5231	Securities and Commodity Contracts Intermediation and Brokerage	39,360	$7,610,676	516,295	1,491	490	32.9%
5232	Securities and Commodity Exchanges	442	$11,417,563	8,526	383	149	38.9%
5239	Other Financial Investment Activities	46,752	$3,555,322	416,511	3,357	1,075	32.0%
5241	Insurance Carriers	34,417	$42,343,735	1,438,696	8,794	4,071	46.3%
5242	Agencies, Brokerages, and Other Insurance Related Activities	145,744	$1,161,943	939,126	3,941	1,138	28.9%
5259	Other Investment Pools and Funds	2,883	$10,933,178	26,397	763	327	42.9%
5311	Lessors of Real Estate	117,629	$1,184,281	544,635	229,957	145,070	63.1%
5312	Offices of Real Estate Agents and Brokers	114,041	$984,181	377,256	40,807	25,208	61.8%

Table V-1, contd.
Profile of General Industry Establishments Covered by Subparts D and I

NAICS	NAICS Description	Establish-ments	Average Receipts per Establishment [a]	Total Employment	Production Employment [b]	Employment in Construction, Installation, Maintenance, and Repair Occupations	
						Number	Share of Prod. Employment
5313	Activities Related to Real Estate	81,802	$1,005,517	631,478	201,842	124,674	61.8%
5321	Automotive Equipment Rental and Leasing	13,624	$3,056,687	184,468	84,896	24,341	28.7%
5322	Consumer Goods Rental	33,308	$739,777	253,627	41,794	7,689	18.4%
5323	General Rental Centers	5,569	$848,764	35,885	15,955	5,648	35.4%
5324	Commercial and Industrial Machinery and Equipment Rental and Leasing	13,818	$3,304,043	159,968	75,035	41,306	55.0%
5331	Lessors of Nonfinancial Intangible Assets (except Copyrighted Works)	2,337	$10,332,742	29,486	1,927	316	16.4%
5411	Legal Services	189,484	$1,165,746	1,219,383	5,352	583	10.9%
5412	Accounting, Tax Preparation, Bookkeeping, and Payroll Services	121,390	$970,564	1,356,770	26,504	7,473	28.2%
5413	Architectural, Engineering, and Related Services	115,277	$1,961,884	1,390,573	117,897	58,167	49.3%
5414	Specialized Design Services	33,755	$634,257	130,062	17,199	2,119	12.3%
5415	Computer Systems Design and Related Services	110,851	$2,016,788	1,215,296	27,215	20,251	74.4%
5416	Management, Scientific, and Technical Consulting Services	145,782	$1,228,565	1,039,301	65,298	26,079	39.9%
5417	Scientific Research and Development Services	17,153	$8,345,540	672,666	34,241	12,816	37.4%
5418	Advertising and Related Services	39,350	$1,814,725	433,800	38,461	7,132	18.5%
5419	Other Professional, Scientific, and Technical Services	73,431	$851,957	596,243	24,607	4,103	16.7%

Table V-1, contd.
Profile of General Industry Establishments Covered by Subparts D and I

NAICS	NAICS Description	Establish-ments	Average Receipts per Establishment [a]	Total Employment	Production Employment [b]	Employment in Construction, Installation, Maintenance, and Repair Occupations	
						Number	Share of Prod. Employment
5511	Management of Companies and Enterprises	48,311	$8,420,195	2,915,644	242,097	81,896	33.8%
5611	Office Administrative Services	29,228	$2,295,927	497,872	38,199	11,832	31.0%
5612	Facilities Support Services	4,115	$4,465,124	164,637	51,857	21,563	41.6%
5613	Employment Services	43,523	$4,127,040	5,101,697	2,478,063	361,451	14.6%
5614	Business Support Services	35,750	$1,746,545	778,731	18,101	4,546	25.1%
5615	Travel Arrangement and Reservation Services	23,268	$1,343,275	253,539	10,213	1,729	16.9%
5616	Investigation and Security Services	24,752	$1,631,472	802,010	65,852	57,213	86.9%
5617	Services to Buildings and Dwellings	176,310	$549,348	1,707,203	1,531,836	53,404	3.5%
5619	Other Support Services	21,470	$1,737,422	352,603	121,672	21,023	17.3%
5621	Waste Collection	8,890	$3,545,148	176,912	143,223	15,947	11.1%
5622	Waste Treatment and Disposal	2,759	$5,137,267	56,343	39,495	9,903	25.1%
5629	Remediation and Other Waste Management Services	8,270	$1,879,261	112,079	81,625	58,392	71.5%
6111	Elementary and Secondary Schools	20,570	$2,394,633	802,963	72,214	9,365	13.0%
6112	Junior Colleges	881	$3,867,039	85,892	4,830	1,466	30.3%
6113	Colleges, Universities, and Professional Schools	3,872	$32,761,430	1,534,226	117,250	39,759	33.9%
6114	Business Schools and Computer and Management Training	7,156	$1,247,327	67,537	1,579	476	30.2%
6115	Technical and Trade Schools	7,712	$1,523,403	119,970	8,857	2,494	28.2%
6116	Other Schools and Instruction	35,693	$410,958	292,730	5,279	1,527	28.9%
6117	Educational Support Services	6,763	$1,348,119	76,196	1,422	189	13.3%

Table V-1, contd.
Profile of General Industry Establishments Covered by Subparts D and I

NAICS	NAICS Description	Establish-ments	Average Receipts per Establishment [a]	Total Employment	Production Employment [b]	Employment in Construction, Installation, Maintenance, and Repair Occupations	
						Number	Share of Prod. Employment
6211	Offices of Physicians	216,620	$1,472,044	2,136,673	22,467	3,829	17.0%
6212	Offices of Dentists	124,553	$710,330	817,396	12,367	411	3.3%
6213	Offices of Other Health Practitioners	118,818	$436,205	589,355	8,700	628	7.2%
6214	Outpatient Care Centers	28,539	$2,969,216	692,430	15,538	4,664	30.0%
6215	Medical and Diagnostic Laboratories	12,063	$3,068,470	228,067	2,357	499	21.2%
6216	Home Health Care Services	21,576	$2,162,602	972,511	5,495	1,202	21.9%
6219	Other Ambulatory Health Care Services	8,738	$2,971,026	246,853	20,838	2,920	14.0%
6221	General Medical and Surgical Hospitals	5,320	$109,940,645	4,953,821	279,488	63,495	22.7%
6222	Psychiatric and Substance Abuse Hospitals	677	$24,296,943	216,745	15,489	4,959	32.0%
6223	Specialty (except Psychiatric and Substance Abuse) Hospitals	846	$25,662,093	199,974	10,503	2,480	23.6%
6231	Nursing Care Facilities	17,267	$4,947,927	1,640,524	169,519	21,780	12.8%
6232	Residential Mental Retardation, Mental Health and Substance Abuse Facilities	30,658	$763,353	553,058	20,857	5,229	25.1%
6233	Community Care Facilities for the Elderly	19,303	$1,699,891	640,128	72,757	13,831	19.0%
6239	Other Residential Care Facilities	6,648	$1,227,379	159,423	6,186	2,264	36.6%
6241	Individual and Family Services	55,656	$1,029,718	1,075,387	46,086	5,345	11.6%
6242	Community Food and Housing, and Emergency and Other Relief Services	13,021	$1,145,759	159,534	14,857	4,068	27.4%

Table V-1, contd.
Profile of General Industry Establishments Covered by Subparts D and I

NAICS	NAICS Description	Establish-ments	Average Receipts per Establishment [a]	Total Employment	Production Employment [b]	Employment in Construction, Installation, Maintenance, and Repair Occupations	
						Number	Share of Prod. Employment
6243	Vocational Rehabilitation Services	8,393	$1,452,550	338,121	78,281	3,752	4.8%
6244	Child Day Care Services	73,755	$371,692	831,361	17,660	1,699	9.6%
7111	Performing Arts Companies	9,195	$1,383,714	133,511	9,172	3,682	40.1%
7112	Spectator Sports	4,564	$5,969,303	120,281	19,417	6,972	35.9%
7113	Promoters of Performing Arts, Sports, and Similar Events	5,779	$2,195,804	107,105	20,164	4,253	21.1%
7114	Agents and Managers for Artists, Athletes, Entertainers, and Other Public Figures	3,494	$1,242,041	16,417	145	77	52.9%
7115	Independent Artists, Writers, and Performers	19,398	$587,069	47,600	3,889	996	25.6%
7121	Museums, Historical Sites, and Similar Institutions	7,089	$1,414,378	123,177	15,099	4,533	30.0%
7131	Amusement Parks and Arcades	2,927	$3,935,750	136,390	20,121	8,123	40.4%
7132	Gambling Industries	2,600	$10,415,846	195,977	22,600	5,976	26.4%
7139	Other Amusement and Recreation Industries	68,002	$826,561	1,093,197	210,259	43,709	20.8%
7211	Traveler Accommodation	53,290	$2,853,736	1,830,579	685,498	83,510	12.2%
7212	RV (Recreational Vehicle) Parks and Recreational Camps	7,190	$557,840	38,308	13,259	4,989	37.6%
7213	Rooming and Boarding Houses	2,245	$592,294	11,811	3,912	587	15.0%
7221	Full-Service Restaurants	213,550	$878,192	4,518,780	56,442	3,362	6.0%
7222	Limited-Service Eating Places	256,383	$658,733	4,073,818	186,084	4,363	2.3%
7223	Special Food Services	33,499	$1,113,710	546,347	48,646	5,505	11.3%
7224	Drinking Places (Alcoholic Beverages)	46,097	$395,658	361,583	6,288	709	11.3%

Table V-1, contd.
Profile of General Industry Establishments Covered by Subparts D and I

NAICS	NAICS Description	Establish-ments	Average Receipts per Establishment [a]	Total Employment	Production Employment [b]	Employment in Construction, Installation, Maintenance, and Repair Occupations	
						Number	Share of Prod. Employment
8111	Automotive Repair and Maintenance	164,334	$529,294	888,301	713,789	461,065	64.6%
8112	Electronic and Precision Equipment Repair and Maintenance	13,199	$1,373,334	127,477	75,896	66,349	87.4%
8113	Commercial and Industrial Machinery and Equipment (except Automotive and Electronic) Repair and Maintenance	24,589	$1,112,510	193,442	143,815	94,461	65.7%
8114	Personal and Household Goods Repair and Maintenance	23,413	$368,721	98,001	74,709	36,972	49.5%
8121	Personal Care Services	109,974	$236,768	612,980	6,790	366	5.4%
8122	Death Care Services	21,204	$718,757	136,806	29,518	1,584	5.4%
8123	Dry-cleaning and Laundry Services	42,270	$577,876	374,377	265,380	7,445	2.8%
8129	Other Personal Services	36,324	$499,974	233,628	106,715	3,116	2.9%
8131	Religious Organizations	174,530	$541,280	1,647,219	213,502	45,466	21.3%
8132	Grantmaking and Giving Services	16,086	$3,430,139	149,045	4,107	688	16.8%
8133	Social Advocacy Organizations	14,260	$1,059,616	122,910	6,460	1,551	24.0%
8134	Civic and Social Organizations	30,620	$572,399	328,324	21,759	3,399	15.6%
8139	Business, Professional, Labor, Political, and Similar Organizations	65,637	$1,095,583	546,048	55,539	23,714	42.7%
	Totals	6,744,565	N/A	112,008,852	27,974,888	5,269,819	18.8%

Table V-1, contd.
Profile of General Industry Establishments Covered by Subparts D and I

NAICS	NAICS Description	Establish-ments	Average Receipts per Establishment [a]	Total Employment	Production Employment [b]	Employment in Construction, Installation, Maintenance, and Repair Occupations	
						Number	Share of Prod. Employment

[a] Estimated based on 2002 receipts and payroll data from U.S. Census Bureau, *Statistics of U.S. Businesses*, 2002 and payroll data from U.S. Census Bureau, *Statistics of U.S. Businesses*, 2006. Receipts for 2006 were estimated assuming the ratio of receipts to payroll remained unchanged between 2002 and 2006.

[b] Based on the employment share of workers employed in building and grounds; construction; installation, maintenance, and repair; production; and material moving occupations as reported by BLS, *Occupational Employment Statistics*, 2008.

Source: U.S. Dept. of Labor, OSHA, Directorate of Evaluation and Analysis, Office of Regulatory Analysis, based on ERG, 2007; U.S. Census Bureau, *Statistics of U.S. Businesses*, 2002, 2006; and Bureau of Labor Statistics, *Occupational Employment Statistics*, 2008.

BILLING CODE 4510–29–C

Parts of the proposed standard that cover ladders, scaffolds, manhole steps, and other working surfaces are most likely to directly affect employees engaged in maintenance and related activities. To estimate the numbers of such employees, OSHA relied on data from Bureau of Labor Statistics' (BLS) *Occupational Employment Statistics* (OES) survey that documents employment by detailed occupation on a 4-digit NAICS industry basis. The BLS data represent the only source of industry-specific statistics on detailed occupational employment totals. OSHA used these data to estimate the numbers of employees in construction, and in maintenance, installation, and repair occupations in each industry and the overall number of production employees (ERG 2007, Ex. 6).[14]

Because industry employment totals reported by the OES are not identical to those estimated by the U.S. Census Bureau, OSHA used the ratios of production to total employment as reported by OES and multiplied total employment as reported by Census by this ratio to estimate the numbers of production employees and employees in maintenance-related occupations for each NAICS industry covered by the proposed subpart D and I standards. As shown in Table V–1, an estimated 28.0 million employees are employed in production occupations, while an estimated 5.3 million are employed in construction, installation, and maintenance and repair occupations.

Profile of Potentially Affected Small Entities

To assemble the data that are necessary for a screening analysis to judge potential impacts as prescribed by the Small Business Regulatory Enforcement Fairness Act (SBREFA), OSHA developed profiles of small entities in the industries covered by the proposed OSHA standards for subparts D and I. First, ERG used the Small Business Administration's (SBA) small business criterion for each industry and Census data (taken from the *Statistics of U.S. Businesses*) on employment, payroll, and receipts by entity size to estimate the numbers of entities and associated employment meeting the SBA definitions (ERG, 2007, Ex. 6). Where the SBA small business criterion was specified as a revenue threshold, OSHA used the Census data to associate that revenue with a given employment size. OSHA's estimates of SBA-based employment-size criteria are shown in the first column in Table V–2. The table shows, by NAICS category, the number of entities and employees and average receipts per entity for business units that meet the employment-size criterion. The numbers of at-risk employees are estimated assuming the same percentage of total employment as that derived in Table V–1.

Based on analysis by ERG (ERG, 2007, Ex. 6), OSHA also used the Census data to develop a profile of entities that employ fewer than 20 employees. These estimates are shown in Table V–3.

BILLING CODE 4510–29–P

[14] Production workers include those in building and grounds; construction; installation, maintenance, and repair; production; and material moving occupations. It is conceivable that employees in construction and related occupations, even though not employed by establishments in construction industries, might on occasion perform work that would be regulated by OSHA under its construction standards in § 1926. To the extent this is true, their employers might also be required to meet the requirements for fall protection and walking and working surfaces as specified in the construction standards.

Table V-2
Profile of General Industry Small Business Entities

NAICS	NAICS DESCRIPTION	SBA Employment Size Criterion [a]	Entities [b]	Average Receipts per Entity [c]	Total Employees	Estimated Employment in At-Risk Occupations [d]
1131	Timber Tract Operations	500	391	$1,358,331	1,863	N/A
1132	Forest Nurseries and Gathering of Forest Products	500	169	$835,023	1,521	N/A
1133	Logging	500	9,954	$905,349	58,477	2,525
1141	Fishing	20	1,963	$419,493	2,504	N/A
1142	Hunting and Trapping	20	331	$265,407	832	N/A
1153	Support Activities for Forestry	100	1,581	$673,432	8,844	N/A
2111	Oil and Gas Extraction	500	6,513	$6,018,985	45,753	9,331
2211	Electric Power Generation, Transmission and Distribution	20	627	$7,768,331	3,560	1,190
2212	Natural Gas Distribution	20	360	$9,483,461	1,736	522
2213	Water, Sewage and Other Systems	100	4,357	$1,055,245	21,415	4,709
3111	Animal Food Manufacturing	500	1,153	$10,049,222	24,013	1,716
3112	Grain and Oilseed Milling	500	419	$20,443,453	15,124	1,318
3113	Sugar and Confectionery Product Manufacturing	500	1,543	$4,171,065	30,724	2,630
3114	Fruit and Vegetable Preserving and Specialty Food Manufacturing	500	1,206	$11,860,248	51,814	4,698
3115	Dairy Product Manufacturing	500	1,008	$15,673,641	37,924	2,739
3116	Animal Slaughtering and Processing	500	3,044	$7,627,917	84,467	4,494
3117	Seafood Product Preparation and Packaging	500	553	$8,943,608	20,392	1,030
3118	Bakeries and Tortilla Manufacturing	500	9,170	$1,542,448	142,869	6,031
3119	Other Food Manufacturing	500	2,627	$7,971,176	80,534	4,748
3121	Beverage Manufacturing	500	2,921	$4,657,774	48,408	4,077
3122	Tobacco Manufacturing	500	80	$15,462,776	2,442	355
3131	Fiber, Yarn, and Thread Mills	500	283	$4,845,605	8,705	1,137

Table V-2, contd.
Profile of General Industry Small Business Entities

NAICS	NAICS DESCRIPTION	SBA Employment Size Criterion [a]	Entities [b]	Average Receipts per Entity [c]	Total Employees	Estimated Employment in At-Risk Occupations [d]
3132	Fabric Mills	500	1,107	$5,018,553	37,383	1,137
3133	Textile and Fabric Finishing and Fabric Coating Mills	500	1,281	$4,134,978	28,303	3,567
3141	Textile Furnishings Mills	500	2,381	$2,180,425	31,993	1,333
3149	Other Textile Product Mills	500	3,982	$1,712,785	59,829	1,718
3151	Apparel Knitting Mills	500	467	$3,541,300	15,549	2,571
3152	Cut and Sew Apparel Manufacturing	500	9,286	$1,875,985	137,898	1,190
3159	Apparel Accessories and Other Apparel Manufacturing	500	907	$1,684,270	13,360	1,199
3161	Leather and Hide Tanning and Finishing	500	237	$4,006,835	4,331	243
3162	Footwear Manufacturing	500	269	$2,610,054	5,553	197
3169	Other Leather and Allied Product Manufacturing	500	815	$2,099,196	12,592	126
3211	Sawmills and Wood Preservation	500	3,705	$4,968,801	83,498	115
3212	Veneer, Plywood, and Engineered Wood Product Manufacturing	500	1,456	$6,254,693	62,892	6,598
3219	Other Wood Product Manufacturing	500	9,431	$2,824,759	196,897	6,398
3221	Pulp, Paper, and Paperboard Mills	750	271	$179,036,154	101,241	24,454
3222	Converted Paper Product Manufacturing	750	2,996	$23,474,269	249,350	18,636
3231	Printing and Related Support Activities	500	31,581	$1,757,509	441,149	15,657
3241	Petroleum and Coal Products Manufacturing	500	1,049	$18,449,956	24,740	7,067
3251	Basic Chemical Manufacturing	500	1,159	$14,594,931	35,241	3,600
3252	Resin, Synthetic Rubber, and Artificial Synthetic Fibers and Filaments Manufacturing	750	719	$67,088,815	68,083	4,249
3253	Pesticide, Fertilizer, and Other Agricultural Chemical Manufacturing	500	622	$7,489,706	11,401	8,625
3254	Pharmaceutical and Medicine Manufacturing	500	1,335	$11,903,218	50,159	1,412
3255	Paint, Coating, and Adhesive Manufacturing	500	1,422	$6,152,968	29,856	2,271
3256	Soap, Cleaning Compound, and Toilet Preparation Manufacturing	500	1,949	$7,109,671	46,445	1,215

Table V-2, contd.
Profile of General Industry Small Business Entities

NAICS	NAICS DESCRIPTION	SBA Employment Size Criterion [a]	Entities [b]	Average Receipts per Entity [c]	Total Employees	Estimated Employment in At-Risk Occupations [d]
3259	Other Chemical Product and Preparation Manufacturing	500	2,004	$6,504,047	44,662	2,873
3261	Plastics Product Manufacturing	500	9,231	$6,062,317	345,971	19,182
3262	Rubber Product Manufacturing	500	1,622	$5,163,370	52,241	3,343
3271	Clay Product and Refractory Manufacturing	500	1,308	$2,635,824	25,306	2,000
3272	Glass and Glass Product Manufacturing	500	1,710	$2,460,234	29,930	2,816
3273	Cement and Concrete Product Manufacturing	500	5,045	$5,176,795	130,027	19,339
3274	Lime and Gypsum Product Manufacturing	500	209	$4,031,892	3,542	645
3279	Other Nonmetallic Mineral Product Manufacturing	500	2,789	$2,842,186	49,769	6,502
3311	Iron and Steel Mills and Ferroalloy Manufacturing	750	687	$58,252,886	82,270	16,884
3312	Steel Product Manufacturing from Purchased Steel	1000	550	$25,969,191	44,638	3,974
3313	Alumina and Aluminum Production and Processing	750	432	$50,853,839	51,035	7,649
3314	Nonferrous Metal (except Aluminum) Production and Processing	750	726	$25,717,142	47,678	4,888
3315	Foundries	500	1,825	$5,884,190	77,538	6,426
3321	Forging and Stamping	500	2,307	$6,270,743	83,059	4,885
3322	Cutlery and Handtool Manufacturing	500	1,321	$3,461,191	28,452	1,104
3323	Architectural and Structural Metals Manufacturing	500	12,255	$3,548,264	270,425	25,479
3324	Boiler, Tank, and Shipping Container Manufacturing	500	1,199	$6,512,422	42,857	N/A
3325	Hardware Manufacturing	500	682	$4,398,682	18,979	669
3326	Spring and Wire Product Manufacturing	500	1,423	$3,982,136	39,756	1,378
3327	Machine Shops; Turned Product; and Screw, Nut, and Bolt Manufacturing	500	24,251	$1,757,906	345,102	8,497
3328	Coating, Engraving, Heat Treating, and Allied Activities	500	5,471	$2,620,866	113,731	4,673
3329	Other Fabricated Metal Product Manufacturing	500	5,544	$3,765,931	127,400	7,276

Table V-2, contd.
Profile of General Industry Small Business Entities

NAICS	NAICS DESCRIPTION	SBA Employment Size Criterion [a]	Entities [b]	Average Receipts per Entity [c]	Total Employees	Estimated Employment in At-Risk Occupations [d]
3331	Agriculture, Construction, and Mining Machinery Manufacturing	500	2,531	$5,587,664	73,190	4,003
3332	Industrial Machinery Manufacturing	500	3,546	$4,551,450	84,949	4,134
3333	Commercial and Service Industry Machinery Manufacturing	500	2,021	$4,466,470	49,618	2,537
3334	Ventilation, Heating, Air-Conditioning, and Commercial Refrigeration Equipment Manufacturing	500	1,383	$6,248,917	46,872	4,030
3335	Metalworking Machinery Manufacturing	500	7,751	$2,382,254	138,837	3,603
3336	Engine, Turbine, and Power Transmission Equipment Manufacturing	500	677	$6,636,256	22,166	1,765
3339	Other General Purpose Machinery Manufacturing	500	5,307	$4,635,286	134,740	7,743
3341	Computer and Peripheral Equipment Manufacturing	1000	1,253	$42,895,671	95,600	2,031
3342	Communications Equipment Manufacturing	750	1,614	$32,432,225	120,836	4,734
3343	Audio and Video Equipment Manufacturing	750	493	$13,163,802	16,145	481
3344	Semiconductor and Other Electronic Component Manufacturing	500	4,007	$5,850,485	136,248	3,971
3345	Navigational, Measuring, Electromedical, and Control Instruments Manufacturing	500	4,276	$4,683,646	99,665	3,056
3346	Manufacturing and Reproducing Magnetic and Optical Media	500	753	$3,520,000	13,136	562
3351	Electric Lighting Equipment Manufacturing	500	1,060	$5,167,163	29,439	1,462
3352	Household Appliance Manufacturing	500	273	$9,457,971	8,303	361
3353	Electrical Equipment Manufacturing	750	2,027	$12,757,513	112,133	5,160
3359	Other Electrical Equipment and Component Manufacturing	500	1,680	$6,688,321	59,145	2,700
3361	Motor Vehicle Manufacturing	1000	294	$754,499,871	192,800	19,677
3362	Motor Vehicle Body and Trailer Manufacturing	500	1,790	$6,119,572	63,409	4,412

Table V-2, contd.
Profile of General Industry Small Business Entities

NAICS	NAICS DESCRIPTION	SBA Employment Size Criterion [a]	Entities [b]	Average Receipts per Entity [c]	Total Employees	Estimated Employment in At-Risk Occupations [d]
3363	Motor Vehicle Parts Manufacturing	500	4,100	$7,778,032	162,858	12,589
3364	Aerospace Product and Parts Manufacturing	1000	1,280	$106,021,841	365,780	37,456
3365	Railroad Rolling Stock Manufacturing	1000	156	$56,142,525	27,504	4,306
3366	Ship and Boat Building	500	1,587	$4,619,732	44,166	8,490
3369	Other Transportation Equipment Manufacturing	500	930	$3,608,050	18,088	1,079
3371	Household and Institutional Furniture and Kitchen Cabinet Manufacturing	500	15,751	$1,517,495	209,207	13,128
3372	Office Furniture (including Fixtures) Manufacturing	500	3,833	$3,289,859	95,092	4,795
3379	Other Furniture Related Product Manufacturing	500	893	$4,370,007	24,501	796
3391	Medical Equipment and Supplies Manufacturing	500	11,222	$1,991,284	146,829	3,306
3399	Other Miscellaneous Manufacturing	500	18,301	$2,265,972	268,273	12,629
4231	Motor Vehicle and Motor Vehicle Parts and Supplies Merchant Wholesalers	100	16,947	$3,982,634	158,553	22,870
4232	Furniture and Home Furnishing Merchant Wholesalers	100	10,534	$3,893,902	93,383	2,439
4233	Lumber and Other Construction Materials Merchant Wholesalers	100	12,053	$5,108,372	125,540	6,619
4234	Professional and Commercial Equipment and Supplies Merchant Wholesalers	100	25,574	$3,143,839	218,700	22,497
4235	Metal and Mineral (except Petroleum) Merchant Wholesalers	100	7,008	$7,602,393	76,449	2,075
4236	Electrical and Electronic Goods Merchant Wholesalers	100	18,906	$5,616,433	173,667	12,735
4237	Hardware, and Plumbing and Heating Equipment and Supplies Merchant Wholesalers	100	10,687	$4,924,677	112,079	8,390
4238	Machinery, Equipment, and Supplies Merchant Wholesalers	100	41,847	$3,758,547	397,706	79,996
4239	Miscellaneous Durable Goods Merchant Wholesalers	100	30,319	$3,743,447	206,436	10,861
4241	Paper and Paper Product Merchant Wholesalers	100	8,831	$3,843,726	75,470	986

Table V-2, contd.
Profile of General Industry Small Business Entities

NAICS	NAICS DESCRIPTION	SBA Employment Size Criterion [a]	Entities [b]	Average Receipts per Entity [c]	Total Employees	Estimated Employment in At-Risk Occupations [d]
4242	Drugs and Druggists' Sundries Merchant Wholesalers	100	5,771	$4,940,697	46,688	334
4243	Apparel, Piece Goods, and Notions Merchant Wholesalers	100	14,025	$4,050,696	104,550	371
4244	Grocery and Related Product Wholesalers	100	26,011	$5,663,995	246,923	5,710
4245	Farm Product Raw Material Merchant Wholesalers	100	3,917	$11,859,655	39,615	839
4246	Chemical and Allied Products Merchant Wholesalers	100	8,109	$4,728,950	67,260	2,749
4247	Petroleum and Petroleum Products Merchant Wholesalers	100	4,585	$17,758,022	50,746	3,167
4248	Beer, Wine, and Distilled Alcoholic Beverage Merchant Wholesalers	100	2,915	$5,153,337	51,552	643
4249	Miscellaneous Nondurable Goods Merchant Wholesalers	100	24,935	$3,194,974	177,451	2,901
4251	Wholesale Electronic Markets and Agents and Brokers	100	51,805	$2,671,669	198,899	7,798
4411	Automobile Dealers	20	32,728	$2,342,349	138,362	35,091
4412	Other Motor Vehicle Dealers	100	15,119	$3,211,634	135,960	40,926
4413	Automotive Parts, Accessories, and Tire Stores	100	33,491	$1,390,475	224,463	71,698
4421	Furniture Stores	100	20,814	$1,565,664	159,952	2,123
4422	Home Furnishings Stores	100	26,848	$1,498,171	146,864	12,980
4431	Electronics and Appliance Stores	20	29,639	$683,798	116,558	14,617
4441	Building Material and Supplies Dealers	100	45,150	$1,928,263	428,997	16,971
4442	Lawn and Garden Equipment and Supplies Stores	100	16,849	$1,700,097	130,105	13,416
4451	Grocery Stores	100	65,674	$1,085,339	515,110	797
4452	Specialty Food Stores	100	23,118	$1,021,657	129,811	579
4453	Beer, Wine, and Liquor Stores	100	26,694	$2,412,875	121,442	105
4461	Health and Personal Care Stores	100	43,486	$2,369,998	308,740	1,176
4471	Gasoline Stations	100	66,667	$2,630,686	456,927	16,798
4481	Clothing Stores	100	40,472	$1,001,691	210,551	130

Table V-2, contd.
Profile of General Industry Small Business Entities

NAICS	NAICS DESCRIPTION	SBA Employment Size Criterion [a]	Entities [b]	Average Receipts per Entity [c]	Total Employees	Estimated Employment in At-Risk Occupations [d]
4482	Shoe Stores	100	6,628	$1,231,651	42,233	7
4483	Jewelry, Luggage, and Leather Goods Stores	100	19,501	$1,703,784	86,712	888
4511	Sporting Goods, Hobby, and Musical Instrument Stores	100	31,727	$1,015,202	181,010	6,813
4512	Book, Periodical, and Music Stores	100	9,324	$751,979	52,895	48
4521	Department Stores	100	310	$2,145,052	1,913	14
4529	Other General Merchandise Stores	100	10,142	$652,509	54,739	898
4531	Florists	100	19,337	$715,722	93,332	173
4532	Office Supplies, Stationery, and Gift Stores	500	29,601	$579,606	175,305	5,498
4533	Used Merchandise Stores	100	12,837	$704,959	61,299	583
4539	Other Miscellaneous Store Retailers	100	36,894	$1,599,376	179,645	9,427
4541	Electronic Shopping and Mail-Order Houses	100	14,640	$1,662,070	95,814	770
4542	Vending Machine Operators	100	4,584	$857,851	26,351	8,493
4543	Direct Selling Establishments	20	19,468	$909,915	79,344	12,448
4811	Scheduled Air Transportation	1500	537	$153,586,642	421,206	35,030
4812	Nonscheduled Air Transportation	1500	2,342	$5,324,353	41,738	6,819
4831	Deep Sea, Coastal, and Great Lakes Water Transportation	500	826	$8,740,557	20,098	582
4832	Inland Water Transportation	500	563	$3,913,969	11,076	333
4841	General Freight Trucking	500	56,935	$1,173,314	459,626	21,818
4842	Specialized Freight Trucking	500	48,733	$1,058,496	376,396	20,594
4851	Urban Transit Systems	100	533	$500,073	7,184	774
4852	Interurban and Rural Bus Transportation	100	195	$748,442	2,459	152
4853	Taxi and Limousine Service	500	6,894	$641,423	55,722	1,405
4854	School and Employee Bus Transportation	100	2,788	$356,790	41,120	1,414
4855	Charter Bus Industry	500	1,087	$1,391,916	21,556	1,224
4859	Other Transit and Ground Passenger Transportation	500	2,974	$839,196	47,894	1,426
4861	Pipeline Transportation of Crude Oil	1500	55	$103,464,750	7,344	1,454

Table V-2, contd.
Profile of General Industry Small Business Entities

NAICS	NAICS DESCRIPTION	SBA Employment Size Criterion [a]	Entities [b]	Average Receipts per Entity [c]	Total Employees	Estimated Employment in At-Risk Occupations [d]
4862	Pipeline Transportation of Natural Gas	500	87	$31,024,724	1,834	375
4869	Other Pipeline Transportation	500	50	$10,746,871	868	163
4871	Scenic and Sightseeing Transportation, Land	500	609	$864,670	5,794	236
4872	Scenic and Sightseeing Transportation, Water	500	1,819	$577,460	9,605	242
4879	Scenic and Sightseeing Transportation, Other	100	172	$8,356,457	1,140	176
4881	Support Activities for Air Transportation	100	3,655	$1,197,858	30,965	8,713
4882	Support Activities for Rail Transportation	100	428	$1,564,525	5,779	1,954
4883	Support Activities for Water Transportation	100	1,680	$1,460,685	15,264	940
4884	Support Activities for Road Transportation	100	8,748	$723,521	52,911	2,890
4885	Freight Transportation Arrangement	100	12,524	$1,489,780	87,628	857
4889	Other Support Activities for Transportation	100	1,459	$709,514	9,583	292
4921	Couriers	1500	3,577	$17,649,286	512,361	12,650
4922	Local Messengers and Local Delivery	500	4,492	$624,776	34,611	113
4931	Warehousing and Storage	100	5,029	$1,249,091	57,146	1,797
5111	Newspaper, Periodical, Book, and Directory Publishers	500	16,475	$2,145,277	237,785	1,926
5112	Software Publishers	500	5,959	$3,589,364	113,676	761
5121	Motion Picture and Video Industries	500	16,854	$1,281,037	116,426	993
5122	Sound Recording Industries	100	3,271	$977,122	11,705	121
5151	Radio and Television Broadcasting	20	3,564	$548,141	22,395	245
5152	Cable and Other Subscription Programming	500	355	$7,411,465	7,089	1,899
5161	Internet Publishing and Broadcasting	500	2,310	$3,054,344	19,259	N/A
5171	Wired Telecommunications Carriers	1500	2,515	$87,147,431	618,739	208,804
5172	Wireless Telecommunications Carriers (except Satellite)	1500	2,516	$28,801,441	235,521	13,173
5173	Telecommunications Resellers	1500	2,278	$4,268,728	32,151	N/A
5174	Satellite Telecommunications	1000	434	$13,440,913	11,048	1,714
5175	Cable and Other Program Distribution	1000	1,141	$50,764,239	212,032	N/A

Table V-2, contd.
Profile of General Industry Small Business Entities

NAICS	NAICS DESCRIPTION	SBA Employment Size Criterion [a]	Entities [b]	Average Receipts per Entity [c]	Total Employees	Estimated Employment in At-Risk Occupations [d]
5179	Other Telecommunications	1000	439	$7,560,016	9,624	N/A
5181	Internet Service Providers and Web Search Portals	1000	4,907	$5,272,967	76,377	2,121
5182	Data Processing, Hosting, and Related Services	1000	7,545	$9,179,238	360,609	NA
5191	Other Information Services	1000	3,278	$1,825,276	52,575	4,755
5211	Monetary Authorities - Central Bank	1000	69	$391,956,231	18,284	214
5221	Depository Credit Intermediation	20	7,957	$1,426,482	56,849	391
5222	Nondepository Credit Intermediation	100	23,383	$1,295,717	137,424	107
5223	Activities Related to Credit Intermediation	20	26,458	$470,992	88,711	233
5231	Securities and Commodity Contracts Intermediation and Brokerage	100	12,818	$1,648,855	62,368	262
5232	Securities and Commodity Exchanges	100	121	$3,392,876	723	59
5239	Other Financial Investment Activities	100	40,791	$1,503,386	161,321	13
5241	Insurance Carriers	100	6,794	$3,526,365	51,354	416
5242	Agencies, Brokerages, and Other Insurance Related Activities	20	125,791	$412,500	400,858	145
5259	Other Investment Pools and Funds	20	1,957	$2,253,403	4,430	486
5311	Lessors of Real Estate	100	96,670	$1,538,159	366,476	55
5312	Offices of Real Estate Agents and Brokers	100	104,985	$1,365,819	269,224	97,615
5313	Activities Related to Real Estate	100	70,681	$694,879	347,638	17,990
5321	Automotive Equipment Rental and Leasing	500	4,637	$1,898,082	39,025	68,635
5322	Consumer Goods Rental	100	12,468	$681,190	85,463	5,149
5323	General Rental Centers	100	3,274	$1,060,723	22,587	2,591
5324	Commercial and Industrial Machinery and Equipment Rental and Leasing	100	8,257	$1,684,919	63,378	3,555
5331	Lessors of Nonfinancial Intangible Assets (except Copyrighted Works)	100	2,042	$2,502,187	14,545	16,365
5411	Legal Services	100	179,461	$838,109	827,785	156

Table V-2, contd.
Profile of General Industry Small Business Entities

NAICS	NAICS DESCRIPTION	SBA Employment Size Criterion [a]	Entities [b]	Average Receipts per Entity [c]	Total Employees	Estimated Employment in At-Risk Occupations [d]
5412	Accounting, Tax Preparation, Bookkeeping, and Payroll Services	500	106,052	$526,380	670,224	3,692
5413	Architectural, Engineering, and Related Services	100	98,506	$909,552	679,440	28,421
5414	Specialized Design Services	100	33,315	$1,016,776	114,397	1,863
5415	Computer Systems Design and Related Services	500	99,612	$1,094,463	667,253	11,119
5416	Management, Scientific, and Technical Consulting Services	100	135,799	$860,226	482,394	12,105
5417	Scientific Research and Development Services	100	12,136	$1,369,412	109,342	2,083
5418	Advertising and Related Services	500	35,826	$1,193,136	267,848	4,404
5419	Other Professional, Scientific, and Technical Services	500	64,641	$717,471	464,059	3,193
5511	Management of Companies and Enterprises	100	11,297	$1,297,120	83,770	2,353
5611	Office Administrative Services	100	23,645	$927,293	173,677	4,127
5612	Facilities Support Services	500	1,461	$2,654,253	40,843	5,349
5613	Employment Services	100	19,487	$710,473	317,504	22,495
5614	Business Support Services	100	28,919	$633,315	208,234	1,216
5615	Travel Arrangement and Reservation Services	100	17,100	$663,308	91,069	621
5616	Investigation and Security Services	100	18,290	$517,965	166,788	11,898
5617	Services to Buildings and Dwellings	100	167,989	$502,977	927,727	29,021
5619	Other Support Services	100	18,548	$1,027,259	128,098	7,637
5621	Waste Collection	500	7,107	$1,675,887	81,378	7,335
5622	Waste Treatment and Disposal	100	1,448	$1,497,636	13,380	2,352
5629	Remediation and Other Waste Management Services	100	7,317	$1,007,071	64,952	33,839
6111	Elementary and Secondary Schools	100	16,071	$811,723	421,759	4,919
6112	Junior Colleges	500	416	$3,944,210	32,113	548
6113	Colleges, Universities, and Professional Schools	100	1,153	$1,089,358	21,324	553
6114	Business Schools and Computer and Management Training	100	6,453	$831,992	37,674	266

Table V-2, contd.
Profile of General Industry Small Business Entities

NAICS	NAICS DESCRIPTION	SBA Employment Size Criterion [a]	Entities [b]	Average Receipts per Entity [c]	Total Employees	Estimated Employment in At-Risk Occupations [d]
6115	Technical and Trade Schools	500	6,540	$995,542	72,177	1,500
6116	Other Schools and Instruction	100	33,336	$391,277	223,347	1,165
6117	Educational Support Services	100	5,912	$800,171	33,513	83
6211	Offices of Physicians	100	188,192	$1,260,678	1,375,232	2,464
6212	Offices of Dentists	100	119,272	$2,366,865	777,326	391
6213	Offices of Other Health Practitioners	100	108,034	$831,272	464,068	494
6214	Outpatient Care Centers	500	13,215	$2,495,388	351,404	2,367
6215	Medical and Diagnostic Laboratories	500	7,614	$2,479,489	114,232	250
6216	Home Health Care Services	20	8,985	$363,853	41,669	51
6219	Other Ambulatory Health Care Services	100	5,283	$850,208	77,717	919
6221	General Medical and Surgical Hospitals	20	140	$5,508,604	384	5
6222	Psychiatric and Substance Abuse Hospitals	20	58	$795,944	224	5
6223	Specialty (except Psychiatric and Substance Abuse) Hospitals	20	135	$689,853	416	5
6231	Nursing Care Facilities	500	8,294	$4,563,312	775,960	10,302
6232	Residential Mental Retardation, Mental Health and Substance Abuse Facilities	100	5,926	$539,229	110,435	1,044
6233	Community Care Facilities for the Elderly	100	12,990	$468,789	191,515	4,138
6239	Other Residential Care Facilities	100	3,054	$519,419	51,122	726
6241	Individual and Family Services	100	36,613	$501,766	417,534	2,075
6242	Community Food and Housing, and Emergency and Other Relief Services	100	8,773	$908,040	103,564	2,641
6243	Vocational Rehabilitation Services	100	3,514	$708,258	61,128	678
6244	Child Day Care Services	100	58,234	$280,939	585,304	1,196
7111	Performing Arts Companies	500	9,019	$1,158,422	111,327	3,070
7112	Spectator Sports	100	4,153	$820,666	28,028	1,625

Table V-2, contd.
Profile of General Industry Small Business Entities

NAICS	NAICS DESCRIPTION	SBA Employment Size Criterion [a]	Entities [b]	Average Receipts per Entity [c]	Total Employees	Estimated Employment in At-Risk Occupations [d]
7113	Promoters of Performing Arts, Sports, and Similar Events	20	4,923	$735,781	16,006	636
7114	Agents and Managers for Artists, Athletes, Entertainers, and Other Public Figures	500	3,436	$1,071,924	14,606	68
7115	Independent Artists, Writers, and Performers	500	19,366	$565,122	43,514	910
7121	Museums, Historical Sites, and Similar Institutions	100	6,324	$820,340	68,077	2,505
7131	Amusement Parks and Arcades	100	2,271	$583,626	21,479	1,279
7132	Gambling Industries	500	1,967	$4,603,454	67,418	2,056
7139	Other Amusement and Recreation Industries	100	60,550	$461,606	604,187	24,157
7211	Traveler Accommodation	100	41,352	$627,347	483,604	22,062
7212	RV (Recreational Vehicle) Parks and Recreational Camps	100	6,534	$869,875	29,600	3,855
7213	Rooming and Boarding Houses	100	2,150	$862,100	9,850	489
7221	Full-Service Restaurants	500	184,085	$663,408	2,958,645	2,201
7222	Limited-Service Eating Places	100	166,087	$397,861	1,764,729	1,890
7223	Special Food Services	100	14,317	$446,029	123,885	1,248
7224	Drinking Places (Alcoholic Beverages)	100	45,317	$464,178	323,081	633
8111	Automotive Repair and Maintenance	100	150,385	$1,066,079	743,034	385,665
8112	Electronic and Precision Equipment Repair and Maintenance	20	10,849	$405,349	37,711	19,628
8113	Commercial and Industrial Machinery and Equipment (except Automotive and Electronic) Repair and Maintenance	100	22,686	$916,044	130,586	63,767
8114	Personal and Household Goods Repair and Maintenance	500	22,293	$323,780	76,369	28,811
8121	Personal Care Services	100	94,703	$329,434	470,019	280
8122	Death Care Services	20	14,892	$542,767	71,409	827

Table V-2, contd.
Profile of General Industry Small Business Entities

NAICS	NAICS DESCRIPTION	SBA Employment Size Criterion [a]	Entities [b]	Average Receipts per Entity [c]	Total Employees	Estimated Employment in At-Risk Occupations [d]
8123	Dry-cleaning and Laundry Services	20	32,044	$222,017	133,052	2,646
8129	Other Personal Services	20	24,454	$277,069	79,054	1,055
8131	Religious Organizations	20	156,829	$241,464	733,176	20,237
8132	Grantmaking and Giving Services	20	12,660	$1,753,057	46,534	215
8133	Social Advocacy Organizations	20	10,750	$491,583	47,106	594
8134	Civic and Social Organizations	20	25,609	$325,191	117,622	1,218
8139	Business, Professional, Labor, Political, and Similar Organizations	20	58,330	$493,062	242,744	10,542
	Totals		5,084,864		43,515,995	2,375,598

[a] SBA criteria specified in dollar terms converted to size-class definition based on average revenues for establishment size categories. The most restrictive criteria for 6-digit NAICS were applied to the 4-digit NAICS level.
[b] U.S. Census Bureau, *Statistics of U.S. Businesses,* 2006.
[c] Estimated based on 2002 receipts and payroll data from U.S. Census Bureau, *Statistics of U.S. Businesses*, 2002 and payroll data from U.S. Census Bureau, *Statistics of U.S. Businesses*, 2006. Receipts for 2006 were estimated assuming the ratio of receipts to payroll remained unchanged between 2002 and 2006.
[d] Assumes same share of production workers in construction, installation, maintenance, and repair occupations as shown in Table V-1.
N/A: Data not available.
Source: U.S. Dept. of Labor, OSHA, Directorate of Evaluation and Analysis, Office of Regulatory Analysis, based on ERG, 2007; SBA, 2006; U.S. Census Bureau, *Statistics of U.S. Businesses*, 2002, 2006; and Bureau of Labor Statistics, *Occupational Employment Statistics*, 2008.

Table V-3
Profile of General Industry Entities With Fewer Than 20 Employees

NAICS	NAICS DESCRIPTION	Entities [a]	Average Receipts per Entity [b]	Total Employees	Estimated Employment in At-Risk Occupations [c]
1131	Timber Tract Operations	372	$1,042,497	1,255	N/A
1132	Forest Nurseries and Gathering of Forest Products	149	$540,355	531	N/A
1133	Logging	9,426	$656,987	40,805	1,762
1141	Fishing	1,963	$419,493	2,504	NA
1142	Hunting and Trapping	331	$265,407	N/A	NA
1153	Support Activities for Forestry	1,462	$413,988	4,166	NA
2111	Oil and Gas Extraction	6,063	$2,073,096	20,661	4,214
2211	Electric Power Generation, Transmission and Distribution	627	$7,768,331	3,560	1,190
2212	Natural Gas Distribution	360	$9,483,461	1,736	522
2213	Water, Sewage and Other Systems	4,202	$483,840	15,972	3,512
3111	Animal Food Manufacturing	799	$2,511,440	5,084	363
3112	Grain and Oilseed Milling	249	$3,567,683	1,602	140
3113	Sugar and Confectionery Product Manufacturing	1,204	$700,303	6,987	598
3114	Fruit and Vegetable Preserving and Specialty Food Manufacturing	689	$1,644,885	4,131	375
3115	Dairy Product Manufacturing	601	$1,975,717	3,521	254
3116	Animal Slaughtering and Processing	2,223	$1,546,836	11,976	637
3117	Seafood Product Preparation and Packaging	344	$2,399,770	2,017	102
3118	Bakeries and Tortilla Manufacturing	7,422	$432,835	42,347	1,788
3119	Other Food Manufacturing	1,684	$1,605,131	9,717	573
3121	Beverage Manufacturing	2,330	$974,487	11,020	928
3122	Tobacco Manufacturing	51	$1,534,247	201	29
3131	Fiber, Yarn, and Thread Mills	182	$993,969	923	121

Table V-3, contd.
Profile of General Industry Entities With Fewer Than 20 Employees

NAICS	NAICS DESCRIPTION	Entities [a]	Average Receipts per Entity [b]	Total Employees	Estimated Employment in At-Risk Occupations [c]
3132	Fabric Mills	720	$912,031	4,098	391
3133	Textile and Fabric Finishing and Fabric Coating Mills	967	$1,301,062	5,133	242
3141	Textile Furnishings Mills	2,024	$857,756	9,018	484
3149	Other Textile Product Mills	3,275	$522,100	16,342	702
3151	Apparel Knitting Mills	289	$677,446	1,680	129
3152	Cut and Sew Apparel Manufacturing	7,536	$499,945	36,841	320
3159	Apparel Accessories and Other Apparel Manufacturing	725	$468,390	3,126	57
3161	Leather and Hide Tanning and Finishing	188	$658,199	895	41
3162	Footwear Manufacturing	202	$600,000	958	22
3169	Other Leather and Allied Product Manufacturing	673	$499,474	3,159	29
3211	Sawmills and Wood Preservation	2,620	$1,148,174	16,633	1,314
3212	Veneer, Plywood, and Engineered Wood Product Manufacturing	710	$1,211,573	5,492	559
3219	Other Wood Product Manufacturing	6,911	$790,961	40,323	5,008
3221	Pulp, Paper, and Paperboard Mills	86	$2,402,528	450	83
3222	Converted Paper Product Manufacturing	1,412	$1,789,932	10,270	645
3231	Printing and Related Support Activities	26,463	$538,272	135,078	2,164
3241	Petroleum and Coal Products Manufacturing	689	$3,145,204	3,662	533
3251	Basic Chemical Manufacturing	682	$3,214,155	3,545	427
3252	Resin, Synthetic Rubber, and Artificial Synthetic Fibers and Filaments Manufacturing	340	$2,346,595	2,137	271
3253	Pesticide, Fertilizer, and Other Agricultural Chemical Manufacturing	449	$2,362,918	2,632	326
3254	Pharmaceutical and Medicine Manufacturing	828	$2,018,489	4,579	207
3255	Paint, Coating, and Adhesive Manufacturing	989	$1,686,655	6,309	257
3256	Soap, Cleaning Compound, and Toilet Preparation Manufacturing	1,417	$2,139,182	8,230	555
3259	Other Chemical Product and Preparation Manufacturing	1,402	$1,512,793	8,118	522

Table V-3, contd.
Profile of General Industry Entities With Fewer Than 20 Employees

NAICS	NAICS DESCRIPTION	Entities [a]	Average Receipts per Entity [b]	Total Employees	Estimated Employment in At-Risk Occupations [c]
3261	Plastics Product Manufacturing	5,216	$1,196,576	35,886	1,990
3262	Rubber Product Manufacturing	968	$927,457	6,184	396
3271	Clay Product and Refractory Manufacturing	1,008	$475,655	4,455	352
3272	Glass and Glass Product Manufacturing	1,376	$572,692	6,260	589
3273	Cement and Concrete Product Manufacturing	3,214	$1,297,929	22,406	3,332
3274	Lime and Gypsum Product Manufacturing	163	$1,377,646	909	166
3279	Other Nonmetallic Mineral Product Manufacturing	2,074	$872,705	12,795	1,672
3311	Iron and Steel Mills and Ferroalloy Manufacturing	473	$2,384,007	2,170	445
3312	Steel Product Manufacturing from Purchased Steel	272	$1,302,285	1,430	127
3313	Alumina and Aluminum Production and Processing	209	$1,892,177	1,166	175
3314	Nonferrous Metal (except Aluminum) Production and Processing	431	$1,518,778	2,548	261
3315	Foundries	992	$838,695	6,829	566
3321	Forging and Stamping	1,265	$1,147,023	9,291	546
3322	Cutlery and Handtool Manufacturing	973	$776,879	5,673	220
3323	Architectural and Structural Metals Manufacturing	8,656	$904,217	54,551	5,140
3324	Boiler, Tank, and Shipping Container Manufacturing	638	$1,397,929	4,283	N/A
3325	Hardware Manufacturing	438	$1,009,933	2,714	96
3326	Spring and Wire Product Manufacturing	923	$921,330	6,139	213
3327	Machine Shops; Turned Product; and Screw, Nut, and Bolt Manufacturing	19,544	$608,300	111,422	2,743
3328	Coating, Engraving, Heat Treating, and Allied Activities	3,871	$636,257	26,269	1,079
3329	Other Fabricated Metal Product Manufacturing	3,893	$930,587	23,034	1,316
3331	Agriculture, Construction, and Mining Machinery Manufacturing	1,634	$1,393,622	10,459	572
3332	Industrial Machinery Manufacturing	2,414	$1,048,966	15,222	741
3333	Commercial and Service Industry Machinery Manufacturing	1,403	$1,035,382	7,991	409

Table V-3, contd.
Profile of General Industry Entities With Fewer Than 20 Employees

NAICS	NAICS DESCRIPTION	Entities [a]	Average Receipts per Entity [b]	Total Employees	Estimated Employment in At-Risk Occupations [c]
3334	Ventilation, Heating, Air-Conditioning, and Commercial Refrigeration Equipment Manufacturing	826	$1,240,826	5,171	445
3335	Metalworking Machinery Manufacturing	5,799	$708,301	37,199	965
3336	Engine, Turbine, and Power Transmission Equipment Manufacturing	407	$1,434,900	2,694	215
3339	Other General Purpose Machinery Manufacturing	3,516	$1,153,184	23,183	1,332
3341	Computer and Peripheral Equipment Manufacturing	841	$1,346,955	4,408	94
3342	Communications Equipment Manufacturing	973	$1,228,500	5,728	224
3343	Audio and Video Equipment Manufacturing	369	$1,139,851	1,922	57
3344	Semiconductor and Other Electronic Component Manufacturing	2,333	$1,918,228	14,985	437
3345	Navigational, Measuring, Electromedical, and Control Instruments Manufacturing	2,962	$1,084,021	16,635	510
3346	Manufacturing and Reproducing Magnetic and Optical Media	614	$917,675	2,847	122
3351	Electric Lighting Equipment Manufacturing	704	$1,083,508	4,179	208
3352	Household Appliance Manufacturing	189	$2,514,418	857	37
3353	Electrical Equipment Manufacturing	1,309	$1,222,154	7,897	363
3359	Other Electrical Equipment and Component Manufacturing	1,035	$1,380,209	6,537	298
3361	Motor Vehicle Manufacturing	181	$3,328,498	823	84
3362	Motor Vehicle Body and Trailer Manufacturing	1,042	$1,124,469	6,874	478
3363	Motor Vehicle Parts Manufacturing	2,540	$1,258,272	13,998	1,082
3364	Aerospace Product and Parts Manufacturing	730	$1,103,351	4,338	444
3365	Railroad Rolling Stock Manufacturing	75	$1,659,673	506	79
3366	Ship and Boat Building	1,152	$871,756	5,814	1,118
3369	Other Transportation Equipment Manufacturing	738	$844,592	3,399	203
3371	Household and Institutional Furniture and Kitchen Cabinet Manufacturing	13,501	$501,615	66,403	4,167
3372	Office Furniture (including Fixtures) Manufacturing	2,534	$790,967	16,255	820

Table V-3, contd.
Profile of General Industry Entities With Fewer Than 20 Employees

NAICS	NAICS DESCRIPTION	Entities [a]	Average Receipts per Entity [b]	Total Employees	Estimated Employment in At-Risk Occupations [c]
3379	Other Furniture Related Product Manufacturing	592	$864,897	3,459	112
3391	Medical Equipment and Supplies Manufacturing	9,659	$482,439	41,316	930
3399	Other Miscellaneous Manufacturing	14,922	$657,802	75,085	3,535
4231	Motor Vehicle and Motor Vehicle Parts and Supplies Merchant Wholesalers	14,546	$2,323,453	68,215	9,839
4232	Furniture and Home Furnishing Merchant Wholesalers	9,117	$2,539,117	41,348	1,080
4233	Lumber and Other Construction Materials Merchant Wholesalers	10,007	$3,169,719	50,454	2,660
4234	Professional and Commercial Equipment and Supplies Merchant Wholesalers	22,418	$1,832,558	102,037	10,496
4235	Metal and Mineral (except Petroleum) Merchant Wholesalers	5,765	$5,153,468	30,447	826
4236	Electrical and Electronic Goods Merchant Wholesalers	16,322	$3,446,632	79,418	5,824
4237	Hardware, and Plumbing and Heating Equipment and Supplies Merchant Wholesalers	8,931	$2,612,048	48,507	3,631
4238	Machinery, Equipment, and Supplies Merchant Wholesalers	35,906	$2,209,959	185,702	37,353
4239	Miscellaneous Durable Goods Merchant Wholesalers	27,590	$2,160,892	108,180	5,692
4241	Paper and Paper Product Merchant Wholesalers	7,732	$2,316,826	35,987	470
4242	Drugs and Druggists' Sundries Merchant Wholesalers	5,112	$2,864,916	21,660	155
4243	Apparel, Piece Goods, and Notions Merchant Wholesalers	12,590	$2,307,551	50,086	178
4244	Grocery and Related Product Wholesalers	22,264	$3,687,332	101,010	2,336
4245	Farm Product Raw Material Merchant Wholesalers	3,217	$7,387,810	17,400	369
4246	Chemical and Allied Products Merchant Wholesalers	7,069	$2,927,863	32,389	1,324
4247	Petroleum and Petroleum Products Merchant Wholesalers	3,505	$8,414,357	19,358	1,208
4248	Beer, Wine, and Distilled Alcoholic Beverage Merchant Wholesalers	2,010	$2,692,914	10,307	129
4249	Miscellaneous Nondurable Goods Merchant Wholesalers	22,457	$1,851,390	90,728	1,483
4251	Wholesale Electronic Markets and Agents and Brokers	50,014	$2,087,205	138,964	5,448
4411	Automobile Dealers	32,728	$2,342,349	138,362	35,091

Table V-3, contd.
Profile of General Industry Entities With Fewer Than 20 Employees

NAICS	NAICS DESCRIPTION	Entities [a]	Average Receipts per Entity [b]	Total Employees	Estimated Employment in At-Risk Occupations [c]
4412	Other Motor Vehicle Dealers	13,140	$1,811,908	66,353	19,973
4413	Automotive Parts, Accessories, and Tire Stores	31,293	$725,592	153,946	49,174
4421	Furniture Stores	18,894	$874,249	93,466	1,240
4422	Home Furnishings Stores	25,517	$736,311	105,000	9,280
4431	Electronics and Appliance Stores	29,639	$683,798	116,558	14,617
4441	Building Material and Supplies Dealers	39,068	$1,110,284	218,625	8,649
4442	Lawn and Garden Equipment and Supplies Stores	15,134	$951,435	75,541	7,790
4451	Grocery Stores	58,462	$705,988	230,995	358
4452	Specialty Food Stores	21,668	$534,194	85,519	382
4453	Beer, Wine, and Liquor Stores	25,919	$834,237	98,420	85
4461	Health and Personal Care Stores	40,170	$1,224,825	199,735	761
4471	Gasoline Stations	62,033	$1,367,209	307,125	11,291
4481	Clothing Stores	38,587	$472,506	148,488	92
4482	Shoe Stores	6,189	$587,087	27,263	4
4483	Jewelry, Luggage, and Leather Goods Stores	18,976	$634,747	68,933	706
4511	Sporting Goods, Hobby, and Musical Instrument Stores	29,986	$527,845	123,468	4,647
4512	Book, Periodical, and Music Stores	8,788	$405,848	34,452	31
4521	Department Stores	285	$2,028,973	1,038	8
4529	Other General Merchandise Stores	9,608	$465,676	36,049	592
4531	Florists	18,784	$267,511	76,408	142
4532	Office Supplies, Stationery, and Gift Stores	27,832	$374,565	105,910	3,321
4533	Used Merchandise Stores	12,195	$364,560	41,115	391
4539	Other Miscellaneous Store Retailers	35,275	$708,846	130,427	6,844
4541	Electronic Shopping and Mail-Order Houses	13,418	$1,024,129	51,279	412
4542	Vending Machine Operators	4,261	$488,307	14,444	4,655

Table V-3, contd.
Profile of General Industry Entities With Fewer Than 20 Employees

NAICS	NAICS DESCRIPTION	Entities [a]	Average Receipts per Entity [b]	Total Employees	Estimated Employment in At-Risk Occupations [c]
4543	Direct Selling Establishments	19,468	$909,915	79,344	12,448
4811	Scheduled Air Transportation	341	$1,915,351	1,371	114
4812	Nonscheduled Air Transportation	1,945	$980,514	6,777	1,107
4831	Deep Sea, Coastal, and Great Lakes Water Transportation	627	$1,913,053	2,929	85
4832	Inland Water Transportation	445	$1,060,115	1,896	57
4841	General Freight Trucking	51,793	$492,740	157,198	7,462
4842	Specialized Freight Trucking	44,397	$514,923	159,820	8,744
4851	Urban Transit Systems	410	$318,546	1,968	212
4852	Interurban and Rural Bus Transportation	158	$474,151	671	42
4853	Taxi and Limousine Service	6,242	$316,462	22,269	562
4854	School and Employee Bus Transportation	2,065	$222,943	11,030	379
4855	Charter Bus Industry	749	$480,027	4,314	245
4859	Other Transit and Ground Passenger Transportation	2,321	$300,662	11,173	333
4861	Pipeline Transportation of Crude Oil	23	$7,841,011	0	N/A
4862	Pipeline Transportation of Natural Gas	65	$8,473,335	238	49
4869	Other Pipeline Transportation	38	$973,115	0	N/A
4871	Scenic and Sightseeing Transportation, Land	520	$511,438	0	N/A
4872	Scenic and Sightseeing Transportation, Water	1,701	$348,304	4,190	106
4879	Scenic and Sightseeing Transportation, Other	154	$1,097,495	0	N/A
4881	Support Activities for Air Transportation	3,193	$681,456	14,170	3,987
4882	Support Activities for Rail Transportation	330	$1,092,860	1,978	669
4883	Support Activities for Water Transportation	1,423	$734,759	5,365	331
4884	Support Activities for Road Transportation	8,160	$383,444	34,377	1,878
4885	Freight Transportation Arrangement	11,478	$929,721	48,823	477
4889	Other Support Activities for Transportation	1,335	$450,632	4,797	146

Table V-3, contd.
Profile of General Industry Entities With Fewer Than 20 Employees

NAICS	NAICS DESCRIPTION	Entities [a]	Average Receipts per Entity [b]	Total Employees	Estimated Employment in At-Risk Occupations [c]
4921	Couriers	3,123	$478,633	10,620	262
4922	Local Messengers and Local Delivery	4,097	$370,274	14,181	46
4931	Warehousing and Storage	3,739	$817,283	18,898	594
5111	Newspaper, Periodical, Book, and Directory Publishers	13,904	$594,111	62,961	510
5112	Software Publishers	4,545	$878,688	22,467	150
5121	Motion Picture and Video Industries	15,602	$691,722	42,925	366
5122	Sound Recording Industries	3,172	$483,788	8,204	85
5151	Radio and Television Broadcasting	3,564	$548,141	22,395	245
5152	Cable and Other Subscription Programming	298	$1,143,210	1,320	354
5161	Internet Publishing and Broadcasting	2,086	$1,119,239	6,706	NA
5171	Wired Telecommunications Carriers	1,828	$1,459,785	9,022	3,045
5172	Wireless Telecommunications Carriers (except Satellite)	2,209	$838,384	8,015	448
5173	Telecommunications Resellers	1,956	$1,049,862	7,526	N/A
5174	Satellite Telecommunications	349	$1,414,733	1,331	207
5175	Cable and Other Program Distribution	938	$960,466	4,065	NA
5179	Other Telecommunications	375	$1,073,822	1,329	293
5181	Internet Service Providers and Web Search Portals	4,407	$583,023	15,408	N/A
5182	Data Processing, Hosting, and Related Services	5,747	$665,882	24,238	320
5191	Other Information Services	2,858	$341,896	12,344	50
5211	Monetary Authorities - Central Bank	41	$4,209,924	241	5
5221	Depository Credit Intermediation	7,957	$1,426,482	56,849	107
5222	Nondepository Credit Intermediation	21,695	$687,001	73,491	125
5223	Activities Related to Credit Intermediation	26,458	$470,992	88,711	262
5231	Securities and Commodity Contracts Intermediation and Brokerage	12,099	$1,005,409	35,731	34
5232	Securities and Commodity Exchanges	110	$1,737,742	242	4

Table V-3, contd.
Profile of General Industry Entities With Fewer Than 20 Employees

NAICS	NAICS DESCRIPTION	Entities [a]	Average Receipts per Entity [b]	Total Employees	Estimated Employment in At-Risk Occupations [c]
5239	Other Financial Investment Activities	39,095	$790,122	105,034	271
5241	Insurance Carriers	6,133	$1,513,149	22,932	65
5242	Agencies, Brokerages, and Other Insurance Related Activities	125,791	$412,500	400,858	486
5259	Other Investment Pools and Funds	1,957	$2,253,403	4,430	55
5311	Lessors of Real Estate	93,546	$688,364	264,797	70,532
5312	Offices of Real Estate Agents and Brokers	103,231	$562,942	208,386	13,924
5313	Activities Related to Real Estate	66,691	$410,803	197,767	39,046
5321	Automotive Equipment Rental and Leasing	4,120	$799,082	13,989	1,846
5322	Consumer Goods Rental	11,393	$357,361	49,302	1,495
5323	General Rental Centers	2,984	$561,152	14,810	2,331
5324	Commercial and Industrial Machinery and Equipment Rental and Leasing	7,333	$933,862	30,397	7,849
5331	Lessors of Nonfinancial Intangible Assets (except Copyrighted Works)	1,829	$1,448,873	6,605	71
5411	Legal Services	172,259	$477,566	558,419	267
5412	Accounting, Tax Preparation, Bookkeeping, and Payroll Services	100,204	$295,688	339,731	1,871
5413	Architectural, Engineering, and Related Services	89,960	$524,593	351,966	14,723
5414	Specialized Design Services	32,491	$471,675	86,977	1,417
5415	Computer Systems Design and Related Services	92,442	$433,571	247,165	4,119
5416	Management, Scientific, and Technical Consulting Services	130,867	$430,968	300,198	7,533
5417	Scientific Research and Development Services	10,458	$897,588	41,730	795
5418	Advertising and Related Services	32,970	$640,602	115,450	1,898
5419	Other Professional, Scientific, and Technical Services	59,744	$473,846	252,870	1,740
5511	Management of Companies and Enterprises	5,747	$1,953,117	14,705	413
5611	Office Administrative Services	20,907	$579,648	73,227	1,740
5612	Facilities Support Services	964	$605,093	4,231	554

Table V-3, contd.
Profile of General Industry Entities With Fewer Than 20 Employees

NAICS	NAICS DESCRIPTION	Entities [a]	Average Receipts per Entity [b]	Total Employees	Estimated Employment in At-Risk Occupations [c]
5613	Employment Services	14,182	$424,208	60,235	4,268
5614	Business Support Services	26,155	$411,143	101,459	592
5615	Travel Arrangement and Reservation Services	16,178	$337,452	55,506	378
5616	Investigation and Security Services	15,858	$341,475	65,877	4,699
5617	Services to Buildings and Dwellings	157,597	$280,997	536,381	16,779
5619	Other Support Services	16,890	$644,887	65,046	3,878
5621	Waste Collection	6,066	$685,531	30,704	2,768
5622	Waste Treatment and Disposal	1,254	$939,758	6,657	1,170
5629	Remediation and Other Waste Management Services	6,382	$612,001	29,656	15,450
6111	Elementary and Secondary Schools	7,948	$403,654	61,666	719
6112	Junior Colleges	190	$482,860	969	17
6113	Colleges, Universities, and Professional Schools	798	$647,987	3,984	103
6114	Business Schools and Computer and Management Training	5,953	$467,803	18,916	133
6115	Technical and Trade Schools	5,624	$442,268	27,704	576
6116	Other Schools and Instruction	30,637	$232,484	128,585	671
6117	Educational Support Services	5,479	$417,247	17,307	43
6211	Offices of Physicians	172,296	$691,072	801,708	1,437
6212	Offices of Dentists	115,748	$636,477	674,036	339
6213	Offices of Other Health Practitioners	104,920	$324,507	357,896	381
6214	Outpatient Care Centers	8,987	$671,759	47,422	319
6215	Medical and Diagnostic Laboratories	6,215	$944,552	28,007	61
6216	Home Health Care Services	8,985	$363,853	41,669	51
6219	Other Ambulatory Health Care Services	3,890	$565,007	21,749	257
6221	General Medical and Surgical Hospitals	140	$5,508,604	384	5
6222	Psychiatric and Substance Abuse Hospitals	58	$795,944	224	5

Table V-3, contd.
Profile of General Industry Entities With Fewer Than 20 Employees

NAICS	NAICS DESCRIPTION	Entities [a]	Average Receipts per Entity [b]	Total Employees	Estimated Employment in At-Risk Occupations [c]
6223	Specialty (except Psychiatric and Substance Abuse) Hospitals	135	$689,853	416	5
6231	Nursing Care Facilities	2,032	$627,712	9,247	123
6232	Residential Mental Retardation, Mental Health and Substance Abuse Facilities	3,904	$320,106	24,050	227
6233	Community Care Facilities for the Elderly	9,635	$288,026	51,045	1,103
6239	Other Residential Care Facilities	2,080	$335,674	13,533	192
6241	Individual and Family Services	29,805	$317,820	140,999	701
6242	Community Food and Housing, and Emergency and Other Relief Services	6,970	$527,136	39,879	1,017
6243	Vocational Rehabilitation Services	2,407	$393,289	12,180	135
6244	Child Day Care Services	49,004	$170,304	280,532	573
7111	Performing Arts Companies	7,944	$532,181	27,513	759
7112	Spectator Sports	3,761	$579,847	12,529	726
7113	Promoters of Performing Arts, Sports, and Similar Events	4,923	$735,781	16,006	636
7114	Agents and Managers for Artists, Athletes, Entertainers, and Other Public Figures	3,318	$709,692	8,377	39
7115	Independent Artists, Writers, and Performers	19,062	$526,157	30,134	630
7121	Museums, Historical Sites, and Similar Institutions	5,519	$366,794	22,954	845
7131	Amusement Parks and Arcades	1,921	$385,510	8,203	489
7132	Gambling Industries	1,421	$721,012	8,273	252
7139	Other Amusement and Recreation Industries	51,143	$324,600	228,183	9,123
7211	Traveler Accommodation	33,190	$444,833	184,989	8,439
7212	RV (Recreational Vehicle) Parks and Recreational Camps	6,059	$423,680	18,390	2,395
7213	Rooming and Boarding Houses	2,077	$270,597	7,849	390
7221	Full-Service Restaurants	138,277	$314,523	847,722	631
7222	Limited-Service Eating Places	138,820	$266,342	756,485	810

Table V-3, contd.
Profile of General Industry Entities With Fewer Than 20 Employees

NAICS	NAICS DESCRIPTION	Entities [a]	Average Receipts per Entity [b]	Total Employees	Estimated Employment in At-Risk Occupations [c]
7223	Special Food Services	12,449	$304,973	51,898	523
7224	Drinking Places (Alcoholic Beverages)	41,469	$253,492	187,874	368
8111	Automotive Repair and Maintenance	144,622	$404,700	559,219	290,258
8112	Electronic and Precision Equipment Repair and Maintenance	10,849	$405,349	37,711	19,628
8113	Commercial and Industrial Machinery and Equipment (except Automotive and Electronic) Repair and Maintenance	21,337	$505,809	85,313	41,660
8114	Personal and Household Goods Repair and Maintenance	21,812	$265,334	60,999	23,013
8121	Personal Care Services	90,681	$155,065	332,784	199
8122	Death Care Services	14,892	$542,767	71,409	827
8123	Dry-cleaning and Laundry Services	32,044	$222,017	133,052	2,646
8129	Other Personal Services	24,454	$277,069	79,054	1,055
8131	Religious Organizations	156,829	$241,464	733,176	20,237
8132	Grantmaking and Giving Services	12,660	$1,753,057	46,534	215
8133	Social Advocacy Organizations	10,750	$491,583	47,106	594
8134	Civic and Social Organizations	25,609	$325,191	117,622	1,218
8139	Business, Professional, Labor, Political, and Similar Organizations	58,330	$493,062	242,744	10,542
	Totals	4,616,620		18,802,762	1,065,239

[a] U.S. Census Bureau, *Statistics of U.S. Businesses*, 2006.

[b] Estimated based on 2002 receipts and payroll data from U.S. Census Bureau, *Statistics of U.S. Businesses*, 2002 and payroll data from U.S. Census Bureau, *Statistics of U.S. Businesses*, 2006. Receipts are not reported for 2006, but were estimated assuming the ratio of receipts to payroll remained unchanged between 2002 and 2006.

[c] Assumes same share of production workers in construction, installation, maintenance, and repair occupations as shown in Table V-1.

N/A: Data not available.

Table V-3, contd.
Profile of General Industry Entities With Fewer Than 20 Employees

NAICS	NAICS DESCRIPTION	Entities [a]	Average Receipts per Entity [b]	Total Employees	Estimated Employment in At-Risk Occupations [c]

Source: U.S. Dept. of Labor, OSHA, Directorate of Evaluation and Analysis, Office of Regulatory Analysis, based on ERG, 2007; U.S. Census Bureau, *Statistics of U.S. Businesses*, 2002, 2006; Bureau of Labor Statistics, *Occupational Employment Statistics*, 2008.

BILLING CODE 4510–29–C

Employees Using Fall Protection

Based on analysis by ERG (ERG, 2007, Ex. 6), OSHA estimated the numbers of employees using fall protection equipment by extrapolating results obtained from OSHA's 1999 PPE Cost Survey. This establishment-based survey provided industry-specific estimates of the numbers of workers who used various types of personal protective equipment, including body harnesses and body belts.[15] The survey reported the percent of employees in each industry (SIC classification) that used these equipment types. ERG extrapolated the survey findings by first associating the SIC industries covered by the survey with 4-digit NAICS industries and then multiplying the equipment use percentages by total employment (presented above in Table V–1).

Because the same employees might use both body harnesses and body belts, OSHA used the maximum value of the two percentages in deriving these estimates. For example, if for a given industry, six percent of employees were estimated using body harnesses while four percent were estimated to use body belts, OSHA used the larger statistic (six percent) as its estimate of the share of employees using fall protection. Also, the survey's design did not permit industry-specific estimates for all industries. For example, only aggregated estimates are available for several groups of service, wholesale, and retail trade industries. To make the fall protection estimates consistent with the numbers of at-risk employees, OSHA constrained the estimated number of employees using fall protection in any industry to be less than or equal to the numbers of employees in construction, installation, maintenance, and repair occupations shown in Table V–1. Table V–4 presents, by 4-digit NAICS industry, OSHA's estimate of the number of employees using fall protection equipment. Overall, an estimated 1.6 million employees in general industry use fall protection.

Wage Rates

As will be discussed in detail later in this PEA, OSHA anticipates that much of the cost impact of the proposed standard is associated with the time requirements for additional training and inspections. Estimates for these costs depend on the opportunity cost of the labor hours that would otherwise be devoted to productive activities. Such opportunity costs are typically valued in terms of employees' hourly wages, adjusted for benefit and fringe costs. ERG relied on average hourly earnings as reported by the BLS Occupational Employment Statistics Survey and constructed a weighted average hourly wage for the specific occupations comprising production employment. ERG similarly constructed an average hourly production supervisor wage for each industry. These wages were then inflated by a factor to account for fringe benefits. According to a recent BLS survey, this mark-up factor averaged 43.5 percent.[16] The loaded wage rates applied by OSHA in this preliminary economic analysis are shown in Table V–5.

BILLING CODE 4510–29–P

[15] For a description of the survey, see Eastern Research Group, *PPE Cost Survey: Final Report.* Task Order 3, Base Year, DOL Contract No. J–9–F–9–0010. June 23, 1999 (Exhibit 14, OSHA Docket S–042: Costs of Personal Protective Equipment). Back support belts and similar ergonomic devices were explicitly excluded from the types of personal protective equipment investigated by the survey.

[16] BLS, *Employer Costs for Employee Compensation—June 2008.* Accessed September 10, 2008.

Table V-4
Estimated Number of Employees Using Fall Protection Equipment

NAICS	NAICS DESCRIPTION	Total Employment	Employees Using Fall Protection [a]		
			Percent	Number [c]	
1131	Timber Tract Operations	2,806	6.9%	N/A	
1132	Forest Nurseries and Gathering of Forest Products	2,098	9.7%	N/A	
1133	Logging	61,400	1.8%	1,075	
1141	Fishing	5,646	N/A	N/A	
1142	Hunting and Trapping	1,875	N/A	N/A	
1153	Support Activities for Forestry	13,491	9.7%	N/A	
2111	Oil and Gas Extraction	92,683	22.9%	18,902	[b]
2211	Electric Power Generation, Transmission and Distribution	493,670	10.4%	51,379	
2212	Natural Gas Distribution	78,813	10.4%	8,203	
2213	Water, Sewage and Other Systems	41,944	10.4%	4,365	
3111	Animal Food Manufacturing	48,173	1.9%	928	
3112	Grain and Oilseed Milling	53,724	1.9%	1,035	
3113	Sugar and Confectionery Product Manufacturing	72,604	1.9%	1,399	
3114	Fruit and Vegetable Preserving and Specialty Food Manufacturing	164,330	1.9%	3,166	
3115	Dairy Product Manufacturing	130,253	1.9%	2,510	
3116	Animal Slaughtering and Processing	503,800	1.9%	9,707	
3117	Seafood Product Preparation and Packaging	35,894	1.9%	692	
3118	Bakeries and Tortilla Manufacturing	288,393	1.9%	5,557	
3119	Other Food Manufacturing	161,567	1.9%	3,113	
3121	Beverage Manufacturing	134,206	1.9%	2,586	
3122	Tobacco Manufacturing	20,887	2.7%	560	
3131	Fiber, Yarn, and Thread Mills	48,240	1.8%	887	
3132	Fabric Mills	91,959	1.8%	1,690	
3133	Textile and Fabric Finishing and Fabric Coating Mills	47,567	1.8%	874	
3141	Textile Furnishings Mills	81,060	1.8%	1,490	
3149	Other Textile Product Mills	74,526	1.8%	1,370	
3151	Apparel Knitting Mills	30,784	1.6%	479	
3152	Cut and Sew Apparel Manufacturing	168,283	1.6%	1,463	[b]
3159	Apparel Accessories and Other Apparel Manufacturing	17,171	1.6%	267	
3161	Leather and Hide Tanning and Finishing	5,807	1.6%	95	
3162	Footwear Manufacturing	16,616	1.6%	271	
3169	Other Leather and Allied Product Manufacturing	16,174	1.6%	148	[b]

Table V-4, contd.
Estimated Number of Employees Using Fall Protection Equipment

NAICS	NAICS DESCRIPTION	Total Employment	Employees Using Fall Protection [a]		
			Percent	Number [c]	
3211	Sawmills and Wood Preservation	118,483	1.8%	2,074	
3212	Veneer, Plywood, and Engineered Wood Product Manufacturing	124,472	1.8%	2,179	
3219	Other Wood Product Manufacturing	333,551	1.8%	5,838	
3221	Pulp, Paper, and Paperboard Mills	138,756	6.1%	8,454	
3222	Converted Paper Product Manufacturing	302,674	6.1%	18,440	
3231	Printing and Related Support Activities	641,011	1.8%	10,268	[b]
3241	Petroleum and Coal Products Manufacturing	102,997	16.4%	14,987	[b]
3251	Basic Chemical Manufacturing	161,324	16.8%	19,450	[b]
3252	Resin, Synthetic Rubber, and Artificial Synthetic Fibers and Filaments Manufacturing	86,294	16.8%	10,932	[b]
3253	Pesticide, Fertilizer, and Other Agricultural Chemical Manufacturing	29,748	16.8%	3,685	[b]
3254	Pharmaceutical and Medicine Manufacturing	249,743	16.8%	11,310	[b]
3255	Paint, Coating, and Adhesive Manufacturing	67,337	16.8%	2,741	[b]
3256	Soap, Cleaning Compound, and Toilet Preparation Manufacturing	105,506	16.8%	7,114	[b]
3259	Other Chemical Product and Preparation Manufacturing	105,112	16.8%	6,762	[b]
3261	Plastics Product Manufacturing	740,254	1.5%	11,129	
3262	Rubber Product Manufacturing	160,588	1.5%	2,414	
3271	Clay Product and Refractory Manufacturing	53,521	6.5%	3,501	
3272	Glass and Glass Product Manufacturing	102,364	6.5%	6,696	
3273	Cement and Concrete Product Manufacturing	227,739	6.5%	14,898	
3274	Lime and Gypsum Product Manufacturing	17,935	6.5%	1,173	
3279	Other Nonmetallic Mineral Product Manufacturing	80,900	6.5%	5,292	
3311	Iron and Steel Mills and Ferroalloy Manufacturing	110,790	7.2%	7,971	
3312	Steel Product Manufacturing from Purchased Steel	47,069	7.2%	3,387	
3313	Alumina and Aluminum Production and Processing	65,387	7.2%	4,705	
3314	Nonferrous Metal (except Aluminum) Production and Processing	59,610	7.2%	4,289	
3315	Foundries	167,058	2.4%	4,029	
3321	Forging and Stamping	130,140	2.4%	3,138	
3322	Cutlery and Handtool Manufacturing	53,633	2.4%	1,293	
3323	Architectural and Structural Metals Manufacturing	396,098	2.4%	9,552	
3324	Boiler, Tank, and Shipping Container Manufacturing	87,497	2.4%	2,110	
3325	Hardware Manufacturing	45,282	2.4%	1,092	
3326	Spring and Wire Product Manufacturing	55,759	2.4%	1,345	
3327	Machine Shops; Turned Product; and Screw, Nut, and Bolt Manufacturing	386,792	2.4%	9,327	

Table V-4, contd.
Estimated Number of Employees Using Fall Protection Equipment

NAICS	NAICS DESCRIPTION	Total Employment	Employees Using Fall Protection [a]		
			Percent	Number [c]	
3328	Coating, Engraving, Heat Treating, and Allied Activities	136,411	2.4%	3,290	
3329	Other Fabricated Metal Product Manufacturing	272,101	2.4%	6,562	
3331	Agriculture, Construction, and Mining Machinery Manufacturing	194,899	2.7%	5,211	
3332	Industrial Machinery Manufacturing	131,927	2.7%	3,527	
3333	Commercial and Service Industry Machinery Manufacturing	95,489	2.7%	2,553	
3334	Ventilation, Heating, Air-Conditioning, and Commercial Refrigeration Equipment Manufacturing	150,277	2.7%	4,018	
3335	Metalworking Machinery Manufacturing	173,681	2.7%	4,507	[b]
3336	Engine, Turbine, and Power Transmission Equipment Manufacturing	99,827	2.7%	2,669	
3339	Other General Purpose Machinery Manufacturing	280,571	2.7%	7,502	
3341	Computer and Peripheral Equipment Manufacturing	102,607	2.4%	2,180	[b]
3342	Communications Equipment Manufacturing	152,679	2.4%	3,668	
3343	Audio and Video Equipment Manufacturing	18,939	2.4%	455	
3344	Semiconductor and Other Electronic Component Manufacturing	365,417	2.4%	8,778	
3345	Navigational, Measuring, Electromedical, and Control Instruments Manufacturing	384,856	2.4%	9,245	
3346	Manufacturing and Reproducing Magnetic and Optical Media	32,987	2.4%	792	
3351	Electric Lighting Equipment Manufacturing	56,797	2.4%	1,364	
3352	Household Appliance Manufacturing	74,585	2.4%	1,792	
3353	Electrical Equipment Manufacturing	138,511	2.4%	3,327	
3359	Other Electrical Equipment and Component Manufacturing	149,798	2.4%	3,599	
3361	Motor Vehicle Manufacturing	211,162	2.5%	5,316	
3362	Motor Vehicle Body and Trailer Manufacturing	155,649	2.5%	3,918	
3363	Motor Vehicle Parts Manufacturing	641,128	2.5%	16,141	
3364	Aerospace Product and Parts Manufacturing	397,933	2.5%	10,018	
3365	Railroad Rolling Stock Manufacturing	29,675	2.5%	747	
3366	Ship and Boat Building	142,057	36.2%	27,309	[b]
3369	Other Transportation Equipment Manufacturing	44,923	2.5%	1,131	
3371	Household and Institutional Furniture and Kitchen Cabinet Manufacturing	354,341	1.7%	6,046	
3372	Office Furniture (including Fixtures) Manufacturing	143,102	1.7%	2,442	
3379	Other Furniture Related Product Manufacturing	45,816	1.7%	782	
3391	Medical Equipment and Supplies Manufacturing	314,015	2.5%	7,070	[b]

Table V-4, contd.
Estimated Number of Employees Using Fall Protection Equipment

NAICS	NAICS DESCRIPTION	Total Employment	Employees Using Fall Protection [a]		
			Percent	Number [c]	
3399	Other Miscellaneous Manufacturing	372,081	2.8%	10,497	
4231	Motor Vehicle and Motor Vehicle Parts and Supplies Merchant Wholesalers	367,505	4.5%	16,432	
4232	Furniture and Home Furnishing Merchant Wholesalers	158,027	4.5%	4,127	[b]
4233	Lumber and Other Construction Materials Merchant Wholesalers	274,745	4.5%	12,284	
4234	Professional and Commercial Equipment and Supplies Merchant Wholesalers	723,687	4.5%	32,357	
4235	Metal and Mineral (except Petroleum) Merchant Wholesalers	158,317	4.5%	4,297	[b]
4236	Electrical and Electronic Goods Merchant Wholesalers	466,457	4.5%	20,856	
4237	Hardware, and Plumbing and Heating Equipment and Supplies Merchant Wholesalers	231,219	4.5%	10,338	
4238	Machinery, Equipment, and Supplies Merchant Wholesalers	714,037	4.5%	31,925	
4239	Miscellaneous Durable Goods Merchant Wholesalers	336,259	4.5%	15,035	
4241	Paper and Paper Product Merchant Wholesalers	179,820	4.1%	2,349	[b]
4242	Drugs and Druggists' Sundries Merchant Wholesalers	257,590	4.1%	1,844	[b]
4243	Apparel, Piece Goods, and Notions Merchant Wholesalers	200,985	4.1%	714	[b]
4244	Grocery and Related Product Wholesalers	770,899	4.1%	17,827	[b]
4245	Farm Product Raw Material Merchant Wholesalers	62,173	4.1%	1,317	[b]
4246	Chemical and Allied Products Merchant Wholesalers	141,225	4.1%	5,772	[b]
4247	Petroleum and Petroleum Products Merchant Wholesalers	102,753	4.1%	4,249	
4248	Beer, Wine, and Distilled Alcoholic Beverage Merchant Wholesalers	178,869	4.1%	2,233	[b]
4249	Miscellaneous Nondurable Goods Merchant Wholesalers	373,421	4.1%	6,106	[b]
4251	Wholesale Electronic Markets and Agents and Brokers	332,659	4.1%	13,042	[b]
4411	Automobile Dealers	1,286,788	2.4%	30,940	
4412	Other Motor Vehicle Dealers	167,374	2.4%	4,024	
4413	Automotive Parts, Accessories, and Tire Stores	493,354	2.4%	11,862	
4421	Furniture Stores	282,668	2.4%	3,751	[b]
4422	Home Furnishings Stores	295,407	2.4%	7,069	
4431	Electronics and Appliance Stores	488,784	2.4%	11,696	
4441	Building Material and Supplies Dealers	1,190,989	2.0%	23,479	
4442	Lawn and Garden Equipment and Supplies Stores	175,415	2.0%	3,458	

Table V-4, contd.
Estimated Number of Employees Using Fall Protection Equipment

NAICS	NAICS DESCRIPTION	Total Employment	Employees Using Fall Protection [a]		
			Percent	Number [c]	
4451	Grocery Stores	2,615,175	2.1%	4,048	[b]
4452	Specialty Food Stores	168,728	2.1%	753	[b]
4453	Beer, Wine, and Liquor Stores	142,586	2.1%	124	[b]
4461	Health and Personal Care Stores	1,113,634	2.1%	4,241	[b]
4471	Gasoline Stations	913,467	2.1%	18,807	
4481	Clothing Stores	1,259,686	2.5%	777	[b]
4482	Shoe Stores	201,079	2.5%	31	[b]
4483	Jewelry, Luggage, and Leather Goods Stores	170,685	2.5%	1,748	[b]
4511	Sporting Goods, Hobby, and Musical Instrument Stores	442,281	2.5%	11,087	
4512	Book, Periodical, and Music Stores	195,732	2.5%	176	[b]
4521	Department Stores	1,532,456	2.1%	11,463	[b]
4529	Other General Merchandise Stores	1,269,995	2.1%	20,840	[b]
4531	Florists	98,373	2.1%	182	[b]
4532	Office Supplies, Stationery, and Gift Stores	337,789	2.1%	7,240	
4533	Used Merchandise Stores	133,533	2.4%	1,270	[b]
4539	Other Miscellaneous Store Retailers	270,150	2.4%	6,466	
4541	Electronic Shopping and Mail-Order Houses	263,979	2.4%	2,123	[b]
4542	Vending Machine Operators	51,645	2.4%	1,236	
4543	Direct Selling Establishments	206,114	2.4%	4,934	
4811	Scheduled Air Transportation	432,485	7.0%	30,069	
4812	Nonscheduled Air Transportation	42,289	7.0%	2,940	
4831	Deep Sea, Coastal, and Great Lakes Water Transportation	47,510	3.4%	1,376	[b]
4832	Inland Water Transportation	20,928	3.4%	629	[b]
4841	General Freight Trucking	1,049,957	3.5%	36,767	
4842	Specialized Freight Trucking	482,356	3.5%	16,891	
4851	Urban Transit Systems	49,414	2.3%	1,121	
4852	Interurban and Rural Bus Transportation	16,465	2.3%	374	
4853	Taxi and Limousine Service	69,226	2.3%	1,570	
4854	School and Employee Bus Transportation	194,765	2.3%	4,418	
4855	Charter Bus Industry	27,929	2.3%	634	
4859	Other Transit and Ground Passenger Transportation	60,919	2.3%	1,382	
4861	Pipeline Transportation of Crude Oil	7,529	8.8%	661	
4862	Pipeline Transportation of Natural Gas	22,248	8.8%	1,952	
4869	Other Pipeline Transportation	9,419	8.8%	826	
4871	Scenic and Sightseeing Transportation, Land	9,218	N/A	N/A	
4872	Scenic and Sightseeing Transportation, Water	15,280	N/A	N/A	
4879	Scenic and Sightseeing Transportation, Other	2,171	N/A	N/A	
4881	Support Activities for Air Transportation	158,320	4.2%	6,707	

Table V-4, contd.
Estimated Number of Employees Using Fall Protection Equipment

NAICS	NAICS DESCRIPTION	Total Employment	Employees Using Fall Protection [a]		
			Percent	Number [c]	
4882	Support Activities for Rail Transportation	28,090	4.2%	1,190	
4883	Support Activities for Water Transportation	91,795	14.2%	5,656	[b]
4884	Support Activities for Road Transportation	71,831	4.2%	3,043	
4885	Freight Transportation Arrangement	198,326	4.2%	1,940	[b]
4889	Other Support Activities for Transportation	31,227	4.2%	950	[b]
4921	Couriers	525,610	4.2%	12,977	[b]
4922	Local Messengers and Local Delivery	45,773	4.2%	149	[b]
4931	Warehousing and Storage	595,325	3.5%	18,718	[b]
5111	Newspaper, Periodical, Book, and Directory Publishers	699,906	1.8%	5,668	[b]
5112	Software Publishers	339,833	0.9%	2,276	[b]
5121	Motion Picture and Video Industries	308,750	N/A	N/A	
5122	Sound Recording Industries	22,481	9.8%	233	[b]
5151	Radio and Television Broadcasting	262,248	9.8%	2,872	[b]
5152	Cable and Other Subscription Programming	39,735	9.8%	3,883	
5161	Internet Publishing and Broadcasting	41,588	N/A	N/A	
5171	Wired Telecommunications Carriers	634,540	9.8%	62,004	
5172	Wireless Telecommunications Carriers (except Satellite)	241,407	9.8%	13,503	[b]
5173	Telecommunications Resellers	32,352	9.8%	N/A	
5174	Satellite Telecommunications	11,514	9.8%	1,125	
5175	Cable and Other Program Distribution	231,756	N/A	N/A	
5179	Other Telecommunications	10,197	N/A	N/A	
5181	Internet Service Providers and Web Search Portals	80,208	N/A	N/A	
5182	Data Processing, Hosting, and Related Services	385,110	N/A	N/A	
5191	Other Information Services	54,621	N/A	N/A	
5211	Monetary Authorities - Central Bank	20,019	N/A	N/A	
5221	Depository Credit Intermediation	2,155,349	N/A	N/A	
5222	Nondepository Credit Intermediation	765,267	N/A	N/A	
5223	Activities Related to Credit Intermediation	360,912	N/A	N/A	
5231	Securities and Commodity Contracts Intermediation and Brokerage	516,295	N/A	N/A	
5232	Securities and Commodity Exchanges	8,526	N/A	N/A	
5239	Other Financial Investment Activities	416,511	N/A	N/A	
5241	Insurance Carriers	1,438,696	0.9%	4,071	[b]
5242	Agencies, Brokerages, and Other Insurance Related Activities	939,126	0.9%	1,138	[b]
5259	Other Investment Pools and Funds	26,397	0.9%	230	
5311	Lessors of Real Estate	544,635	0.9%	4,746	
5312	Offices of Real Estate Agents and Brokers	377,256	0.9%	3,287	

Table V-4, contd.
Estimated Number of Employees Using Fall Protection Equipment

NAICS	NAICS DESCRIPTION	Total Employment	Employees Using Fall Protection [a]		
			Percent	Number [c]	
5313	Activities Related to Real Estate	631,478	0.9%	5,503	
5321	Automotive Equipment Rental and Leasing	184,468	0.9%	1,607	
5322	Consumer Goods Rental	253,627	0.9%	2,210	
5323	General Rental Centers	35,885	0.9%	313	
5324	Commercial and Industrial Machinery and Equipment Rental and Leasing	159,968	0.9%	1,394	
5331	Lessors of Nonfinancial Intangible Assets (except Copyrighted Works)	29,486	0.9%	257	
5411	Legal Services	1,219,383	0.9%	583	[b]
5412	Accounting, Tax Preparation, Bookkeeping, and Payroll Services	1,356,770	0.9%	7,473	[b]
5413	Architectural, Engineering, and Related Services	1,390,573	1.2%	17,161	
5414	Specialized Design Services	130,062	1.2%	1,605	
5415	Computer Systems Design and Related Services	1,215,296	1.2%	14,998	
5416	Management, Scientific, and Technical Consulting Services	1,039,301	1.2%	12,826	
5417	Scientific Research and Development Services	672,666	1.2%	8,301	
5418	Advertising and Related Services	433,800	1.2%	5,353	
5419	Other Professional, Scientific, and Technical Services	596,243	1.2%	4,103	[b]
5511	Management of Companies and Enterprises	2,915,644	0.9%	25,407	
5611	Office Administrative Services	497,872	0.9%	4,338	
5612	Facilities Support Services	164,637	0.9%	1,435	
5613	Employment Services	5,101,697	0.9%	44,456	
5614	Business Support Services	778,731	0.9%	4,546	[b]
5615	Travel Arrangement and Reservation Services	253,539	0.9%	1,729	[b]
5616	Investigation and Security Services	802,010	0.9%	6,989	
5617	Services to Buildings and Dwellings	1,707,203	0.9%	14,876	
5619	Other Support Services	352,603	0.9%	3,073	
5621	Waste Collection	176,912	0.9%	1,542	
5622	Waste Treatment and Disposal	56,343	0.9%	491	
5629	Remediation and Other Waste Management Services	112,079	0.9%	977	
6111	Elementary and Secondary Schools	802,963	N/A	N/A	
6112	Junior Colleges	85,892	N/A	N/A	
6113	Colleges, Universities, and Professional Schools	1,534,226	N/A	N/A	
6114	Business Schools and Computer and Management Training	67,537	N/A	N/A	
6115	Technical and Trade Schools	119,970	N/A	N/A	
6116	Other Schools and Instruction	292,730	N/A	N/A	
6117	Educational Support Services	76,196	N/A	N/A	
6211	Offices of Physicians	2,136,673	1.3%	3,829	[b]

Table V-4, contd.
Estimated Number of Employees Using Fall Protection Equipment

NAICS	NAICS DESCRIPTION	Total Employment	Employees Using Fall Protection [a]		
			Percent	Number	[c]
6212	Offices of Dentists	817,396	1.3%	411	[b]
6213	Offices of Other Health Practitioners	589,355	1.3%	628	[b]
6214	Outpatient Care Centers	692,430	1.3%	4,664	[b]
6215	Medical and Diagnostic Laboratories	228,067	1.3%	499	[b]
6216	Home Health Care Services	972,511	1.3%	1,202	[b]
6219	Other Ambulatory Health Care Services	246,853	1.3%	2,920	[b]
6221	General Medical and Surgical Hospitals	4,953,821	1.3%	62,825	
6222	Psychiatric and Substance Abuse Hospitals	216,745	1.3%	2,749	
6223	Specialty (except Psychiatric and Substance Abuse) Hospitals	199,974	1.3%	2,480	[b]
6231	Nursing Care Facilities	1,640,524	1.3%	20,805	
6232	Residential Mental Retardation, Mental Health and Substance Abuse Facilities	553,058	1.3%	5,229	[b]
6233	Community Care Facilities for the Elderly	640,128	1.3%	8,118	
6239	Other Residential Care Facilities	159,423	1.3%	2,022	
6241	Individual and Family Services	1,075,387	1.3%	5,345	[b]
6242	Community Food and Housing, and Emergency and Other Relief Services	159,534	1.3%	2,023	
6243	Vocational Rehabilitation Services	338,121	1.3%	3,752	[b]
6244	Child Day Care Services	831,361	1.3%	1,699	[b]
7111	Performing Arts Companies	133,511	N/A	N/A	
7112	Spectator Sports	120,281	N/A	N/A	
7113	Promoters of Performing Arts, Sports, and Similar Events	107,105	N/A	N/A	
7114	Agents and Managers for Artists, Athletes, Entertainers, and Other Public Figures	16,417	N/A	N/A	
7115	Independent Artists, Writers, and Performers	47,600	N/A	N/A	
7121	Museums, Historical Sites, and Similar Institutions	123,177	N/A	N/A	
7131	Amusement Parks and Arcades	136,390	N/A	N/A	
7132	Gambling Industries	195,977	N/A	N/A	
7139	Other Amusement and Recreation Industries	1,093,197	N/A	N/A	
7211	Traveler Accommodation	1,830,579	0.9%	16,638	
7212	RV (Recreational Vehicle) Parks and Recreational Camps	38,308	0.9%	348	
7213	Rooming and Boarding Houses	11,811	0.9%	107	
7221	Full-Service Restaurants	4,518,780	2.1%	3,362	[b]
7222	Limited-Service Eating Places	4,073,818	2.1%	4,363	[b]
7223	Special Food Services	546,347	2.1%	5,505	[b]
7224	Drinking Places (Alcoholic Beverages)	361,583	2.1%	709	[b]
8111	Automotive Repair and Maintenance	888,301	3.2%	28,165	

Table V-4, contd.
Estimated Number of Employees Using Fall Protection Equipment

NAICS	NAICS DESCRIPTION	Total Employment	Employees Using Fall Protection [a]		
			Percent	Number [c]	
8112	Electronic and Precision Equipment Repair and Maintenance	127,477	2.7%	3,486	
8113	Commercial and Industrial Machinery and Equipment (except Automotive and Electronic) Repair and Maintenance	193,442	2.7%	5,289	
8114	Personal and Household Goods Repair and Maintenance	98,001	2.7%	2,680	
8121	Personal Care Services	612,980	1.4%	366	[b]
8122	Death Care Services	136,806	1.4%	1,584	[b]
8123	Dry-cleaning and Laundry Services	374,377	1.4%	5,255	
8129	Other Personal Services	233,628	1.4%	3,116	[b]
8131	Religious Organizations	1,647,219	0.9%	14,354	
8132	Grantmaking and Giving Services	149,045	0.9%	688	[b]
8133	Social Advocacy Organizations	122,910	0.9%	1,071	
8134	Civic and Social Organizations	328,324	0.9%	2,861	
8139	Business, Professional, Labor, Political, and Similar Organizations	546,048	0.9%	4,758	
	Totals	112,008,852	1.5%	1,629,230	

[a] Source: OSHA PPE Cost Survey. Estimate based on the maximum percent of employees using either body harnesses or body belts. See Eastern Research Group, *PPE Cost Survey: Final Report*. (Exhibit 14, OSHA Docket S-042: Costs of Personal Protective Equipment). Prepared for OSHA under Task Order 3, Base Year, DOL Contract No. J-9-F-9-0010. June 23, 1999.

[b] Number using fall protection constrained to be less than or equal to the number of at-risk employees in construction, installation, maintenance, and repair occupations as shown in Table V-1.

[c] Due to rounding, the number shown may differ from the product of total employment and the percentage using fall protection.

N/A: Estimate not available for this industry.

Source: U.S. Dept. of Labor, OSHA, Directorate of Evaluation and Analysis, Office of Regulatory Analysis, based on U.S. Census Bureau, *Statistics of U.S. Businesses*, 2002, 2006; ERG, 2007; and ERG, 1999.

Table V-5
Wage Rates in Industries Affected by OSHA's Proposed Standard for Walking and Working Surfaces

NAICS	Industry	Production Worker Average Hourly Wage		Production Worker Supervisor Average Hourly Wage	
		Raw	With Fringe Markup	Raw	With Fringe Markup
1131	Timber Tract Operations	$16.51	$23.68[a]	$21.69	$31.12[a]
1132	Forest Nurseries and Gathering of Forest Products	$16.51	$23.68[a]	$21.69	$31.12[a]
1133	Logging	$16.51	$23.68	$21.69	$31.12
1141	Fishing	$16.51	$23.68[a]	$21.69	$31.12[a]
1142	Hunting and Trapping	$16.51	$23.68[a]	$21.69	$31.12[a]
1153	Support Activities for Forestry	$16.51	$23.68[a]	$21.69	$31.12[a]
2111	Oil and Gas Extraction	$22.79	$32.70	$33.22	$47.66
2211	Electric Power Generation, Transmission and Distribution	$28.04	$40.23	$36.27	$52.04
2212	Natural Gas Distribution	$27.38	$39.28	$38.63	$55.42
2213	Water, Sewage and Other Systems	$19.48	$27.95	$27.17	$38.98
3111	Animal Food Manufacturing	$14.86	$21.33	$23.87	$34.25
3112	Grain and Oilseed Milling	$17.27	$24.78	$27.27	$39.12
3113	Sugar and Confectionery Product Manufacturing	$14.50	$20.80	$24.04	$34.49
3114	Fruit and Vegetable Preserving and Specialty Food Manufacturing	$13.95	$20.02	$23.39	$33.56
3115	Dairy Product Manufacturing	$16.33	$23.43	$25.52	$36.61
3116	Animal Slaughtering and Processing	$12.12	$17.39	$22.56	$32.37
3117	Seafood Product Preparation and Packaging	$11.64	$16.70	$21.58	$30.96
3118	Bakeries and Tortilla Manufacturing	$13.74	$19.72	$22.60	$32.42
3119	Other Food Manufacturing	$14.73	$21.13	$24.64	$35.35
3121	Beverage Manufacturing	$16.75	$24.04	$25.59	$36.71
3122	Tobacco Manufacturing	$19.26	$27.63	$24.83	$35.62
3131	Fiber, Yarn, and Thread Mills	$12.46	$17.87	$21.52	$30.88
3132	Fabric Mills	$13.55	$19.44	$22.01	$31.58
3133	Textile and Fabric Finishing and Fabric Coating Mills	$12.97	$18.61	$22.69	$32.55
3141	Textile Furnishings Mills	$12.84	$18.42	$22.09	$31.69
3149	Other Textile Product Mills	$12.09	$17.34	$20.62	$29.58
3151	Apparel Knitting Mills	$11.36	$16.31	$20.88	$29.96
3152	Cut and Sew Apparel Manufacturing	$10.94	$15.70	$19.65	$28.19

Table V-5, contd.
Wage Rates in Industries Affected by OSHA's Proposed Standard for Walking and Working Surfaces

NAICS	Industry	Production Worker Average Hourly Wage		Production Worker Supervisor Average Hourly Wage	
		Raw	With Fringe Markup	Raw	With Fringe Markup
3159	Apparel Accessories and Other Apparel Manufacturing	$11.16	$16.02	$21.07	$30.23
3161	Leather and Hide Tanning and Finishing	$12.98	$18.62	$22.25	$31.92
3162	Footwear Manufacturing	$12.35	$17.72	$22.02	$31.59
3169	Other Leather and Allied Product Manufacturing	$11.87	$17.04	$21.18	$30.39
3211	Sawmills and Wood Preservation	$14.15	$20.30	$24.97	$35.82
3212	Veneer, Plywood, and Engineered Wood Product Manufacturing	$14.35	$20.59	$22.93	$32.90
3219	Other Wood Product Manufacturing	$13.48	$19.34	$22.37	$32.09
3221	Pulp, Paper, and Paperboard Mills	$21.20	$30.41	$31.97	$45.87
3222	Converted Paper Product Manufacturing	$16.39	$23.52	$27.05	$38.81
3231	Printing and Related Support Activities	$16.08	$23.07	$26.26	$37.68
3241	Petroleum and Coal Products Manufacturing	$24.06	$34.52	$33.22	$47.66
3251	Basic Chemical Manufacturing	$22.44	$32.19	$31.94	$45.82
3252	Resin, Synthetic Rubber, and Artificial Synthetic Fibers and Filaments Manufacturing	$20.38	$29.24	$29.38	$42.15
3253	Pesticide, Fertilizer, and Other Agricultural Chemical Manufacturing	$19.76	$28.34	$29.39	$42.17
3254	Pharmaceutical and Medicine Manufacturing	$18.05	$25.90	$30.07	$43.14
3255	Paint, Coating, and Adhesive Manufacturing	$17.17	$24.63	$27.52	$39.48
3256	Soap, Cleaning Compound, and Toilet Preparation Manufacturing	$15.58	$22.36	$26.33	$37.78
3259	Other Chemical Product and Preparation Manufacturing	$17.08	$24.51	$27.38	$39.28
3261	Plastics Product Manufacturing	$14.48	$20.78	$23.45	$33.64
3262	Rubber Product Manufacturing	$16.40	$23.53	$24.52	$35.18
3271	Clay Product and Refractory Manufacturing	$14.86	$21.32	$24.31	$34.88
3272	Glass and Glass Product Manufacturing	$16.15	$23.17	$26.03	$37.35
3273	Cement and Concrete Product Manufacturing	$16.57	$23.78	$24.50	$35.15
3274	Lime and Gypsum Product Manufacturing	$17.95	$25.75	$26.10	$37.45
3279	Other Nonmetallic Mineral Product Manufacturing	$15.63	$22.43	$25.13	$36.05
3311	Iron and Steel Mills and Ferroalloy Manufacturing	$20.88	$29.96	$29.16	$41.84
3312	Steel Product Manufacturing from Purchased Steel	$16.79	$24.09	$25.17	$36.11
3313	Alumina and Aluminum Production and Processing	$17.31	$24.84	$26.04	$37.36

Table V-5, contd.
Wage Rates in Industries Affected by OSHA's Proposed Standard for Walking and Working Surfaces

NAICS	Industry	Production Worker Average Hourly Wage		Production Worker Supervisor Average Hourly Wage	
		Raw	With Fringe Markup	Raw	With Fringe Markup
3314	Nonferrous Metal (except Aluminum) Production and Processing	$18.22	$26.15	$25.68	$36.84
3315	Foundries	$16.53	$23.71	$25.75	$36.94
3321	Forging and Stamping	$16.51	$23.69	$27.19	$39.01
3322	Cutlery and Handtool Manufacturing	$15.77	$22.62	$26.25	$37.66
3323	Architectural and Structural Metals Manufacturing	$15.74	$22.59	$24.65	$35.37
3324	Boiler, Tank, and Shipping Container Manufacturing	$16.78	$24.08	$26.75	$38.38
3325	Hardware Manufacturing	$15.02	$21.55	$25.38	$36.41
3326	Spring and Wire Product Manufacturing	$15.11	$21.68	$25.73	$36.92
3327	Machine Shops; Turned Product; and Screw, Nut, and Bolt Manufacturing	$17.14	$24.59	$27.43	$39.35
3328	Coating, Engraving, Heat Treating, and Allied Activities	$14.36	$20.61	$24.43	$35.05
3329	Other Fabricated Metal Product Manufacturing	$16.24	$23.30	$26.54	$38.08
3331	Agriculture, Construction, and Mining Machinery Manufacturing	$16.49	$23.66	$25.86	$37.10
3332	Industrial Machinery Manufacturing	$17.62	$25.28	$27.37	$39.27
3333	Commercial and Service Industry Machinery Manufacturing	$16.76	$24.05	$27.70	$39.74
3334	Ventilation, Heating, Air-Conditioning, and Commercial Refrigeration Equipment Manufacturing	$15.25	$21.88	$24.94	$35.78
3335	Metalworking Machinery Manufacturing	$18.17	$26.07	$29.39	$42.17
3336	Engine, Turbine, and Power Transmission Equipment Manufacturing	$17.88	$25.65	$28.67	$41.13
3339	Other General Purpose Machinery Manufacturing	$17.01	$24.41	$26.85	$38.52
3341	Computer and Peripheral Equipment Manufacturing	$16.51	$23.68	$25.19	$36.14
3342	Communications Equipment Manufacturing	$16.51	$23.69	$28.44	$40.80
3343	Audio and Video Equipment Manufacturing	$14.63	$20.99	$26.44	$37.93
3344	Semiconductor and Other Electronic Component Manufacturing	$15.64	$22.44	$27.30	$39.17
3345	Navigational, Measuring, Electromedical, and Control Instruments Manufacturing	$17.17	$24.64	$28.73	$41.22
3346	Manufacturing and Reproducing Magnetic and Optical Media	$15.54	$22.30	$24.83	$35.62

Table V-5, contd.
Wage Rates in Industries Affected by OSHA's Proposed Standard for Walking and Working Surfaces

NAICS	Industry	Production Worker Average Hourly Wage		Production Worker Supervisor Average Hourly Wage	
		Raw	With Fringe Markup	Raw	With Fringe Markup
3351	Electric Lighting Equipment Manufacturing	$14.96	$21.46	$24.60	$35.29
3352	Household Appliance Manufacturing	$15.41	$22.11	$23.44	$33.63
3353	Electrical Equipment Manufacturing	$15.92	$22.83	$25.74	$36.93
3359	Other Electrical Equipment and Component Manufacturing	$15.76	$22.61	$25.82	$37.04
3361	Motor Vehicle Manufacturing	$24.39	$34.99	$33.20	$47.63
3362	Motor Vehicle Body and Trailer Manufacturing	$15.92	$22.85	$24.03	$34.48
3363	Motor Vehicle Parts Manufacturing	$18.08	$25.93	$26.45	$37.95
3364	Aerospace Product and Parts Manufacturing	$21.49	$30.84	$30.86	$44.28
3365	Railroad Rolling Stock Manufacturing	$16.59	$23.80	$25.86	$37.10
3366	Ship and Boat Building	$17.27	$24.78	$26.14	$37.50
3369	Other Transportation Equipment Manufacturing	$17.87	$25.63	$25.96	$37.25
3371	Household and Institutional Furniture and Kitchen Cabinet Manufacturing	$14.16	$20.31	$22.65	$32.50
3372	Office Furniture (including Fixtures) Manufacturing	$15.25	$21.88	$24.45	$35.08
3379	Other Furniture Related Product Manufacturing	$13.10	$18.79	$22.91	$32.87
3391	Medical Equipment and Supplies Manufacturing	$15.93	$22.86	$26.98	$38.71
3399	Other Miscellaneous Manufacturing	$14.50	$20.81	$23.81	$34.16
4231	Motor Vehicle and Motor Vehicle Parts and Supplies Merchant Wholesalers	$14.51	$20.82	$23.86	$34.23
4232	Furniture and Home Furnishing Merchant Wholesalers	$14.08	$20.20	$23.94	$34.35
4233	Lumber and Other Construction Materials Merchant Wholesalers	$15.22	$21.84	$24.16	$34.66
4234	Professional and Commercial Equipment and Supplies Merchant Wholesalers	$17.43	$25.01	$25.47	$36.54
4235	Metal and Mineral (except Petroleum) Merchant Wholesalers	$15.90	$22.81	$25.95	$37.23
4236	Electrical and Electronic Goods Merchant Wholesalers	$16.56	$23.76	$26.78	$38.42
4237	Hardware, and Plumbing and Heating Equipment and Supplies Merchant Wholesalers	$16.19	$23.23	$24.91	$35.74
4238	Machinery, Equipment, and Supplies Merchant Wholesalers	$17.87	$25.64	$26.65	$38.24
4239	Miscellaneous Durable Goods Merchant Wholesalers	$13.89	$19.93	$24.46	$35.09

Table V-5, contd.
Wage Rates in Industries Affected by OSHA's Proposed Standard for Walking and Working Surfaces

NAICS	Industry	Production Worker Average Hourly Wage		Production Worker Supervisor Average Hourly Wage	
		Raw	With Fringe Markup	Raw	With Fringe Markup
4241	Paper and Paper Product Merchant Wholesalers	$15.43	$22.13	$26.84	$38.51
4242	Drugs and Druggists' Sundries Merchant Wholesalers	$13.71	$19.67	$25.39	$36.43
4243	Apparel, Piece Goods, and Notions Merchant Wholesalers	$12.62	$18.10	$25.64	$36.79
4244	Grocery and Related Product Wholesalers	$15.43	$22.14	$24.12	$34.61
4245	Farm Product Raw Material Merchant Wholesalers	$12.60	$18.08	$23.56	$33.80
4246	Chemical and Allied Products Merchant Wholesalers	$16.58	$23.79	$25.63	$36.77
4247	Petroleum and Petroleum Products Merchant Wholesalers	$17.73	$25.44	$31.23	$44.81
4248	Beer, Wine, and Distilled Alcoholic Beverage Merchant Wholesalers	$16.73	$24.01	$25.26	$36.24
4249	Miscellaneous Nondurable Goods Merchant Wholesalers	$12.95	$18.59	$22.28	$31.97
4251	Wholesale Electronic Markets and Agents and Brokers	$15.27	$21.91	$25.52	$36.61
4411	Automobile Dealers	$17.48	$25.08	$31.11	$44.63
4412	Other Motor Vehicle Dealers	$15.66	$22.47	$26.21	$37.60
4413	Automotive Parts, Accessories, and Tire Stores	$13.01	$18.67	$25.62	$36.76
4421	Furniture Stores	$12.32	$17.68	$23.96	$34.38
4422	Home Furnishings Stores	$15.42	$22.12	$20.98	$30.10
4431	Electronics and Appliance Stores	$15.57	$22.34	$23.59	$33.85
4441	Building Material and Supplies Dealers	$13.76	$19.74	$23.31	$33.44
4442	Lawn and Garden Equipment and Supplies Stores	$12.52	$17.96	$23.51	$33.73
4451	Grocery Stores	$11.12	$15.95	$20.44	$29.33
4452	Specialty Food Stores	$12.79	$18.35	$19.75	$28.34
4453	Beer, Wine, and Liquor Stores	$12.72	$18.24	$19.64	$28.17[a]
4461	Health and Personal Care Stores	$12.24	$17.56	$21.97	$31.52
4471	Gasoline Stations	$12.75	$18.30	$15.59	$22.37
4481	Clothing Stores	$11.61	$16.66	$23.15	$33.21
4482	Shoe Stores	$11.63	$16.69	$18.33	$28.27
4483	Jewelry, Luggage, and Leather Goods Stores	$17.34	$24.87	$23.21	$33.30
4511	Sporting Goods, Hobby, and Musical Instrument Stores	$12.61	$18.09	$20.43	$29.31
4512	Book, Periodical, and Music Stores	$12.67	$18.18	$20.52	$29.45[a]
4521	Department Stores	$10.60	$15.21	$17.92	$25.71
4529	Other General Merchandise Stores	$11.56	$16.59	$19.79	$28.39
4531	Florists	$9.80	$14.06	$16.77	$24.06[a]

Table V-5, contd.
Wage Rates in Industries Affected by OSHA's Proposed Standard for Walking and Working Surfaces

NAICS	Industry	Production Worker Average Hourly Wage		Production Worker Supervisor Average Hourly Wage	
		Raw	With Fringe Markup	Raw	With Fringe Markup
4532	Office Supplies, Stationery, and Gift Stores	$14.88	$21.35	$18.00	$25.82
4533	Used Merchandise Stores	$10.73	$15.39	$18.43	$26.44
4539	Other Miscellaneous Store Retailers	$13.49	$19.36	$24.27	$34.82
4541	Electronic Shopping and Mail-Order Houses	$12.70	$18.22	$23.15	$33.21
4542	Vending Machine Operators	$14.15	$20.30	$23.80	$34.15
4543	Direct Selling Establishments	$17.20	$24.68	$21.35	$30.63
4811	Scheduled Air Transportation	$39.62	$56.84	$56.15	$80.56[a]
4812	Nonscheduled Air Transportation	$29.95	$42.97	$42.45	$60.90[a]
4831	Deep Sea, Coastal, and Great Lakes Water Transportation	$27.16	$38.96	$38.49	$55.23[a]
4832	Inland Water Transportation	$24.48	$35.12	$34.70	$49.78[a]
4841	General Freight Trucking	$18.96	$27.21	$26.88	$38.57
4842	Specialized Freight Trucking	$17.27	$24.78	$25.47	$36.54
4851	Urban Transit Systems	$15.71	$22.53	$22.26	$31.94[a]
4852	Interurban and Rural Bus Transportation	$17.45	$25.03	$24.73	$35.48[a]
4853	Taxi and Limousine Service	$12.92	$18.54	$18.31	$26.27[a]
4854	School and Employee Bus Transportation	$13.84	$19.85	$19.61	$28.14[a]
4855	Charter Bus Industry	$14.11	$20.25	$20.01	$28.70[a]
4859	Other Transit and Ground Passenger Transportation	$12.56	$18.01	$17.80	$25.53[a]
4861	Pipeline Transportation of Crude Oil	$25.59	$36.71	$30.96	$44.42
4862	Pipeline Transportation of Natural Gas	$24.79	$35.56	$30.12	$43.21
4869	Other Pipeline Transportation	$24.46	$35.09	$31.10	$44.62
4871	Scenic and Sightseeing Transportation, Land	$14.25	$20.44	$20.19	$28.97[a]
4872	Scenic and Sightseeing Transportation, Water	$17.65	$25.33	$25.02	$35.90[a]
4879	Scenic and Sightseeing Transportation, Other	$26.76	$38.39	$37.93	$54.42[a]
4881	Support Activities for Air Transportation	$19.03	$27.30	$26.50	$38.02
4882	Support Activities for Rail Transportation	$16.49	$23.66	$22.95	$32.93
4883	Support Activities for Water Transportation	$24.32	$34.89	$26.45	$37.95
4884	Support Activities for Road Transportation	$15.25	$21.87	$23.21	$33.30
4885	Freight Transportation Arrangement	$16.24	$23.29	$21.40	$30.70
4889	Other Support Activities for Transportation	$13.16	$18.88	$25.76	$36.96
4921	Couriers	$18.35	$26.32	$29.81	$42.77[a]
4922	Local Messengers and Local Delivery	$14.83	$21.28	$23.41	$33.59[a]

Table V-5, contd.
Wage Rates in Industries Affected by OSHA's Proposed Standard for Walking and Working Surfaces

NAICS	Industry	Production Worker Average Hourly Wage		Production Worker Supervisor Average Hourly Wage	
		Raw	With Fringe Markup	Raw	With Fringe Markup
4931	Warehousing and Storage	$15.24	$21.86	$24.76	$35.52
5111	Newspaper, Periodical, Book, and Directory Publishers	$15.69	$22.51	$26.86	$38.54
5112	Software Publishers	$16.68	$23.93	$29.09	$41.74
5121	Motion Picture and Video Industries	$17.85	$25.61	$27.68	$39.71
5122	Sound Recording Industries	$17.86	$25.62	$31.14	$44.68[a]
5151	Radio and Television Broadcasting	$19.69	$28.25	$34.33	$49.26[a]
5152	Cable and Other Subscription Programming	$22.59	$32.41	$39.39	$56.52[a]
5161	Internet Publishing and Broadcasting	$22.59	$32.41[a]	$39.39	$54.91[a]
5171	Wired Telecommunications Carriers	$25.57	$36.69	$44.60	$63.98[a]
5172	Wireless Telecommunications Carriers (except Satellite)	$25.17	$36.11	$43.88	$62.96[a]
5173	Telecommunications Resellers	$25.17	$36.11[a]	$43.88	$62.96[a]
5174	Satellite Telecommunications	$26.68	$38.28	$46.53	$64.85[a]
5175	Cable and Other Program Distribution	$25.17	$36.11[a]	$43.88	$62.96[a]
5179	Other Telecommunications	$27.22	$39.05	$47.46	$66.15[a]
5181	Internet Service Providers and Web Search Portals	$17.93	$25.72	$25.72	$36.90
5182	Data Processing, Hosting, and Related Services	$16.27	$23.35	$26.96	$38.68
5191	Other Information Services	$21.11	$30.29	$36.29	$52.07[a]
5211	Monetary Authorities - Central Bank	$13.18	$18.92	$22.67	$32.52[a]
5221	Depository Credit Intermediation	$15.80	$22.66	$27.16	$38.97
5222	Nondepository Credit Intermediation	$11.56	$16.58	$19.87	$28.51[a]
5223	Activities Related to Credit Intermediation	$16.93	$24.29	$29.10	$39.40[a]
5231	Securities and Commodity Contracts Intermediation and Brokerage	$21.31	$30.58	$36.64	$49.60[a]
5232	Securities and Commodity Exchanges	$18.81	$26.98	$32.33	$43.77[a]
5239	Other Financial Investment Activities	$18.13	$26.01	$26.77	$38.41
5241	Insurance Carriers	$13.17	$18.89	$19.44	$27.90
5242	Agencies, Brokerages, and Other Insurance Related Activities	$9.21	$13.21	$13.59	$21.42
5259	Other Investment Pools and Funds	$16.52	$23.71	$24.40	$35.01
5311	Lessors of Real Estate	$14.52	$20.84	$23.63	$33.90
5312	Offices of Real Estate Agents and Brokers	$14.76	$21.18	$31.16	$44.70[a]
5313	Activities Related to Real Estate	$14.70	$21.09	$31.03	$44.52

Table V-5, contd.
Wage Rates in Industries Affected by OSHA's Proposed Standard for Walking and Working Surfaces

NAICS	Industry	Production Worker Average Hourly Wage		Production Worker Supervisor Average Hourly Wage	
		Raw	With Fringe Markup	Raw	With Fringe Markup
5321	Automotive Equipment Rental and Leasing	$13.55	$19.44	$21.56	$30.93[a]
5322	Consumer Goods Rental	$12.88	$18.48	$22.35	$32.07
5323	General Rental Centers	$14.12	$20.26	$22.47	$32.24
5324	Commercial and Industrial Machinery and Equipment Rental and Leasing	$18.22	$26.13	$25.41	$36.46
5331	Lessors of Nonfinancial Intangible Assets (except Copyrighted Works)	$12.65	$18.15	$20.13	$28.88[a]
5411	Legal Services	$12.19	$17.49	$21.13	$30.31[a]
5412	Accounting, Tax Preparation, Bookkeeping, and Payroll Services	$15.66	$22.47	$27.15	$38.95
5413	Architectural, Engineering, and Related Services	$19.64	$28.18	$30.52	$43.79
5414	Specialized Design Services	$14.85	$21.30	$25.44	$36.50
5415	Computer Systems Design and Related Services	$21.22	$30.45	$28.53	$40.93
5416	Management, Scientific, and Technical Consulting Services	$18.51	$26.55	$26.93	$38.64
5417	Scientific Research and Development Services	$21.65	$31.05	$33.65	$48.28
5418	Advertising and Related Services	$14.91	$21.39	$25.33	$36.34
5419	Other Professional, Scientific, and Technical Services	$15.37	$22.06	$24.60	$35.29
5511	Management of Companies and Enterprises	$18.15	$26.05	$27.21	$39.04
5611	Office Administrative Services	$15.23	$21.85	$25.38	$36.41
5612	Facilities Support Services	$17.04	$24.45	$28.45	$40.82
5613	Employment Services	$11.66	$16.72	$22.86	$32.80
5614	Business Support Services	$15.58	$22.36	$25.63	$36.77
5615	Travel Arrangement and Reservation Services	$14.22	$20.41	$23.39	$33.56[a]
5616	Investigation and Security Services	$17.58	$25.22	$25.31	$36.31
5617	Services to Buildings and Dwellings	$11.70	$16.79	$20.72	$29.73
5619	Other Support Services	$13.97	$20.05	$23.35	$33.50
5621	Waste Collection	$16.50	$23.68	$28.46	$40.83
5622	Waste Treatment and Disposal	$18.78	$26.95	$30.05	$43.11
5629	Remediation and Other Waste Management Services	$18.53	$26.59	$24.94	$35.78
6111	Elementary and Secondary Schools	$14.21	$20.39	$20.96	$30.07
6112	Junior Colleges	$15.51	$22.26	$26.16	$37.53
6113	Colleges, Universities, and Professional Schools	$15.97	$22.91	$25.35	$36.37

Table V-5, contd.
Wage Rates in Industries Affected by OSHA's Proposed Standard for Walking and Working Surfaces

NAICS	Industry	Production Worker Average Hourly Wage		Production Worker Supervisor Average Hourly Wage	
		Raw	With Fringe Markup	Raw	With Fringe Markup
6114	Business Schools and Computer and Management Training	$15.63	$22.42	$24.81	$35.59[a]
6115	Technical and Trade Schools	$19.63	$28.16	$31.15	$44.70[a]
6116	Other Schools and Instruction	$13.93	$19.98	$22.10	$31.71[a]
6117	Educational Support Services	$12.13	$17.40	$25.60	$36.73
6211	Offices of Physicians	$13.70	$19.65	$26.27	$37.69
6212	Offices of Dentists	$14.22	$20.40	$25.17	$36.14
6213	Offices of Other Health Practitioners	$12.24	$17.56	$24.47	$35.11
6214	Outpatient Care Centers	$13.79	$19.79	$27.57	$39.56[a]
6215	Medical and Diagnostic Laboratories	$16.38	$23.51	$28.17	$40.42
6216	Home Health Care Services	$12.56	$18.01	$25.10	$36.01[a]
6219	Other Ambulatory Health Care Services	$15.26	$21.89	$26.27	$37.69
6221	General Medical and Surgical Hospitals	$14.00	$20.08	$25.32	$36.33
6222	Psychiatric and Substance Abuse Hospitals	$14.84	$21.28	$27.21	$39.04
6223	Specialty (except Psychiatric and Substance Abuse) Hospitals	$14.90	$21.37	$30.62	$43.93
6231	Nursing Care Facilities	$11.05	$15.86	$19.59	$28.11
6232	Residential Mental Retardation, Mental Health and Substance Abuse Facilities	$11.95	$17.14	$20.78	$29.81
6233	Community Care Facilities for the Elderly	$11.43	$16.40	$18.73	$26.87
6239	Other Residential Care Facilities	$12.77	$18.32	$20.93	$30.02[a]
6241	Individual and Family Services	$10.82	$15.52	$16.86	$24.19
6242	Community Food and Housing, and Emergency and Other Relief Services	$12.50	$17.93	$19.48	$27.95[a]
6243	Vocational Rehabilitation Services	$10.72	$15.38	$17.19	$24.66
6244	Child Day Care Services	$10.64	$15.26	$16.58	$23.79[a]
7111	Performing Arts Companies	$19.27	$27.65	$33.74	$48.40[a]
7112	Spectator Sports	$16.84	$24.16	$29.48	$42.30
7113	Promoters of Performing Arts, Sports, and Similar Events	$14.12	$20.25	$24.71	$35.46[a]
7114	Agents and Managers for Artists, Athletes, Entertainers, and Other Public Figures	$16.64	$23.87	$29.12	$42.24[a]
7115	Independent Artists, Writers, and Performers	$15.43	$22.13	$27.00	$38.74[a]
7121	Museums, Historical Sites, and Similar Institutions	$14.44	$20.72	$25.27	$36.26[a]

Table V-5, contd.
Wage Rates in Industries Affected by OSHA's Proposed Standard for Walking and Working Surfaces

NAICS	Industry	Production Worker Average Hourly Wage		Production Worker Supervisor Average Hourly Wage	
		Raw	With Fringe Markup	Raw	With Fringe Markup
7131	Amusement Parks and Arcades	$14.78	$21.21	$25.88	$37.13[a]
7132	Gambling Industries	$12.71	$18.24	$22.26	$31.93[a]
7139	Other Amusement and Recreation Industries	$12.54	$17.98	$23.85	$34.22
7211	Traveler Accommodation	$10.76	$15.43	$19.88	$28.52
7212	RV (Recreational Vehicle) Parks and Recreational Camps	$11.16	$16.01	$20.62	$29.58[a]
7213	Rooming and Boarding Houses	$10.56	$15.16	$19.53	$28.02[a]
7221	Full-Service Restaurants	$10.02	$14.38	$24.58	$35.27
7222	Limited-Service Eating Places	$9.09	$13.04	$13.85	$19.87
7223	Special Food Services	$12.19	$17.49	$23.46	$33.66
7224	Drinking Places (Alcoholic Beverages)	$10.06	$14.44	$19.37	$27.79[a]
8111	Automotive Repair and Maintenance	$15.33	$21.99	$24.80	$35.58
8112	Electronic and Precision Equipment Repair and Maintenance	$19.06	$27.34	$26.52	$38.05
8113	Commercial and Industrial Machinery and Equipment (except Automotive and Electronic) Repair and Maintenance	$18.59	$26.67	$26.26	$37.68
8114	Personal and Household Goods Repair and Maintenance	$15.60	$22.38	$23.50	$33.72
8121	Personal Care Services	$9.70	$13.92	$16.66	$23.91[a]
8122	Death Care Services	$12.30	$17.65	$21.12	$30.30[a]
8123	Dry-cleaning and Laundry Services	$10.96	$15.73	$18.82	$27.00
8129	Other Personal Services	$10.90	$15.64	$22.54	$32.34
8131	Religious Organizations	$12.35	$17.72	$24.11	$34.59[a]
8132	Grantmaking and Giving Services	$13.00	$18.65	$25.36	$36.39[a]
8133	Social Advocacy Organizations	$12.62	$18.11	$24.63	$35.34[a]
8134	Civic and Social Organizations	$11.26	$16.16	$21.98	$31.54
8139	Business, Professional, Labor, Political, and Similar Organizations	$13.85	$19.87	$27.03	$38.78

[a] Value imputed from 3-digit NAICS averages.
Source: U.S. Dept. of Labor, OSHA, Directorate of Evaluation and Analysis, Office of Regulatory Analysis, based on ERG, 2007; BLS *Occupational Employment Statistics* Survey, 2008, and BLS, *Employer Costs for Employee Compensation – June 2008*.

BILLING CODE 4510–29–C

D. Benefits, Net Benefits, Cost Effectiveness, and Sensitivity Analysis

This subsection reviews the populations in general industry that are at risk of occupational injury or death due to hazards addressed by this proposal, and assesses the potential benefits associated with the proposed updates to subparts D and I. OSHA believes that compliance with the proposed rule will yield substantial benefits in terms of lives saved, injuries avoided, and reduced accident-related costs.

As described in section C above, the employees affected by the proposed standard work largely in construction, installation, maintenance, and repair. According to the Bureau of Labor Statistics' 2008 Occupational Employment Statistics survey, there are approximately 112.0 million employees in industries within the scope of this proposal; 5.3 million employees engaged in construction, installation, maintenance, and repair operations in general industry that would be directly affected by this proposal; and 1.6 million employees in general industry using personal fall protection equipment. As explained earlier, to account for all of these employees, OSHA identified production employees classified in BLS occupational codes defining construction, installation, maintenance, and repair in the following industry sectors: Agriculture; oil and gas extraction; utilities; manufacturing; wholesale trade; retail trade; transportation; information; finance and insurance; real estate; professional, scientific, and technical services; management of companies; enterprise administration; education; health care; arts, entertainment, and recreation; and other services. This approach assumes that employees in construction occupations, but employed by general industry rather than construction employers, are routinely engaged in what OSHA labels maintenance (*i.e.,* a general industry activity) rather than construction activities. The methodology for deriving these estimates is discussed in the ERG report (ERG, 2007, Ex. 6).

This subsection first examines the available data on the number of baseline injuries and fatalities among affected employees; then assesses the extent to which the standard can prevent those injuries and fatalities; and finally estimates some of the economic benefits associated with the prevented injuries and fatalities. OSHA's proposed standards for subpart D, Walking-Working Surfaces, and subpart I, Personal Protective Equipment (Personal Fall Protection Systems), would produce benefits to the extent compliance prevents injuries and fatalities that would not be prevented by the existing OSHA standards.

Profile of Fall Accidents

Fall Fatalities

OSHA examined fall fatalities using two databases. As a baseline for determining the average number of fall fatalities per year, OSHA examined data from the BLS Census of Fatal Occupational Injuries (CFOI) for 2006 and 2007. To provide a more detailed breakdown of the kinds of falls included in this total, OSHA examined CFOI data for the longer period of 1992 to 2002.

As shown in Table V–6, the BLS Census of Fatal Occupational Injuries (CFOI) reported 285 and 267 fatal falls to lower levels for 2006 and 2007, respectively, in industries covered by the proposed standard. Distinguished from the larger category of all falls—a set of accidents that includes falls on the same level and jumps to a lower level—the narrower category of falls to a lower level are the types of falls directly addressed by OSHA's proposed standard. For purposes of estimating the overall rate of fall fatalities for this benefits analysis, OSHA took the average of these two years—276 fall fatalities per year. Over the two-year period, industries in the professional, scientific, technical, administrative, and support services (NAICS 541 and 561) accounted for 30 percent of the fatal falls, while the manufacturing (NAICS 31–33) and transportation (NAICS 48) sectors accounted for 10.9 and 6.0 percent of the fall fatalities, respectively. BLS reported the highest number of fatal falls in NAICS 561, Administrative and Support Services. Although not shown in the table, a large majority of these fatalities—82 percent for the two-year period 2006–2007—occurred in the industry concerned with services to buildings and dwellings (NAICS 5617).

TABLE V–6—FATALITIES FROM FALLS TO A LOWER LEVEL—GENERAL INDUSTRY, 2006 & 2007

NAICS	NAICS description	Number of fatalities	
		2006	2007
113	Forestry and Logging	3	4
114	Fishing, Hunting and Trapping	0	0
115	Support Activities for Agriculture and Forestry	0	0
211	Oil and Gas Extraction	0	0
213111	Oil and Gas Well Drilling	5	4
221	Utilities	0	0
311	Food Manufacturing	5	4
312	Beverage and Tobacco Product Manufacturing	0	0
313	Textile Mills	0	0
314	Textile Product Mills	0	0
315	Apparel Manufacturing	0	0
316	Leather and Allied Product Manufacturing	0	0
321	Wood Product Manufacturing	7	0
322	Paper Manufacturing	0	0
323	Printing and Related Support Activities	0	0
324	Petroleum and Coal Products Manufacturing	0	0
325	Chemical Manufacturing	3	3
326	Plastics and Rubber Products Manufacturing	3	0
327	Nonmetallic Mineral Product Manufacturing	3	0
331	Primary Metal Manufacturing	0	0
332	Fabricated Metal Product Manufacturing	10	7
333	Machinery Manufacturing	0	0
334	Computer and Electronic Product Manufacturing	0	0
335	Electrical Equipment, Appliance, and Component Manufacturing	0	0

TABLE V–6—FATALITIES FROM FALLS TO A LOWER LEVEL—GENERAL INDUSTRY, 2006 & 2007—Continued

NAICS	NAICS description	Number of fatalities	
		2006	2007
336	Transportation Equipment Manufacturing	7	4
337	Furniture and Related Product Manufacturing	0	0
339	Miscellaneous Manufacturing	0	4
423	Merchant Wholesalers, Durable Goods	4	7
424	Merchant Wholesalers, Nondurable Goods	12	6
425	Wholesale Electronic Markets and Agents and Brokers	0	0
441	Motor Vehicle and Parts Dealers	4	0
442	Furniture and Home Furnishings Stores	0	0
443	Electronics and Appliance Stores	0	0
444	Building Material and Garden Equipment and Supplies Dealers	6	4
445	Food and Beverage Stores	5	0
446	Health and Personal Care Stores	0	0
447	Gasoline Stations	0	0
448	Clothing and Clothing Accessories Stores	0	0
451	Sporting Goods, Hobby, Book, and Music Stores	0	0
452	General Merchandise Stores	0	0
453	Miscellaneous Store Retailers	0	0
454	Nonstore Retailers	0	0
481	Air Transportation	0	0
482	Railroads	0	0
483	Water Transportation	0	0
484	Truck Transportation	11	18
485	Transit and Ground Passenger Transportation	0	0
486	Pipeline Transportation	0	0
487	Scenic and Sightseeing Transportation	0	0
488	Support Activities for Transportation	0	4
492	Couriers and Messengers	0	0
493	Warehousing and Storage	4	5
511	Publishing Industries (except Internet)	0	0
512	Motion Picture and Sound Recording Industries	0	0
515	Broadcasting (except Internet)	0	0
516	Internet Publishing and Broadcasting	0	0
517	Telecommunications	6	3
518	Internet Service Providers, Web Search Portals, and Data Processing Services	0	0
519	Other Information Services	0	0
521	Monetary Authorities—Central Bank	0	0
522	Credit Intermediation and Related Activities	0	0
523	Securities, Commodity Contracts, and Other Financial Investments and Related Activities	0	0
524	Insurance Carriers and Related Activities	3	0
525	Funds, Trusts, and Other Financial Vehicles	0	0
531	Real Estate	10	9
532	Rental and Leasing Services	0	0
533	Lessors of Nonfinancial Intangible Assets (except Copyrighted Works)	0	0
541	Professional, Scientific, and Technical Services	7	10
551	Management of Companies and Enterprises	0	0
561	Administrative and Support Services	66	80
562	Waste Management and Remediation Services	5	0
611	Educational Services	0	0
621	Ambulatory Health Care Services	0	0
622	Hospitals	0	0
623	Nursing and Residential Care Facilities	4	0
624	Social Assistance	0	3
711	Performing Arts, Spectator Sports, and Related Industries	6	3
712	Museums, Historical Sites, and Similar Institutions	0	0
713	Amusement, Gambling, and Recreation Industries	0	7
721	Accommodation	8	5
722	Food Services and Drinking Places	4	7
811	Repair and Maintenance	6	4
812	Personal and Laundry Services	0	0
813	Religious, Grantmaking, Civic, Professional, and Similar Organizations	11	7
	Industry not specified [a]	57	55
Total		285	267

[a] Includes falls from ship, boat, not elsewhere classified. Source: U.S. Dept. of Labor, OSHA, Directorate of Evaluation and Analysis, Office of Regulatory Analysis, based on Bureau of Labor Statistics, *Census of Fatal Occupational Injuries,* 2006 and 2007.

To assess the benefits of this rule, it is necessary to know not only the total annual number of fall fatalities, but also the numbers of various types of fall fatalities. Quantifying the various types of fatal falls is necessary because the

proposal is expected to prevent fall fatalities to different degrees for different kinds of falls. Table V–7 shows, for the eleven-year period 1992 to 2002, the breakdown of fall fatalities by type of fall based on CFOI data. As shown, falls to a lower level (distinguished from falls on the same level) accounted for about 78 percent of total fall fatalities. Overall, on average, falls to a lower level accounted for 217 of the 279 fatal falls per year that occurred in general industry establishments. On a sector-by-sector basis, falls to a lower level as a percentage of all fatal falls ranged from 59 percent for the retail trade sector to 95 percent for the agricultural services sector. As the table also shows, fatal falls from ladders averaged 41 per year over the eleven-year period, while fatal falls from scaffolds averaged 15 per year. The category of "other" falls to a lower level includes falls from floors, docks, or ground level; falls from nonmoving vehicles; and falls from building girders and other structural steel.

TABLE V–7—FATAL FALLS BY TYPE OF FALL AND INDUSTRY SECTOR, 1992 TO 2002

Industry sector	All falls	Falls to a lower level				
		Total	From a ladder	From a roof	From a scaffold	Other
Total Fatal Falls, 1992 to 2002						
Agricultural services	366	348	47	11	3	287
Manufacturing	665	535	80	64	75	316
Transportation, communications, electric, gas, and sanitary services	438	365	55	9	8	293
Wholesale trade	196	163	22	10	0	131
Retail trade	318	188	73	9	0	106
Finance, insurance, and real estate	138	111	37	14	0	60
Services	944	672	141	84	77	370
Total	3,065	2,382	455	201	163	1,563
Average Fatal Falls per Year						
Agricultural services	33	32	4	1	0	26
Manufacturing	60	49	7	6	7	29
Transportation, communications, electric, gas, and sanitary services	40	33	5	1	1	27
Wholesale trade	18	15	2	1	0	12
Retail trade	29	17	7	1	0	10
Finance, insurance, and real estate	13	10	3	1	0	5
Services	86	61	13	8	7	34
Total	279	217	41	18	15	142

Note: Titles for industry sectors are taken from the SIC system of industry categorization. Source: ERG, 2007, based on BLS, *Census of Fatal Occupational Injuries,* 1992–2002.

Fall Injuries

Table V–8, based on BLS's *2007 Survey of Occupational Injuries and Illnesses,* shows the total number of lost workday injuries due to falls in general industry, by type of fall. This table will form the basis for OSHA's estimate of the number of lost-workday injuries prevented by the proposal.

Table V–9, based on BLS's *2007 Survey of Occupational Injuries and Illnesses,* provides additional details about the lost-workday injury rates for the two major categories of falls: falls to a lower level and falls to the same level. Excluding industry groups where the data may have been incomplete, the combined fall injury rate ranges from a low of 2.5 cases per 10,000 workers in NAICS 523 (Securities, Commodity Contracts, and Other Financial Investments and Related Activities) to a high of 73.5 per 10,000 employees in NAICS 481 (Air Transportation). Of the 78 affected industries with reported fall injury data, 25 had fall injury rates in excess of 30 cases per 10,000 employees, while 23 had fall injury rates between 20 and 30 cases per 10,000 employees.

Table V–10, also based on BLS's *2007 Survey of Occupational Injuries and Illnesses,* shows lost-workday fall-related injury rates by specific type of fall, disaggregated by the major industry sectors covered by the proposed standard. These statistics show that, unlike fall fatalities, falls to a lower level represent a relatively small share of injurious, non-fatal falls. For example, in manufacturing, falls to the same level accounted for 68 percent of all falls resulting in lost-workday injuries, while falls to a lower level accounted for only 27 percent. The majority of accidents in the fall-to-same-level category are characterized as a fall to a floor, walkway, or other surface.

TABLE V–8—ESTIMATED ANNUAL NUMBER OF LOST-WORKDAY FALLS IN WORKPLACES AFFECTED BY THE PROPOSED STANDARD

Falls by type	Distribution of falls resulting in lost workdays
All Falls	215,807
Fall to lower level	55,706
Fall down stairs or steps	16,916
Fall from floor, dock, or ground level	3,878
Fall from ladder	12,472
Fall from piled or stacked material	283
Fall from roof	959
Fall from scaffold, staging	434
Fall from building girders or other structural steel	131
Fall from nonmoving vehicle	11,018
Fall to lower level, n.e.c. (a)	8,433
Fall to lower level, unspecified	1,192
Fall on same level	152,788
Fall from ship, boat, n.e.c.	30
Other falls	7,281
Total	215,807

(a) n.e.c.—Not Elsewhere Classified

Source: U.S. Dept. of Labor, OSHA, Directorate of Evaluation and Analysis, Office of Regulatory Analysis, 2009, based on Bureau of Labor Statistics, *Survey of Occupational Injuries and Illnesses, 2007.*

BILLING CODE 4510–29–P

Table V-9
Injuries From Falls - General Industry, 2007
(Lost Work Day Cases per 10,000 Workers)

NAICS	NAICS Description	Falls - To Lower Level	Falls - On Same Level	All Falls	Industry Rank	Estimated Number of Falls
113	Forestry and Logging	12.7	42.5	55.2	6	366
114	Fishing, Hunting and Trapping	0	0	0	81	0
115	Support Activities for Agriculture and Forestry	18.7	13	31.7	21	43
211	Oil and Gas Extraction	5.7	10.4	16.1	55	149
213111	Oil and Gas Well Drilling	8.2	15.8	24	38	205
221	Utilities	8.9	14.7	23.6	40	1,450
311	Food Manufacturing	8	21.5	29.5	24	4,303
312	Beverage and Tobacco Product Manufacturing	8.3	27.3	35.6	14	552
313	Textile Mills	2	9.4	11.4	68	214
314	Textile Product Mills	2	8.1	10.1	72	157
315	Apparel Manufacturing	1.2	6.4	7.6	77	164
316	Leather and Allied Product Manufacturing	0	14.9	14.9	59	58
321	Wood Product Manufacturing	8.7	15	23.7	39	1,366
322	Paper Manufacturing	4.1	9.7	13.8	62	609
323	Printing and Related Support Activities	2.3	11.2	13.5	64	865
324	Petroleum and Coal Products Manufacturing	5.8	7.7	13.5	65	139
325	Chemical Manufacturing	4.6	10.5	15.1	57	1,216
326	Plastics and Rubber Products Manufacturing	6	21.7	27.7	29	2,495
327	Nonmetallic Mineral Product Manufacturing	11.1	17.7	28.8	28	1,389
331	Primary Metal Manufacturing	7	15.2	22.2	42	999
332	Fabricated Metal Product Manufacturing	5.2	13.5	18.7	52	2,924
333	Machinery Manufacturing	4.1	9.3	13.4	66	1,510
334	Computer and Electronic Product Manufacturing	2.2	6.5	8.7	76	920

Table V-9, contd.
Injuries From Falls - General Industry, 2007
(Lost Work Day Cases per 10,000 Workers)

NAICS	NAICS Description	Falls - To Lower Level	Falls - On Same Level	All Falls	Industry Rank	Estimated Number of Falls
335	Electrical Equipment, Appliance, and Component Manufacturing	4.6	14.1	18.7	53	785
336	Transportation Equipment Manufacturing	5.3	13.7	19	48	3,083
337	Furniture and Related Product Manufacturing	4.1	10.2	14.3	61	777
339	Miscellaneous Manufacturing	4.4	10	14.4	60	988
423	Merchant Wholesalers, Durable Goods	9.7	9.2	18.9	50	6,483
424	Merchant Wholesalers, Nondurable Goods	12.5	18.3	30.8	22	6,985
425	Wholesale Electronic Markets and Agents and Brokers	5.2	4.5	9.7	73	323
441	Motor Vehicle and Parts Dealers	5.8	19.6	25.4	36	4,947
442	Furniture and Home Furnishings Stores	12.5	14.9	27.4	30	1,584
443	Electronics and Appliance Stores	N/A	N/A	N/A	N/A	N/A
444	Building Material and Garden Equipment and Supplies Dealers	10.2	17.1	27.3	31	3,730
445	Food and Beverage Stores	5.2	28.1	33.3	19	9,745
446	Health and Personal Care Stores	7.4	12.1	19.5	47	2,172
447	Gasoline Stations	4.7	26	30.7	23	2,804
448	Clothing and Clothing Accessories Stores	8.9	11.8	20.7	45	3,377
451	Sporting Goods, Hobby, Book, and Music Stores	5.4	13.4	18.8	51	1,199
452	General Merchandise Stores	8.6	28.3	36.9	11	10,341
453	Miscellaneous Store Retailers	7.7	21.2	28.9	27	2,427
454	Nonstore Retailers	10.7	46.8	57.5	4	3,000
481	Air Transportation	15.4	58.1	73.5	1	3,490
482	Railroads	25.9	3.3	29.2	25	642
483	Water Transportation	9.7	23.7	33.4	18	229
484	Truck Transportation	29.1	32.4	61.5	2	9,424
485	Transit and Ground Passenger Transportation	14.7	36.1	50.8	7	2,127
486	Pipeline Transportation	0	5.2	5.2	79	20
487	Scenic and Sightseeing Transportation	16.2	27.8	44	9	117
488	Support Activities for Transportation	12.3	21.7	34	17	1,971
492	Couriers and Messengers	17.7	37.9	55.6	5	3,177
493	Warehousing and Storage	8.7	25.7	34.4	16	2,048

Table V-9, contd.
Injuries From Falls - General Industry, 2007
(Lost Work Day Cases per 10,000 Workers)

NAICS	NAICS Description	Falls - To Lower Level	Falls - On Same Level	All Falls	Industry Rank	Estimated Number of Falls
511	Publishing Industries (except Internet)	4	9.6	13.6	63	1,414
512	Motion Picture and Sound Recording Industries	6.2	8.8	15	58	497
515	Broadcasting (except Internet)	5.9	13.1	19	49	574
516	Internet Publishing and Broadcasting	N/A	N/A	N/A	N/A	N/A
517	Telecommunications	10.2	16.8	27	33	3,137
518	Internet Service Providers, Web Search Portals, and Data Processing Services	1.9	8.7	10.6	70	493
519	Other Information Services	5	4.4	9.4	74	51
521	Monetary Authorities - Central Bank	0	0	0	82	0
522	Credit Intermediation and Related Activities	2.4	7.8	10.2	71	3,347
523	Securities, Commodity Contracts, and Other Financial Investments and Related Activities	0.9	1.6	2.5	80	235
524	Insurance Carriers and Related Activities	3.5	7.2	10.7	69	2,544
525	Funds, Trusts, and Other Financial Vehicles	0	8.8	8.8	75	23
531	Real Estate	10.5	18.5	29	26	4,505
532	Rental and Leasing Services	8.5	13.1	21.6	44	1,369
533	Lessors of Nonfinancial Intangible Assets (except Copyrighted Works)	14.2	7.7	21.9	43	65
541	Professional, Scientific, and Technical Services	2.1	3.5	5.6	78	4,510
551	Management of Companies and Enterprises	3.4	9.2	12.6	67	3,674
561	Administrative and Support Services	8.2	18.5	26.7	34	25,788
562	Waste Management and Remediation Services	20.2	26.3	46.5	8	1,606
611	Educational Services	5.9	14.3	20.2	46	6,019
621	Ambulatory Health Care Services	3.2	12.8	16	56	9,093
622	Hospitals	4.1	32.6	36.7	12	19,710
623	Nursing and Residential Care Facilities	5.8	53.2	59	3	17,659
624	Social Assistance	6.7	30	36.7	13	8,824
711	Performing Arts, Spectator Sports, and Related Industries	10	17.1	27.1	32	1,152
712	Museums, Historical Sites, and Similar Institutions	10.5	21.8	32.3	20	398

Table V-9, contd.
Injuries From Falls - General Industry, 2007
(Lost Work Day Cases per 10,000 Workers)

NAICS	NAICS Description	Falls - To Lower Level	Falls - On Same Level	All Falls	Industry Rank	Estimated Number of Falls
713	Amusement, Gambling, and Recreation Industries	6.2	28.7	34.9	15	4,975
721	Accommodation	8.6	31.2	39.8	10	7,485
722	Food Services and Drinking Places	3.2	19.9	23.1	41	687
811	Repair and Maintenance	10.8	13.9	24.7	37	3,229
812	Personal and Laundry Services	4.8	11.8	16.6	54	2,254
813	Religious, Grantmaking, Civic, Professional, and Similar Organizations	7.1	18.4	25.5	35	7,124

Source: U.S. Dept. of Labor, OSHA, Directorate of Evaluation and Analysis, Office of Regulatory Analysis, 2009, based on Bureau of Labor Statistics. Survey of Occupational Injuries and Illnesses: Case and Demographic Information, 2007.

Table V-10
Fall Incidents, by Type of Fall and Sector, 2007
(Lost Work Day Cases per 10,000 Workers)

Event Code	Type of Fall	Private Industry	Manu-facturing	Trade, Transport-ation, and Utilities	Inform-ation	Financial Activities	Profes-sional and Building Services	Education and Health Services	Leisure and Hospitality	Other Services
10	Fall, unspecified	0.4	0.4	0.5	0.2	0.2	0.2	0.6	0.3	0.2
11	Fall to lower level	8.1	5.2	10.3	6.3	4.3	4.8	4.7	4.7	7.8
110	Fall to lower level, unspecified	0.2	0.2	0.2	[b]	0.2	0.2	0.1	0.1	0.3
111	Fall down stairs or steps	2.0	1.4	1.7	2.1	1.9	1.7	2.8	2.2	2.5
112	Fall from floor, dock, or ground	0.6	0.3	0.9	0.5	[a]	0.3	0.1	0.2	1.5
1120	Fall from floor, dock, or ground level, unspecified	0.1	[a]	0.3	[b]	[b]	[a]	[b]	[b]	0.1
1121	Fall through existing floor opening	0.1	0.1	0.1	[b]	[b]	[a]	[a]	[a]	0.1
1122	Fall through floor surface	0.1	0.1	0.1	0.2	[a]	[a]	[b]	[a]	1.0
1123	Fall from loading dock	0.1	0.1	0.2	0.1	[b]	0.1	[b]	[b]	0.1
1124	Fall from ground level to lower level	0.1	[a]	0.1	0.1	[b]	0.2	[a]	0.1	0.1
1129	Fall from floor, dock, or ground level, n.e.c.	0.1	[a]	[a]	[b]	[b]	[a]	[a]	[b]	0.1
113	Fall from ladder	2.3	1.3	2.5	2.3	0.9	1.1	0.4	1.0	2.2
114	Fall from piled or stacked material	[a]	0.1	0.1	[b]	[b]	[b]	[b]	[b]	[b]

Table V-10, contd.
Fall Incidents, by Type of Fall and Sector, 2007
(Lost Work Day Cases per 10,000 Workers)

Event Code	Type of Fall	Private Industry	Manu-facturing	Trade, Transportation, and Utilities	Inform-ation	Financial Activities	Profes-sional and Building Services	Education and Health Services	Leisure and Hospitality	Other Services
115	Fall from roof	0.2	0.1	0.1	0.2	0.5	0.1	[b]	0.1	[b]
1150	Fall from roof, unspecified	0.1	[a]	[a]	0.2	[b]	0.1	[b]	[b]	[b]
1151	Fall through existing roof opening	[a]	[b]	[b]	[b]	[b]	[b]	[b]	[b]	[b]
1152	Fall through roof surface	[a]	[b]	[a]	[b]	[b]	[b]	[b]	[b]	[b]
1153	Fall through skylight	[a]	[a]	[b]	[b]	[b]	[b]	[b]	[b]	[b]
1154	Fall from roof edge	0.1	[a]	[b]	[b]	0.5	[b]	[b]	[a]	[b]
1159	Fall from roof, n.e.c.	[a]	[b]	[b]	[b]	[b]	[b]	[b]	[b]	[b]
116	Fall from scaffolding, staging	0.3	0.1	0.1	[b]	[a]	[a]	[b]	[a]	[b]
117	Fall from building girders or other structural steel	[a]	[a]	[a]	[b]	[b]	[a]	[b]	[b]	[b]
118	Fall from nonmoving vehicle	1.4	1.0	3.1	0.2	0.5	0.7	0.3	0.3	0.9
119	Fall to lower level, n.e.c.	1.1	0.8	1.6	0.9	0.4	0.6	1.0	0.9	0.4
12	Jump to lower level	0.5	0.4	0.6	0.4	[a]	0.6	0.1	0.2	0.4
120	Jump to lower level, unspecified	[a]	[a]	[a]	[b]	[b]	[b]	[b]	[b]	[b]
121	Jump from scaffold, platform, loading dock	0.1	0.1	[a]	0.1	[b]	0.2	[a]	[b]	[b]
122	Jump from structure, structural steel, n.e.c.	[a]	[a]	[a]	[b]	[b]	[a]	[b]	[a]	0.2
123	Jump from nonmoving vehicle	0.2	0.2	0.3	0.1	[b]	.1	[b]	[a]	0.2
129	Jump to lower level, n.e.c.	0.2	0.1	0.1	0.2	[a]	0.2	[a]	0.2	[b]
13	Fall on same level	17.6	13.3	21.0	11.9	9.2	9.8	27.2	22.6	14.6
130	Fall on same level,	0.2	0.1	0.1	0.3	0.2	0.2	0.2	0.1	0.1

Table V-10, contd.
Fall Incidents, by Type of Fall and Sector, 2007
(Lost Work Day Cases per 10,000 Workers)

Event Code	Type of Fall	Private Industry	Manu-facturing	Trade, Transportation, and Utilities	Inform-ation	Financial Activities	Profes-sional and Building Services	Education and Health Services	Leisure and Hospitality	Other Services
	unspecified									
131	Fall to floor, walkway, or other surface	15.0	10.9	17.6	10.6	7.9	8.5	25.0	20.5	12.0
132	Fall onto or against objects	2.8	2.1	3.1	1.0	1.1	1.1	1.8	2.0	2.4
139	Fall on same level, n.e.c.	0.2	0.2	0.2	[b]	0.1	0.1	0.3	0.1	0.1
19	Fall, n.e.c.	0.2	0.1	[a]	[b]	[b]	[a]	0.2	[a]	[b]
1	**All falls**	**26.7**	**19.5**	**32.4**	**18.8**	**13.8**	**15.4**	**32.8**	**27.9**	**23.0**

[a] Less than 0.1 cases per 10,000 workers

[b] Data not available

Source: U.S. Dept. of Labor, OSHA, Directorate of Evaluation and Analysis, Office of Regulatory Analysis, 2009, based on Bureau of Labor Statistics, Survey of Occupational Injuries and Illnesses: Case and Demographic Information, 2007.

BILLING CODE 4510–29–C

Among falls addressed by the proposed standards, the annual number of falls to a lower level resulting in a lost-workday injury ranges from 4.3 per 10,000 employees for the financial activities sector to 10.3 per 10,000 employees for the trade, transportation, and utility sector. Among specific types of falls to a lower level, falls from ladders represent 6.7 percent of all falls in manufacturing as reflected in an injury rate of 1.3 cases per 10,000 employees. Among other sectors, the injury rate from falls from ladders ranges from 0.4 per 10,000 employees in the education and health services sector to 2.5 per 10,000 employees in the trade, transportation, and utility sector.

In several sectors, falls down stairs or steps represent a major share of injuries from falls to a lower level. The proposed requirements for guardrails, handrails, and training would protect employees from these types of falls. Falls from floor holes, loading docks, roofs, and scaffolding are directly addressed by the proposed standard, but constitute much smaller shares of nonfatal fall accidents.

Fatalities and Injuries Prevented by the Proposed Subpart D and I Standards

Fatalities Prevented

OSHA's proposed standards for subparts D and I contain safety requirements designed to prevent, among other incidents, falls from ladders, scaffolds, unguarded floor holes, and unprotected platform edges. These types of falls are classified as "falls to lower level." "Falls on the same level" include slips and trips from floor obstructions or wet or slippery working surfaces. The proposal has relatively few new provisions addressing falls on the same level.

Combining the data in Tables V–6 and V–7 with other fatality data from BLS, Table V–11 shows the estimated number of annual fatalities from falls in general industry. Based on 2006 and 2007 data, OSHA calculated an average of 276 fatal falls per year. ERG allocated this total among the different fall categories based on overall fatal fall accident experience from 1992 to 2002 as derived from the BLS Census of Fatal Occupational Injuries and summarized in Table V–7. On this basis, an estimated 196 fatalities per year result from falls to lower level, while the remaining 80 fatalities result from falls on the same level or other types of falls.

In examining the costs of this proposal, ERG found, after reviewing inspection results, that employers are generally in compliance with existing standards that have been in place for over 30 years (*see* Table V–15). However, this general compliance does not necessarily mean that existing fall fatalities are not preventable by the existing standard. For example, it could be the case that employers comply with a standard 99.9 percent of the time, but that all fatalities are the result of the 0.1 percent of the time employers are not in compliance. Thus, it is possible for there to be a high level of compliance with a standard, but for all fatalities, nevertheless, to be the result of non-compliance with that standard.

TABLE V–11—FATALITIES POTENTIALLY PREVENTED AS A RESULT OF COMPLIANCE WITH THE PROPOSED STANDARD FOR SUBPARTS D AND I

Falls by type	Distribution of fatal falls by type	Estimated annual number of fatal falls by type		Incremental preventability of the proposed standard		Annual fatalities potentially prevented by the proposed standard (a)
Fall to lower level	100.0%	196				
Fall down stairs or steps	4.2%		8	Low	5.0%	0.4
Fall from floor, dock, or ground level	5.1%		10	High	10.0%	1.0
Fall from ladder	18.6%		36	High	15.0%	5.5
Fall from piled or stacked material	0.1%		0	High	10.0%	0
Fall from roof	8.9%		17	High	15.0%	2.6
Fall from scaffold, staging	8.6%		17	Very High	40.0%	6.7
Fall from building girders or other structural steel.	0.8%		2	High	10.0%	0.2
Fall from nonmoving vehicle	15.8%		31	No	0.0%	0
Fall to lower level, n.e.c.	23.1%		45	Uncertain	2.5%	1.1
Fall to lower level, unspecified	14.6%		29	Uncertain	2.5%	0.7
Fall from ship, boat, n.e.c.		27		Low	5.0%	1.4
Other falls		8		Very Low	0.0%	0
Totals		230	196			20.0

Due to rounding, figures may not sum to totals shown.
(a) Prevented fatalities were calculated as the product of annual fatal falls and incremental preventability rate, by type.
Source: U.S. Dept. of Labor, OSHA, Office of Regulatory Analysis, 2009, based on ERG, 2007; OSHA IMIS, 1995–2001; and Bureau of Labor Statistics, Census of Fatal Occupational Injuries, 1992–2007.

For the purposes of this analysis, OSHA did not attempt a quantitative analysis of how many fatal falls could be prevented by full and complete compliance with the existing standard. However, a qualitative examination of the fatal falls to a lower level shows that a majority, and perhaps a large majority, could be prevented by full compliance with the existing regulations. For this analysis, OSHA and ERG have taken the approach that, for current levels of enforcement, existing fall fatality rates can be used as a baseline from which to measure the impacts of the proposal in reducing falls. This is because the existing fall fatality rate reasonably represents what is preventable with the existing rules and the existing degree of enforcement and compliance with these rules.

A comparison of the proposed and existing standards shows that the new provisions largely concern training and inspections, rather than requirements for additional or more stringent engineering or work practice controls (*see* section F below in this PEA). In addition, the new standard serves to

simplify and clarify the existing standard and bring the existing standard into conformance with various voluntary standards. The benefits in terms of reductions in fatal falls can be expected to come in the form of the effects of increased training, inspections, and certifications in preventing falls, many of which are preventable by existing regulations which are not being fully followed. OSHA believes that the proposed requirements for training, inspections, and certifications can serve to improve safety and also compliance with existing requirements.

OSHA based its analysis of accident preventability on ERG's professional judgment and two published studies. The studies show that well-designed training programs are an effective means of improving workplace safety. A NIOSH review of the literature concerning the benefits of training reported that the studies were nearly unanimous in showing that improved and expanded training increases hazard awareness and promotes the adoption of safe work practices. However, the quantitative relationship between increased training and reduced accident rates remains uncertain (Cohen and Colligan, 1988, Ex. 7); analysis of past OSHA experience shows that requiring training programs does not lead to preventing the majority of accidents addressed by the training (Seong and Mendeloff, 2004, Ex. 8). For this reason, ERG concluded that the incremental benefits from the proposed standards would be modest (ERG, 2007, Ex. 6).

ERG estimated the number of fatal falls that would be prevented through compliance with the proposed standards, categorized by type of fall. Since proposed subpart D focuses heavily on ladder safety, ERG estimated the highest preventability impact—15 percent—for falls from ladders. For other types of falls directly addressed in the proposal (*e.g.,* falls from floor or dock), ERG estimated a moderately high preventability impact of 10 percent. For types of falls less directly or comprehensively addressed in the proposal (*e.g.,* falls down stairs or steps), ERG estimated a relatively low preventability impact (5 percent). Several classes of falls are not specifically defined by the BLS injury survey, and for these, ERG estimated a low level of preventability (2.5 percent). (*See* ERG, 2007, Ex. 6, p. 4–10 to 4–14.)

For falls from roofs, ERG assigned a preventability rate of 10 percent. OSHA believes that compliance with the provisions in proposed subpart D addressing safety systems, work practices, and training associated with the fall hazards encountered on roof surfaces—including the requirements referenced in consensus standards such as ANSI/ASSE A1264.1–2007, Safety Requirements for Workplace Walking/Working Surfaces and Their Access; Workplace, Floor, Wall and Roof Openings; Stairs and Guardrail Systems—will yield a preventability rate comparable to that estimated for ladders: 15 percent. Therefore, in this preliminary analysis of benefits, OSHA has applied a preventability rate of 15 percent to roof accidents.

For falls from scaffolds or staging, ERG assigned a preventability rate of 10 percent. In light of the substantial strengthening of the fall protection requirements for rope descent systems (RDS), specified in proposed paragraph 1910.27(b), OSHA believes that a preventability rate much higher than 10 percent can be applied to scaffold accidents. Because, according to OSHA and BLS accident data, approximately 40 percent of lost-workday scaffold accidents involve rope descent systems, and due to the proposed standard's comprehensive approach to RDS fall protection, OSHA estimates that at least 40 percent of deaths and injuries associated with scaffolds (including non-RDS scaffolds) will be prevented by the proposed standard. OSHA's rationale for assigning this preventability rate to scaffolds is discussed immediately below. All of the fall preventability factors are presented in Table V–11.

As shown in Table V–11, falls from scaffolds or staging are one of the leading types of fall categories in general industry. According to the Bureau of Labor Statistics, falls from scaffolds or staging caused an annual average of 18 deaths and 1,474 lost-workday injuries over a recent eleven-year period (1992–2002). OSHA reviewed a subset of scaffold accidents recorded in the Agency's Integrated Management Information System (IMIS) inspection database to expand ERG's analysis of the extent to which the proposed standard would prevent accidents involving commercial window washing, and to gain more general insights into the preventability of fatal falls (OSHA, 2009).

OSHA reviewed 36 incidents (some involving multiple casualties) that occurred during the period January 1995 to October 2001 (5 years and 10 months), where workers in general industry were either injured or killed from a fall from an elevated scaffold or a similar surface during commercial window washing operations. OSHA's analysis is presented in Table V–12. In reviewing each incident description, OSHA evaluated the probability that the incident would have been prevented by one of the following:

1. The existing standard for walking-working surfaces;

2. ANSI/IWCA I–14.1, Window Cleaning Safety Standard, an earlier version of which is referenced in a 1991 OSHA memorandum to regional administrators on the use of descent control devices (rope descent systems) by employees performing building exterior cleaning, inspection, and maintenance (OSHA, 1991a); or

3. The proposed standard.

Table V–12, below, summarizes OSHA's analysis of IMIS window cleaning accidents. Of the 36 window washing incidents in the database, 21 incidents were caused by a malfunction in, or unsafe use of, rope descent systems (including lifelines). Because the existing standard for walking-working surfaces lacks provisions that directly address rope descent systems (RDS), OSHA believes that none of the RDS incidents would have been prevented by full compliance with the current rule.

TABLE V–12—FALL INCIDENTS ASSOCIATED WITH THE USE OF SCAFFOLDS DURING WINDOW CLEANING

[OSHA IMIS, 1995–2001]

Cause of incident	Incidents potentially preventable by:		
	Existing standard	OSHA 1991 memo	Proposed standard
Malfunction/Mishandling of Rope Descent System or Lifelines	N/A	19	21
Anchorage Failure	N/A	7	8
Inadequate Training	N/A	12	14

TABLE V–12—FALL INCIDENTS ASSOCIATED WITH THE USE OF SCAFFOLDS DURING WINDOW CLEANING—Continued

[OSHA IMIS, 1995–2001]

Cause of incident	Incidents potentially preventable by:		
	Existing standard	OSHA 1991 memo	Proposed standard
Other Factors (suspension scaffold hardware, manlift, powered platform, roof top equipment, safety belt)	4	N/A	6

*N = 36. Some incidents are assigned to more than one category.
Source: U.S. Dept. of Labor, OSHA, Directorate of Standards and Guidance, and Office of Regulatory Analysis, 2009.

Of the 21 RDS incidents in the database, in OSHA's judgment, 19 of them would have been prevented if the employer had adhered to the safety recommendations specified in OSHA's 1991 window cleaning memorandum, which in turn refers to an existing consensus standard. The remaining two RDS incidents, in OSHA's estimation, would not be prevented by the current OSHA standard and the existing consensus standards, but would be prevented by the proposed standard (in addition to the other 19 RDS incidents prevented by the proposed standard).

One of the primary causes of accidents in commercial window washing is the failure of the rooftop anchorage to support the suspended scaffold. The proposed standard requires that employers use proper rigging, including sound anchorages and tiebacks, when rope descent systems are used. OSHA identified eight incidents in the IMIS database where anchorage failure contributed to the accident. In OSHA's judgment, all eight anchorage-related incidents involved factors that are addressed by the proposed standard and therefore are potentially preventable. All but one of these eight incidents involved factors addressed by the 1991 memo.

As noted earlier in this section, when workers are adequately trained—for example in the proper use of harnesses and lifelines—accidents are less likely to occur. OSHA identified fourteen incidents in the IMIS database where, if workers had applied the lessons provided in the kind of training prescribed in the proposed standard, death or injury to the worker might have been prevented. Of these fourteen cases, twelve involved factors that are addressed by the 1991 memo.

Other factors that led to a fall from elevation, such as equipment failure involving suspension scaffolds and powered platforms, contributed to the death or injury of workers during window washing operations. These incidents are recognized in the fourth row of Table V–12.

OSHA believes that this analysis illustrates some of the complexities in assigning benefits to this standard. Chief among these complexities is the argument that full compliance with the proposed standard will prevent fatalities not preventable by the existing standard due to the proposed addition of major provisions addressing window washing.

Secondly, there is the question of the proper baseline for such an analysis. OSHA may not have any rule addressing RDS systems or anchorages for these and other suspended scaffolds, but there are consensus standards and OSHA enforcement policies that apply OSHA's general duty clause when existing standards may not apply. The changes from a baseline of current enforcement practice are much more marginal than if no standards or enforcement initiatives existed for a particular hazard. Nevertheless, a simple comparative prevention table of this kind may not capture the difference between occasional enforcement using the general duty clause and consensus standards, and enforcement of an actual standard. Adopting the additional protections afforded by consensus standards and materials referenced in general duty citations into a standard make the information more available, assures that everyone affected can readily consult the relevant rules, and simplifies enforcement. These are desirable ends even if no additional fatalities are prevented, and probably would serve to prevent some current fatalities and injuries.

Thirdly, there is the issue, already discussed above, of how to treat the benefits of training requirements. OSHA normally assumes for the purposes of both benefit and cost analysis, that there is full compliance with a rule. For some kinds of rules, it can readily be determined if full compliance with the rule would have prevented an accident. However, for training rules, it is not at all obvious that full compliance—assuming training is given—will prevent accidents that the training is designed to address (Seong and Mendeloff, 2004). OSHA has made a relatively low estimate of the effects of such training requirements in Table V–11. The approach used in Table V–12 suggests that a much higher estimate might be made if employees are assumed to act as they have been trained to act.

Finally, the proposed standard inevitably builds, for the most part, on an existing framework. The existing framework, if fully followed, would prevent many accidents. While the new regulation adds new kinds of provisions, it also tries to improve compliance with the existing regulation in a variety of ways. Ways in which it may improve compliance include additional training; additional certification; bringing into the regulatory framework materials and ideas from consensus standards; and codifying existing enforcement practice. Steps of this kind have a variety of desirable, though difficult-to-quantify effects.

Based on ERG's estimates, and applying the preventability rate for scaffolds as explained above, OSHA concluded that the proposed standards would prevent 20 fall fatalities a year, or approximately 9 percent of the fatal falls in general industry that would be addressed by the proposed standard. OSHA believes that this is a conservative estimate, in that the training and work practices specified in this proposal would likely improve the use and application of safety equipment (including personal fall protection equipment), thereby further reducing fatalities and injuries.

OSHA requests comment on the Agency's analysis of scaffold accidents described above and on the various approaches to measuring potential benefits achievable from compliance with the proposed standard in addition to those described in Tables V–11, V–12 (above), and V–13 (below).

Injuries Prevented

For the purposes of estimating the number of lost workday injuries that might be prevented by the proposed standards, OSHA used the same preventability factors for the proposal as

for fatal falls, and applied them to lost workday injuries involving falls. Table V–13 shows, by type of fall, the distribution of lost-workday injuries for general industry; these injury categories were presented earlier in this section in Table V–8. The BLS data show that, for non-fatal falls to a lower level, 30.4 percent of injuries are due to falls down stairs or steps, while 22.4 percent are the result of falls from ladders. Applying these and other fall injury rates (*see* Table V–10) to the estimates of total employment within affected sectors in general industry (*see* Table V–1), OSHA estimates that, on average, 63,028 lost-workday fall injuries occur each year for work operations directly affected by the proposed revisions to subparts D and I. Using the same preventability estimates that were applied to fatal incidents, OSHA estimates that 3,706 lost-workday fall injuries would be prevented annually through compliance with the proposed revisions to subparts D and I.

TABLE V–13—NONFATAL LOST-WORKDAY INJURIES POTENTIALLY PREVENTED AS A RESULT OF COMPLIANCE WITH THE PROPOSED STANDARD FOR SUBPARTS D AND I

Falls by type	Distribution of falls resulting in lost workdays, by type	Estimated annual number of nonfatal falls, by type	Incremental preventability of the proposed standard	Annual nonfatal injuries potentially prevented by the proposed standard (a)	
Fall to lower level	100.0%	55,716			
Fall down stairs or steps	30.4%	16,916	Low	5.0%	846
Fall from floor, dock, or ground level	7.0%	3,878	High	10.0%	388
Fall from ladder	22.4%	12,472	High	15.0%	1,871
Fall from piled or stacked material	0.5%	283	High	10.0%	28
Fall from roof	1.7%	959	High	15.0%	144
Fall from scaffold, staging	0.8%	434	Very High	40.0%	174
Fall from building girders or other structural steel.	0.2%	131	High	10.0%	13
Fall from nonmoving vehicle	19.8%	11,018	No	0.0%	0
Fall to lower level, n.e.c.	15.1%	8,433	Uncertain	2.5%	211
Fall to lower level, unspecified	2.1%	1,192	Uncertain	2.5%	30
Fall from ship, boat, n.e.c.		30	Low	5.0%	2
Other falls		7,281	Very Low	0.0%	0
Totals		63,028 55,716			3,706

Due to rounding, figures may not sum to totals shown.
(a) Prevented injuries were calculated as the product of annual nonfatal falls and incremental preventability rate, by type.
Source: U.S. Dept. of Labor, OSHA, Office of Regulatory Analysis, 2009, based on ERG, 2007; OSHA IMIS, 1995–2001; and Bureau of Labor Statistics, Survey of Occupational Injuries and Illnesses: Case and Demographic Information, 2007.

Monetized Benefits, Net Benefits, and Cost Effectiveness

The previous section showed that OSHA estimates that compliance with the proposed standards will prevent 20 deaths and 3,706 lost workday injuries each year. Consistent with other regulatory analyses recently issued by OSHA, the Agency has assigned a dollar value to these safety benefits.

In estimating the value of preventing a fatality, OSHA has followed the approach established by the U.S. Environmental Protection Agency (EPA). EPA's *Guidelines for Preparing Economic Analyses* provides a detailed review of the methods for estimating mortality risk values and summarizes the values obtained in the literature (EPA, 2000). Synthesizing the results from 26 relevant studies, EPA arrived at a mean value of a statistical life (VSL) of $4.8 million (in 1990 dollars). EPA recommends this central estimate, updated for inflation (the value is $7.2 million in 2008 dollars), for application in regulatory analyses. This VSL estimate is also within the range of the substantial majority of such estimates in the literature ($1 million to $10 million per statistical life), as discussed in OMB Circular A–4 (OMB, 2003). Applying a VSL of $7.2 million to the estimated number of prevented fatalities, OSHA estimates that the dollar value of the benefits from compliance with proposed subparts D and I will be $144 million annually.

OSHA also reviewed the available research literature regarding the dollar value of preventing an injury. Kip Viscusi and Joseph Aldy conducted a critical review of 39 studies estimating the value of a statistical injury (Viscusi and Aldy, 2003, Ex. 9). In their paper, Viscusi and Aldy reviewed the available willingness to pay (WTP) literature to identify a suitable range of estimates; using WTP to value non-fatal injuries is the approach recommended in OMB Circular A–4.

Viscusi and Aldy found that most studies resulted in estimates in the range of $20,000 to $70,000 per injury, although several studies resulted in even higher estimates. This range of values is partly explained by the fact that some studies used an overall injury rate, and others used only injuries resulting in lost workdays. The injuries that would be prevented by these proposed standards often involve hospitalization and, therefore, are likely to be more severe than the majority of lost workday injuries. In addition, injuries resulting from falls involve more pain and suffering, more expensive treatments, and generally longer recovery periods than other lost workday injuries.[17]

Thus, it is reasonable to believe that the value of a statistical injury for this rulemaking will be in the upper part of the reported range of estimates. Nevertheless, OSHA has conservatively used a mid-range estimate—$50,000—to assess monetized benefits for this preliminary analysis. Thus, with 3,706 injuries a year potentially prevented by the proposed standards, OSHA estimates that the dollar value of prevented injuries through compliance

[17] In 2007, the median number of days away from work was 15 days for falls to a lower level, whereas the median number of days away from work for all events or exposures leading to injury or illness was 7 days (BLS, 2009).

with proposed subparts D and I will total $185.3 million annually.

OSHA estimates that the combined dollar value of prevented fatalities and injuries through compliance with the proposed revisions to subparts D and I will total $328.5 million per year. Comparing gross monetized benefits with costs of compliance, OSHA estimates that the net monetized benefits of the proposed standards will be $155.4 million, after rounding ($328.5 million in benefits—$173.2 million in costs). OSHA notes that these net benefits exclude any unquantified benefits associated with revising the standards to provide updated, clear, and consistent requirements. OSHA requests comments from the public regarding these figures and any benefits estimates presented in this section. Table V–14 summarizes the costs, benefits, net benefits, and cost effectiveness of the proposed standard.

There are other benefits of the proposal that OSHA has neither quantified nor monetized. First, OSHA has not attempted to estimate the number of fall injuries prevented that do not result in lost workdays. Second, OSHA has not attempted to estimate the improvements in efficiency of compliance associated with clarifying the existing rule and bringing it into closer correspondence with current voluntary standards.

TABLE V–14—NET BENEFITS AND COST EFFECTIVENESS OF THE PROPOSED REVISION TO OSHA'S WALKING-WORKING STANDARDS

Annualized Costs	
§ 1910.22 General Requirements	$15.7 million.
§ 1910.23 Ladders	$9.7 million.
§ 1910.24 Step Bolts and Manhole Steps	$3.7 million.
§ 1910.27 Scaffolds	$73.0 million.
§ 1910.28 Duty to Have Fall Protection	$0.09 million.
§ 1910.29 Fall Protection Systems Criteria and Practices	$8.4 million.
§ 1910.30 Training Requirements	$44.1 million.
§ 1910.140 Fall Protection	$18.5 million.
Total Annual Costs	$173.2 million.
Annual Benefits	
Number of Injuries Prevented	3,706.
Number of Fatalities Prevented	20.
Monetized Benefits (assuming $50,000 per injury and $7.2 million per fatality prevented)	$328.5 million.
OSHA standards that are updated and consistent with voluntary standards	Unquantified.
Net Benefits (benefits minus costs)	$155.4 million.
Cost Effectiveness: Compliance with the proposed standards would result in the prevention of 1 fatality and 231 injuries for every $10 million in costs, or alternatively, $1.90 in benefits per dollar of costs.	

Source: U.S. Dept. of Labor, OSHA, Directorate of Evaluation and Analysis, Office of Regulatory Analysis, 2009.

Sensitivity of Estimates

OSHA's benefits estimates are most sensitive when it comes to estimating the percentage of current injuries and fatalities that can be avoided by full compliance with the proposed standard. OSHA closely examined available reports of fatalities related to the provisions in the existing and proposed standards and found that 20 fatalities, or approximately 9 percent of fall fatalities, would be prevented if employers comply with the measures in the proposal. The true benefits of the proposal depend on how well the cases reviewed represent actual fall-related fatalities in general industry.

The Agency believes that its estimate of annual fatalities involving slips, trips, and falls (about 230) in general industry is much less sensitive than the estimate of the percentage of fatalities avoided, because the estimate of the annual number of baseline fatalities is derived from 2 years of recent accident data with averages corroborated by 11 prior years of data. Furthermore, as noted earlier, OSHA believes that its benefits estimates are conservatively low. Accordingly, training and work practices specified in this proposal would likely improve the use and application of safety equipment (including personal fall protection equipment), thereby further reducing fatalities and injuries.

In addition to estimating annualized costs using a discount rate of seven percent, OSHA, for sensitivity purposes, applied an alternative discount rate of three percent to up-front costs. Under the alternative scenario of a three-percent discount rate, OSHA estimates that annualized costs would decline from $173.2 million to $168.8 million. For both this scenario and for the primary (seven-percent rate) scenario, OSHA assumed that all costs (first-year and recurring) will be incurred upon implementation of the final standard (*i.e.,* there are no phase-in provisions). OSHA is also assuming that the benefits outlined in this section will accrue once the rule takes effect.

According to the Agency's models for estimating costs and monetized benefits, the proposed standard generates considerable positive net benefits; that is, expected benefits are much greater than expected costs. Only significant errors in OSHA's analysis would bring true net benefits to or below zero. For net benefits to fall to zero, for example, the Agency would have had to underestimate the number of buildings with anchorages subject to inspection and certification by two-fold (from about 750,000 buildings to 1.5 million buildings), and would also have had to underestimate the number of employees who would require training by three-fold (from 363,000 to 1.09 million). In that case, estimated compliance costs would rise to roughly $334 million annually, or about equal to the value of estimated monetary benefits. Alternatively, true net benefits would decline to zero if, for example, the Agency has overestimated injuries prevented by the standard by at least a factor of five or more (actual prevented

injuries are approximately 599, down from 3,706 as estimated in this PEA).

E. Technological Feasibility

Based on the substantial evidence collected throughout the history of this rulemaking, including the data and comments submitted to the record in response to the earlier proposed standard published on April 10, 1990, and the notice of re-opening of the record on May 2, 2003, OSHA has determined that compliance with the proposed revisions to subparts D, I, and other subparts in part 1910 (general industry), as described in this proposed rule, is technologically feasible. The details of this conclusion with regard to specific requirements are presented in this subsection.

General Requirements (§ 1910.22)

Section 1910.22 of proposed subpart D revises existing requirements addressing housekeeping, safe aisles and passageways, covers and guardrails, and floor loading protection, and introduces new requirements associated with broad areas of safety on walking-working surfaces. Proposed paragraphs (a), (b), (c), and (d) address, respectively, surface conditions, application of loads, access and egress, and maintenance and repair.

Proposed paragraph (a) requires that all walking-working surfaces be designed, constructed, and maintained free of hazards that can result in death or serious injury to employees. Data in OSHA's inspection file analyzed by ERG (ERG, 2007, Ex. 6) indicate a high level of compliance with similar requirements in existing subpart D, suggesting that there have been few if any technical challenges to employers; therefore, this provision is technologically feasible.

Proposed paragraph § 1910.22(b) requires that all walking-working surfaces be designed, constructed, and maintained to support their maximum intended load and that the maximum intended load not be exceeded when employees use that surface. This language restates and simplifies the current regulatory, text and should not present any technological feasibility difficulties.

Proposed paragraph § 1910.22(c) requires that employers ensure that employees can safely move from one surface to another. Although new, this requirement will, in OSHA's judgment, not impose any duties on employers beyond the limits of feasibility.

Proposed paragraph § 1910.22(d) requires that all walking and working surfaces be regularly inspected, maintained, and repaired by, or under the supervision of, qualified persons (as defined by the proposed standard), and that all hazardous conditions be corrected, repaired, or guarded to prevent employee use until repairs are made. The inspection, maintenance, repair, and guarding of surfaces can be accomplished with technologically feasible and currently available methods.

Ladders (§ 1910.23)

Proposed section 1910.23 covers ladders. Proposed § 1910.23(a) specifies that the section applies to all ladders except for ladders that are used only for firefighting or rescue operations and ladders that are designed into a machine or piece of equipment. Proposed § 1910.23(b) provides general requirements for all ladders; proposed paragraph (c) addresses portable ladders; proposed paragraph (d) presents standards for fixed ladders; and proposed paragraph (e) addresses mobile ladder stands and mobile ladder stand platforms. The requirements in this proposed section are partly based on current American National Standards Institute (ANSI) standards, designated A14 series. The ANSI standards provide guidelines for industry and are generally compatible with current industry practices and technology. Since virtually all manufactured ladders are already made and tested to meet the ANSI standards, OSHA anticipates few problems regarding technological feasibility.

Most of the requirements for ladders in the proposed revision to subpart D do not represent any change from existing OSHA requirements. For both current and new requirements, existing and readily available technology is capable of meeting or exceeding the design and strength criteria specified for ladders. The proposed language is intended to be clearer and more concise than the current regulatory text. Moreover, greater compliance flexibility has been introduced into the standard, such as in the case of the range provided in the spacing requirements for rungs, cleats, and steps (*see* proposed § 1910.23(b)).

Comments submitted to the docket in response to the 1990 proposed rule generally confirmed OSHA's preliminary conclusion that compliance with the proposed requirements for ladders would be technologically feasible. Although several commenters addressed the appropriateness or the costs associated with the proposed ladder requirements, the technological feasibility of the requirements was not questioned.

Training in the proper care, use, and inspection of ladders is grouped with other training requirements under proposed § 1910.30. Compliance with these proposed training requirements does not require any additional or new technology.

Step Bolts and Manhole Steps (§ 1910.24)

Provisions in revised subpart D for step bolts and manhole steps provide basic criteria for the safe design, construction, and use of these components. For example, proposed § 1910.24(a)(2) specifies that step bolts must be spaced uniformly, between 12 inches (30 cm) and 18 inches (46 cm) center to center, while proposed § 1910.24(b)(2)(iv) would require that manhole steps be spaced uniformly, not more than 16 inches (41 cm) apart. Although these proposed requirements would be new to subpart D, the engineering criteria are based on consensus standards established by the American Society for Testing and Materials (ASTM), which have been widely adopted throughout industry. Therefore, OSHA believes that existing technology is capable of meeting these performance criteria and can be feasibly applied.

Stairways (§ 1910.25)

Proposed § 1910.25 describes OSHA safety specifications for stairs, and covers all types except stairs serving floating roof tanks; stairs on scaffolds; stairs designed into machines or pieces of equipment; and stairs on mechanized mobile equipment. Requirements in this proposed section address the obligations to install handrails, stair rail systems, and guardrail systems, as necessary. Other requirements in this proposed section describe design specifications such as the appropriate load capacities that stairs must be able to support, minimum vertical clearances for different types of stairs, the height of risers, the depth of treads, and the proper angle of stairs. These proposed requirements are not substantially different from those of the existing standard, are drawn from NFPA and ANSI consensus codes, and can be feasibly incorporated into industry practice with existing technology.

Dockboards—Bridge Plates (§ 1910.26)

Proposed § 1910.26 provides for the safe movement of personnel and equipment on dockboards and bridge plates, and would relocate, update, and clarify requirements for dockboards located in existing § 1910.30, Other working surfaces. These surfaces must be designed, constructed, and maintained to support their maximum intended load and prevent equipment

from running off the edge. According to proposed paragraph § 1910.26(c), portable dockboards must be secured with anchors or other means, where feasible, to prevent displacement while in use. Other requirements in this proposed section prevent the sudden displacement of vehicles on dockboards that are in use, and direct the provision of handholds or other means for safe handling. Compliance with the revised requirements for dockboards and bridge plates do not necessitate the use of any new technologies, materials, or production methods, and is thus technologically feasible.

Scaffolds and Rope Descent Systems (§ 1910.27)

Proposed § 1910.27 would introduce to subpart D the current requirements for scaffolds in the construction standards. Thus, for revised subpart D, OSHA proposes to directly reference subpart L in part 1926. In addition, new requirements for rope descent systems would ensure daily inspection; proper rigging; the provision of a separate personal fall arrest system; minimum strength criteria for lines used to handle loads; establishment of rescue procedures; effective padding of ropes; and stabilization for descents greater than 130 feet. Although new to subpart D, these and other specifications for the safe use of scaffolds have been recognized throughout industry for many years, owing to the publication of ANSI I–14.1–2001, Window Cleaning Safety (Ex. 10), and a March 12, 1991, OSHA memorandum to Regional Administrators addressing the ANSI standard and the provisions listed above (Ex. OSHA–S029–2006–0662–0019). Therefore, OSHA judges the requirements in this new section on scaffolds to be technologically feasible.

Duty To Have Fall Protection (§ 1910.28)

Proposed § 1910.28 restates, clarifies, and adds flexibility and consistency to existing OSHA requirements for providing fall protection to employees. In addition to general requirements for the strength and structural integrity of walking-working surfaces, this proposed section also includes detailed specifications on the following surfaces for which employers have a duty to provide fall protection:

- Unprotected sides and edges;
- Holes;
- Dockboards (bridge plates);
- Runways and similar walkways;
- Dangerous equipment;
- Wall openings;
- Repair, service, and assembly pits four to ten feet in depth;
- Fixed ladders;
- Outdoor advertising structures (billboards);
- Stairways;
- Scaffolds and rope descent systems; and
- Walking-working surfaces not otherwise addressed.

Hazards on walking-working surfaces can include the accidental displacement of materials and equipment. To prevent objects from falling to lower levels and to protect employees from the hazards of falling objects, proposed § 1910.28(c) provides for head protection, screens, toeboards, canopy structures, barricades, and other measures.

The revised subpart D standard reaffirms the existing Agency interpretation and enforcement practice that fall protection is generally required for fall hazards associated with unprotected sides or edges of any surface presenting a fall hazard of four feet or more. In this regard, the obligation of employers to provide fall protection has not substantially changed through the revision of subpart D.

Whereas the existing requirements specify that employees must be protected by installing standard guardrail systems or equivalent systems, the revised standard more clearly allows employers to provide fall protection through any of several methods, including guardrails, personal fall arrest systems, and safety nets. OSHA recognizes that some work surfaces may present difficult challenges when fall protection must be applied. One commenter (Ex. OSHA–S041–2006–0666–0194) pointed out that maintenance work may sometimes require that employees be located on equipment such as compressors, turbines, or pipe racks at elevations in the range of four to ten feet above lower surfaces, and that guardrails, platforms, ladders, or tying off would not always be possible in such situations. OSHA notes that its enforcement procedures allow special consideration in unique circumstances when compliance with a particular standard may not be feasible or appropriate.[18]

In general, with few exceptions, employers should be able to address and eliminate employee exposures to potential slip, trip, and fall hazards by planning and designing facilities and work procedures in anticipation of providing employees with adequate protection from those hazards. Based on widespread baseline industry practice, the proposed fall protection requirements are, in OSHA's estimation, technologically feasible.

Fall Protection Systems Criteria and Practices (§ 1910.29); Training Requirements (§ 1910.30); General Requirements [for Personal Protective Equipment]; Hazard Assessment and Training (§ 1910.132); and Personal Fall Protection Systems

Fall Protection Criteria (§ 1910.140)

In proposed § 1910.29, OSHA specifies or provides references for revised criteria for fall protection systems such as guardrail systems, handrails, stair rail systems, toeboards, designated areas, restraint line systems, and safety net systems. Criteria for personal fall protection systems are provided in proposed § 1910.140, a new section that would be added to current subpart I.

With regard to guardrail systems, the revised subpart D standard does not substantially modify existing requirements involving height, strength, or other criteria. Some guardrails in violation of existing standards are granted an exception under the revised standard, and in some circumstances for which the existing standard requires guardrails (or equivalent protection), the revised standard allows the alternative of using designated areas.

Rather than explicitly mandating the use of a midrail in the design of a guardrail system as in the existing subpart D standard, the revised subpart D standard uses performance-oriented criteria that allow midrails, screens, mesh, intermediate vertical members, or equivalent intermediate structural members. Compliance with the existing standard would generally also meet the requirements of the revised standard. Furthermore, the revised standard allows the employer to choose any of a wide variety of currently used and readily available guardrail system materials and designs to meet the performance-oriented criteria. Based on these considerations, revisions to the existing subpart D requirements for guardrail systems do not involve any technological feasibility constraints.

Proposed paragraph § 1910.29(c) would reference the construction standards to specify criteria for safety net systems. The criteria for safety nets established through this proposed rulemaking would include requirements for drop tests and inspections for each safety net installation. Other criteria for safety nets established through provisions of the revised subpart D involve design and strength standards. All of these criteria are currently achieved by existing and commonly

[18] See OSHA's Field Operation Manual: *https://www.osha.gov/OshDoc/Directive_pdf/CPL_02–00–148.pdf.*

available safety net systems. The revised requirements for the installation of safety net systems reflect basic safety considerations that have been adopted by manufacturers of equipment and by employers. Readily available and currently used technology is capable of meeting these proposed requirements.

The revised subpart D standard introduces the concept of designated areas (proposed § 1910.29(d)) as a means of fall protection available to employers as an option in addition to other acceptable fall protection measures in certain circumstances. The technology necessary to implement this option consists of basic materials such as rope, wire, or chain, and supporting stanchions. The criteria specified in the revised standard for designated areas such as for strength, height, and visibility are capable of being achieved with currently available materials and technology.

Requirements for covers for holes in floors, roofs, and other walking-working surfaces in the revised standard for fall protection systems (*see* proposed § 1910.29 (e)) are similar to those in the existing subpart D standard, with the exception of new provisions for visible warnings and measures to prevent accidental displacement. The performance-oriented criteria applicable to covers allow a wide variety of technological solutions to be applied.

Requirements in revised subpart D for handrail and stair rail systems (§ 1910.30(f)) specify criteria for height, strength, finger clearance, and type of surface, among others. These criteria are currently being met with existing technology, and a wide variety of different materials and designs are available to comply with the requirements.

Proposed § 1910.29 contains design and strength criteria for grab handles, cages, and wells. For the most part, these proposed standards update and provide greater flexibility to existing requirements in subpart D. A lone exception, a new requirement that landing platforms for cages and wells have the same strength as ladders, would not be expected to create feasibility concerns considering the availability of appropriate materials and engineering expertise.

Proposed new language for subpart D would clearly specify criteria for systems that provide falling object protection. The provisions addressing toeboards in the existing requirements have been re-written in more flexible and concise language, while other requirements for guardrail systems and canopies specified in the proposed design criteria are within current engineering norms. Therefore, no feasibility difficulties would be expected for the technology applied to falling object protection.

Finally, the proposed standard would include requirements for qualifying employees to climb ladders on outdoor advertising. Although new to subpart D, the concept of qualified climbers and the training and other administrative controls that characterize the development and protection of these climbers, have existed for many years. OSHA anticipates few if any technological hurdles for industry to implement the proposed provisions for qualified climbers.

Hazard Assessment and Training

Proposed § 1910.30 introduces requirements specifying that employees be trained by a qualified person and that the training prepare employees to recognize hazards created by the work environment and equipment. As discussed above in the training section of this preamble (§ 1910.30), this training requirement would apply only to personal fall protection equipment and dockboards. Employees must be retrained when changes occur in the workplace or in the types of fall protection systems or equipment used, they exhibit an absence of understanding and skill needed to recognize fall-related hazards, or other circumstances indicate that employee safety may be in jeopardy.

The proposed revision to subpart I would introduce a requirement that employers conduct hazard assessment and training in accordance with the requirements in § 1910.132(d) and (f) in workplaces where fall protection PPE would be provided to employees. Survey data indicate that a significant percentage of employers currently assess the occupational fall hazards facing their employees, and that a similarly large percentage of employers train their employees in the proper use of fall protection PPE (OSHA, 1994). For employers that would incur the administrative burden of this proposed requirement for the first time after OSHA issues the final rule, OSHA anticipates that there would be no technological difficulties to achieve compliance.

The revised subpart D standards include provisions for personal fall protection systems, including components such as harnesses, connectors, lifelines, lanyards, anchorages, and travel restraint lines. The criteria that these components must meet when they are used are included in proposed 29 CFR part 1910, § 1910.140 of subpart I, and are referenced in revised subpart D.

The revisions to the walking-working surfaces and fall protection systems described in this proposal include revisions to several subparts in 29 CFR part 1910 other than subparts D and I. For purposes of this analysis, the determinations of technological feasibility described in this PEA include the revisions proposed for these other subparts.

The requirements applicable to personal fall protection systems specified by this proposed rulemaking codify basic safety criteria for these systems. These criteria reflect common industry safety practices, and are met by equipment that is currently used and readily available. The revised standards generally do not require changes in current technology or current practices for employers who use standard safety equipment and follow standard safety procedures. The technological feasibility of the proposed requirements has been demonstrated by current manufacturers of fall protection equipment, restraint line systems, and controlled descent devices, and by the application of these technologies in diverse industrial activities and circumstances.

In conclusion, OSHA has determined that the technological demands placed upon employers through compliance with the proposed revisions to subparts D, I, and other affected subparts of part 1910 can be feasibly implemented within the schedule presented in this proposal. Therefore, OSHA anticipates that there would be no technological hindrance to the significant improvement of employee safety on walking and working surfaces resulting from the issuance of this proposal.

F. Costs of Compliance

Introduction

This subsection presents OSHA's preliminary analysis of the compliance costs associated with the proposed standards for walking-working surfaces and fall protection in general industry. This cost analysis begins with a discussion of the assumptions used in the analysis. OSHA's preliminary analysis of compliance costs is largely based on the cost analysis by OSHA's contractor, Eastern Research Group (ERG, 2007, Ex. 6). The discussion focuses on what constitutes the regulatory baseline (*i.e.*, current conditions) from which the costs, impacts, and benefits of the proposed rule are measured. The role of consensus standards and the compliance rates for the existing rule

are also discussed for their impact on the cost analysis (*i.e.*, where codification of existing consensus standards result in no incremental costs for the proposed rule).

Following the discussion of baseline assumptions, the next subsection reviews the proposed rule on a paragraph-by-paragraph basis for those paragraphs that potentially could result in costs to industry. The final subsection examines one-time costs to bring employers into compliance with the proposed rule, as well as the annual costs for training new employees and retraining existing employees. OSHA's cost estimates are presented by affected industry, and by applicable provision. The final subsection concludes with a discussion and tables that summarize the costs for each section of the proposed standard, and aggregates them to estimate total costs.

Cost Assumptions

Baseline From Which Costs Are Estimated

The Office of Management and Budget's guidance on regulatory analysis (OMB, 2003) recommends developing a baseline against which to measure the costs and benefits of a rule. The baseline should be the best assessment of conditions absent the proposed standard, and is frequently assumed to resemble the present. The baseline for this preliminary cost analysis, then, includes compliance rates with existing subpart D and subpart I, as well as with national consensus standards. For a discussion on the theoretical underpinnings for the use of consensus standards as a baseline in OSHA's cost analysis, *see* ERG, 2007 (Ex. 6).

ERG analyzed OSHA inspections for fiscal year 2005 that resulted in a citation (OSHA, 2006a); *see* Table V–15. The first column in the table presents cases where a citation was issued for any reason, and the other columns in the table indicate cases of non-compliance with a section of 29 CFR part 1910, subpart D. Conceivably, the non-compliance rates in Table V–15 may be overstated because there are inspections with no citations that are not included in this estimate.

Based on ERG's analysis, OSHA determined that upper-bound non-compliance rates for floor guarding requirements in proposed § 1910.23 vary by industry. For example, Finance, Insurance, and Real Estate has the lowest non-compliance rate (2.8 percent), while Wholesale Trade has the highest non-compliance rate (13.6 percent). For the requirements for fixed industrial stairs, the non-compliance rates are quite low, ranging from 0 percent (Finance, Insurance, and Real Estate) to 2.7 percent (Wholesale Trade). For the remaining paragraphs (portable wood ladders, portable metal ladders, fixed ladders, scaffolding, and manually propelled mobile ladder stands and scaffolds), non-compliance rates do not exceed 1.2 percent.

Thus, for § 1910.25–.29, the assumption of 100 percent industry compliance may be reasonable.[19] That is, costs are only incurred when the proposed requirements exceed, or would be more costly than, the current requirements. However, where costs might be incurred under more stringent proposed requirements, the upper-bound non-compliance rate for existing requirements (*i.e.*, the rates shown in Table V–15, applied by sector) can be used as an estimate of the proportion of facilities that might incur costs under the proposed rule. Although OSHA and ERG use the term "upper-bound" here for theoretical and modeling purposes, actual non-compliance rates for existing requirements may be higher. OSHA requests comment on rates and levels of non-compliance with respect to current requirements in subpart D.

If meeting an existing requirement would also meet the proposed requirement, no costs were assigned by OSHA to the provision. For example, the existing language for § 1910.27(b)(1)(iii) states that the clear length of a rung or cleat in a fixed ladder shall be a minimum of 16 inches. Proposed § 1910.23(b)(5)(ii) states that fixed ladders used in the telecommunication industry must have a minimum clear step or rung width of 12 inches. A telecommunication ladder that meets existing requirements (16 inches) would also meet the new requirements (a minimum of 12 inches); hence, no costs were assigned to such changes. Later in this cost analysis, a detailed provision-by-provision examination of potential costs will provide further concrete examples of OSHA's application of estimates of current industry compliance/practice.

BILLING CODE 4510–29–P

[19] Theoretically, the baseline assumption should be compliance with the current standards. Costs for all industrial sectors to meet the current standards were considered at the time the current standards were promulgated.

Table V-15
Compliance with Current 29 CFR 1910 Requirements

Sector	Inspections With Citations	Inspections With Subpart D Citations													
		§1910.23		§1910.24		§1910.25		§1910.26		§1910.27		§1910.28		§1910.29	
	Total	Floor Guarding		Fixed Industrial Stairs		Portable Wood Ladders		Portable Metal Ladders		Fixed Ladders		Scaffolding		Manually Propelled Aerial Platforms	
Manufacturing	6,773	732	10.8%	168	2.5%	18	0.3%	23	0.3%	60	0.9%	16	0.2%	19	0.3%
Transportation and Utilities	1,301	115	8.8%	15	1.2%	0	0.0%	7	0.5%	11	0.8%	3	0.2%	5	0.4%
Retail trade	680	58	8.5%	14	2.1%	2	0.3%	6	0.9%	3	0.4%	1	0.1%	2	0.3%
Wholesale trade	670	91	13.6%	18	2.7%	1	0.1%	7	1.0%	8	1.2%	4	0.6%	0	0.0%
Finance, Insurance, and Real Estate	107	3	2.8%	0	0.0%	0	0.0%	2	1.9%	0	0.0%	1	0.9%	0	0.0%
Services	1,938	106	5.5%	19	1.0%	4	0.2%	5	0.3%	10	0.5%	15	0.8%	3	0.2%
All sectors	**11,469**	**1,105**	**9.6%**	**234**	**2.0%**	**25**	**0.2%**	**50**	**0.4%**	**92**	**0.8%**	**40**	**0.3%**	**29**	**0.3%**

Source: ERG, 2007, based on analysis of OSHA's Integrated Management Information System inspection database (OSHA, 2006a).

Compliance Met by Least-Cost Method

Consistent with traditional cost-impact analyses, OSHA assumed that employers will meet a regulatory requirement by choosing the least expensive means to do so. Thus, if the proposed regulation identifies several other means of meeting a requirement along with the current method, the employer would be expected to select the least cost method. Accordingly, if the alternative method specified in the proposed regulation is more expensive than the current method, the employer would be expected to use the current method to meet the requirement. For example, under proposed § 1910.29(b)(1), an employer can meet the duty to have fall protection for an employee on a walking-working surface with an unprotected edge by (1) the use of guard rail systems, safety net systems, or personal fall arrest systems, or (2) having the employee work in a designated area. The current standard only specifies option (1). Therefore, OSHA assigned no costs to proposed § 1910.29(b)(1).

In some cases there might be cost savings to an employer in choosing the least-cost method for complying with a provision in the proposed rule. However, those savings are not estimated in this report.

Compliance With National Consensus Standards

National consensus standards serve as the "baseline" against which incremental costs and benefits of a proposed standard are measured. If the proposed language requires a level of safety equivalent to that in an existing consensus standard, then there is no difference between the proposed regulatory language and the baseline, except that the proposed standard would be mandatory rather than voluntary. Thus, the costs are those associated with the change from a voluntary standard to a mandatory standard. These costs would be incurred only by that part of the population that currently does not comply with voluntary standards. If, however, the proposed standard is more stringent than the consensus standard, all employers would incur compliance costs solely attributable to the proposed OSHA standard.

ERG developed a logic-flow diagram outlining the process for identifying costs associated with new regulatory language (*see* ERG, 2007, Ex. 6, Figure 3–2). The starting point is a side-by-side, provision-by-provision comparison of the existing and new regulatory language. In many cases, the language might have changed to enhance comprehension of the regulation without changing in the scope of activities covered or the requirements for a safe workplace. In some cases, the revised language gives the employer alternative methods of compliance that provide protection for employees that is equivalent to the original standard, and which result in *de minimis* costs to the employer.

If there is a change from the existing to the proposed standard, the second decision point is to determine whether the proposed standard is equivalent to an existing consensus standard. If it is, then the cost associated with the new standard is the change from a voluntary standard to a mandatory standard. Table V–16 presents a listing of national consensus standards and the associated section of the proposed rule for subparts D and I. If the proposed rule does not contain more stringent requirements than an existing national consensus standard, and equipment purchased or installed meets these standards, no costs were assigned to the proposed rule. However, for the portion of the industry that is not currently complying with the voluntary standard, costs represent compliance with the proposed standards. It can be argued, however, that costs are attributable to the proposed standard only if the employer has the option of not complying with the consensus standard.

At the next decision point, the presence or absence of a "grandfather" provision determines whether costs are incurred by existing establishments to retrofit and upgrade to the new requirements when the standard is implemented or only when establishments replace infrastructure or equipment at a time of the employer's choosing. The cost effects of grandfather provisions are discussed in more detail below and in ERG (ERG, 2007, Ex. 6).

TABLE V–16—PROPOSED SUBPART D REQUIREMENTS AND ASSOCIATED NATIONAL CONSENSUS STANDARDS

Subpart D	National consensus standard
§ 1910.22 General Requirements	ANSI/ASSE A1264.2–2006, American National Standard for the Provision of Slip Resistance on Walking/Working Surfaces.
	ASME B56.1–2004, American Society of Mechanical Engineers, Safety Standard for Low Lift and High Lift Trucks.
§ 1910.23 Ladders	ANSI A14.1–2000, American National Standard for Ladders—Wood Safety Requirements.
	ANSI 14.2–2000, American National Standard for Ladders—Portable Metal—Safety Requirements.
	ANSI A14.3–2002, American National Standard for Ladders—Fixed—Safety Requirements.
	ANSI A14.4–2002, American National Standard Safety Requirements for Job-Made Wooden Ladders.
	ANSI A14.5–2000, American National Standard for Ladders—Portable Reinforced Plastic—Safety Requirements.
	ANSI A14.7–2006, American National Standard for Mobile Ladder Stands and Mobile Ladder Stand Platforms.
§ 1910.24 Step Bolts and Manhole Steps.	ASTM C478–07, American Society for Testing and Materials Standard Specification for Precast Reinforced Concrete Manhole Sections.
	ASTM A394–05, American Society for Testing and Materials Specification for Steel Transmission Tower Bolts, Zinc-Coated and Bare.
	ASTM C497–05, American Society for Testing and Materials Test Methods for Concrete Pipe, Manhole Sections, or Tile.
	IEEE[20] 1307–2004, IEEE Standard for Fall Protection for Utility Work.
	TIA[21] –222–G–2005, Structural Standard for Antenna Supporting Structures and Antennas.
§ 1910.25 Stairways	ANSI A1264.1–1995 (R2002), American National Standard for Safety Requirements for Workplace Floor and Wall Openings, Stairs and Railing Systems.
	ANSI A1264.1–2007, American National Standard Safety Requirements for Workplace Walking/Working Surfaces and Their Access; Workplace, Floor, Wall and Floor Openings; Stairs and Guardrail Systems.

[20] IEEE: Institute of Electrical and Electronics Engineers.

[21] TIA: Telecommunications Industry Association.

TABLE V–16—PROPOSED SUBPART D REQUIREMENTS AND ASSOCIATED NATIONAL CONSENSUS STANDARDS—Continued

Subpart D	National consensus standard
	NFPA 101–2006, National Fire Protection Association Life Safety Code.
	ICC–2003, International Code Council International Building Code.
§ 1910.26 Dockboards (Bridge Plates).	ASME B56.1–2004, American Society of Mechanical Engineers, Safety Standard for Low Lift and High Lift Trucks.
	ANSI/MH30.1–2000, American National Standard For the Safety Performance, and Testing of Dock Leveling Devices Specification.
	ANSI/MH30.2–2005, Portable Dock Loading Devices: Safety, Performance, and Testing.
§ 1910.27 Scaffolds and Rope Descent Systems.	ANSI/IWCA I–14.1–2001, Window Cleaning Safety.
	ANSI/ASCE 7–2005, American National Standard for Minimum Design Loads for Buildings and Other Structures.
	ANSI A1264.1–1995 (R2002), American National Standard for Safety Requirements for Workplace Floor and Wall Openings, Stairs and Railing Systems.
	ANSI A1264.1–2007, American National Standard Safety Requirements for Workplace Walking/Working Surfaces and Their Access; Workplace, Floor, Wall and Floor Openings; Stairs and Guardrail Systems.
§ 1910.28 Duty to have Fall Protection.	ANSI A10.11–1989 (R1998), American National Standard for Construction and Demolition Operations—Personnel and Debris Nets.
§ 1910.29 Fall Protection Systems Criteria and Practices.	ANSI A14.3–2002, American National Standard for Ladders—Fixed—Safety Requirements.
	ANSI A14.7–2006, American National Standard for Mobile Ladder Stands and Mobile Ladder Stand Platforms.
§ 1910.30 Training Requirements	ANSI A1264.1–1995 (R2002), American National Standard for Safety Requirements for Workplace Floor and Wall Openings, Stairs and Railing Systems.
	ANSI A1264.1–2007, American National Standard, Safety Requirements for Workplace Walking/Working Surfaces and Their Access; Workplace, Floor, Wall and Floor Openings; Stairs and Guardrail Systems.
	ANSI/IWCA I–14.1–2001, Window Cleaning Safety.
	ANSI Z359.0–2007, American National Standard, Definitions and Nomenclature Used for Fall Protection and Fall Arrest.
	ANSI Z359.4–2007, American National Standard, Safety Requirements for Personal Fall Arrest Systems, Subsystems and Components.
	ANSI Z359.3–2007, American National Standard, Minimum Requirements for a Comprehensive Managed Fall Protection Program.
	ANSI Z359.3–2007, American National Standard, Safety Requirements for Positioning and Travel Restraint Systems.
	ANSI Z359.4–2007, American National Standard, Safety Requirements for Assisted-Rescue and Self-Rescue Systems, Subsystems and Components.

Source: U.S. Dept. of Labor, OSHA, Directorate of Standards and Guidance, 2009.

Some equipment addressed by the proposed standard, such as portable ladders or mobile ladder stands, is commercially produced and purchased in ready-to-use conditions by employers. OSHA believes that such equipment, in virtually all cases, will be designed and fabricated to meet current consensus standards because equipment manufacturers will seek to avoid: (1) The small market represented by employers that would purchase non-compliant equipment, and (2) the liabilities associated with the manufacture of non-compliant equipment.

Typically, an employer would use architects, engineers, and/or contractors to design, fabricate and install certain types of site-specific equipment. While it is conceivable that an employer might insist on installing nonconforming equipment, OSHA believes that professional standards for architects and engineers, local building codes, and potential liability concerns would dictate that virtually all employers would voluntarily choose to upgrade equipment to conform to existing national consensus standards. For these reasons, OSHA concludes that compliant equipment will be available for the proposed requirements. For example, proposed § 1910.23(b)(1) specifies that ladder rungs and steps must be parallel, level, and uniformly spaced when the ladder is in a position for use. While steps are covered in the existing § 1910.25(c)(2)(i)(b), rungs are not. However, both rungs and steps are covered in the national consensus standards (*see* Table V–16).

Likewise, the spacing for rungs, cleats, and steps of step stools and extension trestle ladders in proposed § 1910.23(b)(3) and (4) are new with respect to the existing standard, but not with the consensus standard for ladders. Proposed § 1910.23(e)(5) requires that grab bars on fixed ladders extend 42 inches above the access/egress level or landing platform served by the ladder. This provision is found in the ANSI 14.3–2002 standard for fixed ladders. Therefore, no costs were assigned to proposed § 1910.23(e)(5).

In conclusion, for the purpose of establishing a baseline, OSHA assumed that equipment met the national consensus standard in effect at the time of installation. For additional analysis of the interface of national consensus standards with OSHA standards, *see* ERG, 2007, pp. 3–6 and 3–14 (Ex. 6).

No Costs Due to Grandfathering Provision

Table V–17 lists the paragraphs in the proposed standard with new requirements, but which also have a "grandfather" provision for existing conditions. A grandfather provision exempts equipment that currently is in place from requirements that strengthen or upgrade the safety features of the equipment. Due to this provision, no costs will be incurred for modification or replacement of equipment covered by these paragraphs.

TABLE V–17—PROPOSED PARAGRAPHS WITH GRANDFATHER PROVISIONS

Paragraph	Subject
§ 1910.23(d)(2)	Fixed ladders must be designed, constructed, and maintained as follows: (i) Fixed ladders must be capable of supporting two live loads of at least 250 pounds each, concentrated between any two consecutive attachments, plus anticipated loads caused by ice buildup, winds, rigging, and impact loads resulting from the use of ladder safety systems * * * (ii) Each step or rung must be capable of supporting at least a single concentrated load of 250 pounds applied in the middle of the step or rung.
§ 1910.24(a)(1)	All step bolts that are used in corrosive environments must be constructed of, or coated with, a material that will retard corrosion of the step or bolt.
§ 1910.24(a)(7)	Each step bolt installed must be capable of supporting, without failure, at least four times its maximum intended load.
§ 1910.24(b)(2)	The employer must ensure that manhole steps: (i) are provided with slip-resistant surfaces such as, corrugated, knurled, or dimpled surfaces; (ii) used in corrosive environment are constructed of, or coated with, a material that will retard corrosion of the step; (iii) have a minimum clear step width of 10 inches; (iv) are spaced uniformly, not more than 16 inches apart; (v) have a minimum perpendicular distance between the centerline of the manhole step to the nearest permanent object in back of the step of at least 4.5 inches; and (vi) are designed to prevent the employee's foot from slipping or sliding off the end of the manhole step.
§ 1910.25(a)(6)	When a door or a gate opens directly on a stairway, a platform must be provided, and the swing of the door or gate must not reduce the effective usable depth to less than 22 inches.
§ 1910.26(b)	Dockboards must be designed, constructed, and maintained to prevent equipment from running off the edge.
§ 1910.29(f)(1)(ii)	The height of stair rail systems must not be less than 36 inches.

Source: ERG, 2007.

Sections of the Proposed Standard With Cost Impacts

This subsection provides a brief paragraph-by-paragraph review of the proposed rule. Only requirements that might involve costs incremental to those associated with current requirements and national consensus standards are described.

Table V–18 summarizes the proposed paragraphs that might result in costs to the employer. These are primarily inspection and training costs. For the purpose of this analysis, OSHA distinguished between informal and formal training (ERG, 2007, Ex. 6). For example, proposed § 1910.23(b)(12) states that an employee must face the ladder when ascending or descending the ladder. OSHA assumed such instruction can be done on an in-house, informal basis (*e.g.,* "on-the-job" training), using materials such as OSHA training videos. When training is done on an informal basis, OSHA did not assign a cost to the training. When the proposed regulatory text uses the words "trained" or "training," OSHA assumed that the instruction will be done on a more formal basis, possibly with an outside person being hired to provide the course. OSHA assumed that an employer will choose to maintain documentation of all formal training and, thus, assigned a cost for the administrative task.

TABLE V–18—PARAGRAPHS OF THE PROPOSED STANDARDS FOR SUBPARTS D AND I ANALYZED FOR COST IMPACTS

Paragraph	Subject
§ 1910.22(d)(1)	Regular and periodic inspection of walking/working surfaces.
§ 1910.22(d)(2)	Unsafe conditions must be guarded until repaired.
§ 1910.22(d)(3)	Qualified person must inspect repair.
§ 1910.23(b)(11)	Training: When ascending or descending a ladder, the user must face the ladder.
§ 1910.23(b)(12)	Training: Each employee must use at least one hand to grasp the ladder when progressing up and down the ladder.
§ 1910.23(b)(13)	Training: An employee must not carry any object or load that could cause the employee to lose his or her balance and fall.
§ 1910.23(c)(5)	Training: Use of portable single rail ladders is prohibited.
§ 1910.23(c)(6)	Training: Ladders must not be moved, shifted, or extended while occupied by employees.
§ 1910.23(e)	Due diligence on the part of the employer to ensure mobile ladder stands and platforms meet the requirements.
§ 1910.23(e)(1)(vii)	Mobile ladder stands and platforms must not be moved.
§ 1910.24(a)(8)	Visual inspection of step bolts before each use.
§ 1910.24(b)(3)	Visual inspection of manhole steps before each use.
§ 1910.24(b)(2)(i)	Manhole steps are provided with slip-resistant surfaces.
§ 1910.24(b)(2)(vi)	Manhole steps are designed to prevent the employee's foot from slipping or sliding off the end of the manhole step.
§ 1910.27(b)(2)(ii)	When rope descent systems are used, employees must be trained in accordance with § 1910.30. Costs for this paragraph are therefore included in § 1910.30.
§ 1910.27(b)(2)(iv)	When rope descent systems are used, employees must use proper rigging, including sound anchorages and tiebacks.
§ 1910.28(a)(2)	Employer must determine that walking-working surfaces have the strength and structural integrity to safely support employees.
§ 1910.28(b)(4)	Installation of guardrails and handrails on dockboards.
§ 1910.28(b)(10)(iii)	Inspection of ladder safety systems.
§ 1910.28(b)(10)(v)	Each employee who routinely climbs fixed ladders must satisfy the criteria for qualified climber found in § 1910.29(h). Costs associated with this training are assigned to § 1910.29(h).

TABLE V–18—PARAGRAPHS OF THE PROPOSED STANDARDS FOR SUBPARTS D AND I ANALYZED FOR COST IMPACTS—Continued

Paragraph	Subject
§ 1910.28(b)(10)(vi)	Training: Employee must have both hands free while ascending or descending ladder (outdoor advertising/billboards operations).
§ 1910.29(b)(15)	Inspection of manila, plastic, or synthetic rope being used as top rails or midrails.
§ 1910.29(h)	Training for qualified climbers.
	Retraining for qualified climbers as necessary.
	Performance observations.
§ 1910.30(a)	Training: Fall hazards.
§ 1910.30(b)	Training: Equipment hazards.
§ 1910.30(c)	Retraining.
§ 1910.140	Hazard assessment.
§ 1910.140(c)(18)	Personal fall protection systems inspected before each use.

Source: ERG, 2007.

Finally, three requirements in the proposed standard specify that training must be done in accordance with proposed § 1910.30:

- Proposed § 1910.27(b)(2)(ii): Rope descent systems;
- Proposed § 1910.28(b)(1): Unprotected sides and edges; and
- Proposed § 1910.28(b)(10)(v): Outdoor advertising (billboards).

The costs for proposed § 1910.30 include the costs for the three paragraphs listed above.

In the following subsection, organized by proposed regulatory provision, OSHA discusses the potential cost implications of the new requirements. Proposed changes expected to result in little or no costs were described in general terms earlier in this cost analysis and are not addressed below. For further details, *see* the ERG report (ERG, 2007, Ex. 6).

General Requirements (§ 1910.22)

§ 1910.22(c). Access and egress. The employer must ensure that employees are provided with and use a safe means of access to, and egress from, one surface to another. The language in the existing § 1910.22(b) specifies that aisles and passageways must be kept clear, in good repair, and with no obstruction across or in aisles that could create a hazard. For this PEA, OSHA interpreted the language in proposed § 1910.22(c) as generalizing the terms "aisles" and "passageways" to cover all means of access and egress. With this interpretation, the terminology in the proposed rule is consistent with that in a National Fire Protection Association consensus standard (NFPA 101). Thus, OSHA assigned no costs to proposed § 1910.22(c).

§ 1910.22(d) Maintenance and repair. This new provision sets forth requirements for the employer to inspect the walking/working surfaces, guard hazardous conditions to prevent employee use until the hazard is corrected, and ensure that the repair or maintenance work is inspected by a qualified person. The costs for these safe work practices are considered below under COST ESTIMATION and are assumed to include the costs for inspection described in proposed § 1910.28.

Ladders (§ 1910.23)

§ 1910.23(a) Application. This proposed paragraph covers special wood ladders specifically excluded in the existing standard, including fruit picker's ladders, combination step and extension ladders, stockroom step ladders, aisle-way step ladders, shelf ladders, and library ladders. However, OSHA assumed that these ladders meet consensus standards for wooden ladders (*see* Table V–16); therefore, OSHA expects that no costs will be incurred with the expanded application.

§ 1910.23(b)(4)(iii). This proposed paragraph concerns rolling ladders in communications centers and was moved from § 1910.268(h)(5)—Telecommunications. Thus, this is not a new requirement and has no costs.

§ 1910.23(b)(9). Both the existing and proposed standards have a requirement to inspect ladders before use. OSHA anticipates that the inspection frequency would not increase under the proposed standard. Therefore, no additional costs are expected.

§ 1910.23(b)(11)–(13); § 1910.23(c)(5) and (6), (10)–(11), and (13). These eight paragraphs include instructions to employees on the proper use of ladders. Proposed § 1910.23(c)(5) prohibits the use of single-rail ladders. This is consistent with the requirements for the construction industry standard at § 1926.1053(b)(19). Thus the requirement not to use a single-rail ladder is a matter of training. The wide availability of permitted ladders means there are no equipment costs associated with the prohibition. Training costs are considered below under COST ESTIMATION.

§ 1910.23(c)(14). This proposed provision states that the reach of the ladder and ladder sections must not be increased by any means unless specifically designed for the application. Ladders and ladder sections cannot be tied or fastened together to provide longer length unless the equipment is designed for this purpose. This provision might cause the employer to incur a cost if it were necessary to purchase a longer ladder of sufficient length for the task. However, the existing regulations at § 1910.25(d)(2)(ix) and § 1910.26(c)(3)(vi) specify that neither wood nor metal portable ladders may be spliced, tied, or fastened together to create a longer section unless the manufacturer has designed the equipment for such a purpose. The proposed standard, then, expands the prohibition to all other means of joining ladder sections. There are no data estimating the frequency of such occurrences but, presumably, they are rare. Thus, OSHA did not assign a cost to this paragraph.

§ 1910.23(d)(2)(i). As proposed, fixed ladders must be capable of supporting two live loads of at least 250 pounds, plus an additional concentrated load of 250 pounds each, plus anticipated loads caused by ice build-up and other conditions. Each rung must be capable of supporting at least a single concentrated load of 250 pounds. The language in this new requirement reflects the consensus standard in ANSI A14.3–2002 (*see* Table V–16). The existing language, however, specifies a single concentrated load of 200 pounds.

ERG estimated that there are approximately 2.75 million fixed ladders over 20 feet in length in the Untied States (ERG, 2007, Ex. 6). The requirement to support two loads of 250 pounds each dates back to the 1984

version of ANSI A14.3. It is therefore highly likely that much of the population of existing fixed ladders was built when the 250-pound requirement was in the voluntary standard. However, we do not know the age distribution of fixed ladders in the United States or when a ladder was most recently reconstructed.

The cost differential for each ladder is the difference between a design to support one live load of 200 pounds and two live loads of 250 pounds each. Given that the fixed ladder must be constructed to fit a specific site, it is likely that the labor costs for either design would be comparable. Therefore, the cost attributable to the consensus standard is primarily attributable to the difference in materials, e.g., thicker steel. Such costs are likely to be highly site-specific and not easily estimated. However, given (1) that the cost for materials is a fraction of the overall cost of building or rebuilding the fixed ladder, and (2) the incremental cost is the difference between the materials planned and materials needed, these incremental costs are likely to be modest and will not impose a significant impact on the small population of employers who are non-compliant with the current consensus standards. OSHA invites public comment on the potential costs and impacts associated with this requirement.

§ 1910.23(d)(12)(i). In the proposed text, "step-across distance" is measured from the centerline of the steps or rungs of a fixed ladder. The existing definition measures the step-across distance from the nearest edge of the ladder to the nearest edge of the structure or equipment. The minimum distance under the proposed standard is 7 inches, and under the existing standard it is 2.5 inches; the proposed maximum distance is 12 inches. Proposed paragraph § 1910.23(b)(4) specifies a minimum clear step or rung width of 11.5 inches for portable ladders and 16 inches for individual rung and fixed ladders; thus, the distance from the centerline to the inside edge of the ladder ranges from roughly 6 to 8 inches. Adding the existing requirement of 2.5 inches from the nearest edge of the ladder to the nearest edge of the structure or equipment to the 6- to 8-inch centerline width results in a step-across width of 8.5 to 10.5 inches. Thus any fixed ladder that meets the current requirements also meets the proposed requirements. No costs were assigned to this paragraph.

§ 1910.23(d)(12)(ii). The proposed standard specifies that the step-across distance from the centerline of the steps or rungs of a fixed ladder to the access/egress point of the platform edge for side step ladders must be between 15 and 20 inches. Based on Figure D–10 in the existing standard, the maximum space from the edge of the ladder to the platform (*i.e.,* access/egress point) is 12 inches. As noted in the previous paragraph, the centerline width for a fixed ladder ranges from roughly 6 to 8 inches. The total step-across distance under the existing standard ranges from 18 to 20 inches. Thus, a fixed ladder that meets the current requirements also meets the proposed requirements. Therefore, OSHA assigned no costs to this paragraph.

§ 1910.23(e). The only provision that does not have a corresponding requirement in the national consensus standard, proposed § 1910.23(e)(1)(vii) (specifying that occupied mobile ladder stands and platforms must not be moved), is a work practice requirement, and compliance is achieved through ladder safety training and enforcement. Therefore, any cost for proposed § 1910.23(e)(1)(vii) would be associated with workplace practices addressed through training. *See* the section COST ESTIMATION, below, for ladder safety training costs.

All other provisions meet the national consensus standard in the ANSI A14 series. An analysis of fiscal year 2005 OSHA inspection data for violations of existing subpart D indicate that the failure to provide safe ladders is low (e.g., 0.2 percent of the violations were for portable wood ladders, 0.4 percent for metal ladders, and 0.8 percent for fixed ladders). Based on these data, OSHA infers that there is a nearly 100 percent compliance with the provisions of the current consensus standards. Therefore, no costs were assigned for equipment upgrades. However, OSHA assigned costs for meeting the technical specifications found in proposed § 1910.23(e).

Step Bolts and Manhole Steps (§ 1910.24)

The requirements for step bolts are new to subpart D. In the preliminary regulatory impact analysis for the 1990 proposed rule, OSHA noted, "Manufactured products, such as ladders, step bolts, manhole steps * * * generally meet or exceed proposed OSHA specifications." (OSHA, 1990a.) A 2003 OSHA interpretation document comments that OSHA believes the IEEE 1307–1996 consensus standard, in most cases, prevents or eliminates serious hazards (OSHA, 2003a). IEEE 1307–1996 defines "failure" in a step bolts as occurring when step bolts are bent greater than 0.26 rad (15 degrees) below the horizontal. Proposed § 1910.24(a)(9) mirrors that definition. Because IEEE revised the standard in 2004, OSHA assumed that industry is using the more up-to-date consensus standard.

§ 1910.24(a)(1). This proposed provision reads:

> All step bolts installed on or after (date 90 days after the effective date of the final rule in the **Federal Register**) that are used in corrosive environments must be constructed of, or coated with, a material that will retard corrosion of the step or bolt.
>
> The national consensus standard applicable to this proposed requirement is ASTM Specification for Steel Transmission Tower Bolts, Zinc-Coated and Bare (ASTM A394–05). The appendix to the consensus standard notes that the dimensions of ladder bolts, step bolts, and equipment support bolts shall be specified by the purchaser. The ASTM standard describes three types of bolts covered by the standard:
>
> • Type 0: hot-dip zinc-coated bolts made of low or medium carbon steel (ASTM 394–05, section 1.1.1).
>
> • Type 1: hot-dip zinc-coated bolts made of medium carbon steel, quenched and tempered (ASTM 394–05, section 1.1.2).
>
> • Type 3: Bare (uncoated), quenched and tempered bolts made of weathering steel (ASTM 394–05, section 1.1.4).[22]

Appendix A.2 of the consensus standard mentions that bolts should be Type 0 unless agreed upon by the manufacturer and purchaser. That is, the default condition is that the bolt be zinc-coated; therefore, such bolts would meet the proposed OSHA requirement for corrosion resistance. Presumably, the use of any other bolt type would suggest that the manufacturer and purchaser have agreed that the bolt is appropriate for the intended environment and intended use. Since manufacturers of step bolts are unlikely to make non-compliant step bolts, OSHA assigned no costs to § 1910.24(a)(1).

§ 1910.24(a)(6). This proposed provision reads:

> Step bolts installed before (date 90 days after the effective date of the final rule in the **Federal Register**) must be capable of supporting their maximum intended load.

The requirement that a step bolt must be capable of supporting its maximum intended load is consistent with IEEE 1307–2004, Standard for Fall Protection for Utility Work. Section 9.1.1.1(d) in that standard reads:

> Step bolts shall [b]e capable of supporting the intended workload [as defined for the application per the applicable ANSI standard(s)], but in no case shall the minimum design live load be less than a simple concentrated load of 271 kg (598.4 lb) applied 51mm (2 inches) from the inside face of the step bolt head.

[22] Type 2 bolts were withdrawn in 2005.

Therefore, no costs were assigned to this provision.

§ 1910.24(a)(7). This proposed paragraph requires that step bolts installed after the effective date of the final rule be capable of supporting four times their maximum intended load. As discussed in the preamble to the proposed rule, OSHA considers a 5/8-inch bolt to meet this requirement, and that bolts of that size are readily available. Therefore, no incremental costs would be expected in relation to this provision.

§ 1910.24(a)(8) and § 1910.24(b)(3). Under these proposed paragraphs, step bolts and manhole steps must be visually inspected before each use. Inspection costs are considered below under COST ESTIMATION.

§ 1910.24(b). The language in the proposal is summarized in Table V–19, along with the corresponding section of ASTM C–478–06b.

There are three additional proposed requirements that exceed what is specified in a national consensus standard for steps in pre-cast concrete manhole sections:

- Manhole steps must be provided with slip-resistant surfaces such as corrugated, knurled, or dimpled surfaces;
- Manhole steps must be designed to prevent the employee's foot from slipping or sliding off the end of the manhole step; and
- Manhole steps must be replaced if they are bent to such a degree that there is no longer 4 inches of clearance to the wall.

TABLE V–19—MANHOLE STEPS

Provision	Proposed language	ASTM C 478–06b section
§ 1910.24(b)(1)	Manhole steps installed before (date 90 days after the effective date of the final rule in the **Federal Register**) must be capable of supporting their maximum intended load.	
§ 1910.24(b)(2)	The employer must ensure that manhole steps installed on or after (date 90 days after the effective rule in the **Federal Register**):	
§ 1910.24(b)(2)(i)	Are provided with slip-resistant surfaces such as, corrugated, knurled, or dimpled surfaces;	
§ 1910.24(b)(2)(ii)	Used in corrosive environments are constructed of, or coated with, a material that will retard corrosion of the step;	
§ 1910.24(b)(2)(iii)	Have a minimum clear step width of 10 inches (25 cm);	16.5.2
§ 1910.24(b)(2)(iv)	Are spaced uniformly, not more than 16 inches apart. The spacing from the entry and exit surface to the first manhole step may be different from the spacing between other steps;	16.4.1
§ 1910.24(b)(2)(v)	Have a minimum perpendicular distance between the centerline of the manhole step to the nearest permanent object in back of the step of at least 4.5 inches (11.4 cm); and	[23] 16.5.3
§ 1910.24(b)(2)(vi)	Are designed to prevent the employee's foot from slipping or sliding off the end of the manhole step.	
§ 1910.24(b)(3)	Manhole steps must be visually inspected before each use and be maintained in accordance with § 1910.22.	

Source: ERG, 2007.

ASTM C478–06b permits the use of uncoated or untreated ferrous steps as long as they are at least 1 inch in cross section, but is silent with regard to a slip-resistant surface or design. Because the proposed requirements appear to exceed those in a consensus standard, when a manhole section needs to be built or replaced, there would be incremental costs for slip-resistant/corrosion-resistant surfaces. Moreover, the proposed paragraph defines when a step has "failed" when still present in the manhole; thus there would also be step replacement costs. These costs are discussed further in the subsection below, COST ESTIMATION.

Stairs and Stairways (§ 1910.25)

§ 1910.25(a)(6). The existing standard says that for doors or gates that open directly onto a stairway, a platform must be provided, and the swing of the door must not reduce the effective width to less than 20 inches. In the proposed standard, platforms installed before 90 days after the effective date of the final rule need only comply with the existing requirements; therefore, there are no retrofit costs. For platforms installed on or after 90 days after the effective date of the final rule, the effective width is increased to 22 inches.[24] The incremental cost is that associated with adding 2 inches in clearance to the platform whenever the platform is replaced. This is likely to be a minimal increase in materials cost borne by the employer to meet the clearance specification. For the reasons given above under the subsection titled Compliance with National Consensus Standards, no incremental costs for meeting a consensus standard are attributable to the proposed OSHA standard.

§ 1910.25(c). Existing § 1910.25(b) does not permit spiral stairways except under special conditions. Spiral stairs would now be permitted under proposed § 1910.25(c). An existing spiral staircase that does not meet the proposed requirements would need to be modified or replaced. However, spiral staircases are likely to be relatively rare given that they are exceptions to the existing rule. Thus, OSHA did not assign costs to proposed § 1910.25(c).

§ 1910.25(d). This proposed paragraph is a response from OSHA to an OMB-initiated, government-wide effort to reform regulation in the U.S. manufacturing sector. The Copper and Brass Fabricators Council submitted a comment indicating that OSHA required the use of fixed stairs when ship stairs would be safer (OMB, 2005). Proposed § 1910.25(d) addresses that comment.

Ship stairs typically are installed with slopes of 50 degrees or greater; however, the existing standard for fixed stairs addressed stairs installed at angles between 30 and 50 degrees. Thus, ship stairs were not specifically addressed in the existing standard. Recently, OSHA has interpreted the standard in such a way that if an inspection found a set of ship stairs at an establishment (a violation of the existing standard) that

[23] ASTM C478–06b Section 16.5.3 specifies that the rung or cleat shall project a uniform clear distance of 4 inches minimum from the wall, to the embedment side of the rung. The proposed OSHA distance is measured from the centerline of the manhole step. Thus, if a step is at least an inch wide, a step that meets the ASTM 4-inch requirement would also meet the OSHA 4.5-inch requirement.

[24] The 22-inch clearance requirement for new structures matches ANSI A1264, Section 6.11.

conformed to the 1990 proposed standard for subpart D, OSHA would consider it a *de minimus* violation [25] (OSHA 2006b and 2006c). Therefore, the need to retrofit or replace a set of ship stairs under the proposed rule would be minimal; for that reason, OSHA assigned no costs to proposed § 1910.25(d).

§ 1910.25(e). Alternating tread stairs were not specifically mentioned in the existing standard. A letter from OSHA to a manufacturer of alternating tread stairs judged the stair design to be safe (OSHA, 1981). Alternating tread stairs are discussed in NFPA 101, section 7.2.11 (NFPA, 2006). Any alternating tread stair that meets the requirements of NFPA 101 also meets the requirements in proposed § 1910.25(e). Thus, there are no costs assigned to this provision.

Dockboards—Bridge Plates (§ 1910.26)

§ 1910.26(b). The proposed text for this provision reads:

> Dockboards put into service on or after [date 90 days after the effective date of the final rule in the **Federal Register**] must be designed, constructed, and maintained to prevent equipment from running off the edge.

§ 1910.26(e). The proposed text for this provision reads:

> Portable dockboards must be equipped with handholds or other means to permit safe handling.

The definition of a dockboard in ANSI MH30.2–2005, section 2.2, contains the language "as well as providing a run-off guard, or curb." OSHA believes that dockboards that are currently being manufactured conform to the ANSI standard. Therefore, the commercial dockboards likely come equipped with handholds, required in proposed § 1910.26(e). Therefore, OSHA believes that any costs associated with this provision would be minimal.

Scaffolds and Rope Descent Systems (§ 1910.27)

§ 1910.27(a). This proposed paragraph extends the construction industry requirements for scaffolds (except rope descent systems) to all other parts of industry. The construction industry scaffold standards (subpart L of 29 CFR part 1926) were updated on August 30, 1996 (OSHA, 1996), and contain requirements for all scaffolds that are now regulated by the general industry standards. OSHA believes that many general industry employers who use scaffolds also perform work covered by the construction industry standards and are already familiar with, and in compliance with, the construction industry scaffold standards. Therefore, the proposed requirements resolve any inconsistencies and, thus, no costs are attributed to this paragraph.

§ 1910.27(b)(1). Rope descent systems (also known as controlled descent devices) are an alternative to powered platforms. The proposed rule states that rope descent systems cannot be used for heights greater than 300 feet unless access cannot otherwise be obtained safely and practicably. The wording of the proposed rule is consistent with the industry consensus standard, ANSI/IWCA I–14.1, 2001. In other words, both the IWCA consensus standard and the proposed OSHA standard (1) prohibit the use of rope descent systems for descents exceeding 300 feet, and (2) contain an exclusion clause–*i.e.,* unless access cannot safely and practicably be obtained by other means. Because both contain the same exclusion clause, the OSHA requirement is no more restrictive than the consensus standard. Since this is a work-practice as opposed to an equipment specification requirement, incremental costs are attributable to the proposed standard to the extent that employers would not otherwise voluntarily comply with the IWCA standard.

The potential cost is, at most, limited to situations where (1) the building is 300 feet tall or higher, and (2) there is an alternative to the rope descent system that is practicable and safe. ERG examined a database developed by the Council on Tall Buildings and Urban Habitat, and identified slightly more than 1,900 buildings that are 300 feet (91.7 m) tall or higher (CTBUH, 2006). More than one in every four of these buildings is in New York City where State law does not allow the use of rope descent systems (DiChacho, 2006). Therefore, according to ERG, a better estimate of the number of potentially affected buildings is 1,500 buildings nationwide (ERG, 2007). OSHA presumes that some of these 1,500 buildings have permanently installed power platforms for access to the exterior of the building, and further presumes that using an existing system would be less expensive than setting up a rope descent system.

The final set of buildings for which proposed § 1910.27(b)(1) could result in costs are those where a safe and practicable alternative to a rope descent system exists but cannot be used due to technical factors specific to a building's history, architecture, or style of operation. For example, to regularly wash the windows of a tall building with many sharp angles or tiered levels, management may have found it cost-effective to contract for the use of rope descent systems rather than use powered platforms. Because all companies bidding on the project would be making those bids under the same set of constraints, proposed § 1910.27(b)(1) would not result in a loss in income to the window cleaning industry. There may be higher costs to the building owners but, although the cost cannot be estimated, OSHA considers the cost to be small given the limited number of buildings that potentially would be affected. OSHA requests information on the potential costs that building owners will incur to provide safe and practicable alternatives to rope descent systems.

§ 1910.27(b)(2)(ii). This proposed paragraph codifies safety provisions presented in the 1991 memorandum to OSHA's Regional Administrators, which are similar to what is now contained in the national consensus standard, ANSI/IWCA I–14.1 (OSHA, 1991b).

These safety provisions are:

- Training employees in the use of the equipment before it is used.
- Inspection of the equipment each day before use.
- Proper rigging, including sound anchorages and tiebacks, in all cases, with particular emphasis on providing tiebacks when counterweights, cornice hooks, or similar non-permanent anchorage systems are used.
- Use of a separate personal fall arrest system.
- All lines installed using knots, swages, or eye splices when rigging descent control devices shall be capable of sustaining a minimum tensile load of 5,000 pounds.
- Provisions are made for prompt rescue of employees.
- Ropes are effectively padded where they contact edges of the building, anchorage, obstructions, or other surfaces that might cut or weaken the rope.
- Provide for stabilization at the specific work location when descents are greater than 130 feet.

Some of the language in the OSHA 1991 memo has been updated for the proposed revision to the standard for subpart D, but most of these text changes (e.g., "prompt rescue" rather than "rescue" and "harness" rather than "body belt") are not anticipated to result in compliance costs. The exceptions are proposed § 1910.27(b)(2)(ii) and § 1910.27(b)(2)(iv). Proposed paragraph § 1910.27(b)(2)(ii) specifies that training must now be done in accordance with § 1910.30. OSHA presumes that costs for any training beyond what was done as a result of the 1991 memorandum

[25] See OSHA's Field Operation Manual: *https://www.osha.gov/OshDoc/Directive_pdf/CPL_02-00-148.pdf.*

would be attributed to proposed § 1910.30. Those costs are discussed below. Costs associated with proposed § 1910.27(b)(2)(iv) are described immediately below.

§ 1910.27(b)(2)(iv). When rope descent systems are used, the proposal requires employers to use proper rigging, including sound anchorages and tiebacks with particular emphasis on providing tiebacks when counterweights, cornice hooks, or similar non-permanent anchorages are used. It is apparent that IWCA expects to find buildings without anchorages. A key provision of ANSI/IWCA I–14.1 is a written work plan (section 1.7), and the IWCA Web site recommends that the person "whose job it is to look at and price jobs should be the primary person to develop the written plan." IWCA states further, that "this is the time when you *see* things like anchor points (or lack thereof), entrance ways, sharp edges, and other concerns. The best part of the written plan is the fact that it allows the building owner or manager to work with you in creating a safe place to work for you and your employees." (IWCA, 2007b) ANSI/IWCA I–14.1, section 17 lists options for roof support equipment, including:

- Parapets, cornices, and building anchorages (section 17.1).
- Davits and davit fixtures (a crane-like structure, section 17.2).
- Sockets (section 17.3).
- Tie-backs (section 17.4).
- Counterweighted outriggers (section 17.5).
- Parapet clamps and cornice hooks (section 17.6).
- Overhead monorail tracks and trolleys (section 17.7).

Several of these options, such as counterweighted outriggers, are transportable and are likely to be supplied by the contractor. Thus, the work plan delineates how the work is to be performed using a mix of contractor and property owner equipment. The voluntary standard provides several acceptable options for roof support equipment, and specifies the development of a work plan where both the contractor and property owner concur on how a safe job can be done at that property. OSHA believes that voluntary compliance with the consensus standard is likely to be high. Therefore, for this proposed provision, no costs were assigned for equipment.

Costs do result, however, from inspections and certification for providing assurances that an anchorage is sound. These costs are discussed below in the subsection titled COST ESTIMATION.

§ 1910.27(b)(2)(x). The proposed requirement to secure equipment is consistent with the consensus standard IWCA I–14.1–2001, section 3.10. Thus, no incremental costs are incurred for this proposed requirement.

§ 1910.27(b)(2)(xi). The proposed requirement to protect suspension ropes from exposure to open flames, hot work, corrosive chemicals, or other destructive conditions is an extension of the requirement to protect the integrity of the ropes specified in the 1991 OSHA memorandum. The costs for meeting this requirement are part of the training costs estimated in proposed § 1910.30.

Duty To Have Fall Protection (§ 1910.28)

The proposed regulatory text for § 1910.28 is a consolidation of the fall protection requirements in the existing rule, with two major revisions. First, comments submitted in response to the reopening of the rule in 2003 suggested that the fall protection requirements in subpart D should be consistent with those in subpart M of the construction standard. The proposed text for § 1910.28 brings consistency between the rules that might affect employers and employees in both the construction and general industry sectors. Second, the existing standard does not address the use of restraint systems, designated areas, or safety nets systems, nor is it clear as to where the use of personal fall protection systems is permitted. In contrast, the proposed standard allows employers to choose from various options in providing fall protection, that is, it is not as restrictive as the existing standard that primarily requires the use of standard railings (guardrails).

§ 1910.28(a)(2)—General. In the proposal, the employer must determine that the walking-working surface has the strength and structural integrity to safely support employees. In interpreting this proposed requirement to analyze costs, OSHA believes that this requirement can be met by a five- to ten-minute inspection of the surface or review of engineering paperwork. In rare circumstances, an employer might need to spend 15 to 30 minutes to determine if the work can proceed. Costs for this proposed provision are discussed later in this subsection where the duty to inspect is considered as part of the general requirement for an employer to periodically and regularly inspect walking/working surfaces in proposed § 1910.22(d). OSHA requests public comment on the expenses that employers typically would incur to comply with this requirement.

§ 1910.28(b)(1)—Unprotected sides and edges. Under the proposed rule, if a walking-working surface (vertical and horizontal) has an unprotected side or edge that is four feet or more above a lower level, an employee must be protected from falling by the use of guardrail systems, safety net systems, personal fall arrest systems, or the employee must work in a designated area. In the existing rule, the trigger height of four feet is found in:

- § 1910.23(b): every wall opening;
- § 1910.23(c)(1): every open-sided floor or platform; and
- § 1910.23(c)(2): the open sides of any runway.

Thus, there is no change in the height requirement for fall protection between the existing rule and the proposed revision. OSHA believes that the language and organization for the proposed rule is less complex than that for the existing rule, and, furthermore, the proposed rule provides additional flexibility in the methods used for fall protection, and allows for exceptional conditions. For example, if it is not feasible to install guardrails on the working surface, guardrails are not required provided that access to the working surface is limited to authorized employees. For these reasons, OSHA did not assign costs to this paragraph.

Section 1910.28(b)(2)—Hoist areas. The proposed rule states that fall protection must be provided in hoist areas where the potential fall distance is four feet or greater. OSHA intends for this revised text to clarify the existing requirements for hoist areas found in proposed § 1910.23(b)(1) and § 1910.23(c)(1). Therefore, no costs were assigned to this paragraph.

Section 1910.28(b)(3)—Holes. The existing rule requires guarding for every hole and skylight floor opening. The proposed rule specifies that fall protection is needed when an employee might fall more than four feet. Thus, the new language harmonizes the proposed requirement for fall protection for holes with the proposed requirements for unprotected sides and edges, as well as hoist areas. The new language also permits the requirement to be met by personal fall arrest systems and covers, as well as guardrails. No costs are assigned to this paragraph.

Section 1910.28(b)(4)—Dockboards (bridge plates). This new requirement for guardrails or handrails on dockboards would protect an employee from falls of four or more feet. There is an exception for cases where the dockboards are used exclusively for material handling operations performed with motorized equipment. In these cases, neither guardrails nor handrails are required if the fall hazard is 10 feet or less and the employee has been trained according to proposed § 1910.30.

The costs for installing handrail or guardrail systems for dockboards are discussed later in this subsection. OSHA assigned training costs to proposed § 1910.30.

Section 1910.28(b)(6)—Dangerous equipment. The existing language requires a standard railing and toe board for walking-working surfaces above dangerous equipment. The proposed rule introduces a distinction among required controls according to the potential fall distance. For potential falls of less than four feet onto or into dangerous equipment, the employer has the additional options of covering or guarding the dangerous equipment to eliminate the hazard. For potential falls of four feet or more, the employer has the options of guardrail systems, restraint systems, personal fall arrest systems, or safety net systems. OSHA assumes employers already have implemented controls under the current standard using the least-cost method; therefore, no costs were assigned to this paragraph.

Section 1910.28(b)(7)—Wall openings. For wall openings, the proposed standard limits the need for fall protection to cases where the inside bottom edge of the wall opening is less than 39 inches above the walking-working surface. The employer has the additional options of a safety net system or personal fall arrest system to meet this proposed requirement. OSHA believes that, currently, protection of wall openings is widespread throughout industry. Therefore, no costs were assigned to this paragraph.

Section 1910.28(b)(8)—Repair, service, and assembly pits (pits) less than 10 feet in depth. Pits, in general, were subsumed within the definition of a floor opening in the existing § 1910.21(a)(2). In the proposed standard, pits between 4 feet and 10 feet in depth used for repair, service, and assembly operations need not have a fall protection system provided that a (minimum) 6-foot perimeter is marked around the pit and access to that area is limited to trained and authorized employees. OSHA did not assign incremental costs to this proposed paragraph for two reasons. First, an employer would only incur costs for caution signs and floor markings if they were less expensive than the fall protection system required under the existing regulation. Second, existing § 1910.145 already requires an employer to post caution signs where needed, and existing § 1910.144 describes what is required for marking the signs. OSHA assumed an employer has signs and marking materials available, so no incremental costs are assigned to this paragraph.

The proposed rule for this working surface provides more than one method to comply with the paragraph. That is, an employee may be protected by a conventional fall protection system or by implementing specific safe work practices. Where the alternative method—the use of safe work practices (marking, posting, and limited access)—is less expensive than the method specified in the existing rule (guardrails), an employer might incur lower costs to comply with the paragraph. OSHA anticipates that some employers may encounter reduced costs (cost savings) through this proposed revision; however, OSHA did not quantify cost savings for this preliminary analysis.

Section 1910.28(b)(9)—Fixed ladders. The existing regulatory text specifies cages or wells as means of providing fall protection for fixed ladders. In the 1990 proposal for subpart D, OSHA would have permitted certain fixed ladders to be climbed without the use of ladder safety devices, cages, or wells if qualified climbers were assigned to the task and certain other conditions were met. In particular, qualified climbers could only be used when the ladder was climbed two or fewer times per year, and it would be a greater hazard to the employee to install the fall protection system than to climb the ladder without fall protection (which OSHA believes rarely occurs). In the proposed standard issued today, the use of qualified climbers as an option is limited to the outdoor advertising/billboard industry (*see* discussion on proposed § 1910.28(b)(10)(v), below). However, in addition to cages and wells, the employer will have the added option of meeting the fall protection requirement for fixed ladders through the use of personal fall protection systems. OSHA believes that qualified climbers are not being used in these situations; therefore, no costs were assigned to this paragraph.

Section 1910.28(b)(10)(i), (ii), and (iv)—Outdoor advertising (billboards). This new paragraph addresses fall hazards on outdoor advertising, also known as billboards. Under the language of the existing subpart D, no distinction is made for billboards. However, for analytical purposes, the fixed ladder portion of the billboard could be considered covered under the existing fixed ladder requirements. Under current § 1910.27(d)(1), cages or wells are required for ladders more than 20 feet in length. Under proposed § 1910.28(b)(10)(i), an employee climbing a fixed ladder portion of a billboard up to 50 feet in length needs either a body belt or body harness with an appropriate 18-inch rest lanyard to tie off to the fixed ladder. Presumably, these additional options, where not already deployed, would be less expensive than cages or wells. Any ladder safety system (*i.e.*, a device other than a cage or well, *see* proposed § 1910.21(b)) that is in current use must be maintained (*see* proposed § 1910.28(b)(10)(iv), a requirement that, according to ERG, is consistent with widespread industry practice (ERG, 2007). Thus, OSHA assigned no incremental compliance costs to these paragraphs.

If, however, the fixed ladder portion extends beyond 50 feet, the entire length of the fixed ladder must have ladder safety systems (*see* proposed § 1910.28(b)(10)(ii). Ladder safety systems refer to any device other than a cage or well. Presumably, because the ladder safety systems are generally less expensive than cages or wells (ERG, 2007), ladder safety systems would have replaced cages or wells where the latter do not already exist or are no longer in good working order. Thus, using these industry retrofit activities as the baseline, no incremental compliance costs were assigned by OSHA to the proposed provision for ladder safety systems.

Section 1910.28(b)(10)(iii) and (vi). Proposed § 1910.28(b)(10)(iii) requires the employer to follow inspection procedures for the safety systems. The frequency of inspection is not specified but ERG assumed that inspections would occur prior to each use. Proposed § 1910.28(b)(10)(vi) specifies that the employee is to have both hands free of tools and material while climbing up or down the ladder. Costs were assigned to these two paragraphs and are discussed later in this subsection under COST ESTIMATION.

§ 1910.28(b)(10)(v). This proposed paragraph effectively requires employees who routinely climb fixed portions of billboard ladders that do not have cages or wells to be "qualified" climbers as specified in proposed § 1910.29(h); therefore, costs for this paragraph are assigned to proposed § 1910.29(h). Because of the uncertainties connected with the concept "routinely," OSHA, to estimate costs for this proposed requirement, conservatively assumed that all employees in NAICS 5418 (Advertising and Related Services) who use personal fall protection are trained as qualified climbers (*see* the discussion for proposed § 1910.29(h) below).

§ 1910.28(b)(10)(vii). Under this proposed provision, climbers must be

protected by an appropriate fall protection system when they reach their work positions. The costs for these systems are already considered in the existing requirements for fixed ladder systems. Thus, no additional costs for equipment are assigned to this provision.

§ 1910.28(b)(12)—Scaffolds and rope descent systems. The proposed standard addressing the duty to provide fall protection for employees on scaffolds now refers to § 1926, the construction standards, thus avoiding any inconsistencies between the general industry and construction standards. The proposed revision extends the requirements found in the construction standards to all other industries. Fall protection on scaffolds in § 1926 generally follows consensus standards; thus OSHA assigned zero costs to this paragraph.

Section 1910.28(b)(13)—Walking-working surfaces not otherwise addressed. OSHA considers this new paragraph to be a clarification of the existing § 1910.23(c)(3), which requires a railing and toeboard. The proposed language restricts the requirement to working surfaces 4 feet or more above a lower level and permits the employer to comply with the paragraph by the use of a personal fall protection system. Under the assumptions that employers choose the least-cost compliance option and that current industry practice is widespread, OSHA expects that there will be few if any costs associated with this paragraph.

Section 1910.28(b)(14)—Protection for floor holes. This paragraph provides protection for stairway floor holes, ladderway floor holes, and hatchway and chute floor holes, and updates § 1910.23(a) in current subpart D by incorporating the best practices found in industry consensus standards (notably ANSI/ASSE A1264.1–2007) and clarifying terminology regarding applicability of the provision (e.g., "infrequently"). Furthermore, proposed § 1910.28(b)(14) mandates that guardrail systems must be constructed in accordance with proposed *§ 1910.29, Fall protection criteria.* Because these requirements have been recognized throughout industry either as part of an OSHA standard or industry consensus standards for at least fifteen years, OSHA believes that the incremental cost burden will be minimal. OSHA requests public input on the cost impacts and benefits of the provisions in proposed paragraph § 1910.28(b).

Fall Protection Systems Criteria and Practices (§ 1910.29)

§ 1910.29(b)(15)—Guardrail systems. This new paragraph requires that manila, plastic, or synthetic rope being used for top rails or midrails be inspected "as frequently as necessary" to ensure that it meets the strength requirements. The inspection costs are considered below in the next subsection, *Cost Estimation*.

§ 1910.29(c)—Safety net systems. The proposed criteria for these systems now refer to § 1926, thus avoiding any inconsistencies between general industry and construction standards, and effectively extending the requirements found in the construction standards to most other industries. Given that safety net system requirements in § 1926 follow consensus standards, OSHA anticipates few, if any, incremental compliance costs connected with this proposed requirement.

§ 1910.29(h)—Qualified climbers. This proposed paragraph sets forth the criteria for the use of "qualified climbers" and limits the use of qualified climbers to employees engaged in billboard operations. The costs for this proposed paragraph are those to train and, as necessary, retrain qualified climbers. That is, OSHA assumed that qualified climbers require training beyond that now required for fixed ladders. Additional costs are incurred through the proposed requirement that the employer observe the performance to ensure the qualified climber has the skills necessary to perform the climb safely. These costs are discussed further in the next subsection, *Cost Estimation*.

With respect to other requirements in proposed § 1910.29, including those found in paragraphs (d) Designated areas, (e) Covers, and (f) Handrail and stair rail systems, OSHA believes that existing industry practice, which includes significant widespread compliance with the proposed requirements, will result in minimal incremental cost burden to employers. OSHA requests comment on the reasonableness of this assumption.

Training Requirements (§ 1910.30)

This new section requires that employees in general industry be trained regarding fall and equipment hazards, as well as re-trained when necessary. OSHA assumed that an employer that trains employees in compliance with § 1910.30 would choose to maintain records of the training, and the cost estimates reflect this time commitment on the part of the employer. The training costs estimated for proposed § 1910.30 encompass requirements from other proposed paragraphs that specify that the training must be done in accordance with proposed § 1910.30 (*see* Table V–18 for examples). These costs are discussed in more detail below and are incurred only by the percentage of establishments that do not already provide regular safety training.

Personal Fall Protection Systems (§ 1910.140)

OSHA is proposing that within subpart I of § 1910, a new section, § 1910.140, be added to address personal fall protection equipment. The proposed text for § 1910.140 adds specific design and performance requirements for personal fall protection systems to the existing regulation. In addition, the proposed standard would require that the provisions for hazard assessment found in existing § 1910.132 apply to personal fall protection systems.

Section 1910.140(c)(18). This proposed paragraph would require that personal fall protection systems be inspected prior to each use. Costs for this requirement are discussed below in the next subsection, *Cost Estimation*.

Section 1910.132(d). This existing provision requires an employer to assess the workplace to identify any potential hazards and the need for PPE. Costs associated with hazard assessment required by this proposal are discussed below under proposed § 1910.140, Personal fall protection systems.

Section 1910.132(f). The revision proposed for this existing paragraph would require that—before using personal fall protection systems, and after any component or system is changed—employees must be trained in the application limits of the equipment, proper hook-up, anchoring and tie-off techniques, methods of use, and proper methods of equipment inspection and storage. The costs for the proposed revision are included in the costs for proposed § 1910.30, and are described in further detail below under COST ESTIMATION.

Cost Estimation

This subsection presents OSHA's detailed estimates of the costs, provision by provision, associated with the proposed rule. These compliance costs represent the incremental burden incurred by employers beyond the current baseline of fall-related safety expenditures. OSHA did not attempt to estimate potential cost savings to industry from increased flexibility in meeting specific requirements, such as the use of personal fall protection

systems rather than the currently mandated hand/guardrail systems, even if some of the new alternatives might actually be safer than the currently mandated requirements.[26]

Estimated Compliance Costs by Provision in the Proposed Standard

Labor costs associated with compliance with the proposed standard are generally characterized as additional employer and supervisor time for training and inspection. The number of establishments and employees are taken from *Statistics of U.S. Businesses: 2006.* The number of employees covered by subpart D and subpart I is based on the share of employees employed in building and grounds; construction;[27] installation, maintenance, and repair; production; and material moving occupations as reported by the Bureau of Labor Statistics, *Occupational Employment Statistics* (BLS, 2008). *See* subsection C above for more industry-profile information.

Employee and supervisor wages (*see* Table V–5) are based on data reported by the Bureau of Labor Statistics through their *Occupational Employment Statistics* program (BLS, 2008). OSHA adjusted wages to include the cost of benefits; estimated benefits were based on data from the Bureau of Labor Statistics, *Employer Costs for Employee Compensation*—June 2008 (released September 2008). Current compliance rates are based on OSHA inspection statistics for Fiscal Year 2005 (*see* Table V–13). The percentage of businesses that already provide regular safety training is based on the *National Occupational Exposure Survey* conducted by the National Institute for Occupational Safety and Health (NIOSH, 1988). *See* Table V–20, below.

TABLE V–20—FRACTION OF BUSINESSES PROVIDING REGULAR SAFETY TRAINING

NAICS	Industry	Fraction providing regular safety training
11	Agriculture, Forestry, Fishing, and Hunting	.796
21	Mining (2111 Oil and Gas Extraction)	.751
22	Utilities	.890
31–33	Manufacturing	.855
42	Wholesale Trade	.668
44–45	Retail Trade	.668
48–49	Transportation	.890
51	Information	.664
52	Finance and Insurance	.664
53	Real Estate	.664
54	Professional, Scientific, and Technical Services	.664
55	Management	.664
56	Administrative and Support, Waste Management and Remediation Services	.664
61	Educational Services	.83
62	Health Care	.957
71	Arts, Entertainment, and Recreation	.664
72	Accommodation and Food Services	.664
81	Other Services	.664

Source: ERG, 2007, based on NIOSH, 1988.

General Requirements (§ 1910.22)

Although the underlying hazard of unsafe walking-working surfaces is addressed within various § 1910 requirements, proposed § 1910.22 contains three paragraphs with new requirements:

- § 1910.22(d)(1): Regular and periodic inspection of walking-working surfaces;
- § 1910.22(d)(2): Unsafe conditions must be guarded until repaired; and
- § 1910.22(d)(3): Qualified person must inspect repair.

For the purpose of estimating costs for § 1910.22(d)(1), ERG assumed that a significant percentage of facilities include regular and periodic inspections of walking-working surfaces as part of the general obligation to provide a safe and healthful workplace. ERG used the non-compliance rates for floor-guarding (§ 1910.23 has the highest non-compliance rates, *see* Table V–13) to estimate the number of establishments that need to perform regular and periodic inspections of walking-working surfaces. ERG assumed that a supervisor would spend 15 minutes every quarter making the inspection for a total of 1 hour per year. Based on these unit costs, OSHA estimates that the total annual inspection cost is $15.3 million.

For estimating the costs of proposed § 1910.22(d)(2), ERG assumed that within a year, ten percent of affected establishments would identify an unsafe condition, and furthermore, that it takes an employee 15 minutes to set up the guard mechanism (*e.g.*, cones, barriers, etc.). Incremental material costs are assumed to be negligible in that it is likely that most employers currently stock guard equipment but only occasionally deploy it. Estimated compliance costs for this proposed provision are $0.2 million.

For proposed § 1910.22(d)(3), ERG assumed that it takes 5 minutes for a supervisor or qualified person to inspect the repair of the unsafe condition. Applying this time unit across all affected employers, OSHA estimates that the costs for a supervisor or qualified person to inspect repairs will total $0.1 million ($107,350).

Summing costs for the three paragraphs in proposed § 1910.22(d) with cost impacts, the total estimated cost for compliance with proposed § 1910.22(d) is, after rounding, $15.7 million per year.

[26] The new alternatives are assumed to be at least as effective in employee protection as that provided by the current requirements.

[27] Production employees include those in building and grounds; construction; installation, maintenance, and repair; production; and material moving occupations. It is conceivable that employees in construction and related occupations, even though not employed by establishments in construction industries, might on occasion perform work that would be regulated by OSHA under its construction standards in § 1926. For the purpose of estimating costs, however, ERG assumed that these are employees are covered by the general industry standard.

Ladders (§ 1910.23)

Eight paragraphs within proposed § 1910.23 would provide new requirements for protecting employees from slip, trip, and fall hazards during operations involving ladders. Table V–21 summarizes these proposed requirements, all of which are assumed by OSHA to be addressed in a single training session. In addition, OSHA anticipates that compliance with this proposed provision can be met by informal training and, thus, no administrative costs are included for an employer.

OSHA's Web site includes a Resource Center with a loan program for training videos (OSHA, 2006d). The index lists ten training videos for ladders and stairways with times ranging from five to 19 minutes, for an average of 12 minutes. For the purposes of estimating costs, ERG applied a 15-minute training period for this cost analysis.

TABLE V–21—TRAINING REQUIREMENTS UNDER PROPOSED § 1920.23

Paragraph	Subject
§ 1910.23(b)(11)	When ascending or descending a ladder, the user must face the ladder.
§ 1910.23(b)(12)	Each employee must use at least one hand to grasp the ladder when progressing up and down the ladder.
§ 1910.23(b)(13)	An employee must not carry any object or load that could cause the employee to lose his or her balance and fall.

TABLE V–21—TRAINING REQUIREMENTS UNDER PROPOSED § 1920.23—Continued

Paragraph	Subject
§ 1910.23(c)(5)	Portable single rail ladders must be rigidly supported when used.
§ 1910.23(c)(6)	Ladders must not be moved, shifted, or extended while occupied by employees.
§ 1910.23(c)(10)	The top of a non-self-supporting ladder must be placed with the two rails supported unless it is equipped with a single support attachment. [New for wood ladders.]
§ 1910.23(c)(11)	When portable ladders are used to gain access to an upper landing surface, the ladder siderails must extend at least 3 feet (0.9 m) above that upper landing surface. [New for metal ladders.]
§ 1910.23(c)(13)	Ladders and ladder sections must not be tied or fastened together to provide longer length unless they are specifically designed for such use. (New for wood ladders.)

Source: ERG, 2007.

In ERG's cost model, ten employees are trained per session with one supervisor in attendance. ERG further assumed that $1 in materials cost is incurred for handouts for each employee trained.

Some establishments already provide regular safety training. OSHA applied an estimate for the percentages of establishments that already provide training from the NIOSH *National Occupational Exposure Survey* (NOES) database (NIOSH, 1988). Although the data are over 20 years old, the NIOSH NOES survey is still the primary source for such information and covers a broad range of industries. The proportion of establishments that already offer regular safety training is likely to have increased in the past two decades; hence, the training costs may be overestimated.

The cost to train all the employees at establishments that do not offer regular safety training is a one-time cost that is annualized over a 10-year period at an interest rate of seven percent. Summing across all affected employers, the total first-year cost is $11.2 million, with an annualized cost of $1.6 million.

New employees that enter the workforce would also need training. For the purpose of estimating the cost of the rule, ERG conservatively assumed that training received at a prior place of employment was not considered sufficient to meet the proposed subpart D requirement for the new employer. Based on ERG's analysis of 2003 turnover data collected by the Bureau of Labor Statistics (ERG, 2007, Ex. 6), OSHA applied 2008 BLS industry turnover rate data to the cost analysis. Table V–22 summarizes the data and the NAICS codes to which they are assigned. OSHA assigned the turnover rate for manufacturing to logging (NAICS 1133), oil and gas extraction (NAICS 2111), and information (NAICS 51). Under these assumptions, the estimated cost is $4.3 million per year to train new employees about ladder safety.

TABLE V–22—INDUSTRY TURNOVER RATES APPLIED IN OSHA'S PRELIMINARY COST ANALYSIS

Industry sector	NAICS codes	Turnover rate [a] (percent)
Manufacturing	1133, 2111, 31–33, 51	24.3
Transportation and Public Utilities	22, 48–49	31.5
Wholesale Trade	42	26.1
Retail Trade	44–45	47.1
Finance, Insurance, and Real Estate	52–53	27.2
Service	54–81	47.2

[a] Hires as a percent of total employment.
Source: U.S. Dept. of Labor, OSHA, Directorate of Evaluation and Analysis, Office of Regulatory Analysis, based on ERG, 2007, and Bureau of Labor Statistics. *Job Openings and Labor Turnover Survey, 2008.*

To estimate the costs for ensuring that mobile ladder stands and mobile ladder stand platforms conform with the applicable ANSI standards (*see* the note to proposed § 1910.23(e)), OSHA's cost formula, adopted from ERG's analysis (ERG, 2007, Ex. 6), includes the 6.74 million establishments covered in subpart D, as presented in the industry profile earlier in this PEA. ERG assumed that a typical lifetime for a ladder is five years; thus, one-fifth of the

establishments would purchase a ladder in any given year. Furthermore, ERG assumed that a supervisor from each establishment would take 5 minutes to read ladder specifications to ensure the ladder about to be purchased meets all ANSI 14 requirements for that type ladder. With these assumptions, the estimated annual cost for proposed § 1910.23(e) is $3.8 million.

Step Bolts and Manhole Steps (§ 1910.24)

Step bolts. ERG identified three general cost categories for the requirements addressing step bolts and pole steps:

- Utility poles.
- Communication structures.
- Sports and performance arenas with pole-mounted lights.

Utility poles. According to the *2007 Utility Data Institute Directory of Electric Power Producers and Distributors,* there are 6,297,596 distribution line miles across the United States (Platts, 2007). Of these, the proposed OSHA rule would concern the overhead (as opposed to underground) line miles. According to ERG, the most recent estimate available for the overhead distribution system is 4.1 million line miles in 1996, about two-thirds of total line miles (NCAMP, 1997). Considering the maturity of the electric power industry in the United States, ERG assumed that there has not been a significant amount of new line miles built in the past decade, and of the new lines miles, there probably has been a trend to build the lines underground. Assuming one utility pole every 100 feet, ERG estimated that there are 216,480,000 utility poles across the United States. According to a recent highway safety study, this estimate is 2.5 times the number of reported utility poles on highways in 1999, and therefore this estimate appears to be reasonable (NCHRP, 2004). Assuming 1 percent of the poles are climbed each year and 1 minute is taken for inspection of the step bolts, the estimated annual cost is $1.5 million.

Communication structures. ERG estimates that there are roughly 190,000 fixed ladder structures in the communications industry (*see* ERG, 2007, Appendix A, Ex. 6). This estimate encompasses communication structures with fixed ladders and step bolts. Fixed ladders, however, have an existing requirement for inspection while step bolts do not. To narrow the estimate to fixed ladders with step bolts, ERG searched an FCC database (Antenna Structure Registration (ASR)) and determined that most communication structures meet at least one of the following criteria:

- Height is 200 feet or greater.
- Height <199 feet if within 5 miles of an airport and fails the glide calculation (part 17 requirement).
- Height of the extension (*e.g.,* beyond the building roof) is 20 feet or more.

ERG assumed that these structures are more likely to have fixed ladders rather than step bolts. As of May 2007, there were approximately 93,000 structures in the ASR database. Communication structures that are not in the ASR database are smaller and, thus, more likely to have step bolts. ERG assumed that the difference between the total number of structures (190,000) and the number in the ASR database (93,000) would represent the number of structures that could potentially have step bolts. ERG assumed that the 97,000 structures with step bolts are climbed once a year and that one minute is spent inspecting the structure before it is climbed. These unit estimates resulted in an annual cost of $0.050 million for NAICS 51 (Information).

Sports and performance arenas. According to a recent census, there are 1,699 promoters of performing arts, sports, and similar events with facilities (Census, 2002). ERG was unable to estimate the number of step bolts at each facility, but assuming that one hour per year is dedicated to inspecting all step bolts at each facility, ERG calculated that annual costs would total $0.034 million for NAICS 7113 (promoters of performing arts, sports, and similar events with facilities).

Summing costs for utility poles, communication structures, and sports and performance arenas, OSHA estimated that the total annual inspection cost for step bolts would be $1.54 million. OSHA requests comment on the extent to which visual inspection of step bolts is currently conducted in the telecommunications and electric utility industries, and in sports and performance arenas. OSHA, in addition, requests comment on the assumptions underlying its analysis of costs, as well as information on the potential impacts of the proposed revision to the requirements to safely climb surfaces with step bolts.

Manhole steps. ERG estimates there are between 6.6 and 13.2 million manholes, with a mid-point estimate of 9.9 million manholes (ERG, 2007, Ex. 6). Of these manholes, approximately 85 percent, or 8.4 million manholes, are 20 feet or less in depth and, therefore, the majority would use steps or portable ladders instead of fixed ladders. By way of simplification, ERG assumed that 10 percent of all manholes 20 feet or less would be entered once a year, on average, and that it would take one minute to inspect the steps prior to entering the manhole. These assumptions resulted in an annual cost of $2.1 million for the industry that would be primarily affected, NAICS 2213 (water, sewage, and other systems).

Other industries also use manholes for access, such as the electric power generation, transmission, and distribution (NAICS 2211) and natural gas distribution (NAICS 2212). ERG, however, had no data on the number of manholes for those industry groups, but OSHA presumes that the costs would be proportional to the number of manholes that are estimated for water and sewage systems. OSHA was not able to estimate costs for NAICS 2211 and 2212, and, therefore, requests public comment on the impact of the requirement for inspecting manhole steps on these and any other affected industries.

The incremental costs for the provision of slip-resistant and corrosion-resistant manhole step surfaces would be incurred in the future as manholes with steps are replaced at the end of their useful life. As described above, there are 9.9 million manholes, of which 85 percent are 20 feet or less in depth and 15 percent are more than 20 feet in depth. The manholes less than 20 feet are assumed to have a uniform distribution in the use of portable ladders, fixed ladders, and steps, resulting in 2.9 million manholes with steps. The manholes 20 feet or more in depth are assumed to have a uniform distribution between fixed ladders and steps, resulting in 0.7 million manholes with steps. Therefore, 3.6 million manholes are considered as the universe affected by the proposed requirement. The most expensive step found has a per-unit cost of $8.50, and it is assumed that this includes a 10 percent premium to ensure the steps meet the proposed requirements (ERG, 2007, Ex. 6).

OSHA estimated annual step replacement costs by assuming that 10 percent of the manholes are entered each year, and of those 10 percent have a failed rung. At the incremental cost of $0.85 each (10 percent of $8.50 per rung), the estimated annual step replacement cost is $0.03 million. Annual manhole replacement costs are estimated assuming 5 percent of manholes need to be replaced a year and that steps are installed every 16 inches. The estimated annual manhole replacement cost is $1.7 million.

Scaffolds and Rope Descent Systems (§ 1910.27)

Training. Cost for any training beyond what is done as a result of the 1991 OSHA memorandum on descent control devices are attributed to proposed § 1910.30 (*see* below).

Sound anchorages. To provide assurances that an anchorage is sound, assigned costs involved: (1) A qualified/competent person who would inspect the rigging and anchorages on buildings annually, and (2) a professional engineer who would certify the soundness of the rigging and anchorages every 10 years.

According to an industry expert contacted by ERG, an estimated 3.0 million window-cleaning descents take place annually at 750,000 buildings (ERG, 2007, Ex. 6). Using data collected by the Department of Energy (DOE) for surveys on energy use, ERG compared this estimate with the number of commercial and residential buildings with four or more floors. The *2003 Commercials Buildings Energy Consumption Survey* identified about 140,000 commercial buildings nationwide (DOE, 2006). The *2001 Residential Energy Consumption Survey* identified about 2.4 million apartment buildings with 5 to 10 floors, 0.9 million apartment buildings with 11 to 20 floors, and an unspecified number of buildings with more than 20 floors (DOE, 2004). Summing the three categories of residential buildings, ERG estimated that there are approximately 3.3 million residential buildings with at least 5 or more floors.

If it is assumed that each commercial building has its windows cleaned annually, that would account for 140,000 of the estimated 750,000 cleanings per year. If the remaining 610,000 cleanings are distributed over the 3.3 million residential buildings, each building would, on average, have its windows cleaned every five to six years.

ERG's industry expert estimated that a minimum of 20 percent of the building owners comply with the inspection standard and that the number is increasing. However, comments submitted to the Agency in response to the 2003 reopening presented a wide range of perspectives on the likelihood that building owners inspect their anchorages on a periodic basis. Amodeo (2003) noted that some clients view ANSI I–14.1 as voluntary and resist having inspections. Kreidenweis (2003) commented that few buildings are inspected by an engineer. In contrast, Lebel (2003) shared the view that many buildings have a roof plan and identified anchorages certified by a professional engineer. Zeolla (2003) stated that most buildings that have invested in anchors are performing the inspections.

If, as estimated by ERG, 75 percent of the approximately 750,000 buildings that are cleaned each year will be affected by the change from a voluntary requirement to a mandatory requirement, then OSHA estimates that 562,500 buildings would require annual inspections and decennial certifications. ERG further assumed that the annual inspections would be performed by a production supervisor ($29.73/hour) and that it would take one hour to perform the inspection. Annual costs for the building inspections would total $16.7 million.

Table V–23 summarizes the range in costs for a professional engineer to certify building anchorages; cost estimates were drawn from comments in the record. The estimates are adjusted to 2003 dollars using as the deflator the *Consumer Price Index—All Urban Consumers* (BLS, 2007). The costs range from a low of $175 to a high of $2,500, and probably represent the range in the size of buildings, complexity of anchorage arrangements, and regional standards. The median value is $1,000.

TABLE V–23—ESTIMATED COST FOR THE CERTIFICATION OF BUILDING ANCHORAGES

Source	Estimated cost			Estimated cost (2003 dollars)	
	Low	High	Year	Low	High
Bright, 2007	$300	$1,500	2006	$274	$1,369
Kreidenweis, 2003	1,000	2,500	2003	1,000	2,500
Lebel, 2003	175	1,000	2003	175	1,000
Wright, 2003	400	.....	2003	400	.....

Source: ERG, 2007.

Assuming, as indicated earlier, that building anchorages would be certified every ten years, OSHA estimates that 56,250 buildings (one-tenth of 562,500 buildings certified annually) would need anchorage certification every year. At an average cost of $1,000 for certification, annual costs for anchorage certification would total $56.3 million.

Summing costs for inspecting and certifying building anchorages, OSHA estimates that annual costs for ensuring that building anchorages are sound, as required by proposed § 1910.27(b)(2)(iv), would total $73.0 million.

Duty To Have Fall Protection (§ 1910.28)

Table V–24 lists the requirements in this proposed section that are likely to create new cost burdens on employers. The following discussion presents, by requirement, the details of OSHA's cost analysis for this section.

General protection. Proposed § 1910.28(a)(2) covers all walking-working surfaces and specifies that walking-working surfaces must have the strength and structural integrity to support employees safely. As discussed earlier in this cost subsection, the proposed general requirements (§ 1910.22) provide for the periodic and regular inspection of walking-working surfaces by employers to ensure that the surfaces are in a safe condition for employees to use. Proposed § 1910.28(a)(2) provides further detail as to what should be considered in the inspection of surfaces. Thus, OSHA believes that the costs for the inspections required by proposed § 1910.28(a)(2), are included in the costs estimated for general inspection in proposed § 1910.22(d), described earlier.

Dockboards (bridge plates). Proposed § 1920.28(b)(4) would require that guardrails or handrails be installed to protect employees on dockboards from falls of four feet or more to a lower level. Employers with dockboards having maximum heights that are less than four feet would not incur costs under this paragraph. Dockboards presenting a fall hazard of four feet up to ten feet are exempted from the hand/guardrail requirement if the ramp is used exclusively for material handling operations with motorized equipment. To qualify for the exception, employees

need to be trained. Training costs for this provision are discussed later in this section.

TABLE V–24—NEW REQUIREMENTS IN § 1910.28, DUTY TO HAVE FALL PROTECTION

Paragraph	Subject
§ 1910.28(a)(2)	Employer must ensure that walking-working surfaces have the strength and structural integrity to safely support employees.
§ 1910.28(b)(4)(i)	Installation of guardrails and handrails on dockboards (bridge plates).
§ 1910.28(b)(4)(ii)	Fall protection training required for dockboards, in accordance with § 1910.30, including proper placement and securing of dockboards, securing of vehicles, and proper use of material handling equipment.
§ 1910.28(b)(10)(iii)	Inspection of safety systems on fixed ladders used in outdoor advertising.
§ 1910.28(b)(10)(v) and (vi)	Employees that routinely climb the fixed ladder portions of a billboard must be a "qualified climber" and must have both hands free of tools or material when ascending or descending a ladder. Costs associated with this training are assigned to proposed § 1910.29(h).

Source: U.S. Dept. of Labor, OSHA, Office of Regulatory Analysis, 2007.

ERG judged that a substantial proportion of dockboards would either not incur costs due to height or be able to use the exception. Thus, OSHA anticipates that any costs incurred under this provision are unlikely to be substantial. OSHA requests comment on the potential impacts associated with the duty to protect employees on dockboards from falls.

Outdoor advertising. Based on discussions with the Outdoor Advertising Association of America, ERG estimated that the number of billboards with fixed ladders over 20 feet is approximately 20,500 (ERG, 2007, Ex. 6). Billboards are climbed anywhere from one to more than 12 times a year, whenever the copy is changed. For the purpose of estimating costs, ERG assumes that billboards are climbed an average of six times a year, totaling 123,000 climbs (20,500 billboards × 6 climbs). Each time a billboard is to be climbed, the employee takes two minutes to inspect the ladder safety system (246,000 minutes or 4,100 hours). Employees who climb billboards are generally found in NAICS 5418 (Advertising and Related Services). In 2008, the average wage including benefits for this category was $21.39/hr. Thus, the estimated cost to comply with the provision for inspection of ladder safety systems on billboards will total approximately $88,000 per year.

As specified in proposed § 1910.28(b)(10)(v) and (vi), employees that routinely climb the fixed ladder portions of a billboard must satisfy the criteria for "qualified climbers" found in proposed § 1910.29(h), must undergo training and demonstrate the capacity to perform the necessary climbs safely, and must have both hands free of tools or material when ascending or descending a ladder. For the purpose of estimating costs, ERG assumed that all employees who climb billboards are "qualified climbers" and that the training for a qualified climber includes the instruction to have both hands free while ascending or descending the ladder (*see* proposed § 1910.29(h)(2)). For this preliminary cost analysis, OSHA assigned the costs to train a qualified climber under proposed paragraphs § 1910.28(b)(10)(v) to § 1910.29(h).

Fall Protection Systems Criteria and Practices (§ 1910.29)

For proposed § 1910.29, two requirements are expected to impose significant new burdens on employers. Below are details of OSHA's approach to estimating costs for this section of the proposed standard.

Inspection of manila, plastic, and synthetic rope. The proposed regulatory text for § 1910.29(b)(15), requiring the inspection of manila, plastic, or synthetic rope being used as rails, specifies that the inspections must be done as frequently as necessary to ensure the strength requirement is met. The estimated inspection cost, then, would be the product of the:

- Number of guardrail systems;
- Proportion that use manila, plastic, or synthetic rope used as toprails or midrails;
- Number of inspections per year;
- Time required for each inspection (hours); and
- Average wage per inspector per industry ($/hr.).

At this time, OSHA lacks data on the proportion of guardrail systems that use manila, plastic, or synthetic rope as top rails or midrails. However, OSHA considers it likely that the inspection of these alternate materials for toprails and siderails would form part of the inspections performed under proposed § 1910.22, the general inspection of walking-working surfaces for safety. That is, proposed § 1910.29(b)(15) provides a detail to be included in the inspection for those workplaces that use manila, plastic, or synthetic rope as top rails or midrails. Therefore, OSHA allocated no additional costs to this provision.

Qualified climbers. Proposed paragraph § 1910.29(h) concerns the outdoor advertising/billboard industry. "Qualified climbers" are an option open only to this industry. Qualified climbers must:

- Have climbing duties as one of their routine work activities (proposed § 1910.29(h)(4));
- Be physically capable of performing the climbing duties (proposed § 1910.29(h)(1));
- Undergo training or an apprenticeship program (proposed § 1910.30(h)(2)); and
- Be retrained as necessary (proposed § 1910.30(h)(2)).

Employers are required to ensure that a qualified climber has the skill to safely perform the climb by using (1) performance observations throughout the training, and either formal classroom or on-the-job training; or (2) performance observations once the climber has had formal classroom training, or ensuring the skill of the qualified climber through on-the-job training. In the second option, the employer does not need to personally observe the climber. In ERG's cost model, a combination of employer performance observation and classroom training—as found in the first option—contributes to the proper preparation of employees.

For the purposes of estimating costs, ERG assumed that 90 percent of the employees in the outdoor advertising industry who climb have been trained as qualified climbers. Thus, there would be one-time costs associated with qualifying the remaining ten percent of climbers. These costs are annualized over ten years at a rate of seven percent. In addition, the industry incurs annual costs for:

- Employer performance observation;
- Training of new employees;

• Retraining of employees as necessary; and

• Administrative costs to document training and re-training.

For the purpose of estimating one-time costs, ERG estimated that ten percent of the total number of employees who perform construction, installation, maintenance, and repair operations in NAICS 5418 (advertising and related services) (or 713 out of 7,132 employees) would need to undergo training to be qualified climbers.

The National Association of Tower Erectors has developed a climber training standard with varying levels of expertise (authorized, competent, and competent rescuer), but does not offer training itself (NATE, 2006). The OSHA Web site lists a 4-day training session in fall arrest systems for $750. Commercial courses in fall protection searched on the Web range from one to five days with costs ranging from $500 to $2,500 per course (ERG, 2007, Ex. 6). The prices include materials and the trainer's time. For the purposes of estimating costs, ERG assumed that the requirements in the proposed standard could be met by a 4-day training course, at a cost of $1,500 plus the employee's time ($684, based on an average wage of $21.39/hr and 32 hours), for a total of $2,184. Furthermore, administrative tasks to document the training are assumed to be 15 minutes of a supervisor's time for every ten employees trained. In all, OSHA estimates that the one-time cost to qualify the estimated 713 climbers would be $1.56 million, and the annualized cost is $0.22 million per year.[28]

For the purposes of estimating the annual costs associated with this proposed paragraph, ERG applied the following unit estimates and assumptions:

• A supervisor observes each of the estimated 7,132 qualified climbers for 15 minutes per quarter or 1 hour per qualified climber per year;

• A supervisor spends 15 minutes per year per qualified climber on administrative tasks for training and re-training;

• Ten percent of the climbers need re-training;

• Retraining consists of an 8-hour refresher course at a cost of $500; and

• The turnover rate is 47 percent.

Based on ERG's analysis (ERG, 2007, Ex. 6), OSHA estimates that the annual cost would be $8.2 million, of which $7.4 million is due to the need to train new hires.[29] OSHA requests comment on the assumptions and unit cost estimates applied to its analysis of costs for qualified climber training.

Training Requirements (§ 1910.30)

Fall hazards and equipment hazards. Proposed § 1910.30(a) addresses training with respect to fall hazards. The training must be:

• Conducted by a qualified person;

• Include the nature of fall hazards in the workplace;

• Include the correct procedures for erecting, maintaining, disassembling, and inspecting the fall protection system used; and

• Include the use and operation of guardrail systems, personal fall protection systems, safety net systems, warning lines used in designated areas, and other (unspecified) protection to be used.

Proposed § 1910.30(b) addresses training with respect to equipment hazards. In particular, employees must be trained in the proper:

• Care, use, and inspection of equipment covered by subpart D before their use in accordance with recognized industry practices and manufacturers' recommendations;

• Placement and securing of dockboards to prevent unintentional movement; and

• Rigging and safe use of rope descent systems.

The costs for the training allocated under proposed § 1910.27(b)(2)(ii) (rope descent systems) and § 1910.28(b)(4) (duty to have fall protection: dockboards) are included in the cost estimate for proposed § 1910.30.

In a previous analysis, ERG estimated the number and percent of employees by industry that use personal protective equipment such as body belts and/or body harnesses (ERG, 1999, Ex. OSHA–S042–2006–0667–0318). ERG then applied these industry-specific percentages to the number of at-risk employees in 2008 to estimate the number of employees that need the type of training required under proposed § 1910.30.

Some companies already provide this training. ERG used data from the NOES survey to estimate, by NAICS code, the level of training that is already provided at the baseline.

For the purpose of estimating costs, ERG assumed that all employees that have not already been trained and use personal fall protection systems would undergo six hours of training on fall hazards and equipment hazards to address the requirements in proposed §§ 1910.30(a) and 1910.30(b)(1).

Employees in the utility, sewage, and communications industry sectors (NAICS 2211–2213 and 5121–5191) are assumed to undergo an additional half-day of training to specifically address the proposed requirements for step bolts (thus, a total of 10 hours of training). Similarly, employees in NAICS codes 4881 through 4884 (support activities for transportation by air, rail, water, and road, respectively) are assumed to undergo a half-day of training specifically to address requirements for dockboards. Window washers, found in NAICS 5617 (services to buildings and dwellings), are assumed to have an entire day devoted to training on rope descent systems (thus, a total of 14 hours of training).

As specified in the proposed standard, training would be provided by a qualified person. For the purpose of estimating costs, ERG assumed that the trainer conducts the training at the workplace, for a fee of $500 per day. The training fee includes instruction, travel, lodging, and per diem expenses, as well as hand-out materials. This fee is incurred per every 10 employees (*i.e.,* class size is limited to 10 people). A supervisor is assumed to spend 15 minutes per employee per year in administrative costs to maintain and update training records.

The estimated total one-time cost for proposed § 1910.30(a) and (b) is $81.5 million. This cost is annualized over ten years at an interest rate of seven percent. The annualized cost is $11.6 million. There is also an annual cost due to the need to train new employees. The BLS turnover rates are applied to estimate the annual number of new employees that need training. The estimated annual cost is $28.1 million.

Retraining. Proposed § 1910.30(c) concerns the need to retrain employees whenever the employer has reason to believe that retraining is required for safety purposes. This need can occur through such circumstances as changes in the workplace, fall protection systems, or fall protection equipment that render previous training invalid; or the discovery that employee knowledge or use of fall protection systems or equipment is no longer adequate. ERG assumed that retraining already occurs at establishments that have training programs in place. For the remaining employees, ERG assumed that five percent require retraining in any given year. The retraining course is assumed to be a 1-hour supervisor-led refresher course that focuses on the areas in

[28] Employers may offer on-the-job training and would presumably do so if the costs are less than that for commercial training. Thus, the estimated costs presented here may be conservatively high.

[29] OSHA presumes that a qualified climber could not bring his or her accreditation if he or she changes companies.

which the employee is deficient. Estimated costs for retraining would total $4.4 million.

Subpart I—Personal Protective Equipment

PPE inspection. Proposed § 1910.140(c)(18) would require that personal fall protection systems be inspected before each use for mildew, wear, damage, and other deterioration and that defective components be removed from service. For the purposes of estimating costs, ERG assumed that each employee who wears a personal fall protection system does so at the beginning of every work week, the employee works 50 weeks per year, and the inspection takes about one minute. The associated inspection cost is approximately $7.3 million per year.

Hazard assessment. Proposed § 1910.132(d) requires an employer to assess the workplace to determine if hazards are present or are likely to be present. ERG assumed that the amount of time needed by an employer to walk around the establishment, assess the potential hazard, and determine the appropriate PPE and training needed by the employees would vary with the size of the establishment. ERG used the number of employees as an indicator of establishment size. The time required for the hazard assessment was estimated as:

- 1 to 19 employees: 1 hour.
- 20 to 99 employees: 2 hours.
- 100 to 499 employees: 3 hours.
- 500+ employees: 4 hours.

Furthermore, ERG assumed that:

- All establishments in the forestry, oil and gas, utility, manufacturing, and transportation sectors (NAICS 1131 through 3399 and 4811 through 4931) would undertake a hazard assessment because of perceived risks;
- Half the establishments in wholesale and retail sales (NAICS 4231 through 4543) would undertake a hazard assessment; and
- One-quarter of the establishments in the service industries (NAICS 5111 through 8139) would undertake a hazard assessment.

This analysis results in a one-time cost of $79.0 million which can also be expressed as an annualized cost of $11.3 million.

PPE training. Proposed § 1910.132(f) requires that employees be trained prior to using PPE in the workplace. The costs for this paragraph are included in the costs for proposed § 1910.30, described earlier.

Cost Summary

Tables V–25 through V–27 summarize the costs by industry for each paragraph in the proposed standard. Table V–25 lists the first-year costs. These costs are incurred once to bring the employee population into compliance with the new requirements. For the purpose of evaluating impacts, these one-time costs are annualized over a 10-year period at an interest rate of 7 percent. Total first-year costs are $173.3 million; annualized, the costs for the first year total $24.7 million.

Table V–26 lists the recurring costs, such as inspections and training new employees. These costs are incurred annually and are estimated at $148.5 million. Table V–27 lists the annual costs to industry, that is, the sum of the recurring costs and the annualized one-time costs. The cost to industry is estimated at $173.2 million.

Listing annualized costs in descending order by section of the rule, OSHA projects that the most costly provisions are associated with scaffolds ($73.0 million), training programs ($44.1 million), and fall protection equipment criteria ($18.5 million). For scaffolds, proposed § 1910.27(b)(2)(iv) requires that employers use proper rigging, including sound anchorages and tiebacks. As described earlier in this cost analysis, OSHA interpreted this provision as implying that periodic inspections and certifications of building anchorages would be scheduled to ensure compliance.

Because of the inherent risk involved with cleaning windows of office buildings and other tall structures while suspended on scaffolds or other devices (*see* Table V–6 for the number of reported fatalities in NAICS 561, Administrative and Support Services), the issue of proper safety during window cleaning was raised by OSHA in the 2003 notice that reopened the rulemaking record. In this notice, OSHA requested comment on the hazards associated with window cleaning and the safe practices that have been recommended and implemented through the use of rope decent systems (controlled descent devices) (68 FR 23534). OSHA's analysis of the costs of ensuring sound anchorages and rigging, described above and in the ERG report (ERG, 2007, Ex. 6), is based upon the experiences and observations of the industry representatives who responded to OSHA's request for comment in 2003. In this current rulemaking, OSHA requests that interested parties review the details of OSHA's analysis of costs for scaffolds in this PEA and submit comments into the record.

BILLING CODE 4510–29–P

Table V-25
First-Year Costs for the Proposed Standard on Walking-Working Surfaces, by Paragraph and Industry

NAICS	Title	One-Time Compliance Costs								
		§1910.22	§1910.23	§1910.24	§1910.27	§1910.28	§1910.29	§1910.30	§1910.140	Total
		General Require-ments	Ladders	Step Bolts and Manhole Steps	Scaffolds	Duty to Have Fall Protection	Fall Protection Systems Criteria and Practices	Training Program	Fall Protection	
11	Agriculture, Forestry, Fishing, and Hunting	$0	$4,164	$0	$0	$0	$0	$43,820	$269,943	$317,926
21	Mining	$0	$48,788	$0	$0	$0	$0	$1,214,765	$296,331	$1,559,885
22	Utilities	$0	$265,307	$0	$0	$0	$0	$3,380,676	$1,311,927	$4,957,910
31-33	Manufacturing	$0	$1,046,543	$0	$0	$0	$0	$12,884,562	$10,563,281	$24,494,386
42	Wholesale Trade	$0	$1,097,066	$0	$0	$0	$0	$13,293,324	$6,876,607	$21,266,997
44-45	Retail Trade	$0	$2,121,579	$0	$0	$0	$0	$11,440,878	$18,334,661	$31,897,117
48-49	Transportation	$0	$267,530	$0	$0	$0	$0	$4,547,407	$7,242,704	$12,057,641
51	Information	$0	$995,945	$0	$0	$0	$0	$13,132,793	$2,392,214	$16,520,952
52	Finance and Insurance	$0	$33,443	$0	$0	$0	$0	$299,968	$5,236,091	$5,569,502
53	Real Estate	$0	$917,898	$0	$0	$0	$0	$1,201,459	$2,987,784	$5,107,140
54	Professional, Scientific, and Technical Services	$0	$415,543	$0	$0	$0	$1,558,736	$5,409,069	$5,484,545	$12,867,893
55	Management of Companies and Enterprises	$0	$233,546	$0	$0	$0	$0	$1,844,184	$800,863	$2,878,593
56	Administrative and Support, Waste Management and Remediation Services	$0	$1,384,869	$0	$0	$0	$0	$5,749,091	$2,577,391	$9,711,351
61	Educational Services	$0	$70,848	$0	$0	$0	$0	$0	$559,706	$630,554
62	Health Care	$0	$39,844	$0	$0	$0	$0	$961,291	$5,339,931	$6,341,067
71	Arts, Entertainment, and Recreation	$0	$179,477	$0	$0	$0	$0	$0	$783,592	$963,069
72	Accommodation and Food Services	$0	$192,938	$0	$0	$0	$0	$1,555,767	$3,931,313	$5,680,019
81	Other Services	$0	$1,892,680	$0	$0	$0	$0	$4,491,560	$4,049,993	$10,434,234
Total		**$0**	**$11,208,008**	**$0**	**$0**	**$0**	**$1,558,736**	**$81,450,614**	**$79,038,878**	**$173,256,236**

Source: U.S. Dept. of Labor, OSHA, Directorate of Evaluation and Analysis, Office of Regulatory Analysis, based on ERG, 2007.

Table V-26
Recurring Costs for the Proposed Standard on Walking-Working Surfaces, by Paragraph and Industry

NAICS	Title	Recurring Compliance Costs								
		§1910.22	§1910.23	§1910.24	§1910.27	§1910.28	§1910.29	§1910.30	§1910.140	
		General Requirements	Ladders	Step Bolts and Manhole Steps	Scaffolds	Duty to Have Fall Protection	Fall Protection Systems Criteria and Practices	Training Program	Fall Protection	Total
11	Agriculture, Forestry, Fishing, and Hunting	$45,515	$8,676	$0	$0	$0	$0	$12,130	$4,327	$70,648
21	Mining	$33,710	$18,054	$0	$0	$0	$0	$314,099	$128,244	$494,107
22	Utilities	$75,697	$97,469	$3,572,780	$0	$0	$0	$1,164,418	$230,200	$5,140,564
31-33	Manufacturing	$1,330,596	$454,740	$0	$0	$0	$0	$3,536,088	$1,275,360	$6,596,784
42	Wholesale Trade	$2,162,313	$545,528	$0	$0	$0	$0	$3,892,337	$1,292,804	$7,892,982
44-45	Retail Trade	$3,036,540	$1,578,974	$0	$0	$0	$0	$6,239,105	$1,069,263	$11,923,883
48-49	Transportation	$723,861	$217,350	$0	$0	$0	$0	$1,534,471	$452,288	$2,927,970
51	Information	$685,276	$357,887	$49,756	$0	$0	$0	$3,996,658	$872,127	$5,961,704
52	Finance and Insurance	$462,230	$277,522	$0	$0	$0	$0	$94,483	$27,268	$861,503
53	Real Estate	$428,747	$499,135	$0	$0	$0	$0	$701,322	$113,143	$1,742,347
54	Professional, Scientific, and Technical Services	$1,779,896	$725,699	$0	$0	$87,711	$8,157,986	$2,714,844	$547,687	$14,013,823
55	Management of Companies and Enterprises	$105,733	$141,684	$0	$0	$0	$0	$960,136	$185,283	$1,392,836
56	Administrative and Support, Waste Management and Remediation Services	$693,363	$860,299	$0	$72,971,664	$0	$0	$3,107,470	$440,608	$78,073,405
61	Educational Services	$155,261	$79,649	$0	$0	$0	$0	$27,333	$0	$262,244
62	Health Care	$1,431,364	$445,577	$0	$0	$0	$0	$469,695	$87,801	$2,434,438
71	Arts, Entertainment, and Recreation	$252,535	$160,022	$34,412	$0	$0	$0	$73,242	$0	$520,212
72	Accommodation and Food Services	$939,965	$371,578	$0	$0	$0	$0	$810,797	$133,191	$2,255,532
81	Other Services	$1,358,437	$1,298,336	$0	$0	$0	$0	$2,853,549	$422,080	$5,932,403
Total		**$15,701,040**	**$8,138,180**	**$3,656,949**	**$72,971,664**	**$87,711**	**$8,157,986**	**$32,502,177**	**$7,281,676**	**$148,497,383**

Source: U.S. Dept. of Labor, OSHA, Directorate of Evaluation and Analysis, Office of Regulatory Analysis, based on ERG, 2007.

Table V-27
Annualized Costs for the Proposed Standard on Walking-Working Surfaces, by Paragraph and Industry

NAICS	Title	Annualized Compliance Costs								
		§1910.22	§1910.23	§1910.24	§1910.27	§1910.28	§1910.29	§1910.30	§1910.140	
		General Requirements	Ladders	Step Bolts and Manhole Steps	Scaffolds	Duty to Have Fall Protection	Fall Protection Systems Criteria and Practices	Training Program	Fall Protection	Total
11	Agriculture, Forestry, Fishing, and Hunting	$45,515	$9,269	$0	$0	$0	$0	$18,369	$42,760	$115,913
21	Mining	$33,710	$25,000	$0	$0	$0	$0	$487,054	$170,435	$716,200
22	Utilities	$75,697	$135,243	$3,572,780	$0	$0	$0	$1,645,750	$416,989	$5,846,459
31-33	Manufacturing	$1,330,596	$603,744	$0	$0	$0	$0	$5,370,560	$2,779,333	$10,084,234
42	Wholesale Trade	$2,162,313	$701,725	$0	$0	$0	$0	$5,785,007	$2,271,879	$10,920,924
44-45	Retail Trade	$3,036,540	$1,881,040	$0	$0	$0	$0	$7,868,029	$3,679,706	$16,465,315
48-49	Transportation	$723,861	$255,440	$0	$0	$0	$0	$2,181,920	$1,483,486	$4,644,707
51	Information	$685,276	$499,687	$49,756	$0	$0	$0	$5,866,472	$1,212,725	$8,313,915
52	Finance and Insurance	$462,230	$282,284	$0	$0	$0	$0	$137,192	$772,769	$1,654,475
53	Real Estate	$428,747	$629,823	$0	$0	$0	$0	$872,383	$538,536	$2,469,489
54	Professional, Scientific, and Technical Services	$1,779,896	$784,863	$0	$0	$87,711	$8,379,915	$3,484,973	$1,328,563	$15,845,921
55	Management of Companies and Enterprises	$105,733	$174,936	$0	$0	$0	$0	$1,222,706	$299,308	$1,802,683
56	Administrative and Support, Waste Management and Remediation Services	$693,363	$1,057,474	$0	$72,971,664	$0	$0	$3,926,011	$807,570	$79,456,082
61	Educational Services	$155,261	$89,737	$0	$0	$0	$0	$27,333	$79,689	$352,021
62	Health Care	$1,431,364	$451,250	$0	$0	$0	$0	$606,561	$848,088	$3,337,263
71	Arts, Entertainment, and Recreation	$252,535	$185,576	$34,412	$0	$0	$0	$73,242	$111,566	$657,331
72	Accommodation and Food Services	$939,965	$399,048	$0	$0	$0	$0	$1,032,304	$692,922	$3,064,239
81	Other Services	$1,358,437	$1,567,811	$0	$0	$0	$0	$3,493,047	$998,708	$7,418,003
Total		**$15,701,040**	**$9,733,948**	**$3,656,949**	**$72,971,664**	**$87,711**	**$8,379,915**	**$44,098,912**	**$18,535,034**	**$173,165,173**

Source: U.S. Dept. of Labor, OSHA, Directorate of Evaluation and Analysis, Office of Regulatory Analysis, based on ERG, 2007.

BILLING CODE 4510–29–C

G. Economic Impacts

Introduction

OSHA has determined that the costs of complying with the requirements of the proposed revisions to subparts D and I will not impose adverse economic impacts on employers in the industries affected by the rule. The costs imposed by the standard are modest, and the increased safety and reduction in injuries and fatalities associated with the standard will ultimately reduce employers' direct and indirect costs. This preliminary analysis of economic impacts is based on industry data described above in section *C,* Profile of Affected Industries, Firms, and Workers, the cost analysis presented in section E, Costs of Compliance, and analysis by OSHA's contractor, ERG (ERG, 2007, Ex. 6).

OSHA's preliminary impacts are summarized in Table V–28 for the two-digit NAICS industry groups affected by the proposed standard. "Minimum" and "Maximum" refer to the lowest and highest costs among the four-digit NAICS industries categorized within the two-digit group. The following section discusses OSHA's methodology for assessing the significance of the impacts at the aggregate level presented in Table V–29 and at levels of greater industry detail.

Economic Screening Analysis

To determine whether the proposed rule's projected costs of compliance would raise issues of economic feasibility for employers in affected industries, i.e., would adversely alter the competitive structure of the industry, OSHA first compared compliance costs to industry revenues and profits. OSHA then examined specific factors affecting individual industries where compliance costs represent a significant share of revenue, or where the record contains other evidence that the standard could have significant impact on the competitive structure of the industry.

As noted, OSHA examined the potential impacts of the proposed standards rule two ways—as a percentage of revenues and as a percentage of profits. The estimated average receipts and profits by establishment and industry are presented in the Table V–29. Applying the methodology employed by ERG (ERG, 2007, Ex. 6), OSHA estimated 2006 receipts based on 2002 receipts and payroll data from U.S. Census Bureau, *Statistics of U.S. Businesses, 2002,* and payroll data from U.S. Census Bureau, *Statistics of U.S. Businesses, 2006.* For that calculation, OSHA assumed that the ratio of receipts to payroll remained unchanged between 2002 and 2006. OSHA estimated profits from ratios of net income to total receipts as reported for 2000–2006 (seven-year average) by the U.S. Internal Revenue Service, *Corporation Source Book.* Profit data were not available at disaggregated levels for all industries; therefore, profit rates at more highly aggregated levels were used for such industries.

BILLING CODE 4510–29–P

Table V-28
Summary of Cost Impacts Associated with OSHA's Proposed Revisions to the Standards for Subparts D and I

NAICS	Sector Title	Average Cost per Establishment		Ratio of Average Cost to Revenues		Ratio of Average Cost to Profits	
		Minimum	Maximum	Minimum	Maximum	Minimum	Maximum
11	Agriculture, Forestry, Fishing, and Hunting	$6	$9	0.000%	0.001%	0.008%	0.020%
21	Mining*	$92	$92	0.000%	0.000%	0.002%	0.002%
22	Utilities	$124	$434	0.000%	0.025%	0.014%	0.350%
31-33	Manufacturing	$8	$363	0.000%	0.002%	0.000%	0.067%
42	Wholesale Trade	$9	$43	0.000%	0.001%	0.002%	0.019%
44-45	Retail Trade	$4	$55	0.000%	0.002%	0.004%	0.056%
48-49	Transportation	$7	$302	0.000%	0.002%	0.000%	0.052%
51	Information	$6	$443	0.000%	0.002%	0.001%	0.034%
52	Finance and Insurance	$2	$10	0.000%	0.000%	0.000%	0.003%
53	Real Estate	$4	$14	0.000%	0.001%	0.001%	0.023%
54	Professional, Scientific, and Technical Services	$6	$225	0.000%	0.012%	0.006%	0.143%
55	Management	$37	$37	0.000%	0.000%	0.006%	0.006%
56	Administrative and Support, Waste Management and Remediation Services	$7	$423	0.000%	0.077%	0.003%	1.726%
61	Educational Services	$3	$18	0.000%	0.001%	0.001%	0.009%
62	Health Care	$3	$73	0.000%	0.001%	0.001%	0.013%
71	Arts, Entertainment, and Recreation	$4	$11	0.000%	0.001%	0.001%	0.009%
72	Accommodation and Food Services	$3	$17	0.000%	0.001%	0.008%	0.020%
81	Other Services	$2	$33	0.000%	0.003%	0.006%	0.069%

*Includes oil and gas extraction.

Source: ERG, 2007.

Table V-29
Average Cost Impacts on Establishments Affected by OSHA's Proposed Revision to Subparts D and I (per Establishment, by 4-Digit NAICS Code)

NAICS	Industry	Average Receipts per Estab. [a]	Profit Rate [b]		Estimated Profits per Estab.	Estimated Cost of Proposed Rule	Average Cost per Estab.	Ratio of Average Cost to Revenues	Ratio of Average Cost to Profits
1131	Timber Tract Operations	$2,036,662	4.36%	*	$88,884	$3,167	$6.98	0.000%	0.008%
1132	Forest Nurseries and Gathering of Forest Products	$1,282,856	4.36%	*	$55,987	$1,867	$8.08	0.001%	0.014%
1133	Logging	$993,249	4.36%	*	$43,347	$85,767	$8.54	0.001%	0.020%
1141	Fishing	$945,244	5.93%	*	$56,099	$12,258	$6.06	0.001%	0.011%
1142	Hunting and Trapping	$610,900	5.93%	*	$36,256	$2,124	$6.10	0.001%	0.017%
1153	Support Activities for Forestry	$874,316	5.44%	*	$47,559	$10,731	$6.38	0.001%	0.013%
2111	Oil and Gas Extraction	$30,788,486	14.88%		$4,581,731	$716,200	$91.79	0.000%	0.002%
2211	Electric Power Generation, Transmission and Distribution	$38,674,660	4.44%		$1,716,991	$3,277,220	$345.19	0.001%	0.020%
2212	Natural Gas Distribution	$30,459,101	2.98%		$907,390	$305,056	$124.11	0.000%	0.014%
2213	Water, Sewage and Other Systems	$1,753,158	7.06%		$123,776	$2,264,184	$433.59	0.025%	0.350%
3111	Animal Food Manufacturing	$19,646,498	4.24%		$833,877	$32,925	$18.32	0.000%	0.002%
3112	Grain and Oilseed Milling	$67,092,728	4.24%	*	$2,847,687	$29,452	$37.33	0.000%	0.001%
3113	Sugar and Confectionery Product Manufacturing	$15,335,745	7.68%		$1,177,956	$37,243	$21.49	0.000%	0.002%
3114	Fruit and Vegetable Preserving and Specialty Food Manufacturing	$36,162,586	7.01%		$2,535,469	$67,641	$39.65	0.000%	0.002%

Table V-29, contd.
Average Cost Impacts on Establishments Affected by OSHA's Proposed Revision to Subparts D and I (per Establishment, by 4-Digit NAICS Code)

NAICS	Industry	Average Receipts per Estab. [a]	Profit Rate [b]		Estimated Profits per Estab.	Estimated Cost of Proposed Rule	Average Cost per Estab.	Ratio of Average Cost to Revenues	Ratio of Average Cost to Profits
3115	Dairy Product Manufacturing	$46,854,264	2.66%		$1,244,682	$61,363	$38.30	0.000%	0.003%
3116	Animal Slaughtering and Processing	$36,333,693	2.41%		$874,508	$160,347	$42.11	0.000%	0.005%
3117	Seafood Product Preparation and Packaging	$14,575,219	2.41%	*	$350,808	$14,321	$21.37	0.000%	0.006%
3118	Bakeries and Tortilla Manufacturing	$5,234,957	10.13%		$530,163	$153,852	$15.28	0.000%	0.003%
3119	Other Food Manufacturing	$21,407,943	5.68%		$1,215,113	$78,167	$24.39	0.000%	0.002%
3121	Beverage Manufacturing	$20,793,132	6.64%	*	$1,381,286	$80,355	$22.60	0.000%	0.002%
3122	Tobacco Manufacturing	$294,956,118	14.49%		$42,744,884	$13,181	$102.97	0.000%	0.000%
3131	Fiber, Yarn, and Thread Mills	$18,783,597	4.31%	*	$810,359	$19,007	$40.61	0.000%	0.005%
3132	Fabric Mills	$11,516,969	4.31%	*	$496,863	$38,791	$28.19	0.000%	0.006%
3133	Textile and Fabric Finishing and Fabric Coating Mills	$7,019,640	4.31%	*	$302,840	$22,895	$16.37	0.000%	0.005%
3141	Textile Furnishings Mills	$8,027,868	4.56%	*	$365,941	$39,221	$15.27	0.000%	0.004%
3149	Other Textile Product Mills	$2,504,229	4.56%	*	$114,152	$45,143	$10.86	0.000%	0.010%
3151	Apparel Knitting Mills	$7,448,839	3.16%		$235,519	$10,783	$20.31	0.000%	0.009%
3152	Cut and Sew Apparel Manufacturing	$2,742,653	5.59%		$153,271	$75,599	$7.97	0.000%	0.005%
3159	Apparel Accessories and Other Apparel Manufacturing	$2,154,523	4.66%		$100,388	$9,514	$10.06	0.000%	0.010%
3161	Leather and Hide Tanning and Finishing	$5,524,049	6.10%	*	$336,766	$3,172	$12.59	0.000%	0.004%
3162	Footwear Manufacturing	$8,227,628	6.10%	*	$501,585	$5,784	$18.78	0.000%	0.004%
3169	Other Leather and Allied Product Manufacturing	$2,714,697	6.10%	*	$165,498	$7,405	$8.84	0.000%	0.005%
3211	Sawmills and Wood Preservation	$7,011,185	4.08%	*	$286,041	$71,132	$16.84	0.000%	0.006%

Table V-29, contd.
Average Cost Impacts on Establishments Affected by OSHA's Proposed Revision to Subparts D and I (per Establishment, by 4-Digit NAICS Code)

NAICS	Industry	Average Receipts per Estab. [a]	Profit Rate [b]		Estimated Profits per Estab.	Estimated Cost of Proposed Rule	Average Cost per Estab.	Ratio of Average Cost to Revenues	Ratio of Average Cost to Profits
3212	Veneer, Plywood, and Engineered Wood Product Manufacturing	$12,197,313	4.08%	*	$497,624	$56,344	$28.81	0.000%	0.006%
3219	Other Wood Product Manufacturing	$4,711,036	4.08%	*	$192,200	$184,373	$17.47	0.000%	0.009%
3221	Pulp, Paper, and Paperboard Mills	$112,157,688	3.18%		$3,566,640	$184,472	$309.00	0.000%	0.009%
3222	Converted Paper Product Manufacturing	$18,965,317	8.01%		$1,519,550	$331,070	$72.89	0.000%	0.005%
3231	Printing and Related Support Activities	$2,815,173	4.37%	*	$123,080	$436,448	$13.05	0.000%	0.011%
3241	Petroleum and Coal Products Manufacturing	$111,722,106	7.50%	*	$8,380,487	$344,776	$140.84	0.000%	0.002%
3251	Basic Chemical Manufacturing	$45,992,561	4.58%		$2,106,478	$411,790	$169.25	0.000%	0.008%
3252	Resin, Synthetic Rubber, and Artificial Synthetic Fibers and Filaments Manufacturing	$59,275,434	8.53%		$5,056,258	$208,212	$196.61	0.000%	0.004%
3253	Pesticide, Fertilizer, and Other Agricultural Chemical Manufacturing	$20,532,685	11.10%	*	$2,278,119	$75,128	$80.96	0.000%	0.004%
3254	Pharmaceutical and Medicine Manufacturing	$92,789,569	16.64%		$15,436,508	$206,950	$109.73	0.000%	0.001%
3255	Paint, Coating, and Adhesive Manufacturing	$17,095,265	5.38%		$920,475	$63,347	$33.08	0.000%	0.004%
3256	Soap, Cleaning Compound, and Toilet Preparation Manufacturing	$30,617,646	9.21%		$2,818,503	$124,153	$54.48	0.000%	0.002%
3259	Other Chemical Product and Preparation Manufacturing	$14,693,347	4.51%		$662,055	$134,299	$48.89	0.000%	0.007%
3261	Plastics Product Manufacturing	$12,041,641	4.42%		$531,848	$292,915	$23.74	0.000%	0.004%

Table V-29, contd.
Average Cost Impacts on Establishments Affected by OSHA's Proposed Revision to Subparts D and I (per Establishment, by 4-Digit NAICS Code)

NAICS	Industry	Average Receipts per Estab. [a]	Profit Rate [b]		Estimated Profits per Estab.	Estimated Cost of Proposed Rule	Average Cost per Estab.	Ratio of Average Cost to Revenues	Ratio of Average Cost to Profits
3262	Rubber Product Manufacturing	$14,217,509	2.59%		$368,116	$65,482	$29.09	0.000%	0.008%
3271	Clay Product and Refractory Manufacturing	$5,317,927	4.41%		$234,782	$63,081	$40.00	0.001%	0.017%
3272	Glass and Glass Product Manufacturing	$10,171,989	3.42%		$347,975	$121,632	$57.84	0.001%	0.017%
3273	Cement and Concrete Product Manufacturing	$5,507,579	6.64%		$365,598	$349,199	$35.03	0.001%	0.010%
3274	Lime and Gypsum Product Manufacturing	$18,475,560	6.64%	*	$1,226,424	$24,774	$69.39	0.000%	0.006%
3279	Other Nonmetallic Mineral Product Manufacturing	$5,468,993	5.49%	*	$300,195	$111,374	$33.31	0.001%	0.011%
3311	Iron and Steel Mills and Ferroalloy Manufacturing	$65,928,896	4.49%		$2,961,518	$169,255	$204.66	0.000%	0.007%
3312	Steel Product Manufacturing from Purchased Steel	$21,605,469	4.49%	*	$970,515	$59,690	$85.52	0.000%	0.009%
3313	Alumina and Aluminum Production and Processing	$47,054,339	4.46%		$2,100,943	$84,809	$139.49	0.000%	0.007%
3314	Nonferrous Metal (except Aluminum) Production and Processing	$24,919,805	4.42%	*	$1,100,215	$81,091	$85.81	0.000%	0.008%
3315	Foundries	$12,157,333	4.11%		$500,129	$91,525	$41.47	0.000%	0.008%
3321	Forging and Stamping	$9,147,934	4.71%		$430,416	$79,843	$29.35	0.000%	0.007%
3322	Cutlery and Handtool Manufacturing	$6,875,867	5.22%		$359,170	$33,409	$22.24	0.000%	0.006%
3323	Architectural and Structural Metals Manufacturing	$5,273,124	4.70%		$248,040	$277,903	$20.62	0.000%	0.008%

Table V-29, contd.
Average Cost Impacts on Establishments Affected by OSHA's Proposed Revision to Subparts D and I (per Establishment, by 4-Digit NAICS Code)

NAICS	Industry	Average Receipts per Estab. [a]	Profit Rate [b]		Estimated Profits per Estab.	Estimated Cost of Proposed Rule	Average Cost per Estab.	Ratio of Average Cost to Revenues	Ratio of Average Cost to Profits
3324	Boiler, Tank, and Shipping Container Manufacturing	$17,390,735	3.58%		$623,211	$47,156	$30.34	0.000%	0.005%
3325	Hardware Manufacturing	$11,194,203	5.22%	*	$584,745	$23,719	$28.65	0.000%	0.005%
3326	Spring and Wire Product Manufacturing	$5,585,199	5.22%	*	$291,751	$35,029	$21.22	0.000%	0.007%
3327	Machine Shops; Turned Product; and Screw, Nut, and Bolt Manufacturing	$2,040,137	5.80%	*	$118,290	$362,885	$14.60	0.001%	0.012%
3328	Coating, Engraving, Heat Treating, and Allied Activities	$3,426,310	4.85%		$166,333	$98,813	$16.11	0.000%	0.010%
3329	Other Fabricated Metal Product Manufacturing	$8,770,725	6.81%		$597,016	$166,403	$26.26	0.000%	0.004%
3331	Agriculture, Construction, and Mining Machinery Manufacturing	$20,488,525	5.10%		$1,044,755	$112,063	$37.42	0.000%	0.004%
3332	Industrial Machinery Manufacturing	$7,725,192	5.80%		$447,965	$95,988	$24.72	0.000%	0.006%
3333	Commercial and Service Industry Machinery Manufacturing	$9,406,943	4.86%		$457,035	$64,167	$27.90	0.000%	0.006%
3334	Ventilation, Heating, Air-Conditioning, and Commercial Refrigeration Equipment Manufacturing	$19,910,908	4.55%		$906,531	$82,240	$45.66	0.000%	0.005%
3335	Metalworking Machinery Manufacturing	$3,107,359	5.29%		$164,359	$153,624	$18.78	0.001%	0.011%
3336	Engine, Turbine, and Power Transmission Equipment Manufacturing	$46,836,712	2.63%		$1,230,370	$58,621	$64.07	0.000%	0.005%

Table V-29, contd.
Average Cost Impacts on Establishments Affected by OSHA's Proposed Revision to Subparts D and I (per Establishment, by 4-Digit NAICS Code)

NAICS	Industry	Average Receipts per Estab. [a]	Profit Rate [b]		Estimated Profits per Estab.	Estimated Cost of Proposed Rule	Average Cost per Estab.	Ratio of Average Cost to Revenues	Ratio of Average Cost to Profits
3339	Other General Purpose Machinery Manufacturing	$10,364,603	4.58%		$474,321	$185,728	$29.75	0.000%	0.006%
3341	Computer and Peripheral Equipment Manufacturing	$43,720,123	9.05%		$3,955,137	$44,676	$33.77	0.000%	0.001%
3342	Communications Equipment Manufacturing	$36,209,046	4.57%		$1,655,776	$78,202	$41.69	0.000%	0.003%
3343	Audio and Video Equipment Manufacturing	$14,666,519	4.52%		$663,105	$11,000	$21.24	0.000%	0.003%
3344	Semiconductor and Other Electronic Component Manufacturing	$23,066,585	6.60%		$1,523,547	$178,744	$37.46	0.000%	0.002%
3345	Navigational, Measuring, Electromedical, and Control Instruments Manufacturing	$20,026,780	5.94%		$1,190,090	$203,250	$38.80	0.000%	0.003%
3346	Manufacturing and Reproducing Magnetic and Optical Media	$10,519,005	4.52%	*	$475,587	$18,695	$22.77	0.000%	0.005%
3351	Electric Lighting Equipment Manufacturing	$11,180,632	4.21%		$471,061	$30,795	$25.92	0.000%	0.006%
3352	Household Appliance Manufacturing	$60,184,733	4.21%		$2,535,698	$30,011	$82.45	0.000%	0.003%
3353	Electrical Equipment Manufacturing	$13,373,183	7.15%		$955,920	$74,896	$31.25	0.000%	0.003%
3359	Other Electrical Equipment and Component Manufacturing	$17,834,795	5.41%		$965,274	$77,291	$35.78	0.000%	0.004%
3361	Motor Vehicle Manufacturing	$657,511,204	4.87%		$31,995,638	$134,474	$363.44	0.000%	0.001%
3362	Motor Vehicle Body and Trailer Manufacturing	$15,581,739	2.04%	*	$317,940	$82,883	$38.43	0.000%	0.012%

Table V-29, contd.
Average Cost Impacts on Establishments Affected by OSHA's Proposed Revision to Subparts D and I (per Establishment, by 4-Digit NAICS Code)

NAICS	Industry	Average Receipts per Estab. [a]	Profit Rate [b]		Estimated Profits per Estab.	Estimated Cost of Proposed Rule	Average Cost per Estab.	Ratio of Average Cost to Revenues	Ratio of Average Cost to Profits
3363	Motor Vehicle Parts Manufacturing	$36,598,197	2.04%	*	$746,774	$351,672	$63.30	0.000%	0.008%
3364	Aerospace Product and Parts Manufacturing	$89,563,292	2.04%		$1,827,510	$240,905	$145.74	0.000%	0.008%
3365	Railroad Rolling Stock Manufacturing	$44,874,806	4.16%	*	$1,867,908	$17,107	$81.08	0.000%	0.004%
3366	Ship and Boat Building	$13,764,238	2.72%		$374,771	$440,511	$249.72	0.002%	0.067%
3369	Other Transportation Equipment Manufacturing	$16,837,953	5.86%		$987,003	$28,169	$28.28	0.000%	0.003%
3371	Household and Institutional Furniture and Kitchen Cabinet Manufacturing	$2,845,652	6.31%	*	$179,541	$210,037	$12.88	0.000%	0.007%
3372	Office Furniture (including Fixtures) Manufacturing	$5,722,951	4.54%	*	$260,001	$73,350	$17.92	0.000%	0.007%
3379	Other Furniture Related Product Manufacturing	$8,178,416	4.54%	*	$371,556	$19,374	$18.38	0.000%	0.005%
3391	Medical Equipment and Supplies Manufacturing	$6,107,312	4.54%		$277,463	$212,803	$17.41	0.000%	0.006%
3399	Other Miscellaneous Manufacturing	$3,513,187	10.77%		$378,338	$294,315	$15.48	0.000%	0.004%
4231	Motor Vehicle and Motor Vehicle Parts and Supplies Merchant Wholesalers	$31,354,335	5.80%		$1,817,155	$785,276	$32.02	0.000%	0.002%
4232	Furniture and Home Furnishing Merchant Wholesalers	$7,064,656	2.76%	*	$194,833	$220,375	$17.55	0.000%	0.009%
4233	Lumber and Other Construction Materials Merchant Wholesalers	$10,027,890	2.90%		$291,214	$566,219	$29.90	0.000%	0.010%

Table V-29, contd.
Average Cost Impacts on Establishments Affected by OSHA's Proposed Revision to Subparts D and I (per Establishment, by 4-Digit NAICS Code)

NAICS	Industry	Average Receipts per Estab. [a]	Profit Rate [b]	Estimated Profits per Estab.	Estimated Cost of Proposed Rule	Average Cost per Estab.	Ratio of Average Cost to Revenues	Ratio of Average Cost to Profits
4234	Professional and Commercial Equipment and Supplies Merchant Wholesalers	$13,020,195	3.04%	$396,021	$1,590,635	$43.44	0.000%	0.011%
4235	Metal and Mineral (except Petroleum) Merchant Wholesalers	$14,644,310	2.78%	$407,362	$239,624	$22.49	0.000%	0.006%
4236	Electrical and Electronic Goods Merchant Wholesalers	$13,954,419	2.69%	$375,249	$1,031,179	$35.28	0.000%	0.009%
4237	Hardware, and Plumbing and Heating Equipment and Supplies Merchant Wholesalers	$6,412,786	2.28%	$146,016	$537,529	$28.06	0.000%	0.019%
4238	Machinery, Equipment, and Supplies Merchant Wholesalers	$6,296,743	2.99%	$188,272	$1,951,908	$33.06	0.001%	0.018%
4239	Miscellaneous Durable Goods Merchant Wholesalers	$5,977,921	3.44%	$205,377	$719,695	$21.17	0.000%	0.010%
4241	Paper and Paper Product Merchant Wholesalers	$11,175,943	2.90%	$324,554	$179,051	$15.23	0.000%	0.005%
4242	Drugs and Druggists' Sundries Merchant Wholesalers	$34,610,272	2.12%	$735,463	$118,786	$15.56	0.000%	0.002%
4243	Apparel, Piece Goods, and Notions Merchant Wholesalers	$8,758,485	3.46%	$302,636	$139,055	$8.87	0.000%	0.003%
4244	Grocery and Related Product Wholesalers	$19,821,047	4.79%	$950,239	$854,835	$25.53	0.000%	0.003%
4245	Farm Product Raw Material Merchant Wholesalers	$18,364,754	2.59%	$476,056	$89,026	$13.43	0.000%	0.003%
4246	Chemical and Allied Products Merchant Wholesalers	$9,847,751	2.28%	$224,516	$311,047	$24.93	0.000%	0.011%

Table V-29, contd.
Average Cost Impacts on Establishments Affected by OSHA's Proposed Revision to Subparts D and I (per Establishment, by 4-Digit NAICS Code)

NAICS	Industry	Average Receipts per Estab. [a]	Profit Rate [b]		Estimated Profits per Estab.	Estimated Cost of Proposed Rule	Average Cost per Estab.	Ratio of Average Cost to Revenues	Ratio of Average Cost to Profits
4247	Petroleum and Petroleum Products Merchant Wholesalers	$49,353,607	3.16%		$1,561,675	$240,274	$33.49	0.000%	0.002%
4248	Beer, Wine, and Distilled Alcoholic Beverage Merchant Wholesalers	$25,249,332	2.00%		$504,190	$114,091	$27.58	0.000%	0.005%
4249	Miscellaneous Nondurable Goods Merchant Wholesalers	$8,167,972	3.92%		$320,013	$399,624	$12.57	0.000%	0.004%
4251	Wholesale Electronic Markets and Agents and Brokers	$5,145,093	3.18%	*	$163,757	$832,693	$15.28	0.000%	0.009%
4411	Automobile Dealers	$14,366,952	7.14%		$1,025,770	$2,859,160	$54.80	0.000%	0.005%
4412	Other Motor Vehicle Dealers	$3,798,159	1.18%	**	$44,861	$409,433	$24.38	0.001%	0.054%
4413	Automotive Parts, Accessories, and Tire Stores	$1,337,738	2.78%	*	$37,149	$1,238,044	$20.83	0.002%	0.056%
4421	Furniture Stores	$2,037,962	1.45%	*	$29,470	$320,422	$10.96	0.001%	0.037%
4422	Home Furnishings Stores	$1,383,751	3.63%	*	$50,272	$564,198	$15.41	0.001%	0.031%
4431	Electronics and Appliance Stores	$2,089,112	3.63%	*	$75,898	$980,516	$19.88	0.001%	0.026%
4441	Building Material and Supplies Dealers	$4,395,212	3.52%	*	$154,712	$1,474,836	$21.90	0.000%	0.014%
4442	Lawn and Garden Equipment and Supplies Stores	$1,847,574	7.87%	**	$145,384	$283,045	$13.81	0.001%	0.010%
4451	Grocery Stores	$4,841,064	2.20%	*	$106,707	$637,780	$6.77	0.000%	0.006%
4452	Specialty Food Stores	$625,965	2.07%	*	$12,934	$157,546	$5.63	0.001%	0.044%
4453	Beer, Wine, and Liquor Stores	$1,116,580	2.07%	*	$23,072	$134,786	$4.46	0.000%	0.019%
4461	Health and Personal Care Stores	$2,866,179	2.34%	*	$67,148	$706,517	$8.12	0.000%	0.012%
4471	Gasoline Stations	$2,272,512	2.94%	*	$66,714	$1,270,755	$10.87	0.000%	0.016%
4481	Clothing Stores	$1,567,430	1.01%	*	$15,868	$679,575	$7.10	0.000%	0.045%
4482	Shoe Stores	$998,855	5.53%	*	$55,280	$169,939	$6.36	0.001%	0.012%

Table V-29, contd.
Average Cost Impacts on Establishments Affected by OSHA's Proposed Revision to Subparts D and I (per Establishment, by 4-Digit NAICS Code)

NAICS	Industry	Average Receipts per Estab. [a]	Profit Rate [b]		Estimated Profits per Estab.	Estimated Cost of Proposed Rule	Average Cost per Estab.	Ratio of Average Cost to Revenues	Ratio of Average Cost to Profits
4483	Jewelry, Luggage, and Leather Goods Stores	$991,170	5.53%	*	$54,855	$265,861	$8.96	0.001%	0.016%
4511	Sporting Goods, Hobby, and Musical Instrument Stores	$1,382,881	5.53%	*	$76,533	$676,227	$15.72	0.001%	0.021%
4512	Book, Periodical, and Music Stores	$1,331,320	3.00%	*	$39,921	$105,174	$6.01	0.000%	0.015%
4521	Department Stores	$26,975,048	3.00%	*	$808,883	$477,857	$47.93	0.000%	0.006%
4529	Other General Merchandise Stores	$7,905,058	4.26%	*	$336,445	$1,033,178	$28.12	0.000%	0.008%
4531	Florists	$325,333	4.26%	*	$13,846	$76,734	$3.79	0.001%	0.027%
4532	Office Supplies, Stationery, and Gift Stores	$1,065,158	3.60%	*	$38,308	$520,146	$12.61	0.001%	0.033%
4533	Used Merchandise Stores	$541,375	3.60%	*	$19,470	$124,489	$7.05	0.001%	0.036%
4539	Other Miscellaneous Store Retailers	$1,047,095	3.60%	*	$37,658	$552,244	$12.01	0.001%	0.032%
4541	Electronic Shopping and Mail-Order Houses	$8,015,835	3.60%	*	$288,287	$170,599	$10.51	0.000%	0.004%
4542	Vending Machine Operators	$1,345,227	4.05%	*	$54,466	$118,702	$22.58	0.002%	0.041%
4543	Direct Selling Establishments	$1,781,365	4.05%	*	$72,125	$457,551	$17.05	0.001%	0.024%
4811	Scheduled Air Transportation	$27,568,446	4.05%	*	$1,116,202	$926,907	$301.73	0.001%	0.027%
4812	Nonscheduled Air Transportation	$4,983,338	2.98%	*	$148,442	$101,159	$39.86	0.001%	0.027%
4831	Deep Sea, Coastal, and Great Lakes Water Transportation	$18,563,075	2.98%	*	$552,951	$45,603	$36.14	0.000%	0.007%
4832	Inland Water Transportation	$7,369,971	6.58%	*	$485,071	$18,907	$28.52	0.000%	0.006%
4841	General Freight Trucking	$2,179,183	6.58%	*	$143,428	$1,119,434	$16.63	0.001%	0.012%
4842	Specialized Freight Trucking	$1,336,656	2.80%	*	$37,432	$630,691	$11.91	0.001%	0.032%
4851	Urban Transit Systems	$3,163,984	2.80%	*	$88,604	$24,900	$27.30	0.001%	0.031%

Table V-29, contd.
Average Cost Impacts on Establishments Affected by OSHA's Proposed Revision to Subparts D and I (per Establishment, by 4-Digit NAICS Code)

NAICS	Industry	Average Receipts per Estab. [a]	Profit Rate [b]		Estimated Profits per Estab.	Estimated Cost of Proposed Rule	Average Cost per Estab.	Ratio of Average Cost to Revenues	Ratio of Average Cost to Profits
4852	Interurban and Rural Bus Transportation	$2,292,160	2.52%	*	$57,747	$10,808	$22.75	0.001%	0.039%
4853	Taxi and Limousine Service	$758,126	2.52%	*	$19,100	$52,588	$7.50	0.001%	0.039%
4854	School and Employee Bus Transportation	$1,780,332	2.52%	*	$44,853	$83,789	$19.39	0.001%	0.043%
4855	Charter Bus Industry	$1,629,704	2.52%	*	$41,058	$15,603	$12.93	0.001%	0.031%
4859	Other Transit and Ground Passenger Transportation	$1,025,226	2.52%	*	$25,829	$33,135	$10.05	0.001%	0.039%
4861	Pipeline Transportation of Crude Oil	$15,628,109	2.52%	*	$393,726	$19,563	$52.45	0.000%	0.013%
4862	Pipeline Transportation of Natural Gas	$15,036,768	14.28%	*	$2,146,828	$60,854	$44.65	0.000%	0.002%
4869	Other Pipeline Transportation	$9,607,982	14.28%	*	$1,371,750	$31,831	$34.71	0.000%	0.003%
4871	Scenic and Sightseeing Transportation, Land	$1,076,889	14.28%	*	$153,749	$4,432	$6.54	0.001%	0.004%
4872	Scenic and Sightseeing Transportation, Water	$875,903	5.04%	*	$44,151	$13,083	$7.05	0.001%	0.016%
4879	Scenic and Sightseeing Transportation, Other	$2,508,165	5.04%	*	$126,427	$2,385	$12.89	0.001%	0.010%
4881	Support Activities for Air Transportation	$3,432,026	5.04%	**	$172,995	$222,415	$42.99	0.001%	0.025%
4882	Support Activities for Rail Transportation	$3,451,614	3.61%	**	$124,586	$37,877	$39.37	0.001%	0.032%
4883	Support Activities for Water Transportation	$5,519,986	3.61%	**	$199,244	$168,340	$72.22	0.001%	0.036%
4884	Support Activities for Road Transportation	$669,810	3.61%	**	$24,177	$119,519	$12.52	0.002%	0.052%

Table V-29, contd.
Average Cost Impacts on Establishments Affected by OSHA's Proposed Revision to Subparts D and I (per Establishment, by 4-Digit NAICS Code)

NAICS	Industry	Average Receipts per Estab. [a]	Profit Rate [b]		Estimated Profits per Estab.	Estimated Cost of Proposed Rule	Average Cost per Estab.	Ratio of Average Cost to Revenues	Ratio of Average Cost to Profits
4885	Freight Transportation Arrangement	$2,204,247	3.61%	**	$79,562	$151,146	$8.67	0.000%	0.011%
4889	Other Support Activities for Transportation	$2,426,030	3.61%	**	$87,568	$23,097	$14.11	0.001%	0.016%
4921	Couriers	$7,426,946	0.03609507	**	$268,076	$303,054	$34.74	0.000%	0.000%
4922	Local Messengers and Local Delivery	$732,446	0.03609507	**	$26,438	$37,722	$7.45	0.001%	0.000%
4931	Warehousing and Storage	$5,990,263	3.61%	*	$216,219	$385,865	$27.86	0.000%	0.013%
5111	Newspaper, Periodical, Book, and Directory Publishers	$6,508,148	5.03%	*	$327,163	$232,067	$10.05	0.000%	0.003%
5112	Software Publishers	$13,922,013	12.58%	*	$1,751,020	$181,574	$20.77	0.000%	0.001%
5121	Motion Picture and Video Industries	$4,114,085	17.36%	**	$714,192	$125,039	$6.13	0.000%	0.001%
5122	Sound Recording Industries	$3,257,430	6.35%	**	$206,892	$37,945	$10.64	0.000%	0.005%
5151	Radio and Television Broadcasting	$6,128,916	8.41%	*	$515,288	$260,685	$26.31	0.000%	0.005%
5152	Cable and Other Subscription Programming	$35,828,634	7.05%	*	$2,524,246	$298,460	$443.48	0.001%	0.018%
5161	Internet Publishing and Broadcasting	$6,525,331	7.05%	*	$459,731	$24,033	$9.06	0.000%	0.002%
5171	Wired Telecommunications Carriers	$8,279,458	7.40%	*	$612,548	$5,604,552	$206.36	0.002%	0.034%
5172	Wireless Telecommunications Carriers (except Satellite)	$6,135,232	6.69%	*	$410,237	$1,168,143	$96.48	0.002%	0.024%
5173	Telecommunications Resellers	$3,831,183	6.69%	*	$256,175	$26,473	$10.35	0.000%	0.004%
5174	Satellite Telecommunications	$10,533,017	6.69%	*	$704,298	$101,712	$175.06	0.002%	0.025%

Table V-29, contd.
Average Cost Impacts on Establishments Affected by OSHA's Proposed Revision to Subparts D and I (per Establishment, by 4-Digit NAICS Code)

NAICS	Industry	Average Receipts per Estab. [a]	Profit Rate [b]		Estimated Profits per Estab.	Estimated Cost of Proposed Rule	Average Cost per Estab.	Ratio of Average Cost to Revenues	Ratio of Average Cost to Profits
5175	Cable and Other Program Distribution	$13,161,700	6.69%	*	$880,066	$57,476	$11.93	0.000%	0.001%
5179	Other Telecommunications	$6,529,383	6.69%	*	$436,592	$16,831	$31.11	0.000%	0.007%
5181	Internet Service Providers and Web Search Portals	$4,972,021	6.69%	*	$332,458	$31,929	$5.73	0.000%	0.002%
5182	Data Processing, Hosting, and Related Services	$4,799,373	7.45%	*	$357,336	$111,646	$7.24	0.000%	0.002%
5191	Other Information Services	$1,509,730	7.45%	*	$112,406	$35,352	$8.49	0.001%	0.008%
5211	Monetary Authorities - Central Bank	$274,330,879	8.94%	*	$24,526,291	$1,089	$10.08	0.000%	0.000%
5221	Depository Credit Intermediation	$6,448,988	15.59%	*	$1,005,509	$518,093	$4.30	0.000%	0.000%
5222	Nondepository Credit Intermediation	$8,333,142	11.43%	*	$952,455	$164,423	$2.77	0.000%	0.000%
5223	Activities Related to Credit Intermediation	$2,161,669	9.01%	**	$194,793	$148,511	$3.33	0.000%	0.002%
5231	Securities and Commodity Contracts Intermediation and Brokerage	$7,610,676	10.15%	*	$772,655	$200,088	$5.08	0.000%	0.001%
5232	Securities and Commodity Exchanges	$11,417,563	10.11%	*	$1,154,353	$2,392	$5.41	0.000%	0.000%
5239	Other Financial Investment Activities	$3,555,322	10.11%	*	$359,455	$130,398	$2.79	0.000%	0.001%
5241	Insurance Carriers	$42,343,735	28.35%	*	$12,005,312	$229,557	$6.67	0.000%	0.000%
5242	Agencies, Brokerages, and Other Insurance Related Activities	$1,161,943	5.12%	*	$59,462	$243,243	$1.67	0.000%	0.003%
5259	Other Investment Pools and Funds	$10,933,178	5.12%	*	$559,503	$16,682	$5.79	0.000%	0.001%
5311	Lessors of Real Estate	$1,184,281	64.80%	*	$767,398	$714,997	$6.08	0.001%	0.001%

Table V-29, contd.
Average Cost Impacts on Establishments Affected by OSHA's Proposed Revision to Subparts D and I (per Establishment, by 4-Digit NAICS Code)

NAICS	Industry	Average Receipts per Estab. [a]	Profit Rate [b]		Estimated Profits per Estab.	Estimated Cost of Proposed Rule	Average Cost per Estab.	Ratio of Average Cost to Revenues	Ratio of Average Cost to Profits
5312	Offices of Real Estate Agents and Brokers	$984,181	13.34%	*	$131,327	$504,427	$4.42	0.000%	0.003%
5313	Activities Related to Real Estate	$1,005,517	9.66%	*	$97,104	$700,921	$8.57	0.001%	0.009%
5321	Automotive Equipment Rental and Leasing	$3,056,687	13.34%	**	$407,876	$133,343	$9.79	0.000%	0.002%
5322	Consumer Goods Rental	$739,777	3.20%	*	$23,668	$180,606	$5.42	0.001%	0.023%
5323	General Rental Centers	$848,764	4.58%	*	$38,846	$35,075	$6.30	0.001%	0.016%
5324	Commercial and Industrial Machinery and Equipment Rental and Leasing	$3,304,043	4.58%	**	$151,220	$187,489	$13.57	0.000%	0.009%
5331	Lessors of Nonfinancial Intangible Assets (except Copyrighted Works)	$10,332,742	6.44%	*	$665,891	$12,632	$5.41	0.000%	0.001%
5411	Legal Services	$1,165,746	31.10%	**	$362,598	$563,807	$2.98	0.000%	0.001%
5412	Accounting, Tax Preparation, Bookkeeping, and Payroll Services	$970,564	8.85%	**	$85,865	$834,042	$6.87	0.001%	0.008%
5413	Architectural, Engineering, and Related Services	$1,961,884	8.74%	**	$171,563	$1,632,122	$14.16	0.001%	0.008%
5414	Specialized Design Services	$634,257	4.81%	**	$30,491	$190,631	$5.65	0.001%	0.019%
5415	Computer Systems Design and Related Services	$2,016,788	6.41%	**	$129,185	$1,390,080	$12.54	0.001%	0.010%
5416	Management, Scientific, and Technical Consulting Services	$1,228,565	5.96%	**	$73,257	$1,287,287	$8.83	0.001%	0.012%
5417	Scientific Research and Development Services	$8,345,540	7.95%	**	$663,435	$630,663	$36.77	0.000%	0.006%
5418	Advertising and Related Services	$1,814,725	8.66%	**	$157,229	$8,863,546	$225.25	0.012%	0.143%

Table V-29, contd.
Average Cost Impacts on Establishments Affected by OSHA's Proposed Revision to Subparts D and I (per Establishment, by 4-Digit NAICS Code)

NAICS	Industry	Average Receipts per Estab. [a]	Profit Rate [b]		Estimated Profits per Estab.	Estimated Cost of Proposed Rule	Average Cost per Estab.	Ratio of Average Cost to Revenues	Ratio of Average Cost to Profits
5419	Other Professional, Scientific, and Technical Services	$851,957	5.61%	**	$47,759	$453,742	$6.18	0.001%	0.013%
5511	Management of Companies and Enterprises	$8,420,195	7.10%	**	$598,103	$1,802,683	$37.31	0.000%	0.006%
5611	Office Administrative Services	$2,295,927	14.63%	*	$335,934	$335,791	$11.49	0.001%	0.003%
5612	Facilities Support Services	$4,465,124	4.46%	*	$199,148	$152,611	$37.09	0.001%	0.019%
5613	Employment Services	$4,127,040	4.46%	**	$184,069	$2,586,264	$59.42	0.001%	0.032%
5614	Business Support Services	$1,746,545	2.65%	*	$46,248	$355,885	$9.95	0.001%	0.022%
5615	Travel Arrangement and Reservation Services	$1,343,275	4.46%	**	$59,911	$159,990	$6.88	0.001%	0.011%
5616	Investigation and Security Services	$1,631,472	3.73%	*	$60,913	$605,152	$24.45	0.001%	0.040%
5617	Services to Buildings and Dwellings	$549,348	4.46%	*	$24,501	$74,538,994	$422.77	0.077%	1.726%
5619	Other Support Services	$1,737,422	4.46%	*	$77,490	$250,705	$11.68	0.001%	0.015%
5621	Waste Collection	$3,545,148	5.83%	*	$206,626	$155,944	$17.54	0.000%	0.008%
5622	Waste Treatment and Disposal	$5,137,267	4.61%	*	$236,768	$69,946	$25.35	0.000%	0.011%
5629	Remediation and Other Waste Management Services	$1,879,261	4.61%	*	$86,612	$244,801	$29.60	0.002%	0.034%
6111	Elementary and Secondary Schools	$2,394,633	4.61%	**	$110,365	$77,441	$3.76	0.000%	0.003%
6112	Junior Colleges	$3,867,039	8.06%	**	$311,549	$6,069	$6.89	0.000%	0.002%
6113	Colleges, Universities, and Professional Schools	$32,761,430	8.06%	**	$2,639,430	$70,070	$18.10	0.000%	0.001%
6114	Business Schools and Computer and Management Training	$1,247,327	8.06%	**	$100,491	$25,242	$3.53	0.000%	0.004%
6115	Technical and Trade Schools	$1,523,403	8.06%	**	$122,733	$38,362	$4.97	0.000%	0.004%

Table V-29, contd.
Average Cost Impacts on Establishments Affected by OSHA's Proposed Revision to Subparts D and I (per Establishment, by 4-Digit NAICS Code)

NAICS	Industry	Average Receipts per Estab. [a]	Profit Rate [b]		Estimated Profits per Estab.	Estimated Cost of Proposed Rule	Average Cost per Estab.	Ratio of Average Cost to Revenues	Ratio of Average Cost to Profits
6116	Other Schools and Instruction	$410,958	8.06%	**	$33,109	$110,141	$3.09	0.001%	0.009%
6117	Educational Support Services	$1,348,119	8.06%	**	$108,611	$24,695	$3.65	0.000%	0.003%
6211	Offices of Physicians	$1,472,044	8.06%	*	$118,595	$821,133	$3.79	0.000%	0.003%
6212	Offices of Dentists	$710,330	4.45%	*	$31,592	$422,227	$3.39	0.000%	0.011%
6213	Offices of Other Health Practitioners	$436,205	7.34%	*	$32,021	$401,016	$3.38	0.001%	0.011%
6214	Outpatient Care Centers	$2,969,216	8.13%	*	$241,380	$162,662	$5.70	0.000%	0.002%
6215	Medical and Diagnostic Laboratories	$3,068,470	5.71%	*	$175,059	$57,942	$4.80	0.000%	0.003%
6216	Home Health Care Services	$2,162,602	5.46%	*	$118,119	$95,064	$4.41	0.000%	0.004%
6219	Other Ambulatory Health Care Services	$2,971,026	5.46%	*	$162,274	$55,287	$6.33	0.000%	0.004%
6221	General Medical and Surgical Hospitals	$109,940,645	5.46%	**	$6,004,820	$389,670	$73.25	0.000%	0.001%
6222	Psychiatric and Substance Abuse Hospitals	$24,296,943	5.38%	**	$1,307,469	$20,880	$30.84	0.000%	0.002%
6223	Specialty (except Psychiatric and Substance Abuse) Hospitals	$25,662,093	5.38%	**	$1,380,931	$20,093	$23.75	0.000%	0.002%
6231	Nursing Care Facilities	$4,947,927	5.38%	**	$266,258	$163,979	$9.50	0.000%	0.004%
6232	Residential Mental Retardation, Mental Health and Substance Abuse Facilities	$763,353	5.38%	**	$41,078	$144,763	$4.72	0.001%	0.011%
6233	Community Care Facilities for the Elderly	$1,699,891	5.38%	**	$91,475	$98,807	$5.12	0.000%	0.006%
6239	Other Residential Care Facilities	$1,227,379	5.38%	**	$66,048	$34,116	$5.13	0.000%	0.008%
6241	Individual and Family Services	$1,029,718	5.38%	**	$55,411	$169,888	$3.05	0.000%	0.006%

Table V-29, contd.
Average Cost Impacts on Establishments Affected by OSHA's Proposed Revision to Subparts D and I (per Establishment, by 4-Digit NAICS Code)

NAICS	Industry	Average Receipts per Estab. [a]	Profit Rate [b]		Estimated Profits per Estab.	Estimated Cost of Proposed Rule	Average Cost per Estab.	Ratio of Average Cost to Revenues	Ratio of Average Cost to Profits
6242	Community Food and Housing, and Emergency and Other Relief Services	$1,145,759	5.38%	**	$61,656	$49,412	$3.79	0.000%	0.006%
6243	Vocational Rehabilitation Services	$1,452,550	5.38%	**	$78,165	$42,137	$5.02	0.000%	0.006%
6244	Child Day Care Services	$371,692	5.38%	**	$20,002	$188,187	$2.55	0.001%	0.013%
7111	Performing Arts Companies	$1,383,714	5.38%	*	$74,461	$53,885	$5.86	0.000%	0.008%
7112	Spectator Sports	$5,969,303	9.76%	*	$582,501	$38,170	$8.36	0.000%	0.001%
7113	Promoters of Performing Arts, Sports, and Similar Events	$2,195,804	9.76%	*	$214,272	$64,202	$11.11	0.001%	0.005%
7114	Agents and Managers for Artists, Athletes, Entertainers, and Other Public Figures	$1,242,041	9.76%	*	$121,202	$13,899	$3.98	0.000%	0.003%
7115	Independent Artists, Writers, and Performers	$587,069	9.76%	*	$57,288	$71,585	$3.69	0.001%	0.006%
7121	Museums, Historical Sites, and Similar Institutions	$1,414,378	9.76%	**	$138,019	$36,066	$5.09	0.000%	0.004%
7131	Amusement Parks and Arcades	$3,935,750	7.74%	*	$304,532	$31,452	$10.75	0.000%	0.004%
7132	Gambling Industries	$10,415,846	6.33%	*	$659,261	$21,888	$8.42	0.000%	0.001%
7139	Other Amusement and Recreation Industries	$826,561	6.33%	*	$52,316	$326,185	$4.80	0.001%	0.009%
7211	Traveler Accommodation	$2,853,736	6.33%	*	$180,624	$903,898	$16.96	0.001%	0.009%
7212	RV (Recreational Vehicle) Parks and Recreational Camps	$557,840	5.64%	*	$31,484	$42,758	$5.95	0.001%	0.019%
7213	Rooming and Boarding Houses	$592,294	5.64%	*	$33,428	$10,704	$4.77	0.001%	0.014%
7221	Full-Service Restaurants	$878,192	5.64%	*	$49,564	$893,824	$4.19	0.000%	0.008%
7222	Limited-Service Eating Places	$658,733	4.98%	*	$32,787	$703,975	$2.75	0.000%	0.008%

Table V-29, contd.
Average Cost Impacts on Establishments Affected by OSHA's Proposed Revision to Subparts D and I (per Establishment, by 4-Digit NAICS Code)

NAICS	Industry	Average Receipts per Estab. [a]	Profit Rate [b]		Estimated Profits per Estab.	Estimated Cost of Proposed Rule	Average Cost per Estab.	Ratio of Average Cost to Revenues	Ratio of Average Cost to Profits
7223	Special Food Services	$1,113,710	4.98%	*	$55,432	$363,979	$10.87	0.001%	0.020%
7224	Drinking Places (Alcoholic Beverages)	$395,658	4.98%	*	$19,693	$145,102	$3.15	0.001%	0.016%
8111	Automotive Repair and Maintenance	$529,294	4.98%	*	$26,344	$2,990,180	$18.20	0.003%	0.069%
8112	Electronic and Precision Equipment Repair and Maintenance	$1,373,334	3.68%	*	$50,595	$430,165	$32.59	0.002%	0.064%
8113	Commercial and Industrial Machinery and Equipment (except Automotive and Electronic) Repair and Maintenance	$1,112,510	5.17%	*	$57,554	$638,261	$25.96	0.002%	0.045%
8114	Personal and Household Goods Repair and Maintenance	$368,721	5.17%	*	$19,075	$289,608	$12.37	0.003%	0.065%
8121	Personal Care Services	$236,768	5.17%	*	$12,249	$272,065	$2.47	0.001%	0.020%
8122	Death Care Services	$718,757	5.67%	*	$40,779	$129,716	$6.12	0.001%	0.015%
8123	Dry-cleaning and Laundry Services	$577,876	5.67%	*	$32,786	$314,877	$7.45	0.001%	0.023%
8129	Other Personal Services	$499,974	5.67%	*	$28,366	$243,140	$6.69	0.001%	0.024%
8131	Religious Organizations	$541,280	5.67%	*	$30,710	$1,223,875	$7.01	0.001%	0.023%
8132	Grantmaking and Giving Services	$3,430,139	2.55%	*	$87,621	$87,411	$5.43	0.000%	0.006%
8133	Social Advocacy Organizations	$1,059,616	2.55%	*	$27,067	$95,996	$6.73	0.001%	0.025%
8134	Civic and Social Organizations	$572,399	2.55%	*	$14,622	$203,696	$6.65	0.001%	0.045%
8139	Business, Professional, Labor, Political, and Similar Organizations	$1,095,583	2.55%	*	$27,986	$499,011	$7.60	0.001%	0.027%

Table V-29, contd.
Average Cost Impacts on Establishments Affected by OSHA's Proposed Revision to Subparts D and I (per Establishment, by 4-Digit NAICS Code)

NAICS	Industry	Average Receipts per Estab. [a]	Profit Rate [b]	Estimated Profits per Estab.	Estimated Cost of Proposed Rule	Average Cost per Estab.	Ratio of Average Cost to Revenues	Ratio of Average Cost to Profits

[a] Estimated based on 2002 receipts and payroll data from U.S. Census Bureau, *Statistics of U.S. Businesses*, 2002 and payroll data from U.S. Census Bureau, *Statistics of U.S. Businesses*, 2006. Receipts were not available for 2006 at disaggregated industry levels, but were estimated assuming the ratio of receipts to payroll remained unchanged between 2002 and 2006.
[b] Estimated from average of the yearly ratios of net income to total receipts as reported by the U.S. Internal Revenue Service, *Corporation Source Book, 2000 – 2006*. Data were not available at disaggregated levels for all industries; profit rates at more highly aggregated levels are used for such industries.
* Profit rate imputed from corresponding 3-digit NAICS industry.
** Profit rate imputed from corresponding 2-digit NAICS industry.
Source: U.S. Dept. of Labor, OSHA, Directorate of Evaluation and Analysis, Office of Regulatory Analysis, based on ERG, 2007.

BILLING CODE 4510–29–C

OSHA compared the baseline financial data with total annualized incremental costs of compliance by computing compliance costs as a percentage of revenues and profits. This impact assessment for all firms, presented in Tables V–28 and V–29, is considered a screening analysis and is the first step in OSHA's analysis of whether the compliance costs potentially associated with the proposed standard would lead to significant impacts on establishments in the affected industries. The actual impact of the proposed standard on the viability of establishments in a given industry, in a static world, depends, to a significant degree, on the price elasticity of demand for the services sold by establishments in that industry.

Price elasticity refers to the relationship between the price charged for a service and the demand for that service; that is, the more elastic the relationship, the less able is an establishment to pass the costs of compliance through to its customers in the form of a price increase and the more it will have to absorb the costs of compliance from its profits. When demand is inelastic, establishments can recover most of the costs of compliance by raising the prices they charge for that service; under this scenario, profit rates are largely unchanged and the industry remains largely unaffected. Any impacts are primarily on those using the relevant services. On the other hand, when demand is elastic, establishments cannot recover all the costs simply by passing the cost increase through in the form of a price increase; instead, they must absorb some of the increase from their profits. Commonly, this will mean both reductions in the quantity of goods and services produced and in total profits, though the profit rate may remain unchanged. In general, "when an industry is subject to a higher cost, it does not simply swallow it, it raises its price and reduces its output, and in this way shifts a part of the cost to its consumers and a part to its suppliers," in the words of the court in *American Dental Association* v. *Secretary of Labor* (984 F.2d 823, 829 (7th Cir. 1993)).

The court's summary is in accordance with micro-economic theory. In the long run, firms can only remain in business if their profits are adequate to provide a return on investment that assures that investment in the industry will continue. Over time, because of rising real incomes and productivity, firms in most industries are able to assure an adequate profit. As technology and costs change, however, the long-run demand for some products increases and the long-run demand for other products decreases. In the face of rising external costs, firms that otherwise have a profitable line of business may have to increase prices to stay viable. Commonly, increases in prices result in reduced demand, but rarely eliminate all demand for the product. Whether this decrease in the total production of the product results in smaller production for each establishment within the industry, or the closure of some plants within the industry, or a combination of the two, is dependent on the cost and profit structure of individual firms within the industry.

If demand is completely inelastic (*i.e.*, price elasticity is 0), then the impact of compliance costs that are 1 percent of revenues for each firm in the industry would result in a 1 percent increase in the price of the product or service, with no decline in quantity demanded. Such a situation represents an extreme case, but might be correct in situations in which there are few if any substitutes for the product or service in question, or if the products or services of the affected sector account for only a small portion of the income of its consumers.

If the demand is perfectly elastic (*i.e.*, the price elasticity is infinitely large), then no increase in price is possible and before-tax profits would be reduced by an amount equal to the costs of compliance (minus any savings resulting from improved employee health and/or reduced insurance costs) if the industry attempted to keep producing the same amount of goods and services as previously. Under this scenario, if the costs of compliance are such a large percentage of profits that some or all plants in the industry can no longer invest in the industry with hope of an adequate return on investment, then some or all of the firms in the industry will close. This scenario is highly unlikely to occur, however, because it can only arise when there are other goods and services that are, in the eyes of the consumer, perfect substitutes for the goods and services the affected establishments produce.

A common intermediate case would be a price elasticity of one. In this situation, if the costs of compliance amount to 1 percent of revenues, then production would decline by 1 percent and prices would rise by 1 percent. In this case, the industry revenues would stay the same, with somewhat lower production, but similar profit rates (in most situations where the marginal costs of production net of regulatory costs would fall as well). Consumers would, however, get less of the product or the service for their expenditures, and producers would collect lower total profits; this, as the court described in *American Dental Association* v. *Secretary of Labor,* is the more typical case.

If there is a price elasticity of one, the question of economic feasibility is complicated. On the one hand, the industry will certainly not be "eliminated" with the level of costs found in this rulemaking, since under these assumptions the change in total profits is somewhat less than the costs imposed by the regulation. But there is still the question of whether the industry's competitive structure will be significantly altered. For example, given a 20 percent increase in costs, and an elasticity of one, the industry will not be eliminated. However, if the increase in costs is such that all small firms in an industry will have to close, this could reasonably be concluded to have altered its competitive structure. For this reason, when costs are a significant percentage of revenues, OSHA examines the differential costs by size of firm, and other classifications that may be important.

As indicated by the impact estimates shown in Tables V–28 and V–29, OSHA has determined that, for all affected establishments in general industry, revenue impacts will not exceed 0.08 percent for any affected industry group, and that profit impacts will not exceed 1.7 percent for any affected industry group.

The economic impact of the proposal is most likely to consist of a small increase in prices for the goods and services provided by the affected employers of less than 0.02 percent in the majority of cases. It is unlikely that a price increase of the magnitude of 0.02 percent will significantly alter the quantity of goods or services demanded by the public or any other affected customers or intermediaries. If the compliance costs of the proposal can be substantially recouped with such a minimal increase in prices, there may be little effect on profits.

In general, for most establishments, it would be unlikely that none of the compliance costs could be passed along in the form of increased prices. In the event that unusual circumstances may inhibit even a price increase of 0.02 percent, profits in the majority of affected industries would be reduced by a maximum of about 0.1 percent.

In profit-earning entities, compliance costs can generally be expected to be absorbed through a combination of increases in prices or reduction in profits. As discussed above, the extent to which the impacts of cost increases affect prices or profits depends on the price elasticity of demand for the

products or services produced and sold by the entity.

In the case of cost increases that may be incurred due to the requirements of the proposal, all businesses within each of the covered industry sectors would be subject to the same requirements. Thus, to the extent potential price increases correspond to costs associated with achieving compliance with the proposed standards, the elasticity of demand for each entity will approach that faced by the industry as a whole.

Given the small incremental increases in prices potentially resulting from compliance with the proposed standards and the lack of readily available substitutes for the products and services provided by the covered industry sectors, demand is expected to be sufficiently inelastic in each affected industry to enable entities to substantially offset compliance costs through minor price increases without experiencing any significant reduction in total revenues or in net profits.

For the economy as a whole, OSHA expects the economic impact of the proposed rulemaking to be both an increase in the efficiency of production of goods and services and an improvement in the welfare of society. First, as demonstrated by the analysis of costs and benefits associated with compliance with the requirements of the proposed rule, OSHA expects that societal welfare will increase as a result of these standards, as the benefits achieved clearly and strongly justify the relatively small costs necessary. The impacts of the proposal involve net benefits of over $100 million that are achieved in a relatively cost-effective manner.

Second, many of the costs associated with the injuries and fatalities resulting from the risks addressed by the proposal have until now been externalized. That is, the costs incurred by society to protect workers exposed to falls during the production of certain goods and services have not been fully reflected in the prices of those products and services. The costs of production have been partly borne by workers who suffer the consequences associated with the activities causing the risks. To the extent that fewer of these costs are externalized, the price mechanism will enable the market to result in a more efficient allocation of resources. It should be noted that reductions in externalities by themselves do not necessarily increase efficiency or social welfare unless the costs of achieving the reductions are outweighed by the associated benefits.

OSHA concludes that compliance with the requirements of the proposal is economically feasible in every affected industry sector. This conclusion is based on the criteria established by the OSH Act, as interpreted in relevant case law. In general, the courts have held that a standard is economically feasible if there is a reasonable likelihood that the estimated costs of compliance "will not threaten the existence or competitive structure of an industry, even if it does portend disaster for some marginal firms" (*United Steelworkers of America* v. *Marshall,* 647 F.2d 1189, 1272 (DC Cir. 1980)). As demonstrated by the PEA and the supporting evidence, the potential impacts associated with achieving compliance with the proposal fall far within the bounds of economic feasibility in each industry sector.

OSHA does not expect compliance with the requirements of the proposal to threaten the viability of entities, or the existence or competitive structure of any of the affected industry sectors. In addition, based on an analysis of the costs and economic impacts associated with this rulemaking, OSHA preliminarily concludes that the effects of the proposal on international trade, employment, wages, and economic growth for the United States would be negligible.

H. Voluntary Initial Regulatory Flexibility Screening Analysis

The Regulatory Flexibility Act, as amended in 1996 (SBA, 1996), requires the preparation of an Initial Regulatory Flexibility Analysis (IRFA) for certain proposed rules (5 U.S.C. 601–612). Under the provisions of the law, each such analysis shall contain:

1. A description of the impact of the proposed rule on small entities;
2. A description of the reasons why action by the agency is being considered;
3. A succinct statement of the objectives of, and legal basis for, the proposed rule;
4. A description of and, where feasible, an estimate of the number of small entities to which the proposed rule will apply;
5. A description of the projected reporting, recordkeeping and other compliance requirements of the proposed rule, including an estimate of the classes of small entities which will be subject to the requirements and the type of professional skills necessary for preparation of the report or record;
6. An identification, to the extent practicable, of all relevant Federal rules which may duplicate, overlap or conflict with the proposed rule; and
7. A description and discussion of any significant alternatives to the proposed rule which accomplish the stated objectives of applicable statutes and which minimize any significant economic impact of the proposed rule on small entities, including

a. The establishment of differing compliance or reporting requirements or timetables that take into account the resources available to small entities;

b. The clarification, consolidation, or simplification of compliance and reporting requirements under the rule for such small entities;

c. The use of performance rather than design standards;

d. An exemption from coverage of the rule, or any part thereof, for such small entities.

The Regulatory Flexibility Act further states that the required elements of the IRFA may be performed in conjunction with, or as part of, any other agenda or analysis required by any other law if such other analysis satisfies the relevant provisions.

To determine the need for an IRFA, OSHA conducted a voluntary initial regulatory flexibility screening analysis to assess the potential impacts of the proposed standard on affected small entities. On the basis of the screening analysis, presented below, OSHA certifies that the proposed standard will not have a significant economic impact on a substantial number of small entities.

1. Impact of the Proposed Rule on Small Entities

Based on analysis by ERG (ERG, 2007, Ex. 6), OSHA estimated compliance costs and economic impacts for small entities affected by the proposed rule. Tables V–2 and V–3 in section C presented, respectively, the profiles for general industry entities classified as small according to Small Business Administration (SBA) criteria and for entities with fewer than 20 employees. ERG assigned costs to small entities by first determining the per-employee compliance costs for those cost items that are a function of the number of affected employees at a facility, and the per-establishment cost for those items that do not vary with establishment size. ERG then calculated, by industry, the average number of employees for each of the two classes of small entities, multiplied these averages by per-employee compliance cost, and then added the establishment-based cost to determine the average compliance cost for each type of small entity. These statistics, multiplied by the numbers of small entities, produced the total compliance costs in each industry incurred by small entities.

Table V–30 shows the resultant annualized compliance costs by industry sector for SBA-defined small entities, while Table V–31 shows the costs for entities with fewer than 20 employees. Compliance costs for small entities totaled $125.0 million, compared to $173.2 million for all establishments. Compliance costs for the smallest entities totaled $96.0 million.

OSHA calculated the economic impacts of these costs by comparing average compliance costs with average receipts and profits. These calculations are shown in Tables V–32 and V–33, presenting OSHA's preliminary assessment of impacts on small entities and very small entities (fewer than 20 employees). Among SBA-defined small entities, impacts of project compliance costs on profits were less than five percent for all industries, and these impacts were larger than 0.5 percent for only two industries: NAICS 2213, Water, Sewage and Other Systems (0.57 percent); and NAICS 5617, Services to Buildings and Dwellings (1.87 percent). For entities with fewer than 20 employees, compliance costs as a percent of profits were also less than five percent for all industries, and these impacts were larger than one percent for only two industries: NAICS 2213, Water, Sewage and Other Systems (1.24 percent); and NAICS 5617, Services to Buildings and Dwellings (3.34 percent).

BILLING CODE 4510–29–P

Table V-30
Compliance Costs for Small Business Entities Affected by OSHA's Proposed Standard (by 2-Digit NAICS)

		Annualized Compliance Costs								
		§1910.22	§1910.23	§1910.24	§1910.27	§1910.28	§1910.29	§1910.30	§1910.140	
NAICS	Industry Sector	General Requirements	Ladders	Step Bolts and Manhole Steps	Scaffolds	Duty to Have Fall Protection	Fall Protection Systems Criteria and Practices	Training Program	Fall Protection (including Hazard Assessment)	Total
11	Agriculture, Forestry, Fishing, and Hunting	$44,320	$7,847	$0	$0	$0	$0	$17,495	$41,378	$111,040
21	Mining	$28,137	$12,341	$0	$0	$0	$0	$240,434	$98,524	$379,437
22	Utilities	$20,180	$5,026	$1,865,746	$0	$0	$0	$56,977	$40,040	$1,987,968
31-33	Manufacturing	$1,144,778	$333,568	$0	$0	$0	$0	$2,756,002	$1,904,564	$6,138,912
42	Wholesale Trade	$1,630,738	$327,611	$0	$0	$0	$0	$2,595,018	$1,296,956	$5,850,322
44-45	Retail Trade	$1,906,383	$616,411	$0	$0	$0	$0	$2,498,837	$1,877,940	$6,899,571
48-49	Transportation	$558,141	$145,370	$0	$0	$0	$0	$1,341,129	$1,011,811	$3,056,451
51	Information	$321,114	$435,404	$30,550	$0	$0	$0	$5,267,298	$908,393	$6,962,759
52	Finance and Insurance	$204,230	$54,726	$0	$0	$0	$0	$14,395	$250,776	$524,127
53	Real Estate	$347,268	$366,929	$0	$0	$0	$0	$484,815	$384,612	$1,583,624
54	Professional, Scientific, and Technical Services	$1,601,851	$420,845	$0	$0	$79,856	$5,174,143	$1,696,580	$964,081	$9,937,355
55	Management	$24,724	$5,026	$0	$0	$0	$0	$35,130	$31,987	$96,867

Table V-30, contd.
Compliance Costs for Small Business Entities Affected by OSHA's Proposed Standard (by 2-Digit NAICS)

		Annualized Compliance Costs								
		§1910.22	§1910.23	§1910.24	§1910.27	§1910.28	§1910.29	§1910.30	§1910.140	
NAICS	Industry Sector	General Requirements	Ladders	Step Bolts and Manhole Steps	Scaffolds	Duty to Have Fall Protection	Fall Protection Systems Criteria and Practices	Training Program	Fall Protection (including Hazard Assessment)	Total
56	Administrative and Support, Waste Management and Remediation Services	$564,617	$268,409	$0	$69,527,746	$0	$0	$1,005,608	$379,838	$71,746,217
61	Educational Services	$130,892	$34,607	$0	$0	$0	$0	$4,277	$63,758	$233,534
62	Health Care	$1,118,808	$278,694	$0	$0	$0	$0	$114,021	$556,438	$2,067,961
71	Arts, Entertainment, and Recreation	$230,892	$96,531	$29,315	$0	$0	$0	$33,909	$101,196	$491,843
72	Accommodation and Food Services	$723,978	$189,747	$0	$0	$0	$0	$349,905	$460,836	$1,724,466
81	Other Services	$1,178,746	$1,063,825	$0	$0	$0	$0	$2,222,288	$757,542	$5,222,402
Total		**$11,779,799**	**$4,662,917**	**$1,925,610**	**$69,527,746**	**$79,856**	**$5,174,143**	**$20,734,117**	**$11,130,670**	**$125,014,859**

Source: U.S. Dept. of Labor, OSHA, Directorate of Evaluation and Analysis, Office of Regulatory Analysis, 2009, based on ERG, 2007.

Table V-31
Compliance Costs for Very Small Business Entities (fewer than 20 employees) Affected by OSHA's Proposed Standard

		Annualized Compliance Costs								
		§1910.22	§1910.23	§1910.24	§1910.27	§1910.28	§1910.29	§1910.30	§1910.140	
NAICS	Industry Sector	General Requirements	Ladders	Step Bolts and Manhole Steps	Scaffolds	Duty to Have Fall Protection	Fall Protection Systems Criteria and Practices	Training Program	Fall Protection (including Hazard Assessment)	Total
11	Agriculture, Forestry, Fishing, and Hunting	$42,207	$5,397	$0	$0	$0	$0	$12,208	$38,315	$98,127
21	Mining	$26,193	$5,573	$0	$0	$0	$0	$108,575	$61,371	$201,712
22	Utilities	$4,773	$1,170	$95,861	$0	$0	$0	$14,395	$33,666	$149,865
31-33	Manufacturing	$842,816	$52,851	$0	$0	$0	$0	$369,376	$984,331	$2,249,375
42	Wholesale Trade	$1,438,151	$156,645	$0	$0	$0	$0	$1,228,336	$902,479	$3,725,610
44-45	Retail Trade	$1,787,319	$433,098	$0	$0	$0	$0	$1,712,692	$1,672,872	$5,605,981
48-49	Transportation	$498,178	$37,980	$0	$0	$0	$0	$208,546	$673,358	$1,418,062
51	Information	$277,373	$17,574	$26,472	$0	$0	$0	$139,946	$126,608	$587,973
52	Finance and Insurance	$194,290	$45,197	$0	$0	$0	$0	$10,209	$242,632	$492,328
53	Real Estate	$334,043	$243,716	$0	$0	$0	$0	$313,669	$349,113	$1,240,541
54	Professional, Scientific, and Technical Services	$1,507,048	$228,497	$0	$0	$73,490	$2,230,201	$841,622	$786,762	$5,667,620

Table V-31, contd.

Compliance Costs for Very Small Business Entities (fewer than 20 employees) Affected by OSHA's Proposed Standard

		Annualized Compliance Costs								
		§1910.22	§1910.23	§1910.24	§1910.28	§1910.29	§1910.30	§1910.31	§1910.140	
NAICS	Industry Sector	General Requirements	Ladders	Step Bolts and Manhole Steps	Scaffolds	Duty to Have Fall Protection	Fall Protection Systems Criteria and Practices	Training Program	Fall Protection (including Hazard Assessment)	Total
55	Management	$12,578	$882	$0	$0	$0	$0	$6,167	$14,499	$34,125
56	Administrative and Support, Waste Management and Remediation Services	$510,698	$120,415	$0	$65,226,677	$0	$0	$482,432	$294,793	$66,635,015
61	Educational Services	$107,025	$14,316	$0	$0	$0	$0	$1,106	$50,050	$172,497
62	Health Care	$1,010,895	$175,739	$0	$0	$0	$0	$26,731	$478,008	$1,691,373
71	Arts, Entertainment, and Recreation	$204,799	$39,475	$29,315	$0	$0	$0	$12,565	$88,987	$375,142
72	Accommodation and Food Services	$580,222	$72,722	$0	$0	$0	$0	$139,205	$351,019	$1,143,169
81	Other Services	$1,158,124	$834,400	$0	$0	$0	$0	$1,795,842	$700,736	$4,489,102
Total		**$10,536,732**	**$2,485,649**	**$151,648**	**$65,226,677**	**$73,490**	**$2,230,201**	**$7,423,620**	**$7,849,601**	**$95,977,617**

Source: U.S. Dept. of Labor, OSHA, Directorate of Evaluation and Analysis, Office of Regulatory Analysis, 2009, based on ERG, 2007.

Table V-32
Average Cost Impacts on Small Business Entities Affected by OSHA's Proposed Revision to Subparts D and I (per Entity, by 4-Digit NAICS Code)

NAICS	Industry	SBA Employment Size Criterion [a]	Estimated Receipts, 2006 ($1,000)[b]	Entities [c]	Average Receipts per Entity	Profit Rate [d]		Estimated Profits per Entity	Estimated Cost of the Proposed Rule	Average Cost per Entity	Ratio of Average Cost to Revenues	Ratio of Average Cost to Profits
1131	Timber Tract Operations	500	$531,108	391	$1,358,331	4.36%	*	$59,280	$2,728	$6.98	0.001%	0.012%
1132	Forest Nurseries and Gathering of Forest Products	500	$141,119	169	$835,023	4.36%	*	$36,442	$1,366	$8.08	0.001%	0.022%
1133	Logging	500	$9,011,842	9,954	$905,349	4.36%	*	$39,511	$84,096	$8.45	0.001%	0.021%
1141	Fishing	20	$823,465	1,963	$419,493	5.93%	*	$24,896	$11,888	$6.06	0.001%	0.024%
1142	Hunting and Trapping	20	$87,850	331	$265,407	5.93%	*	$15,752	$2,020	$6.10	0.002%	0.039%
1153	Support Activities for Forestry	100	$1,064,696	1,581	$673,432	5.44%	*	$36,632	$10,087	$6.38	0.001%	0.017%
2111	Oil and Gas Extraction	500	$39,201,651	6,513	$6,018,985	14.88%		$895,704	$381,551	$58.58	0.001%	0.007%
2211	Electric Power Generation, Transmission and Distribution	20	$4,870,743	627	$7,768,331	4.44%		$344,881	$119,756	$191.00	0.002%	0.055%
2212	Natural Gas Distribution	20	$3,414,046	360	$9,483,461	2.98%		$282,516	$12,920	$35.89	0.000%	0.013%
2213	Water, Sewage and Other Systems	100	$4,597,701	4,357	$1,055,245	7.06%		$74,502	$1,857,158	$426.25	0.040%	0.572%

Table V-32, contd.
Average Cost Impacts on Small Business Entities Affected by OSHA's Proposed Revision to Subparts D and I (per Entity, by 4-Digit NAICS Code)

NAICS	Industry	SBA Employment Size Criterion [a]	Estimated Receipts, 2006 ($1,000)[b]	Entities [c]	Average Receipts per Entity	Profit Rate [d]		Estimated Profits per Entity	Estimated Cost of the Proposed Rule	Average Cost per Entity	Ratio of Average Cost to Revenues	Ratio of Average Cost to Profits
3111	Animal Food Manufactur-ing	500	$11,586,752	1,153	$10,049,222	4.24%		$426,530	$19,002	$16.48	0.000%	0.004%
3112	Grain and Oilseed Milling	500	$8,565,807	419	$20,443,453	4.24%	*	$867,703	$10,782	$25.73	0.000%	0.003%
3113	Sugar and Confectionery Product Manufactur-ing	500	$6,435,954	1,543	$4,171,065	7.68%		$320,384	$22,510	$14.59	0.000%	0.005%
3114	Fruit and Vegetable Preserving and Specialty Food Manufactur-ing	500	$14,303,459	1,206	$11,860,248	7.01%		$831,558	$27,950	$23.18	0.000%	0.003%
3115	Dairy Product Manufactur-ing	500	$15,799,030	1,008	$15,673,641	2.66%		$416,370	$23,972	$23.78	0.000%	0.006%
3116	Animal Slaughtering and Processing	500	$23,219,378	3,044	$7,627,917	2.41%		$183,595	$47,691	$15.67	0.000%	0.009%
3117	Seafood Product Preparation and Packaging	500	$4,945,815	553	$8,943,608	2.41%	*	$215,262	$9,574	$17.31	0.000%	0.008%
3118	Bakeries and Tortilla Manufacturing	500	$14,144,251	9,170	$1,542,448	10.13%		$156,209	$108,032	$11.78	0.001%	0.008%

Table V-32, contd.
Average Cost Impacts on Small Business Entities Affected by OSHA's Proposed Revision to Subparts D and I (per Entity, by 4-Digit NAICS Code)

NAICS	Industry	SBA Employment Size Criterion [a]	Estimated Receipts, 2006 ($1,000)[b]	Entities [c]	Average Receipts per Entity	Profit Rate [d]		Estimated Profits per Entity	Estimated Cost of the Proposed Rule	Average Cost per Entity	Ratio of Average Cost to Revenues	Ratio of Average Cost to Profits
3119	Other Food Manufacturing	500	$20,940,278	2,627	$7,971,176	5.68%		$452,443	$48,666	$18.53	0.000%	0.004%
3121	Beverage Manufacturing	500	$13,605,357	2,921	$4,657,774	6.64%	*	$309,416	$44,405	$15.20	0.000%	0.005%
3122	Tobacco Manufacturing	500	$1,237,022	80	$15,462,776	14.49%		$2,240,857	$2,252	$28.15	0.000%	0.001%
3131	Fiber, Yarn, and Thread Mills	500	$1,371,306	283	$4,845,605	4.31%	*	$209,048	$5,338	$18.86	0.000%	0.009%
3132	Fabric Mills	500	$5,555,538	1,107	$5,018,553	4.31%	*	$216,510	$20,477	$18.50	0.000%	0.009%
3133	Textile and Fabric Finishing and Fabric Coating Mills	500	$5,296,907	1,281	$4,134,978	4.31%	*	$178,391	$17,147	$13.39	0.000%	0.008%
3141	Textile Furnishings Mills	500	$5,191,592	2,381	$2,180,425	4.56%	*	$99,392	$25,462	$10.69	0.000%	0.011%
3149	Other Textile Product Mills	500	$6,820,309	3,982	$1,712,785	4.56%	*	$78,075	$40,536	$10.18	0.001%	0.013%
3151	Apparel Knitting Mills	500	$1,653,787	467	$3,541,300	3.16%		$111,970	$6,989	$14.97	0.000%	0.013%
3152	Cut and Sew Apparel Manufacturing	500	$17,420,394	9,286	$1,875,985	5.59%		$104,838	$71,419	$7.69	0.000%	0.007%

Table V-32, contd.
Average Cost Impacts on Small Business Entities Affected by OSHA's Proposed Revision to Subparts D and I (per Entity, by 4-Digit NAICS Code)

NAICS	Industry	SBA Employment Size Criterion [a]	Estimated Receipts, 2006 ($1,000)[b]	Entities [c]	Average Receipts per Entity	Profit Rate [d]		Estimated Profits per Entity	Estimated Cost of the Proposed Rule	Average Cost per Entity	Ratio of Average Cost to Revenues	Ratio of Average Cost to Profits
3159	Apparel Accessories and Other Apparel Manufacturing	500	$1,527,633	907	$1,684,270	4.66%		$78,477	$8,576	$9.46	0.001%	0.012%
3161	Leather and Hide Tanning and Finishing	500	$949,620	237	$4,006,835	6.10%	*	$244,271	$2,730	$11.52	0.000%	0.005%
3162	Footwear Manufacturing	500	$702,105	269	$2,610,054	6.10%	*	$159,118	$3,254	$12.10	0.000%	0.008%
3169	Other Leather and Allied Product Manufacturing	500	$1,710,845	815	$2,099,196	6.10%	*	$127,974	$6,867	$8.43	0.000%	0.007%
3211	Sawmills and Wood Preservation	500	$18,409,408	3,705	$4,968,801	4.08%	*	$202,716	$56,625	$15.28	0.000%	0.008%
3212	Veneer, Plywood, and Engineered Wood Product Manufacturing	500	$9,106,834	1,456	$6,254,693	4.08%	*	$255,178	$33,002	$22.67	0.000%	0.009%
3219	Other Wood Product Manufacturing	500	$26,640,305	9,431	$2,824,759	4.08%	*	$115,244	$134,039	$14.21	0.001%	0.012%

Table V-32, contd.
Average Cost Impacts on Small Business Entities Affected by OSHA's Proposed Revision to Subparts D and I (per Entity, by 4-Digit NAICS Code)

NAICS	Industry	SBA Employment Size Criterion [a]	Estimated Receipts, 2006 ($1,000)[b]	Entities [c]	Average Receipts per Entity	Profit Rate [d]		Estimated Profits per Entity	Estimated Cost of the Proposed Rule	Average Cost per Entity	Ratio of Average Cost to Revenues	Ratio of Average Cost to Profits
3221	Pulp, Paper, and Paperboard Mills	750	$48,518,798	271	$179,036,154	3.18%		$5,693,390	$131,803	$486.36	0.000%	0.009%
3222	Converted Paper Product Manufacturing	750	$70,328,911	2,996	$23,474,269	8.01%		$1,880,819	$263,738	$88.03	0.000%	0.005%
3231	Printing and Related Support Activities	500	$55,503,876	31,581	$1,757,509	4.37%	*	$76,839	$373,528	$11.83	0.001%	0.015%
3241	Petroleum and Coal Products Manufacturing	500	$19,354,003	1,049	$18,449,956	7.50%	*	$1,383,966	$90,147	$85.94	0.000%	0.006%
3251	Basic Chemical Manufacturing	500	$16,915,526	1,159	$14,594,931	4.58%		$668,454	$99,591	$85.93	0.001%	0.013%
3252	Resin, Synthetic Rubber, and Artificial Synthetic Fibers and Filaments Manufacturing	500	$48,236,858	719	$67,088,815	8.53%		$5,722,748	$162,725	$226.32	0.000%	0.004%

Table V-32, contd.
Average Cost Impacts on Small Business Entities Affected by OSHA's Proposed Revision to Subparts D and I (per Entity, by 4-Digit NAICS Code)

NAICS	Industry	SBA Employment Size Criterion [a]	Estimated Receipts, 2006 ($1,000)[b]	Entities [c]	Average Receipts per Entity	Profit Rate [d]	Estimated Profits per Entity	Estimated Cost of the Proposed Rule	Average Cost per Entity	Ratio of Average Cost to Revenues	Ratio of Average Cost to Profits
3253	Pesticide, Fertilizer, and Other Agricultural Chemical Manufacturing	500	$4,658,597	622	$7,489,706	11.10% *	$830,989	$32,026	$51.49	0.001%	0.006%
3254	Pharmaceutical and Medicine Manufacturing	500	$15,890,796	1,335	$11,903,218	16.64%	$1,980,224	$53,657	$40.19	0.000%	0.002%
3255	Paint, Coating, and Adhesive Manufacturing	500	$8,749,521	1,422	$6,152,968	5.38%	$331,299	$34,329	$24.14	0.000%	0.007%
3256	Soap, Cleaning Compound, and Toilet Preparation Manufacturing	500	$13,856,749	1,949	$7,109,671	9.21%	$654,480	$63,731	$32.70	0.000%	0.005%
3259	Other Chemical Product and Preparation Manufacturing	500	$13,034,111	2,004	$6,504,047	4.51%	$293,060	$66,174	$33.02	0.001%	0.011%
3261	Plastics Product Manufacturing	500	$55,961,244	9,231	$6,062,317	4.42%	$267,757	$170,232	$18.44	0.000%	0.007%

Table V-32, contd.
Average Cost Impacts on Small Business Entities Affected by OSHA's Proposed Revision to Subparts D and I (per Entity, by 4-Digit NAICS Code)

NAICS	Industry	SBA Employment Size Criterion [a]	Estimated Receipts, 2006 ($1,000)[b]	Entities [c]	Average Receipts per Entity	Profit Rate [d]		Estimated Profits per Entity	Estimated Cost of the Proposed Rule	Average Cost per Entity	Ratio of Average Cost to Revenues	Ratio of Average Cost to Profits
3262	Rubber Product Manufacturing	500	$8,374,986	1,622	$5,163,370	2.59%		$133,689	$30,315	$18.69	0.000%	0.014%
3271	Clay Product and Refractory Manufacturing	500	$3,447,657	1,308	$2,635,824	4.41%		$116,369	$34,863	$26.65	0.001%	0.023%
3272	Glass and Glass Product Manufacturing	500	$4,207,000	1,710	$2,460,234	3.42%		$84,162	$46,124	$26.97	0.001%	0.032%
3273	Cement and Concrete Product Manufacturing	500	$26,116,932	5,045	$5,176,795	6.64%		$343,640	$192,277	$38.11	0.001%	0.011%
3274	Lime and Gypsum Product Manufacturing	500	$842,666	209	$4,031,892	6.64%	*	$267,641	$6,473	$30.97	0.001%	0.012%
3279	Other Nonmetallic Mineral Product Manufacturing	500	$7,926,856	2,789	$2,842,186	5.49%	*	$156,008	$75,270	$26.99	0.001%	0.017%
3311	Iron and Steel Mills and Ferroalloy Manufacturing	750	$40,019,733	687	$58,252,886	4.49%		$2,616,713	$126,517	$184.16	0.000%	0.007%

Table V-32, contd.
Average Cost Impacts on Small Business Entities Affected by OSHA's Proposed Revision to Subparts D and I (per Entity, by 4-Digit NAICS Code)

NAICS	Industry	SBA Employment Size Criterion [a]	Estimated Receipts, 2006 ($1,000)[b]	Entities [c]	Average Receipts per Entity	Profit Rate [d]		Estimated Profits per Entity	Estimated Cost of the Proposed Rule	Average Cost per Entity	Ratio of Average Cost to Revenues	Ratio of Average Cost to Profits
3312	Steel Product Manufacturing from Purchased Steel	1000	$14,283,055	550	$25,969,191	4.49%	*	$1,166,533	$55,385	$100.70	0.000%	0.009%
3313	Alumina and Aluminum Production and Processing	750	$21,968,858	432	$50,853,839	4.46%		$2,270,588	$65,702	$152.09	0.000%	0.007%
3314	Nonferrous Metal (except Aluminum) Production and Processing	750	$18,670,645	726	$25,717,142	4.42%	*	$1,135,418	$64,541	$88.90	0.000%	0.008%
3315	Foundries	500	$10,738,647	1,825	$5,884,190	4.11%		$242,064	$50,629	$27.74	0.000%	0.011%
3321	Forging and Stamping	500	$14,466,604	2,307	$6,270,743	4.71%		$295,042	$56,962	$24.69	0.000%	0.008%
3322	Cutlery and Handtool Manufacturing	500	$4,572,233	1,321	$3,461,191	5.22%		$180,800	$22,601	$17.11	0.000%	0.009%
3323	Architectural and Structural Metals Manufacturing	500	$43,483,975	12,255	$3,548,264	4.70%		$166,905	$216,167	$17.64	0.000%	0.011%

Table V-32, contd.
Average Cost Impacts on Small Business Entities Affected by OSHA's Proposed Revision to Subparts D and I (per Entity, by 4-Digit NAICS Code)

NAICS	Industry	SBA Employment Size Criterion [a]	Estimated Receipts, 2006 ($1,000)[b]	Entities [c]	Average Receipts per Entity	Profit Rate [d]		Estimated Profits per Entity	Estimated Cost of the Proposed Rule	Average Cost per Entity	Ratio of Average Cost to Revenues	Ratio of Average Cost to Profits
3324	Boiler, Tank, and Shipping Container Manufacturing	500	$7,808,394	1,199	$6,512,422	3.58%		$233,378	$27,875	$23.25	0.000%	0.010%
3325	Hardware Manufacturing	500	$2,999,901	682	$4,398,682	5.22%	*	$229,771	$13,200	$19.36	0.000%	0.008%
3326	Spring and Wire Product Manufacturing	500	$5,666,580	1,423	$3,982,136	5.22%	*	$208,012	$27,309	$19.19	0.000%	0.009%
3327	Machine Shops; Turned Product; and Screw, Nut, and Bolt Manufacturing	500	$42,630,968	24,251	$1,757,906	5.80%	*	$101,926	$341,958	$14.10	0.001%	0.014%
3328	Coating, Engraving, Heat Treating, and Allied Activities	500	$14,338,761	5,471	$2,620,866	4.85%		$127,232	$85,446	$15.62	0.001%	0.012%
3329	Other Fabricated Metal Product Manufacturing	500	$20,878,322	5,544	$3,765,931	6.81%		$256,344	$102,786	$18.54	0.000%	0.007%

Table V-32, contd.
Average Cost Impacts on Small Business Entities Affected by OSHA's Proposed Revision to Subparts D and I (per Entity, by 4-Digit NAICS Code)

NAICS	Industry	SBA Employment Size Criterion [a]	Estimated Receipts, 2006 ($1,000)[b]	Entities [c]	Average Receipts per Entity	Profit Rate [d]	Estimated Profits per Entity	Estimated Cost of the Proposed Rule	Average Cost per Entity	Ratio of Average Cost to Revenues	Ratio of Average Cost to Profits
3331	Agriculture, Construction, and Mining Machinery Manufacturing	500	$14,142,378	2,531	$5,587,664	5.10%	$284,927	$55,797	$22.05	0.000%	0.008%
3332	Industrial Machinery Manufacturing	500	$16,139,442	3,546	$4,551,450	5.80%	$263,927	$71,918	$20.28	0.000%	0.008%
3333	Commercial and Service Industry Machinery Manufacturing	500	$9,026,736	2,021	$4,466,470	4.86%	$217,003	$41,662	$20.61	0.000%	0.009%
3334	Ventilation, Heating, Air-Conditioning, and Commercial Refrigeration Equipment Manufacturing	500	$8,642,252	1,383	$6,248,917	4.55%	$284,509	$33,942	$24.54	0.000%	0.009%
3335	Metalworking Machinery Manufacturing	500	$18,464,852	7,751	$2,382,254	5.29%	$126,005	$134,706	$17.38	0.001%	0.014%

Table V-32, contd.
Average Cost Impacts on Small Business Entities Affected by OSHA's Proposed Revision to Subparts D and I (per Entity, by 4-Digit NAICS Code)

NAICS	Industry	SBA Employment Size Criterion [a]	Estimated Receipts, 2006 ($1,000)[b]	Entities [c]	Average Receipts per Entity	Profit Rate [d]	Estimated Profits per Entity	Estimated Cost of the Proposed Rule	Average Cost per Entity	Ratio of Average Cost to Revenues	Ratio of Average Cost to Profits
3336	Engine, Turbine, and Power Transmission Equipment Manufacturing	500	$4,492,745	677	$6,636,256	2.63%	$174,330	$18,613	$27.49	0.000%	0.016%
3339	Other General Purpose Machinery Manufacturing	500	$24,599,462	5,307	$4,635,286	4.58%	$212,127	$112,354	$21.17	0.000%	0.010%
3341	Computer and Peripheral Equipment Manufacturing	1000	$53,748,275	1,253	$42,895,671	9.05%	$3,880,553	$41,810	$33.37	0.000%	0.001%
3342	Communications Equipment Manufacturing	750	$52,345,611	1,614	$32,432,225	4.57%	$1,483,069	$63,324	$39.23	0.000%	0.003%
3343	Audio and Video Equipment Manufacturing	750	$6,489,754	493	$13,163,802	4.52%	$595,164	$9,840	$19.96	0.000%	0.003%
3344	Semiconductor and Other Electronic Component Manufacturing	500	$23,442,895	4,007	$5,850,485	6.60%	$386,424	$90,131	$22.49	0.000%	0.006%

Table V-32, contd.
Average Cost Impacts on Small Business Entities Affected by OSHA's Proposed Revision to Subparts D and I (per Entity, by 4-Digit NAICS Code)

NAICS	Industry	SBA Employment Size Criterion [a]	Estimated Receipts, 2006 ($1,000)[b]	Entities [c]	Average Receipts per Entity	Profit Rate [d]		Estimated Profits per Entity	Estimated Cost of the Proposed Rule	Average Cost per Entity	Ratio of Average Cost to Revenues	Ratio of Average Cost to Profits
3345	Navigational, Measuring, Electromedical, and Control Instruments Manufacturing	500	$20,027,270	4,276	$4,683,646	5.94%		$278,325	$84,502	$19.76	0.000%	0.007%
3346	Manufacturing and Reproducing Magnetic and Optical Media	500	$2,650,560	753	$3,520,000	4.52%	*	$159,147	$10,997	$14.60	0.000%	0.009%
3351	Electric Lighting Equipment Manufacturing	500	$5,477,193	1,060	$5,167,163	4.21%		$217,702	$19,944	$18.82	0.000%	0.009%
3352	Household Appliance Manufacturing	500	$2,582,026	273	$9,457,971	4.21%		$398,482	$5,543	$20.30	0.000%	0.005%
3353	Electrical Equipment Manufacturing	500	$25,859,479	2,027	$12,757,513	7.15%		$911,912	$61,490	$30.34	0.000%	0.003%
3359	Other Electrical Equipment and Component Manufacturing	500	$11,236,380	1,680	$6,688,321	5.41%		$361,993	$39,096	$23.27	0.000%	0.006%

Table V-32, contd.
Average Cost Impacts on Small Business Entities Affected by OSHA's Proposed Revision to Subparts D and I (per Entity, by 4-Digit NAICS Code)

NAICS	Industry	SBA Employment Size Criterion [a]	Estimated Receipts, 2006 ($1,000)[b]	Entities [c]	Average Receipts per Entity	Profit Rate [d]		Estimated Profits per Entity	Estimated Cost of the Proposed Rule	Average Cost per Entity	Ratio of Average Cost to Revenues	Ratio of Average Cost to Profits
3361	Motor Vehicle Manufacturing	1000	$221,822,962	294	$754,499,871	4.87%		$36,715,275	$122,170	$415.54	0.000%	0.001%
3362	Motor Vehicle Body and Trailer Manufacturing	500	$10,954,033	1,790	$6,119,572	2.04%	*	$124,868	$42,268	$23.61	0.000%	0.019%
3363	Motor Vehicle Parts Manufacturing	500	$31,889,932	4,100	$7,778,032	2.04%	*	$158,708	$118,754	$28.96	0.000%	0.018%
3364	Aerospace Product and Parts Manufacturing	1000	$135,707,957	1,280	$106,021,841	2.04%		$2,163,341	$218,357	$170.59	0.000%	0.008%
3365	Railroad Rolling Stock Manufacturing	1000	$8,758,234	156	$56,142,525	4.16%	*	$2,336,926	$15,401	$98.72	0.000%	0.004%
3366	Ship and Boat Building	500	$7,331,514	1,587	$4,619,732	2.72%		$125,786	$146,637	$92.40	0.002%	0.073%
3369	Other Transportation Equipment Manufacturing	500	$3,355,487	930	$3,608,050	5.86%		$211,496	$15,978	$17.18	0.000%	0.008%

Table V-32, contd.
Average Cost Impacts on Small Business Entities Affected by OSHA's Proposed Revision to Subparts D and I (per Entity, by 4-Digit NAICS Code)

NAICS	Industry	SBA Employment Size Criterion [a]	Estimated Receipts, 2006 ($1,000)[b]	Entities [c]	Average Receipts per Entity	Profit Rate [d]		Estimated Profits per Entity	Estimated Cost of the Proposed Rule	Average Cost per Entity	Ratio of Average Cost to Revenues	Ratio of Average Cost to Profits
3371	Household and Institutional Furniture and Kitchen Cabinet Manufacturing	500	$23,902,056	15,751	$1,517,495	6.31%	*	$95,743	$168,098	$10.67	0.001%	0.011%
3372	Office Furniture (including Fixtures) Manufacturing	500	$12,610,030	3,833	$3,289,859	4.54%	*	$149,463	$58,259	$15.20	0.000%	0.010%
3379	Other Furniture Related Product Manufacturing	500	$3,902,416	893	$4,370,007	4.54%	*	$198,535	$13,182	$14.76	0.000%	0.007%
3391	Medical Equipment and Supplies Manufacturing	500	$22,346,188	11,222	$1,991,284	4.54%		$90,467	$148,757	$13.26	0.001%	0.015%
3399	Other Miscellaneous Manufacturing	500	$41,469,547	18,301	$2,265,972	10.77%		$244,024	$247,559	$13.53	0.001%	0.006%

Table V-32, contd.
Average Cost Impacts on Small Business Entities Affected by OSHA's Proposed Revision to Subparts D and I (per Entity, by 4-Digit NAICS Code)

NAICS	Industry	SBA Employment Size Criterion [a]	Estimated Receipts, 2006 ($1,000)[b]	Entities [c]	Average Receipts per Entity	Profit Rate [d]		Estimated Profits per Entity	Estimated Cost of the Proposed Rule	Average Cost per Entity	Ratio of Average Cost to Revenues	Ratio of Average Cost to Profits
4231	Motor Vehicle and Motor Vehicle Parts and Supplies Merchant Wholesalers	100	$67,493,706	16,947	$3,982,634	5.80%		$230,815	$387,697	$22.88	0.001%	0.010%
4232	Furniture and Home Furnishing Merchant Wholesalers	100	$41,018,359	10,534	$3,893,902	2.76%	*	$107,388	$152,635	$14.49	0.000%	0.013%
4233	Lumber and Other Construction Materials Merchant Wholesalers	100	$61,571,212	12,053	$5,108,372	2.90%		$148,349	$286,024	$23.73	0.000%	0.016%
4234	Professional and Commercial Equipment and Supplies Merchant Wholesalers	100	$80,400,547	25,574	$3,143,839	3.04%		$95,623	$600,732	$23.49	0.001%	0.025%

Table V-32, contd.
Average Cost Impacts on Small Business Entities Affected by OSHA's Proposed Revision to Subparts D and I (per Entity, by 4-Digit NAICS Code)

NAICS	Industry	SBA Employment Size Criterion [a]	Estimated Receipts, 2006 ($1,000)[b]	Entities [c]	Average Receipts per Entity	Profit Rate [d]	Estimated Profits per Entity	Estimated Cost of the Proposed Rule	Average Cost per Entity	Ratio of Average Cost to Revenues	Ratio of Average Cost to Profits
4235	Metal and Mineral (except Petroleum) Merchant Wholesalers	100	$53,277,572	7,008	$7,602,393	2.78%	$211,476	$131,605	$18.78	0.000%	0.009%
4236	Electrical and Electronic Goods Merchant Wholesalers	100	$106,184,274	18,906	$5,616,433	2.69%	$151,032	$454,721	$24.05	0.000%	0.016%
4237	Hardware, and Plumbing and Heating Equipment and Supplies Merchant Wholesalers	100	$52,630,025	10,687	$4,924,677	2.28%	$112,133	$272,393	$25.49	0.001%	0.023%
4238	Machinery, Equipment, and Supplies Merchant Wholesalers	100	$157,283,920	41,847	$3,758,547	2.99%	$112,380	$1,163,045	$27.79	0.001%	0.025%

Table V-32, contd.
Average Cost Impacts on Small Business Entities Affected by OSHA's Proposed Revision to Subparts D and I (per Entity, by 4-Digit NAICS Code)

NAICS	Industry	SBA Employment Size Criterion [a]	Estimated Receipts, 2006 ($1,000)[b]	Entities [c]	Average Receipts per Entity	Profit Rate [d]	Estimated Profits per Entity	Estimated Cost of the Proposed Rule	Average Cost per Entity	Ratio of Average Cost to Revenues	Ratio of Average Cost to Profits
4239	Miscellaneous Durable Goods Merchant Wholesalers	100	$113,497,575	30,319	$3,743,447	3.44%	$128,610	$510,009	$16.82	0.000%	0.013%
4241	Paper and Paper Product Merchant Wholesalers	100	$33,943,943	8,831	$3,843,726	2.90%	$111,624	$108,103	$12.24	0.000%	0.011%
4242	Drugs and Druggists' Sundries Merchant Wholesalers	100	$28,512,763	5,771	$4,940,697	2.12%	$104,989	$56,937	$9.87	0.000%	0.009%
4243	Apparel, Piece Goods, and Notions Merchant Wholesalers	100	$56,811,005	14,025	$4,050,696	3.46%	$139,966	$116,564	$8.31	0.000%	0.006%
4244	Grocery and Related Product Wholesalers	100	$147,326,164	26,011	$5,663,995	4.79%	$271,537	$389,833	$14.99	0.000%	0.006%

Table V-32, contd.
Average Cost Impacts on Small Business Entities Affected by OSHA's Proposed Revision to Subparts D and I (per Entity, by 4-Digit NAICS Code)

NAICS	Industry	SBA Employment Size Criterion [a]	Estimated Receipts, 2006 ($1,000)[b]	Entities [c]	Average Receipts per Entity	Profit Rate [d]	Estimated Profits per Entity	Estimated Cost of the Proposed Rule	Average Cost per Entity	Ratio of Average Cost to Revenues	Ratio of Average Cost to Profits
4245	Farm Product Raw Material Merchant Wholesalers	100	$46,454,270	3,917	$11,859,655	2.59%	$307,429	$54,373	$13.88	0.000%	0.005%
4246	Chemical and Allied Products Merchant Wholesalers	100	$38,347,058	8,109	$4,728,950	2.28%	$107,814	$166,388	$20.52	0.000%	0.019%
4247	Petroleum and Petroleum Products Merchant Wholesalers	100	$81,420,533	4,585	$17,758,022	3.16%	$561,910	$129,389	$28.22	0.000%	0.005%
4248	Beer, Wine, and Distilled Alcoholic Beverage Merchant Wholesalers	100	$15,021,979	2,915	$5,153,337	2.00%	$102,904	$47,019	$16.13	0.000%	0.016%
4249	Miscellaneous Nondurable Goods Merchant Wholesalers	100	$79,666,689	24,935	$3,194,974	3.92%	$125,176	$257,694	$10.33	0.000%	0.008%

Table V-32, contd.
Average Cost Impacts on Small Business Entities Affected by OSHA's Proposed Revision to Subparts D and I (per Entity, by 4-Digit NAICS Code)

NAICS	Industry	SBA Employment Size Criterion [a]	Estimated Receipts, 2006 ($1,000)[b]	Entities [c]	Average Receipts per Entity	Profit Rate [d]		Estimated Profits per Entity	Estimated Cost of the Proposed Rule	Average Cost per Entity	Ratio of Average Cost to Revenues	Ratio of Average Cost to Profits
4251	Wholesale Electronic Markets and Agents and Brokers	100	$138,405,824	51,805	$2,671,669	3.18%	*	$85,033	$637,265	$12.30	0.000%	0.014%
4411	Automobile Dealers	20	$76,660,409	32,728	$2,342,349	7.14%		$167,239	$502,832	$15.36	0.001%	0.009%
4412	Other Motor Vehicle Dealers	100	$48,556,697	15,119	$3,211,634	1.18%	**	$37,933	$341,166	$22.57	0.001%	0.059%
4413	Automotive Parts, Accessories, and Tire Stores	100	$46,568,390	33,491	$1,390,475	2.78%	*	$38,613	$607,418	$18.14	0.001%	0.047%
4421	Furniture Stores	100	$32,587,738	20,814	$1,565,664	1.45%	*	$22,640	$205,855	$9.89	0.001%	0.044%
4422	Home Furnishings Stores	100	$40,222,908	26,848	$1,498,171	3.63%	*	$54,429	$324,363	$12.08	0.001%	0.022%
4431	Electronics and Appliance Stores	20	$20,267,091	29,639	$683,798	3.63%	*	$24,843	$342,454	$11.55	0.002%	0.047%
4441	Building Material and Supplies Dealers	100	$87,061,081	45,150	$1,928,263	3.52%	*	$67,875	$653,791	$14.48	0.001%	0.021%

Table V-32, contd.
Average Cost Impacts on Small Business Entities Affected by OSHA's Proposed Revision to Subparts D and I (per Entity, by 4-Digit NAICS Code)

NAICS	Industry	SBA Employment Size Criterion [a]	Estimated Receipts, 2006 ($1,000)[b]	Entities [c]	Average Receipts per Entity	Profit Rate [d]		Estimated Profits per Entity	Estimated Cost of the Proposed Rule	Average Cost per Entity	Ratio of Average Cost to Revenues	Ratio of Average Cost to Profits
4442	Lawn and Garden Equipment and Supplies Stores	100	$28,644,941	16,849	$1,700,097	7.87%	**	$133,779	$218,791	$12.99	0.001%	0.010%
4451	Grocery Stores	100	$71,278,538	65,674	$1,085,339	2.20%	*	$23,923	$368,811	$5.62	0.001%	0.023%
4452	Specialty Food Stores	100	$23,618,662	23,118	$1,021,657	2.07%	*	$21,111	$128,451	$5.56	0.001%	0.026%
4453	Beer, Wine, and Liquor Stores	100	$64,409,298	26,694	$2,412,875	2.07%	*	$49,858	$118,858	$4.45	0.000%	0.009%
4461	Health and Personal Care Stores	100	$103,061,742	43,486	$2,369,998	2.34%	*	$55,523	$315,134	$7.25	0.000%	0.013%
4471	Gasoline Stations	100	$175,379,922	66,667	$2,630,686	2.94%	*	$77,229	$669,222	$10.04	0.000%	0.013%
4481	Clothing Stores	100	$40,540,430	40,472	$1,001,691	1.01%	*	$10,141	$279,768	$6.91	0.001%	0.068%
4482	Shoe Stores	100	$8,163,382	6,628	$1,231,651	5.53%	*	$68,164	$42,141	$6.36	0.001%	0.009%
4483	Jewelry, Luggage, and Leather Goods Stores	100	$33,225,494	19,501	$1,703,784	5.53%	*	$94,293	$161,291	$8.27	0.000%	0.009%
4511	Sporting Goods, Hobby, and Musical Instrument Stores	100	$32,209,320	31,727	$1,015,202	5.53%	*	$56,185	$346,326	$10.92	0.001%	0.019%

Table V-32, contd.
Average Cost Impacts on Small Business Entities Affected by OSHA's Proposed Revision to Subparts D and I (per Entity, by 4-Digit NAICS Code)

NAICS	Industry	SBA Employment Size Criterion [a]	Estimated Receipts, 2006 ($1,000)[b]	Entities [c]	Average Receipts per Entity	Profit Rate [d]		Estimated Profits per Entity	Estimated Cost of the Proposed Rule	Average Cost per Entity	Ratio of Average Cost to Revenues	Ratio of Average Cost to Profits
4512	Book, Periodical, and Music Stores	100	$7,011,457	9,324	$751,979	3.00%	*	$22,549	$54,134	$5.81	0.001%	0.026%
4521	Department Stores	100	$664,966	310	$2,145,052	3.00%	*	$64,322	$2,518	$8.12	0.000%	0.013%
4529	Other General Merchandise Stores	100	$6,617,747	10,142	$652,509	4.26%	*	$27,771	$98,639	$9.73	0.001%	0.035%
4531	Florists	100	$13,839,926	19,337	$715,722	4.26%	*	$30,462	$73,313	$3.79	0.001%	0.012%
4532	Office Supplies, Stationery, and Gift Stores	500	$17,156,929	29,601	$579,606	3.60%	*	$20,845	$306,121	$10.34	0.002%	0.050%
4533	Used Merchandise Stores	100	$9,049,563	12,837	$704,959	3.60%	*	$25,354	$78,142	$6.09	0.001%	0.024%
4539	Other Miscellaneous Store Retailers	100	$59,007,366	36,894	$1,599,376	3.60%	*	$57,521	$402,323	$10.90	0.001%	0.019%
4541	Electronic Shopping and Mail-Order Houses	100	$24,332,706	14,640	$1,662,070	3.60%	*	$59,776	$106,603	$7.28	0.000%	0.012%
4542	Vending Machine Operators	100	$3,932,387	4,584	$857,851	4.05%	*	$34,733	$70,639	$15.41	0.002%	0.044%

Table V-32, contd.
Average Cost Impacts on Small Business Entities Affected by OSHA's Proposed Revision to Subparts D and I (per Entity, by 4-Digit NAICS Code)

NAICS	Industry	SBA Employment Size Criterion [a]	Estimated Receipts, 2006 ($1,000)[b]	Entities [c]	Average Receipts per Entity	Profit Rate [d]		Estimated Profits per Entity	Estimated Cost of the Proposed Rule	Average Cost per Entity	Ratio of Average Cost to Revenues	Ratio of Average Cost to Profits
4543	Direct Selling Establishments	20	$17,714,226	19,468	$909,915	4.05%	*	$36,841	$222,184	$11.41	0.001%	0.031%
4811	Scheduled Air Transportation	1500	$82,476,027	537	$153,586,642	4.05%	*	$6,218,478	$830,899	$1,547.30	0.001%	0.025%
4812	Nonscheduled Air Transportation	1500	$12,469,634	2,342	$5,324,353	2.98%	*	$158,600	$97,707	$41.72	0.001%	0.026%
4831	Deep Sea, Coastal, and Great Lakes Water Transportation	20	$7,219,700	826	$8,740,557	2.98%	*	$260,361	$23,583	$28.55	0.000%	0.011%
4832	Inland Water Transportation	500	$2,203,565	563	$3,913,969	6.58%	*	$257,606	$12,436	$22.09	0.001%	0.009%
4841	General Freight Trucking	500	$66,802,656	56,935	$1,173,314	6.58%	*	$77,224	$724,903	$12.73	0.001%	0.016%
4842	Specialized Freight Trucking	500	$51,583,669	48,733	$1,058,496	2.80%	*	$29,642	$547,555	$11.24	0.001%	0.038%
4851	Urban Transit Systems	100	$266,539	533	$500,073	2.80%	*	$14,004	$7,178	$13.47	0.003%	0.096%
4852	Interurban and Rural Bus Transportation	100	$145,946	195	$748,442	2.52%	*	$18,856	$2,989	$15.33	0.002%	0.081%

Table V-32, contd.
Average Cost Impacts on Small Business Entities Affected by OSHA's Proposed Revision to Subparts D and I (per Entity, by 4-Digit NAICS Code)

NAICS	Industry	SBA Employment Size Criterion [a]	Estimated Receipts, 2006 ($1,000)[b]	Entities [c]	Average Receipts per Entity	Profit Rate [d]		Estimated Profits per Entity	Estimated Cost of the Proposed Rule	Average Cost per Entity	Ratio of Average Cost to Revenues	Ratio of Average Cost to Profits
4853	Taxi and Limousine Service	500	$4,421,967	6,894	$641,423	2.52%	*	$16,160	$48,685	$7.06	0.001%	0.044%
4854	School and Employee Bus Transportation	100	$994,731	2,788	$356,790	2.52%	*	$8,989	$31,831	$11.42	0.003%	0.127%
4855	Charter Bus Industry	500	$1,513,013	1,087	$1,391,916	2.52%	*	$35,067	$13,042	$12.00	0.001%	0.034%
4859	Other Transit and Ground Passenger Transportation	500	$2,495,769	2,974	$839,196	2.52%	*	$21,142	$28,189	$9.48	0.001%	0.045%
4861	Pipeline Transportation of Crude Oil	1500	$5,690,561	55	$103,464,750	2.52%	*	$2,606,634	$13,721	$249.47	0.000%	0.010%
4862	Pipeline Transportation of Natural Gas	500	$2,699,151	87	$31,024,724	14.28%	*	$4,429,459	$4,587	$52.73	0.000%	0.001%
4869	Other Pipeline Transportation	500	$537,344	50	$10,746,871	14.28%	*	$1,534,351	$2,326	$46.52	0.000%	0.003%
4871	Scenic and Sightseeing Transportation, Land	500	$526,584	609	$864,670	14.28%	*	$123,451	$3,918	$6.43	0.001%	0.005%

Table V-32, contd.
Average Cost Impacts on Small Business Entities Affected by OSHA's Proposed Revision to Subparts D and I (per Entity, by 4-Digit NAICS Code)

NAICS	Industry	SBA Employment Size Criterion [a]	Estimated Receipts, 2006 ($1,000)[b]	Entities [c]	Average Receipts per Entity	Profit Rate [d]		Estimated Profits per Entity	Estimated Cost of the Proposed Rule	Average Cost per Entity	Ratio of Average Cost to Revenues	Ratio of Average Cost to Profits
4872	Scenic and Sightseeing Transportation, Water	500	$1,050,400	1,819	$577,460	5.04%	*	$29,108	$12,714	$6.99	0.001%	0.024%
4879	Scenic and Sightseeing Transportation, Other	100	$1,437,311	172	$8,356,457	5.04%	*	$421,217	$2,067	$12.02	0.000%	0.003%
4881	Support Activities for Air Transportation	100	$4,378,170	3,655	$1,197,858	5.04%	**	$60,379	$68,700	$18.80	0.002%	0.031%
4882	Support Activities for Rail Transportation	100	$669,617	428	$1,564,525	3.61%	**	$56,472	$10,063	$23.51	0.002%	0.042%
4883	Support Activities for Water Transportation	100	$2,453,950	1,680	$1,460,685	3.61%	**	$52,724	$39,977	$23.80	0.002%	0.045%
4884	Support Activities for Road Transportation	100	$6,329,358	8,748	$723,521	3.61%	**	$26,116	$99,648	$11.39	0.002%	0.044%

Table V-32, contd.
Average Cost Impacts on Small Business Entities Affected by OSHA's Proposed Revision to Subparts D and I (per Entity, by 4-Digit NAICS Code)

NAICS	Industry	SBA Employment Size Criterion [a]	Estimated Receipts, 2006 ($1,000)[b]	Entities [c]	Average Receipts per Entity	Profit Rate [d]		Estimated Profits per Entity	Estimated Cost of the Proposed Rule	Average Cost per Entity	Ratio of Average Cost to Revenues	Ratio of Average Cost to Profits
4885	Freight Transportation Arrangement	100	$18,658,005	12,524	$1,489,780	3.61%	**	$53,774	$101,741	$8.12	0.001%	0.015%
4889	Other Support Activities for Transportation	100	$1,035,182	1,459	$709,514	3.61%	**	$25,610	$14,449	$9.90	0.001%	0.039%
4921	Couriers	1500	$63,131,495	3,577	$17,649,286	3.61%	**	$637,052	$228,529	$63.89	0.000%	0.010%
4922	Local Messengers and Local Delivery	500	$2,806,493	4,492	$624,776	3.61%	**	$22,551	$33,214	$7.39	0.001%	0.033%
4931	Warehousing and Storage	100	$6,281,678	5,029	$1,249,091	3.61%	*	$45,086	$78,855	$15.68	0.001%	0.035%
5111	Newspaper, Periodical, Book, and Directory Publishers	500	$35,343,446	16,475	$2,145,277	5.03%	*	$107,843	$129,956	$7.89	0.000%	0.007%
5112	Software Publishers	500	$21,389,021	5,959	$3,589,364	12.58%	*	$451,447	$81,058	$13.60	0.000%	0.003%
5121	Motion Picture and Video Industries	500	$21,590,603	16,854	$1,281,037	17.36%	**	$222,384	$100,740	$5.98	0.000%	0.003%
5122	Sound Recording Industries	100	$3,196,164	3,271	$977,122	6.35%	**	$62,061	$29,540	$9.03	0.001%	0.015%

Table V-32, contd.
Average Cost Impacts on Small Business Entities Affected by OSHA's Proposed Revision to Subparts D and I (per Entity, by 4-Digit NAICS Code)

NAICS	Industry	SBA Employment Size Criterion [a]	Estimated Receipts, 2006 ($1,000)[b]	Entities [c]	Average Receipts per Entity	Profit Rate [d]		Estimated Profits per Entity	Estimated Cost of the Proposed Rule	Average Cost per Entity	Ratio of Average Cost to Revenues	Ratio of Average Cost to Profits
5151	Radio and Television Broadcasting	20	$1,953,574	3,564	$548,141	8.41%	*	$46,085	$45,001	$12.63	0.002%	0.027%
5152	Cable and Other Subscription Programming	500	$2,631,070	355	$7,411,465	7.05%	*	$522,162	$56,537	$159.26	0.002%	0.030%
5161	Internet Publishing and Broadcasting	500	$7,055,534	2,310	$3,054,344	7.05%	*	$215,189	$20,926	$9.06	0.000%	0.004%
5171	Wired Telecommunications Carriers	1500	$219,175,789	2,515	$87,147,431	7.40%	*	$6,447,517	$5,177,369	$2,058.60	0.002%	0.032%
5172	Wireless Telecommunications Carriers (except Satellite)	1500	$72,464,427	2,516	$28,801,441	6.69%	*	$1,925,829	$1,032,537	$410.39	0.001%	0.021%
5173	Telecommunications Resellers	1500	$9,724,163	2,278	$4,268,728	6.69%	*	$285,432	$23,585	$10.35	0.000%	0.004%
5174	Satellite Telecommunications	1000	$5,833,356	434	$13,440,913	6.69%	*	$898,736	$95,578	$220.23	0.002%	0.025%
5175	Cable and Other Program Distribution	1000	$57,921,997	1,141	$50,764,239	6.69%	*	$3,394,387	$13,617	$11.93	0.000%	0.000%

Table V-32, contd.
Average Cost Impacts on Small Business Entities Affected by OSHA's Proposed Revision to Subparts D and I (per Entity, by 4-Digit NAICS Code)

NAICS	Industry	SBA Employment Size Criterion [a]	Estimated Receipts, 2006 ($1,000)[b]	Entities [c]	Average Receipts per Entity	Profit Rate [d]		Estimated Profits per Entity	Estimated Cost of the Proposed Rule	Average Cost per Entity	Ratio of Average Cost to Revenues	Ratio of Average Cost to Profits
5179	Other Telecommunications	1000	$3,318,847	439	$7,560,016	6.69%	*	$505,506	$14,662	$33.40	0.000%	0.007%
5181	Internet Service Providers and Web Search Portals	1000	$25,874,451	4,907	$5,272,967	6.69%	*	$352,581	$28,118	$5.73	0.000%	0.002%
5182	Data Processing, Hosting, and Related Services	1000	$69,257,352	7,545	$9,179,238	7.45%	*	$683,437	$59,256	$7.85	0.000%	0.001%
5191	Other Information Services	1000	$5,983,256	3,278	$1,825,276	7.45%	*	$135,900	$27,940	$8.52	0.000%	0.006%
5211	Monetary Authorities - Central Bank	1000	$27,044,980	69	$391,956,231	8.94%	*	$35,042,473	$904	$13.10	0.000%	0.000%
5221	Depository Credit Intermediation	20	$11,350,517	7,957	$1,426,482	15.59%	*	$222,413	$33,848	$4.25	0.000%	0.002%
5222	Nondepository Credit Intermediation	100	$30,297,739	23,383	$1,295,717	11.43%	*	$148,097	$64,301	$2.75	0.000%	0.002%

Table V-32, contd.
Average Cost Impacts on Small Business Entities Affected by OSHA's Proposed Revision to Subparts D and I (per Entity, by 4-Digit NAICS Code)

NAICS	Industry	SBA Employment Size Criterion [a]	Estimated Receipts, 2006 ($1,000)[b]	Entities [c]	Average Receipts per Entity	Profit Rate [d]		Estimated Profits per Entity	Estimated Cost of the Proposed Rule	Average Cost per Entity	Ratio of Average Cost to Revenues	Ratio of Average Cost to Profits
5223	Activities Related to Credit Intermediation	20	$12,461,500	26,458	$470,992	9.01%	**	$42,442	$87,199	$3.30	0.001%	0.008%
5231	Securities and Commodity Contracts Intermediation and Brokerage	100	$21,135,025	12,818	$1,648,855	10.15%	*	$167,396	$64,887	$5.06	0.000%	0.003%
5232	Securities and Commodity Exchanges	100	$410,538	121	$3,392,876	10.11%	*	$343,031	$587	$4.85	0.000%	0.001%
5239	Other Financial Investment Activities	100	$61,324,608	40,791	$1,503,386	10.11%	*	$151,997	$112,593	$2.76	0.000%	0.002%
5241	Insurance Carriers	100	$23,958,122	6,794	$3,526,365	28.35%	*	$999,796	$25,116	$3.70	0.000%	0.000%
5242	Agencies, Brokerages, and Other Insurance Related Activities	20	$51,888,775	125,791	$412,500	5.12%	*	$21,110	$198,180	$1.58	0.000%	0.007%
5259	Other Investment Pools and Funds	20	$4,409,909	1,957	$2,253,403	5.12%	*	$115,317	$6,908	$3.53	0.00%	0.003%

Table V-32, contd.
Average Cost Impacts on Small Business Entities Affected by OSHA's Proposed Revision to Subparts D and I (per Entity, by 4-Digit NAICS Code)

NAICS	Industry	SBA Employment Size Criterion [a]	Estimated Receipts, 2006 ($1,000)[b]	Entities [c]	Average Receipts per Entity	Profit Rate [d]		Estimated Profits per Entity	Estimated Cost of the Proposed Rule	Average Cost per Entity	Ratio of Average Cost to Revenues	Ratio of Average Cost to Profits
5311	Lessors of Real Estate	100	$148,693,866	96,670	$1,538,159	64.80%	*	$996,706	$524,319	$5.42	0.000%	0.001%
5312	Offices of Real Estate Agents and Brokers	100	$143,390,526	104,985	$1,365,819	13.34%	*	$182,251	$431,345	$4.11	0.000%	0.002%
5313	Activities Related to Real Estate	100	$49,114,760	70,681	$694,879	9.66%	*	$67,105	$467,072	$6.61	0.001%	0.010%
5321	Automotive Equipment Rental and Leasing	500	$8,801,407	4,637	$1,898,082	13.34%	**	$253,275	$33,683	$7.26	0.000%	0.003%
5322	Consumer Goods Rental	100	$8,493,082	12,468	$681,190	3.20%	*	$21,794	$64,736	$5.19	0.001%	0.024%
5323	General Rental Centers	100	$3,472,807	3,274	$1,060,723	4.58%	*	$48,548	$21,450	$6.55	0.001%	0.013%
5324	Commercial and Industrial Machinery and Equipment Rental and Leasing	100	$13,912,374	8,257	$1,684,919	4.58%	**	$77,116	$83,017	$10.05	0.001%	0.013%

Table V-32, contd.
Average Cost Impacts on Small Business Entities Affected by OSHA's Proposed Revision to Subparts D and I (per Entity, by 4-Digit NAICS Code)

NAICS	Industry	SBA Employment Size Criterion [a]	Estimated Receipts, 2006 ($1,000)[b]	Entities [c]	Average Receipts per Entity	Profit Rate [d]		Estimated Profits per Entity	Estimated Cost of the Proposed Rule	Average Cost per Entity	Ratio of Average Cost to Revenues	Ratio of Average Cost to Profits
5331	Lessors of Nonfinancial Intangible Assets (except Copyrighted Works)	100	$5,109,465	2,042	$2,502,187	6.44%	*	$161,253	$8,080	$3.96	0.000%	0.002%
5411	Legal Services	100	$150,407,808	179,461	$838,109	31.10%	**	$260,688	$527,647	$2.94	0.000%	0.001%
5412	Accounting, Tax Preparation, Bookkeeping, and Payroll Services	500	$55,823,703	106,052	$526,380	8.85%	**	$46,569	$589,466	$5.56	0.001%	0.012%
5413	Architectural, Engineering, and Related Services	100	$89,596,342	98,506	$909,552	8.74%	**	$79,539	$980,971	$9.96	0.001%	0.013%
5414	Specialized Design Services	100	$33,873,907	33,315	$1,016,776	4.81%	**	$48,880	$179,903	$5.40	0.001%	0.011%
5415	Computer Systems Design and Related Services	500	$109,021,615	99,612	$1,094,463	6.41%	**	$70,105	$918,931	$9.23	0.001%	0.013%

Table V-32, contd.
Average Cost Impacts on Small Business Entities Affected by OSHA's Proposed Revision to Subparts D and I (per Entity, by 4-Digit NAICS Code)

NAICS	Industry	SBA Employment Size Criterion [a]	Estimated Receipts, 2006 ($1,000)[b]	Entities [c]	Average Receipts per Entity	Profit Rate [d]		Estimated Profits per Entity	Estimated Cost of the Proposed Rule	Average Cost per Entity	Ratio of Average Cost to Revenues	Ratio of Average Cost to Profits
5416	Management, Scientific, and Technical Consulting Services	100	$116,817,864	135,799	$860,226	5.96%	**	$51,294	$848,572	$6.25	0.001%	0.012%
5417	Scientific Research and Development Services	100	$16,619,186	12,136	$1,369,412	7.95%	**	$108,862	$151,180	$12.46	0.001%	0.011%
5418	Advertising and Related Services	500	$42,745,283	35,826	$1,193,136	8.66%	**	$103,374	$5,539,209	$154.61	0.013%	0.150%
5419	Other Professional, Scientific, and Technical Services	500	$46,378,040	64,641	$717,471	5.61%	**	$40,220	$379,287	$5.87	0.001%	0.015%
5511	Management of Companies and Enterprises	100	$14,653,568	11,297	$1,297,120	7.10%	**	$92,137	$103,314	$9.15	0.001%	0.010%
5611	Office Administrative Services	100	$21,925,853	23,645	$927,293	14.63%	*	$135,679	$167,414	$7.08	0.001%	0.005%
5612	Facilities Support Services	500	$3,877,864	1,461	$2,654,253	4.46%	*	$118,382	$40,177	$27.50	0.001%	0.023%

Table V-32, contd.
Average Cost Impacts on Small Business Entities Affected by OSHA's Proposed Revision to Subparts D and I (per Entity, by 4-Digit NAICS Code)

NAICS	Industry	SBA Employment Size Criterion [a]	Estimated Receipts, 2006 ($1,000)[b]	Entities [c]	Average Receipts per Entity	Profit Rate [d]		Estimated Profits per Entity	Estimated Cost of the Proposed Rule	Average Cost per Entity	Ratio of Average Cost to Revenues	Ratio of Average Cost to Profits
5613	Employment Services	100	$13,844,990	19,487	$710,473	4.46%	**	$31,688	$228,204	$11.71	0.002%	0.037%
5614	Business Support Services	100	$18,314,840	28,919	$633,315	2.65%	*	$16,770	$167,942	$5.81	0.001%	0.035%
5615	Travel Arrangement and Reservation Services	100	$11,342,569	17,100	$663,308	4.46%	**	$29,584	$88,099	$5.15	0.001%	0.017%
5616	Investigation and Security Services	100	$9,473,574	18,290	$517,965	3.73%	*	$19,339	$176,851	$9.67	0.002%	0.050%
5617	Services to Buildings and Dwellings	100	$84,494,650	167,989	$502,977	4.46%	*	$22,433	$70,582,840	$420.16	0.084%	1.873%
5619	Other Support Services	100	$19,053,604	18,548	$1,027,259	4.46%	*	$45,817	$126,868	$6.84	0.001%	0.015%
5621	Waste Collection	500	$11,910,526	7,107	$1,675,887	5.83%	*	$97,678	$84,606	$11.90	0.001%	0.012%
5622	Waste Treatment and Disposal	100	$2,168,577	1,448	$1,497,636	4.61%	*	$69,023	$20,638	$14.25	0.001%	0.021%
5629	Remediation and Other Waste Management Services	100	$7,368,741	7,317	$1,007,071	4.61%	*	$46,414	$150,812	$20.61	0.002%	0.044%

Table V-32, contd.
Average Cost Impacts on Small Business Entities Affected by OSHA's Proposed Revision to Subparts D and I (per Entity, by 4-Digit NAICS Code)

NAICS	Industry	SBA Employment Size Criterion [a]	Estimated Receipts, 2006 ($1,000)[b]	Entities [c]	Average Receipts per Entity	Profit Rate [d]		Estimated Profits per Entity	Estimated Cost of the Proposed Rule	Average Cost per Entity	Ratio of Average Cost to Revenues	Ratio of Average Cost to Profits
6111	Elementary and Secondary Schools	100	$13,045,206	16,071	$811,723	4.61%	**	$37,411	$57,759	$3.59	0.000%	0.010%
6112	Junior Colleges	500	$1,640,791	416	$3,944,210	8.06%	**	$317,766	$2,680	$6.44	0.000%	0.002%
6113	Colleges, Universities, and Professional Schools	100	$1,256,030	1,153	$1,089,358	8.06%	**	$87,764	$6,173	$5.35	0.000%	0.006%
6114	Business Schools and Computer and Management Training	100	$5,368,843	6,453	$831,992	8.06%	**	$67,030	$22,554	$3.50	0.000%	0.005%
6115	Technical and Trade Schools	500	$6,510,845	6,540	$995,542	8.06%	**	$80,206	$31,564	$4.83	0.000%	0.006%
6116	Other Schools and Instruction	100	$13,043,619	33,336	$391,277	8.06%	**	$31,523	$102,568	$3.08	0.001%	0.010%
6117	Educational Support Services	100	$4,730,609	5,912	$800,171	8.06%	**	$64,466	$21,496	$3.64	0.000%	0.006%
6211	Offices of Physicians	100	$237,249,455	188,192	$1,260,678	8.06%	*	$101,567	$708,463	$3.76	0.000%	0.004%
6212	Offices of Dentists	100	$282,300,729	119,272	$2,366,865	4.45%	*	$105,266	$404,309	$3.39	0.000%	0.003%

Table V-32, contd.
Average Cost Impacts on Small Business Entities Affected by OSHA's Proposed Revision to Subparts D and I (per Entity, by 4-Digit NAICS Code)

NAICS	Industry	SBA Employment Size Criterion [a]	Estimated Receipts, 2006 ($1,000)[b]	Entities [c]	Average Receipts per Entity	Profit Rate [d]		Estimated Profits per Entity	Estimated Cost of the Proposed Rule	Average Cost per Entity	Ratio of Average Cost to Revenues	Ratio of Average Cost to Profits
6213	Offices of Other Health Practitioners	100	$89,805,624	108,034	$831,272	7.34%	*	$61,022	$364,218	$3.37	0.000%	0.006%
6214	Outpatient Care Centers	500	$32,976,557	13,215	$2,495,388	8.13%	*	$202,861	$76,510	$5.79	0.000%	0.003%
6215	Medical and Diagnostic Laboratories	500	$18,878,829	7,614	$2,479,489	5.71%	*	$141,457	$36,150	$4.75	0.000%	0.003%
6216	Home Health Care Services	20	$3,269,216	8,985	$363,853	5.46%	*	$19,873	$37,189	$4.14	0.001%	0.021%
6219	Other Ambulatory Health Care Services	100	$4,491,648	5,283	$850,208	5.46%	*	$46,437	$28,224	$5.34	0.001%	0.012%
6221	General Medical and Surgical Hospitals	20	$771,204	140	$5,508,604	5.46%	**	$300,873	$739	$5.28	0.000%	0.002%
6222	Psychiatric and Substance Abuse Hospitals	20	$46,165	58	$795,944	5.38%	**	$42,831	$324	$5.58	0.001%	0.013%
6223	Specialty (except Psychiatric and Substance Abuse) Hospitals	20	$93,130	135	$689,853	5.38%	**	$37,122	$823	$6.10	0.001%	0.016%

Table V-32, contd.
Average Cost Impacts on Small Business Entities Affected by OSHA's Proposed Revision to Subparts D and I (per Entity, by 4-Digit NAICS Code)

NAICS	Industry	SBA Employment Size Criterion [a]	Estimated Receipts, 2006 ($1,000)[b]	Entities [c]	Average Receipts per Entity	Profit Rate [d]		Estimated Profits per Entity	Estimated Cost of the Proposed Rule	Average Cost per Entity	Ratio of Average Cost to Revenues	Ratio of Average Cost to Profits
6231	Nursing Care Facilities	500	$37,848,113	8,294	$4,563,312	5.38%	**	$245,561	$78,025	$9.41	0.000%	0.004%
6232	Residential Mental Retardation, Mental Health and Substance Abuse Facilities	100	$3,195,472	5,926	$539,229	5.38%	**	$29,017	$28,152	$4.75	0.001%	0.016%
6233	Community Care Facilities for the Elderly	100	$6,089,574	12,990	$468,789	5.38%	**	$25,227	$51,003	$3.93	0.001%	0.016%
6239	Other Residential Care Facilities	100	$1,586,306	3,054	$519,419	5.38%	**	$27,951	$14,162	$4.64	0.001%	0.017%
6241	Individual and Family Services	100	$18,371,166	36,613	$501,766	5.38%	**	$27,001	$104,948	$2.87	0.001%	0.011%
6242	Community Food and Housing, and Emergency and Other Relief Services	100	$7,966,235	8,773	$908,040	5.38%	**	$48,864	$33,017	$3.76	0.000%	0.008%
6243	Vocational Rehabilitation Services	100	$2,488,820	3,514	$708,258	5.38%	**	$38,113	$13,443	$3.83	0.001%	0.010%

Table V-32, contd.
Average Cost Impacts on Small Business Entities Affected by OSHA's Proposed Revision to Subparts D and I (per Entity, by 4-Digit NAICS Code)

NAICS	Industry	SBA Employment Size Criterion [a]	Estimated Receipts, 2006 ($1,000)[b]	Entities [c]	Average Receipts per Entity	Profit Rate [d]		Estimated Profits per Entity	Estimated Cost of the Proposed Rule	Average Cost per Entity	Ratio of Average Cost to Revenues	Ratio of Average Cost to Profits
6244	Child Day Care Services	100	$16,360,217	58,234	$280,939	5.38%	**	$15,118	$147,906	$2.54	0.001%	0.017%
7111	Performing Arts Companies	500	$10,447,810	9,019	$1,158,422	5.38%	*	$62,337	$51,142	$5.67	0.000%	0.009%
7112	Spectator Sports	100	$3,408,224	4,153	$820,666	9.76%	*	$80,083	$21,572	$5.19	0.001%	0.006%
7113	Promoters of Performing Arts, Sports, and Similar Events	20	$3,622,249	4,923	$735,781	9.76%	*	$71,799	$47,610	$9.67	0.001%	0.013%
7114	Agents and Managers for Artists, Athletes, Entertainers, and Other Public Figures	500	$3,683,130	3,436	$1,071,924	9.76%	*	$104,601	$13,648	$3.97	0.000%	0.004%
7115	Independent Artists, Writers, and Performers	500	$10,944,145	19,366	$565,122	9.76%	*	$55,146	$71,251	$3.68	0.001%	0.007%
7121	Museums, Historical Sites, and Similar Institutions	100	$5,187,827	6,324	$820,340	9.76%	**	$80,051	$28,451	$4.50	0.001%	0.006%

Table V-32, contd.
Average Cost Impacts on Small Business Entities Affected by OSHA's Proposed Revision to Subparts D and I (per Entity, by 4-Digit NAICS Code)

NAICS	Industry	SBA Employment Size Criterion [a]	Estimated Receipts, 2006 ($1,000)[b]	Entities [c]	Average Receipts per Entity	Profit Rate [d]		Estimated Profits per Entity	Estimated Cost of the Proposed Rule	Average Cost per Entity	Ratio of Average Cost to Revenues	Ratio of Average Cost to Profits
7131	Amusement Parks and Arcades	100	$1,325,416	2,271	$583,626	7.74%	*	$45,159	$11,982	$5.28	0.001%	0.012%
7132	Gambling Industries	500	$9,054,994	1,967	$4,603,454	6.33%	*	$291,371	$11,245	$5.72	0.000%	0.002%
7139	Other Amusement and Recreation Industries	100	$27,950,262	60,550	$461,606	6.33%	*	$29,217	$258,135	$4.26	0.001%	0.015%
7211	Traveler Accommodation	100	$25,942,047	41,352	$627,347	6.33%	*	$39,707	$320,676	$7.75	0.001%	0.020%
7212	RV (Recreational Vehicle) Parks and Recreational Camps	100	$5,683,763	6,534	$869,875	5.64%	*	$49,094	$35,819	$5.48	0.001%	0.011%
7213	Rooming and Boarding Houses	100	$1,853,516	2,150	$862,100	5.64%	*	$48,656	$9,654	$4.49	0.001%	0.009%
7221	Full-Service Restaurants	500	$122,123,529	184,085	$663,408	5.64%	*	$37,442	$745,451	$4.05	0.001%	0.011%
7222	Limited-Service Eating Places	100	$66,079,469	166,087	$397,861	4.98%	*	$19,803	$425,431	$2.56	0.001%	0.013%
7223	Special Food Services	100	$6,385,800	14,317	$446,029	4.98%	*	$22,200	$110,542	$7.72	0.002%	0.035%

Table V-32, contd.
Average Cost Impacts on Small Business Entities Affected by OSHA's Proposed Revision to Subparts D and I (per Entity, by 4-Digit NAICS Code)

NAICS	Industry	SBA Employment Size Criterion [a]	Estimated Receipts, 2006 ($1,000)[b]	Entities [c]	Average Receipts per Entity	Profit Rate [d]		Estimated Profits per Entity	Estimated Cost of the Proposed Rule	Average Cost per Entity	Ratio of Average Cost to Revenues	Ratio of Average Cost to Profits
7224	Drinking Places (Alcoholic Beverages)	100	$21,035,134	45,317	$464,178	4.98%	*	$23,103	$140,393	$3.10	0.001%	0.013%
8111	Automotive Repair and Maintenance	100	$160,322,321	150,385	$1,066,079	4.98%	*	$53,062	$2,545,088	$16.92	0.002%	0.032%
8112	Electronic and Precision Equipment Repair and Maintenance	20	$4,397,630	10,849	$405,349	3.68%	*	$14,933	$153,210	$14.12	0.003%	0.095%
8113	Commercial and Industrial Machinery and Equipment (except Automotive and Electronic) Repair and Maintenance	100	$20,781,375	22,686	$916,044	5.17%	*	$47,390	$452,947	$19.97	0.002%	0.042%
8114	Personal and Household Goods Repair and Maintenance	500	$7,218,017	22,293	$323,780	5.17%	*	$16,750	$238,573	$10.70	0.003%	0.064%

Table V-32, contd.
Average Cost Impacts on Small Business Entities Affected by OSHA's Proposed Revision to Subparts D and I (per Entity, by 4-Digit NAICS Code)

NAICS	Industry	SBA Employment Size Criterion [a]	Estimated Receipts, 2006 ($1,000)[b]	Entities [c]	Average Receipts per Entity	Profit Rate [d]		Estimated Profits per Entity	Estimated Cost of the Proposed Rule	Average Cost per Entity	Ratio of Average Cost to Revenues	Ratio of Average Cost to Profits
8121	Personal Care Services	100	$31,198,381	94,703	$329,434	5.17%	*	$17,043	$233,100	$2.46	0.001%	0.014%
8122	Death Care Services	20	$8,082,879	14,892	$542,767	5.67%	*	$30,794	$79,455	$5.34	0.001%	0.017%
8123	Dry-cleaning and Laundry Services	20	$7,114,322	32,044	$222,017	5.67%	*	$12,596	$157,751	$4.92	0.002%	0.039%
8129	Other Personal Services	20	$6,775,433	24,454	$277,069	5.67%	*	$15,720	$124,321	$5.08	0.002%	0.032%
8131	Religious Organizations	20	$37,868,483	156,829	$241,464	5.67%	*	$13,700	$800,794	$5.11	0.002%	0.037%
8132	Grantmaking and Giving Services	20	$22,193,695	12,660	$1,753,057	2.55%	*	$44,781	$54,804	$4.33	0.000%	0.010%
8133	Social Advocacy Organizations	20	$5,284,519	10,750	$491,583	2.55%	*	$12,557	$55,353	$5.15	0.001%	0.041%
8134	Civic and Social Organizations	20	$8,327,806	25,609	$325,191	2.55%	*	$8,307	$117,185	$4.58	0.001%	0.055%
8139	Business, Professional, Labor, Political, and Similar Organizations	20	$28,760,289	58,330	$493,062	2.55%	*	$12,595	$328,184	$5.63	0.001%	0.045%

[a] SBA criteria specified in dollar terms converted to size-class definition based on average revenues of different size establishments. Most restrictive criterion for 6-digit NAICS applied to the 4-digit NAICS level.

Table V-32, contd.
Average Cost Impacts on Small Business Entities Affected by OSHA's Proposed Revision to Subparts D and I (per Entity, by 4-Digit NAICS Code)

NAICS	Industry	SBA Employment Size Criterion [a]	Estimated Receipts, 2006 ($1,000)[b]	Entities [c]	Average Receipts per Entity	Profit Rate [d]	Estimated Profits per Entity	Estimated Cost of the Proposed Rule	Average Cost per Entity	Ratio of Average Cost to Revenues	Ratio of Average Cost to Profits

[b] Estimated based on 2002 receipts and payroll data from U.S. Census Bureau, *Statistics of U.S. Businesses*, 2002 and payroll data from U.S. Census Bureau, *Statistics of U.S. Businesses*, 2006. Receipts were not available for 2006 at disaggregated industry levels, but were estimated assuming the ratio of receipts to payroll remained unchanged between 2002 and 2006.
[c] U.S. Census Bureau, *Statistics of U.S. Businesses*, 2006
[d] Estimated from average of the yearly ratios of net income to total receipts as reported by the U.S. Internal Revenue Service, *Corporation Source Book, 2000 – 2006*. Data were not available at disaggregated levels for all industries; profit rates at more highly aggregated levels are used for such industries.
N/A: Data not available.
* Profit rate imputed from corresponding 3-digit NAICS industry.
** Profit rate imputed from corresponding 2-digit NAICS industry.
Source: U.S. Dept. of Labor, OSHA, Directorate of Evaluation and Analysis, Office of Regulatory Analysis, based on ERG, 2007.

Table V-33
Cost Impacts on Very Small Business Entities (fewer than 20 employees) Affected by OSHA's Proposed Revision to Subparts D and I (per Entity, by 4-Digit NAICS Code)

NAICS	Industry	Estimated Receipts, 2006 ($1,000)[a]	Entities [b]	Average Receipts per Entity	Profit Rate [c]		Estimated Profits per Entity	Estimated Cost of the Proposed Rule	Average Cost per Entity	Ratio of Average Cost to Revenues	Ratio of Average Cost to Profits
1131	Timber Tract Operations	$387,809	372	$1,042,497	4.36%	*	$45,497	$2,595	$6.98	0.001%	0.015%
1132	Forest Nurseries and Gathering of Forest Products	$80,513	149	$540,355	4.36%	*	$23,582	$1,204	$8.08	0.001%	0.034%
1133	Logging	$6,192,758	9,426	$656,987	4.36%	*	$28,672	$73,869	$7.84	0.001%	0.027%
1141	Fishing	$823,465	1,963	$419,493	5.93%	*	$24,896	$11,888	$6.06	0.001%	0.024%
1142	Hunting and Trapping	$87,850	331	$265,407	5.93%	*	$15,752	$2,020	$6.10	0.002%	0.039%
1153	Support Activities for Forestry	$605,251	1,462	$413,988	5.44%	*	$22,519	$9,327	$6.38	0.002%	0.028%
2111	Oil and Gas Extraction	$12,569,181	6,063	$2,073,096	14.88%		$308,504	$205,147	$33.84	0.002%	0.011%
2211	Electric Power Generation, Transmission and Distribution	$4,870,743	627	$7,768,331	4.44%		$344,881	$119,756	$191.00	0.002%	0.055%
2212	Natural Gas Distribution	$3,414,046	360	$9,483,461	2.98%		$282,516	$12,920	$35.89	0.000%	0.013%
2213	Water, Sewage and Other Systems	$2,033,096	4,202	$483,840	7.06%		$34,160	$1,780,069	$423.62	0.088%	1.240%
3111	Animal Food Manufacturing	$2,006,640	799	$2,511,440	4.24%		$106,596	$9,609	$12.03	0.000%	0.011%

Table V-33, contd.
Cost Impacts on Very Small Business Entities (fewer than 20 employees) Affected by OSHA's Proposed Revision to Subparts D and I (per Entity, by 4-Digit NAICS Code)

NAICS	Industry	Estimated Receipts, 2006 ($1,000)[a]	Entities [b]	Average Receipts per Entity	Profit Rate [c]		Estimated Profits per Entity	Estimated Cost of the Proposed Rule	Average Cost per Entity	Ratio of Average Cost to Revenues	Ratio of Average Cost to Profits
3112	Grain and Oilseed Milling	$888,353	249	$3,567,683	4.24%	*	$151,427	$3,731	$14.98	0.000%	0.010%
3113	Sugar and Confectionery Product Manufacturing	$843,164	1,204	$700,303	7.68%		$53,791	$12,231	$10.16	0.001%	0.019%
3114	Fruit and Vegetable Preserving and Specialty Food Manufacturing	$1,133,325	689	$1,644,885	7.01%		$115,328	$8,105	$11.76	0.001%	0.010%
3115	Dairy Product Manufacturing	$1,187,406	601	$1,975,717	2.66%		$52,485	$7,946	$13.22	0.001%	0.025%
3116	Animal Slaughtering and Processing	$3,438,617	2,223	$1,546,836	2.41%		$37,230	$22,257	$10.01	0.001%	0.027%
3117	Seafood Product Preparation and Packaging	$825,521	344	$2,399,770	2.41%	*	$57,760	$3,362	$9.77	0.000%	0.017%
3118	Bakeries and Tortilla Manufacturing	$3,212,501	7,422	$432,835	10.13%		$43,835	$67,820	$9.14	0.002%	0.021%
3119	Other Food Manufacturing	$2,703,041	1,684	$1,605,131	5.68%		$91,107	$18,756	$11.14	0.001%	0.012%
3121	Beverage Manufacturing	$2,270,554	2,330	$974,487	6.64%	*	$64,735	$25,781	$11.06	0.001%	0.017%
3122	Tobacco Manufacturing	$78,247	51	$1,534,247	14.49%		$222,342	$671	$13.16	0.001%	0.006%
3131	Fiber, Yarn, and Thread Mills	$180,902	182	$993,969	4.31%	*	$42,882	$2,027	$11.14	0.001%	0.026%

Table V-33, contd.
Cost Impacts on Very Small Business Entities (fewer than 20 employees) Affected by OSHA's Proposed Revision to Subparts D and I (per Entity, by 4-Digit NAICS Code)

NAICS	Industry	Estimated Receipts, 2006 ($1,000)[a]	Entities [b]	Average Receipts per Entity	Profit Rate [c]		Estimated Profits per Entity	Estimated Cost of the Proposed Rule	Average Cost per Entity	Ratio of Average Cost to Revenues	Ratio of Average Cost to Profits
3132	Fabric Mills	$656,662	720	$912,031	4.31%	*	$39,347	$7,391	$10.27	0.001%	0.026%
3133	Textile and Fabric Finishing and Fabric Coating Mills	$1,258,127	967	$1,301,062	4.31%	*	$56,130	$8,883	$9.19	0.001%	0.016%
3141	Textile Furnishings Mills	$1,736,097	2,024	$857,756	4.56%	*	$39,100	$17,052	$8.43	0.001%	0.022%
3149	Other Textile Product Mills	$1,709,878	3,275	$522,100	4.56%	*	$23,799	$25,664	$7.84	0.002%	0.033%
3151	Apparel Knitting Mills	$195,782	289	$677,446	3.16%		$21,420	$2,606	$9.02	0.001%	0.042%
3152	Cut and Sew Apparel Manufacturing	$3,767,588	7,536	$499,945	5.59%		$27,939	$50,792	$6.74	0.001%	0.024%
3159	Apparel Accessories and Other Apparel Manufacturing	$339,583	725	$468,390	4.66%		$21,824	$5,527	$7.62	0.002%	0.035%
3161	Leather and Hide Tanning and Finishing	$123,741	188	$658,199	6.10%	*	$40,126	$1,595	$8.48	0.001%	0.021%
3162	Footwear Manufacturing	$121,200	202	$600,000	6.10%	*	$36,578	$1,799	$8.91	0.001%	0.024%
3169	Other Leather and Allied Product Manufacturing	$336,146	673	$499,474	6.10%	*	$30,450	$4,899	$7.28	0.001%	0.024%
3211	Sawmills and Wood Preservation	$3,008,217	2,620	$1,148,174	4.08%	*	$46,843	$28,052	$10.71	0.001%	0.023%

Table V-33, contd.
Cost Impacts on Very Small Business Entities (fewer than 20 employees) Affected by OSHA's Proposed Revision to Subparts D and I (per Entity, by 4-Digit NAICS Code)

NAICS	Industry	Estimated Receipts, 2006 ($1,000)[a]	Entities [b]	Average Receipts per Entity	Profit Rate [c]		Estimated Profits per Entity	Estimated Cost of the Proposed Rule	Average Cost per Entity	Ratio of Average Cost to Revenues	Ratio of Average Cost to Profits
3212	Veneer, Plywood, and Engineered Wood Product Manufacturing	$860,217	710	$1,211,573	4.08%	*	$49,430	$8,531	$12.02	0.001%	0.024%
3219	Other Wood Product Manufacturing	$5,466,331	6,911	$790,961	4.08%	*	$32,270	$66,672	$9.65	0.001%	0.030%
3221	Pulp, Paper, and Paperboard Mills	$206,617	86	$2,402,528	3.18%		$76,401	$2,025	$23.55	0.001%	0.031%
3222	Converted Paper Product Manufacturing	$2,527,384	1,412	$1,789,932	8.01%		$143,414	$26,423	$18.71	0.001%	0.013%
3231	Printing and Related Support Activities	$14,244,301	26,463	$538,272	4.37%	*	$23,533	$257,696	$9.74	0.002%	0.041%
3241	Petroleum and Coal Products Manufacturing	$2,167,046	689	$3,145,204	7.50%	*	$235,928	$21,831	$31.69	0.001%	0.013%
3251	Basic Chemical Manufacturing	$2,192,053	682	$3,214,155	4.58%		$147,210	$18,700	$27.42	0.001%	0.019%
3252	Resin, Synthetic Rubber, and Artificial Synthetic Fibers and Filaments Manufacturing	$797,842	340	$2,346,595	8.53%		$200,167	$9,323	$27.42	0.001%	0.014%

Table V-33, contd.
Cost Impacts on Very Small Business Entities (fewer than 20 employees) Affected by OSHA's Proposed Revision to Subparts D and I (per Entity, by 4-Digit NAICS Code)

NAICS	Industry	Estimated Receipts, 2006 ($1,000)[a]	Entities [b]	Average Receipts per Entity	Profit Rate [c]		Estimated Profits per Entity	Estimated Cost of the Proposed Rule	Average Cost per Entity	Ratio of Average Cost to Revenues	Ratio of Average Cost to Profits
3253	Pesticide, Fertilizer, and Other Agricultural Chemical Manufacturing	$1,060,950	449	$2,362,918	11.10%	*	$262,168	$11,101	$24.72	0.001%	0.009%
3254	Pharmaceutical and Medicine Manufacturing	$1,671,309	828	$2,018,489	16.64%		$335,797	$13,829	$16.70	0.001%	0.005%
3255	Paint, Coating, and Adhesive Manufacturing	$1,668,102	989	$1,686,655	5.38%		$90,816	$14,755	$14.92	0.001%	0.016%
3256	Soap, Cleaning Compound, and Toilet Preparation Manufacturing	$3,031,221	1,417	$2,139,182	9.21%		$196,922	$21,579	$15.23	0.001%	0.008%
3259	Other Chemical Product and Preparation Manufacturing	$2,120,935	1,402	$1,512,793	4.51%		$68,164	$23,326	$16.64	0.001%	0.024%
3261	Plastics Product Manufacturing	$6,241,338	5,216	$1,196,576	4.42%		$52,850	$58,645	$11.24	0.001%	0.021%
3262	Rubber Product Manufacturing	$897,778	968	$927,457	2.59%		$24,013	$11,449	$11.83	0.001%	0.049%
3271	Clay Product and Refractory Manufacturing	$479,460	1,008	$475,655	4.41%		$21,000	$13,103	$13.00	0.003%	0.062%

Table V-33, contd.
Cost Impacts on Very Small Business Entities (fewer than 20 employees) Affected by OSHA's Proposed Revision to Subparts D and I (per Entity, by 4-Digit NAICS Code)

NAICS	Industry	Estimated Receipts, 2006 ($1,000)[a]	Entities [b]	Average Receipts per Entity	Profit Rate [c]		Estimated Profits per Entity	Estimated Cost of the Proposed Rule	Average Cost per Entity	Ratio of Average Cost to Revenues	Ratio of Average Cost to Profits
3272	Glass and Glass Product Manufacturing	$788,025	1,376	$572,692	3.42%		$19,591	$19,467	$14.15	0.002%	0.072%
3273	Cement and Concrete Product Manufacturing	$4,171,545	3,214	$1,297,929	6.64%		$86,158	$58,861	$18.31	0.001%	0.021%
3274	Lime and Gypsum Product Manufacturing	$224,556	163	$1,377,646	6.64%	*	$91,449	$2,910	$17.85	0.001%	0.020%
3279	Other Nonmetallic Mineral Product Manufacturing	$1,809,989	2,074	$872,705	5.49%	*	$47,903	$31,873	$15.37	0.002%	0.032%
3311	Iron and Steel Mills and Ferroalloy Manufacturing	$1,127,635	473	$2,384,007	4.49%		$107,089	$8,533	$18.04	0.001%	0.017%
3312	Steel Product Manufacturing from Purchased Steel	$354,222	272	$1,302,285	4.49%	*	$58,499	$4,550	$16.73	0.001%	0.029%
3313	Alumina and Aluminum Production and Processing	$395,465	209	$1,892,177	4.46%		$84,484	$3,805	$18.20	0.001%	0.022%
3314	Nonferrous Metal (except Aluminum) Production and Processing	$654,593	431	$1,518,778	4.42%	*	$67,054	$7,630	$17.70	0.001%	0.026%
3315	Foundries	$831,986	992	$838,695	4.11%		$34,502	$12,919	$13.02	0.002%	0.038%

Table V-33, contd.
Cost Impacts on Very Small Business Entities (fewer than 20 employees) Affected by OSHA's Proposed Revision to Subparts D and I (per Entity, by 4-Digit NAICS Code)

NAICS	Industry	Estimated Receipts, 2006 ($1,000)[a]	Entities [b]	Average Receipts per Entity	Profit Rate [c]		Estimated Profits per Entity	Estimated Cost of the Proposed Rule	Average Cost per Entity	Ratio of Average Cost to Revenues	Ratio of Average Cost to Profits
3321	Forging and Stamping	$1,450,984	1,265	$1,147,023	4.71%		$53,968	$16,960	$13.41	0.001%	0.025%
3322	Cutlery and Handtool Manufacturing	$755,903	973	$776,879	5.22%		$40,581	$11,110	$11.42	0.001%	0.028%
3323	Architectural and Structural Metals Manufacturing	$7,826,903	8,656	$904,217	4.70%		$42,533	$97,148	$11.22	0.001%	0.026%
3324	Boiler, Tank, and Shipping Container Manufacturing	$891,879	638	$1,397,929	3.58%		$50,096	$8,440	$13.23	0.001%	0.026%
3325	Hardware Manufacturing	$442,351	438	$1,009,933	5.22%	*	$52,755	$5,201	$11.87	0.001%	0.023%
3326	Spring and Wire Product Manufacturing	$850,387	923	$921,330	5.22%	*	$48,127	$10,891	$11.80	0.001%	0.025%
3327	Machine Shops; Turned Product; and Screw, Nut, and Bolt Manufacturing	$11,888,606	19,544	$608,300	5.80%	*	$35,270	$213,298	$10.91	0.002%	0.031%
3328	Coating, Engraving, Heat Treating, and Allied Activities	$2,462,950	3,871	$636,257	4.85%		$30,888	$42,106	$10.88	0.002%	0.035%
3329	Other Fabricated Metal Product Manufacturing	$3,622,775	3,893	$930,587	6.81%		$63,344	$46,487	$11.94	0.001%	0.019%

Table V-33, contd.
Cost Impacts on Very Small Business Entities (fewer than 20 employees) Affected by OSHA's Proposed Revision to Subparts D and I (per Entity, by 4-Digit NAICS Code)

NAICS	Industry	Estimated Receipts, 2006 ($1,000)[a]	Entities [b]	Average Receipts per Entity	Profit Rate [c]	Estimated Profits per Entity	Estimated Cost of the Proposed Rule	Average Cost per Entity	Ratio of Average Cost to Revenues	Ratio of Average Cost to Profits
3331	Agriculture, Construction, and Mining Machinery Manufacturing	$2,277,178	1,634	$1,393,622	5.10%	$71,064	$20,381	$12.47	0.001%	0.018%
3332	Industrial Machinery Manufacturing	$2,532,204	2,414	$1,048,966	5.80%	$60,827	$30,083	$12.46	0.001%	0.020%
3333	Commercial and Service Industry Machinery Manufacturing	$1,452,641	1,403	$1,035,382	4.86%	$50,304	$17,565	$12.52	0.001%	0.025%
3334	Ventilation, Heating, Air-Conditioning, and Commercial Refrigeration Equipment Manufacturing	$1,024,923	826	$1,240,826	4.55%	$56,494	$10,543	$12.76	0.001%	0.023%
3335	Metalworking Machinery Manufacturing	$4,107,437	5,799	$708,301	5.29%	$37,464	$72,668	$12.53	0.002%	0.033%
3336	Engine, Turbine, and Power Transmission Equipment Manufacturing	$584,004	407	$1,434,900	2.63%	$37,694	$6,098	$14.98	0.001%	0.040%
3339	Other General Purpose Machinery Manufacturing	$4,054,596	3,516	$1,153,184	4.58%	$52,774	$45,436	$12.92	0.001%	0.024%

Table V-33, contd.
Cost Impacts on Very Small Business Entities (fewer than 20 employees) Affected by OSHA's Proposed Revision to Subparts D and I (per Entity, by 4-Digit NAICS Code)

NAICS	Industry	Estimated Receipts, 2006 ($1,000)[a]	Entities [b]	Average Receipts per Entity	Profit Rate [c]		Estimated Profits per Entity	Estimated Cost of the Proposed Rule	Average Cost per Entity	Ratio of Average Cost to Revenues	Ratio of Average Cost to Profits
3341	Computer and Peripheral Equipment Manufacturing	$1,132,789	841	$1,346,955	9.05%		$121,852	$9,054	$10.77	0.001%	0.009%
3342	Communications Equipment Manufacturing	$1,195,330	973	$1,228,500	4.57%		$56,177	$12,936	$13.29	0.001%	0.024%
3343	Audio and Video Equipment Manufacturing	$420,605	369	$1,139,851	4.52%		$51,535	$3,966	$10.75	0.001%	0.021%
3344	Semiconductor and Other Electronic Component Manufacturing	$4,475,225	2,333	$1,918,228	6.60%		$126,699	$29,862	$12.80	0.001%	0.010%
3345	Navigational, Measuring, Electromedical, and Control Instruments Manufacturing	$3,210,871	2,962	$1,084,021	5.94%		$64,418	$38,645	$13.05	0.001%	0.020%
3346	Manufacturing and Reproducing Magnetic and Optical Media	$563,452	614	$917,675	4.52%	*	$41,490	$6,142	$10.00	0.001%	0.024%
3351	Electric Lighting Equipment Manufacturing	$762,790	704	$1,083,508	4.21%		$45,650	$7,793	$11.07	0.001%	0.024%
3352	Household Appliance Manufacturing	$475,225	189	$2,514,418	4.21%		$105,937	$2,095	$11.09	0.000%	0.010%

Table V-33, contd.
Cost Impacts on Very Small Business Entities (fewer than 20 employees) Affected by OSHA's Proposed Revision to Subparts D and I (per Entity, by 4-Digit NAICS Code)

NAICS	Industry	Estimated Receipts, 2006 ($1,000)[a]	Entities [b]	Average Receipts per Entity	Profit Rate [c]		Estimated Profits per Entity	Estimated Cost of the Proposed Rule	Average Cost per Entity	Ratio of Average Cost to Revenues	Ratio of Average Cost to Profits
3353	Electrical Equipment Manufacturing	$1,599,800	1,309	$1,222,154	7.15%		$87,360	$15,885	$12.14	0.001%	0.014%
3359	Other Electrical Equipment and Component Manufacturing	$1,428,517	1,035	$1,380,209	5.41%		$74,701	$13,130	$12.69	0.001%	0.017%
3361	Motor Vehicle Manufacturing	$602,458	181	$3,328,498	4.87%		$161,971	$3,023	$16.70	0.001%	0.010%
3362	Motor Vehicle Body and Trailer Manufacturing	$1,171,697	1,042	$1,124,469	2.04%	*	$22,944	$12,495	$11.99	0.001%	0.052%
3363	Motor Vehicle Parts Manufacturing	$3,196,010	2,540	$1,258,272	2.04%	*	$25,675	$34,147	$13.44	0.001%	0.052%
3364	Aerospace Product and Parts Manufacturing	$805,446	730	$1,103,351	2.04%		$22,514	$11,791	$16.15	0.001%	0.072%
3365	Railroad Rolling Stock Manufacturing	$124,475	75	$1,659,673	4.16%	*	$69,084	$1,112	$14.83	0.001%	0.021%
3366	Ship and Boat Building	$1,004,262	1,152	$871,756	2.72%		$23,736	$28,093	$24.39	0.003%	0.103%
3369	Other Transportation Equipment Manufacturing	$623,309	738	$844,592	5.86%		$49,508	$7,939	$10.76	0.001%	0.022%

Table V-33, contd.
Cost Impacts on Very Small Business Entities (fewer than 20 employees) Affected by OSHA's Proposed Revision to Subparts D and I (per Entity, by 4-Digit NAICS Code)

NAICS	Industry	Estimated Receipts, 2006 ($1,000)[a]	Entities [b]	Average Receipts per Entity	Profit Rate [c]		Estimated Profits per Entity	Estimated Cost of the Proposed Rule	Average Cost per Entity	Ratio of Average Cost to Revenues	Ratio of Average Cost to Profits
3371	Household and Institutional Furniture and Kitchen Cabinet Manufacturing	$6,772,307	13,501	$501,615	6.31%	*	$31,648	$114,535	$8.48	0.002%	0.027%
3372	Office Furniture (including Fixtures) Manufacturing	$2,004,309	2,534	$790,967	4.54%	*	$35,935	$26,031	$10.27	0.001%	0.029%
3379	Other Furniture Related Product Manufacturing	$512,019	592	$864,897	4.54%	*	$39,293	$5,853	$9.89	0.001%	0.025%
3391	Medical Equipment and Supplies Manufacturing	$4,659,876	9,659	$482,439	4.54%		$21,918	$100,007	$10.35	0.002%	0.047%
3399	Other Miscellaneous Manufacturing	$9,815,716	14,922	$657,802	10.77%		$70,839	$144,769	$9.70	0.001%	0.014%
4231	Motor Vehicle and Motor Vehicle Parts and Supplies Merchant Wholesalers	$33,796,942	14,546	$2,323,453	5.80%		$134,657	$222,517	$15.30	0.001%	0.011%
4232	Furniture and Home Furnishing Merchant Wholesalers	$23,149,126	9,117	$2,539,117	2.76%	*	$70,025	$99,629	$10.93	0.000%	0.016%
4233	Lumber and Other Construction Materials Merchant Wholesalers	$31,719,378	10,007	$3,169,719	2.90%		$92,050	$156,423	$15.63	0.000%	0.017%

Table V-33, contd.
Cost Impacts on Very Small Business Entities (fewer than 20 employees) Affected by OSHA's Proposed Revision to Subparts D and I (per Entity, by 4-Digit NAICS Code)

NAICS	Industry	Estimated Receipts, 2006 ($1,000)[a]	Entities [b]	Average Receipts per Entity	Profit Rate [c]	Estimated Profits per Entity	Estimated Cost of the Proposed Rule	Average Cost per Entity	Ratio of Average Cost to Revenues	Ratio of Average Cost to Profits
4234	Professional and Commercial Equipment and Supplies Merchant Wholesalers	$41,082,278	22,418	$1,832,558	3.04%	$55,739	$367,033	$16.37	0.001%	0.029%
4235	Metal and Mineral (except Petroleum) Merchant Wholesalers	$29,709,743	5,765	$5,153,468	2.78%	$143,354	$77,794	$13.49	0.000%	0.009%
4236	Electrical and Electronic Goods Merchant Wholesalers	$56,255,928	16,322	$3,446,632	2.69%	$92,684	$275,683	$16.89	0.000%	0.018%
4237	Hardware, and Plumbing and Heating Equipment and Supplies Merchant Wholesalers	$23,328,205	8,931	$2,612,048	2.28%	$59,475	$154,242	$17.27	0.001%	0.029%
4238	Machinery, Equipment, and Supplies Merchant Wholesalers	$79,350,790	35,906	$2,209,959	2.99%	$66,078	$681,589	$18.98	0.001%	0.029%
4239	Miscellaneous Durable Goods Merchant Wholesalers	$59,619,001	27,590	$2,160,892	3.44%	$74,240	$351,677	$12.75	0.001%	0.017%
4241	Paper and Paper Product Merchant Wholesalers	$17,913,702	7,732	$2,316,826	2.90%	$67,282	$81,321	$10.52	0.000%	0.016%

Table V-33, contd.
Cost Impacts on Very Small Business Entities (fewer than 20 employees) Affected by OSHA's Proposed Revision to Subparts D and I (per Entity, by 4-Digit NAICS Code)

NAICS	Industry	Estimated Receipts, 2006 ($1,000)[a]	Entities [b]	Average Receipts per Entity	Profit Rate [c]		Estimated Profits per Entity	Estimated Cost of the Proposed Rule	Average Cost per Entity	Ratio of Average Cost to Revenues	Ratio of Average Cost to Profits
4242	Drugs and Druggists' Sundries Merchant Wholesalers	$14,645,451	5,112	$2,864,916	2.12%		$60,879	$46,063	$9.01	0.000%	0.015%
4243	Apparel, Piece Goods, and Notions Merchant Wholesalers	$29,052,068	12,590	$2,307,551	3.46%		$79,734	$100,090	$7.95	0.000%	0.010%
4244	Grocery and Related Product Wholesalers	$82,094,767	22,264	$3,687,332	4.79%		$176,774	$247,689	$11.13	0.000%	0.006%
4245	Farm Product Raw Material Merchant Wholesalers	$23,766,585	3,217	$7,387,810	2.59%		$191,509	$35,334	$10.98	0.000%	0.006%
4246	Chemical and Allied Products Merchant Wholesalers	$20,697,064	7,069	$2,927,863	2.28%		$66,751	$106,772	$15.10	0.001%	0.023%
4247	Petroleum and Petroleum Products Merchant Wholesalers	$29,492,323	3,505	$8,414,357	3.16%		$266,252	$67,443	$19.24	0.000%	0.007%
4248	Beer, Wine, and Distilled Alcoholic Beverage Merchant Wholesalers	$5,412,757	2,010	$2,692,914	2.00%		$53,773	$21,111	$10.50	0.000%	0.020%
4249	Miscellaneous Nondurable Goods Merchant Wholesalers	$41,576,666	22,457	$1,851,390	3.92%		$72,536	$198,711	$8.85	0.000%	0.012%

Table V-33, contd.
Cost Impacts on Very Small Business Entities (fewer than 20 employees) Affected by OSHA's Proposed Revision to Subparts D and I (per Entity, by 4-Digit NAICS Code)

NAICS	Industry	Estimated Receipts, 2006 ($1,000)[a]	Entities [b]	Average Receipts per Entity	Profit Rate [c]		Estimated Profits per Entity	Estimated Cost of the Proposed Rule	Average Cost per Entity	Ratio of Average Cost to Revenues	Ratio of Average Cost to Profits
4251	Wholesale Electronic Markets and Agents and Brokers	$104,389,486	50,014	$2,087,205	3.18%	*	$66,431	$545,447	$10.91	0.001%	0.016%
4411	Automobile Dealers	$76,660,409	32,728	$2,342,349	7.14%		$167,239	$502,832	$15.36	0.001%	0.009%
4412	Other Motor Vehicle Dealers	$23,808,475	13,140	$1,811,908	1.18%	**	$21,401	$199,925	$15.21	0.001%	0.071%
4413	Automotive Parts, Accessories, and Tire Stores	$22,705,955	31,293	$725,592	2.78%	*	$20,149	$473,574	$15.13	0.002%	0.075%
4421	Furniture Stores	$16,518,056	18,894	$874,249	1.45%	*	$12,642	$159,017	$8.42	0.001%	0.067%
4422	Home Furnishings Stores	$18,788,457	25,517	$736,311	3.63%	*	$26,750	$263,974	$10.35	0.001%	0.039%
4431	Electronics and Appliance Stores	$20,267,091	29,639	$683,798	3.63%	*	$24,843	$342,454	$11.55	0.002%	0.047%
4441	Building Material and Supplies Dealers	$43,376,582	39,068	$1,110,284	3.52%	*	$39,082	$427,359	$10.94	0.001%	0.028%
4442	Lawn and Garden Equipment and Supplies Stores	$14,399,020	15,134	$951,435	7.87%	**	$74,868	$155,758	$10.29	0.001%	0.014%
4451	Grocery Stores	$41,273,462	58,462	$705,988	2.20%	*	$15,561	$315,104	$5.39	0.001%	0.035%
4452	Specialty Food Stores	$11,574,924	21,668	$534,194	2.07%	*	$11,038	$113,749	$5.25	0.001%	0.048%
4453	Beer, Wine, and Liquor Stores	$21,622,593	25,919	$834,237	2.07%	*	$17,238	$114,713	$4.43	0.001%	0.026%
4461	Health and Personal Care Stores	$49,201,213	40,170	$1,224,825	2.34%	*	$28,695	$278,028	$6.92	0.001%	0.024%
4471	Gasoline Stations	$84,812,096	62,033	$1,367,209	2.94%	*	$40,137	$520,213	$8.39	0.001%	0.021%

Table V-33, contd.
Cost Impacts on Very Small Business Entities (fewer than 20 employees) Affected by OSHA's Proposed Revision to Subparts D and I (per Entity, by 4-Digit NAICS Code)

NAICS	Industry	Estimated Receipts, 2006 ($1,000)[a]	Entities [b]	Average Receipts per Entity	Profit Rate [c]		Estimated Profits per Entity	Estimated Cost of the Proposed Rule	Average Cost per Entity	Ratio of Average Cost to Revenues	Ratio of Average Cost to Profits
4481	Clothing Stores	$18,232,600	38,587	$472,506	1.01%	*	$4,783	$265,485	$6.88	0.001%	0.144%
4482	Shoe Stores	$3,633,483	6,189	$587,087	5.53%	*	$32,491	$39,276	$6.35	0.001%	0.020%
4483	Jewelry, Luggage, and Leather Goods Stores	$12,044,959	18,976	$634,747	5.53%	*	$35,129	$148,761	$7.84	0.001%	0.022%
4511	Sporting Goods, Hobby, and Musical Instrument Stores	$15,827,965	29,986	$527,845	5.53%	*	$29,213	$277,337	$9.25	0.002%	0.032%
4512	Book, Periodical, and Music Stores	$3,566,592	8,788	$405,848	3.00%	*	$12,170	$50,453	$5.74	0.001%	0.047%
4521	Department Stores	$578,257	285	$2,028,973	3.00%	*	$60,841	$2,121	$7.44	0.000%	0.012%
4529	Other General Merchandise Stores	$4,474,218	9,608	$465,676	4.26%	*	$19,820	$83,477	$8.69	0.002%	0.044%
4531	Florists	$5,024,928	18,784	$267,511	4.26%	*	$11,385	$70,314	$3.74	0.001%	0.033%
4532	Office Supplies, Stationery, and Gift Stores	$10,424,882	27,832	$374,565	3.60%	*	$13,471	$228,837	$8.22	0.002%	0.061%
4533	Used Merchandise Stores	$4,445,806	12,195	$364,560	3.60%	*	$13,111	$68,308	$5.60	0.002%	0.043%
4539	Other Miscellaneous Store Retailers	$25,004,525	35,275	$708,846	3.60%	*	$25,493	$339,229	$9.62	0.001%	0.038%
4541	Electronic Shopping and Mail-Order Houses	$13,741,769	13,418	$1,024,129	3.60%	*	$36,833	$85,564	$6.38	0.001%	0.017%
4542	Vending Machine Operators	$2,080,676	4,261	$488,307	4.05%	*	$19,771	$47,978	$11.26	0.002%	0.057%

Table V-33, contd.
Cost Impacts on Very Small Business Entities (fewer than 20 employees) Affected by OSHA's Proposed Revision to Subparts D and I (per Entity, by 4-Digit NAICS Code)

NAICS	Industry	Estimated Receipts, 2006 ($1,000)[a]	Entities [b]	Average Receipts per Entity	Profit Rate [c]		Estimated Profits per Entity	Estimated Cost of the Proposed Rule	Average Cost per Entity	Ratio of Average Cost to Revenues	Ratio of Average Cost to Profits
4543	Direct Selling Establishments	$17,714,226	19,468	$909,915	4.05%	*	$36,841	$222,184	$11.41	0.001%	0.031%
4811	Scheduled Air Transportation	$653,135	341	$1,915,351	4.05%	*	$77,550	$12,632	$37.04	0.002%	0.048%
4812	Nonscheduled Air Transportation	$1,907,100	1,945	$980,514	2.98%	*	$29,207	$36,355	$18.69	0.002%	0.064%
4831	Deep Sea, Coastal, and Great Lakes Water Transportation	$1,199,484	627	$1,913,053	2.98%	*	$56,985	$10,881	$17.35	0.001%	0.030%
4832	Inland Water Transportation	$471,751	445	$1,060,115	6.58%	*	$69,774	$6,121	$13.76	0.001%	0.020%
4841	General Freight Trucking	$25,520,469	51,793	$492,740	6.58%	*	$32,431	$524,242	$10.12	0.002%	0.031%
4842	Specialized Freight Trucking	$22,861,046	44,397	$514,923	2.80%	*	$14,420	$409,786	$9.23	0.002%	0.064%
4851	Urban Transit Systems	$130,604	410	$318,546	2.80%	*	$8,921	$4,312	$10.52	0.003%	0.118%
4852	Interurban and Rural Bus Transportation	$74,916	158	$474,151	2.52%	*	$11,945	$1,977	$12.52	0.003%	0.105%
4853	Taxi and Limousine Service	$1,975,353	6,242	$316,462	2.52%	*	$7,973	$37,196	$5.96	0.002%	0.075%
4854	School and Employee Bus Transportation	$460,377	2,065	$222,943	2.52%	*	$5,617	$18,468	$8.94	0.004%	0.159%
4855	Charter Bus Industry	$359,540	749	$480,027	2.52%	*	$12,094	$6,028	$8.05	0.002%	0.067%
4859	Other Transit and Ground Passenger Transportation	$697,837	2,321	$300,662	2.52%	*	$7,575	$15,671	$6.75	0.002%	0.089%

Table V-33, contd.
Cost Impacts on Very Small Business Entities (fewer than 20 employees) Affected by OSHA's Proposed Revision to Subparts D and I (per Entity, by 4-Digit NAICS Code)

NAICS	Industry	Estimated Receipts, 2006 ($1,000)[a]	Entities [b]	Average Receipts per Entity	Profit Rate [c]		Estimated Profits per Entity	Estimated Cost of the Proposed Rule	Average Cost per Entity	Ratio of Average Cost to Revenues	Ratio of Average Cost to Profits
4861	Pipeline Transportation of Crude Oil	$180,343	23	$7,841,011	2.52%	*	$197,542	$0	$0.00	0.000%	0.000%
4862	Pipeline Transportation of Natural Gas	$550,767	65	$8,473,335	14.28%	*	$1,209,754	$1,505	$23.15	0.000%	0.002%
4869	Other Pipeline Transportation	$36,978	38	$973,115	14.28%	*	$138,934	$0	$0.00	0.000%	0.000%
4871	Scenic and Sightseeing Transportation, Land	$265,948	520	$511,438	14.28%	*	$73,019	$3,222	$6.20	0.001%	0.008%
4872	Scenic and Sightseeing Transportation, Water	$592,466	1,701	$348,304	5.04%	*	$17,557	$11,798	$6.94	0.002%	0.040%
4879	Scenic and Sightseeing Transportation, Other	$169,014	154	$1,097,495	5.04%	*	$55,320	$1,676	$10.88	0.001%	0.020%
4881	Support Activities for Air Transportation	$2,175,890	3,193	$681,456	5.04%	**	$34,350	$45,933	$14.39	0.002%	0.042%
4882	Support Activities for Rail Transportation	$360,644	330	$1,092,860	3.61%	**	$39,447	$5,255	$15.92	0.001%	0.040%
4883	Support Activities for Water Transportation	$1,045,561	1,423	$734,759	3.61%	**	$26,521	$21,772	$15.30	0.002%	0.058%
4884	Support Activities for Road Transportation	$3,128,899	8,160	$383,444	3.61%	**	$13,840	$81,485	$9.99	0.003%	0.072%

Table V-33, contd.
Cost Impacts on Very Small Business Entities (fewer than 20 employees) Affected by OSHA's Proposed Revision to Subparts D and I (per Entity, by 4-Digit NAICS Code)

NAICS	Industry	Estimated Receipts, 2006 ($1,000)[a]	Entities [b]	Average Receipts per Entity	Profit Rate [c]		Estimated Profits per Entity	Estimated Cost of the Proposed Rule	Average Cost per Entity	Ratio of Average Cost to Revenues	Ratio of Average Cost to Profits
4885	Freight Transportation Arrangement	$10,671,342	11,478	$929,721	3.61%	**	$33,558	$89,318	$7.78	0.001%	0.023%
4889	Other Support Activities for Transportation	$601,593	1,335	$450,632	3.61%	**	$16,266	$11,885	$8.90	0.002%	0.055%
4921	Couriers	$1,494,770	3,123	$478,633	3.61%	**	$17,276	$46,125	$14.77	0.003%	0.085%
4922	Local Messengers and Local Delivery	$1,517,013	4,097	$370,274	3.61%	**	$13,365	$29,613	$7.23	0.002%	0.054%
4931	Warehousing and Storage	$3,055,820	3,739	$817,283	3.61%	*	$29,500	$49,540	$13.25	0.002%	0.045%
5111	Newspaper, Periodical, Book, and Directory Publishers	$8,260,517	13,904	$594,111	5.03%	*	$29,866	$90,899	$6.54	0.001%	0.022%
5112	Software Publishers	$3,993,639	4,545	$878,688	12.58%	*	$110,516	$38,565	$8.49	0.001%	0.008%
5121	Motion Picture and Video Industries	$10,792,250	15,602	$691,722	17.36%	**	$120,081	$92,048	$5.90	0.001%	0.005%
5122	Sound Recording Industries	$1,534,574	3,172	$483,788	6.35%	**	$30,727	$26,785	$8.44	0.002%	0.027%
5151	Radio and Television Broadcasting	$1,953,574	3,564	$548,141	8.41%	*	$46,085	$45,001	$12.63	0.002%	0.027%
5152	Cable and Other Subscription Programming	$340,677	298	$1,143,210	7.05%	*	$80,543	$13,774	$46.22	0.004%	0.057%
5161	Internet Publishing and Broadcasting	$2,334,733	2,086	$1,119,239	7.05%	*	$78,854	$18,897	$9.06	0.001%	0.011%

Table V-33, contd.
Cost Impacts on Very Small Business Entities (fewer than 20 employees) Affected by OSHA's Proposed Revision to Subparts D and I (per Entity, by 4-Digit NAICS Code)

NAICS	Industry	Estimated Receipts, 2006 ($1,000)[a]	Entities [b]	Average Receipts per Entity	Profit Rate [c]		Estimated Profits per Entity	Estimated Cost of the Proposed Rule	Average Cost per Entity	Ratio of Average Cost to Revenues	Ratio of Average Cost to Profits
5171	Wired Telecommunications Carriers	$2,668,487	1,828	$1,459,785	7.40%	*	$108,001	$96,989	$53.06	0.004%	0.049%
5172	Wireless Telecommunications Carriers (except Satellite)	$1,851,991	2,209	$838,384	6.69%	*	$56,059	$59,605	$26.98	0.003%	0.048%
5173	Telecommunications Resellers	$2,053,531	1,956	$1,049,862	6.69%	*	$70,200	$20,251	$10.35	0.001%	0.015%
5174	Satellite Telecommunications	$493,742	349	$1,414,733	6.69%	*	$94,597	$16,360	$46.88	0.003%	0.050%
5175	Cable and Other Program Distribution	$900,917	938	$960,466	6.69%	*	$64,222	$11,195	$11.93	0.001%	0.019%
5179	Other Telecommunications	$402,683	375	$1,073,822	6.69%	*	$71,802	$7,398	$19.73	0.002%	0.027%
5181	Internet Service Providers and Web Search Portals	$2,569,384	4,407	$583,023	6.69%	*	$38,984	$25,253	$5.73	0.001%	0.015%
5182	Data Processing, Hosting, and Related Services	$3,826,822	5,747	$665,882	7.45%	*	$49,578	$38,357	$6.67	0.001%	0.013%
5191	Other Information Services	$977,138	2,858	$341,896	7.45%	*	$25,456	$23,997	$8.40	0.002%	0.033%
5211	Monetary Authorities - Central Bank	$172,607	41	$4,209,924	8.94%	*	$376,384	$134	$3.27	0.000%	0.001%

Table V-33, contd.
Cost Impacts on Very Small Business Entities (fewer than 20 employees) Affected by OSHA's Proposed Revision to Subparts D and I (per Entity, by 4-Digit NAICS Code)

NAICS	Industry	Estimated Receipts, 2006 ($1,000)[a]	Entities [b]	Average Receipts per Entity	Profit Rate [c]		Estimated Profits per Entity	Estimated Cost of the Proposed Rule	Average Cost per Entity	Ratio of Average Cost to Revenues	Ratio of Average Cost to Profits
5221	Depository Credit Intermediation	$11,350,517	7,957	$1,426,482	15.59%	*	$222,413	$33,848	$4.25	0.000%	0.002%
5222	Nondepository Credit Intermediation	$14,904,489	21,695	$687,001	11.43%	*	$78,522	$59,515	$2.74	0.000%	0.003%
5223	Activities Related to Credit Intermediation	$12,461,500	26,458	$470,992	9.01%	**	$42,442	$87,199	$3.30	0.001%	0.008%
5231	Securities and Commodity Contracts Intermediation and Brokerage	$12,164,444	12,099	$1,005,409	10.15%	*	$102,072	$61,188	$5.06	0.001%	0.005%
5232	Securities and Commodity Exchanges	$191,152	110	$1,737,742	10.11%	*	$175,691	$516	$4.69	0.000%	0.003%
5239	Other Financial Investment Activities	$30,889,815	39,095	$790,122	10.11%	*	$79,884	$107,623	$2.75	0.000%	0.003%
5241	Insurance Carriers	$9,280,142	6,133	$1,513,149	28.35%	*	$429,009	$20,639	$3.37	0.000%	0.001%
5242	Agencies, Brokerages, and Other Insurance Related Activities	$51,888,775	125,791	$412,500	5.12%	*	$21,110	$198,180	$1.58	0.000%	0.007%
5259	Other Investment Pools and Funds	$4,409,909	1,957	$2,253,403	5.12%	*	$115,317	$6,908	$3.53	0.000%	0.003%
5311	Lessors of Real Estate	$64,393,740	93,546	$688,364	64.80%	*	$446,050	$437,293	$4.67	0.001%	0.001%
5312	Offices of Real Estate Agents and Brokers	$58,113,104	103,231	$562,942	13.34%	*	$75,118	$400,307	$3.88	0.001%	0.005%
5313	Activities Related to Real Estate	$27,396,855	66,691	$410,803	9.66%	*	$39,672	$349,555	$5.24	0.001%	0.013%

Table V-33, contd.
Cost Impacts on Very Small Business Entities (fewer than 20 employees) Affected by OSHA's Proposed Revision to Subparts D and I (per Entity, by 4-Digit NAICS Code)

NAICS	Industry	Estimated Receipts, 2006 ($1,000)[a]	Entities [b]	Average Receipts per Entity	Profit Rate [c]		Estimated Profits per Entity	Estimated Cost of the Proposed Rule	Average Cost per Entity	Ratio of Average Cost to Revenues	Ratio of Average Cost to Profits
5321	Automotive Equipment Rental and Leasing	$3,292,219	4,120	$799,082	13.34%	**	$106,627	$19,741	$4.79	0.001%	0.004%
5322	Consumer Goods Rental	$4,071,412	11,393	$357,361	3.20%	*	$11,433	$50,436	$4.43	0.001%	0.039%
5323	General Rental Centers	$1,674,477	2,984	$561,152	4.58%	*	$25,683	$16,334	$5.47	0.001%	0.021%
5324	Commercial and Industrial Machinery and Equipment Rental and Leasing	$6,848,009	7,333	$933,862	4.58%	**	$42,741	$50,405	$6.87	0.001%	0.016%
5331	Lessors of Nonfinancial Intangible Assets (except Copyrighted Works)	$2,649,989	1,829	$1,448,873	6.44%	*	$93,372	$5,544	$3.03	0.000%	0.003%
5411	Legal Services	$82,265,064	172,259	$477,566	31.10%	**	$148,544	$501,898	$2.91	0.001%	0.002%
5412	Accounting, Tax Preparation, Bookkeeping, and Payroll Services	$29,629,156	100,204	$295,688	8.85%	**	$26,159	$477,643	$4.77	0.002%	0.018%
5413	Architectural, Engineering, and Related Services	$47,192,342	89,960	$524,593	8.74%	**	$45,875	$677,538	$7.53	0.001%	0.016%
5414	Specialized Design Services	$15,325,203	32,491	$471,675	4.81%	**	$22,675	$160,943	$4.95	0.001%	0.022%

Table V-33, contd.
Cost Impacts on Very Small Business Entities (fewer than 20 employees) Affected by OSHA's Proposed Revision to Subparts D and I (per Entity, by 4-Digit NAICS Code)

NAICS	Industry	Estimated Receipts, 2006 ($1,000)[a]	Entities [b]	Average Receipts per Entity	Profit Rate [c]		Estimated Profits per Entity	Estimated Cost of the Proposed Rule	Average Cost per Entity	Ratio of Average Cost to Revenues	Ratio of Average Cost to Profits
5415	Computer Systems Design and Related Services	$40,080,133	92,442	$433,571	6.41%	**	$27,772	$563,590	$6.10	0.001%	0.022%
5416	Management, Scientific, and Technical Consulting Services	$56,399,491	130,867	$430,968	5.96%	**	$25,698	$698,904	$5.34	0.001%	0.021%
5417	Scientific Research and Development Services	$9,386,971	10,458	$897,588	7.95%	**	$71,354	$88,030	$8.42	0.001%	0.012%
5418	Advertising and Related Services	$21,120,642	32,970	$640,602	8.66%	**	$55,502	$2,488,575	$75.48	0.012%	0.136%
5419	Other Professional, Scientific, and Technical Services	$28,309,467	59,744	$473,846	5.61%	**	$26,563	$292,251	$4.89	0.001%	0.018%
5511	Management of Companies and Enterprises	$11,224,566	5,747	$1,953,117	7.10%	**	$138,734	$37,706	$6.56	0.000%	0.005%
5611	Office Administrative Services	$12,118,706	20,907	$579,648	14.63%	*	$84,813	$111,475	$5.33	0.001%	0.006%
5612	Facilities Support Services	$583,310	964	$605,093	4.46%	*	$26,988	$8,440	$8.76	0.001%	0.032%
5613	Employment Services	$6,016,114	14,182	$424,208	4.46%	**	$18,920	$85,318	$6.02	0.001%	0.032%
5614	Business Support Services	$10,753,445	26,155	$411,143	2.65%	*	$10,887	$127,182	$4.86	0.001%	0.045%

Table V-33, contd.
Cost Impacts on Very Small Business Entities (fewer than 20 employees) Affected by OSHA's Proposed Revision to Subparts D and I (per Entity, by 4-Digit NAICS Code)

NAICS	Industry	Estimated Receipts, 2006 ($1,000)[a]	Entities [b]	Average Receipts per Entity	Profit Rate [c]		Estimated Profits per Entity	Estimated Cost of the Proposed Rule	Average Cost per Entity	Ratio of Average Cost to Revenues	Ratio of Average Cost to Profits
5615	Travel Arrangement and Reservation Services	$5,459,301	16,178	$337,452	4.46%	**	$15,051	$73,862	$4.57	0.001%	0.030%
5616	Investigation and Security Services	$5,415,118	15,858	$341,475	3.73%	*	$12,749	$103,358	$6.52	0.002%	0.051%
5617	Services to Buildings and Dwellings	$44,284,357	157,597	$280,997	4.46%	*	$12,533	$66,007,087	$418.83	0.149%	3.342%
5619	Other Support Services	$10,892,149	16,890	$644,887	4.46%	*	$28,763	$89,300	$5.29	0.001%	0.018%
5621	Waste Collection	$4,158,432	6,066	$685,531	5.83%	*	$39,956	$46,360	$7.64	0.001%	0.019%
5622	Waste Treatment and Disposal	$1,178,456	1,254	$939,758	4.61%	*	$43,312	$12,979	$10.35	0.001%	0.024%
5629	Remediation and Other Waste Management Services	$3,905,788	6,382	$612,001	4.61%	*	$28,206	$79,635	$12.48	0.002%	0.044%
6111	Elementary and Secondary Schools	$3,208,243	7,948	$403,654	4.61%	**	$18,604	$26,604	$3.35	0.001%	0.018%
6112	Junior Colleges	$91,743	190	$482,860	8.06%	**	$38,902	$922	$4.85	0.001%	0.012%
6113	Colleges, Universities, and Professional Schools	$517,093	798	$647,987	8.06%	**	$52,205	$3,909	$4.90	0.001%	0.009%
6114	Business Schools and Computer and Management Training	$2,784,832	5,953	$467,803	8.06%	**	$37,689	$20,664	$3.47	0.001%	0.009%
6115	Technical and Trade Schools	$2,487,317	5,624	$442,268	8.06%	**	$35,631	$26,018	$4.63	0.001%	0.013%

Table V-33, contd.
Cost Impacts on Very Small Business Entities (fewer than 20 employees) Affected by OSHA's Proposed Revision to Subparts D and I (per Entity, by 4-Digit NAICS Code)

NAICS	Industry	Estimated Receipts, 2006 ($1,000)[a]	Entities [b]	Average Receipts per Entity	Profit Rate [c]		Estimated Profits per Entity	Estimated Cost of the Proposed Rule	Average Cost per Entity	Ratio of Average Cost to Revenues	Ratio of Average Cost to Profits
6116	Other Schools and Instruction	$7,122,626	30,637	$232,484	8.06%	**	$18,730	$93,804	$3.06	0.001%	0.016%
6117	Educational Support Services	$2,286,099	5,479	$417,247	8.06%	**	$33,616	$19,884	$3.63	0.001%	0.011%
6211	Offices of Physicians	$119,068,918	172,296	$691,072	8.06%	*	$55,676	$643,955	$3.74	0.001%	0.007%
6212	Offices of Dentists	$73,670,884	115,748	$636,477	4.45%	*	$28,307	$392,128	$3.39	0.001%	0.012%
6213	Offices of Other Health Practitioners	$34,047,240	104,920	$324,507	7.34%	*	$23,822	$353,202	$3.37	0.001%	0.014%
6214	Outpatient Care Centers	$6,037,094	8,987	$671,759	8.13%	*	$54,610	$44,626	$4.97	0.001%	0.009%
6215	Medical and Diagnostic Laboratories	$5,870,390	6,215	$944,552	5.71%	*	$53,887	$28,579	$4.60	0.000%	0.009%
6216	Home Health Care Services	$3,269,216	8,985	$363,853	5.46%	*	$19,873	$37,189	$4.14	0.001%	0.021%
6219	Other Ambulatory Health Care Services	$2,197,879	3,890	$565,007	5.46%	*	$30,860	$18,201	$4.68	0.001%	0.015%
6221	General Medical and Surgical Hospitals	$771,204	140	$5,508,604	5.46%	**	$300,873	$739	$5.28	0.000%	0.002%
6222	Psychiatric and Substance Abuse Hospitals	$46,165	58	$795,944	5.38%	**	$42,831	$324	$5.58	0.001%	0.013%
6223	Specialty (except Psychiatric and Substance Abuse) Hospitals	$93,130	135	$689,853	5.38%	**	$37,122	$823	$6.10	0.001%	0.016%

Table V-33, contd.
Cost Impacts on Very Small Business Entities (fewer than 20 employees) Affected by OSHA's Proposed Revision to Subparts D and I (per Entity, by 4-Digit NAICS Code)

NAICS	Industry	Estimated Receipts, 2006 ($1,000)[a]	Entities [b]	Average Receipts per Entity	Profit Rate [c]		Estimated Profits per Entity	Estimated Cost of the Proposed Rule	Average Cost per Entity	Ratio of Average Cost to Revenues	Ratio of Average Cost to Profits
6231	Nursing Care Facilities	$1,275,511	2,032	$627,712	5.38%	**	$33,778	$8,003	$3.94	0.001%	0.012%
6232	Residential Mental Retardation, Mental Health and Substance Abuse Facilities	$1,249,694	3,904	$320,106	5.38%	**	$17,226	$16,193	$4.15	0.001%	0.024%
6233	Community Care Facilities for the Elderly	$2,775,128	9,635	$288,026	5.38%	**	$15,499	$31,939	$3.31	0.001%	0.021%
6239	Other Residential Care Facilities	$698,202	2,080	$335,674	5.38%	**	$18,063	$8,192	$3.94	0.001%	0.022%
6241	Individual and Family Services	$9,472,626	29,805	$317,820	5.38%	**	$17,103	$80,760	$2.71	0.001%	0.016%
6242	Community Food and Housing, and Emergency and Other Relief Services	$3,674,137	6,970	$527,136	5.38%	**	$28,366	$23,265	$3.34	0.001%	0.012%
6243	Vocational Rehabilitation Services	$946,646	2,407	$393,289	5.38%	**	$21,164	$7,658	$3.18	0.001%	0.015%
6244	Child Day Care Services	$8,345,592	49,004	$170,304	5.38%	**	$9,164	$122,439	$2.50	0.001%	0.027%
7111	Performing Arts Companies	$4,227,646	7,944	$532,181	5.38%	*	$28,638	$38,897	$4.90	0.001%	0.017%
7112	Spectator Sports	$2,180,804	3,761	$579,847	9.76%	*	$56,583	$17,459	$4.64	0.001%	0.008%

Table V-33, contd.
Cost Impacts on Very Small Business Entities (fewer than 20 employees) Affected by OSHA's Proposed Revision to Subparts D and I (per Entity, by 4-Digit NAICS Code)

NAICS	Industry	Estimated Receipts, 2006 ($1,000)[a]	Entities [b]	Average Receipts per Entity	Profit Rate [c]		Estimated Profits per Entity	Estimated Cost of the Proposed Rule	Average Cost per Entity	Ratio of Average Cost to Revenues	Ratio of Average Cost to Profits
7113	Promoters of Performing Arts, Sports, and Similar Events	$3,622,249	4,923	$735,781	9.76%	*	$71,799	$47,610	$9.67	0.001%	0.013%
7114	Agents and Managers for Artists, Athletes, Entertainers, and Other Public Figures	$2,354,758	3,318	$709,692	9.76%	*	$69,254	$13,105	$3.95	0.001%	0.006%
7115	Independent Artists, Writers, and Performers	$10,029,605	19,062	$526,157	9.76%	*	$51,344	$69,450	$3.64	0.001%	0.007%
7121	Museums, Historical Sites, and Similar Institutions	$2,024,339	5,519	$366,794	9.76%	**	$35,793	$21,583	$3.91	0.001%	0.011%
7131	Amusement Parks and Arcades	$740,564	1,921	$385,510	7.74%	*	$29,829	$8,668	$4.51	0.001%	0.015%
7132	Gambling Industries	$1,024,558	1,421	$721,012	6.33%	*	$45,636	$5,466	$3.85	0.001%	0.008%
7139	Other Amusement and Recreation Industries	$16,601,038	51,143	$324,600	6.33%	*	$20,545	$193,346	$3.78	0.001%	0.018%
7211	Traveler Accommodation	$14,764,010	33,190	$444,833	6.33%	*	$28,155	$174,820	$5.27	0.001%	0.019%
7212	RV (Recreational Vehicle) Parks and Recreational Camps	$2,567,079	6,059	$423,680	5.64%	*	$23,912	$27,937	$4.61	0.001%	0.019%
7213	Rooming and Boarding Houses	$562,031	2,077	$270,597	5.64%	*	$15,272	$8,645	$4.16	0.002%	0.027%

Table V-33, contd.
Cost Impacts on Very Small Business Entities (fewer than 20 employees) Affected by OSHA's Proposed Revision to Subparts D and I (per Entity, by 4-Digit NAICS Code)

NAICS	Industry	Estimated Receipts, 2006 ($1,000)[a]	Entities [b]	Average Receipts per Entity	Profit Rate [c]		Estimated Profits per Entity	Estimated Cost of the Proposed Rule	Average Cost per Entity	Ratio of Average Cost to Revenues	Ratio of Average Cost to Profits
7221	Full-Service Restaurants	$43,491,255	138,277	$314,523	5.64%	*	$17,751	$523,192	$3.78	0.001%	0.021%
7222	Limited-Service Eating Places	$36,973,551	138,820	$266,342	4.98%	*	$13,257	$330,432	$2.38	0.001%	0.018%
7223	Special Food Services	$3,796,612	12,449	$304,973	4.98%	*	$15,179	$73,194	$5.88	0.002%	0.039%
7224	Drinking Places (Alcoholic Beverages)	$10,512,053	41,469	$253,492	4.98%	*	$12,617	$120,972	$2.92	0.001%	0.023%
8111	Automotive Repair and Maintenance	$58,528,451	144,622	$404,700	4.98%	*	$20,143	$2,022,265	$13.98	0.003%	0.069%
8112	Electronic and Precision Equipment Repair and Maintenance	$4,397,630	10,849	$405,349	3.68%	*	$14,933	$153,210	$14.12	0.003%	0.095%
8113	Commercial and Industrial Machinery and Equipment (except Automotive and Electronic) Repair and Maintenance	$10,792,442	21,337	$505,809	5.17%	*	$26,167	$319,551	$14.98	0.003%	0.057%
8114	Personal and Household Goods Repair and Maintenance	$5,787,466	21,812	$265,334	5.17%	*	$13,727	$203,314	$9.32	0.004%	0.068%
8121	Personal Care Services	$14,061,459	90,681	$155,065	5.17%	*	$8,022	$220,794	$2.43	0.002%	0.030%
8122	Death Care Services	$8,082,879	14,892	$542,767	5.67%	*	$30,794	$79,455	$5.34	0.001%	0.017%

Table V-33, contd.
Cost Impacts on Very Small Business Entities (fewer than 20 employees) Affected by OSHA's Proposed Revision to Subparts D and I (per Entity, by 4-Digit NAICS Code)

NAICS	Industry	Estimated Receipts, 2006 ($1,000)[a]	Entities [b]	Average Receipts per Entity	Profit Rate [c]		Estimated Profits per Entity	Estimated Cost of the Proposed Rule	Average Cost per Entity	Ratio of Average Cost to Revenues	Ratio of Average Cost to Profits
8123	Dry-cleaning and Laundry Services	$7,114,322	32,044	$222,017	5.67%	*	$12,596	$157,751	$4.92	0.002%	0.039%
8129	Other Personal Services	$6,775,433	24,454	$277,069	5.67%	*	$15,720	$124,321	$5.08	0.002%	0.032%
8131	Religious Organizations	$37,868,483	156,829	$241,464	5.67%	*	$13,700	$800,794	$5.11	0.002%	0.037%
8132	Grantmaking and Giving Services	$22,193,695	12,660	$1,753,057	2.55%	*	$44,781	$54,804	$4.33	0.000%	0.010%
8133	Social Advocacy Organizations	$5,284,519	10,750	$491,583	2.55%	*	$12,557	$55,353	$5.15	0.001%	0.041%
8134	Civic and Social Organizations	$8,327,806	25,609	$325,191	2.55%	*	$8,307	$117,185	$4.58	0.001%	0.055%
8139	Business, Professional, Labor, Political, and Similar Organizations	$28,760,289	58,330	$493,062	2.55%	*	$12,595	$328,184	$5.63	0.001%	0.045%

[a] Estimated based on 2002 receipts and payroll data from U.S. Census Bureau, *Statistics of U.S. Businesses*, 2002 and payroll data from U.S. Census Bureau, Statistics of U.S. Businesses, 2006. Receipts were not available for 2006 at disaggregated industry levels, but were estimated assuming the ratio of receipts to payroll remained unchanged between 2002 and 2006.
[b] U.S. Census Bureau, *Statistics of U.S. Businesses*, 2006.
[c] Estimated from average of the yearly ratios of net income to total receipts as reported by the U.S. Internal Revenue Service, *Corporation Source Book, 2000 – 2006*. Data were not available at disaggregated levels for all industries; profit rates at more highly aggregated levels are used for such industries.
N/A: Data not available.

Table V-33, contd.
Cost Impacts on Very Small Business Entities (fewer than 20 employees) Affected by OSHA's Proposed Revision to Subparts D and I (per Entity, by 4-Digit NAICS Code)

NAICS	Industry	Estimated Receipts, 2006 ($1,000)[a]	Entities [b]	Average Receipts per Entity	Profit Rate [c]	Estimated Profits per Entity	Estimated Cost of the Proposed Rule	Average Cost per Entity	Ratio of Average Cost to Revenues	Ratio of Average Cost to Profits

*Profit rate imputed from corresponding 3-digit NAICS industry.
** Profit rate imputed from corresponding 2-digit NAICS industry.
Source: U.S. Dept. of Labor, OSHA, Directorate of Evaluation and Analysis, Office of Regulatory Analysis, based on ERG, 2007.

2. A Description of the Reasons Why Action by the Agency Is Being Considered

Employees in general industry performing construction, installation, maintenance, and repair tasks are exposed to a range of significant slip, trip, and fall hazards that can and do cause serious injury and death. OSHA estimates that approximately 300,000 serious injuries and 300 fatalities occur annually among these employees. Although some of these incidents may have been prevented with better compliance with existing safety standards, research and analyses conducted by OSHA have found that many preventable injuries and fatalities would continue to occur even if full compliance with the existing standards were achieved. Without counting incidents that would potentially have been prevented with compliance with existing standards, an estimated 3,706 additional injuries and 20 fatalities would be prevented annually through full compliance with the proposed standards.

As explained above, additional benefits associated with this rulemaking involve providing updated, clear, and consistent safety standards regarding fall protection in general industry to the relevant employers, employees, and interested members of the public. The existing OSHA standards for walking-working surfaces in general industry are over 30 years old and inconsistent with the more recently promulgated standards addressing fall protection in construction. OSHA believes that the proposed updated standards are easier to understand and to apply and will benefit employers and employees by facilitating compliance while improving safety.

3. Statement of the Objectives of, and Legal Basis for, the Proposed Rule

The primary objective of the proposed standards is to provide an increased degree of occupational safety for employees in general industry performing construction, installation, maintenance, and repair tasks. As stated above, an estimated 3,706 injuries and 20 fatalities would be prevented annually through compliance with the proposed standards in addition to those that may be prevented through compliance with existing standards. Another objective of the proposed rulemaking is to provide updated, clear, and consistent safety standards regarding fall protection in general industry to the relevant employers, employees, and interested members of the public. The proposed updated standards are easier to understand and to apply, and they will benefit employers by facilitating compliance while improving safety.

The legal basis for the proposed rule is the responsibility given the Department of Labor through the Occupational Safety and Health (OSH) Act of 1970 (29 U.S.C. 561 *et seq.*). The OSH Act authorizes and obligates the Secretary of Labor to promulgate mandatory occupational safety and health standards as necessary "to assure so far as possible every working man and woman in the Nation safe and healthful working conditions and to preserve our human resources." 29 U.S.C. 651(b). The legal authority can also be cited as 29 U.S.C. 655(b).

4. Description of and Estimate of the Number of Small Entities to Which the Proposed Rule Will Apply

OSHA has completed a preliminary analysis of the impacts associated with this proposal, including an analysis of the type and number of small entities to which the proposed rule would apply. The proposed standards would primarily impact workers performing construction, installation, maintenance, and repair tasks throughout general industry. To determine the number of small entities potentially affected by this rulemaking, OSHA used the definitions of small entities developed by the Small Business Administration for each industry. In section C of this PEA, OSHA discussed its methodology for determining the number of affected small entities and presented its estimates in Table V–2. As shown in that table, OSHA estimates that 5.1 million small entities, employing 43.5 million employees, including 9.3 million employees directly exposed to slip, trip, and fall hazards, would be covered by the scope of the proposed standard. Industries expected to have the highest number of affected at-risk employees include wired telecommunications carriers (606,000 employees); automotive repair and maintenance (480,000 employees); and lessors of real estate (231,000 employees).

5. Description of the Projected Reporting, Recordkeeping and Other Compliance Requirements of the Proposed Rule

OSHA is proposing to revise the standards addressing the work practices to be used, and other requirements to be followed, for the activities in general industry that expose workers to slip, trip, and fall hazards. The existing standards in subpart D deal with the hazards of walking and working surfaces and are part of the initial package of standards promulgated by OSHA in 1971 under section 6(a) of the Occupational Safety and Health Act of 1970 (the Act) (29 U.S.C. 655(a)). During the period since OSHA promulgated subpart D, interested parties have suggested changes in these regulations. The majority of the existing OSHA standards for walking-working surfaces are over 30 years old and inconsistent with numerous national consensus standards and more recently promulgated OSHA standards addressing fall protection elsewhere in general industry and construction.

Section E, Costs of Compliance, described, for categories of employee training, the administrative costs that are expected to present a new burden for affected employers. The costs to document the training and re-training of employees are not considered by OSHA to be recordkeeping, but rather are seen as typical administrative expenses in a safety program.

6. Federal Rules Which May Duplicate, Overlap, or Conflict With the Proposed Rule

OSHA has not identified any Federal rules which may duplicate, overlap, or conflict with the proposal, and requests comments from the public regarding this issue.

7. Alternatives to the Proposed Rule Which Accomplish the Stated Objectives of Applicable Statutes and Which Minimize Any Significant Economic Impact of the Proposed Rule on Small Entities

OSHA evaluated several alternatives to the proposed standards to ensure that the proposed requirements would accomplish the stated objectives of applicable statutes and would minimize any significant economic impact of the proposal on small entities. In developing the proposal, and especially in establishing compliance or reporting requirements or timetables that affect small entities, the resources available to small entities were taken into account. Compliance and reporting requirements under the proposal that are applicable to small entities were clarified, consolidated, and simplified to the extent practicable. Wherever possible, OSHA has proposed the use of performance rather than design standards. An exemption from coverage of the rule for small entities was not considered to be a viable option because the safety and health of the affected employees would be unduly jeopardized.

Many other specific alternatives to the proposed requirements were

considered. Section IV of the notice, Summary and Explanation of the Proposed Rule, provides discussion and explanation of the particular requirements of the proposal.

OSHA has made every effort to provide maximum flexibility in the choice of controls that are permitted under the proposed rule. To demonstrate the relative economic efficiency (*i.e.,* cost effectiveness) of the proposed standard, OSHA has selected eight provisions in proposed subpart D where alternative control strategies were considered but rejected as inefficient from a cost-effectiveness perspective. For these eight provisions, the table below presents OSHA's evaluation of the potential impacts associated with alternatives to the proposed requirements.

TABLE V–34—IMPACTS ASSOCIATED WITH REGULATORY ALTERNATIVES FOR SELECTED PROVISIONS IN PROPOSED SUBPART D

Provision	Primary-choice control(s)	Alternative control(s)	Potential impacts of alternative control(s)
Section 1910.23 Ladders.	Covers all ladders except for machine-integrated or fire fighting/rescue ladders.	All ladders in scope.	Probably not significant in costs, but not justified with respect to benefits.
Section 1910.24 Step bolts and manhole steps.	Design changes to step bolts and manhole steps on new installations must be performed 90 days after the standard's effective date.	Eliminate grandfathering of older structures.	Requirement to ensure that all step bolts and manhole steps meet the strength and design criteria in proposed subpart D would demand technical resources that could exceed the capacity of affected industries in the near term, given the need to inspect all existing manholes and make changes to many.
Section 1910.25 Stairways.	Where ship stairs and spiral stairs are used as primary means of egress, they must meet the requirements specified by the standard.	Prohibit ship stairs and spiral stairs in all new installations.	Potentially large costs with few benefits.
Section 1910.26 Dockboards (bridge plates).	In paragraph (b), OSHA proposes that dockboards put into service at least 90 days after the effective date of the final rule be designed, constructed, and maintained to prevent equipment (such as hand trucks and vehicles) from running off the edge.	Specify the means of achieving the desired performance.	Probably modest costs but with few benefits.
Section 1910.27 Scaffolds and rope descent systems.	Proposed paragraph (b)(1) prohibits the use of a rope descent system (RDS) at heights greater than 300 feet (91.4 m) above grade unless access cannot otherwise be attained safely and practicably.	Allow use of RDS at all heights.	OSHA states earlier in this PEA that impacts of the primary choice would be minor due to current availability of powered platforms or other systems for washing windows on tall buildings. OSHA requests comment on this assessment.
Section 1910.28 Duty to have fall protection.	The proposed rule allows employers to choose from several options in providing fall protection. These include conventional fall protection systems such as guardrail systems, safety net systems, and personal fall protection systems (restraint systems, personal fall arrest systems, and positioning systems) and, in some instances, non-conventional means. An example of non-conventional means would be the establishment of a designated area in which an employee is to work.	Specify, surface by surface, the means of achieving the desired performance.	Depending on specifications, costs could be substantial with modest benefits.
Section 1910.28 Duty to have fall protection.	Proposed paragraph (b)(8) is a new provision, proposed to address the specific fall hazard created by vehicle repair pits and assembly pits. Access to the edge (within 6 feet (1.8 m)) of the pit must be limited to trained, authorized employees ((b)(8)(i)); the floor must be marked ((b)(8)(ii)) to designate the unprotected area; and caution signs must be posted to warn employees of the unprotected area ((b)(8)(iii)).	Require conventional fall protection systems: guardrails, personal fall arrest or travel restraint systems.	Potentially significant costs with feasibility/practicability concerns.
Section 1910.28 Duty to have fall protection.	In proposed paragraph (b)(9), OSHA addresses fall hazards related to fixed ladders. Under the proposed standard, no fall protection is required when employees are exposed to falls from fixed ladders of 24 feet (7.3 m) in length or less. If the employer chooses a cage or well, no ladder sections may exceed 50 feet (15.2 m) in length, and each section must be offset from adjacent sections with landing platforms at maximum intervals of 50 feet (15.2 m). If an employer chooses a ladder safety system, no additional measures are proposed.	For fixed ladders, require that cages, wells, and landing platforms be provided, but disallow the use of ladder safety systems.	Major costs and modest benefits; tens of thousands of fixed ladders would need cages, wells, and landing platforms.

Source: U.S. Dept. of Labor, OSHA, Directorate of Evaluation and Analysis, Office of Regulatory Analysis.

Non-regulatory alternatives were also considered in determining the appropriate approach to reducing occupational hazards associated with work on elevated or slippery surfaces in general industry. These alternatives were discussed in the section of this PEA entitled "Examination of Alternative Approaches."

I. References

American National Standard Institute/International Window Cleaning Association. (ANSI/IWCA, 2001.) Window Cleaning Safety. IWCA I–14.1–2001, October 2001.

Amodeo, Linda. (Amodeo, 2003.) Comments submitted to OSHA Docket S029, Exhibit 3–14, Linda Amodeo, Vice President, City Wide Building Services, Inc., July 24, 2003.

Bureau of Labor Statistics. (BLS, 2007.) Consumer Price Index, All Urban Consumers, U.S. City Average, June 15, 2007. *ftp://ftp.bls.gov/pub/special.requests/cpi/cpiai.txt.*

Bureau of Labor Statistics. (BLS, 2008.) Occupational Employment Statistics, 2008. *http://www.bls.gov/oes/home.htm.*

Bureau of Labor Statistics. (BLS, 2008.) Job Openings and Labor Turnover Survey, 2008.

Cohen, Alexander and Michael Colligan. (Cohen and Colligan, 1998.) *Assessing Occupational Safety and Health Training: A Literature Review.* DDHS (NIOSH) Publication 98–145, June 1998.

Council on Tall Buildings and Urban Habitat. (CTBUH, 2006.) Web Site: *http://www.ctbuh.org/.* Accessed 23 August 2006. Database hosted by Emporis. *http://buildings.emporis.com/?nav=theplatformconcept&lng=3.* Accessed by ERG on August 23, 2006.

Department of Energy. (DOE, 2006.) 2003 Commercial Buildings Energy Consumption Survey. Table B10: Number of Floors, Number of Buildings and Floorspace for Non-Mall Commercial Buildings. Energy Information Administration, 2006. *http://www.eia.doe.gov/emeu/cbecs/cbecs2003/detailed_tables_2003/detailed_tables_2003.html.*

Department of Energy. (DOE, 2004.) 2001 Residential Energy Consumption Surveys. 2001 Housing Characteristics Tables. Table HC1–1a. Housing Unit Characteristics by Climate Zone, Million U.S. Households, (2001). Energy Information Administration, 2004. *http://www.eia.doe.gov/emeu/recs/recs2001/detail_tables.html.*

DiChacho, Rosita. (DiChacho. 2006.) Personal communication between Rosita DiChacho, New York Department of Labor, Division of Safety & Health, Engineering Services Unit and Maureen F. Kaplan, Eastern Research Group, August 23, 2006.

Eastern Research Group, Inc. (ERG, 2007.) *Technical and Analytical Support and Docket Review for OSHA's Preliminary Analysis of Costs, Benefits, and Economic Impacts for OSHA's Proposed Standard for Walking and Working Surfaces.* Final Report. Prepared under Contract No. GS10F0125P for the U.S. Dept. of Labor, Occupational Safety and Health Administration, Directorate of Evaluation and Analysis, Office of Regulatory Analysis, July 27, 2007. (Ex. 6.)

Eastern Research Group, Inc. (ERG, 1999.) *PPE Cost Survey: Final Report.* Prepared under Contract No. J–9–F–9–0010 for the U.S. Dept. of Labor, Occupational Safety and Health Administration, Office of Regulatory Analysis, June 23, 1999. Docket No. S–042, Exhibit 14 (Ex. OSHA–S042–2006–0667–0318).

Institute of Electrical and Electronics Engineers. (IEEE, 2006.) IEEE Standard for Fall Protection for Utility Work. IEEE Standard 1307–2004. *http://standards.ieee.org/reading/ieee/std/numerical.html.* Accessed by ERG on July 24, 2006.

Kreidenweis, Andy. (Kreidenweis, 2003.) Comments submitted to OSHA Docket S–029, Exhibit 3–126, Andy Kreidenweis, Braco Window Cleaning Service Inc., July 30, 2003.

Lebel, Marc. (Lebel, 2003.) Comments submitted to OSHA Docket S–029, Exhibit 3–1. Marc Lebel, Pro-Bel Enterprises Limited, July 18, 2003.

National Association of Tower Erectors. (NATE, 2006.) Web site: *http://www.natehome.com/MemberBenefitsServices/NATECLIMBERTRAININGSTANDARD/Index.cfm).* Accessed by ERG on July 24, 2006.

National Coalition Against the Misuses of Pesticides. (NCAMP, 1997.) Poison Poles—A Report About Their Toxic Trail and Safer Alternatives. Estimate of Pole Miles and Distribution Poles by State, 1997. *http://www.ncamp.org/poisonpoles/tables/table2.html.*

National Cooperative Highway Research Program. (NCHRP, 2004.) NCHRP Report 500: Guidance for Implementation of the AASHTO Strategic Highway Safety Plan. Volume 8: A Guide for Reducing Collisions Involving Utility Poles. Transportation Research Board, 2004. *http://safety.transportation.org/htmlguides/utl_pole/exec_sum.htm.*

National Fire Protection Association. (NFPA, 2006.) Standard 101. Life Safety Code. 2006 Edition. 7.2.2.2.3 Spiral stairs. *http://www.nfpa.org/freecodes/free_access_document.asp.* Accessed by ERG on July 24, 2006.

National Institute for Occupational Safety and Health. (NIOSH, 1988.) U.S. Department of Health and Human Services. Centers for Disease Control. National Institute for Occupational Safety and Health. *National Occupational Exposure Survey.* Volume III: *Analysis of Management Interview Responses,* March 1988.

Occupational Safety and Health Administration. (OSHA, 2009.) Analysis of OSHA Integrated Management Information System inspection data, 1995–2001. January 2009.

Occupational Safety and Health Administration. (OSHA, 2007.) Accident Investigation Search, 2007. *http://www.osha.gov/pls/imis/accidentsearch.html.*

Occupational Safety and Health Administration. (OSHA, 2006a.) Accident Investigation Search, 2006. *http://www.osha.gov/pls/imis/accidentsearch.html.*

Occupational Safety and Health Administration. (OSHA, 2006b.) Standard Interpretations: 2/10/2006—The use of ship's stairs instead of fixed stairs in general industry. *http://www.osha.gov/pls/oshaweb/owadisp.show_document?p_table=INTERPRETATIONS&p_id=25301.* Accessed by ERG on July 24, 2006.

Occupational Safety and Health Administration. (OSHA, 2006c.) Standard Interpretations: 2/10/2006—Circumstances under which installation of fixed industrial stairs with a slope between 50 degrees and 70 degrees from the horizontal would be considered a de minimis violation. *http://www.osha.gov/pls/oshaweb/owadisp.show_document?p_table=INTERPRETATIONS&p_id=25299.* Accessed by ERG on July 24, 2006.

Occupational Safety and Health Administration. (OSHA, 2006d.) OSHA Web site. Resource Center Loan Program. Materials by subject. *http://www.osha.gov/dcsp/ote/resource-center/loan.html.* Accessed by ERG on July 28.

Occupational Safety and Health Administration. (OSHA, 2003.) Standard Interpretations: 05/05/2003—Standards applicable to step bolts and manhole steps; load requirements for step bolts. *http://www.osha.gov/pls/oshaweb/owadisp.show_document?p_table=INTERPRETATIONS&p_id=24564* corrected 4/4/2005. Accessed by ERG on July 24, 2006.

Occupational Safety and Health Administration. (OSHA, 2003.) 29 CFR Part 1910 Walking and Working Surfaces; Personal Protective equipment (Fall Protection Systems); Proposed Rule. **Federal Register** 68: 23528–23568, May 2, 2003.

Occupational Safety and Health Administration. (OSHA, 1996.) 29 CFR Part 1926. Safety Standards for Scaffolds Used in the Construction Industry; Final Rule. **Federal Register** 61: 46026–46126, August 30, 1996.

Occupational Safety and Health Administration. (OSHA, 1994.) Background Document to the Regulatory Impact and Regulatory Flexibility Assessment for the PPE Standard. Office of Regulatory Analysis, March 15, 1994. Docket S–060, Exhibit 56.

Occupational Safety and Health Administration. (OSHA, 1993.) Fixed Ladders Used on Outdoor Advertising Structures/Billboards in the Outdoor Advertising Industry. OSHA Instruction STD 1–1.14, January 26, 1993. *http://www.osha.gov/pls/oshaweb/owadisp.show_document?p_table=DIRECTIVES&p_id=1756.* Accessed by ERG on August 25, 2006.

Occupational Safety and Health Administration. (OSHA, 1991a.)

December 5, 1989, letter from Mr. Thomas J. Shepich to Mr. Carl Pedersen regarding Descent Control Devices. Memorandum to Regional Administrators from Patricia K. Clark, Director, Directorate of Compliance Programs, March 12, 1991. OSHA Docket S–029, Exhibit 1–18.

Occupational Safety and Health Administration. (OSHA, 1991b.) Grant of Variance. **Federal Register** 56: 8801, March 1, 1991. *http://www.osha.gov/pls/oshaweb/owadisp.show_document?p_table=FEDERAL_REGISTER&p_id=13148.* Accessed by ERG on August 26, 2006.

Occupational Safety and Health Administration. (OSHA, 1990a.) Preliminary Regulatory Impact and Regulatory Flexibility Analysis of Proposed Subparts D and I of 29 CFR Part 1910 Walking and Working Surfaces. Occupational Safety and Health Administration, Office of Regulatory Analysis, March 6, 1990. OSHA Docket S–029, Exhibit 4.

Occupational Safety and Health Administration. (OSHA, 1990a.) Application of Gannett Outdoor Companies for a Variance Concerning Fixed Ladders. **Federal Register** 55: 26796–26797, June 29, 1990. *http://www.osha.gov/pls/oshaweb/owadisp.show_document?p_table=FEDERAL_REGISTER&p_id=13085.* Accessed by ERG on August 25, 2006.

Occupational Safety and Health Administration. (OSHA, 1981.) Occupational Safety and Health Administration. Standard Interpretations: 12/02/1981. Alternating tread type stair is approved as safe for use. *http://www.osha.gov/pls/oshaweb/owadisp.show_document?p_table=INTERPRETATIONS&p_id=18983.* Accessed by ERG on July 24, 2006.

Office of Management and Budget. (OMB, 2005.) Regulatory Reform of the U.S. Manufacturing Sector. *http://www.whitehouse.gov/OMB/inforeg/reports/manufacturing_initiative.pdf.* Accessed by ERG on July 24, 2006.

Office of Management and Budget. (OMB, 2003.) *Regulatory Analysis.* Circular A–4, September 17, 2003. *http://www.whitehouse.gov/omb/circulars/a004/a-4.pdf.*

Office of Management and Budget. (OMB, 2002.) *North American Industry Classification System—2002.* Executive Office of the President, 2002.

Platts.com. (Platts, 2007.) *2007 UDI Directory of Electric Power Producers and Distributors.* 115th Edition of the Electrical World Directory. The McGraw-Hill Companies, 2007.

Small Business Administration. (SBA, 1996.) Regulatory Flexibility Act of 1980 (Pub. L. 96–354), amended by the Small Business Regulatory Enforcement Fairness Act of 1996 (Pub. L. 104–121).

Small Business Administration. (SBA, 2006.) *Table of Small Business Size Standards Matched to North American Industry Classification System Codes, 2006. http://www.sba.gov/idc/groups/public/documents/sba_homepage/serv_sstd_tablepdf.pdf.*

U.S. Census Bureau. (Census Bureau, 2002/2006.) *Statistics of U.S. Businesses, 2002/2006. http://www.census.gov/csd/susb/index.html.*

U.S. Environmental Protection Agency. (U.S. EPA, 2000.) *Guidelines for Preparing Economic Analyses.* EPA 240–R–00–003, September 2000. *http://yosemite.epa.gov/ee/epa/eed.nsf/webpages/Guidelines.html;* Chapter 7 also available in OSHA Docket No. H–054a, Exhibit 35–334.

U.S. Internal Revenue Service. (IRS, 2003.) *Corporation Source Book, 2003. http://www.irs.gov/taxstats/bustaxstats/article/0,,id=149687,00.html.*

Viscusi, Kip and Joseph Aldy. (Viscusi and Aldy, 2003.) "The Value of a Statistical Life: A Critical Review of Market Estimates Throughout the World." *The Journal of Risk and Uncertainty,* 27–1 (2003): 5–76.

Workers' Compensation Research Institute. (WCRI, 1993.) "Income Replacement in California." WCRI Research Brief; Special Edition. Volume 9, number 4S, Cambridge, MA, December 1993. Also available in OSHA Docket S–777, Exhibit 26–1608.

Wright, Michael C. (Wright, 2003.) Comments submitted to OSHA Docket S–029, Exhibit 4–19, Michael C Wright, LJB, Inc., July 23, 2007.

Zeolla, Robert J. (Zeolla, 2003) Comments submitted to OSHA Docket S–029, Exhibit 4–6, Robert J. Zeolla, Jr., President, Sunset Window Cleaning Company. June 5, 2003.

VI. Applicability of Existing National Consensus Standards

Section 6(b)(8) of the Occupational Safety and Health Act of 1970 ("the Act"; 29 U.S.C. 655(b)(8)) requires OSHA to explain "why a rule promulgated by the Secretary differs substantially from an existing national consensus standard," by publishing "a statement of the reasons why the rule as adopted will better effectuate the purposes of the Act than the national consensus standard." The Agency is not proposing to adopt any of the 34 national consensus standards listed in the Reference section of the proposal because the Agency believes that it is too difficult and costly for employers, especially employers in small businesses, to determine which of these national consensus standards apply to their workplaces, and then to collate and organize the relevant standards for compliance purposes. In this regard, no single, national consensus standard would fully address all of the fall hazards found in most of these workplaces.

VII. OMB Review Under the Paperwork Reduction Act of 1995

The proposed Walking-Working Surfaces and Personal Protective Equipment (Fall Protection PPE) Standard contains collection of information (paperwork) requirements that are subject to review by the Office of Management and Budget ("OMB") under the Paperwork Reduction Act of 1995 ("PRA–95"), 44 U.S.C. 3501 *et seq.,* and OMB's regulations at 5 CFR part 1320. The Paperwork Reduction Act defines a "collection of information" as "the obtaining, causing to be obtained, soliciting, or requiring the disclosure to third parties or the public of facts or opinions by or for an agency regardless of form or format" (44 U.S.C. 3502(3)(A)). OSHA has OMB approval for the existing paperwork requirements contained in both the Walking and Working Surfaces Standard, and in the Personal Protective Equipment Standard in two separate Information Collection Requests (ICRs) titled, Standard on Walking-Working Surfaces (29 CFR part 1910, subpart D) OMB control number 1218–0199, and Personal Protective Equipment (PPE) for General Industry (29 CFR part 1910, subpart I), OMB Control number 1218–2005.

OSHA has submitted both ICRs addressing the collection of information requirements identified in this Notice of Proposed Rulemaking (NPRM) to OMB for review (44 U.S.C. 3507(d)). OSHA solicits comments on the collection of information requirements and the estimated burden hours associated with these collections, including comments on the following:

- Whether the proposed collection of information requirements are necessary for the proper performance of the Agency's functions, including whether the information is useful;
- The accuracy of OSHA's estimate of the burden (time and cost) of the information collection requirements, including the validity of the methodology and assumptions used;
- Ways to enhance the quality, utility, and clarity of the information collected; and
- Ways to minimize the burden on employers who must comply, for example, by using automated or other technological techniques for collecting and transmitting information.

The title, a description of the need for and proposed use of the information, a description of the likely respondents, and the proposed frequency of response to the information collections are described below for the collection of information requirements in the proposed revisions to subparts D and I,

along with an estimate of the annual reporting burden and cost.

• For proposed 29 CFR part 1910, subpart D:

Type of Review: Revision of a currently approved collection.

Title: Standard on Walking-Working Surfaces (29 CFR part 1910, subpart D).

OMB Control Number: 1218–0199.

Description and Proposed Use of the Collections of Information: The proposed standard would impose new information collection requirements for purposes of PRA–95 and removes collection of information requirements in the existing standard (*see* 1218–0199). The collection of information requirements in the proposed standard have not been approved by OMB. These two proposed requirements are described in the following paragraphs.

Proposed § 1910.23(b)(10) requires employers to place "Do Not Use" or similar language on signs on ladders with structural or other defects in accordance with § 1910.145 (Specifications for accident prevention signs and tags). This provision is necessary to protect workers from defective ladders.

Under proposed § 1910.28(b)(8), employers need not provide fall protection to employees who are exposed to falling into automotive, repair, or assembly pits provided certain conditions are met, including a requirement to post a caution sign stating "Caution—Open Floor" or similar legend to warn of the fall hazard. (*See* proposed § 1910.28(b)(8)(iii)). These signs provide warning to employees who are exposed to fall hazards in repair, service, and assembly pits.

Affected Public: Business or other for-profit.

Number of Respondents: 62,310.

Frequency: On occasion.

Average Time per Response: 3 minutes.

Estimated Total Burden Hours: 3,116 hours.

Estimated Costs (Operation and Maintenance): $0.

• For proposed 29 CFR part 1910, subpart I:

Type of Review: Revision of a currently approved collection.

Title: Personal Protective Equipment (PPE) for General Industry (29 CFR part 1910, subpart I).

OMB Control Number: 1218–0205.

Description and Proposed Use of the Collections of Information: The proposed standard would expand the burden of the currently approved information collection requirements (*see* 1218–0205) because the proposed standard would impose new information collection requirements for purposes of PRA–95. The two collection of information requirements in the proposed standard, described in the following paragraphs, have not been approved by OMB.

Paragraph (d) of existing § 1910.132 requires employers to conduct a hazard assessment of the workplace to determine if there are certain hazards from which employees can be protected through the use of PPE; namely eye and face, foot, head, and hand hazards. Under the proposal, this provision would be expanded to add fall hazards to the list of hazards covered by the workplace assessment, thus requiring employers to determine if there are any fall hazards from which employees can be protected by the use of fall protection PPE. This provision is necessary to protect workers from fall hazards.

Likewise, under existing § 1910.132(f), employers must provide training for each employee who was identified in the hazard assessment as needing to use fall protection. The proposed revision would expand the current requirement to include training employees who would be using fall protection PPE. Also, under existing § 1910.132(f)(3), employers must provide retaining when there is reason to believe that any previously trained employee does not have the understanding and skill to use PPE properly, and existing paragraph (f)(4) of § 1910.132 requires that employers certify that employees have received and understood the required PPE training. The training certification must include the name of the employee(s) trained, the date(s) of training, and the subject of the certification (i.e., a statement identifying the document as a certification of training in the use of PPE). The proposed revision would expand the certification record to include employees who have been trained in the use of PPE for fall protection.

The proposed revisions would result in the initial (first year) burden outlined below. After the first year, however, the burden will be significantly lower.

Affected Public: Business or other for-profit.

Number of Respondents: 1.3 million establishments.

Frequency: On occasion.

Average Time per Response: Ranges from three minutes to document and maintain training records, to four hours for larger establishments to do a hazard assessment to include identification of fall hazards.

Estimated Total Burden Hours: 5.1 million burden hours.

Estimated Costs (Operation and Maintenance): $0.

Submitting comments. Members of the public who wish to comment on the paperwork requirements in this proposal must send their written comments to the Office of Information and Regulatory Affairs, Attn: OSHA Desk Officer (RIN 1218–AB80), Office of Management and Budget, Room 10235, 725 17th Street NW., Washington, DC 20503. The Agency encourages commenters to also submit their comments on these paperwork requirements to the rulemaking docket (Docket Number OSHA–2007–0072), along with their comments on other parts of the proposed rule. For instructions on submitting these comments to the rulemaking docket, *see* the sections of this **Federal Register** notice titled **DATES** and **ADDRESSES.** Comments submitted in response to this notice are public records; therefore, OSHA cautions commenters about submitting personal information such as Social Security numbers and date of birth.

Docket and inquiries. To access the docket to read or download comments and other materials related to this paperwork determination, including the complete Information Collection Request (ICR) (containing the Supporting Statement with attachments describing the paperwork determinations in detail), use the procedures described under the section of this notice titled **ADDRESSES.** You also may obtain an electronic copy of the complete ICR by visiting the Web page at *http://www.reginfo.gov/public/do/PRAMain,* scroll under "Currently Under Review" to "Department of Labor (DOL)" to view all of the DOL's ICRs, including those ICRs submitted for proposed rulemakings. To make inquiries, or to request other information, contact Ms. Theda Kenney, Directorate of Standards and Guidance, OSHA, Room N–3609, U.S. Department of Labor, 200 Constitution Avenue, NW., Washington, DC 20210; telephone (202) 693–2222.

The Department notes that a Federal agency cannot conduct or sponsor a collection of information unless it is approved by OMB under the PRA and displays a currently valid OMB control number, and the public is not required to respond to a collection of information unless it displays a currently valid OMB control number. Also, not withstanding any other provisions of law, no person shall be subject to penalty for failing to comply with a collection of information if the collection of information does not display a currently valid OMB control number.

VIII. Federalism

OSHA reviewed this NPRM in accordance with the Executive Order on Federalism (Executive Order 13132, 64 FR 43255, August 10, 1999), which requires that Federal agencies, to the extent possible, refrain from limiting State policy options, consult with States prior to taking any actions that would restrict State policy options, and take such actions only when clear constitutional authority exists and the problem is national in scope. Executive Order 13132 provides for preemption of State law only with the expressed consent of Congress. Any such preemption must be limited to the extent possible.

Under section 18 of the Occupational Safety and Health Act of 1970 ("OSH Act"; U.S.C. 651 *et seq.*), Congress expressly provides that States may adopt, with Federal approval, a plan for the development and enforcement of occupational safety and health standards; States that obtain Federal approval for such a plan are referred to as "State-Plan States." (29 U.S.C. 667.) Occupational safety and health standards developed by State-Plan States must be at least as effective in providing safe and healthful employment and places of employment as the Federal standards. Subject to these requirements, State-Plan States are free to develop and enforce their own requirements for occupational safety and health standards.

While OSHA drafted this NPRM to protect employees in every State, section 18(c)(2) of the Act permits State-Plan States and Territories to develop and enforce their own standards for walking-working surfaces and personal fall protection provided these requirements are at least as effective in providing safe and healthful employment and places of employment as the final requirements that result from this proposal.

In summary, this NPRM complies with Executive Order 13132. In States without OSHA-approved State Plans, any standard developed from this proposal would limit State policy options in the same manner as every standard promulgated by OSHA. In States with OSHA-approved State Plans, this rulemaking would not significantly limit State policy options.

IX. State Plan States

Section 18(c)(2) of the Occupational Safety and Health Act of 1970 (29 U.S.C. 667(c)(2)) requires State-Plan States to adopt mandatory standards promulgated by OSHA. Accordingly, the 25 States and 2 Territories with their own OSHA-approved occupational safety and health plans would have to adopt provisions comparable to the provisions in this proposed rule within 6 months after the Agency publishes the final rule that it develops from this proposal. The Agency believes that the proposed rule would provide employers in State-Plan States and Territories with critical information and methods necessary to protect their employees from falls and other hazards associated with walking-working surfaces. The 25 States and 2 Territories with State Plans are: Alaska, Arizona, California, Hawaii, Indiana, Iowa, Kentucky, Maryland, Michigan, Minnesota, Nevada, New Mexico, North Carolina, Oregon, Puerto Rico, South Carolina, Tennessee, Utah, Vermont, Virginia, Washington, and Wyoming. Connecticut, Illinois, New Jersey, New York, and the Virgin Islands have OSHA-approved State Plans that apply to State and local government employees only. Until a State-Plan State/Territory promulgates its own comparable provisions based on the final rule developed from this proposal, Federal OSHA will provide the State/Territory with interim enforcement assistance, as appropriate.

X. Unfunded Mandates Reform Act

OSHA reviewed this proposed rule according to the Unfunded Mandates Reform Act of 1995 ("UMRA"; 2 U.S.C. 1501 *et seq.*) and Executive Order 12875 (58 FR 58093). As discussed above in section V. of this preamble ("Preliminary Economic Analysis and Initial Regulatory Flexibility Screening Analysis"), the Agency estimates that compliance with this proposed rule would require private-sector employers to expend about $159.2 million each year. However, while this proposed rule establishes a federal mandate in the private sector, it is not a significant regulatory action within the meaning of section 202 of the UMRA (2 U.S.C. 1532).

Under voluntary agreement with OSHA, some States enforce compliance with their State standards on public sector entities, and these agreements specify that these State standards must be equivalent to OSHA standards. Thus, although OSHA has included compliance costs for the affected public-sector entities in its analysis of the expected impacts associated with the proposal, the proposal would not involve any unfunded mandates being imposed on any State or local government entity. Consequently, this proposed rule does not meet the definition of a "Federal intergovernmental mandate" (*see* section 421(5) of the UMRA (2 U.S.C. 658(5))). Therefore, for the purposes of the UMRA, the Agency preliminarily certifies that this proposed rule does not mandate that State, local, and tribal governments adopt new, unfunded regulatory obligations.

XI. Public Participation

OSHA invites comments on all aspects of the proposed rule. Throughout this document OSHA has invited comment on specific issues and requested information and data about practices at establishments and industries affected by this proposal. OSHA will carefully review and evaluate these comments, information, and data, as well as all other information in the rulemaking record, to determine how to proceed.

Comments. The Agency invites interested parties to submit written data, views, and arguments concerning this proposal. In particular, the Agency welcomes comments on its determination of the economic or other regulatory impacts of the proposed rule on the regulated community. When submitting comments, follow the procedures specified above in the sections titled **DATES** and **ADDRESSES**. The comments must clearly identify the provision of the proposal being addressed, the position taken with respect to each issue, and the basis for that position. Comments, along with supporting data and references, received by the end of the specified comment period will become part of the proceedings record, and will be available electronically for public inspection at the Federal eRulemaking Portal (*http://www.regulations.gov*), or may be read at the OSHA Docket Office, Room N–2625, 200 Constitution Ave., NW., Washington. (*See* the section of this **Federal Register** notice titled **ADDRESSES** for additional information on how to access these documents.)

Informal Public Hearings. Requests for a hearing should be submitted to the Agency as set forth above under the sections of this notice titled **DATES** and **ADDRESSES**.

List of Subjects in 29 CFR Part 1910

Falls; Fall arrest; Fall protection; Fall restraint; Ladders; Occupational safety and health; Scaffolds; Stair; Walking-working surfaces; Window cleaning.

XII. Authority and Signature

This document was prepared under the authority of David Michaels, Assistant Secretary of Labor for Occupational Safety and Health, U.S. Department of Labor, 200 Constitution Avenue, NW., Washington, DC 20210.

Signed at Washington, DC, on April 29, 2010.

David Michaels,

Assistant Secretary of Labor for Occupational Safety and Health.

Proposed Regulatory Text

Pursuant to sections 4, 6, and 8 of the OSH Act of 1970 (29 U.S.C. 653, 655, 657), Secretary of Labor's Order No. 5–2007 (72 FR 31159), and 29 CFR part 1911, it is hereby amending subparts D and I of 29 CFR part 1910 as set forth below.

PART 1910—OCCUPATIONAL SAFETY AND HEALTH STANDARDS

1. Subpart D is revised to read as follows:

Subpart D—Walking-Working Surfaces

Sec.
1910.21 Scope, application, and definitions.
1910.22 General requirements.
1910.23 Ladders.
1910.24 Step bolts and manhole steps.
1910.25 Stairways.
1910.26 Dockboards (bridge plates).
1910.27 Scaffolds (including rope descent systems).
1910.28 Duty to have fall protection.
1910.29 Fall protection systems criteria and practices.
1910.30 Training requirements.

Authority: Secs. 4, 6, and 8 of the Occupational Safety and Health Act of 1970 (29 U.S.C. 653, 655, 657), Secretary of Labor's Order No. 12–71 (36 FR 8754), 8–76 (41 FR 25059), and 9–83 (48 FR 35736), 1–90 (55 FR 9033), 5–2002 (67 FR 65008), or 5–2007 (72 FR 31159), as applicable. Subpart D is also issued under 29 CFR part 1911.

Subpart D—Walking-Working Surfaces

§ 1910.21 Scope, application and definitions.

(a) *Scope and application.* This subpart applies to all general industry workplaces. It covers all walking-working surfaces unless specifically excluded by individual sections of this subpart.

(b) *Definitions.*

Alternating tread-type stair means a series of steps (treads) usually attached to a center support in an alternating manner so that a user of the stair normally does not have both feet on the same level.

Authorized describes an employee who is approved or assigned by the employer to perform a specific type of duty or an employee who is permitted by the employer to be at a specific location.

Cage means a barrier mounted on the side rail of a fixed ladder or fastened to the structure behind the fixed ladder and which is designed to enclose the climbing space of the ladder to safeguard the employee while climbing the ladder. A cage may also be called a "cage guard" or "basket guard."

Carrier means a track of a ladder safety system consisting of a flexible cable or rigid rail which is secured to the ladder or structure by mountings.

Combination ladder means a portable ladder that can be used as a stepladder, single extension ladder, trestle ladder, or stairwell ladder. Its components may be used as a single ladder.

Designated area means a distinct portion of a walking-working surface delineated by a perimeter warning line in which temporary work may be performed without additional fall protection.

Dockboard (bridge plate) means a portable or fixed device for spanning the gap or compensating for the difference in level between loading platforms and carriers.

Equivalent means alternate designs, materials, or methods that the employer can demonstrate will provide an equal or greater degree of safety for employees compared to the method or item specified in this subpart.

Extension ladder means a non-self-supporting portable ladder adjustable in length.

Failure means a load refusal, breakage, or separation of component parts. Load refusal is the point where the ultimate strength is exceeded.

Fall hazard means any condition on a walking-working surface that exposes an employee to injury from a fall on the same level or to a lower level.

Fall protection means any equipment, device, or system that prevents an employee from experiencing a fall from elevation or that mitigates the effect of such a fall.

Fixed ladder means a ladder, including an individual rung ladder, which is permanently attached to a structure, building, or equipment. It does not include ship stairs or manhole steps.

Grab bars means individual handholds placed adjacent to or as an extension of ladder side rails for the purpose of providing access beyond the limits of the ladder.

Guardrail system means a barrier erected to prevent employees from falling to lower levels.

Handrail means a rail used to provide employees a handhold for support.

Hoist area means any elevated access opening to a walking-working surface where hoisted equipment or materials are loaded or received.

Hole means a gap or void 2 inches (5 cm) or more in its least dimension, in a floor, roof, or other walking-working surface.

Individual rung ladder means a ladder consisting of rungs individually attached to a structure, building, or piece of equipment. It does not include manhole steps.

Ladder means a device with rungs, steps, or cleats typically used to gain access to a different elevation.

Ladder safety system means a device, other than a cage or well, designed to eliminate or reduce the possibility of falls from ladders. A ladder safety system usually consists of a carrier (the track of flexible cable or rigid rail), safety sleeve (moving component which travels on the carrier), lanyard, connectors, and body belt or harness.

Ladder stand (*see* "Mobile ladder stand").

Lower level means an area to which an employee could fall. Such areas include ground levels, floors, roofs, ramps, runways, excavations, pits, tanks, materials, water, equipment, and similar surfaces.

Manhole steps means steps individually attached or set into the walls of a manhole structure.

Maximum intended load (designed working load) means the total load of all employees, equipment, tools, materials, transmitted loads, and other loads reasonably anticipated to be applied to a walking-working surface.

Mobile means manually propelled and/or movable.

Mobile ladder stand (ladder stand) means a mobile, fixed-size, self-supporting ladder consisting of flat treads in the form of steps accessing a top step. The assembly may include handrails and is intended for use by one employee.

Mobile ladder stand platform means a mobile, fixed-height, self-supporting unit having one or more standing levels, provided with means of access or egress to the platform or platforms.

Open riser means the gap between the treads of stairways without upright members (risers).

Opening means a gap or void 30 inches (76 cm) or more high and 18 inches (46 cm) or more wide in any wall or partition through which employees can fall to a lower level.

Platform means a walking-working surface elevated above the surrounding area.

Portable ladder means a ladder that can readily be moved or carried and usually consists of side rails joined at intervals by steps, rungs, cleats, or rear braces.

Qualified describes a person who, by possession of a recognized degree, certificate, or professional standing, or who by extensive knowledge, training, and experience has successfully

demonstrated the ability to solve or resolve problems relating to the subject matter, the work, or the project.

Qualified climber means an employee engaged in outdoor advertising who, by virtue of physical capabilities, training, work experience, and job assignment, is authorized by the employer to climb fixed ladders without using fall protection.

Ramp means an inclined surface between different elevations that is used for the passage of employees, vehicles, or both.

Riser means the upright member of a step situated at the back of a lower tread and near the leading edge of the next higher tread.

Rope descent system means a suspension device that supports one employee in a chair (seat board) and allows the user to descend in a controlled manner and to stop at any time at a desired level of descent. A rope descent system is a variation of the single-point adjustable suspension scaffold. Also known as a controlled descent device, controlled descent equipment, or controlled descent apparatus.

Rung, step, or cleat means, when used on a ladder, a cross-piece on which a person may step to ascend or descend.

Runway means a passageway for persons, elevated above the surrounding floor or ground level, such as a catwalk, a foot walk along shafting, or a walkway between buildings.

Safety factor means the ratio of the design load and the ultimate strength of the material.

Scaffold means any temporary elevated or suspended platform, and its supporting structure, including points of anchorage, used to support employees or materials or both. The term "scaffold" does not include crane or derrick suspended personnel platforms.

Ship stairs (ship ladders) means a stairway that is equipped with treads and stair rails, has a slope between 50 and 70 degrees from the horizontal, and has open risers.

Side-step ladder means a ladder from which an employee getting off at the top must step sideways from the ladder to reach the landing.

Single-point adjustable suspension scaffold means a suspension scaffold consisting of a platform suspended by a single rope from an overhead support and equipped with means to permit the movement of the platform to desired work levels.

Spiral stairway means a stairway having a helical (spiral) structure attached to a supporting pole.

Stair rail or *stair rail system* means a vertical barrier (such as rails, decorative panels, and mesh) erected along open sides of stairways to prevent employees from falling to lower levels. The top surface of a stair rail system may also be a handrail.

Standard stairs means a permanently installed stairway. Ship stairs, spiral stairs, and alternating tread-type stairs are not standard stairs.

Stepladder means a self-supporting portable ladder, non-adjustable in length, with flat steps and a hinged back.

Step-bolt (pole step) means a bolt or rung attached at intervals along a structural member and used for foot placement during climbing or standing.

Stepstool means a self-supporting, foldable, portable ladder, nonadjustable in length, 32 inches (81 cm) or less in overall size, with flat steps and without a pail shelf, designed so that the ladder top cap, as well as all steps, can be climbed on. The side rails may continue above the top cap.

Through ladder means a type of fixed ladder designed to allow a person to get off at the top by stepping through the ladder to reach a landing.

Tieback means an attachment from an anchorage (e.g., structural member) to a supporting device.

Toeboard means a low protective barrier that is designed to prevent the fall of materials and equipment to lower levels and provide protection from falls for employees.

Tread means the horizontal member of a step.

Unprotected sides and edges means any side or edge of a walking-working surface (except at entrances to points of access) where there is no wall or guardrail system at least 39 inches (99 cm) high.

Walking-working surface means any surface horizontal or vertical, on or through which an employee walks, works, or gains access to a workplace location. Walking-working surfaces include, but are not limited to, floors, stairs, steps, roofs, ladders, ramps, runways, aisles, and step bolts.

Well means a permanent, complete enclosure around a fixed ladder. Proper clearances for a well provide the person climbing the ladder the same protection as a cage.

§ 1910.22 General requirements.

(a) *Surface conditions.* (1) All places of employment, passageways, storerooms, and service rooms shall be kept clean and orderly, and in a sanitary condition.

(2) The floor of every workroom shall be maintained in a clean and, so far as possible, a dry condition. Where wet processes are used, drainage shall be maintained and false floors, platforms, mats, or other dry standing places shall be provided where practicable.

(3) Employers must ensure that all surfaces are designed, constructed, and maintained free of recognized hazards that can result in injury or death to employees.

(b) *Application of loads.* Employers must ensure that walking-working surfaces are:

(1) Designed, constructed, and maintained to support their maximum intended load; and

(2) Not loaded beyond their maximum intended load.

(c) *Access and egress.* The employer must ensure employees are provided with and use a safe means of access to and egress from one walking-working surface to another.

(d) *Maintenance and repair.* (1) The employer must ensure through regular and periodic inspection and maintenance that walking-working surfaces are in a safe condition for employee use.

(2) The employer must ensure that all hazardous conditions are promptly corrected or repaired. If the repair can not be made immediately, the hazard must be guarded to prevent employee use.

(3) Where hazardous conditions may affect the structural integrity of the walking-working surface, a qualified person must perform or supervise the maintenance or repair of that surface.

§ 1910.23 Ladders.

(a) *Application.* This section covers all ladders, except those used only for firefighting or rescue operations and ladders that are designed into (an integral part of) a machine or piece of equipment.

(b) *General requirements for all ladders.* (1) Ladder rungs and steps must be parallel, level, and uniformly spaced when the ladder is in position for use.

(2) Rungs, cleats, and steps of ladders must be spaced not less than 10 inches (25 cm) nor more than 14 inches (36 cm) apart, as measured between the center lines of the rungs, cleats, and steps, except that:

(i) Rungs and steps on ladders in elevator shafts must be spaced no less than 6 inches (15 cm) apart, nor more than 16.5 inches (42 cm) apart, as measured along the ladder side rails; and

(ii) Rungs and steps on fixed ladders on telecommunication towers must be installed no more than 18 inches (46 cm) apart.

(3) Rungs, cleats, and steps of stepstools must be not less than 8 inches

(20 cm) apart, nor more than 12 inches (30 cm) apart, as measured between the center lines of the rungs, cleats, and steps.

(4) Except as provided below, ladder rungs and steps must have a minimum clear width of 11.5 inches (29 cm) for portable ladders and 16 inches (41 cm) for individual rung and fixed ladders.

(i) Narrow rungs that are not designed to be stepped on, such as those located on the tapered end of fruit pickers' ladders and similar ladders, are exempt from the minimum rung width requirement.

(ii) Manhole entry ladders that are supported by manhole openings must have rungs or steps that have a clear width of at least 9 inches (23 cm).

(iii) Rolling ladders used in telecommunication centers must have a clear width of at least 8 inches (20 cm).

Note to paragraph (b)(4) of this section: When ladder safety systems meeting the requirements of § 1910.29 are used on fixed or individual-rung ladders, the clear width is measured before the installation of the ladder safety system.

(5) Wooden ladders must not be coated or covered with any material that may obscure structural defects.

(6) Metal ladders must be protected against corrosion.

(7) Ladder surfaces must be free of puncture or laceration hazards.

(8) Ladders must be used only for the purposes for which they were designed.

(9) Ladders must be inspected before use to identify any visible defects that could cause employee injury.

(10) Ladders with structural or other defects must immediately be tagged "Do Not Use" or with similar language in accordance with § 1910.145 and must be removed from service until repaired in accordance with § 1910.22(d), or replaced.

(11) Employers shall ensure that, when ascending or descending a ladder, employees face the ladder.

(12) Employers shall ensure that employees use at least one hand to grasp the ladder when progressing up and down the ladder.

(13) Employers shall ensure that employees do not carry any object or load that could cause employees to lose balance and fall.

(c) *Portable ladders.* (1) Rungs and steps of portable metal ladders must be corrugated, knurled, dimpled, coated with skid-resistant material, or otherwise treated to minimize the possibility of slipping.

(2) Each stepladder or any combination ladder that is used in a stepladder mode must be designed with a metal spreader or locking device to hold the front and back sections securely in an open position while in use.

(3) Ladders must not be loaded beyond the maximum intended load for which they were designed and tested, or beyond the manufacturer's rated capacity. The maximum intended load, as defined in § 1910.21(b), includes the worker and all tools and supplies carried.

(4) Ladders must be used only on stable and level surfaces unless secured or stabilized to prevent accidental displacement.

(5) The use of portable single rail ladders is prohibited.

(6) Ladders must not be moved, shifted, or extended while occupied by an employee.

(7) Ladders placed in any location where they can be displaced by other activities or by traffic, such as ladders used in passageways, doorways, or driveways, must be secured to prevent accidental displacement unless a temporary barricade, such as a row of traffic cones, is used to keep the activities or traffic away from the ladder.

(8) The top of a stepladder must not be used as a step.

(9) A non-self-supporting ladder must not be used on slippery surfaces unless it is secured and stabilized.

(10) The top of a non-self-supporting ladder must be placed with the two rails supported unless it is equipped with a single support attachment.

(11) When portable ladders are used to gain access to an upper landing surface, the ladder siderails must extend at least 3 feet (0.9 m) above that upper landing surface. (*See* Figure D–1.)

(12) When work is performed on or near electrical circuits, the requirements of § 1910.333(c) apply.

(13) Ladders and ladder sections must not be tied or fastened together to provide longer length unless they are specifically designed for such use.

(14) The reach of ladders and ladder sections must not be increased by any means unless the equipment is specifically designed for the application.

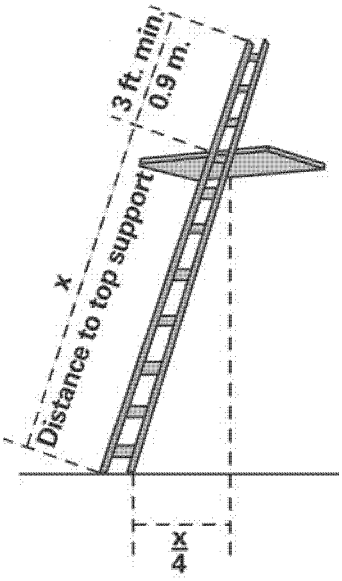

Figure D-1 -- Portable Ladder Set-up

(d) *Fixed ladders.* (1) Fixed ladders must be capable of supporting their maximum intended load.

(2) Fixed ladders installed on or after (*date 90 days after the effective date of the final rule*) must be designed, constructed, and maintained as follows:

(i) Fixed ladders must be capable of supporting two live loads of at least 250 pounds (113 kg) each, concentrated between any two consecutive attachments, plus anticipated loads caused by ice buildup, winds, rigging, and impact loads resulting from the use of ladder safety systems. The number and position of additional concentrated live loads of 250 pounds (113 kg) each, determined from anticipated usage of the ladder, must also be included in determining the capabilities of fixed ladders.

(ii) Each step or rung must be capable of supporting at least a single concentrated load of 250 pounds (113 kg) applied in the middle of the step or rung.

(3) The minimum perpendicular clearance from the centerline of the steps and rungs, or grab bars, or both, to the nearest permanent object in back of the ladder must be 7 inches (18 cm), except in the case of an elevator pit ladder, for which a minimum perpendicular clearance of 4.5 inches (11 cm) is required. Grab bars must not protrude on the climbing side beyond the rungs of the ladder which they serve.

(4) The side rails of through or side-step ladders must extend 42 inches (1.1 m) above the top of the access level or landing platform served by the ladder. For a parapet ladder, the access level must be the roof if the parapet is cut to permit passage through the parapet; if the parapet is continuous, the access level must be the top of the parapet.

(5) For through ladder extensions, the steps or rungs must be omitted from the extension and the extension of the side rails must be flared to provide not less than 24 inches (61 cm) nor more than 30 inches (76 cm) clearance between side rails. Where ladder safety systems are provided, the maximum clearance between side rails of the extensions must not exceed 36 inches (91 cm).

(6) For side-step ladders, the side rails and the steps or rungs must be continuous in the extension. (*See* Figure D–2.)

(7) Grab bars must extend 42 inches (1.1 m) above the access and egress levels or landing platforms served by the ladder.

(8) The minimum size (cross-section) of the grab bars must be the same as the rungs of the ladder.

(9) Where a fixed ladder terminates at a hatch (*see* Figure D–3), the hatch cover must:

(i) Open with sufficient clearance for the employee to permit easy access to or egress from the ladder; and

(ii) Open at least 70 degrees from the horizontal, if counterbalanced.

(10) Fixed individual rung ladders must be constructed to prevent the employee's feet from sliding off the end. (*See* Figure D–4.)

(11) The use of fixed ladders having a pitch greater than 90 degrees from the horizontal is prohibited.

(12) The step-across distance from the centerline of the steps or rungs of a fixed ladder must:

(i) Not be less than 7 inches (18 cm) nor more than 12 inches (30 cm) to the nearest edge of the structure, building, or equipment accessed from through ladders.

(ii) Not be less than 15 inches (38 cm) nor more than 20 inches (51 cm) to the access and egress points of the platform edge for side-step ladders.

(13) Fixed ladders without cages or wells must have:

(i) A clear width of at least 15 inches (38 cm) to the nearest permanent object on each side of the centerline of the ladder. (*See* Figure D–2.)

(ii) A minimum perpendicular distance of 30 inches (76 cm) from the center line of the steps and rungs to the nearest object on the climbing side except when unavoidable obstructions are encountered, then the minimum clearance may be reduced to 24 inches (61 cm) provided deflector plates are installed. (*See* Figure D–5.)

Note to paragraph (d) of this section: The duty to provide fall protection for employees working on fixed ladders is found at § 1910.28 and the criteria for such fall protection systems is found at § 1910.29.

BILLING CODE 4510–29–P

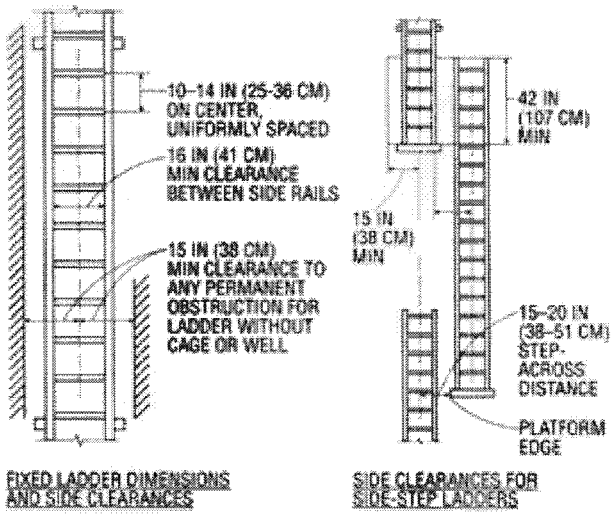

Figure D-2 -- Side-Step Fixed Ladder Sections

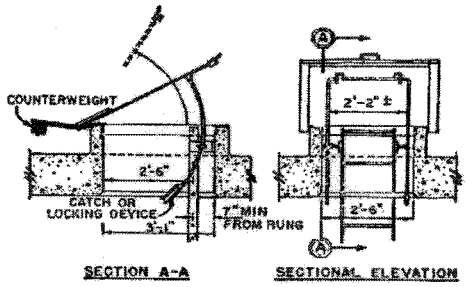

Figure D-3 -- Counterbalanced Hatch Cover at Roof

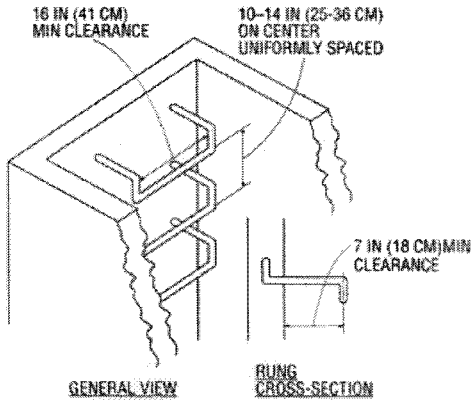

Figure D-4 -- Individual Rung Ladder

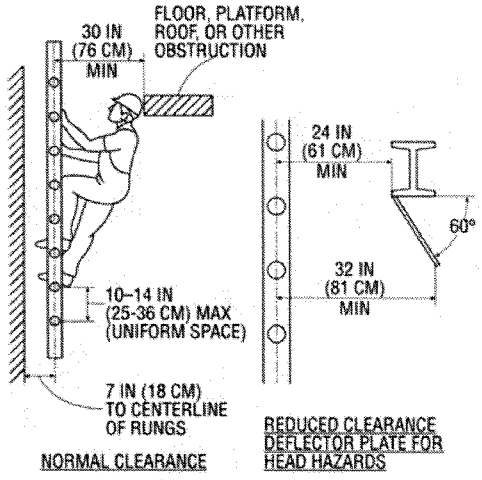

Figure D-5 -- Fixed Ladder Clearances

BILLING CODE 4510–29–C

(e) *Mobile ladder stands and mobile ladder stand platforms (Mobile ladder stands and platforms)*—(1) *General design requirements.* (i) Mobile ladder stands and platforms must have a step width of at least 16 inches (41 cm).

(ii) The steps, standing levels, and platforms of mobile ladder stands and platforms must be provided with a slip resistant surface. This surface may be an integral part of the surface or be provided by a secondary process or operation, e.g., dimpling, knurling, shotblasting, coating, metal spraying, or slip resistant tapes that must be durable in nature.

(iii) Wheels or casters, when under load, must be designed to support their proportional share of four times the rated load, plus the proportional share of the unit's weight.

(iv) Mobile ladder stands and platforms that use wheels or casters, rigid and swivel, must be equipped with a system to impede horizontal movement.

(v) The maximum work surface heights of mobile ladder stands and platforms must not exceed four times the least base dimension without additional support. When greater heights are needed, outriggers, counterweights, or comparable means must be used to maintain this minimum base ratio.

(vi) Mobile ladder stands and platforms must be capable of supporting at least four times their intended load.

(vii) Occupied mobile ladder stands and platforms must not be moved.

(2) *Design requirements for mobile ladder stands.* (i) Steps must be uniformly spaced and arranged with a rise of not more than 10 inches (25 cm), and a depth of not less than 7 inches (18 cm). The slope of the step stringer (inclined side support) to which the steps are attached must not be more than 60 degrees measured from the horizontal.

(ii) All ladder stands with a top step height of 4 to 10 feet (1.2 m to 3 m) must be provided with handrails having a vertical height of 29.5 inches (75 cm) to 37 inches (94 cm) measured from the front edge of a step. The use of removable gates or non-rigid members such as chains may be permitted for special use applications.

(iii) All ladder stands with a top step over 10 feet high (3 m) must have the top step protected on three sides by a handrail with a vertical height of at least 36 inches (91 cm). The use of removable gates or non-rigid members such as chains may be permitted for special use applications. Top steps that are 20 inches (51 cm) or more, front to back, must be provided with a midrail and toeboard.

(iv) The standing areas of mobile ladder stands must be within the base frame.

(3) *Design requirements for mobile ladder stand platforms.* (i) Steps of a ladder stand platform must conform to paragraph (e)(2)(i) of this section. However, when the employer demonstrates that compliance with paragraph (e)(3)(i) is not practicable, steeper slopes or vertical rung ladders may be used, provided the units are stabilized to prevent overturning.

(ii) All ladder stand platforms with a platform height of 4 to 10 feet (1.2 m to 3 m) must be provided with handrails having a vertical height of 29.5 inches (75 cm) to 37 inches (94 cm) measured from the front edge of a step. Handrails in the platform area above the flat surface must have a vertical height of at least 36 inches (91 cm) and include a midrail. The use of removable gates or non-rigid members such as chains may be permitted for special use applications.

(iii) All ladder stand platforms with a platform height of over 10 feet (3 m) high must have guardrails and toeboards meeting the requirements of § 1910.29 on the exposed sides and ends of the platform. The use of removable gates or non-rigid members such as chains may be permitted for special use applications.

§ 1910.24 Step bolts and manhole steps.

(a) *Step bolts.* (1) All step bolts installed on or after (date 90 days after the effective date of the final rule) that are used in corrosive environments must be constructed of, or coated with, a material that will retard corrosion of the step bolt.

(2) Step bolts must be designed to prevent the employee's foot from slipping or sliding off the end of the step bolt.

(3) Step bolts must be spaced uniformly, 12 inches (30 cm) minimum center to center, alternately spaced, 18 inches (46 cm) maximum. (*See* Figure D–6.) The spacing from the entry and exit surface to the first step bolt may be different from the spacing between the other step bolts.

(4) The minimum clear width of each step bolt must be 4.5 inches (11 cm).

(5) The minimum perpendicular distance between the centerline of the step bolt to the nearest permanent object in back of the bolt must be at least 7 inches (18 cm). Where obstructions cannot be avoided, toe clearances may be reduced to 4.5 inches (11 cm).

(6) Step bolts installed before (date 90 days after the effective date of the final

rule) must be capable of supporting their maximum intended load.

(7) Each step bolt installed on or after (date 90 days after the effective date of the final rule) must be capable of supporting, without failure, at least four times its maximum intended load.

(8) Step bolts must be visually inspected before each use and be maintained in accordance with § 1910.22.

(9) Step bolts that are bent more than 15 degrees from the perpendicular (regardless of direction) must be removed and replaced with bolts that meet the requirements of this section.

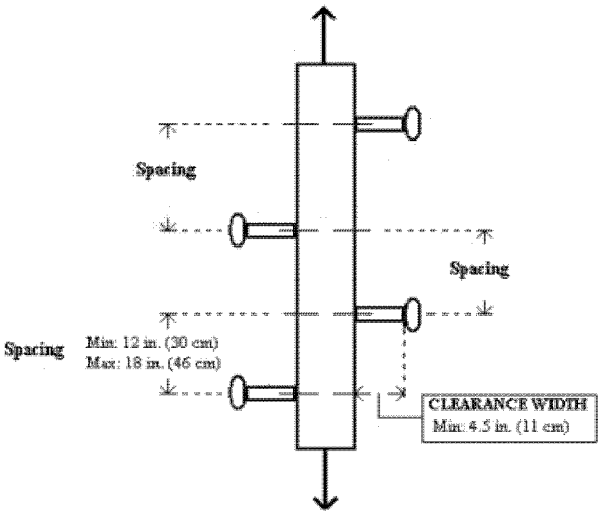

Figure D-6 – Step Bolt Spacing

(b) *Manhole steps.* (1) Manhole steps installed before (date 90 days after the effective date of the final rule) must be capable of supporting their maximum intended load.

(2) The employer must ensure that manhole steps installed on or after (date 90 days after the effective date of the final rule):

(i) Are provided with slip-resistant surfaces such as, corrugated, knurled, or dimpled surfaces;

(ii) Are constructed of, or coated with, a material that will retard corrosion of the step if used in corrosive environments;

(iii) Have a minimum clear step width of 10 inches (25 cm);

(iv) Are spaced uniformly, not more than 16 inches (41 cm) apart;

Exception to paragraph (b)(2)(iv) of this section: The spacing from the entry and exit surface to the first manhole step may be different from the spacing between the other steps.

(v) Have a minimum perpendicular distance between the centerline of the manhole step to the nearest permanent object in back of the step of at least 4.5 inches (11 cm); and

(vi) Are designed to prevent the employee's foot from slipping or sliding off the end of the manhole step.

(3) Manhole steps must be visually inspected before each use and be maintained in accordance with § 1910.22.

§ 1910.25 Stairways.

(a) *General requirements.* (1) This section covers all stairs including standard stairs, spiral stairs, ship stairs, and alternating tread-type stairs. This section does not cover: Stairs serving floating roof tanks; stairs on scaffolds; stairs designed into a machine or piece of equipment; or stairs on self-propelled motorized mobile equipment.

(2) Handrails and stair rail systems must be provided as required in § 1910.28.

Note to paragraph (a)(2) of this section: The top rail of a stair rail system may also serve as a handrail when installed in accordance with § 1910.29(f).

(3) Except as required in paragraph (c)(3) of this section, vertical clearance above any stair tread to an overhead obstruction must be at least 6 feet, 8 inches (2.1 m) measured from the leading edge of the tread.

(4) Stairs must be installed with uniform riser heights and tread depths between landings.

(5) Stairway landings and platforms must be no less than the width of the stair and not less than 30 inches (76 cm) in length as measured in the direction of travel.

(6) When a door or a gate opens directly on a stairway, a platform must be provided, and the swing of the door or gate must not reduce the effective usable depth to less than 20 inches (51 cm) for platforms installed before (date 90 days after the effective date of the final rule) and 22 inches (56 cm) for platforms installed on or after (date 90 days after the effective date of the final rule). (*See* Figure D–7.)

(7) Stairs must be designed and constructed to carry five times the normal anticipated live load, but never less than a concentrated load of 1,000 pounds (454 kg) applied at any point.

(8) Standard stairs must be provided for access from one walking-working surface to another where operations necessitate regular and routine travel between levels and for access to operating platforms for equipment. However, winding stairways may be installed on tanks and similar round structures when the diameter of the structure is five (5) feet (1.5 m) or more.

(9) Spiral stairs, ship stairs, or alternating tread-type stairs are not permitted except for special limited usage and secondary access situations when the employer can demonstrate it is not practical to provide a standard stairway.

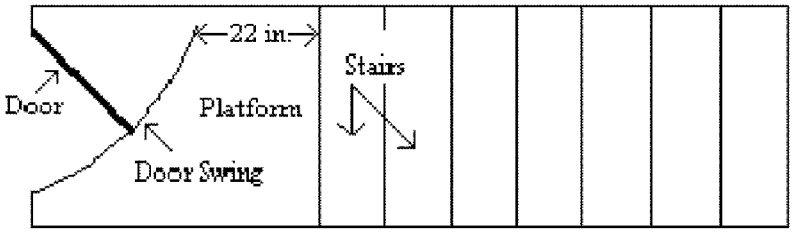

Figure D-7 - Door or Gate Opening on Stairway

(b) *Standard stairs.* In addition to paragraph (a) of this section, standard stairs must:

(1) Be installed at angles between 30 and 50 degrees from the horizontal;

(2) Have a maximum riser height of 9.5 inches (24 cm);

(3) Have a minimum tread depth of 9.5 inches (24 cm), except when open risers are used; and

(4) Have a minimum width of 22 inches (56 cm) between vertical barriers.

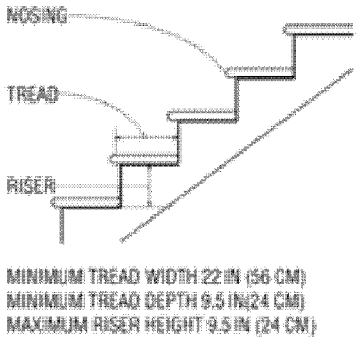

Figure D-8 -- Dimensions of Standard Stairs

(c) *Spiral stairways.* In addition to paragraph (a) of this section, spiral stairways must have:

(1) A clear width not less than 26 inches (66 cm);

(2) Risers with a maximum height of 9.5 inches (24 cm);

(3) A minimum headroom above the spiral stairway of 6 feet, 6 inches (2 m) measured vertically from the center of the leading edge of the tread;

(4) Treads with a minimum depth of 7.5 inches (19 cm) at a point 12 inches (30 cm) from the narrowest edge; and

(5) Uniform size treads.

(d) *Ship stairs.* In addition to paragraph (a) of this section, ship stairs must:

(1) Be installed at a slope of 50 to 70 degrees from the horizontal;

(2) Have open risers; and

(3) Have treads with a minimum depth of 4 inches (10 cm), a minimum width of 18 inches (46 cm), and a vertical rise between tread surfaces in the range of 6.5 to 12 inches (17 to 30 cm).

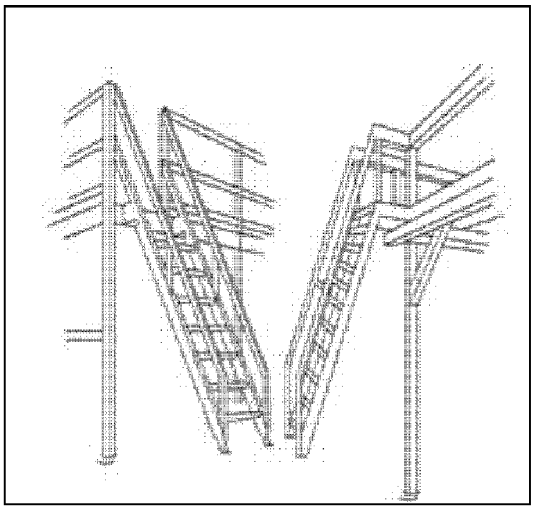

Figure D-9 -- Ship Stairs

(e) *Alternating tread-type stairs.* In addition to paragraph (a) of this section, alternating tread-type stairs must have:

(1) A series of steps installed at a slope between 50 and 70 degrees from the horizontal;

(2) A distance of 20 to 24 inches (51 to 61 cm) between the handrails;

(3) Treads with a minimum depth of 8.5 inches (22 cm);

(4) Open risers if the depth is less than 9.5 (24 cm) inches; and

(5) Treads that are a minimum of 7 inches (18 cm) wide at the nosing (i.e., leading edge of a tread).

§ 1910.26 Dockboards (bridge plates).

(a) Portable and powered dockboards must be capable of supporting their maximum intended load.

(b) Dockboards put into service on or after (date 90 days after the effective date of the final rule) must be designed, constructed, and maintained to prevent equipment from running off the edge.

(c) Portable dockboards must be secured in position by anchoring or equipping them with devices which will prevent their slipping. Where this is infeasible, the employer must ensure there is substantial contact between the portable dockboard and the unattached surface or surfaces.

(d) Vehicles onto which a dockboard has been placed must be prevented from moving (*e.g.,* using wheel chocks or sand shoes) while the dockboard is being used by employees.

(e) Portable dockboards must be equipped with handholds or other means to permit safe handling.

§ 1910.27 Scaffolds (including rope descent systems).

(a) *Scaffolds.* Scaffolds, other than rope descent systems, used in general industry must meet the requirements for scaffolds in part 1926 (Safety and Health Regulations for Construction) of this chapter.

(b) *Rope descent systems.* (1) The use of a rope descent system is prohibited for heights greater than 300 feet (91 m) above grade unless the employer can demonstrate that access cannot otherwise be attained safely and practicably.

(2) When rope descent systems are used, employers must:

(i) Use equipment in accordance with the instructions, warnings, and design limitations set by manufacturers and distributors.

(ii) Train employees in accordance with § 1910.30;

(iii) Inspect all equipment used in rope descent systems each day before use and remove damaged equipment from service;

(iv) Use proper rigging, including sound anchorages and tiebacks, with particular emphasis on providing tiebacks when counterweights, cornice hooks, or similar non-permanent anchorages are used;

(v) Use a separate, independent personal fall arrest system meeting the requirements of subpart I of this part;

(vi) Ensure that all lines are capable of sustaining a minimum tensile load of 5,000 pounds (2,268 kg);

(vii) Provide for prompt rescue of employees in the event of a fall;

(viii) Ensure ropes are effectively padded where they contact edges of the building, anchorage, obstructions, or other surfaces which might cut or weaken the rope;

(ix) Provide for stabilization at the specific work location when descents are greater than 130 feet (39.6 m);

(x) Secure equipment, such as tools, squeegees, or buckets by a tool lanyard or similar method to prevent equipment from falling; and,

(xi) Protect suspension ropes from exposure to open flames, hot work, corrosive chemicals, or other destructive conditions.

§ 1910.28 Duty to have fall protection.

(a) *General.* (1) This section sets requirements for employers to provide fall protection. All fall protection required by this section must conform to the criteria set forth in § 1910.29, except that personal fall protection systems (for example, personal fall arrest systems, restraint systems, and positioning device systems) must conform to the criteria set forth in subpart I of this part. This section does not apply to: Fall hazards presented by the exposed perimeters of entertainment stages or rail station platforms. Additionally, this section does not apply to powered platforms covered by § 1910.66(j), aerial lifts covered by § 1910.67(c)(2)(v), the portion of telecommunications work covered by § 1910.268(n)(7) and (n)(8), or the portion of electric power generation, transmission, and distribution work covered by § 1910.269(g)(2)(v).

(2) The employer must ensure that the walking-working surfaces used by its employees have the strength and structural integrity to support them safely, before allowing employees to work on those surfaces.

(b) *Protection from fall hazards*—(1) *Unprotected sides and edges.* The employer shall ensure that each employee on a walking-working surface (horizontal and vertical) with an unprotected side or edge which is 4 feet (1.2 m) or more above a lower level is protected from falling by the use of one or more of the following:

(i) Guardrail systems meeting the requirements of § 1910.29 of this subpart;

(ii) Designated area meeting the requirements of § 1910.29 of this subpart;

(iii) Safety net systems meeting the requirements part 1926 of this chapter;

(iv) Travel restraint systems meeting the requirements of subpart I of this part; or,

(v) Personal fall arrest systems meeting the requirements of subpart I of this part.

(vi) When the employer demonstrates that use of guardrails on the "working side" of platforms used in slaughtering facilities, or at loading racks, loading docks, or teeming platforms, is infeasible, the work may be done without guardrails provided:

(A) The work operation for which guardrails are infeasible is in process;

(B) Access to the platform is limited to authorized employees; and,

(C) The authorized employees have been trained in accordance with § 1910.30.

(2) *Hoist areas.* (i) Each employee in a hoist area must be protected from falling 4 feet (1.2 m) or more to lower levels by a guardrail system meeting the requirements of § 1910.29 of this subpart; or a personal fall arrest system or a travel restraint system meeting the requirements of subpart I of this part.

(ii) If guardrail systems, chains, gates, or portions thereof, are removed to facilitate the hoisting operation (*e.g.,* during landing of materials), and an employee must lean through the access opening or out over the edge of the access opening (for example, to receive or guide equipment and materials), that employee must be protected from fall hazards by a personal fall arrest system meeting the requirements of subpart I of this part. In addition, a grab handle must be provided on each side of the opening.

(3) *Holes.* (i) Each employee on walking-working surfaces must be protected from falling through holes (including skylights) more than 4 feet (1.2 m) above lower levels by:

(A) Covers meeting the requirements of § 1910.29 of this subpart;

(B) A guardrail system meeting the requirements of § 1910.29 of this subpart;

(C) A travel restraint system meeting the requirements of subpart I of this part; or,

(D) A personal fall arrest system meeting the requirements of subpart I of this part.

(ii) Each employee on a walking-working surface must be protected from tripping in or stepping into or through holes by covers meeting the requirements of § 1910.29 of this subpart.

(iii) Each employee on a walking-working surface must be protected from objects falling through overhead holes by covers meeting the requirements of § 1910.29 of this subpart.

(4) *Dockboards (bridge plates).* (i) Each employee on a dockboard must be protected from falling 4 feet (1.2 m) or more to lower levels by a guardrail or handrail system, except as provided by (b)(4)(ii) of this section.

(ii) Fall protection (guardrail or handrail systems) is not required when:

(A) Dockboards are being used solely for materials handling operations with motorized equipment;

(B) Employees engaged in those operations are exposed to fall hazards of 10 feet (3 m) or less; and

(C) Those employees have been trained, in accordance with § 1910.30, to recognize and avoid the hazards associated with this work. Training must include instruction in the proper placement and securing of dockboards, securing of vehicles, and the proper use of materials handling equipment.

(5) *Runways and similar walkways.* (i) Each employee on a runway or similar walkway must be protected from falling 4 feet (1.2 m) or more to lower levels by a guardrail system. Wherever tools, machine parts or objects are likely to be used on the runway, a toeboard must also be provided along each exposed side.

(ii) Runways used exclusively for special purposes may have the railing on one side omitted when the employer demonstrates that operating conditions necessitate such an omission, provided the employer minimizes the fall hazard by providing a runway that is at least 18 inches (46 cm) wide, and providing employees with, and ensuring the proper use of, personal fall arrest systems or travel restraint systems meeting the requirements of subpart I of this part.

(6) *Dangerous equipment.* (i) Each employee less than 4 feet (1.2 m) above dangerous equipment must be protected from falling into or onto the dangerous equipment by a guardrail or a travel restraint system unless the equipment is covered or guarded to eliminate the hazard.

(ii) Each employee 4 feet (1.2 m) or more above dangerous equipment must be protected from fall hazards by:

(A) A guardrail system meeting the requirements of § 1910.29 of this subpart;

(B) A safety net system meeting the requirements part 1926 of this chapter;

(C) A travel restraint system meeting the requirements of subpart I of this part; or

(D) A personal fall arrest system meeting the requirements of subpart I of this part.

(7) *Wall openings.* Each employee working on, at, above, or near wall openings (including those with chutes attached) where the outside bottom edge of the wall opening is 4 feet (1.2 m) or more above lower levels and the inside bottom edge of the wall opening is less than 39 inches (99 cm) above the walking-working surface, must be protected from falling by the use of:

(i) A guardrail system meeting the requirements of § 1910.29 of this subpart;

(ii) A designated area meeting the requirements of § 1910.29 of this subpart;

(iii) A safety net system meeting the requirements of part 1926 of this chapter;

(iv) A travel restraint system meeting the requirements of subpart I of this part; or,

(v) A personal fall arrest systems meeting the requirements of subpart I of this part.

(8) *Repair, service, and assembly pits (pits) less than 10 feet in depth.* Repair, service, and assembly pits less than 10 feet (3 m) deep need not be protected by a fall protection system provided that the following requirements are met:

(i) Access to any area within 6 feet (1.8 m) of the edge of the pit is limited to trained, authorized employees;

(ii) Floor markings in colors contrasting to that of the surrounding area are applied, or rope, wire, or chain with support stanchions meeting the requirements of § 1910.29(d), or a combination of these are placed at a distance of at least 6 feet (1.8 m) from the edge of the pit; and,

(iii) Caution signs stating, "Caution—Open Floor," or a similar legend, are posted so that they are readily visible to employees entering the pit area.

Note to paragraph (b)(8)(iii) of this section: Caution signs must meet the requirements of § 1910.145.

(9) *Fixed ladders.* The following requirements apply to all fixed ladders except those used in outdoor advertising. Requirements for fixed ladders used in outdoor advertising are found in § 1910.28(b)(10).

(i) Fixed ladders must be provided with cages, wells, ladder safety systems, or personal fall protection systems when the length of the climb is less than 24 feet (7.3 m), but the top of the ladder is at a distance greater than 24 feet (7.3 m) above lower levels.

(ii) Where the total length of a climb equals or exceeds 24 feet (7.3 m), fixed ladders must be equipped with one of the following:

(A) Ladder safety system meeting the requirements of § 1910.29 of this subpart;

(B) Personal fall protection system meeting the requirements of subpart I of this part, and rest platforms at intervals not to exceed 150 ft (45.7 m); or

(C) A cage or well, and multiple ladder sections, with each ladder section not to exceed 50 feet (15.2 m) in length. Ladder sections must be offset from adjacent sections, and landing platforms must be provided at maximum intervals of 50 feet (15.2 m).

Note to paragraph (b)(9) of this section: Total length of climb is the total vertical distance that an employee could climb when traveling between the start of a climb to the finished height of the climb. This total distance includes all ladder segments of a climb, as well as any vertical distance in between ladder segments.

(10) *Outdoor advertising (billboards).* The employer must ensure that: (i) For climbs on the fixed ladder of up to 50 feet (15.2 m), or heights of up to 65 feet (19.8 m) from grade, each employee who climbs a combination of a portable and a fixed ladder wears a body belt or body harness equipped with an appropriate 18 inch (46 cm) rest lanyard as a means to tie off to the fixed ladder as required by subpart I of this part.

(ii) Each employee who climbs a combination of a portable and a fixed ladder where the length of the fixed ladder climb exceeds 50 feet (15.2 m), or where the ladder ascends to heights exceeding 65 feet (19.8 m) from grade is protected through the installation of an appropriate ladder safety system for the entire length of the fixed ladder climb.

(iii) Each employee who climbs fixed ladders equipped with ladder safety systems uses the systems properly, and follows appropriate procedures for inspection and maintenance of the systems.

(iv) All ladder safety systems installed on fixed ladders are properly maintained and used.

(v) Each employee who routinely climbs fixed ladders undergoes training and demonstrates the physical capability to perform the necessary climbs safely. Each employee must satisfy the criteria for qualified climber found in § 1910.29(h).

(vi) Each employee keeps both hands free of tools or material when ascending or descending a ladder.

(vii) Each employee is protected by an appropriate fall protection system upon reaching his or her work position.

(11) *Stairways.* (i) Each employee exposed to a fall of 4 feet (1.2 m) or more to lower levels from an unprotected side or edge of a stairway landing must be protected by a guardrail or stair rail system.

(ii) Every flight of stairs having 3 treads and 4 or more risers must be equipped with stair railing systems and hand rails as follows:

Stair width	Enclosed	One open side	Two open sides	With earth built up on both sides
Less than 44 inches (1.1 m).	At least one handrail.	One stair rail system with handrail on open side.	One stair rail system with handrail on each open side.	
44 inches (1.1 m) through 88 inches (2.2 m).	One handrail on each enclosed side.	One stair rail system with handrail on open side.	One stair rail system with handrail on each open side.	
Greater than 88 inches (2.2 m).	One handrail on each enclosed side and one intermediate handrail located in the middle of the stair.	One stair rail system with handrail on open side and one intermediate handrail located in the middle of the stair.	One stair rail system with handrail on each open side and one intermediate handrail located in the middle of the stair.	
Exterior stairs less than 44 inches (1.1 m).	.....	.....	.....	One handrail on at least one side.

Note to table: The width of the stair must be clear of all obstructions except handrails.

(iii) Notwithstanding the table above, where ship stairs or alternating tread type stairs are installed, they must be equipped with handrails on both sides.

(12) *Scaffolds (inlcuding rope descent systems).* (i) Each employee on a scaffold must be protected from falls in accordance with part 1926 of this chapter.

(ii) Each employee using a rope descent system must be protected from falling 4 feet (1.2 m) or more to lower levels by a personal fall arrest system meeting the requirements of subpart I of this part.

(13) *Walking-working surfaces not otherwise addressed.* Except as provided in this section or by fall protection provisions of other subparts of part 1910, each employee on a walking-working surface 4 feet (1.2 m) or more above lower levels must be protected from falling by:

(i) A guardrail system meeting the requirements of § 1910.29 of this subpart;

(ii) A designated area meeting the requirements of § 1910.29 of this subpart;

(iii) A safety net system meeting the requirements of part 1926 of this chapter;

(iv) A travel restraint system meeting the requirements of subpart I of this part; or,

(v) A personal fall arrest system meeting the requirements of subpart I of this part.

(14) *Protection for floor holes.* (i) Every stairway floor hole shall be guarded by a guardrail system constructed in accordance with paragraph § 1910.29(b) of this subpart. The guardrail system shall be provided on all exposed sides (except at the entrance to the stairway). For infrequently used stairways where traffic across the opening prevents the use of a fixed guardrail system (as when located in aisle spaces), employers have the option of using a guard that consists of a hinged floor-opening cover of standard strength and construction, and a removable guardrail system on all exposed sides (except at the entrance to stairway).

Note to paragraph § 1910.28(b)(14)(i): For the purpose of this provision, the term "infrequently" means use of the stairway on less than a daily basis.

(ii) Every ladderway floor hole or platform shall be guarded by a guardrail system with toeboards on all exposed sides (except at entrance to the hole), with the passage through the guardrail system provided by a swinging gate or offset such that an employee cannot walk directly into the ladderway floor hole.

(iii) Every hatchway and chute-floor hole shall be guarded by one of the following:

(A) A hinged floor-hole cover of standard strength and construction equipped with a guardrail system permanently attached so as to leave only one exposed side. When the hole is not in use, the cover shall be closed or the exposed side shall be guarded by a removable guardrail system with top and mid rails;

(B) A removable guardrail system with toeboard on not more than two sides of the hole and fixed guardrail system with toeboards on all other exposed sides. The removable guardrail system shall remain in place when the hole is not in use; or

(C) When operating conditions require feeding material through a hatchway or chute hole, each employee shall be protected from falling through the hole by a guardrail system or a travel-restraint system.

(c) *Protection from falling objects.* When an employee is exposed to falling objects, the employer must ensure that each employee wear head protection meeting the requirements of subpart I of this part, and must implement one or more of the following measures:

(1) Erect toeboards, screens, or guardrail systems to prevent objects from falling from higher levels;

(2) Erect a canopy structure and keep potential falling objects far enough from the edge of the higher level so that those objects would not go over the edge if they were accidentally displaced; or

(3) Barricade the area to which objects could fall, prohibit employees from entering the barricaded area, and keep objects far enough from the edge so those objects do not go over the edge.

§ 1910.29 Fall protection systems criteria and practices.

(a) *General.* (1) Fall protection systems required by this part must comply with the applicable provisions of this section except that *personal* fall protection systems, including all body belts and body harnesses, must meet the applicable requirements of subpart I of this part.

(2) Employers must provide and install all fall protection systems required by this subpart and must comply with all other pertinent requirements (including training) of this subpart before any employee begins work that necessitates fall protection.

(b) *Guardrail systems.* Except as provided in paragraph (b)(16) of this section, guardrail systems, and their use must comply with the following provisions:

(1) Top edge height of top rails, or equivalent guardrail system members, must be 42 inches (107 cm) plus or minus 3 inches (8 cm) above the walking-working level. When conditions warrant, the height of the top edge may exceed the 45-inch (114 cm) height, provided the guardrail system meets all other criteria of paragraph (b) of this section.

(2) Midrails, screens, mesh, intermediate vertical members, or equivalent intermediate structural members must be installed between the top edge of the guardrail system and the walking-working surface when there is no wall or parapet wall at least 21 inches (53 cm) high.

(i) Midrails, when used, must be installed at a height midway between the top edge of the guardrail system and the walking-working level.

(ii) Screens and mesh, when used, must extend from the top rail to the walking-working level and along the entire opening between top rail supports.

(iii) Intermediate members (such as balusters), when used between posts, must be not more than 19 inches (48 cm) apart.

(iv) Other structural members (such as additional midrails and architectural panels) must be installed such that there are no openings in the guardrail system that are more than 19 inches (48 cm) wide.

(3) Guardrail systems must be capable of withstanding, without failure, a force of at least 200 pounds (890 N) applied within 2 inches (5 cm) of the top edge, in any outward or downward direction, at any point along the top edge.

(4) When the 200-pound (890–N) test load specified in paragraph (b)(3) of this section is applied in a downward direction, the top edge of the guardrail must not deflect to a height less than 39 inches (99 cm) above the walking-working level.

(5) Midrails, screens, mesh, intermediate vertical members, solid panels, and equivalent structural members must be capable of withstanding, without failure, a force of at least 150 pounds (667 N) applied in any downward or outward direction at any point along the midrail or other member.

(6) Guardrail systems must be surfaced to prevent injury to an employee from punctures or lacerations, and to prevent snagging of clothing.

(7) The ends of all top rails and midrails must not overhang the terminal posts, except where such overhang does not constitute a projection hazard.

(8) Steel banding and plastic banding must not be used as top rails or midrails.

(9) Top rails and midrails must be at least 0.25-inches (0.6 cm) in diameter or thickness.

(10) When guardrail systems are used at hoisting areas, a chain gate or removable guardrail section must be placed across the access opening between guardrail sections when hoisting operations are not taking place.

(11) When guardrail systems are used at holes, they must be erected on all unprotected sides or edges of the hole.

(12) When guardrail systems are used around holes used for the passage of materials, the hole must have not more than two sides provided with removable guardrail sections to allow the passage of materials. When the hole is not in use, it must either be closed over with a cover or a guardrail system must be provided along all unprotected sides or edges.

(13) When guardrail systems are used around holes used as points of access (such as ladderways), they must either be provided with a gate, or be so offset that a person cannot walk directly into the hole.

(14) Guardrail systems used on ramps and runways must be erected along each unprotected side or edge.

(15) Manila, plastic, or synthetic rope being used for top rails or midrails must be inspected as frequently as necessary to ensure that it continues to meet the strength requirements of paragraph (b)(3) of this section.

(16) Criteria for guardrail systems on scaffolds must meet the applicable requirements set forth in part 1926 of this chapter.

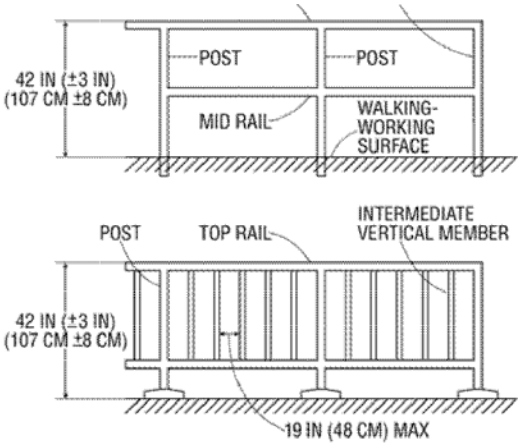

Figure D-10 – Guard Rail Systems

(c) *Safety net systems.* Criteria for safety net systems must meet the applicable requirements set forth in part 1926 of this chapter.

(d) *Designated areas.* (1) Where designated areas are permitted by § 1910.28 (*see* § 1910.28(b)(1)), the employer must ensure that:

(i) Employees remain within the designated area while work operations are underway;

(ii) The work be of a temporary nature, such as maintenance on roof-top equipment;

(iii) Designated areas be established only on surfaces that have a slope from the horizontal of 10 degrees or less (or slope of 4 in 12 or less); and

(iv) The perimeter of the designated area be delineated with a line consisting of a rope, wire, or chain in accordance with the criteria in paragraphs (d)(2) through (d)(4) of this section.

(2) After being erected with the line (such as rope, wire, or chain) attached:

(i) Stanchions must be capable of resisting, without tipping over, a force of at least 16 pounds (71 N) applied horizontally against the stanchion. The force must be applied 30 inches (76 cm) above the work surface and perpendicular to the designated area perimeter, and in the direction of the unprotected side or edge;

(ii) The line must have a minimum breaking or tensile strength of 500 pounds (2.2 kN). After being attached to the stanchions, the line must be capable of supporting, without breaking, the loads applied to the stanchions as prescribed in paragraph (d)(2)(i) of this section;

(iii) The line must be attached at each stanchion in such a way that pulling on one section of the line between stanchions will not result in slack being taken up in adjacent sections before the stanchion tips over;

(iv) The line must be installed in such a manner that its lowest point (including sag) is no less than 34 inches (86 cm) or more than 39 inches (99 cm) from the walking-working surface; and

(v) The line forming the designated area must be clearly visible from any unobstructed location within the designated area up to 25 feet (7.6 m) away, or at the maximum distance a worker may be positioned away from the line, whichever is less.

(3)(i) Stanchions must be erected as close to the work area as is permitted by the task.

(ii) The perimeter of the designated area must be erected at least 6 feet (1.8 m) from the unprotected side or edge.

(iii) When mobile mechanical equipment is being used, the line must be erected not less than 6 feet (1.8 m) from the unprotected side or edge which is parallel to the direction of mechanical equipment operation, and not less than 10 feet (3 m) from the unprotected side or edge which is perpendicular to the direction of mechanical equipment operation.

(4) Access to the designated area must be by a clear path, formed by two lines, attached to stanchions that meet the strength, height, and visibility requirements of this paragraph.

(e) *Covers.* Covers for holes in floors, roofs, and other walking-working surfaces must meet the following requirements:

(1) Covers located in roadways and vehicular aisles must be capable of supporting, without failure, at least twice the maximum axle load of the largest vehicle expected to cross over the cover.

(2) All other covers must be capable of supporting, without failure, at least twice the weight of employees, equipment, and materials that may be imposed on the cover at any one time.

(3) All covers must be secured when installed so as to prevent accidental displacement, *e.g.,* displacement by wind, equipment, or employees.

(4) All covers must be color-coded or marked with the word "HOLE" or "COVER" to provide warning of the hazard.

(5) The requirement of paragraph (e)(4) does not apply to cast iron manhole covers or steel grates, such as those used on streets or roadways.

(f) *Handrail and stair rail systems.* (1) *Height criteria.* (i) Handrails may not be less than 30 inches (76 cm) or more than 37 inches (94 cm) from the upper surface of the tread.

(ii) The height of stair rail systems installed before (date 90 days after the effective date of the final rule) must not be less than 30 inches (76 cm) from the upper surface of the tread. The height of stair rail systems installed on or after (date 90 days after the effective date of the final rule) must be not less than 36 inches (91 cm).

Note to paragraphs (f)(1)(i) and (f)(1)(ii) of this section: The height of a handrail or a stair rail system must be measured from the upper surface of the top rail to the surface of the tread in line with the face of the riser at the forward edge of the tread.

(iii) A stair rail may serve as a handrail when the height of the top edge is not more than 37 inches (94 cm) nor less than 36 inches (91 cm) when measured at the forward edge of the tread surface.

(2) *Finger clearance.* The minimum clearance between handrails, including the top edge of stair rail systems serving as handrails, and any obstructions must be 3 inches (8 cm).

(3) *Surfaces.* Handrail and stair rail systems must be surfaced to prevent

injury to employees from punctures or lacerations, and to prevent snagging of clothing.

(4) *Openings in stair rails.* Openings in a stair rail system must be a maximum of 19 inches (48 cm) in their least dimension.

(5) *Handhold.* Handrails must have the shape and dimension necessary to provide a firm handhold for employees.

(6) *Projection hazards.* Ends of stair rail systems and handrails must not present a projection hazard.

(7) *Strength criteria.* Handrails and the top rails of stair rail systems must be capable of withstanding, without permanent deformation or a loss of support, a force in any downward or outward direction at any point along the top edge, of at least 200 pounds (890 N) applied within 2 inches (5 cm) of the top edge of the rail.

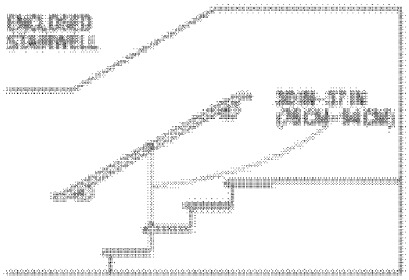

Figure D-11 -- Handrail Measurement

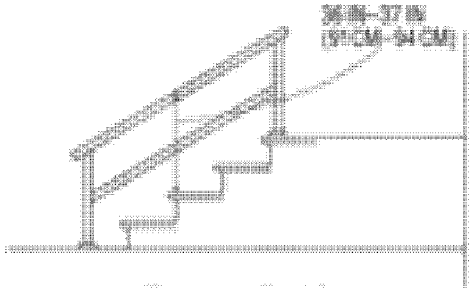

Figure D-12 – Combination Handrail and Stair Rail

(g) *Cages, wells, and platforms used with fixed ladders.* (1) Cages and wells installed on fixed ladders must be designed to permit easy access to or egress from the ladder that they enclose. The cages and wells must be continuous throughout the length of the fixed ladder except for access, egress, and other transfer points. Cages and wells must be designed and constructed to contain employees in the event of a fall and to direct them to a lower landing.

(2) Platforms used with fixed ladders must provide a horizontal surface of at least 24 inches by 30 inches (61 cm by 76 cm).

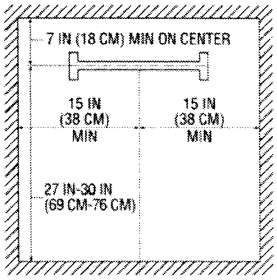

Figure 13 -- Clearances for Fixed Ladders in Wells

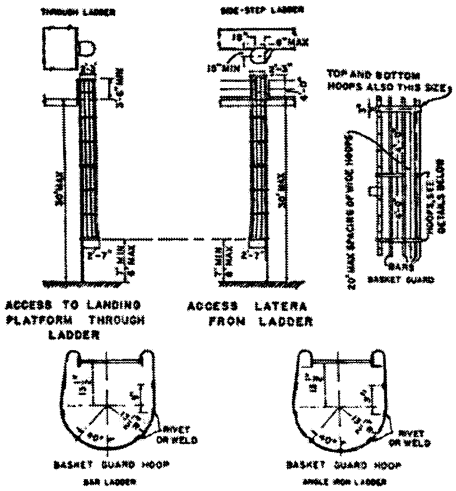

Figure D-14 – Example of General Construction of Cages

(h) *Qualified Climbers.* This option is available only to employees engaged in outdoor advertising operations, as established by § 1910.28(b)(10).

(1) A qualified climber must be physically capable, as demonstrated through observations of actual climbing activities or by a physical examination, of performing the duties that may be assigned.

(2) A qualified climber must have successfully completed a training or apprenticeship program that included hands-on training for the safe climbing of ladders and must be retrained as necessary to ensure the necessary skills are maintained.

(3) The employer must ensure through performance observations and formal classroom or on-the-job training that the qualified climber has the skill to safely perform the climb.

(4) A qualified climber must perform climbing duties as a routine work activity.

(i) *Ladder safety systems.* (1) Design criteria for systems components. Ladder safety systems must permit the employee using the system to ascend or descend without continually having to hold, push, or pull any part of the system, leaving both hands free for climbing.

(2) The connection between the carrier or lifeline and the point of attachment to the body belt or harness must not exceed 9 inches (23 cm) in length.

(3) Mountings for rigid carriers must be attached at each end of the carrier, with intermediate mountings, as necessary, spaced along the entire length of the carrier to provide strength necessary to stop employee falls.

(4) Mountings for flexible carriers must be attached at each end of the carrier. Cable guides utilized with a flexible carrier must be installed at a minimum spacing of 25 feet (7.6 m) and a maximum spacing of 40 feet (12.2 m) along the entire length of the carrier.

(5) The design and installation of mountings and cable guides must not reduce the design strength of the ladder.

(6) Ladder safety systems and their support systems must be capable of withstanding without failure a drop test consisting of an 18-inch (41-cm) drop of a 500-pound (227-kg) weight.

(j) *Personal fall protection systems.* Body belts, harnesses, and other components used in personal fall arrest systems, work positioning systems, and travel restraint systems must meet the applicable requirements of subpart I of this part.

(k) *Protection from falling objects.* Toeboards, guardrails, and canopies, when used as falling object protection, must comply with the following provisions:

(1) Toeboards must be erected along the edge of the overhead walking-working surface for a distance sufficient to protect employees below.

(2) Toeboards must be: (i) A minimum of 3.5 inches (9 cm) in vertical height from their top edge to the level of the walking-working surface. They must have not more than a 0.25-inch (0.5-cm) clearance above the walking-working surface. They must be solid or have openings not over 1 inch (3 cm) in the greatest dimension;

(ii) At least 2.5 inches (6 cm) high where toeboards are used around repair, service, and assembly pits, except that toeboards may be omitted at sections around the pits where the toeboard would prevent access to vehicles over pits.

(3) Where tools, equipment, or materials are piled higher than the top

edge of a toeboard, paneling or screening must be erected from the walking-working surface or toeboard to the top of a guardrail system's top rail or midrail for a distance sufficient to protect employees.

(4) Toeboards must be capable of withstanding, without failure, a force of at least 50 pounds (222 N) applied in any downward or outward direction at any point along the toeboard.

(5) All openings on guardrail systems must be small enough to prevent passage of potential falling objects.

(6) Canopies must be strong enough to prevent collapse and to prevent penetration by any falling objects.

(l) *Grab handles.* Each grab handle must be no less than 12 inches (30 cm) in length, be mounted to give at least 3 inches (8 cm) of clearance from the framing or opening, and be capable of withstanding a maximum horizontal pull-out force equal to two times the intended load or 200 pounds (890 N), whichever is greater.

§ 1910.30 Training requirements.

(a) *Fall Hazards.* (1) The employer must provide training for each employee who uses personal fall protection equipment and those required to be trained as indicated elsewhere in this subpart. The training must enable each employee to recognize the hazards of falling and the procedures to be followed to minimize these hazards.

(2) The employer must ensure that each employee is trained by a qualified person. The employee must be trained in the following areas:

(i) The nature of fall hazards in the work area;

(ii) The correct procedures for erecting, maintaining, disassembling, and inspecting the fall protection systems to be used;

(iii) The use and operation of guardrail systems, safety net systems, warning lines used in designated areas, and other protection; and

(iv) The use, operation, and limitations of personal fall protection systems including proper hook-up, anchoring and tie-off techniques, methods of use, and proper methods of equipment inspection and storage as recommended by the manufacturer.

(b) *Equipment hazards.* (1) The employer must ensure that each employee is trained in the proper care, use, and inspection of equipment covered by this subpart before they use the equipment.

(2) The employer must ensure that each employee is instructed in the proper placing and securing of dockboards to prevent unintentional movement.

(3) The employer must ensure that each employee who uses rope descent systems is trained and retrained as necessary in the proper rigging and safe use of the equipment in accordance with § 1910.27.

(c) *Retraining.* When the employer has reason to believe that any employee who has already been trained does not have the understanding and skill required by paragraphs (a) and (b) of this section, the employer must retrain that employee. Situations where retraining is required include, but are not limited to, the following:

(1) Changes in the workplace render previous training invalid;

(2) Changes in the types of fall protection systems or equipment to be used render previous training invalid; or

(3) Inadequacies in an affected employee's knowledge or use of fall protection systems or equipment indicate that the employee has not retained the requisite understanding or skill.

(d) *Training must be understandable.* The employer must provide information and training to each employee in a manner that is understandable to that employee.

2. Revise the authority citation for subpart F of part 1910 to read as follows:

Authority: Secs. 4, 6, 8, Occupational Safety and Health Act of 1970 (29 U.S.C. 653, 655, 657); Secretary of Labor's Order No. 12–71 (36 FR 8754), 8–76 (41 FR 25059) 9–83 (48 FR 35736), 1–90 (55 FR 9033), 6–96 (62 FR 111), 3–2000 (65 FR 50017), 5–2002 (67 FR 65008), or 5–2007 (72 FR 31159), as applicable; and 29 CFR part 1911.

Subpart F—Powered Platforms, Manlifts, and Vehicle-Mounted Work Platforms

3–4. In § 1910.66:

A. Revise paragraphs (f)(5)(ii)(L) and (M), (f)(5)(iii)(B), and (j);

B. Remove and reserve Appendix C; and

C. Amend Appendix D by revising paragraph (c)(4) to read as follows:

§ 1910.66 Powered platforms for building maintenance.

* * * * *

(f) * * *

(5) * * *

(ii) * * *

(L) The platform shall be provided with a secondary wire rope suspension system if the platform contains overhead structures which restrict the emergency egress of employees. A horizontal lifeline or a direct connection anchorage shall be provided, as part of a personal fall arrest system which meets the requirements of subpart I of this part, for each employee on such a platform.

(M) A vertical lifeline shall be provided as part of a personal fall arrest system which meets the requirements of subpart I of this part, for each employee on a working platform suspended by two or more wire ropes, if the failure of one wire rope or suspension attachment will cause the platform to upset. If a secondary wire rope suspension is used, vertical lifelines are not required for the personal fall arrest system, provided that each employee is attached to a horizontal lifeline anchored to the platform.

(iii) * * *

(B) Each single point suspended working platform shall be provided with a secondary wire rope suspension system which will prevent the working platform from falling should there be a failure of the primary means of support, or if the platform contains overhead structures which restrict the egress of the employees. A horizontal lifeline or a direct connection anchorage shall be provided, as part of a personal fall arrest system which meets the requirements of subpart I of this part, for each employee on the platform.

* * * * *

(j) *Personal fall protection.* Employees on working platforms shall be protected by a personal fall arrest system meeting the requirements of subpart I of this part and as otherwise provided by this standard.

* * * * *

Appendix C to § 1910.66 [Reserved]

Appendix D to § 1910.66—Existing Installations (Mandatory)

* * * * *

(c) * * *

(4) *Access to the roof car.* Safe access to the roof car and from the roof car to the working platform shall be provided. If the access to the roof car at any point of its travel is not over the roof area or where otherwise necessary for safety, then self-closing, self-locking gates shall be provided. Applicable provisions of subpart D, Walking-Working Surfaces, apply.

* * * * *

5. In § 1910.67, revise paragraph (c)(2)(v) to read as follows:

§ 1910.67 Vehicle-mounted elevating and platforms.

* * * * *

(c) * * *

(2) * * *

(v) A positioning system or a personal fall arrest system which complies with subpart I of this part shall be worn and attached to the boom or basket when working from an aerial lift.

* * * * *

6. In § 1910.68, revise paragraphs (b)(8)(ii) and (b)(12) to read as follows:

§ 1910.68 Manlifts.

* * * * *

(b) * * *

(8) * * *

(ii) *Construction.* The rails shall be standard guardrails with toeboards meeting the provisions in subpart D of this part.

* * * * *

(12) *Emergency exit ladder.* A fixed metal ladder accessible from both the "up" and "down" run of the manlift shall be provided for the entire travel of the manlift. Such escape ladders shall comply with subpart D of this part.

* * * * *

Subpart I—[Amended]

7. The authority citation for subpart I is revised to read as follows:

Authority: Sections 4, 6, and 8 of the Occupational Safety and Health Act of 1970 (29 U.S.C. 653, 655, 657); Secretary of Labor's Order No. 12–71 (36 FR 8754), 8–76 (41 FR 25059), 9–83 (48 FR 35736), 1–90 (55 FR 9033), 5–2002 (67 FR 65008), or 5–2007 (72 FR 31159) as applicable, and 29 CFR part 1911.

Sections 29 CFR 1910.133, 1910.135, and 1910.136 also issued under 5 U.S.C. 553.

8. Paragraph (g) of § 1910.132 is revised to read as follows:

§ 1910.132 General requirements.

* * * * *

(g) Paragraphs (d) and (f) of this section apply only to §§ 1910.133, 1910.135, 1910.136, 1910.138, and 1910.140. Paragraphs (d) and (f) of this section do not apply to §§ 1910.134 and 1910.137.

§ 1910.139 [Reserved]

9. Section 1910.139 is reserved.

10. Add new § 1910.140 to read as follows:

§ 1910.140 Personal fall protection systems.

(a) *Scope and application.* Personal fall protection systems required by part 1910 must comply with the applicable provisions of this section. This section establishes performance, care, and use criteria for all personal fall protection systems covered by this section. Additional requirements for specific types of personal fall protection systems are contained in paragraphs (d) and (e) of this section.

(b) *Definitions.*

Anchorage means a secure point of attachment for lifelines, lanyards, or deceleration devices.

Belt terminal means an end attachment of a window cleaner's positioning system used for securing the belt or harness to a window cleaner's belt anchor.

Body belt means a strap with means both for securing about the waist and for attaching to other components such as a lanyard or lifeline, used with positioning systems, travel restraint systems, or ladder safety systems.

Body harness means straps which may be secured about the employee in a manner to distribute the fall arrest forces over at least the thighs, pelvis, waist, chest, and shoulders with means for attaching it to other components of a personal fall arrest system.

Buckle means any device for holding the body belt or body harness closed around the employee's body.

Carrier means the track of a ladder safety system consisting of a flexible cable or rigid rail which is secured to the ladder or structure by mountings.

Competent person means a person who is capable of identifying hazardous or dangerous conditions in any personal fall protection system or any component thereof, as well as in their application and uses with related equipment.

Connector means a device that is used to couple (connect) parts of the fall protection system together.

D-ring means a connector used integrally in a harness as an attachment element or fall arrest attachment; in a lanyard, energy absorber, lifeline, or anchorage connector as an integral connector; or in a positioning or travel restraint system as an attachment element.

Deceleration device means any mechanism that serves to dissipate energy during a fall.

Deceleration distance means the vertical distance a falling employee travels before stopping, from the point at which the deceleration device begins to operate, excluding lifeline elongation and free fall distance. It is measured as the distance between the location of an employee's body harness attachment point at the moment of activation (at the onset of fall arrest forces) of the deceleration device during a fall, and location of that attachment point after the employee comes to a full stop.

Equivalent means alternative designs, materials or methods to protect against a hazard, which the employer can demonstrate will provide an equal or greater degree of safety for employees compared to the methods, materials, or designs specified in the standard.

Free fall means the act of falling before the personal fall arrest system begins to apply force to arrest the fall.

Free fall distance means the vertical displacement of the fall arrest attachment point on the employee's body belt or body harness between onset of the fall and just before the system begins to apply force to arrest the fall. This distance excludes deceleration distance, lifeline and lanyard elongation, but includes any deceleration device slide distance or self-retracting lifeline/lanyard extension before the devices operate and fall arrest forces occur.

Lanyard means a flexible line of rope, wire rope, or strap which generally has a connector at each end for connecting the body belt or body harness to a deceleration device, lifeline, or anchorage.

Lifeline means a component consisting of a flexible line for connection to an anchorage at one end to hang vertically (vertical lifeline) or for connection to anchorages at both ends to stretch horizontally (horizontal lifeline), and which serves as a means for connecting other components of a personal fall protection system to the anchorage.

Personal fall arrest system means a system used to arrest an employee in a fall from a working level. It consists of an anchorage, connector, and a body harness and may include a lanyard, deceleration device, lifeline, or suitable combinations of these.

Personal fall protection system means a system used to protect an employee from falling, or to safely arrest an employee's fall, should a fall occur. Examples include: A personal fall arrest system, a positioning system, or a travel restraint system.

Positioning system (sometimes called a work positioning system) means a system of equipment and connectors which, when used with its body belt or body harness, allows an employee to be supported on an elevated vertical surface, such as a wall or windowsill, and work with both hands free.

Qualified means a person who, by possession of a recognized degree, certificate, or professional standing, or who by extensive knowledge, training, and experience has successfully demonstrated the ability to solve or resolve problems relating to the subject matter, the work, or the project.

Rope grab means a deceleration device that travels on a lifeline and automatically, by friction, engages the lifeline and locks so as to arrest the fall of an employee. A rope grab usually employs the principle of inertial locking, cam/lever locking, or both.

Self-retracting lifeline/lanyard means a deceleration device containing a drum-wound line which can be slowly extracted from, or retracted onto, the drum under slight tension during normal movement by the employee, and

after onset of a fall, automatically locks the drum and arrests the fall.

Snaphook means a connector comprised of a hook-shaped body with a normally closed gate or similar arrangement that may be manually opened to permit the hook to receive an object and when released, automatically closes and locks to retain the object. Opening requires two separate actions. Snaphooks are generally one of two types, namely:

(1) Automatic-locking type (permitted) with a self-closing and self-locking gate which remains closed and locked until intentionally unlocked and opened for connection or disconnection; and

(2) Non-locking type (prohibited) with a self-closing gate which remains closed, but not locked, until intentionally opened for connection or disconnection.

Travel restraint (tether) line means a rope or wire rope used to transfer forces from a body support to an anchorage or anchorage connector in a travel restraint system.

Travel restraint system means a combination of an anchorage, anchorage connector, lanyard (or other means of connection), and body support intended to be used by an employee to limit travel to prevent exposure to a fall hazard. A travel restraint system is used such that it does not support any portion of the employee's weight; otherwise the system would be a positioning system or a personal fall arrest system.

Window cleaner's belt means a belt that consists of a waist-belt, an integral terminal runner or strap, and belt terminals.

Window cleaner's belt anchor (window anchor) means specifically designed fall-preventing attachment points, permanently affixed to a window frame or to a building part immediately adjacent to the window frame, for direct attachment of the terminal portion of a window cleaner's belt.

Window cleaner's positioning system means a system which consists of a window cleaner's belt secured to window anchors.

Work positioning system (*see* "*Positioning system*" above).

(c) *General requirements.* The following requirements apply to all personal fall protection systems.

(1) Connectors must be drop forged, pressed or formed steel, or made of equivalent materials.

(2) Connectors must have a corrosion-resistant finish, and all surfaces and edges must be smooth to prevent damage to interfacing parts of the system.

(3) When vertical lifelines are used, each employee must be attached to a separate lifeline.

(4) Lanyards and vertical lifelines must have a minimum breaking strength of 5,000 pounds (22.2 kN).

Note to paragraph (c)(4) of this section: The use of knots in lanyards and vertical lifelines may significantly reduce the breaking strength.

(5) Self-retracting lifelines and lanyards that automatically limit free fall distance to 2 feet (0.61 m) or less must have components capable of sustaining a minimum tensile load of 3,000 pounds (13.3 kN) applied to the device with the lifeline or lanyard in the fully extended position.

(6) Self-retracting lifelines and lanyards that do not limit free fall distance to 2 feet (0.61 m) or less, ripstitch lanyards, and tearing and deforming lanyards must be capable of sustaining a minimum tensile load of 5,000 pounds (22.2 kN) applied to the device with the lifeline or lanyard in the fully extended position.

(7) D-rings and snaphooks must be capable of sustaining a minimum tensile load of 5,000 pounds (22.2 kN).

(8) D-rings and snaphooks must be proof tested to a minimum tensile load of 3,600 pounds (16 kN) without cracking, breaking, or incurring permanent deformation.

(9) Snaphooks must be the locking type, which require two separate, consecutive movements to open.

(10) Unless designed for the following connections, snaphooks must not be connected:

(i) Directly to webbing, rope, or wire rope;

(ii) To each other;

(iii) To a D-ring to which another snaphook or connector is attached;

(iv) To a horizontal life line; or

(v) To any object that is incompatibly shaped or dimensioned in relation to the snaphook such that unintentional disengagement could occur when the connected object depresses the snaphook gate, allowing the components to separate.

(11) Horizontal lifelines:

(i) Must be designed, installed, and used under the supervision of a qualified person; and

(ii) Must be part of a complete personal fall arrest system that maintains a safety factor of at least two.

(12) Anchorages used for attachment to personal fall protection equipment must be independent of any anchorage being used to support or suspend platforms on which employees work.

(13) Except for window cleaner's belt anchors, which are covered under paragraph (e) of this section, anchorages must be capable of supporting at least 5,000 pounds (22.2 kN) for each employee attached, or must be designed, installed, and used under the supervision of qualified person as part of a complete personal fall protection system that maintains a safety factor of at least two.

(14) Travel restraint lines must be capable of sustaining a tensile load of at least 5,000 pounds (22.2 kN).

(15) Lifelines and carriers must not be made of natural fiber rope. When polypropylene ropes are used, they must contain an ultraviolet (UV) light inhibitor.

(16) Personal fall protection systems and their components must be used exclusively for employee fall protection and not for any other purpose, such as hoisting equipment or materials.

(17) A personal fall protection system or its components subjected to impact loading must be immediately removed from service and must not be used again for employee protection until a competent person inspects it and determines that it is undamaged and suitable for re-use.

(18) Personal fall protection systems must be inspected before each use for mildew, wear, damage, and other deterioration, and defective components must be removed from service.

(19) Ropes, belts, lanyards, and harnesses used for personal fall protection must be compatible with all connectors used.

(20) Ropes, belts, lanyards, lifelines, and harnesses used for personal fall protection must be protected from being cut, abraded, melted, or otherwise damaged.

(21) The employer must provide for prompt rescue of employees in the event of a fall.

(22) Personal fall protection systems must be worn with the attachment point of the body harness located in the center of the wearer's back near shoulder level, or above the wearer's head, except that the attachment point may be located in the pre-sternal position if the free fall distance is limited to 2 feet (0.6 m) or less and the maximum arresting forces are limited to 900 lbs (4 kN).

(d) *Personal fall arrest systems*—(1) *System performance criteria.* In addition to the general requirements in paragraph (c) of this section, personal fall arrest systems must, when stopping a fall:

(i) Limit maximum arresting force on an employee to 1,800 pounds (8 kN);

(ii) Bring an employee to a complete stop and limit the maximum

deceleration distance an employee travels to 3.5 feet (1.1 m); and

(iii) Have sufficient strength to withstand twice the potential impact energy of an employee free falling a distance of 6 feet (1.8 m), or the free fall distance permitted by the system, whichever is less.

Note to paragraph (d)(1) of this section: If the personal fall arrest system meets the criteria and protocols contained in Appendix D to § 1910.140, and if the system is being used by an employee having a combined tool and body weight of less than 310 pounds (140 kg), the system will be considered to be in compliance with the provisions of paragraphs (d)(1)(i) through (d)(1)(iii) of this section. If the system is used by an employee having a combined tool and body weight of 310 pounds (140 kg) or more, then the employer must appropriately modify the criteria and protocols of the appendix to provide proper protection for such heavier weights, or the system will not be deemed to be in compliance with the requirements of paragraphs (d)(1)(i) through (d)(1)(iii) of this section.

(2) *System use criteria.*

(i) On suspended scaffolds or similar work platforms with horizontal lifelines that may become vertical lifelines, the devices used to connect to the horizontal lifeline must be capable of locking in both directions on the lifeline.

(ii) Personal fall arrest systems must be rigged in such a manner that an employee can neither free fall more than 6 feet (1.8 m) nor contact any lower level.

(3) *Body belts.* Body belts are prohibited as part of a personal fall arrest system.

(e) *Positioning systems.* In addition to the general requirements in paragraph (c) of this section, positioning systems must meet the following requirements.

(1) *System performance requirements.*

(i) *General.* All positioning systems, except window cleaner's positioning systems, must be capable of withstanding, without failure, a drop test consisting of a 4-foot (1.2-m) drop of a 250-pound (113-kg) weight.

Note to paragraph (e)(1)(i) of this section: Positioning systems meeting the tests contained in Appendix D to 1910.140 are considered to be in compliance with these paragraphs.

(ii) *Window cleaner's positioning systems.* All window cleaner's positioning systems must:

(A) Be capable of withstanding without failure a drop test consisting of a 6-foot (1.8-m) drop of a 250-pound (113-kg) weight; and,

(B) Limit the initial arresting force to not more than 2,000 pounds (8.9 kN), with a duration not to exceed 2 milliseconds, and must limit any subsequent arresting forces imposed on the falling employee to not more than 1,000 pounds (4.5 kN).

Note to paragraph (e)(1)(ii) of this section: Positioning systems meeting the tests contained in Appendix D to 1910.140 are considered to be in compliance with these paragraphs.

(iii) *Lineman's body belt and pole strap systems.* The following additional test provisions apply to lineman's body belt and pole strap systems:

(A) A dielectric test of 819.7 volts, AC, per centimeter (25,000 volts per foot) for 3 minutes without visible deterioration;

Note to paragraph (e)(1)(iii)(A) of this section: Positioning straps that pass direct current tests at equivalent voltages are considered as meeting this requirement.

(B) A leakage test of 98.4 volts, AC, per centimeter (3,000 volts per foot) with a leakage current of no more than 1 mA;

Note to paragraph (e)(1)(iii)(B) of this section: Positioning straps that pass direct current tests at equivalent voltages are considered as meeting this requirement.

(2) *System use criteria for window cleaners positions systems.*

(i) Window cleaner's belts must be designed and constructed so that:

(A) Belt terminals will not pass through their fastenings on the belt or harness should one terminal become loosened from its window anchor; and

(B) The length of the runner from terminal tip to terminal tip is 8 feet (2.44 m) or less.

(ii) The anchors on a building to which the belt is to be fastened must be installed in the side frames of the window or in the mullions at a point not less than 42 inches (106.7 cm) or more than 51 inches (129.5 cm) above the window sill.

(iii) Each anchor, and the structure to which it is attached, must be capable of supporting a minimum load of 6,000 pounds (26.5 kN).

(iv) Rope that has sustained wear or deterioration materially affecting its strength must not be used.

(v) An anchor whose fastenings or supports are damaged or deteriorated must be removed or rendered unusable by detachment of its anchor head.

(vi) The use of an installed window cleaner's belt anchor for any purpose other than attachment of a window cleaner's belt is prohibited.

(vii) Both belt terminals must be attached to separate window cleaner's belt anchors during the cleaning operation.

(viii) Cleaning work is not permitted on a sill or ledge on which there is snow, ice, or any other slippery condition, or on a weakened or rotted sill or ledge.

(ix) A window cleaner may work from a windowsill only if a minimum standing room in relation to slope is provided as follows:

(A) When the sill width is at least 4 inches (10.1 cm), work is permitted with a slope of the sill from horizontal up to 15 degrees;

(B) For slopes between 15 and 30 degrees from horizontal, but in no case greater than 30, the minimum acceptable sill width is four inches (10.1 cm), plus 0.4 inches (1.0 cm) for every degree of slope greater than 15 degrees.

(x) The employer must ensure that the window cleaner attach at least one belt terminal to a window anchor before climbing through the window opening. The belt must not be completely disconnected from both anchors until the employee is back inside the window opening.

(xi)(A) The employer must ensure the window cleaner does not pass from one window to another while outside the building, but must return inside and repeat the belt terminal attachment procedure for each window as described in paragraph (e)(13) of this section.

(B) Traveling on the outside of the building is permitted if at least one window cleaner's belt terminal is attached at all times and the distance between anchors does not exceed 4 feet (1.2 m) horizontally, unless the sill or ledge is at least 1 foot (0.31 m) wide and the slope is less than 5 degrees, in which case the distance between anchors may be as much as 6 feet (1.8 m). However, this method of traveling shall not be permitted if the sill or ledge is not continuous with at least 6 inches (0.15 m) in front of the mullions or if each window unit is not readily accessible.

11. Add new Appendices C and D to subpart I of part 1910 to read as follows:

Appendix C to Subpart I of Part 1910—Personal Fall Protection Systems Non-Mandatory Guidelines

The following information generally applies to all personal fall protection systems and is intended to assist employers and employees comply with the requirements of § 1910.140 for personal fall protection systems.

(a) *Planning considerations.* It is important for employers to plan prior to using personal fall protection systems. Probably the most overlooked component of planning is locating suitable anchorage points. Such planning should ideally be done before the structure or building is constructed so that anchorage points can be used later for window cleaning or other building maintenance.

(b) *Selection and use considerations.* (1) The kind of personal fall protection system selected should be appropriate for the employee's specific work situation. Free fall distances should always be kept to a minimum. Many systems are designed for particular work applications, such as climbing ladders and poles; maintaining and servicing equipment; and window cleaning. Consideration should be given to the environment in which the work will be performed. For example, the presence of acids, dirt, moisture, oil, grease, or other substances, and their potential effects on the system selected, should be evaluated. Hot or cold environments may also affect fall protection systems. Wire rope should not be used where electrical hazards are anticipated. As required by § 1910.140(c)(21), the employer must provide a means for promptly rescuing an employee should a fall occur.

(2) Where lanyards, connectors, and lifelines are subject to damage by work operations, such as welding, chemical cleaning, and sandblasting, the component should be protected, or other securing systems should be used. Unless designed for use in a personal fall protection system, equipment such as linemen's pole straps should not be used as lanyards because such equipment may not meet the strength and performance criteria necessary for a personal fall arrest system. The employer should fully evaluate the work conditions and environment (including seasonal weather changes) before selecting the appropriate personal fall protection system. Once in use, the system's effectiveness should be monitored. A program for cleaning and maintaining the system may be necessary.

(c) *Testing considerations.* Before purchasing a personal fall protection system, an employer should insist that the supplier provide information about its test performance (using recognized test methods) so the employer will know that the system meets the criteria in § 1910.140. Otherwise, the employer should test the equipment to ensure that it is in compliance. Appendix D to this subpart contains test methods which are recommended for evaluating the performance of any system. There are some circumstances in which an employer can evaluate a system based on data and calculations derived from the testing of similar systems. Enough information must be available for the employer to demonstrate that its system and the tested system(s) are similar in both function and design.

(d) *Component compatibility considerations.* Ideally, a personal fall protection system is designed, tested, and supplied as a complete system. However, it is common practice for lanyards, connectors, lifelines, deceleration devices, body belts, and body harnesses to be interchanged since some components wear out before others. Employers and employees should realize that not all components are interchangeable. For instance, a lanyard should not be connected between a body harness and a deceleration device of the self-retracting type (unless specifically allowed by the manufacturer) since this can result in additional free fall for which the system was not designed. In addition, positioning components, such as pole straps, ladder hooks and rebar hooks, should not be used in personal fall arrest systems unless they meet the appropriate requirements of part 1910 (e.g., §§ 1910.140, .268 and .269). Any substitution or change to a personal fall protection system should be fully evaluated or tested by a competent person to determine that it meets applicable OSHA standards before the modified system is put in use.

(e) *Employee training considerations.* As required by § 1910.30, before an employee uses a fall protection system, the employer must ensure that he or she is trained in the proper use of the system. This may include the following: The limits of the system; proper anchoring and tie-off techniques; estimating freefall distance, including determining elongation and deceleration distance; methods of use; and inspection and storage. Careless or improper use of fall protection equipment can result in serious injury or death. Employers and employees should become familiar with the material in this standard and appendix, as well as manufacturers' recommendations, before a system is used. It is important for employees to be aware that certain tie-offs (such as using knots and tying around sharp edges) can reduce the overall strength of a system. Employees also need to know the maximum permitted free fall distance. Training should stress the importance of inspections prior to use, the limitations of the equipment to be used, and unique conditions at the worksite that may be important. Also, OSHA suggests that rope be used according to manufacturer's recommendations, especially if polypropylene rope is used.

(f) *Instruction considerations.* Employers should obtain comprehensive instructions from the supplier or a qualified person as to the system's proper use and application, including, where applicable:

1. The force measured during the sample force test;
2. The maximum elongation measured for lanyards during the force test;
3. The deceleration distance measured for deceleration devices during the force test;
4. Caution statements on critical use limitations;
5. Limits of the system;
6. Proper hook-up, anchoring and tie-off techniques, including the proper D-ring or other attachment point to use on the body harness;
7. Proper climbing techniques;
8. Methods of inspection, use, cleaning, and storage; and
9. Specific lifelines that may be used.

(g) *Inspection considerations.* Personal fall protection systems must be regularly inspected before each use. Any component with a significant defect, such as a cut, tear, abrasion, mold, or evidence of undue stretching, an alteration or addition that might affect its efficiency, damage due to deterioration, fire, acid, or other corrosive damage, distorted hooks or faulty hook springs, tongues that are unfitted to the shoulder of buckles, loose or damaged mountings, non-functioning parts, or wear, or internal deterioration must be removed from service immediately, and should be tagged or marked as unusable, or destroyed.

(h) *Rescue considerations.* As required by § 1910.140(c)(21), when personal fall arrest systems are used, special consideration must be given to rescuing an employee should a fall occur. The availability of rescue personnel, ladders or other rescue equipment should be evaluated. In some situations, equipment allowing employees to rescue themselves after the fall has been arrested may be desirable, such as devices that have descent capability.

(i) *Tie-off considerations.* Employers and employees should at all times be aware that the strength of a personal fall arrest system is based on its being attached to an anchoring system that does not significantly reduce the strength of the system (such as an eye-bolt/snaphook anchorage). Therefore, if a means of attachment is used that will reduce the strength of the system, that component should be replaced by a stronger one that will also maintain the appropriate maximum deceleration characteristics. The following is a listing of some situations in which employers and employees should be especially cautious.

1. *Tie-off using a knot in the lanyard or lifeline (at any location).* The strength of the line can be reduced by 50 percent or more if a knot is used. Therefore, a stronger lanyard or lifeline should be used to compensate for the knot, or the lanyard length should be reduced (or the tie-off location raised) to minimize free fall distance, or the lanyard or lifeline should be replaced by one which has an appropriately incorporated connector to eliminate the need for a knot.

2. *Tie-off around rough or sharp (e.g. "H" or "I" beams) surfaces.* This practice reduces strength drastically. Such tie-offs should be avoided whenever possible. An alternate means should be used such as a snaphook/D-ring connection, a tie-off apparatus (steel cable tie-off), an effective padding of the surfaces, or an abrasion-resistant strap around the supporting member. If these alternative means of tie-off are not available, the employer should try to minimize the potential free fall distance.

3. *Knots.* Sliding hitch knots should not be used except in emergency situations. The one-and-one sliding hitch knot should never be used because it is unreliable in stopping a fall. The two-and-two, or three-and-three knots (preferable) may be used in emergency situations; however, care should be taken to limit free fall distances because of reduced lifeline/lanyard strength. OSHA recommends that a competent or qualified person oversee the use of knots.

(j) *Horizontal lifelines.* Horizontal lifelines, depending on their geometry and angle of sag, may be subjected to greater loads than the impact load imposed by an attached component. When the angle of horizontal lifeline sag is less than 30 degrees, the impact force imparted to the lifeline by an attached lanyard is greatly amplified. For example, with a sag angle of 15 degrees the force amplification is about 2:1, and at 5 degrees sag it is about 6:1. Depending on the angle of sag, and the line's elasticity, the strength of the horizontal lifeline, and the anchorages to which it is attached should be increased a number of times over that of the lanyard.

Extreme care should be taken in considering a horizontal lifeline for multiple tie-offs. If there are multiple tie-offs to a horizontal lifeline, and one employee falls, the movement of the falling employee and the horizontal lifeline during arrest of the fall may cause other employees to fall. Horizontal lifeline and anchorage strength should be increased for each additional employee to be tied-off. For these and other reasons, the systems using horizontal lifelines must be designed only by qualified persons. OSHA recommends testing installed lifelines and anchors prior to use.

(k) *Eye-bolts.* It must be recognized that the strength of an eye-bolt is rated along the axis of the bolt, and that its strength is greatly reduced if the force is applied at right angles to this axis (in the direction of its shear strength). Care should also be exercised in selecting the proper diameter of the eye to avoid creating a roll-out hazard (accidental disengagement of the snaphook from the eye-bolt).

(l) *Vertical lifeline considerations.* As required by § 1910.140(c)(3), each employee must have a separate lifeline when the lifeline is vertical. If multiple tie-offs to a single lifeline are used, and one employee falls, the movement of the lifeline during the arrest of the fall may pull other employees' lanyards, causing them to fall as well.

(m) *Snaphook considerations.* As required by § 1910.140(c)(10), the following connections must be avoided unless the locking snaphook has been designed for them because they are conditions that can result in rollout:

(1) Direct connection of a snaphook to a horizontal lifeline;

(2) Two (or more) snaphooks connected to one D-ring;

(3) Two snaphooks connected to each other;

(4) Snaphooks connected directly to webbing, rope, or wire rope; and

(5) Improper dimensions of the D-ring, rebar, or other connection point in relation to the snaphook dimensions which would allow the snaphook gate to be depressed by a turning motion of the snaphook.

(n) *Free fall considerations.* Employers and employees should always be aware that a system's maximum arresting force is evaluated under normal use conditions established by the manufacturer, and in no case using free fall distance in excess of 6 feet (1.8 m). Even a few additional feet of free fall can significantly increase the arresting force on the employee, possibly to the point of causing injury and possibly exceeding the strength of the system. Because of this, the free fall distance should be kept to a minimum, and, as required by § 1910.140(d)(2), must never be greater than 6 feet (1.8 m). To assure this, the tie-off attachment point to the lifeline or anchor should be located at or above the connection point of the fall arrest equipment to the harness. (Otherwise, additional free fall distance is added to the length of the connecting means (*i.e.,* lanyard)). Tying off to the walking-working surface will often result in a free fall greater than 6 feet (1.8 m). For instance, if a 6-foot (1.8-m) lanyard is used, the total free fall distance will be the distance from the walking-working level to the harness connection plus the 6 feet (1.8 m) of lanyard.

(o) *Elongation and deceleration distance considerations.* During fall arrest, a lanyard will stretch or elongate, whereas activation of a deceleration device will result in a certain stopping distance. These distances should be available with the lanyard or device's instructions and must be added to the free fall distance to arrive at the total fall distance before an employee is fully stopped. The additional stopping distance may be significant if the lanyard or deceleration device is attached near or at the end of a long lifeline, which may itself add considerable distance due to its own elongation. As required by § 1910.140(d)(2), sufficient distance to allow for all of these factors must also be maintained between the employee and obstructions below, to prevent an injury due to impact before the system fully arrests the fall. In addition, a minimum of 12 feet (3.7 m) of lifeline should be allowed below the securing point of a rope-grab-type deceleration device, and the end terminated to prevent the device from sliding off the lifeline. Alternatively, the lifeline should extend to the ground or the next working level below. These measures are suggested to prevent the employee from inadvertently moving past the end of the lifeline and having the rope grab become disengaged from the lifeline.

(p) *Obstruction considerations.* In selecting a location for tie-off, employers and employees should consider obstructions in the potential fall path of the employee. Tie-offs that minimize the possibilities of exaggerated swinging should be considered.

Appendix D to Subpart I—Test Methods and Procedures for Personal Fall Protection Systems Non-Mandatory Guidelines

This appendix contains test methods for personal fall protection systems which may be used to determine if they meet the system performance criteria specified in paragraphs (d) and (e) of § 1910.140.

Test Methods for Personal Fall Arrest Systems (Paragraph (d))

(a) *General.* The following sets forth test procedures for personal fall arrest systems as defined in paragraph (d) of § 1910.140.

(b) *General test conditions.*

(1) Lifelines, lanyards and deceleration devices should be attached to an anchorage and connected to the body harness in the same manner as they would be when used to protect employees.

(2) The fixed anchorage should be rigid, and should not have a deflection greater than 0.04 inches (1 mm) when a force of 2,250 pounds (10 kN) is applied.

(3) The frequency response of the load measuring instrumentation should be 120 Hz.

(4) The test weight used in the strength and force tests should be a rigid, metal cylindrical or torso-shaped object with a girth of 38 inches plus or minus 4 inches (96 cm plus or minus 10 cm).

(5) The lanyard or lifeline used to create the free fall distance should be supplied with the system, or in its absence, the least elastic lanyard or lifeline available should be used with the system.

(6) The test weight for each test should be hoisted to the required level and should be quickly released without having any appreciable motion imparted to it.

(7) The system's performance should be evaluated, taking into account the range of environmental conditions for which it is designed to be used.

(8) Following the test, the system need not be capable of further operation.

(c) *Strength test.*

(1) During the testing of all systems, a test weight of 300 pounds plus or minus 3 pounds (136.4 kg plus or minus 1.4 kg) should be used. (*See* item number 4 of paragraph (b)of this appendix.)

(2) The test consists of dropping the test weight once. A new unused system should be used for each test.

(3) For lanyard systems, the lanyard length should be 6 feet plus or minus 2 inches (1.83 plus or minus 5 cm) as measured from the fixed anchorage to the attachment on the body harness.

(4) For rope-grab-type deceleration systems, the length of the lifeline above the centerline of the grabbing mechanism to the lifeline's anchorage point should not exceed 2 feet (0.61 m).

(5) For lanyard systems, for systems with deceleration devices which do not automatically limit free fall distance to 2 feet (0.61 m) or less, and for systems with deceleration devices which have a connection distance in excess of 1 foot (0.3 m) (measured between the centerline of the lifeline and the attachment point to the body harness), the test weight should be rigged to free fall a distance of 7.5 feet (2.3 m) from a point that is 1.5 feet (46 cm) above the anchorage point, to its hanging location (6 feet below the anchorage). The test weight should fall without interference, obstruction, or hitting the floor or ground during the test. In some cases a non-elastic wire lanyard of sufficient length may need to be added to the system (for test purposes) to create the necessary free fall distance.

(6) For deceleration device systems with integral lifelines or lanyards that automatically limit free fall distance to 2 feet (0.61 m) or less, the test weight should be rigged to free fall a distance of 4 feet (1.22 m).

(7) Any weight that detaches from the harness should constitute failure for the strength test.

(d) *Force test*—(1) *General.* The test consists of dropping the respective test weight specified in (d)(2)(i) or (d)(3)(i) once. A new, unused system should be used for each test.

(2) *For lanyard systems.* (i) A test weight of 220 pounds plus or minus three pounds (100 kg plus or minus 1.6 kg) should be used. (*See* item number 4 of paragraph (b) above.)

(ii) Lanyard length should be 6 feet plus or minus 2 inches (1.83 m plus or minus 5 cm) as measured from the fixed anchorage to the attachment on the body harness.

(iii) The test weight should fall free from the anchorage level to its hanging location (a total of 6 feet (1.83 m) free fall distance) without interference, obstruction, or hitting the floor or ground during the test.

(3) *For all other systems.* (i) A test weight of 220 pounds plus or minus 2 pounds (100 kg plus or minus 1.0 kg) should be used. (*See* item number 4 of paragraph (b) of this appendix.)

(ii) The free fall distance to be used in the test should be the maximum fall distance physically permitted by the system during normal use conditions, up to a maximum free fall distance for the test weight of 6 feet (1.83 m), except as follows:

(A) For deceleration systems having a connection link or lanyard, the test weight should free fall a distance equal to the connection distance (measured between the centerline of the lifeline and the attachment point to the body harness).

(B) For deceleration device systems with integral lifelines or lanyards that automatically limit free fall distance to 2 feet (0.61 m) or less, the test weight should free fall a distance equal to that permitted by the system in normal use. (For example, to test a system with a self-retracting lifeline or lanyard, the test weight should be supported and the system allowed to retract the lifeline or lanyard as it would in normal use. The test weight would then be released and the force and deceleration distance measured).

(4) *Failure.* A system fails the force test when the recorded maximum arresting force exceeds 2,520 pounds (11.2 kN) when using a body harness.

(5) *Distances.* The maximum elongation and deceleration distance should be recorded during the force test.

(e) *Deceleration device tests*—(1) *General.* The device should be evaluated or tested under the environmental conditions (such as rain, ice, grease, dirt, and type of lifeline) for which the device is designed.

(2) *Rope-grab-type deceleration devices.* (i) Devices should be moved on a lifeline 1,000 times over the same length of line a distance of not less than 1 foot (30.5 cm), and the mechanism should lock each time.

(ii) Unless the device is permanently marked to indicate the type of lifelines that must be used, several types (different diameters and different materials), of lifelines should be used to test the device.

(3) *Other self-activating-type deceleration devices.* The locking mechanisms of other self-activating-type deceleration devices designed for more than one arrest should lock each of 1,000 times as they would in normal service.

Test Methods for Positioning Systems (Paragraph (e))

(a) *General.* The following sets forth test procedures for positioning systems as defined in paragraph (e) of § 1910.140. The requirements in this appendix for personal fall arrest systems set forth procedures that may be used, along with the procedures listed below, to determine compliance with the requirements for positioning systems.

(b) *Test conditions.*

(1) The fixed anchorage should be rigid and should not have a deflection greater than 0.04 inches (1 mm) when a force of 2,250 pounds (10 kN) is applied.

(2) For window cleaner's belts, the complete belt should withstand a drop test consisting of a 250 pound (113 kg) weight falling free for a distance of 6 feet (1.83 m). The weight should be a rigid object with a girth of 38 inches plus or minus 4 inches (96 cm plus or minus 10 cm). The weight should be placed in the waistband with the belt buckle drawn firmly against the weight, as when the belt is worn by a window cleaner. One belt terminal should be attached to a rigid anchor and the other terminal should hang free. The terminals should be adjusted to their maximum span. The weight fastened in the freely suspended belt should then be lifted exactly 6 feet (1.83 m) above its "at rest" position and released so as to permit a free fall of 6 feet (1.83 m) vertically below the point of attachment of the terminal anchor. The belt system should be equipped with devices and instrumentation capable of measuring the duration and magnitude of the arrest forces. Failure of the test should consist of any breakage or slippage sufficient to permit the weight to fall free of the system. In addition, the initial and subsequent arresting forces should be measured and should not exceed 2,000 pounds (8.5 kN) for more than 2 milliseconds for the initial impact, or exceed 1,000 pounds (4.5 kN) for the remainder of the arrest time.

3. All other positioning systems (except for restraint line systems) should withstand a drop test consisting of a 250 pound (113 kg) weight free falling a distance of 4 feet (1.2 m). The weight shall be a rigid object with a girth of 38 inches plus or minus 4 inches (96 cm plus or minus 10 cm). The body belt or harness should be affixed to the test weight as it would be to an employee. The system should be connected to the rigid anchor in the manner that the system would be connected in normal use. The weight should be lifted exactly 4 feet (1.2 m) above its "at rest" position and released so as to permit a vertical free fall of 4 feet (1.2 m). Failure of the system should be indicated by any breakage or slippage sufficient to permit the weight to fall free to the ground.

Subpart N—[Amended]

12. Revise the authority citation for subpart N of part 1910 to read as follows:

Authority: Secs. 4, 6, 8, Occupational Safety and Health Act of 1970 (29 U.S.C. 653, 655, 657); Secretary of Labor's Order No. 12–71 (36 FR 8754), 8–76 (41 FR 25059) 9–83 (48 FR 35736), 1–90 (55 FR 9033), 6–96 (62 FR 111), 3–2000 (65 FR 50017), 5–2002 (67 FR 65008), or 5–2007 (72 FR 31159), as applicable.

Section 1910.178 also amended under section 4 of the Administrative Procedure Act (5 U.S.C. 653).

Sections 1910.176, 1910.177, 1910.178, 1910.179, 1910.180, 1910.181, and 1910.184 also issued under 29 CFR part 1911.

13. In § 1910.178, revise paragraph (j) to read as follows:

§ 1910.178 Powered industrial trucks.

* * * * *

(j) *Dockboards (bridge plates). See* subpart D of this part.

14. In § 1910.179, revise paragraphs (c)(2), (d)(3), and (d)(4)(iii) to read as follows:

§ 1910.179 Overhead and gantry cranes.

* * * * *

(c) * * *

(2) *Access to crane.* Access to the car and/or bridge walkway shall be by a conveniently placed fixed ladder, stairs, or platform requiring no step over any gap exceeding 12 inches (30 cm). Fixed ladders shall be in conformance with subpart D of this part.

* * * * *

(d) * * *

(3) *Toeboards and handrails for footwalks.* Toeboards and handrails shall be in compliance with subpart D of this part.

(4) * * *

(iii) Ladders shall be permanently and securely fastened in place and shall be constructed in compliance with subpart D of this part.

* * * * *

15. Revise the authority citation for subpart R of part 1910 to read as follows:

Authority: Secs. 4, 6, 8, Occupational Safety and Health Act of 1970 (29 U.S.C. 653, 655, 657); Secretary of Labor's Order No. 12–71 (36 FR 8754), 8–76 (41 FR 25059) 9–83 (48 FR 35736), 1–90 (55 FR 9033), 6–96 (62 FR 111), 3–2000 (65 FR 50017), 5–2002 (67 FR 65008), or 5–2007 (72 FR 31159), as applicable; and 29 CFR part 1911.

16. In § 1910.261, revise paragraphs (c)(15)(ii), (e)(4), (g)(2)(ii), (g)(13)(i), (h)(1), (j)(4)(iii), (j)(5)(i), (k)(6), (k)(13)(i) and (k)(15) to read as follows:

§ 1910.261 Pulp, paper and paperboard mills.

* * * * *

(c) * * *

(15) * * *

(ii) Where conveyors cross passageways or roadways, a horizontal platform shall be provided under the conveyor, extended out from the sides of the conveyor a distance equal to 1½ times the length of the wood handled. The platform shall extend the width of the road plus 2 feet (61 cm) on each side, and shall be kept free of wood and rubbish. The edges of the platform shall be provided with toeboards or other protection to prevent wood from falling, in accordance with subpart D of this part.

* * * * *

(e) * * *

(4) *Runway to the jack ladder.* The runway from the pond or unloading dock to the table shall be protected with standard handrails and toeboards. Inclined portions shall have cleats or equivalent nonslip surfacing in

accordance with subpart D of this part. Protective equipment shall be provided for persons working over water.

* * * * *

(g) * * *

(2) * * *

(ii) The worker shall be provided with eye protection, a supplied air respirator and a personal fall protection system meeting the requirements of subpart I of this part during inspection, repairs or maintenance of acid towers. The line shall be extended to an attendant stationed outside the tower opening.

* * * * *

(13) * * *

(i) Blow-pit openings preferably shall be on the side of the pit instead of on the top. Openings shall be as small as possible when located on top, and shall be protected in accordance with subpart D of this part.

* * * * *

(h) * * *

(1) *Bleaching engines.* Bleaching engines, except the Bellmer type, shall be completely covered on the top, with the exception of one small opening large enough to allow filling, but too small to admit an employee. Platforms leading from one engine to another shall have standard guardrails in accordance with subpart D of this part.

* * * * *

(j) * * *

(4) * * *

(iii) When beaters are fed from the floor above, the chute opening, if less than 42 inches (1.06 m) from the floor, shall be provided with a guardrail system meeting the requirements of subpart D of this part, or other equivalent enclosures. Openings for manual feeding shall be sufficient only for entry of stock, and shall be provided with at least two permanently secured crossrails or other fall protection system that meet the requirements of subpart D of this part.

* * * * *

(5) * * *

(i) All pulpers having the top or any other opening of a vessel less than 42 inches (107 cm) from the floor or work platform shall have such openings guarded by guardrail systems meeting the requirements of subpart D of this part, or other equivalent enclosures. For manual changing, openings shall be sufficient only to permit the entry of stock, and shall be provided with at least two permanently secured crossrails, or other fall protection systems meeting the requirements of subpart D of this part.

* * * * *

(k) * * *

(6) *Steps.* Steps of uniform rise and tread with nonslip surfaces conforming to subpart D of this part shall be provided at each press.

* * * * *

(13) * * *

(i) A guardrail complying with subpart D of this part shall be provided at broke holes.

(15) *Steps.* Steps or ladders complying with subpart D of this part and tread with nonslip surfaces shall be provided at each calendar stack. Handrails and hand grips complying with subpart D of this part shall be provided at each calendar stack.

* * * * *

§ 1910.262 [Amended]

17. In paragraph (r) of § 1910.262 remove the term "§ 1910.23" and replace it with the term "subpart D to this part".

§ 1910.265 [Amended]

18. In paragraph (c)(5)(i) of § 1910.265, remove the term "§ 1910.24" and replace it with the term "subpart D to this part".

19. Revise paragraphs (c)(4)(v) and (f)(6) of § 1910.265 to read as follows:

§ 1910.265 Sawmills.

* * * * *

(c) * * *

(4) * * *

(v) *Elevated platforms.* Where elevated platforms are used routinely on a daily basis, they shall be equipped with stairways or fixed ladders, conforming to subpart D of this part.

* * * * *

(f) * * *

(6) *Ladders.* A fixed ladder complying with the requirements of subpart D of this part, or other adequate means, shall be provided to permit access to the roof. Where controls and machinery are mounted on the roof, a permanent stairway with standard handrail shall be installed in accordance with the requirements of subpart D of this part.

* * * * *

20. In § 1910.268:

A. Revise paragraphs (g)(1);

B. Remove paragraph (g)(2);

C. Redesignate (g)(3) as (g)(2); and

D. Revise paragraph (h).

§ 1910.268 Telecommunications.

* * * * *

(g) *Personal climbing equipment*—(1) *General.* A positioning system or a personal fall arrest system shall be provided and the employer shall ensure their use when work is performed at positions more than 4 feet (1.2 m) above the ground, on poles, and on towers, except as provided in paragraph (n)(7) and (n)(8) of this section. These systems shall meet the applicable requirements set forth in subpart I of this part. The employer shall ensure that all climbing equipment is inspected before each day's use to determine that it is in safe working condition.

* * * * *

(h) *Ladders.* Ladders, step bolts, and manhole steps shall meet the applicable requirements of subpart D of this part.

* * * * *

21. In § 1910.269, revise paragraphs (g)(1) and (g)(2) to read as follows:

§ 1910.269 Electric power generation, transmission, and distribution.

* * * * *

(g) Personal protective equipment (1) Personal fall arrest equipment, work positioning equipment, or travel restricting equipment shall be used by employees working at elevated locations more than 4 feet (1.2 m) above the ground on poles, towers, or similar structures if other fall protection has not been provided. Fall protection equipment is not required to be used by a qualified employee climbing or changing location on poles, towers, or similar structures, unless conditions, such as, but not limited to, ice, high winds, the design of the structure (for example, no provision for holding on with hands), or the presence of contaminants on the structure, could cause the employee to lose his or her grip or footing.

Note 1 to paragraph (g)(1) of this section: This paragraph applies to structures that support overhead electric power generation, transmission, and distribution lines and equipment. It does not apply to portions of buildings, such as loading docks, to electric equipment, such as transformers and capacitors, nor to aerial lifts. Requirements for fall protection associated with walking and working surfaces are contained in subpart D of this part; requirements for fall protection associated with aerial lifts are contained in 1910.67 of this part.

Note 2 to paragraph (g)(1) of this section: Employees undergoing training are not considered "qualified employees" for the purposes of this provision. Unqualified employees (including trainees) are required to use fall protection any time they are more than 4 feet (1.2 m) above the ground.

(2) Personal protective equipment shall meet the requirements of subpart I of this part.

* * * * *

[FR Doc. 2010–10418 Filed 5–21–10; 8:45 am]

BILLING CODE 4510–29–P

Federal Register

Monday,
May 24, 2010

Part III

Consumer Product Safety Commission

16 CFR Part 1102

Publicly Available Consumer Product Safety Information Database; Proposed Rule

CONSUMER PRODUCT SAFETY COMMISSION

16 CFR Part 1102

Publicly Available Consumer Product Safety Information Database

AGENCY: Consumer Product Safety Commission.

ACTION: Notice of proposed rulemaking.

SUMMARY: The Consumer Product Safety Commission ("Commission," "CPSC," or "we") is issuing a notice of proposed rulemaking that would establish a publicly available consumer product safety information database ("database"). Section 212 of the Consumer Product Safety Improvement Act of 2008 ("CPSIA") amended the Consumer Product Safety Act ("CPSA") to require the Commission to establish and maintain a publicly available, searchable database on the safety of consumer products, and other products or substances regulated by the Commission. The proposed rule would interpret various statutory requirements pertaining to the information to be included in the database and also would establish provisions regarding submitting reports of harm; providing notice of reports of harm to manufacturers; publishing reports of harm and manufacturer comments in the database; and dealing with confidential and materially inaccurate information.

DATES: Written comments must be received by July 23, 2010.

ADDRESSES: You may submit comments, identified by Docket No. CPSC–2010–0041, by any of the following methods:

Electronic Submissions

Submit electronic comments in the following way:

Federal eRulemaking Portal: http://www.regulations.gov. Follow the instructions for submitting comments.

To ensure timely processing of comments, the Commission is no longer accepting comments submitted by electronic mail (e-mail) except through *http://www.regulations.gov.*

Written Submissions

Submit written submissions in the following way:

Mail/Hand delivery/Courier (for paper, disk, or CD–ROM submissions), preferably in five copies, to: Office of the Secretary, Consumer Product Safety Commission, Room 502, 4330 East West Highway, Bethesda, MD 20814; telephone (301) 504–7923.

Instructions: All submissions received must include the agency name and docket number for this notice of proposed rulemaking. All comments received may be posted without change, including any personal identifiers, contact information, or other personal information provided, to *http://www.regulations.gov.* Do not submit confidential business information, trade secret information, or other sensitive or protected information electronically. Such information should be submitted in writing.

Docket: For access to the docket to read background documents or comments received, go to *http://www.regulations.gov.*

FOR FURTHER INFORMATION CONTACT: Mary Kelsey James, Director, Information Technology Policy and Planning, Consumer Product Safety Commission, 4330 East West Highway, Bethesda, MD 20814; telephone (301) 504–7213; *mjames@cpsc.gov.*

SUPPLEMENTARY INFORMATION:

I. Background

The CPSIA requires the Commission to establish and maintain a product safety information database that is available to the public. Specifically, section 212 of the CPSIA amended the CPSA to create a new section 6A of the CPSA, titled "Publicly Available Consumer Product Safety Information Database." Section 6A(a)(1) of the CPSA requires the Commission to establish and maintain a database on the safety of consumer products, and other products or substances regulated by the Commission. The database must be publicly available, searchable, and accessible through the Commission's Web site. Section 6A of the CPSA sets forth specific content, procedures, and search requirements for the publicly available database. In this proposed rule, the Commission sets forth its interpretation of the statutory requirements of section 6A.

For several decades, the Commission has gathered and maintained a database of consumer complaints known as consumer product incident reports involving a description of incidents related to the use of consumer products that fall within the scope of the Commission's jurisdiction. Pursuant to section 5(a) of the CPSA, the Commission collects information related to the causes and prevention of death, injury, and illness associated with consumer products. The Commission conducts studies and investigations of deaths, injuries, diseases, other health impairments, and economic losses resulting from accidents involving consumer products. Also, pursuant to section 5(b) of the CPSA, the Commission may conduct research, studies, and investigations on the safety of consumer products and on improving the safety of such products. Currently, the Commission obtains information about product-related deaths, injuries, and illnesses from a variety of sources, including newspapers, death certificates, consumer complaints, and hospital emergency rooms. In addition, the Commission receives information from the public through its Internet Web site through forms reporting on product-related injuries or incidents. The data that the Commission collects and maintains on product safety has not been immediately available and searchable by the public. Before the CPSIA's enactment, the CPSA required that the Commission follow the notice provisions of section 6 of the CPSA before publicly disclosing any information that allowed the public to readily ascertain the identity of a manufacturer or private labeler of a consumer product. Section 6 of the CPSA contains requirements for giving notice of such information to the manufacturer or private labeler and providing an opportunity to comment on the information prior to public disclosure. Section 6 of the CPSA also requires the Commission to take reasonable steps to assure that disclosure of such information is accurate, fair in the circumstances, and reasonably related to effectuating the purposes of the CPSA. The Commission has applied the requirements in section 6 of the CPSA to Freedom of Information Act (FOIA) requests as well. *See Consumer Product Safety Commission et al.* v. *GTE Sylvania,* 447 U.S. 102 (1980). The Commission issued regulations interpreting the section 6 requirements at 16 CFR part 1101. Thus, consumers currently have access to incident data through reports and studies published by the Commission or through information provided in response to FOIA requests.

As stated earlier in part I of this document, section 6A of the CPSA requires the establishment and maintenance of a publicly available and searchable database. Section 6A of the CPSA specifically excludes any report submitted pursuant to the public database provisions from the notice requirements of section 6(a) and (b) of the CPSA.

Accordingly, the Commission invited input from its stakeholders before developing the proposed rule. A summary of the CPSC's work done to date on the public database, including a Report to Congress, Public Meetings, **Federal Register** Notices, Commission Actions and Public Comments, are

available on the CPSC Web site at *http://www.cpsc.gov/about/cpsia/sect212.html.*

On September 10, 2009, pursuant to section 6A(a)(2) of the CPSA, the Commission submitted a detailed implementation plan for the public database to Congress. The plan, titled "Implementation of a Searchable Consumer Product Safety Incident Database," set forth the Commission's strategy for establishing and maintaining the public database, including plans for the operation, content, maintenance, and functionality of the database. It also described the CPSC's plans for a public awareness campaign to promote the database, and contained an implementation schedule. Pursuant to section 6A(a)(3) of the CPSA, the Commission must establish the public database no later than eighteen months after submission of its detailed implementation plan to Congress, or by March 2011.

On November 10, 2009, the Commission held a public hearing regarding the establishment of a public consumer product safety incident database. Consumer groups, trade associations, research groups, and industry discussed their views on implementation of the public database. Written statements also were accepted. We received fourteen comments, and these comments are available on the CPSC's Web site at *http://www.cpsc.gov/library/foia/foia10/pubcom/pubdb.pdf.* A Webcast of the hearing can be viewed on the CPSC's Web site at *http://www.cpsc.gov/webcast/previous.html.* Issues presented at the hearing are discussed and responded to in more detail in section IV of this document below.

On January 11 and 12, 2010, the Commission staff hosted a two-day workshop to discuss implementation of section 6A of the CPSA, including data analysis and reporting; reports of harm; manufacturer notification and response; additional database content, and materially inaccurate information. A transcript of the workshops is available at *http://www.cpsc.gov/about/cpsia/pw01112010am.html,* and a Webcast of the workshops is available on the CPSC's Web site at *http://saferproducts.gov/events/pw01112010.html.* The CPSC also invited comments in conjunction with the workshop. We received twenty-two comments, and we summarize and respond to those comments in section IV of this document below.

II. Statutory Authority

The Commission is issuing this proposed rule pursuant to section 3 of the CPSIA which provides the Commission authority to issue regulations, as necessary, to implement the CPSIA.

III. Description of the Proposed Rule

The proposed rule would establish a new 16 CFR part 1102, "Publicly Available Consumer Product Database." The new part would consist of four subparts:

- Subpart A—Background and Definitions;
- Subpart B—Content Requirements;
- Subpart C—Procedural Requirements;
- Subpart D—Notice and Disclosure Requirements

We describe the provisions in each proposed subpart in detail immediately below in section III. A through D of this document.

A. Proposed Subpart A—Background and Definitions

1. Proposed § 1102.1—Purpose

Proposed § 1102.1 would describe the purpose of the new "Publicly Available Consumer Product Safety Information Database." In brief, the proposal would state that part 1102 sets forth the Commission's interpretation, policy, and procedures with regard to the creation and maintenance of a Consumer Product Safety Information Database.

2. Proposed § 1102.4—Scope

Proposed § 1102.4 would explain that the part 1102 applies to the content, procedure, notice, and disclosure requirements to be followed and all information published in the Consumer Product Safety Information Database.

3. Proposed § 1102.6—Definitions

Proposed § 1102.6 would define certain terms. As a general matter, proposed § 1102.4(a) would explain that, except as provided in proposed § 1102.6(b), the definitions set forth in section 3 of the CPSA apply. For example, section 3(a)(11) of the CPSA defines a "manufacturer" as "any person who manufactures or imports a consumer product." Because section 3(a)(11) of the CPSA defines "manufacturer," any reference to "manufacturer" in proposed part 1102 would have the same meaning.

Proposed § 1102.6(b) would define certain terms or, in some cases, interpret terms already defined in section 3 of the CPSA. For example, section 3(a)(5) of the CPSA defines "consumer product," in part, as "any article, or component part thereof, produced or distributed (i) for sale to a consumer for use in or around a permanent or temporary household or residence, a school, in recreation, or otherwise, or (ii) for the personal use, consumption or enjoyment of a consumer in or around a permanent or temporary household or residence, a school, in recreation, or otherwise * * *" However, proposed § 1102.6(b)(3) would define "consumer product" as having the same meaning as defined in the CPSA, but would further explain that "consumer product" includes any other products or substances regulated by the Commission under the CPSA, Federal Hazardous Substances Act, Flammable Fabrics Act, the Poison Prevention Packaging Act, the Children's Gasoline Burn Prevention Act, the Virginia Graeme Baker Pool and Spa Safety Act, and any other statute that the Commission enforces. This further clarification is based on the statutory requirement in section 6A(b)(1)(A) of the CPSA for submission of reports of harm relating to the use of consumer products and other products or substances regulated by the Commission.

Proposed § 1102.6(b)(1) would define "additional information" as any information, other than reports of harm, that the Commission determines is in the public interest to include in the Consumer Product Safety Information Database.

Proposed § 1102.6(b)(2) would define "Commission" or "CPSC' as meaning the Consumer Product Safety Commission.

Proposed § 1102.6(b)(4) would define "Consumer Product Safety Information Database" as the publicly available searchable information database on the safety of consumer products required to be established and maintained by the Commission.

Proposed § 1102.6(b)(5) would define "harm" as any injury, illness, or death, or any risk of injury, illness or death as determined by the Commission.

Proposed § 1102.6(b)(6) would define "mandatory recall notice" as any notice to the public ordered by the Commission pursuant to section 15(c) of the CPSA relating to action the Commission orders to be taken by any manufacturer, distributor, or retailer about a consumer product.

Proposed § 1102.6(b)(7) would define "manufacturer comment" as a comment made by a manufacturer or private labeler in response to a report of harm received through the public database and transmitted by the CPSC to the manufacturer or private labeler.

Proposed § 1102.6(b)(8) would define "report of harm" as any information submitted to the Commission through the manner described in § 1102.10(b) regarding an incident concerning an injury, illness or death, or any risk of

injury, illness or death as determined by the Commission relating to the use of the consumer product.

Proposed § 1102.6(b)(9) would define "submitter of a report of harm" as any person or entity that submits information to the Commission through the database regarding any injury, illness, or death, or any risk of injury, illness, or death as determined by the Commission relating to the use of a consumer product.

Proposed § 1102.6(b)(10) would define "voluntary recall notice" to mean any notice to the public relating to a voluntary corrective action taken by a manufacturer in consultation with the Commission where the Commission has notified the public of the manufacturer's voluntary corrective action.

B. Proposed Subpart B—Content Requirements

Proposed subpart B, "Content Requirements," would describe the database's contents. In general, section 6A(b) of the CPSA states that the database must include: (1) Reports of harm; (2) information derived by the Commission from notice under section 15(c), and any notice to the public relating to a voluntary corrective action taken by a manufacturer, in consultation with the Commission, of which the Commission has notified the public; and (3) manufacturer comments received by the Commission on a report of harm and requested for inclusion into the database. Proposed §§ 1102.10 through 1102.14 would describe how such reports, information, and comments would become part of the database, and proposed § 1102.16, "Additional information," would discuss information that the CPSC may add to the database when adding such information would be in the public interest. Reports of harm that fall outside the scope of CPSC regulatory authority will be referred to an appropriate agency or entity with notification of such action to the submitter.

1. Proposed § 1102.10—Reports of Harm

Proposed § 1102.10 would explain who may submit reports of harm in the public database. In brief, proposed § 1102.10(a) would identify those submitters specified in section 6A(b)(1)(A) of the CPSA and provide further clarification for those categories of persons that may fall within each of the identified groups. The list of persons under each group is not exclusive, and the proposed lists are intended to provide a greater understanding of the persons that could fall under each category. For example, "consumers" would include not only users of consumer products, but also family members, relatives, parents, guardians, friends, observers of a consumer product being used by another, and victims. The proposal would add a category of "other" to include those persons who may not clearly fit within the statutorily identified categories; for example, "other" persons would include, but not be limited to, attorneys, professional engineers, investigators, nongovernmental organizations, consumer advocates, consumer advocacy organizations, and trade associations.

Proposed § 1102.10(b) would describe how a report of harm can be submitted to the database. The proposal would describe four methods (internet, telephone, electronic mail, and paper) for submitting reports and when each submission will be construed as being complete. For example, proposed § 1102.10(b)(1) would explain that submitters using the Internet will use an electronic form specifically developed to collect the report of harm in the database. As another example, proposed § 1102.10(b)(2) would explain how submissions over the telephone will be accepted and proposed § 1102.10(b)(4) would explain how the Commission will deal with written submissions. Additionally, the proposal gives the Commission the flexibility to provide other means of submission if new ways subsequently become available.

Proposed § 1102.10(c) would describe potential size limits on reports of harm where the size of such reports of harm, including attachments, might negatively impact the technological or operational performance of the system.

Proposed § 1102.10(d)(1) through (d)(6) would describe the minimum requirements for publication of reports of harm in the database. The proposal identifies the required criteria of information that are referenced in section 6A(b)(2)(B)(i) through (v) of the CPSA and further elaborates on the type of information included under each category. For example, proposed § 1102.10(d)(1) would explain that a description of a consumer product must include a word or phrase sufficient to distinguish a product identified in a report of harm as a consumer product or a component of a consumer product or some other word or phrase to show it is a consumer product or a product or substance regulated by the Commission. This description could include the name (including the brand name) of the product. Other information, such as where the product was purchased, price paid, model, serial number, date of manufacture (if known), date code or retailer is described as information that would be helpful to the description of a consumer product.

Proposed § 1102.10(d)(2) would describe that a report of harm must contain the identity of the manufacturer or private labeler in order for the report to be published. This section would further explain that the name of any company information sufficient to distinguish an entity will satisfy the minimum identification requirement and that contact information such a mailing address, phone number, or electronic mail address would satisfy the identification requirement.

Proposed § 1102.10(d)(3) would explain that a description of harm should include a narrative that describes the harm or risk of harm. The proposal would contain a nonexclusive list of examples of the types of harm that could be included. The proposal would allow for a description to include a risk of harm where no actual harm occurred. However, this proposed section would also explain that information unrelated to bodily harm or a risk of bodily harm, such as information on cost or quality of a consumer product, will not satisfy the regulatory requirement for a description of harm. Information such as the date on which the harm occurred or manifested itself, the severity of any injury or whether medical treatment was sought is identified as helpful, but not required, information to include in a description.

Proposed § 1102.10(d)(4), (5), and (6) would describe the minimum requirements for contact information, verification, and consent of the report of harm by the submitter. For contact information, the proposed § 1102.10(c)(4) would require that a submitter of a report of harm provide his or her first and last name and a mailing address as required contact information for the report to be published. The proposed rule would explain that submitters of reports of harm also may provide other contact information, such as an electronic mail address or a telephone number, but that such information is not required in order to publish the report.

Proposed § 1102.10(d)(5) would explain that submitters must verify the report of harm for publication and the verification statement follows the statutory outline. Verification would involve a submitter of a report of harm affirmatively agreeing that he or she has reviewed the information submitted in a report of harm and then checking the box for verifying the information the report contains. This proposed section would also require that as part of verifying the report, submitters of

reports of harm must indicate what category they are in (consumer, government agency, health care professional, etc.)

Proposed § 1102.10(d)(6) would explain that the submitter of a report of harm must consent to inclusion of the report of harm in the database in order for the report to be published. If no consent is provided by the submitter the report will not be published.

Proposed § 1102.10(e) would describe the Commission's ability to seek other categories of voluntary information. The Commission seeks comment as to whether additional categories should include demographic data, such as race, or additional data about the product in question, such as whether the product still contained all of its original parts, or had been altered in any way not according to a manufacturer's instructions.

Proposed § 1102.10(f) would describe the information that will not be published in the database including the name and contact information of the submitter of a report of harm; the victim's name and contact information (if provided), photographs depicting a person or injury because of privacy concerns or because the Commission has determined that they are not in the public interest; medical records without the consent of the person about whom such records pertain (or that person's parent or guardian if the person is a minor); confidential information; materially inaccurate information; reports of harm retracted by submitters who indicate in writing to the Commission that they supplied materially inaccurate information; and/or any other material submitted on or with a report of harm that the Commission determines is not in the public interest to publish. This proposed section would identify criteria and explain that the public interest determination will be based on the criteria relating to whether or not the information helps database users to identify a consumer product; identify the manufacturer or private labeler of a consumer product; understand the risk of harm related to the use of a consumer product; or understand the relationship between the submitter of a report of harm and the victim. The Commission will examine privacy concerns based on the Privacy Act of 1974, Public Law 93–579, as amended.

Proposed § 1102.10(g) would state that reports of harm submitted by persons under the age of 18 must include the consent of the parent or guardian of that person. The rationale for requiring consent on reports by a minor is premised on the notion that age of legal consent in many jurisdictions is 18. Review of a report of harm by a parent or guardian will also ensure that information about a harm or risk of harm is being disclosed publicly with the parent's consent addressing concerns related to the privacy of such information. Further, if a parent or guardian reviews the report, consent may also improve the accuracy of the information the report contains.

Proposed § 1102.10(h) would explain that information received related to a report of harm that is incomplete because it does not meet the requirements for submission or publication will be maintained for appropriate Commission use.

Proposed § 1102.10(i) would explain that reports of harm accepted by the Commission become official records of the Commission in accordance with 16 CFR 1015.1 and that alteration (or disposition) of these records can only be undertaken in accordance with the procedures specified in this Part.

2. Proposed § 1102.12—Manufacturer Comments

Proposed § 1102.12(a) would state that manufacturers or private labelers who receive a report of harm transmitted from the CPSC may submit comments. Proposed § 1102.12(b) would propose that comments may be received via an online manufacturer portal where the manufacturer can register to submit comments on a secure nonpublic portal that will be provided through the Commission's database. The proposal also would specify that comments may be submitted via electronic mail or regular mail directed to the Commission's Office of the Secretary.

Proposed § 1102.12(c)(1) through (c)(4) would specify that the Commission will publish a manufacturer's comments related to a report of harm if the comment specifically relates to a report of harm, contains a unique identifier assigned to it, contains the manufacturer's verification of the truth and accuracy of their comment (similar to the verification required of a submitter of a report of harm) as well as their consent for publication in the database. The proposed rule would require a manufacturer to affirmatively request that its comment be published and to affirmatively consent to such publication in order for the manufacturer comment to be published in the database.

Proposed § 1102.12(d) would explain that the Commission will publish a manufacturer's comments and the date such comments are submitted to the CPSC in the database.

Proposed § 1102.12(e) would explain that the Commission will not publish the actual consents and verifications obtained from the manufacturer for such publication.

3. Proposed § 1102.14—Recall Notices

Proposed § 1102.14 would state that information in a voluntary or mandatory recall notice will be made accessible and searchable to the public in the database.

4. Proposed § 1102.16—Additional Information

Proposed § 1102.16 would describe the criteria to be used to determine any additional information that will be published in the database consistent with the requirements of section 6(a) and (b) of the CPSA.

C. Proposed Subpart C—Procedural Requirements

Proposed subpart C, "Procedural Requirements," would describe the procedural requirements set forth in section 6A(c) of the CPSA related to the manufacturer notification and transmission. This proposed subpart would explain the procedural requirements for CPSC transmission of reports of harm to an identified manufacturer or private labeler; a description of the opportunity for comment by the manufacturer or private labeler identified in reports of harm; how designations of confidential information should be submitted and the criteria for how they will be reviewed; how materially inaccurate information should be designated and what the Commission will consider in reviewing any such claim both before and after posting a report of harm in the database; the timing of posting reports of harm in the database; and the timing and posting of manufacturers' comments in the database.

1. Proposed § 1102.20—Transmission of Reports of Harm to Identified Manufacturer or Private Labeler

Proposed § 1102.20 would explain what information in a report of harm will and will not be transmitted to a manufacturer or private labeler. As set forth in section 6A(b)(2)(B) of the CPSA, the name and contact information of the submitter will not be transmitted to a manufacturer or private labeler unless the submitter of a report of harm consents to transmit this information. The proposed rule also would prevent transmission of any photographs submitted with the report of harm unless the submitter specifically consents, and further explains that medical records will not be provided

without explicit consent from the person to whom such records pertain, or his or her parent, guardian or legally authorized representative.

Proposed § 1102.20(b) would describe the limitation on use of contact information by a manufacturer or private labeler. The proposed regulatory text would incorporate the limitation in section 6A of the CPSA on the use of submitter contact information by the manufacturer for any purpose other than verification of information contained in a report of harm. The proposed rule would describe activities that will not be considered as verification including sales, promotion, marketing or warranty activities or activities relating to a commercial purpose of the manufacturer. The proposal also would describe what is considered a verification purpose by relating the statutory criteria required for a report of harm to be published. For example, proposed § 1102.20(b)(1) through (b)(4) would explain that verification could be related to the identity of the requester; the consumer product including name, serial or model number; the harm or risk of harm described in the report of harm; and/or a description of the incident related to the use of the consumer product.

Proposed § 1102.20(c) would explain the timing of transmission of reports of harm to the manufacturer. The proposal would adopt the statutory language that the reports will be transmitted to the manufacturer to the extent practicable within five business days after the Commission receives a completed report of harm. The proposal would identify circumstances where transmission of a report of harm to the manufacturer within five business days may be impracticable. The circumstances include: where the identified manufacturer or private labeler is out of business with no identifiable successor; the submitter misidentified the manufacturer or private labeler; the report of harm contained inaccurate or insufficient information for identification of a manufacturer or private labeler or when the Commission cannot locate valid contact information for a manufacturer or private labeler.

Proposed § 1102.20(d) would describe a method for transmission of reports of harm to a manufacturer or private labeler based on registration by the manufacturer or private labeler in the online manufacturer portal. The proposal also would explain that where a manufacturer or private labeler has not registered for electronic transmission, the Commission will send reports of harm through the United States mail to a firm's principal place of business, unless the Commission selects another equally effective method of transmission.

Proposed § 1102.20(e) would describe that the Commission may in its discretion limit the data size of comments, which may include attachments submitted, where such comments and attachments may negatively impact the technological or operational performance of the system.

Proposed § 1102.20(f) would describe the process of manufacturer registration and explains that registrants can select a preferred method for receiving reports of harm in the database. The proposal would require that a manufacturer or private labeler provide updated contact information and allows the registrant to select a specific method to receive reports of harm.

Proposed § 1102.20(g) would address manufacturer comments received after one year and would explain that a manufacturer or private labeler may comment on information received about a report of harm. The proposal would allow the Commission, in its discretion not to publish a manufacturer comment to the database that is received more than one year after transmission of the report of harm to the manufacturer or private labeler where it would not be in the public interest to do so. The proposal also would allow the Commission to limit the data size of comments, which may include attachments submitted where such comments and attachments may negatively impact the technological or operational performance of the system.

2. Proposed § 1102.24—Designation of Confidential Information

Proposed § 1102.24 would explain how the Commission will define "confidential information" and would set forth criteria which must be followed to assert a claim of confidentiality. The Commission notes that most reports of harm received from consumers will not likely contain confidential information. However, where such a claim for a portion of information on a report of harm is asserted, the proposal would require affirmative statements that would assist the Commission in an evaluation of the merits of the request.

Proposed § 1102.24(a) would interpret the terms "confidential information" in a manner similar to that in section 6(a) of the CPSA. The proposal would establish parameters for asserting and supporting a claim of a portion of a report of harm as confidential; these parameters follow closely the Commission's current practice and procedure for such assertions in a FOIA context.

Proposed § 1102.24(b) would explain that a manufacturer may designate portions of information contained in a report of harm as confidential and would describe, at paragraphs (b)(1) through (b)(6), the statements required to support the claim of confidential information. If these statements are missing from any request, the Commission will consider the request to be incomplete and unsupported. For example, proposed § 1102.24(b)(1) would explain that a manufacturer or private labeler is required to specifically designate those portions of the report of harm asserted to be confidential. Proposed § 1102.24(b)(2) would require information on whether the asserted confidential portion of a report has ever been released to any person who was not an employee or in a confidential relationship with the manufacturer or private labeler.

Proposed § 1102.24(b)(3) would require an explanation on whether the asserted confidential portion of the report is commonly known or readily ascertainable by outside persons with a minimum of time and effort. Proposed § 1102.24(b)(4) would require the manufacturer to explain the relationship, if any, between the submitter of the report of harm and the manufacturer or private labeler and how the submitter could have come into possession of such confidential information. Proposed § 1102.24(b)(5) would explain that the manufacturer also must support a confidentiality claim by describing how release of the information could cause competitive harm. Any portion of information in a report of harm designated by a manufacturer to be confidential but lacking the statements and information in section § 1101.24 (b)(1) through (b)(6) will not be considered confidential. Section 1101.24(b) also notes that the requester of a designation of confidential information bears the burden of proof regarding such a request.

Proposed § 1102.24(c) would describe the manner of submission where confidentiality is asserted for a designated portion of a report of harm. This proposal would allow submission of confidentiality assertions in the same manner as manufacturer comments described in proposed § 1102.12(b) and would require the requests to be conspicuously labeled.

Proposed § 1102.24(d) would explain that a request for confidential treatment be made at any time after CPSC transmission to the manufacturer of a report of harm.

Proposed § 1102.24(e) would explain that a request for confidentiality should only be made by those who intend in good faith, and so certify in writing, to assist in the defense of confidentiality by the Commission in any later judicial proceeding that could be sought to compel disclosure. This provision is similar to one found in the Commission's FOIA regulations concerning the assertion of confidentiality. The assertion of confidentiality must be legitimate, and the Commission believes that this provision requires firms to stand behind their assertion where the Commission is being sued to protect a firm's confidential information.

Proposed § 1102.24(f) and (g) would describe the procedure to notify the manufacturer or private labeler of determinations on the claim of confidentiality. Proposed § 1102.24(f) would state that, if a portion of a report is deemed confidential, the Commission will notify the manufacturer or private labeler, redact the information deemed confidential, and publish the report of harm as redacted in the database.

Proposed § 1102.24(g) would state that, if a portion of a report is not deemed confidential, the Commission will notify the manufacturer or private labeler of the Commission's determination and will publish the report of harm in the database.

Proposed § 1102.24(h) would explain the right of a manufacturer or private labeler to sue in the appropriate United States District Court to seek removal of alleged confidential information published in the Consumer Product Safety Database.

3. Proposed § 1102.26—Designation of Materially Inaccurate Information

Proposed § 1102.26 would contain definitions and the process for how claims of materially inaccurate information contained in reports of harm and manufacturer comments may be asserted and how they will be evaluated. Section 6A(c)(4) of the CPSA addresses materially inaccurate information in a report of harm as well as in a manufacturer's or private labeler's comments.

Proposed § 1102.26(a)(1) would define "materially inaccurate information in a report of harm" as information that is false or misleading in a significant and relevant way that it creates or has the potential to create a substantially erroneous or substantially mistaken belief about information in a report of harm. This proposed definition would tie the "substantially erroneous or substantially mistaken" element to required information in a report of harm, such as the identification of a consumer product, the identification of a manufacturer or private labeler, or the harm or risk of harm related to the use of the consumer product.

Proposed § 1102.26(a)(2) would define "materially inaccurate information in a manufacturer comment" similar to the definition used in a report of harm. This provision would explain such information as information that is false or misleading in a significant and relevant way that creates or has the potential to create a substantially erroneous or substantially mistaken belief about information in a manufacturer's comment. This proposed definition would tie the "substantially erroneous or substantially mistaken" element to information in a manufacturer or private labeler comment that creates a substantially erroneous or substantially mistaken belief about: (1) The nature, scope, liability or cause of a harm or risk of harm related to the use of a consumer product; (2) the status of a Commission, manufacturer, or private labeler investigation; (3) the identity of the firms responsible for importation and distribution and sale of a consumer product; (4) information about the corrective action that a manufacturer or private labeler is engaging in when such corrective action has not been approved by the Commission; or (5) information in a comment about whether the manufacturer has taken or promised to take any other action with regard to the product.

Proposed § 1102.26(b) would allow any person or entity to request that a report of harm or manufacturer comment or portions thereof be excluded from the database or corrected by the Commission because such report or comment contains materially inaccurate information as defined in proposed § 1102.26(a). This section would require, at paragraphs (b)(1) through (b)(7), the statements required in order to support the claim of materially inaccurate information. If these statements are missing from any request, the Commission would consider the request to be incomplete and unsupported. Should the Commission include in this section a "burden of proof" requirement and, if so, what should be the meaning of the term and what standard of proof would be imposed under it?

Proposed § 1102.26(c) would explain the manner of submission for manufacturers and private labelers and all other requesters. This would allow manufacturers to submit a claim in the same manner as a comment is submitted and would allow all other requesters to submit via electronic mail or written submission directed to the Office of the Secretary.

Proposed § 1102.26(d) would allow a request for a determination of materially inaccurate information to be submitted at any time. If a request for determination of materially inaccurate information is submitted prior to publication in the database, the Commission may withhold a report of harm from publication in the database until it makes a determination. Absent such a determination, the Commission will generally publish reports of harm on the tenth business day after transmitting a report of harm.

Proposed § 1102.26(e) would explain that a request for material inaccuracy should only be made by those who intend in good faith to assist in the defense of material inaccuracy by the Commission in any later judicial proceeding that could be sought to compel disclosure. This provision is similar to one found in the Commission's FOIA regulations concerning the assertion of confidentiality. The assertion of material inaccuracy must be legitimate and the Commission believes that this provision requires those seeking such a determination on information in a report of harm or manufacturer or private labeler comment to stand behind their assertion where the Commission is being sued to compel disclosure of such information.

Proposed § 1102.26(f) would describe the notice procedure the Commission will follow to notify the person or firm requesting a determination regarding materially inaccurate information of its determination and method of resolution after resolving such request.

Proposed § 1102.26(g) and (h) would outline the steps the Commission will take where it has made a determination of material inaccuracy. Proposed § 1102.26(g) would address a Commission determination where information in a report of harm or comment has not been published and would explain that the Commission may: (1) Decline to add the report of harm or manufacturer comment to the database; (2) correct the materially inaccurate information; or (3) add information to the report of harm to correct the materially inaccurate information.

Proposed § 1102.26(h) would address a Commission determination where information in a report of harm or comment has been published and would explain that the Commission may, after an investigation, determine that information in a report of harm or manufacturer comment contains

materially inaccurate information. The proposal would explain that the Commission shall, no later than seven business days of such determination: (1) Remove the report of harm or manufacturer comment, including any attachments, from the database; (2) correct the materially inaccurate information and if other minimum requirements for publication are met maintain the comment or report of harm in the database; or (3) add information to the report of harm or comment to correct the materially inaccurate information and if other minimum requirements for publication are met maintain the comment or report of harm in the database.

Proposed § 1102.26(i)(1) would state that the Commission's policy with respect to removing, correction, or adding information to correct materially inaccurate information is to preserve the integrity of the information received for publication in the database and that the Commission will favor correction and addition to correction, over exclusion of reports in the database. Proposed § 1102.26(i)(2) would create a means for expedited determinations of claims of materially inaccurate information for those requesters staying within the five page limit recommended at § 1102.26(c)(1) by stating that the Commission shall, where practicable, make an expedited determination after receipt of the manufacturer's request for a correction or exclusion. Additionally, proposed § 1102.26(c)(1) would explain that given the requirement in § 6A of the CPSA that reports of harm be published, the Commission will generally publish reports of harm on the tenth business day after transmitting a report of harm where either the recommended page limit has been exceeded or where the Commission is otherwise unable to make a determination regarding a claim of material inaccuracy prior to the statutorily mandated publication date.

Proposed § 1102.26(j) would explain that the Commission will notify the requester and publish the report of harm or manufacturer comment (if not already published) if it meets the minimum requirements.

Proposed § 1102.26(k) would provide the Commission the discretion to review a report of harm or a manufacturer comment for materially inaccurate information on its own initiative following the same notices and procedures set forth in (g) through (j).

4. Proposed § 1102.28—Publication of Reports of Harm

Proposed § 1102.28 would explain that reports of harm will be published in the database as soon as practicable, but no later than ten days after such report of harm is transmitted by the CPSC to the manufacturer or private labeler. This provision would explain that reports may be published beyond the ten day time frame when the report of harm misidentifies or fails to identify all manufacturers or private labelers. The information would have to be corrected through the procedures for materially inaccurate information at proposed § 1102.26.

5. Proposed § 1102.30—Publication of Manufacturer Comments

Proposed § 1102.30 would explain that the Commission will publish manufacturer comments that meet the minimum requirements in proposed § 1102.12(c) at the same time as a report of harm is published or as soon as practicable thereafter. The proposal would provide examples of circumstances which may make it impracticable to publish a manufacturer comment: (1) The Commission did not receive the comment until on or after the publication date of the report of harm or (2) the Commission is resolving a claim that the manufacturer comment contains materially inaccurate information.

D. Proposed Subpart D—Notice and Disclosure Requirements

This subpart would contain information on the disclaimers that will be part of the database and any information viewed on it as well as the applicability of section 6(a) and (b) of the CPSA.

1. Proposed § 1102.42—Disclaimers

Proposed § 1102.42 would set forth the type of disclaimer that will be used on the database and documents generated from it. This provision would require that the disclaimer be prominently and conspicuously displayed and that it be transmitted on any documents that are printed from the database.

2. Proposed § 1102.44—Applicability of Section 6(a) and (b) of the CPSA

Proposed § 1102.44(a) would explain that section 6(a) and (b) of the CPSA do not apply to the submission, disclosure, and publication of information provided in a report of harm. Proposed § 1102.44(b) would apply section 6(a) and (b) of the CPSA to information received by the Commission pursuant to section 15(b) of the CPSA and to information received by the Commission pursuant to any other voluntary or mandatory reporting program established between a retailer, manufacturer or private labeler.

IV. Comments on the Publicly Available Database and CPSC's Responses

We describe and respond to significant issues raised by the comments. To make it easier to identify comments and the Commission's responses, the word "Comment" will appear before each comment description, and the word "Response" will appear before the Commission's response. We have grouped comments based on their similarity and have numbered the comments to help distinguish between different comment themes. The number assigned to each comment summary is for organizational purposes and does not signify the comment's value, importance, or order in which it was received.

Subpart B—Content Requirements

Section 1102.10: Reports of Harm

1. CPSC asked whether any category of persons should be excluded from submitting reports of harm for inclusion in the public database, and, if so, by what means.

Comments (Summary 1)

Two commenters responded that no category of persons should be excluded from submitting reports of harm. Another commenter responded that third party submitters may be one or more degrees separated from the events involved in a report and encouraged CPSC to consider how this might affect assessment of information that could be materially inaccurate. This commenter suggested that there should be transparency regarding relationships surrounding reports and the person filing the report. One commenter stated that anonymous reports should not be published since they cannot be verified. Two commenters proposed that only reports from those groups specified in Section 6A(b)(1)(A)(i)–(v) should be considered for inclusion in the database, and the Commission should clearly and narrowly define these categories. One commenter suggested that the report form should ask submitters to identify to which group under 6A(b)(1)(A)(i)–(v) they belong. This commenter suggested that the CPSC should have a method for verifying that those filing reports are who they say they are. To assist in this, the commenter suggested that the CPSC should encourage submitters to consent to their contact information being shared with the manufacturer or private labeler.

Response

We note the breadth of the entities listed in the statute and conclude that the list is intended to be nonrestrictive.

Accordingly, we propose that, except for information collected through the National Electronic Injury Surveillance System (NEISS), which is information collected by selected hospital emergency rooms, and except for information collected through Death Certificates, all reports of harm (or "incident reports") related to use of a consumer product or other substance regulated by the Commission, be collected through the same incident report form, regardless of who is submitting the report of harm, and deposited into a central data warehouse for such information.

We propose that product-related incident information be collected from all sources, including anonymous sources, but that only those reports that meet the statutorily required minimum information as set forth in the statute be published for review and access in the publicly-searchable portion of the database.

We propose that a completed report for posting in the public database include verification of the information submitted and an indication as to whether consent has been given regarding the submitter's contact information being shared with the manufacturer or private labeler.

2. CPSC asked whether reports of harm submitted by telephone or paper should meet the same statutory time frames for submission in the public database.

Comment (Summary 2)

CPSC received five comments, including two from the same commenter, responding that regardless of the means of transmission, all reports of harm should adhere to the same statutory time frames for submission in the public database.

Response

We propose that in order to be included in the public database, all reports of harm, regardless of how they are received by the Commission, must meet certain minimum requirements, which includes, among other things, that reports be verified by the submitter for accuracy and that the submitter consent to inclusion of the report in the public database. We propose that paper submissions which do not follow the incident report form being developed for the CPSC Web site, be returned to the submitter for further completion, verification and consents.

We propose that the "not later than five business days" time frame for notifying a manufacturer or private labeler of a report of harm involving one of its consumer products will not start to run until the CPSC receives a verified report of harm from the submitter of the report of harm.

3. CPSC asked what a description of the consumer product should entail and why.

Comment (Summary 3)

For the most part, all of the commenters responded that some combination of the following would provide a description of the consumer product: Brand name, category of product (using an auto-fill function or drop-down menus), model number, serial number, and a text description of the product. One commenter responded that the brand name (incl. "unknown"), category of product (auto-fill list), model number, serial number, serial/series number/code, manufacturer's identification, the date the item was purchased, where the item was purchased, country of origin, manufacturer/distributor/private labeler name, UPC code, and a text description of the product should be included. Two commenters suggested that industry should be encouraged to provide CPSC with product-identification information that can be incorporated into the database because the greater the specificity in product identification, the greater the ability of CPSC and manufacturers to identify trends and patterns in the reports it receives. Three commenters suggested that the database should permit submitters to upload photos and/or supporting documentation of the products related to the incident. One commenter suggested that CPSC should work with stakeholders to develop guidelines as to types of photos and/or supporting documentation that would and would not be permitted to be included in the database.

Response

We agree with the majority of the comments and have begun incorporating many of the recommendations into the development of the public database. The incident report input screens being developed incorporate auto-fill functions, drop-down menus, and text fields where appropriate. For example, an auto-fill function will be provided for brand name, model name or number, manufacturer name, retailer name, and similar fields based on information we have collected in our database library, which will grow over time. Drop-down menus will be used for fields such as product category and type; injury severity, type, and location; and state and country codes. Text fields will be available for incident description and product description.

The incident report form is being designed to provide on-line help to assist submitters with locating the product identification information such as brand name, model number, manufacturer name, and manufacture date code. The staff explored the feasibility of collecting detailed product identification information from the industry but ultimately decided that given the pace of change and dynamic nature of the consumer product universe, central maintenance of such information would be infeasible. The incident report will allow submitters to attach photos and other approved file formats to supplement their report.

4. CPSC asked what contact information must be provided, at minimum, to meet the statutory requirement for inclusion in the database.

Comment (Summary 4)

All of the commenters agreed that a submitter should provide a name and address. Some of the commenters suggested that submitters should have to provide a telephone number and/or an e-mail address as a secondary means of contact. One commenter also stated that when submitted online, the submitter should be asked to submit an e-mail address, and that when submitted via telephone, the submitter should be asked to provide a telephone number, but that submitters should be encouraged to submit a phone number and/or an e-mail address regardless of the method of submission. This commenter also stated that if a report is made on behalf of a minor, the information provided should be provided by the parent or guardian of that minor.

Response

We propose that the minimum contact information that must be provided by a submitter of a report of harm for inclusion in the public database be the submitter's first name, last name, and complete mailing address. Additionally, submitters will be strongly encouraged to enter an e-mail address and/or a telephone number for follow-up purposes.

We also propose that minors under the age of 18 not be allowed to submit a report of harm to the public database without the consent of a parent or guardian as the named contact person.

5. CPSC asked how the report form should address the issue of the submitter's verification of the information submitted.

Comments (Summary 5)

All of the commenters agreed that submitters should have to take affirmative steps to verify the accuracy of the submission. One commenter suggested that verification and consent should be obtained separately (*e.g.,* two separate questions) and that the CPSC should employ a procedure similar to that currently utilized by the Clearinghouse wherein a completed report of harm and verification would be mailed to the consumer which the consumer would then mail back. This commenter also suggested that the CPSC should consider sending an automated verification message to the submitter's e-mail address when submitted online, as this would allow the submitter to review the report, and require the submitter to respond to the message to verify the report and consent to its inclusion in database. Reports submitted by telephone should receive the submitter's verification and consent in writing, as per the current Clearinghouse procedure.

However, one commenter suggested that submitters who provide their reports via telephone should be able to verify truth and accuracy of statements over the telephone with CPSC staff. The same commenter proposed that unconfirmed or anonymous reports should, minimally, affirmatively acknowledge verification.

Response

We propose that for each incident report submitted on-line, the submitter be prompted to affirmatively check a box indicating that they have reviewed the report and that they are verifying that the information contained in the report is true and accurate to the best of their knowledge. This same or similar statement mechanism will appear on e-mail and paper-based forms for verification purposes, although the paper-based form may also require the submitter's signature. We propose that in the case of telephone submissions, CPSC mail or e-mail the completed form to the submitter for review and verification, including requiring the submitter's verification.

6. CPSC asked how the report form should address the submitter's consent for: (i) Inclusion in the public database; and (ii) release of contact information to the manufacturer or private labeler, and whether there were any other issues related to the user's consent that the CPSC should consider.

Comment (Summary 6)

All of the commenters on this issue suggested that CPSC should utilize simple check boxes on the report form. Specifically, one commenter proposed that consent for inclusion should be required but release of contact information should be optional. This commenter also stated that the report form should clearly state that contact information will not be released to the public. This commenter also suggested that next to the check box for release of contact information to the manufacturer, the report form should include a statement that CPSC encourages consumers to cooperate with investigations.

Response

We propose that consent of release of information be obtained separately from verification. We propose the following consents be obtained separately on the form: Consent to include information in the public database; consent to release of contact information to the manufacturer or private labeler; and, for requests received through FOIA, consent to release contact information to the general public.

7. CPSC asked what, if any, measures should the agency employ to prevent the submission of fraudulent reports of harm while not discouraging the submission of valid reports.

Comments (Summary 7)

All of the commenters on this issue expressed concern about the prevention of fraudulent reports of harm. Several commenters suggested a check box function expressly certifying the accuracy of the information in the report of harm but with reminders of the implications for submitting fraudulent or inaccurate information.

Two commenters were concerned about Web-based robots spamming the database, and one suggested a security feature similar to those used on ticket Web sites (*e.g.,* requiring the user to type a combination of letters and numbers appearing on screen) to ensure that an automated "robot" is not spamming the database with bogus information. One commenter suggested that submitters should be required to affirmatively include a verification statement in narrative format as part of their description of the incident. One commenter stated that CPSC should have a method of verifying that a submitter is who they say they are and not a competitor, interest group, or other person motivated to "salt" the database, and that CPSC should run system checks to see whether multiple reports are received from the same person.

Response

We agree that preventing fraudulent reports is a high priority in the development of the public database. The development team has incorporated the following to address the issue. In the new incident report form, the user must check a box that indicates they certify their incident report to be true and accurate to the best of their knowledge. This screen captures "Verification by Submitter" as one of the five types of information required by CPSIA, at a minimum, to publish incidents of harm in the public database. Once the "certify" box is checked, the "Submit" button becomes available at the bottom of the screen. The user clicks the "Submit" button to officially submit their incident report to the CPSC.

The database implementation team is working closely with the enterprise information security team to ensure the system utilizes industry best practices as well as complies with Federal and CPSC specific security requirements. We are considering implementation of CAPTCHA [1] types of challenge-response tests to ensure that the incident report form is not being generated by a computer. We will also examine technical options to detect if multiple reports are submitted from the same IP address.

8. CPSC asked whether the agency should design the online reporting form to ensure the capture of data that can be used in scientific statistical analysis and, if so, how.

Comments (Summary 8)

Two commenters agreed that the database could facilitate statistical analysis, stating that the data could be used to calculate incident rates, identify emerging hazard trends, improve CPSC's ability to identify risks and respond quickly, determine the effectiveness of safety standards and regulations, and further CPSC's IT modernization plan. One commenter responded that the database would not support the use of the data for scientific statistical analysis because of concerns regarding the validity of the data.

Response

We are designing database reporting options into the system that will enable public users to extract data sets of published incident report information. The extracted fields on these reports may be user-defined and exportable in a variety of standard file formats that will enable use with popular data analysis tools.

[1] Completely Automated Public Turing test to tell Computers and Humans Apart.

9. CPSC asked whether the report form should contain links to outside Web sites and, if so, why.

Comments (Summary 9)

CPSC received four comments in response to this question and all agreed that linking to outside Web sites could be problematic. Some commenters agreed that links could be helpful if such links were relevant to the product or complaint.

Response

We agree with these comments and conclude that the report form should not contain links to outside, non-CPSC Web sites at this time.

10. CPSC asked how the agency should design the report form so that it is clear and easy for users to complete.

Comments (Summary 10)

Many of the commenters agreed that for ease of use the report form should contain as many drop-down menus, pop-up windows, help features, reminders, and auto-fill fields as possible and/or that required fields should be marked with an asterisk. Some commenters felt that the database should distinguish (statutorily) required fields from optional fields. Some commenters felt that the database should have as few required fields as possible, but provide additional fields that can be filled in if the submitter so chooses. Some commenters suggested it could be useful to allow narrative responses when seeking a description of a product or incident. Others provided more basic suggestions for the design of the report form, such as the report form should use a large, easy-to-read font and language. In addition, one commenter suggested that CPSC should provide easy access to information about the database, including its purpose, its potential uses, and a guide on how to access information in the database and should include CPSC contact information, such as e-mail address and phone number, in plain sight for users who need assistance with the database. One commenter proposed that submitters should have the option to review and edit the submission at any point in the process of filling out the report form.

Response

We agree with these comments and are incorporating many of the recommendations in the public database. The incident report input screens being developed incorporate auto-fill functions, drop-down menus, and text fields where appropriate. For example, an auto-fill function will be provided for brand name, model name or number, manufacturer name, retailer name, and similar fields based on information we have collected in our database library, which will grow over time. Drop-down menus will be used for fields such as product category and type; injury severity, type, and location; and state and country codes. Text fields will be available for incident description and product description.

The incident report form is being designed to provide on-line help to assist submitters with locating the product identification information such as brand name, model number, manufacturer name, and manufacture date code. The staff explored the feasibility of collecting detailed product identification information from the industry but ultimately decided that given the pace of change and dynamic nature of the consumer product universe, central maintenance of such information would be infeasible. The form will also inform the user about the purpose and use of the information collected as well as how it will be protected.

11. CPSC asked how the agency could ensure the accuracy of submitted data, from a system design perspective.

Comments (Summary 11)

Two commenters suggested that a report of harm be assigned a unique identifier. One commenter suggested that a report of harm could utilize two unique identifiers, one viewable in the public database and one viewable only to submitters, manufacturers or private labelers, and the CPSC for the purposes of collecting further information regarding a report of harm. One commenter suggested that anyone submitting a report of harm should be required to provide contact information. Submitters should be asked to create a user ID and password that can be linked to each report submitted by the user.

One commenter suggested that a submitter should identify to what group they belong when filing a report of harm, for example, consumer, government agency, or health care professional. Several commenters suggested the use of drop-down menus and/or auto-fill features for as many categories of information as possible throughout the report form to assist submitters in providing complete and accurate information. For instance, one commenter suggested using hazard codes similar to those used in the NEISS database and brand names using data already in CPSC's other databases, and creating a registry for manufacturers and others to provide their contact information. One commenter suggested unlimited free text incident descriptions. One commenter also suggested including data fields on the report form for CPSC-validated data as well as manufacturer/private labeler comments.

One commenter suggested allowing submitters to amend reports of harm as well as allowing manufacturers to submit comments for publication after the report of harm has been published. This commenter also suggested maintaining an audit trail every time a report is modified. One commenter stated that claims of material inaccuracy should be focused on the submitter and identification of the consumer product, and not on the reported problem with the consumer product. This commenter suggested that reports of harm should not be blocked, removed, or otherwise flagged when a manufacturer makes a claim of material inaccuracy.

Response

We have incorporated many of these suggestions into the system design. Each report will have a unique identifier number.

The incident report input screens being developed incorporate auto-fill functions, drop-down menus, and text fields where appropriate. For example, an auto-fill function will be provided for brand name, model name or number, manufacturer name, retailer name, and similar fields based on information we have collected in our database library, which will grow over time. Drop-down menus will be used for fields such as product category and type; injury severity, type, and location; and state and country codes. Text fields will be available for incident description and product description.

The system will utilize drop-down menus where possible to ensure data quality. The system will perform quality checks including, but not limited to, e-mail address format, blank fields, invalid data format (characters in a number field), and state and zip code match.

We are developing a process to identify, confirm, and register companies that wish to use the online manufacturer portal that is being designed to facilitate communication between CPSC and manufacturers. Manufacturer registration, contact/account management, e-mail communication, and ability to flag information are all functionalities being considered for the portal. Manufacturers will be able to choose their preferred method of communication (e-mail or postal mail) with the CPSC. Manufacturers will designate a point of contact within their organization to

receive notification from the CPSC. An audit trail will be maintained for all changes made in the system.

The incident report form was designed with the minimum number of required fields, marked by an asterisk, while encouraging the user to supply additional information. For example, only after the user selects the option of posting the incident report to the public database does the system checks for the five required statutory elements of a complete incident report. The user is encouraged but not required to register with an e-mail address and password. We propose making the user's contact information optional for submitting an incident to the CPSC and a requirement for posting the incident report in the public database.

12. CPSC asked what the agency could do to ensure the ongoing and perpetual integrity of submitted data, from a system design perspective.

Comments (Summary 12)

Two commenters suggested that CPSC should use software "filters" to sort out redundancies and multiple submissions from the same source and to group multiple discrete reports for the same problem. One commenter suggested that the CPSC publish the data in PDF format or other format not capable of manipulation. One commenter stated that CPSC should ensure the database is a closed-loop that allows for feedback on, and modification of published data. Two commenters agreed that the database should allow for the ability to remove falsified or erroneous data. One commenter proposed that manufacturer/private labeler's comments be aligned with, and published simultaneously with, the report of harm.

One commenter suggested that CPSC could generate notices, and/or seek comments, in relation to events that could occur with reports of harm, such as closure, retention time, and/or archiving. Another commenter believes that information should remain in the database indefinitely. One commenter also stated that CPSC should provide notice to database users on every page, including printed copies, that the agency does not guarantee the accuracy, completeness, or adequacy of the database, and that printed pages should bear a date to reduce confusion between versions of reports. One commenter stated that CPSC should establish guidelines for agency staff or contractors who will be interacting with the database. One commenter proposed that any changes to the database should require ample public notice and accommodate new data in ways that will not alter prior data structures.

Response

The incident report input screens being developed incorporate auto-fill functions, drop-down menus, and text fields where appropriate. For example, an auto-fill function will be provided for brand name, model name or number, manufacturer name, retailer name, and similar fields based on information we have collected in our database library, which will grow over time. Drop-down menus will be used for fields such as product category and type; injury severity, type, and location; and state and country codes.

The system will feature tools for CPSC to perform redundancy and deduplication functions. Software is being designed to sort and select potential duplicates based on predefined criteria. Matches will automatically be flagged for CPSC staff review. The CPSIA conferees recognized that "multiple reports of the same incident could provide different relevant details and that information from those reports could be helpful to the public and should, therefore, remain in the database." [2] Therefore, those different, relevant details will be captured in the database. The public database will feature prominent notice that the agency does not guarantee the accuracy, completeness, or adequacy of the contents of the database.

13. CPSC asked how the agency should address incomplete reports of harm, from a system design perspective.

Comments Summary (13)

CPSC received a variety of comments in response to this question. Some commenters suggested that incomplete reports of harm (*i.e.,* those lacking the requisite minimum information) should not be included in the database and/or submitters should be cued via an auto-reminder function when required fields are incomplete. Other commenters proposed that CPSC should accept forms with incomplete information and/or seek to fill gaps through further research. Two commenters suggested that the CPSC can and should, if appropriate, act on information in these submissions.

Response

We are designing the system to prompt the submitter when the required information for inclusion in CPSC's public database has not been completed. In addition, staff recommends including language in the public database to encourage submitters to complete the minimally required information for inclusion in the public database. Although incomplete reports will not be published in the public database, we propose that incomplete reports be stored for appropriate Commission use.

14. CPSC asked whether the report form should check for inaccurate information and, if so, how.

Comments (Summary 14)

One commenter responded that the CPSC need not check for inaccurate information if it utilizes a security feature such as those that require a user to type a combination of letters and numbers appearing on screen. Another commenter suggested that in order to check for inaccurate information, e-mail addresses could be validated for proper format and against illegitimate use, database fields could be validated (*e.g.,* system check for blank fields, etc.), and by the use of drop-down menus to accurately link a manufacturer to a brand and vice versa.

Response

We agree with these recommendations. One of the security features under consideration is using CAPTCHA types of challenge-response tests to ensure that the incident report form is not being generated by a computer. The system will utilize drop-down menus where possible to ensure data quality. The system will perform quality checks including, but not limited to, e-mail address format, blank fields, invalid data format (characters in a number field), and state and zip code match.

15. CPSC asked what means the agency could employ to ensure that the correct manufacturer and/or private labeler is identified in a report of harm.

Comments (Summary 15)

One commenter suggested that the following information would aid in identifying the product and the manufacturer: brand name, product name, type of product, model number or name, serial number (if available), product description, and product age. Another commenter suggested the use of drop-down menus in order to accurately link manufacturers to products and vice versa.

One commenter suggested that CPSC should rely on the manufacturer to confirm their identity in relation to the product identified in the report of harm. This commenter also suggested that CPSC allow companies to register their contact information with CPSC in order to minimize agency resources. This commenter also proposed that retailers be treated similarly since retailers oftentimes have as much product

[2] Joint Explanatory Statement of the Committee of Conference, July 28, 2008, page 6.

information as manufacturers, if not more.

Response

The incident report input screens being developed incorporate auto-fill functions, drop-down menus, and text fields where appropriate. For example, an auto-fill function will be provided for brand name, model name or number, manufacturer name, retailer name, and similar fields based on information we have collected in our database library, which will grow over time. Drop-down menus will be used for fields such as product category and type; injury severity, type, and location; and state and country codes. Text fields will be available for incident description and product description.

The system will utilize drop-down menus where possible to ensure data quality. The system will perform quality checks including, but not limited to, e-mail address format, blank fields, invalid data format (characters in a number field), and state and zip code match.

We explored the feasibility of collecting product identification information from the industry to link manufacturers to products and ultimately propose that manufacturers maintain that information to provide better data quality and consistency. One key piece of relevant feedback received from manufacturers during the staff workshop was that manufacturers themselves often have difficulty keeping their model/product database accurate and up to date. Having CPSC maintain a copy of this information would introduce additional complexity and risk.

We agree with comments regarding company registration and are developing a process to identify, confirm, and register companies.

16. CPSC asked what, if any, instructions to users should be included on the report form.

Comments (Summary 16)

Some commenters suggested that the instructions should be simple, identify all required information, and/or state that the form cannot be processed without the required information. Some commenters suggested that the report form contain pop-up boxes or links providing more detailed explanations of the types of information sought. Other commenters suggested that the report form should notify submitters when required fields are left blank. Three commenters proposed that the report form should instruct the submitter to answer questions as thoroughly and completely as possible, as well as of the importance of providing full and complete information, and instruct submitters to reference any documents associated with the purchase and use of the product while filling out the form.

One commenter proposed that the report form should indicate what information is required to make a report of harm eligible for inclusion in the database. One commenter suggested that the report form should include a clear explanation of the privacy protections of the submitted information and the importance of these reports to the CPSC. This commenter suggested that the report form should make clear to consumers that they have the right to decline consent to sharing their contact information with the manufacturer and that doing so does not affect the ability of a report to be published.

Several commenters proposed that the instructions on the report form should inform the submitter of the benefits of allowing the manufacturer to contact them to verify the report and also encourage submitters to do so. One commenter proposed the following script be included on the report form:

> Manufacturers sometimes find it helpful to speak directly with consumers to investigate safety issues and obtain information regarding reported incidents with their products. May we disclose your name and contact information to the manufacturer or private labeler?

Another commenter suggested that if a submitter declines to share contact information with a manufacturer, there should be a field indicating as much on the report form. Other commenters felt that the submitters should be provided with this option but without bias, allowing consumers to make their own choice.

Response

We agree with the comments regarding making the form simple and easy to use. The incident report form will provide online help to assist submitters with locating the product identification information such as brand name, model number, and manufacturer name and date code. We explored the feasibility of collecting product identification information from the industry and propose that having manufacturers maintain that information will provide better data quality and consistency.

The form was designed with the minimum number of required fields, marked by an asterisk, while encouraging users to supply additional information. For example, only after the user selects the option of posting the incident report to the public database does the system check for the five required statutory elements of a complete incident report. The form will also inform the user about the purpose, use, and protection of information being collected by the CPSC and how the manufacturer might use the information provided he or she should choose to release it to the manufacturer.

Section 1102.10: Reports of Harm (Additional Comments)

17. CPSC received a number of additional comments not in response to any particular question but related to the overall issue of Section 1102.10 "Reports of Harm."

Comments (Summary 17)

Several commenters stated that the scope of the database is limited to reports of harm and not to reports relating to general product quality, service issues, or other types of quality complaints, that the harm must relate to the use of the consumer product, and/or that the database is limited to the information the Commission determines is reasonably related to the safety of consumer products as indicated by specific reports of harm caused by those products and that the CPSC should establish guidelines to this end. Along these lines, one commenter suggested that the software utilized in the database could be structured to guide or prompt submitters to supply the information necessary to constitute a report of harm. One commenter suggested that consideration should be given to limiting the reporting of "old" or "stale" data not contemporaneously related to the occurrence of the alleged incident. Three commenters suggested a one-year statute of limitations to file a report of harm. Another commenter proposed that the database should not contain a statute of limitations at all. One commenter also suggested that the database should be engineered to automatically publish reports within the required ten business days of receipt.

Response

We recognize that the scope of the database is limited to reports of harm. Instructions and guidance throughout will prompt the submitter to adhere to this scope. CPSC will review all reports of harm regardless of the date of the incident described by the submitter.

We considered options for automatic publishing of reports of harm. However, considerations around publishing personally identifiable information in free form text boxes limited staff's design options in this regard.

Section 1102.12: Manufacturer Comments

18. CPSC asked what means the agency should employ to allow manufacturers and private labelers to submit comments regarding a report of harm or to designate confidential information, and what issues should the agency consider when developing such a process.

Comments (Summary 18)

In response to this question, CPSC received one comment stating that CPSC should allow electronic submissions accommodating text, photos, and other documents as attachments. One commenter suggested that CPSC should ensure that only the applicable manufacturer or private labeler should be able to submit comments regarding a report. This commenter suggested that electronic means would be expected to facilitate making comments. This commenter also suggested that unique identifying information associated with a report should be available only to submitters, manufacturers or private labelers, and CPSC, and it should be a requirement for offering comments and, also, that different types of users could have different "views" of the data. Finally, this commenter suggested that the database should provide a mechanism for designating confidential information, redacting, and exchanging redacted versions of reports. Two commenters requested a clearly identified process with criteria to determine whether certain content is confidential business information. This commenter also suggested that CPSC should consider allowing manufacturers to "flag" reports that are believed to contain confidential business information.

Similarly, one commenter stated that the CPSC should establish a means for submitting comments and designating confidential information. The report of harm and a manufacturer's comments should be aligned so that the manufacturer's comments appear in same field as (alongside) the submitter's. This commenter also suggested that a manufacturer should be able to designate the information it believes is materially inaccurate or confidential via a clear method (*e.g.,* flag system) and, if the Commission reviews a manufacturer's confidentiality request and determines the report contains confidential information, it must redact that information from the report of harm, and must not publish the report to the database until it makes a determination as to confidentiality; if the CPSC determines it is not confidential, it must notify the manufacturer. This commenter also suggested that CPSC should establish a means for manufacturers to submit proposed redactions of confidential information and, if it is determined that it is indeed confidential, the agency should have a method for ensuring information remains confidential (*e.g.,* not disclosed under the FOIA). One commenter stated that if confidential business information does happen to be submitted for posting, manufacturers and private labelers must demonstrate confidentiality and submit supporting information to show that the requested material is entitled to confidential treatment. This commenter also stated that a manufacturer's comments to a report of harm should also contain a verification of truth and accuracy by the manufacturer.

One commenter stated that accuracy should start and end with the submitter and the product identification, and that the CPSC should not verify the accuracy of, and should not allow manufacturers to comment on, the report of harm.

Response

We agree with many of the comments and have taken the suggestions into consideration in the following ways:

- The system will allow users to submit text, photo, and other approved types of documents as attachments.
- Only the registered contact from a manufacturer or private labeler can submit comments regarding a report.
- Each report will have a unique identifier.
- There will be role-based access and views into the data.
- Manufacturers will have the ability to flag for CPSC review those reports they believe contain confidential information.

Section 1102.16: Additional Information

19. CPSC asked what additional categories of information should be included in the public database and why.

Comments (Summary 19)

Two commenters proposed that information regarding the product, such as manufacturer, the type of product, the product brand, model number or name, serial number, UPC code, date of purchase, product code date or equivalent designation on the product, and place of purchase; date of incident; location of incident; whether manufacturer or private labeler was contacted prior to submission of the report; verification that the label instructions were followed when using the product; and a brief description of the circumstances of the incident (including how the product was being used at the time of the reported incident, a description of what happened, whether the submitter used any other products or devices along with the product involved in the incident), how much the product was used over what period of time (if applicable), description of harm incurred during the incident, the types of symptoms or injuries sustained, and the type of medical care sought, if applicable. Two commenters proposed that recalls be included in the database, while another commenter proposed that the database include information derived by the Commission from CPSA Section 15 reports.

Two commenters were in favor of including CPSC technical research, reports on emerging hazards, and other staff-generated research that will improve the public's understanding of consumer product safety. One commenter stated that the Commission should make all staff research completed within the past five years publicly accessible within 30 days of completion and, if not in the database itself, linked in the database.

One commenter suggested that CPSC should address how it will integrate pre-database incident data into the new system. Along these lines, one commenter suggested that NEISS data should be included in the database, while another commenter responded that CPSC should not add categories of information beyond that required by the CPSIA but, rather, should focus its efforts on ensuring the quality of, and timely reporting of, required information. Finally, one commenter felt that the CPSC should accept information submitted anonymously by whistleblowers and, if the information was determined to be valid, the information should be part of the public database.

Response

The incident report form will be designed to collect the following information regarding the report of harm, including: Name of manufacturer or private labeler; type of product; product brand; model number; serial number; date of purchase; manufacturer code date; place of purchase; date of incident; location of incident; whether the manufacturer or private labeler was contacted prior to submission of the report of harm and, if not, whether there is a plan to contact them; a brief description of the circumstances of the incident; a description of harm incurred during the incident; the types of symptoms or injuries sustained; and the

type of medical care sought, if applicable.

After the user successfully submits the report of harm, the system will alert the user of any recalls that are related to the incident reported and provide options for the user to subscribe to the recalls.gov subscription list and possibly other lists, web services, or agency publications.

The incorporation of CPSC technical research, reports on emerging hazards, and other staff-generated research into the public database is being studied for future releases of the system.

The database will accept information submitted anonymously but we propose that anonymous reports not be published.

20. CPSC asked what, if any, information could not be included in the public database pursuant to the statute and why.

Comments (Summary 20)

Several commenters stated that the database should exclude reports filed under section 15(b) of the CPSA. One commenter also stated that information received under any other mandatory or voluntary reporting program established between retailer, manufacturer, or private labeler and the CPSC could not be included in the database, as well as information exempt from disclosure under FOIA, trade secrets, and other confidential information.

Two commenters stated that reports of harm and/or comments involving products that fall outside the scope of CPSC regulatory authority should not be included in the database. One commenter was concerned that the status of CPSC investigations, including the existence of the investigation, should not be included in the database. This commenter also felt that the database should not contain the resolution and/or remedy provided to individual submitters and that status updates should be allowed only by manufacturers providing comments. Finally, this commenter stated that third-party comments would not be appropriate for the database.

Response

We propose that all reports of harm meeting the minimum statutory requirements be included in the public database. All other reports of harm should be collected for appropriate Commission use. Reports of harm that fall outside the scope of CPSC regulatory authority will be referred to the appropriate agency or entity with notification of such action to the submitter.

21. CPSC asked what, if any, disclaimers or qualifications should appear on the report form.

Comments (Summary 21)

Comments in response to this question fell into two categories. The first category of comments concerned the need for a disclaimer either on all screen views during the process of submitting a report form or at least at the end on the completed report form. Commenters felt that that the disclaimer should inform users of the database that CPSC has not verified the truth or accuracy of reports in the database. One commenter felt that there should be an acknowledgment check box for the submitter to select upon completion of a report to certify the truth and accuracy of the report prior to submission.

The second category of comments concerned the need to inform users how reports of harm, and specifically any personal information contained therein, would be used by CPSC. One commenter suggested that users should be informed that the report of harm itself would be contained in a publicly viewable database. Other commenters were concerned that users should be informed that their contact information would never be publicly available and would only be shared with manufacturers if submitters gave express consent.

Response

We propose that notice, consistent with statutory requirements, should be provided to users of the public database that the Commission does not guarantee the accuracy, completeness, or adequacy of the contents of the database and that the submitters of a report of harm verify that the information they have provided is accurate to the best of their knowledge.

We also propose that the public database include detailed information for submitters regarding how their contact information will be used.

22. CPSC also asked what specific disclaimers the agency should make with regard to the accuracy of the information contained in the public database and why, and where should such disclaimers appear and why.

Comments (Summary 22)

CPSC received a variety of comments in response to this question. Several commenters felt that all publicly viewable pages in the database should contain a disclaimer that CPSC has not verified the truth or accuracy of the reports in the database.

One commenter recommended that that Commission use the statutorily required disclaimer consistently on each report on the database.

One commenter was concerned about a disclaimer for materially inaccurate information. This commenter suggested that when a report is claimed to contain materially inaccurate information, the report should be marked on every page to indicate it as such. When an existing report is removed or corrected because of a claim of materially inaccurate information, public notice should be made to those who already viewed the report. Finally, one commenter suggested that printed reports of harm from the database should contain a print date in order to reduce confusion between versions of reports of harm or manufacturer comments.

Response

The Commission does not guarantee the accuracy, completeness or adequacy of the contents of the public database. The public database will contain a notice to this effect. Additionally, we propose that such notice be placed in the following locations, at minimum:

- On the entrance screen for public users
- On all search result displays
- On all reports printed from the public database

Printed reports of harm will contain a print date.

Subpart C—Procedural Requirements

Section 1102.20: Transmission of Reports of Harm to the Identified Manufacturer or Private Labeler

23. CPSC asked whether, given the statutory timeframe for notification, manufacturers and private labelers should be able to "register" contact information with the Commission for the purpose of notification of a report of harm and, if so, what form of contact information should be acceptable, *i.e.,* electronic mail only. CPSC also wanted to know what other issues along these lines should be considered.

Comments (Summary 23)

The majority of the commenters who responded to this question agreed that registration would help facilitate manufacturer notification. One commenter responded that electronic mail only would be acceptable.

Response

We propose that the Commission provide a mechanism for manufacturers and private labelers to register their contact information and their preferred method of contact by the Commission.

24. CPSC asked how the agency could ensure that manufacturers and/or

private labelers do not use a submitter's contact information for purposes other than verification of a report of harm, and by what means could CPSC enforce such a provision.

Comments (Summary 24)

Two commenters suggested that CPSC could emphasize that misuse of contact information would not be tolerated and that CPSC would take any necessary action to prosecute violators. One commenter proposed that CPSC reiterate the restrictions and appropriate uses for consumer contact information in all forms sent to manufacturers, while another commenter proposed that CPSC publish a list of uses of contact information that would be deemed abuses of that information. This commenter also suggested that CPSC could create a webpage for submitters to report abuse.

Response

We conclude that the intent of the statute to provide contact information for the submitter to the manufacturer is for the sole purpose of verifying the report of harm. The Commission may, at its discretion, determine means by which it will enforce this provision.

Subpart B—Content Requirements

Section 1102.22: Opportunity for Manufacturer Comment

25. CPSC asked what means the agency should employ to notify manufacturers and private labelers regarding a report of harm within the five day statutory time frame.

Comments (Summary 25)

The majority of commenters agreed that electronic mail notification would be the most effective means of notification. Although others felt that it should be according to the preference (electronic mail, telephone, fax) of the manufacturer or private labeler. Two commenters were concerned that notification should reach the intended recipient and suggested that CPSC develop procedures for when electronic mail is undeliverable and/or to confirm that individuals receiving notification are authorized contacts for the manufacturers and private labelers.

Response

As part of the public outreach effort, we are developing a process to identify, confirm, and register companies. A manufacturer portal is being designed to facilitate communication between CPSC and manufacturers. Manufacturer registration, contact/account management, e-mail communication, and the ability to flag information that may be confidential or materially inaccurate are all functionalities being considered for the portal. Manufacturers will be able to choose their preferred method of communication (e-mail or postal mail) with the CPSC. Manufacturers will designate a point of contact within their organization to receive notification from the CPSC. We are working closely with enterprise information security experts to secure electronic communication.

26. CPSC asked what, if any, circumstances could arise which could restart any of the timeframes contemplated in the statute with regard to manufacturer notification and responses.

Comments (Summary 26)

One commenter suggested that if a submitter provides new or supplemental information to CPSC before the initial report is published, this would delay publication of the report of harm in the database. Another commenter suggested that if there is a valid claim by the manufacturer that a report of harm is invalid, incomplete, or inaccurate, the CPSC should take steps to suspend any statutory time limits until the claim could be adjudicated by the Commission. One commenter proposed that the Commission "restart" the statutory timeframes if notification goes to the wrong manufacturer or private labeler, if incomplete information is provided in the report form, or if the submitter corrects the original report form, especially where information in a required field has been changed.

Response

We propose that in cases where a claim of materially inaccurate or confidential information is under review, the Commission, in its discretion, may withhold a report of harm in part or in full until such a determination is made. Absent such a determination, the Commission will generally publish reports of harm on the tenth business day after transmitting a report of harm.

Section 1102.26: Designation of Materially Inaccurate Information

27. CPSC asked, given the statutory timeframe, how the agency should review claims of materially inaccurate information.

Comments (Summary 27)

Two commenters felt that there should be a process for reviewing, modifying, or removing materially inaccurate information. One commenter felt that a claim of materially inaccurate information contained in a report of harm should not restart the ten-day statutory time period for posting of other information in the report form. One commenter felt that once the CPSC has received a claim of materially inaccurate information contained in a report of harm, it should have a limited time to issue a decision or, in the alternative, it should remove the report of harm until it does. Finally, one commenter felt that the CPSC could use its discretion to permit an extension of the ten-day period for publication in the database in circumstances where there is a challenge to the accuracy of the report.

Response

We propose that if a claim of materially inaccurate information is timely submitted, the Commission may withhold the report of harm from publication in the public database until a determination is made regarding such claim. Absent such a determination, the Commission will generally publish reports of harm on the tenth business day after transmitting a report of harm. We also propose that if the Commission determines that the designated information in a report of harm or manufacturer comment contains materially inaccurate information before it is published, the Commission should in its discretion do the following: Decline to add the materially inaccurate report of harm or manufacturer comment to the public database; redact the information, and if the minimum requirements for publication are met, publish the report of harm or manufacturer comment in the database; correct the materially inaccurate information, and if the minimum requirements for publication are met, publish the report of harm or manufacturer comment in the database; or, add the information to the report of harm or the manufacturer comment to correct the materially inaccurate information, and, if the minimum requirements for publication are met, publish the report of harm or manufacturer comment in the public database.

Should the Commission make a determination of material inaccuracy after publication, we propose the following: Removal of the entire materially inaccurate report of harm or manufacturer comment from the public database, including all associated documents, photographs, or comments; redaction of the materially inaccurate information and if the minimum requirements for publication are met, maintain the report of harm or manufacturer comment in the public database; correction of the materially

inaccurate information and, if the minimum requirements are met, maintain the report of harm or manufacturer comment in the public database; or, add the information to the report of harm or the manufacturer comment to correct the materially inaccurate information and, if the minimum requirements for publication are met, maintain the report of harm or manufacturer comment in the public database.

28. CPSC asked whether the agency's responsibility with regard to materially inaccurate information is limited to reports of harm and manufacturer comments and why or why not.

Comments (Summary 28)

CPSC received one comment in response to this question which stated that CPSC should exclude materially inaccurate information regardless of the source.

Response

Only one commenter opined that the agency has a responsibility for materially inaccurate information regardless of the source. We believe that new section 6A of the CPSA sets forth requirements for the Commission to review such information in reports of harm and manufacturer comments in the context of the database. We recommend that our responsibility be for those two identified instances. For other information not in the database, CPSC follows other requirements under section 6 of the CPSA for ensuring that information it discloses is accurate and not misleading and that the Commission has taken reasonable steps with respect to the accuracy of information.

29. CPSC asked what types of information would constitute materially inaccurate information.

Comments (Summary 29)

CPSC received numerous, specific examples of what could constitute materially inaccurate information contained in a report of harm, including: Misidentification of the manufacturer or private labeler, misidentification of persons involved, or misidentification of the consumer product itself (including misidentification of brand name or model number or misuse/modification of the product); and inaccuracy in the description of the incident.

Some commenters were also concerned that materially inaccurate information could comprise opinion statements about a consumer product's design or general safety, information not directly related to the incident such as conclusory or unsupported statements about product design, information in contradiction with generally accepted scientific principles, legal opinions, and reports of an injury or hazard caused by something other than the product identified in the report of harm. One commenter felt that any information that the staff determines to be falsified as well as any information that is inflammatory or invective could also constitute materially inaccurate information.

Several commenters also felt that the database should be a repository for fact-based information only. Similarly, one commenter felt that information that could not be substantiated, such as documentation or information supporting a report of harm, would constitute materially inaccurate information. Others provided more general comments stating that materially inaccurate information would be inaccurate information that is substantial and important. Along these lines, some commenters suggested that CPSC provide a definition for "materially inaccurate information."

Response

We agreed on the following definition of materially inaccurate information in a report of harm: information that is false or misleading in a significant and relevant way that creates or has the potential to create a substantially erroneous or substantially mistaken belief in a database user about information in a report of harm relating to: (1) The identification of a consumer product; (2) the identification of a manufacturer or private labeler; or (3) the harm or risk of harm related to the use of the consumer product.

We agreed on the following definition of materially inaccurate information in a manufacturer comment: Information that is false or misleading in a significant and relevant way that creates or has the potential to create a substantially erroneous or substantially mistaken belief in a database user relating to: (1) The nature, scope, liability, or cause of a harm or risk of harm related to the use of a consumer product; (2) the status of a Commission, manufacturer, or private labeler investigation; (3) the identity of the firm or firms responsible for the importation, manufacture, distribution, sale, or holding for sale a consumer product; (4) whether the manufacturer or private labeler is engaging in a corrective action (when such action has not been approved by the Commission); or (5) whether the manufacturer has taken, or promised to take, any other action with regard to the product.

30. CPSC asked how the agency should process a claim that a report of harm or a manufacturer comment contains materially inaccurate information, both before and after such information has been made available in the public database.

Comments (Summary 30)

The majority of commenters agreed that CPSC should develop a transparent and efficient process for handling a claim of materially inaccurate information in a report of harm, including how redactions, corrections and/or removal of a report of harm will be addressed. Correspondingly, many commenters also felt that CPSC should develop a parallel procedure for the inclusion of reports of harm in the database wherein CPSC staff would make affirmative verification that the report of harm was true and accurate. Several commenters felt that a report of harm could not be published in the database until the CPSC had verified that it was true and accurate.

Two commenters felt that CPSC should follow the procedures specified in the statute wherein upon a claim that a report of harm or a comment contains materially inaccurate information, the CPSC must make a determination as to the accuracy of that report or comment and that the report or comment should not be published until such determination is made. Similarly, three commenters suggested that the CPSC should decline to post a report of harm involving a claim of material inaccuracy until an appropriate investigation of the claim had been made.

Another commenter proposed that the CPSC adopt a trial procedure during which it would permit extensions to the ten-day period for publication of reports of harm to the database where there has been a claim of material inaccuracy. This commenter suggested that the CPSC provide a means for manufacturers and private labelers to flag information in a report as being materially inaccurate and also provide a means to flag materially inaccurate information after it has been published to the database. This commenter recommended that the CPSC establish timeframes during which claims of material inaccuracy will be resolved.

On the other hand, two commenters felt that publication of a report of harm should take priority over verifying claims of materially inaccurate information. Additionally, one commenter suggested that the party contending the material inaccuracy bears the burden of demonstrating the material inaccuracy and that CPSC should reject efforts to delay or deny

posting of information based upon unsubstantiated claims of materially inaccuracy. One commenter felt that if the CPSC publishes a report of harm over the manufacturer or private labeler's objections, the CPSC should provide the reasons for doing so. One commenter wanted an opportunity to examine the consumer product in question during the pendency of an investigation into materially inaccurate information in a report of harm.

One commenter felt that if an inaccurate report was inadvertently published, it should be removed as soon as possible and that a simple retraction would not suffice, while another commenter felt that the CPSC could internally investigate it and post a clarification/disclaimer or delete the materially inaccurate information from the report of harm.

One commenter suggested that when a report of harm has been determined to contain materially inaccurate information, it should be marked on every page to indicate it was removed or corrected. When existing reports are removed or corrected because they contain materially inaccurate information, public notice should be made to those who already viewed the report of harm. This commenter also suggested that if the CPSC receives a subpoena or FOIA request regarding a report of harm that has been corrected or removed, the CPSC should provide notice in accordance with Section 6(b) to the manufacturer or private labeler.

Response

We propose that if the Commission makes a determination of materially inaccurate information prior to publication of a report of harm, it shall either decline to add the report of harm or manufacturer comment to the public database or, redact or correct the materially inaccurate information and if the minimum requirements for publication are met, publish the report of harm or manufacturer comment in the public database. We propose the Commission favor correction over exclusion.

If the Commission makes a determination of material inaccuracy after publication of a report of harm or manufacturer comment, the Commission shall, no later than seven business days after making such determination, remove the report of harm or manufacturer comment from the public database or, redact or correct the report of harm or manufacturer comment and if the minimum requirements for publication are met, publish the report of harm or manufacturer comment. We propose the Commission favor correction over exclusion.

31. CPSC asked how the agency should allow a submitter or others to claim that a manufacturer has submitted materially false information.

Comments (Summary 31)

Two commenters recommended that CPSC assign a unique identifier to each report of harm to assist in making a claim of material inaccuracy, while another commenter suggested there is no need to highlight reports of harm whose accuracy is doubted since CPSIA contains reasonable protections to safeguard against inaccurate information.

Response

We propose incorporating the suggestion of a unique identifier into the design of the public database.

Section 1102.28: Publication of Reports of Harm

32. CPSC asked if a manufacturer or private labeler requested that a comment associated with the report of harm be made available in the public database, what, if any, circumstances would prevent such comment from inclusion in the public database.

Comments (Summary 32)

One commenter replied that CPSC should not publish any comments that are found to be falsified, inflammatory, invective, or legal opinions or comprise information patently violating generally accepted scientific principles. Another commenter replied that all comments should be included in the database as long as they do not contain trade secret or confidential information.

Response

We agree that all comments that are requested for publication be included in the public database unless the Commission determines publication of the comment is not in the public interest.

33. CPSC asked what, if any, authority does the agency have to withhold a report of harm from the public database if a manufacturer or private labeler claims the report contains materially inaccurate or confidential information.

Comments (Summary 33)

One commenter responded that CPSC is permitted to withhold a report of harm from the database if it agrees with the manufacturer or private labeler's claim.

Response

We propose that should the Commission make a determination of materially inaccurate information or confidential information, the Commission shall, in its discretion, decline to add the report of harm to the database, correct the materially inaccurate information in the report or add information to the report to correct it. We propose to favor correction/addition over exclusion.

34. CPSC asked what data sets, including information from reports of harm and mandatory and voluntary recall notices, should be made available for public search and reporting and why.

Comments (Summary 34)

Some commenters agreed that all of the information submitted to the database except for personal and/or contact information contained in reports of harm should be made available for public search and reporting. One commenter wanted to make it clear that personal and/or contact information should never be disclosed to the public and only to a manufacturer or private labeler where there has been consent. Several commenters agreed that voluntary and mandatory recall notices, and/or information derived as a result of such recall notices, should be searchable as well. One commenter would like to be able to search the CPSC's NEISS data.

Two commenters wanted to be able to search for manufacturer and private labeler comments provided in response to a report of harm. One commenter also suggested being able to search CPSC's "closed investigations" which the staff is interpreting as pertaining to investigations conducted by the Office of Compliance and Field Operations staff. One commenter would like to be able to search staff research. One commenter noted that recall information should be provided separate from reports of harm, stating that recalls are often limited in scope and there is a risk that reports of harm could be inappropriately or inaccurately linked to recall information, while another commenter wanted searching to be limited to what the statute requires in as simple and accurate a format as possible.

Response

We propose that all information and data sets that will be made available in the public database should be made searchable and sortable. The incorporation of additional categories of information into the public database is being studied for future releases of the system software.

35. CPSC asked in what formats the agency should make data available to the public and why.

Comments (Summary 35)

Several commenters agreed that the data should be downloadable and/or searchable in common, readily-available formats that do not require the purchase of specific, proprietary software. One commenter suggested providing the data in downloadable formats that would facilitate use by manufacturers in their own tracking systems.

Commenters would like to be able to search by general word entry, including advanced searches for data using search terms connected by both the words "AND" and "OR," and/or also by type/category of product, brand name, model name, model number, type of injury and other harm, approximate date of purchase, and product manufacturer information.

Two commenters recommended making raw data available.

Response

We agree with a number of the comments and the system will provide search capabilities that include those suggested by the comments such as "fuzzy matching", search/sort by product category, manufacturer/private labeler/retailer (including common misspellings), model, date/type/location/severity of the product and hazard. The system will also provide downloadable access the data in multiple common formats.

36. CPSC asked what types of data analysis and reporting tools are being used by third party analysts in the public and industry, and what are those tools' relative merits and drawbacks.

Comments (Summary 36)

One commenter stated that it uses COGNOS Powerplay to analyze its data because it allows both Web- and desktop-based access to data in its proprietary databases from an easy-to-use front-end. Also, data accessed via COGNOS Powerplay can be exported to Excel or other programs. This commenter indicated that the drawbacks include limited graphing capabilities and the need for a programmer to build COGNOS cubes that allow access to data.

One commenter responded that commercial software programs developed by Intertek and Safety Research and Strategies facilitate large database searches and result analysis. This commenter stated that Intertek's software is a Web-based software package that enables users to easily analyze product injury data and is currently part of NEISS. This commenter recommended that CPSC utilize a software program that allows keyword searching, year-to-year comparisons, and trend analysis across all variables that NEISS tracks (injury type, body part, environment, age, outcome). One commenter responded that the CPSC need not, and should not, facilitate third-party organizations in analyzing preliminary data.

Response

We recognize the power of "crowd sourcing." The system will make the data available in multiple common formats for download so researchers and partner organizations can work with us to identify hazards and analyze trends. We are also planning to partner with research institutions to develop advanced algorithms for early warning and pattern recognition so smarter decisions can be made to better protect consumers.

Subpart D—Notice and Disclosure Requirements

Section 1102.44: Applicability of Section 6(a) and (b) of the CPSA

37. CPSC asked under what circumstances the provisions of section 6(a) and (b) of the CPSA would be relevant to the provisions of section 6A of the CPSA, especially with regard to additional categories of information that may be included in the public database.

Comments (Summary 37)

Two commenters responded that the provisions of section 6(b) were not relevant/applicable to the database. Two commenters responded that only reports of harm are exempt from sections 6(a) and (b) and any additional information included in the public database would have to comply with those sections.

Response

The Commission has to follow the provisions of section 6(a) and (b) of the CPSA when determining what additional information is in the public interest to include in the database.

V. Request for Comments

The CPSC has already invited comments on the publicly available database through a public hearing held on November 10, 2009 and through a series of public workshops held on January 11 and 12, 2010, and we considered the comments in developing this proposed rule. This proposed rule would establish content and procedural requirements for the inclusion of information in the publicly available database. All interested persons are invited to submit comments on any aspect of the proposed rule. Comments should be submitted in accordance with the instructions in the **ADDRESSES** section at the beginning of this notice.

VI. Environmental Impact

The Commission's regulations at 16 CFR 1021.5(a) are considered to "have little or no potential for affecting the human environment," and environmental assessments and impact statements are not usually prepared. *See* 16 CFR 1021.5(c). The proposed rule contains the Commission's interpretation of the statutory requirements set forth in section 6A of the CPSA, as added by section 212 of the CPSIA, for the inclusion of information related to reports of harm involving the use of consumer products or other products or substances regulated by the Commission in a publicly available and searchable database. As such, the proposed rule is not expected to have an adverse impact on the environment. The Commission concludes that no environmental assessment or environmental impact statement is required.

VII. Paperwork Reduction Act

This proposed rule contains information collection requirements that are subject to public comment and review by the Office of Management and Budget (OMB) under the Paperwork Reduction Act of 1995 (44 U.S.C. 3501–3520). We describe the provisions in this section of the document with an estimate of the annual reporting burden. Our estimate includes the time for reviewing instructions, searching existing data sources, gathering and maintaining the data needed, and completing and reviewing each collection of information.

We particularly invite comments on: (1) Whether the collection of information is necessary for the proper performance of the CPSC's functions, including whether the information will have practical utility; (2) the accuracy of the CPSC's estimate of the burden of the proposed collection of information, including the validity of the methodology and assumptions used; (3) ways to enhance the quality, utility, and clarity of the information to be collected; and (4) ways to minimize the burden of the collection of information on respondents, including through the use of automated collection techniques, when appropriate, and other forms of information technology.

Title: Publicly Available Consumer Product Safety Information Database.

Description: The proposed rule would allow consumers to submit reports of harm involving the use of consumer

products or other products or substances regulated by the CPSC and also allow manufacturers of such products or substances to comment on the reports of harm. The reports and comments would be part of a public database operated and maintained by the CPSC. A manufacturer identified in a report of harm and who receives a report of harm from CPSC may request that portions of the report be designated as confidential information. Any person or entity reviewing a report of harm or manufacturer comment may request that the report or comment, or portions thereof, be excluded from the database or corrected by the CPSC because it contains materially inaccurate information.

Description of Respondents: Persons who wish to submit reports of harm involving the use of consumer products or other products or substances regulated by the CPSC and manufacturers of such products or substances who wish to comment on those reports of harm, pursuant to section 6A of the Consumer Product Safety Act (CPSA) (15 U.S.C. 2055a). In addition, any person or entity reviewing a report of harm or manufacturer comment, either before or after publication in the database, may request that the report of harm or manufacturer comment, or portions thereof, be excluded from the database or corrected by the CPSC because it contains materially inaccurate information.

We estimate the burden of this collection of information as follows:

TABLE 1—ESTIMATED ANNUAL REPORTING BURDEN

16 CFR section	Number of respondents	Frequency of responses	Total annual responses	Minutes per response	Total burden, in hours
16 CFR 1102.10(b)(1), (3) Reports of harm—electronic	11,534	1	11,534	12	2,307
16 CFR 1102.10(b)(2) Reports of harm—telephone	3,329	1	3,329	10	555
16 CFR 1102.10(b)(4) Reports of harm—paper	277	1	277	20	92
16 CFR 1102.12(b)(1), (2) Manufacturer comments—electronic	5,753	1	5,753	255	24,450
16 CFR 1102.12(b)(3) Manufacturer comments—paper	1,817	1	1,817	270	8,177
16 CFR 1102.24 Requests to treat information as confidential—electronic	345	1	345	15	86
16 CFR 1102.24 Requests to treat information as confidential—paper	109	1	109	30	54
16 CFR 1102.26 Requests to treat information as materially inaccurate—electronic	1,726	1	1,726	30	863
16 CFR 1102.26 Requests to treat information as materially inaccurate—paper	545	1	545	60	545
Total					37,129

There are no capital costs or operating and maintenance costs associated with this collection of information.

Our estimates are based on the following:

The CPSC is in the process of developing the forms that will be used by consumers and manufacturers to submit reports and comments for inclusion in the database. Because those forms are still under development, for present purposes we based our burden estimates on our experience with similar forms and processes, and on information gleaned from manufacturers. Specifically, the CPSC currently has an incident report form that consumers and others use to report consumer safety incidents to the agency. The CPSC provides most of those consumer complaints to the manufacturer, and the manufacturer may provide comments to the agency.

For present purposes, we assume that the public database will receive the same number of reports of harm as the CPSC received of incident reports in fiscal year 2009 and that the numbers by manner of submission to the CPSC (*i.e.,* electronic, telephone, paper) will be the same. Thus, using the data from fiscal year 2009, we estimate that we will receive a total of 15,140 reports of harm (11,534 by electronic means, 3,329 by telephone, and 277 by paper submissions). We had already estimated the time associated with the electronic and telephone submission of incident reports at 12 and 10 minutes respectively and so used those figures for present purposes as well. We estimate that the time associated with a paper form would be 20 minutes on average. Thus, we estimate the total burden hours associated with the submission of reports of harm to be 2,954 hours ((11,534 electronic report × 12 minutes per report) + (3,329 telephone reports × 10 minutes per report) + (277 paper reports × 20 minutes per report) = 177,238 minutes or approximately 2,954 hours)).

In 2008, manufacturers submitted comments to the CPSC in response to a consumer complaint forwarded to the manufacturer about 40 percent of the time. We estimate that the response rate will increase in the case of the public database; currently, neither the incident reports nor manufacturer comments are routinely public. We estimate that the manufacturer response rate will increase 25 percent, up to a 50 percent response rate. Therefore we expect to receive half as many total manufacturer comments as reports of harm (15,140 reports of harm × 0.5 manufacturer comments per report of harm = 7,570 manufacturer comments). In terms of the manner of commenting, we do not currently keep track of how many manufacturer comments are submitted electronically versus in paper form. Because the public database will be online, we will assume that most manufacturers will utilize electronic options for participating in the database, especially when the public database (unlike the current incident reporting system) will not give manufacturers the option of submitting their comments by phone. However, to ensure that we avoid inadvertently underestimating the burden, we will assume that manufacturers would submit electronically at the same rate. That equates to an estimate of 5,753 manufacturer comments submitted electronically and 1,817 submitted on paper.

We also will assume that that there are two actions involved in a manufacturer comment: First, the research and preparation necessary to comment, and second, the act of providing the comment. To estimate

how much time manufacturers will spend researching and preparing to comment, we contacted three manufacturers that have experience submitting comments in response to incident reports. The manufacturers each reported a range of time, because time required in preparing a comment can vary greatly. The three ranges were 15 minutes to 4 hours, 10 minutes to 5 hours, and 10 minutes to 3 hours. For purposes of estimating the burden, we used the average high end of these ranges, 4 hours, for that portion of the burden estimate. Based on our experience with the current manufacturing comment process, we estimate that manufacturers will spend between 5 and 30 minutes actually providing the comment, depending on the length and complexity of their comment. For the purposes of this estimate, we use the high end of that range for paper submissions (30 minutes) and the midpoint for electronic (15). Thus, the estimated burden associated with manufacturer comments is approximately 32,607 hours (((5,753 electronic comments × 255 minutes per comment) + (1,817 paper comments × 270 minutes per comment) = 1,957,605 minutes or approximately 32,627 hours).

Regarding requests to designate information confidential, we anticipate that there are very limited circumstances under which confidential information will be included in a report of harm; by its very nature, such information is not available to the public. Accordingly we assigned a value of 3 percent to our estimation of the rarity with which we expect to receive such requests. Three percent of the total number of reports of harm estimated (15,140) results in an estimate of 454 requests to designate information as confidential. The proposed rule would specify what must be included in such a request (§ 1102.24(b)); it is concrete information that we expect will be known or readily attainable by the entity filing the request. We estimate that it will take 15 minutes to submit such a request electronically. Because it would take longer to convey the necessary information on paper, and to avoid inadvertently underestimating the burden, we estimate that it will take twice as much time, or 30 minutes, to submit the request on paper. We employed the same assumptions as used above to predict how many requests will be submitted electronically (454 requests × 76 percent electronic submission) to arrive at an estimate of 345 electronic requests and 109 paper requests. We multiplied 345 electronic requests by 15 minutes, resulting in 5,175 minutes, or about 86 burden hours for the electronic requests. Similarly, we multiplied 109 paper requests by 30 minutes, resulting in 3,270 minutes, or about 54 burden hours for the paper requests.

Regarding requests to designate information materially inaccurate, roughly 10 percent of the manufacturer comments that we currently receive contain a claim that the incident report contained inaccurate information. We used that figure to estimate that the number of requests to treat information as materially inaccurate will be 10 percent of the total number of reports of harm and manufacturer comments that we expect, or 2,271 ([15,140 reports + 7,570 comments] × 10 percent). The proposed rule would specify what must be included in such a request (§ 1102.26(b)); most of the information will be known or readily attainable by the person or entity filing the request, but we estimate it will take longer to file a request to treat information as materially inaccurate than to file a request to treat information as confidential because with a request related to material inaccuracy one must provide evidence of the inaccuracy (§ 1102.26(b)(4)). We anticipate this will double the amount of time it takes to file the request, or 30 minutes for an electronic request and 60 minutes for a paper request. Employing the same assumptions concerning the method of submission, we estimate that there will be 1,726 electronic requests to treat information as materially inaccurate (2,271 total requests × 76 percent electronic = 1,726). As each electronic request is estimated to take 30 minutes, we estimate the resulting burden to be 863 hours (1,726 requests × 30 minutes = 51,780 minutes, or 863 burden hours). Similarly, 545 paper requests (2,271 requests × 24 percent paper = 545), at 60 minutes each to complete, results in a burden of 545 hours (545 paper requests × 60 minutes = 32,700 minutes, or 545 hours).

The total estimated burden, therefore, is 37,129 hours.

In compliance with the Paperwork Reduction Act of 1995 (44 U.S.C. 3507(d)), we have submitted the information collection requirements of this rule to OMB for review. Interested persons are requested to fax comments regarding information collection by June 23, 2010, to the Office of Information and Regulatory Affairs, OMB (*see* **ADDRESSES**).

VIII. Executive Order 12988

According to Executive Order 12988 (February 5, 1996), agencies must state in clear language the preemptive effect, if any, of new regulations. This regulation is issued under the authority of the CPSA, wherein preemption is discussed in section 26 of the CPSA. Section 26 of the CPSA only addresses the preemptive effect of consumer product safety standards under the CPSA. The current rule is not a consumer product safety standard under the CPSA. Accordingly, the Commission has determined that this rule does not contain requirements that impact the States.

IX. Regulatory Flexibility Act

The Regulatory Flexibility Act ("RFA") generally requires that agencies review proposed rules for their potential economic impact on small entities, including small businesses. Section 603 of the RFA calls for agencies to prepare and make available for public comment an initial regulatory flexibility analysis describing the impact of the proposed rule on small entities and identifying impact-reducing alternatives. 5 U.S.C. 603. Section 605(b) of the RFA, however, states that this requirement does not apply if the head of the agency certifies that the rule will not, if promulgated, have a significant economic impact on a substantial number of small entities, and the agency provides an explanation for that conclusion.

Preliminary analysis shows the proposed rule will have little or no effect on small businesses. The rule would implement the statutory requirements set forth in section 6A of the CPSA for the establishment and maintenance of a publicly available database containing reports of harm involving the use of consumer products, as well as comments received by manufacturers regarding such reports of harm identifying their products. The agency anticipates that the new database will likely increase the number of consumer-generated reports over the number of incident reports currently filed with the Commission. However, because of their smaller sales volumes, we believe small manufacturers are less likely to receive an incident report and, hence, to experience any impacts. Moreover, even if a small firm does choose to respond to an incident report, we believe the amount of time to do so would not likely be more than a few hours, on average. Before the Commission can certify that the rule will not have a significant economic impact on a substantial number of small entities additional information on these points would be helpful. Therefore, the Commission invites comment on this

analysis and preliminary certification statement.

X. Effective Date

The Administrative Procedure Act ("APA") generally requires that the effective date of a rule be at least 30 days after publication of a final rule. 5 U.S.C. 553(d). The Commission intends that any final rule based on this proposal will become effective 30 days after the date of publication of a final rule in the **Federal Register.** However, as the database is still being developed, and the requirements set forth in this rule will only be applicable once the public database is established, the Commission intends to state, in the final rule, when the database will become operational.

List of Subjects in 16 CFR Part 1102

Administrative practice and procedure, Business and industry, Consumer protection, Reporting and recordkeeping requirements.

For the reasons stated above, the Commission proposes to amend Title 16 of the Code of Federal Regulations by adding a new part 1102 to read as follows:

PART 1102—PUBLICLY AVAILABLE CONSUMER PRODUCT SAFETY INFORMATION DATABASE

Subpart A—Background and Definitions

Sec.
1102.2 Purpose.
1102.4 Scope.
1102.6 Definitions.

Subpart B—Content Requirements

1102.10 Reports of harm.
1102.12 Manufacturer comments.
1102.14 Recall notices.
1102.16 Additional information.

Subpart C—Procedural Requirements

1102.20 Transmission of reports of harm to the identified manufacturer or private labeler.
1102.24 Designation of confidential information.
1102.26 Designation of materially inaccurate information.
1102.28 Publication of reports of harm.
1102.30 Publication of manufacturer comments.

Subpart D—Notice and Disclosure Requirements

1102.42 Disclaimers.
1102.44 Applicability of sections 6(a) and (b) of the CPSA.

Authority: 15 U.S.C. 2051, 2051 note, 2052, 2055, 2055a, 2065, 2068, 2070, 2071, 2072, 2076, 2078, 2080, 2087.

Subpart A—Background and Definitions

§ 1102.2 Purpose.

This part sets forth the Commission's interpretation, policy, and procedures with regard to the establishment and maintenance of a Consumer Product Safety Information Database (also referred to as the "Database") on the safety of consumer products and other products or substances regulated by the Commission.

§ 1102.4 Scope.

This part applies to the content, procedure, notice, and disclosure requirements of the Consumer Product Safety Information Database, including all information published therein.

§ 1102.6 Definitions.

(a) Except as specified in paragraph (b) of this section, the definitions in section 3 of the Consumer Product Safety Act (CPSA) (15 U.S.C. 2052) apply to this part.

(b) For purposes of this part, the following definitions apply:

(1) *Additional information* means any information that the Commission determines is in the public interest to include in the Consumer Product Safety Database.

(2) *Commission* or *CPSC* means the Consumer Product Safety Commission.

(3) *Consumer product* means a consumer product as defined in section 3(a)(5) of the CPSA and also includes any other products or substances regulated by the Commission.

(4) *Consumer Product Safety Information Database* means the database on the safety of consumer products established and maintained by the CPSC as described in section 6A of the CPSA.

(5) *Harm* means any injury, illness, or death, or any risk of injury, illness, or death, as determined by the Commission.

(6) *Mandatory recall notice* means any notice to the public required of a firm pursuant to order issued by the Commission under section 15(c) of the CPSA.

(7) *Manufacturer comment* means a comment made by a manufacturer or private labeler of a consumer product in response to a report of harm transmitted to such manufacturer or private labeler.

(8) *Report of harm* means any information submitted to the Commission through the manner described in § 1102.10(b) regarding an injury, illness, or death, or any risk of injury, illness, or death as determined by the Commission, relating to the use of a consumer product.

(9) *Submitter of a report of harm* means any person or entity that submits a report of harm.

(10) *Voluntary recall notice* means any notice to the public by the Commission relating to a voluntary corrective action, including a voluntary recall of a consumer product taken by a manufacturer in consultation with the Commission.

Subpart B—Content Requirements

§ 1102.10 Reports of harm.

(a) *Who may submit.* The following persons or entities may submit reports of harm:

(1) *Consumers* including, but not limited to, users of consumer products, family members, relatives, parents, guardians, friends, and observers of the consumer products being used;

(2) *Local, State, or Federal government agencies* including, but not limited to, local government agencies, school systems, social services, child protective services, State attorneys general, State agencies, and all executive and independent Federal agencies as defined in Title 5 of the United States Code;

(3) *Health care professionals* including, but not limited to, medical examiners, coroners, physicians, nurses, physician's assistants, hospitals, chiropractors, acupuncturists;

(4) *Child service providers* including, but not limited to, day care centers, day care providers, pre-kindergarten school, and child care providers;

(5) *Public safety entities* including, but not limited to, police, fire, ambulance, emergency medical services, Federal, State, and local law enforcement entities, and other public safety officials; and

(6) *Others* including, but not limited to, attorneys, professional engineers, investigators, nongovernmental organizations, consumer advocates, consumer advocacy organizations, and trade associations.

(b) *Manner of submission.* To be entered into the publicly accessible database, reports of harm must be submitted to the CPSC using one of the following methods:

(1) Internet submissions through the CPSC's Internet Web site on an electronic incident report form specifically developed to collect such information.

(2) Telephonic submissions through a CPSC call center where the information is entered on the electronic incident form.

(3) Electronic mail or facsimile directed to the [Name of office will appear in final rule], provided that the

submitter completes the incident report form available for download on the CPSC's Internet Web site specifically developed to collect such information.

(4) Written submissions through the [Office and address will appear in final rule]. The Commission will accept only those written reports of harm that use the incident report form developed for the CPSC's Internet Web site; or

(5) Other means the Commission subsequently makes available.

(c) *Size limit of reports of harm.* The Commission may, in its discretion, limit the data size of reports of harm, which may include attachments submitted where such reports of harm and attachments may negatively impact the technological or operational performance of the system.

(d) *Minimum requirements for publication.* Subject to §§ 1102.24 and 1102.26, the Commission will publish in the Consumer Product Safety Database reports of harm containing all of the following information:

(1) *Description of the consumer product.* The description of the consumer product must, at a minimum, include a word or phrase sufficient to distinguish the product as a consumer product, a component part of a consumer product, or a product or substance regulated by the Commission. A description of a consumer product includes, but is not limited to, the name including the brand name of the consumer product, model, serial number, date of manufacture (if known) or date code, date of purchase, price paid, retailer, or any other descriptive information about the product.

(2) *Identity of the manufacturer or private labeler.* The name of one or more manufacturers or private labelers of the consumer product. Identification of a manufacturer or private labeler includes, but is not limited to, a mailing address, phone number, or electronic mail address.

(3) *Description of the harm.* A brief narrative description of an illness, injury, or death, or risk of illness, injury, or death related to use of the consumer product. Examples of a description of harm or risk of harm include but are not limited to: death, asphyxiation, lacerations, burns, abrasions, contusions, fractures, choking, poisoning, suffocation, amputation, or any other narrative description relating to a bodily harm or risk of bodily harm. Incident reports that relate solely to the cost or quality of a consumer product, with no discernable bodily harm or risk of bodily harm, do not constitute "harm" for purposes of this part. A description of harm may, but need not, include the date on which the harm occurred or manifested itself, and the severity of any injury and whether any medical treatment was received.

(4) *Contact information.* The submitter's first name, last name, and complete mailing address. Although this information will not be published in the database it is required information for the report of harm. Submitters also may, but are not required to, provide an electronic mail address and a phone number to allow for efficient and timely contact regarding a report of harm when necessary.

(5) *Verification.* A submitter of a report of harm must affirmatively verify that he or she has reviewed the report of harm and that the information contained therein is true and accurate to the best of the submitter's knowledge, information and belief. Verification procedures for each method of submission will be specified. As part of verifying the report, submitters of reports of harm must indicate which category they are in (consumer, government agency, health care professional etc.) Although this information will not be published in the database it is required information for the report of harm.

(6) *Consent.* A submitter of a report of harm must consent to publication of the report of harm in the Database if he or she wants the information to be included in the Database.

(e) *Additional information requested on report of harm.* The minimum requirements (at § 1102.10(d)) for publication of a report of harm in the Database do not restrict the Commission from choosing to seek other categories of voluntary information in the future.

(f) *Information not published.* The Commission will exclude the following information provided on a report of harm from publication in the Database:

(1) Name and contact information of the submitter of a report of harm;

(2) Victim's name, if the victim has not provided consent, and contact information;

(3) Photographs that in the determination of the Commission are not in the public interest, including photographs that depict a person or injury or constitute an invasion of personal privacy based on the Privacy Act of 1974, Public Law 93–579 as amended.

(4) Medical records without the consent of the person about whom such records pertain or without the consent of his or her parent, guardian, or appropriate legally authorized representative;

(5) Confidential information as set forth in § 1102.24;

(6) Materially inaccurate information as set forth in § 1102.26;

(7) Submitters of reports of harm may retract reports at any time, if they indicate in writing to the Commission that they supplied materially inaccurate information; and/or

(8) Any other information submitted on or with a report of harm the inclusion of which in the Database the Commission determines is not in the public interest to publish. The Commission's determination shall consider whether the information is related to a product safety purpose served by the Database including whether or not the information helps Database users to:

(i) Identify a consumer product;

(ii) Identify a manufacturer or private labeler of a consumer product;

(iii) Understand a harm or risk of harm related to the use of a consumer product; or

(iv) Understand the relationship between a submitter of a report of harm and the victim.

(g) *Reports of harm from persons under the age of 18.* The Commission will not accept any report of harm when the report of harm is or was submitted by anyone under the age of 18 without consent of the parent or guardian of that person.

(h) *Incomplete reports of harm.* Any information received by the Commission related to a report of harm that does not meet the requirements for submission or publication will not be published but will be maintained for internal use.

(i) *Official records of the Commission.* All reports of harm that are accepted by the Commission become official records of the Commission in accordance with 16 CFR 1015.1. Alteration (or disposition) of any such records will only be in accordance with the procedures specified in this part.

§ 1102.12 Manufacturer comments.

(a) *Who may submit.* A manufacturer or private labeler may submit a comment related to a report of harm if the report of harm identifies such manufacturer or private labeler.

(b) *How to submit.* A manufacturer or private labeler may submit comments to the CPSC using one of the following methods:

(1) A manufacturer or private labeler who registers with the Commission as described in § 1102.20(e) may submit comments through a manufacturer portal maintained on the CPSC's Internet Web site;

(2) A manufacturer or private labeler may submit comments by electronic mail, directed to the Office of the

Secretary at [e-mail address will appear in final rule]; or

(3) A manufacturer or private labeler may submit written comments directed to the Office of the Secretary at 4330 East West Highway, Bethesda, MD 20814–4408.

(c) *What must be submitted.* Subject to § 1102.24, the Commission will publish manufacturer comments related to a report of harm transmitted to a manufacturer or private labeler in the Database if such manufacturer comment meets the following requirements:

(1) *Manufacturer comment relates to report of harm.* The manufacturer or private labeler's comment must relate to information contained in a specific report of harm that identifies such manufacturer or private labeler and that is received in the Database.

(2) *Unique identifier.* A manufacturer comment must state the unique identifier provided by the CPSC.

(3) *Verification.* A manufacturer or private labeler must verify that it has reviewed the report of harm and the comment related to the report of harm and that the information contained in the comment is true and accurate to the best of the firm's knowledge, information, and belief.

(4) *Request for publication.* When a manufacturer or private labeler submits a comment regarding a report of harm, it may request that the Commission publish such comment in the Database. A manufacturer or private labeler must affirmatively request publication of the comment, and consent to such publication in the Database, for each comment submitted to the CPSC.

(d) *Information published.* Subject to § 1102.24, the Commission will publish a manufacturer comment and the date of its submission to the CPSC in the Database if the comment meets the minimum requirements for publication as described in paragraph (c) of this section.

(e) *Information not published.* The Commission will not publish in the Database consents and verifications associated with a manufacturer comment.

§ 1102.14 Recall notices.

All information presented in a voluntary or mandatory recall notice that has been made available to the public shall be accessible and searchable in the Database.

§ 1102.16 Additional information.

In addition to reports of harm, manufacturer comments, and recall notices, the CPSC shall include in the Database any additional information it determines to be in the public interest, consistent with the requirements of section 6(a) and (b) of the CPSA.

Subpart C—Procedural Requirements

§ 1102.20 Transmission of reports of harm to the identified manufacturer or private labeler.

(a) *Information transmitted.* Except as provided in paragraphs (a)(1) through (a)(3) of this section, the Commission will transmit all information provided in a report of harm which meets the minimum requirements for publication in the Database to the manufacturer or private labeler identified in a report of harm. The following information will not be transmitted to a manufacturer or private labeler:

(1) Name and contact information for the submitter of the report of harm, unless such submitter provides express written consent to provide such information to the manufacturer or private labeler;

(2) Photographs that depict a person or an injury unless the submitter of the report of harm consents, in writing, to provide such photograph(s) to the manufacturer or private labeler;

(3) Medical records, unless the person about whom such records pertain, or his or her parent, guardian, or appropriate legally authorized representative, consents to providing such records to the manufacturer or private labeler.

(b) *Limitation on use of contact information.* A manufacturer or private labeler who receives name and contact information for the submitter of a report of harm and/or a victim must not use or disseminate such information to any other party for any other purpose other than verification of information contained in a report of harm. Verification of information contained in a report of harm must not include activities such as sales, promotion, marketing, warranty, or any other commercial purpose. Verification of information contained in a report of harm is limited to verification of the:

(1) Identity of the submitter and/or the victim, including name, location, age and gender;

(2) Consumer product, including serial or model number, date code, color, or size;

(3) Harm or risk of harm related to the use of the consumer product; and/or

(4) Description of the incident related to use of the consumer product.

(c) *Timing.* To the extent practicable, the Commission will transmit a report of harm to the manufacturer or private labeler within five business days of submission of the completed report of harm. Examples of circumstances that may arise that may make transmission of the report of harm impracticable within five business days include, but are not limited to:

(1) The manufacturer or private labeler is out of business with no identifiable successor;

(2) The submitter misidentified a manufacturer or private labeler; or

(3) The report of harm contained inaccurate or insufficient contact information for a manufacturer or private labeler; or

(4) The Commission cannot locate valid contact information for a manufacturer or private labeler.

(d) *Method of transmission.* The Commission will use the method of transmission and contact information provided by the manufacturer or private labeler. The Commission will transmit reports of harm to a manufacturer or private labeler who has registered with the Commission as described in paragraph (e) of this section. If a manufacturer or private labeler has not registered with the Commission, the Commission will send reports of harm through the United States mail to the firm's principal place of business unless the Commission selects another equally effective method of transmission.

(e) *Size limits of manufacturer comments.* The Commission may, in its discretion, limit the data size of comments, which may include attachments submitted, where such comments and attachments may negatively impact the technological or operational performance of the system.

(f) *Manufacturer registration.* Manufacturers and private labelers may register with the Commission to select a preferred method for receiving reports of harm which identify such firm as the manufacturer or private labeler. Manufacturers and private labelers that choose to register with the Commission must:

(1) Register with the Commission through a process identified for such registration;

(2) Provide and maintain updated contact information for the firm, including the name of the firm, title of a person to whom reports of harm should be directed, complete mailing address, telephone number, electronic mail address, and Web site address (if any); and

(3) Select a specified method to receive reports of harm that identify the firm as the manufacturer or private labeler of a consumer product.

(g) *Manufacturer comments received after one year.* A manufacturer or private labeler who receives a report of harm from the CPSC may comment on the information contained in such report of harm. The Commission, in its

discretion, where it determines it is in the public interest, may choose not to publish a manufacturer comment to the Database if such comment is received more than one year after transmission of the report of harm to the manufacturer or private labeler.

§ 1102.24 Designation of confidential information.

(a) For purposes of this section, "confidential information" is considered to be information that contains or relates to a trade secret or other matter referred to in 18 U.S.C. 1905 or that is subject to 5 U.S.C. 552(b)(4).

(b) A manufacturer or private labeler identified in a report of harm and who receives a report of harm from the CPSC may review such report of harm for confidential information and request that portions of the report of harm be designated as confidential information. Each requester seeking such a designation of confidential information bears the burden of proof and must:

(1) Specifically identify the exact portion(s) of the report of harm claimed to be confidential;

(2) State whether the information claimed to be confidential has ever been released in any manner to a person who was not an employee or in a confidential relationship with the company;

(3) State whether the information so specified is commonly known within the industry or is readily ascertainable by outside persons with a minimum of time and effort;

(4) State the company's relationship with the victim and/or submitter of the report of harm and how the victim and/or submitter of the report of harm came to be in possession of such allegedly confidential information;

(5) State how the release of the information would be likely to cause substantial harm to the company's competitive position; and

(6) State whether the person submitting the request for treatment as confidential information is authorized to make claims of confidentiality on behalf of the person or organization concerned.

(c) *Manner of submission.* Requests for designation of confidential information may be submitted in the same manner as manufacturer comments as described in § 1102.12(b). A request for designation of confidential treatment must be conspicuously marked.

(d) *Timing of submission.* A request for designation of confidential information must be received by the Commission in a timely manner. If a request for confidential treatment is submitted in a timely fashion, the Commission may, in its discretion, withhold a report of harm from publication in the Database until it makes a determination regarding confidential treatment.

(e) *Assistance with defense.* No request to redact confidential information from a report of harm pursuant to 5 U.S.C. 552(b)(4) should be made by any person who does not intend in good faith, and so certifies in writing, to assist the Commission in the defense of any judicial proceeding that might thereafter be brought to compel the disclosure of information that the Commission has determined to be a trade secret or privileged or confidential commercial or financial information.

(f) *Commission determination of confidentiality.* If the Commission determines that information in a report of harm is confidential, the Commission shall:

(1) Notify the manufacturer or private labeler;

(2) Redact such confidential information in the report of harm; and

(3) Publish the report of harm in the Database without such confidential information.

(g) *Commission determination of no confidentiality.* If the Commission determines that a report of harm does not contain confidential information, the Commission shall:

(1) Notify the manufacturer or private labeler; and

(2) Publish the report of harm, if not already published, in the Database.

(h) *Removal of confidential information.* As stated at 6A(c)(1)(C)(iii) of the CPSA, to seek removal of alleged confidential information that has been published in the Database, a manufacturer or private labeler may bring an action in the district court of the United States in the district in which the complainant resides, or has its principal place of business, or in the United States District Court for the District of Columbia.

§ 1102.26 Designation of materially inaccurate information.

(a) For purposes of this section, the following definitions apply:

(1) *Materially inaccurate information in a report of harm* means information that is false or misleading in a significant and relevant way that creates or has the potential to create a substantially erroneous or substantially mistaken belief in a Database user about information in a report of harm relating to:

(i) The identification of a consumer product;

(ii) The identification of a manufacturer or private labeler; or

(iii) The harm or risk of harm related to use of the consumer product.

(2) *Materially inaccurate information in a manufacturer comment* means information that is false or misleading in a significant and relevant way that creates or has the potential to create a substantially erroneous or substantially mistaken belief in a Database user relating to:

(i) The nature, scope, liability, or cause of a harm or risk of harm related to the use of a consumer product;

(ii) The status of a Commission, manufacturer, or private labeler investigation;

(iii) The identity of the firm or firms responsible for the importation, manufacture, distribution, sale, or holding for sale a consumer product;

(iv) Whether the manufacturer or private labeler is engaging in a corrective action (when such action has not been approved by the Commission); or

(v) Whether the manufacturer has taken, or promised to take, any other action with regard to the product.

(b) *Request for designation of materially inaccurate information.* Any person or entity reviewing a report of harm or manufacturer comment, either before or after publication in the Database, may request that the report of harm or manufacturer comment, or portions of such report of harm or manufacturer comment, be excluded from the Database or corrected by the Commission because it contains materially inaccurate information. A requester seeking an exclusion or correction must:

(1) State the unique identifier of the report of harm or manufacturer comment to which the request for a determination of materially inaccurate information pertains;

(2) Specifically identify the exact portion(s) of the report of harm or the manufacturer comment claimed to be materially inaccurate;

(3) State the basis for the allegation that such information is materially inaccurate;

(4) Provide evidence, which may include documents, statements, electronic mail, internet links, photographs, or any other evidence, sufficient for the Commission to make a determination that the designated information is materially inaccurate;

(5) State what relief the requester is seeking: exclusion of the entire report of harm or manufacturer comment; redaction of specific information; correction of specific information; or the addition of information to correct the material inaccuracy;

(6) State whether and how an alleged material inaccuracy may be corrected without removing or excluding an entire report of harm or manufacturer comment; and/or

(7) State whether the person submitting the allegation of material inaccuracy is authorized to make claims of material inaccuracy on behalf of the person or organization concerned.

(c) *Manner of submission—Length of request and expedited review.* The Commission strongly recommends requesters seeking an expedited review of claims of materially inaccurate information to limit the length of the request described in § 1102.26(b) to no more than five pages, including attachments, to allow for the expedited review of the request. Regardless of length, all submissions will be reviewed.

(1) *Manufacturers and private labelers.* A manufacturer or private labeler may request a Commission determination of materially inaccurate information related to a report of harm in the same manner as described in § 1102.12(b). Such requests should be conspicuously marked.

(3) *All other requests.* All other requests for a Commission determination of materially inaccurate information contained in a report of harm or manufacturer comment made by any other person or firm must be submitted to the CPSC using one of the methods listed below. The request seeking a Commission determination of materially inaccurate information may be made through:

(i) *Electronic mail.* By electronic mail directed to the Office of the Secretary at [e-mail address will appear in final rule]; or

(ii) *Paper-Based.* Written submission directed to the Office of the Secretary at [mailing address will appear in final rule].

(d) *Timing of submission.* A request for a Commission determination regarding materially inaccurate information may be submitted at any time. If a request for determination of materially inaccurate information is submitted prior to publication in the database, the Commission may withhold a report of harm from publication in the Database until it makes a determination. Absent such a determination, the Commission will generally publish reports of harm on the tenth business day after transmitting a report of harm.

(e) *Assistance with defense.* No request for a determination of materially inaccurate information should be made by any person who does not intend in good faith, and so certifies in writing, to assist the Commission in the defense of any judicial proceeding that might thereafter be brought to compel the disclosure of information that the Commission has determined to be materially inaccurate information.

(f) *Notice.* The Commission shall notify the person or firm requesting a determination regarding materially inaccurate information of its determination and method of resolution after resolving such request.

(g) *Commission determination of material inaccuracy before publication.* If the Commission determines that the requested information in a report of harm or manufacturer comment is materially inaccurate information before it is published in the Database, the Commission may:

(1) Decline to add the materially inaccurate report of harm or manufacturer comment to the Database;

(2) Correct the materially inaccurate information, and, if the minimum requirements for publication as set forth in §§ 1102.10(c) and 1102.12(c) are met, publish the report of harm or manufacturer comment in the Database; or

(3) Add information to the report of harm or the manufacturer comment to correct the materially inaccurate information, and, if the minimum requirements for publication as set forth in §§ 1102.10(c) and 1102.12(c) are met, publish the report of harm or manufacturer comment in the Database.

(h) *Commission determination of material inaccuracy after publication.* If the Commission determines, after an investigation, that the requested designated information in a report of harm or manufacturer comment contains materially inaccurate information after the report of harm or manufacturer comment has been published in the Database, the Commission shall, no later than seven business days after such determination:

(1) Remove the report of harm or manufacturer comment from the Database, including any associated documents, photographs, or comments;

(2) Correct the information, and, if the minimum requirements for publication as set forth in §§ 1102.10(c) and 1102.12(c) are met, maintain the report of harm or manufacturer comment in the Database; or

(3) Add information to the report of harm or the manufacturer comment to correct the materially inaccurate information, and, if the minimum requirements for publication as set forth in §§ 1102.10(c) and 1102.12(c) are met, maintain the report of harm or manufacturer comment in the Database.

(i) *Commission discretion.*

(1) In exercising its discretion to remove, correct or add information to correct materially inaccurate information contained in a report of harm or manufacturer comment, the Commission shall preserve the integrity of information received for publication in the Database whenever possible. Subject to §§ 1102.10(c) and 1102.12(c), the Commission shall favor correction and addition to correction over exclusion of entire reports of harm and manufacturer comments where possible.

(2) *Expedited determinations.* Where a manufacturer has filed a request for a correction or exclusion within the recommended page limit in § 1102.26(c)(1), the Commission shall attempt, where practicable, to make an expedited determination of a claim of material inaccuracy. Given the requirement of section 6A of the CPSA that reports of harm be published, the Commission will generally publish reports of harm on the tenth business day after transmitting a report of harm where either the recommended page limit of comments has been exceeded or where the Commission has been otherwise unable to make a determination regarding a claim of material inaccuracy prior to the statutorily mandated publication date. In such instances, the Commission will make any necessary correction, exclusion, or addition not later than 7 business days after making a determination that there is materially inaccurate information in the report of harm. Manufacturer comments will be published at the same time as the report of harm is published or as soon as practicable thereafter as described in § 1102.30.

(j) *Commission determination of no material inaccuracy.* If the Commission determines that the requested information in a report of harm does not contain materially inaccurate information, the Commission will:

(1) Notify the requester of its determination;

(2) Publish the report of harm or manufacturer comment, if not already published, in the Database if it meets the minimum requirements set forth in §§ 1102.10, 1102.12 and 1102.24.

(k) *Commission action in absence of request.* The Commission may review a report of harm or manufacturer comment for materially inaccurate information on its own initiative, following the same notice and procedural requirements set forth in paragraphs (g) through (j) of this section.

§ 1102.28 Publication of reports of harm.

(a) *Timing.* Subject to §§ 1102.10, 1102.24, and 1102.26, the Commission

will publish reports of harm that meet the requirements for publication in the Database. The Commission will publish reports of harm as soon as practicable but not later than the tenth business day after such report of harm is transmitted to the manufacturer or private labeler by the CPSC.

(b) *Exceptions.* The Commission may publish a report of harm that meets the requirements of § 1102.10(c) in the Database beyond the ten business day time frame set forth in paragraph (a) of this section if the Commission determines a report of harm misidentifies or fails to identify all manufacturers or private labelers. Such information must be corrected through the procedures set forth in § 1102.26 for materially inaccurate information in a report of harm. Once a manufacturer or a private labeler has been identified correctly, the time frame set forth in paragraph (a) of this section shall apply.

§ 1102.30 Publication of manufacturer comments.

(a) *Timing.* Subject to §§ 1102.12 and 1102.26, the Commission will publish in the Database manufacturer comments submitted in response to a report of harm that meet the minimum requirements set forth in § 1102.12(c). This publication will occur at the same time as the report of harm is published or as soon as practicable thereafter. Examples of circumstances that may make it impracticable to publish a manufacturer comment at the same time as a report of harm include, but are not limited to:

(1) The Commission did not receive the comment until on or after the publication date of the report of harm; or

(2) The Commission is resolving a claim that the manufacturer comment contains materially inaccurate information.

Subpart D—Notice and Disclosure Requirements

§ 1102.42 Disclaimers.

The Commission does not guarantee the accuracy, completeness or adequacy of the contents of the Consumer Product Safety Information Database, particularly with respect to the accuracy, completeness, or adequacy of information submitted by persons outside of the CPSC. The Consumer Product Safety Information Database will contain a notice to this effect that will be prominently and conspicuously displayed on the database and on any documents that are printed from the database.

§ 1102.44 Applicability of sections 6(a) and (b) of the CPSA.

(a) *Generally.* Sections 6(a) and 6(b) of the CPSA shall not apply to the submission, disclosure and publication of information provided in a report of harm that meets the minimum requirements for publication in § 1102.10(c), in the Consumer Product Safety Information Database.

(b) *Limitation on construction.* Section 1102.42(a) shall not be construed to exempt from the requirements of sections 6(a) and 6(b) of the CPSA information received by the Commission pursuant to:

(1) Section 15(b) of the CPSA; or

(2) Any other mandatory or voluntary reporting program established between a retailer, manufacturer, or private labeler and the Commission.

Dated: May 7, 2010.

Todd A. Stevenson,

Secretary.

[FR Doc. 2010–11374 Filed 5–21–10; 8:45 am]

BILLING CODE 6355–01–P

Reader Aids

Federal Register

Vol. 75, No. 99

Monday, May 24, 2010

CUSTOMER SERVICE AND INFORMATION

Federal Register/Code of Federal Regulations	
General Information, indexes and other finding aids	**202–741–6000**
Laws	**741–6000**
Presidential Documents	
Executive orders and proclamations	**741–6000**
The United States Government Manual	**741–6000**
Other Services	
Electronic and on-line services (voice)	**741–6020**
Privacy Act Compilation	**741–6064**
Public Laws Update Service (numbers, dates, etc.)	**741–6043**
TTY for the deaf-and-hard-of-hearing	**741–6086**

ELECTRONIC RESEARCH

World Wide Web

Full text of the daily Federal Register, CFR and other publications is located at: **http://www.gpoaccess.gov/nara/index.html**

Federal Register information and research tools, including Public Inspection List, indexes, and links to GPO Access are located at: **http://www.archives.gov/federal__register**

E-mail

FEDREGTOC-L (Federal Register Table of Contents LISTSERV) is an open e-mail service that provides subscribers with a digital form of the Federal Register Table of Contents. The digital form of the Federal Register Table of Contents includes HTML and PDF links to the full text of each document.

To join or leave, go to **http://listserv.access.gpo.gov** and select *Online mailing list archives, FEDREGTOC-L, Join or leave the list (or change settings);* then follow the instructions.

PENS (Public Law Electronic Notification Service) is an e-mail service that notifies subscribers of recently enacted laws.

To subscribe, go to **http://listserv.gsa.gov/archives/publaws-l.html** and select *Join or leave the list (or change settings);* then follow the instructions.

FEDREGTOC-L and **PENS** are mailing lists only. We cannot respond to specific inquiries.

Reference questions. Send questions and comments about the Federal Register system to: **fedreg.info@nara.gov**

The Federal Register staff cannot interpret specific documents or regulations.

Reminders. Effective January 1, 2009, the Reminders, including Rules Going Into Effect and Comments Due Next Week, no longer appear in the Reader Aids section of the Federal Register. This information can be found online at **http://www.regulations.gov.**

CFR Checklist. Effective January 1, 2009, the CFR Checklist no longer appears in the Federal Register. This information can be found online at **http://bookstore.gpo.gov/.**

FEDERAL REGISTER PAGES AND DATE, MAY

23151–23556 3
23557–24362 4
24363–24780 5
24781–25098 6
25099–25758 7
25759–26054 10
26055–26642 11
26643–26880 12
26881–27154 13
27155–27398 14
27399–27630 17
27631–27922 18
27923–28180 19
28181–28462 20
28463–28750 21
28751–29182 24

CFR PARTS AFFECTED DURING MAY

At the end of each month, the Office of the Federal Register publishes separately a List of CFR Sections Affected (LSA), which lists parts and sections affected by documents published since the revision date of each title.

2 CFR

Ch. XX 27923

Proposed Rules:

Ch. 58 24494

3 CFR

Proclamations:

8505 23557
8506 23559
8507 23561
8508 24363
8509 24365
8510 24367
8511 24369
8512 24371
8513 25099
8514 25101
8515 26055
8516 26873
8517 26875
8518 26877
8519 27919
8520 28181
8521 28183
8522 28185

Executive Orders:

13541 26879
13542 27921

Administrative Orders:

Presidential Determinations:
No. 2010-07 of May 4, 2010 27161
No. 2010-08 of May 11, 2010 27163
Memorandums:
Memorandum of April 27, 2010 23563
Memorandum of May 3, 2010 24781
Memorandum of May 4, 2010 27155
Memorandum of May 11, 2010 27157
Notices:
Notice of May 3, 2010 24779
Notice of May 12, 2010 27399
Notice of May 13, 2010 27629

5 CFR

1600 24785
1650 24785

Proposed Rules:

Ch. XXXVII 27456

7 CFR

272 23565
273 23565
319 28187
360 23151
361 23151
760 25103
783 25103
985 27631
1205 24373
1410 27165
1416 25103

Proposed Rules:

319 27225
1530 23631
1980 27949

9 CFR

381 27925

Proposed Rules:

310 28763

10 CFR

72 .....24786, 27401
430 .....27170, 27182, 27926

Proposed Rules:

50 24324
72 .....25120, 27463
430 .....23191, 25121
431 .....24824, 25121, 27227
1703 27228

11 CFR

300 24375

Proposed Rules:

7 27456

12 CFR

204 24384
535 23565
985 23152
989 23152
1273 23152
1274 23152

Proposed Rules:

327 .....23516, 26681
360 .....27464, 27471
614 27660
652 27951
701 24497
956 23631
1267 23631

14 CFR

25 .....26643, 27926
39 .....23568, 23571, 23572, 23574, 23577, 23579, 24389, 26881, 26883, 26885, 27401, 27403, 27406, 27409, 27411, 27414, 27416, 27419, 27422, 27424, 28188, 28463, 28465, 28469, 28471, 28475, 28478, 28480, 28483, 28485, 28751
71 .....23580, 23581, 24789, 27427, 27637
73 .....28752, 28756

95 24790
97 ....25759, 25760
119 26645
Proposed Rules:
25 27662
27 ....24501, 24502
29 24502
39 ....23194, 24824, 25124, 25785, 25788, 25791, 26148, 26681, 26888, 26889, 27487, 27489, 27491, 27665, 27668, 27956, 27959, 27961, 27964, 27966, 27969, 27972, 27973, 28504, 28506
71 ....23636, 24504, 26148, 26150, 26151, 26891, 27229, 27493, 27494, 27495, 27496, 27670, 28765
110 25127
119 25127
121 25127
129 25127
135 25127

15 CFR
748 ....25763, 27185

16 CFR
Proposed Rules:
1102 29156
1107 28336
1109 28208
1120 ....27497, 27504

17 CFR
Proposed Rules:
200 23328
229 23328
230 23328
232 23328
239 23328
240 23328
243 23328
249 23328

18 CFR
1b 24392
40 26057
157 24392
Proposed Rules:
37 24828

19 CFR
101 24392

21 CFR
520 26646
522 26647
524 26647
556 24394
558 24394
Proposed Rules:
1140 27672

22 CFR
22 28188
Proposed Rules:
62 23196

24 CFR
202 23582

26 CFR
1 ....26061, 27927, 27934
54 27122
602 27122
Proposed Rules:
54 27141

28 CFR
20 24796
540 25110
Proposed Rules:
2 28221

29 CFR
471 28368
570 28404
579 28404
1202 26062
1206 26062
1910 27188
1915 27188
1926 ....27188, 27428
2590 27122
4022 27189
Proposed Rules:
1904 24505
1910 ....23677, 24509, 24835, 27237, 27239, 28862
1915 27239
1926 27239
2700 28223

30 CFR
250 23582

31 CFR
363 26089
551 24394
Proposed Rules:
210 27239

32 CFR
551 24394
706 ....25111, 27429

33 CFR
100 ....23587, 24400, 24799, 26091, 27430
117 ....23588, 24400, 25765, 28757
147 26091
165 ....23589, 23592, 24402, 24799, 25111, 25766, 26094, 26098, 26648, 26650, 27432, 27638, 27641, 28194, 28200, 28202, 28757
334 26100
Proposed Rules:
100 26152
117 28766
165 ....23202, 23209, 23212, 25794, 26155, 26157, 27507, 28769
173 25137
174 25137
181 25137
187 25137

34 CFR
Ch. II 28714

36 CFR
251 24801

37 CFR
Proposed Rules:
201 27248

38 CFR
Proposed Rules:
1 ....24510, 26160
17 26683
62 24514

39 CFR
232 28204
Proposed Rules:
111 24534

40 CFR
51 ....27191, 27643
52 ....23167, 24404, 24406, 24408, 25770, 25772, 25775, 25778, 26102, 26113, 26118, 26653, 27191, 27643, 27644, 27647, 27938, 27944
80 ....26026, 26121
81 ....24409, 26113, 26118, 27944
82 ....23167, 25781
85 25324
86 25324
180 ....24421, 24428, 26652, 26668, 26673, 27434, 27443, 28488
300 ....26131, 27192
600 25324
745 24802
Proposed Rules:
9 28227
51 28227
52 ....23640, 24542, 24544, 24844, 25797, 25798, 26685, 26892, 27510, 27512, 27514, 27975, 28227, 28509
60 27249
63 28227
80 ....26049, 26165
81 ....26685, 26898, 27514
82 25799
98 26904
180 28156
300 ....26166, 27255
745 ....24848, 25038

41 CFR
102-39 24820
300-3 24434
Ch. 301 24434
301-10 24434
301-51 24434
301-52 24434
301-70 24434
301-75 24434
302-6 24434
302-9 24434

42 CFR
410 26350
411 26350
414 26350
415 26350
424 24437
431 24437
485 26350
498 26350
Proposed Rules:
5 26167
50 28688
412 23852
413 23852
440 23852
441 23852
482 23852
485 23852
489 23852

43 CFR
8360 27452

44 CFR
64 ....24820, 28492
65 23593
67 ....23595, 23600, 23608, 28497
Proposed Rules:
67 ....23615, 23620, 28511

45 CFR
144 27122
146 27122
147 27122
149 24450
159 24470
Proposed Rules:
94 28688
160 23214
164 23214

46 CFR
388 28205
Proposed Rules:
520 ....25150, 26906, 28516
532 ....25150, 26906, 28516

47 CFR
0 28206
54 ....25113, 26137
73 ....25119, 27199
97 27200
Proposed Rules:
1 28517
Ch. I 26171, 26180
15 27256
17 28517
54 ....25156, 26906
64 26701
73 27977
76 ....27256, 27264
97 27272

48 CFR
212 27946
222 27946
252 ....25119, 27946
Proposed Rules:
4 28771
24 26916
49 28228
52 28771
207 25159
211 25160
212 25161
215 25165
225 25167
227 25161
234 25165
242 25165
252 ....25160, 25161, 25165
904 28772
952 28772
970 28772
9904 25982

49 CFR
105 27205
107 27205
171 27205

173 27205
174 27205
176 27205
177 27205
179 27205
383 28499
391 28499
531 25324
533 25324
536 25324
537 25324
538 25324

Proposed Rules:

26 25815
40 26183
171 27273
173 27273
213 25928
220 27672
238 25928
594 25169

50 CFR

222 27649
300 27216
622 ....23186, 24822, 26679, 27217, 27658, 28760
635 ....26679, 27217
640 27217
648 ....27219, 27221, 28762
654 ....26679, 27217
660 24482
679 ....23189, 28502
660 ....23615, 23620

Proposed Rules:

17 ....23654, 24545, 27690
20 27144
83 24862
224 25174
253 24549
660 26702
665 28540
697 26703

LIST OF PUBLIC LAWS

This is a continuing list of public bills from the current session of Congress which have become Federal laws. It may be used in conjunction with "P L U S" (Public Laws Update Service) on 202–741–6043. This list is also available online at *http://www.archives.gov/federal-register/laws.html*.

The text of laws is not published in the **Federal Register** but may be ordered in "slip law" (individual pamphlet) form from the Superintendent of Documents, U.S. Government Printing Office, Washington, DC 20402 (phone, 202–512–1808). The text will also be made available on the Internet from GPO Access at *http://www.gpoaccess.gov/plaws/index.html*. Some laws may not yet be available.

H.R. 3714/P.L. 111–166

Daniel Pearl Freedom of the Press Act of 2009 (May 17, 2010; 124 Stat. 1186)

Last List May 19, 2010

Public Laws Electronic Notification Service (PENS)

PENS is a free electronic mail notification service of newly enacted public laws. To subscribe, go to *http://listserv.gsa.gov/archives/publaws-l.html*

Note: This service is strictly for E-mail notification of new laws. The text of laws is not available through this service. **PENS** cannot respond to specific inquiries sent to this address.