AUTHENTICATED
U.S. GOVERNMENT
INFORMATION
GPO

SUBCHAPTER C—AIR PROGRAMS (CONTINUED)

PART 52—APPROVAL AND PROMULGATION OF IMPLEMENTATION PLANS

Subpart A—General Provisions

Sec.
52.01 Definitions.
52.02 Introduction.
52.04 Classification of regions.
52.05 Public availability of emission data.
52.06 Legal authority.
52.07 Control strategies.
52.08 Rules and regulations.
52.09 Compliance schedules.
52.10 Review of new sources and modifications.
52.11 Prevention of air pollution emergency episodes.
52.12 Source surveillance.
52.13 Air quality surveillance; resources; intergovernmental cooperation.
52.14 State ambient air quality standards.
52.15 Public availability of plans.
52.16 Submission to Administrator.
52.17 Severability of provisions.
52.18 Abbreviations.
52.20 Attainment dates for national standards.
52.21 Prevention of significant deterioration of air quality.
52.23 Violation and enforcement.
52.24 Statutory restriction on new sources.
52.26 Visibility monitoring strategy.
52.27 Protection of visibility from sources in attainment areas.
52.28 Protection of visibility from sources in nonattainment areas.
52.29 Visibility long-term strategies.
52.30 Criteria for limiting application of sanctions under section 110(m) of the Clean Air Act on a statewide basis.
52.31 Selection of sequence of mandatory sanctions for findings made pursuant to section 179 of the Clean Air Act.
52.32 Sanctions following findings of SIP inadequacy.

Subpart B—Alabama

52.50 Identification of plan.
52.51 Classification of regions.
52.53 Approval status.
52.56 Review of new sources and modifications.
52.57 Control strategy: Sulfur oxides.
52.58 Control strategy: Lead.
52.60 Significant deterioration of air quality.
52.61 Visibility protection.
52.62 Control strategy: sulfur oxides and particulate matter.
52.63 PM_{10} State Implementation Plan development in group II areas.
52.64 [Reserved]
52.65 Control strategy: Nitrogen Oxides

Subpart C—Alaska

52.70 Identification of plan.
52.71 Classification of regions.
52.72 Approval status.
52.73—52.74 [Reserved]
52.75 Contents of the approved state-submitted implementation plan.
52.76—52.81 [Reserved]
52.82 Extensions.
52.83—52.95 [Reserved]
52.96 Significant deterioration of air quality.

Subpart D—Arizona

52.120 Identification of plan.
52.121 Classification of regions.
52.122 [Reserved]
52.123 Approval status.
52.124 Part D disapproval.
52.125 Control strategy and regulations: Sulfur oxides.
52.126 Control strategy and regulations: Particulate matter.
52.127—52.128 [Reserved]
52.129 Review of new sources and modifications.
52.130 Source surveillance.
52.131—52.132 [Reserved]
52.133 Rules and regulations.
52.134 Compliance schedules.
52.135 Resources.
52.136 Control strategy for ozone: Oxides of nitrogen.
52.137 [Reserved]
52.138 Conformity procedures.
52.139 [Reserved]
52.140 Monitoring transportation trends.
52.141—52.143 [Reserved]
52.144 Significant deterioration of air quality.
52.145 Visibility protection.
52.146 Particulate matter (PM–10) Group II SIP commitments.

Subpart E—Arkansas

52.170 Identification of plan.
52.171 Classification of regions.
52.172 Approval status.
52.173—52.180 [Reserved]
52.181 Significant deterioration of air quality.
52.183 Small business assistance program.

Subpart F—California

52.219 Identification of plan—conditional approval.
52.220 Identification of plan.
52.221 Classifications of regions.
52.222 Negative declarations.
52.223 Approval status.
52.224 General requirements.
52.225 Legal authority.
52.226 Control strategy and regulations: Particulate matter, San Joaquin Valley and Mountain Counties Intrastate Regions.
52.227 Control strategy and regulations: Particulate matter, Metropolitan Los Angeles Intrastate Region.
52.228 Regulations: Particulate matter, Southeast Desert Intrastate Region.
52.229 Control strategy and regulations: Photochemical oxidants (hydrocarbons), Metropolitan Los Angeles Intrastate Region.
52.230 Control strategy and regulations: Nitrogen dioxide.
52.231 Regulations: Sulfur oxides.
52.232 Part D conditional approval.
52.233 Review of new sources and modifications.
52.234 Source surveillance.
52.235 Control strategy for ozone: Oxides of nitrogen.
52.236 Rules and regulations.
52.237 Part D disapproval.
52.238 [Reserved]
52.239 Alternate compliance plans.
52.240 Compliance schedules.
52.241—52.245 [Reserved]
52.246 Control of dry cleaning solvent vapor losses.
52.247—52.251 [Reserved]
52.252 Control of degreasing operations.
52.253 Metal surface coating thinner and reducer.
52.254 Organic solvent usage.
52.255 Gasoline transfer vapor control.
52.256 Control of evaporative losses from the filling of vehicular tanks.
52.257—52.262 [Reserved]
52.263 Priority treatment for buses and carpools—Los Angeles Region.
52.264—52.268 [Reserved]
52.269 Control strategy and regulations: Photochemical oxidants (hydrocarbons) and carbon monoxide.
52.270 Significant deterioration of air quality.
52.271 Malfunction regulations.
52.272 Research operations exemptions.
52.273 Open burning.
52.274 California air pollution emergency plan.
52.275 Particulate matter control.
52.276 Sulfur content of fuels.
52.277 Oxides of nitrogen, combustion gas concentration limitations.
52.278 Oxides of nitrogen control.
52.279 Food processing facilities.
52.280 Fuel burning equipment.
52.281 Visibility protection.

Subpart G—Colorado

52.320 Identification of plan.
52.321 Classification of regions.
52.322 Extensions.
52.323 Approval status.
52.324 Legal authority.
52.325 [Reserved]
52.326 Area-wide nitrogen oxides (NO_X) exemptions.
52.327—52.328 [Reserved]
52.329 Rules and regulations.
52.330 Control strategy: Total suspended particulates.
52.331 Committal SIP for the Colorado Group II PM_{10} areas.
52.332 Moderate PM–10 nonattainment area plans.
52.333—52.342 [Reserved]
52.343 Significant deterioration of air quality.
52.344 Visibility protection.
52.345 Stack height regulations.
52.346 Air quality monitoring requirements.
52.347 Small business assistance program plan.

Subpart H—Connecticut

52.370 Identification of plan.
52.371 Classification of regions.
52.372 [Reserved]
52.373 Approval status.
52.374 Attainment dates for national standards.
52.375 Certification of no sources.
52.376 Control strategy: carbon monoxide.
52.377—52.379 [Reserved]
52.380 Rules and regulations.
52.381 Requirements for State implementation plan revisions relating to new motor vehicles.
52.382 Significant deterioration of air quality.
52.383 Stack height review.

Subpart I—Delaware

52.420 Identification of plan.
52.421 Classification of regions.
52.422 Approval status.
52.423 1990 Base Year Emission Inventory.
52.424—52.429 [Reserved]
52.430 Photochemical assessment monitoring stations (PAMS) program.
52.431 [Reserved]
52.432 Significant deterioration of air quality.
52.433 Requirements for State implementation plan revisions relating to new motor vehicles.
52.460 Small business stationary source technical and environmental compliance assistance program.

Subpart J—District of Columbia

52.470 Identification of plan.
52.471 Classification of regions.
52.472 Approval status.
52.473 [Reserved]
52.474 1990 Base Year Emission Inventory for Carbon Monoxide.
52.475—52.478 [Reserved]
52.479 Source surveillance.
52.480 Photochemical assessment monitoring stations (PAMS) program.
52.481—52.497 [Reserved]
52.498 Requirements for State implementation plan revisions relating to new motor vehicles.
52.499 Significant deterioration of air quality.
52.510 Small business assistance program.

Subpart K—Florida

52.520 Identification of plan.
52.521 Classification of regions.
52.522 Approval status.
52.523 [Reserved]
52.524 Compliance schedules.
52.525 General requirements.
52.526 Legal authority.
52.527 Control strategy: General.
52.528 Control strategy: Sulfur oxides and particulate matter.
52.529 [Reserved]
52.530 Significant deterioration of air quality.
52.532 Extensions.
52.533 Source surveillance.
52.534 Visibility protection.
52.535 Rules and regulations.

Subpart L—Georgia

52.570 Identification of plan.
52.571 Classification of regions.
52.572 Approval status.
52.573 Control strategy: General.
52.574—52.575 [Reserved]
52.576 Compliance schedules.
52.577 [Reserved]
52.578 Control strategy: Sulfur oxides and particulate matter.
52.579 Economic feasibility considerations.
52.580 [Reserved]
52.581 Significant deterioration of air quality.
52.582 Control strategy: Ozone.
52.583 Additional rules and regulations.

Subpart M—Hawaii

52.620 Identification of plan.
52.621 Classification of regions.
52.622 [Reserved]
52.623 Approval status.
52.624 General requirements.
52.625 Legal authority.
52.626 Compliance schedules.
52.627—52.631 [Reserved]
52.632 Significant deterioration of air quality.
52.633 Visibility protection.
52.634 Particulate matter (PM–10) Group III SIP.

Subpart N—Idaho

52.670 Identification of plan.
52.671 Classification of regions.
52.672 [Reserved]
52.673 Approval status.
52.674 Legal authority.
52.675 Control strategy: Sulfur oxides—Eastern Idaho Intrastate Air Quality Control Region.
52.676—52.678 [Reserved]
52.679 Contents of Idaho State implementation plan.
52.680 [Reserved]
52.681 Permits to construct and operating permits.
52.682 [Reserved]
52.683 Significant deterioration of air quality.
52.684—52.689 [Reserved]
52.690 Visibility protection.
52.691 Extensions.

Subpart O—Illinois

52.719 Identification of plan—conditional approval.
52.720 Identification of plan.
52.721 Classification of regions.
52.722 Approval status.
52.723 [Reserved]
52.724 Control strategy: Sulfur dioxide.
52.725 Control strategy: Particulates.
52.726 Control strategy: Ozone.
52.727 [Reserved]
52.728 Control strategy: Nitrogen dioxide. [Reserved]
52.729 [Reserved]
52.730 Compliance schedules.
52.731—52.735 [Reserved]
52.736 Review of new sources and modifications.
52.737 Operating permits.
52.738 Significant deterioration of air quality.
52.739 Permit fees.
52.740 Interstate pollution.
52.741 Control strategy: Ozone control measures for Cook, DuPage, Kane, Lake, McHenry and Will Counties.
52.742 Incorporation by reference.
52.743 Continuous monitoring.
52.744 Small business stationary source technical and environmental compliance assistance program.

Subpart P—Indiana

52.769 Identification of plan—conditional approval.

52.770 Identification of plan.
52.771 Classification of regions.
52.772 [Reserved]
52.773 Approval status.
52.774 [Reserved]
52.775 Legal authority.
52.776 Control strategy: Particulate matter.
52.777 Control strategy: Photochemical oxidants (hydrocarbons).
52.778 Compliance schedules.
52.779 [Reserved]
52.780 Review of new sources and modifications.
52.781 Rules and regulations.
52.782 Request for 18-month extension.
52.783 [Reserved]
52.784 Transportation and land use controls.
52.785 Control strategy: Carbon monoxide.
52.786 Inspection and maintenance program.
52.787 Gasoline transfer vapor control.
52.788 Operating permits.
52.789—52.792 [Reserved]
52.793 Significant deterioration of air quality.
52.794 Source surveillance.
52.795 Control strategy: Sulfur dioxide.
52.796 Industrial continuous emission monitoring.
52.797 Control strategy: Lead.
52.798 Small business stationary source technical and environmental compliance assistance program.

Subpart Q—Iowa

52.820 Identification of plan.
52.821 Classification of regions.
52.822 Approval status.
52.823 PM_{10} State Implementation Plan Development in Group II Areas
52.824 [Reserved]
52.825 Compliance schedules.
52.826—52.827 [Reserved]
52.828 Enforcement.
52.829—52.832 [Reserved]
52.833 Significant deterioration of air quality.

Subpart R—Kansas

52.870 Identification of plan.
52.871 Classification of regions.
52.872 Operating permits.
52.873 Approval status.
52.874 Legal authority.
52.875 [Reserved]
52.876 Compliance schedules.
52.877—52.880 [Reserved]
52.881 PM_{10} State implementation plan development in group II areas.
52.882—52.883 [Reserved]
52.884 Significant deterioration of air quality.

Subpart S—Kentucky

52.920 Identification of plan.
52.921 Classification of regions.
52.922 [Reserved]
52.923 Approval status.
52.924 Legal authority.
52.925 General requirements.
52.926 Attainment dates for national standards.
52.927 Compliance schedules.
52.928 Control strategy: Sulphur oxides.
52.929 [Reserved]
52.930 Control strategy: Ozone.
52.931 Significant deterioration of air quality.
52.932 Rules and regulations.
52.933 Control strategy: Sulfur oxides and particulate matter.
52.934 VOC rule deficiency correction.
52.935 PM_{10} State implementation plan development in group II areas.
52.936 Visibility protection.
52.937 Review of new sources and modifications.

Subpart T—Louisiana

52.970 Identification of plan.
52.971 Classification of regions.
52.972—52.974 [Reserved]
52.975 Redesignations and maintenance plans; ozone.
52.976 Review of new sources and modification.
52.977—52.985 [Reserved]
52.986 Significant deterioration of air quality.
52.987 Control of hydrocarbon emissions.
52.988 [Reserved]
52.990 Stack height regulations
52.991 Small business assistance program.
52.992 Area-wide nitrogen oxides exemptions.
52.993 Emissions inventories.
52.995 Enhanced ambient air quality monitoring.

Subpart U—Maine

52.1019 Identification of plan—conditional approval.
52.1020 Identification of plan.
52.1021 Classification of regions.
52.1022 Approval status.
52.1023 Control strategy: Ozone.
52.1024 Attainment dates for national standards.
52.1025 Control strategy: Particulate matter.
52.1026 Review of new sources and modifications.
52.1027 Rules and regulations.
52.1028 [Reserved]
52.1029 Significant deterioration of air quality.
52.1030 Control strategy: Sulfur oxides.
52.1031 EPA-approved Maine regulations.
52.1033 Visibility protection.
52.1034 Stack height review.

52.1035 Requirements for State implementation plan revisions relating to new motor vehicles.

Subpart V—Maryland

52.1070 Identification of plan.
52.1071 Classification of regions.
52.1072 [Reserved]
52.1073 Approval status.
52.1074 Legal authority.
52.1075 1990 base year emission inventory for carbon monoxide.
52.1076 [Reserved]
52.1077 Source surveillance.
52.1078 [Reserved]
52.1079 Requirements for State implementation plan revisions relating to new motor vehicles.
52.1080 Photochemical Assessment Monitoring Stations (PAMS) Program.
52.1081—52.1109[Reserved]
52.1110 Small business stationary source technical and environmental compliance assistance program.
52.1111—52.1112 [Reserved]
52.1113 General requirements.
52.1114—52.1115 [Reserved]
52.1116 Significant deterioration of air quality.
52.1117 Control strategy: Sulfur oxides.
52.1118 Approval of bubbles in nonattainment areas lacking approved demonstrations: State assurances.

Subpart W—Massachusetts

52.1119 Identification of plan—conditional approval.
52.1120 Identification of plan.
52.1121 Classification of regions.
52.1122 [Reserved]
52.1123 Approval status.
52.1124 Review of new sources and modifications.
52.1126 Control strategy: Sulfur oxides.
52.1127Attainment dates for national standards.
52.1128 Transportation and land use controls.
52.1129—52.1130 [Reserved]
52.1131 Control strategy: Particulate matter.
52.1132 Control strategy: Carbon Monoxide.
52.1133 [Reserved]
52.1134 Regulation limiting on-street parking by commuters.
52.1135 Regulation for parking freeze.
52.1136—52.1144 [Reserved]
52.1145 Regulation on organic solvent use.
52.1146 [Reserved]
52.1147 Federal compliance schedules.
52.1148—52.1159 [Reserved]
52.1160 Requirements for State implementation plan revisions relating to new motor vehicles.
52.1161 Incentives for reduction in single-passenger commuter vehicle use.
52.1162 Regulation for bicycle use.
52.1163 Additional control measures for East Boston.
52.1164 Localized high concentrations—carbon monoxide.
52.1165 Significant deterioration of air quality.
52.1166 [Reserved]
52.1167 EPA-approved Massachusetts state regulations.
52.1168 Certification of no sources.
52.1168a Part D—Disapproval of Rules and Regulations.
52.1169 Stack height review.

Subpart X—Michigan

52.1170 Identification of plan.
52.1171 Classification of regions.
52.1172 Approval status.
52.1173 Control strategy: Particulates.
52.1174 Control strategy: Ozone.
52.1175 Compliance schedules.
52.1176 Review of new sources and modifications. [Reserved]
52.1177—52.1179 [Reserved]
52.1180 Significant deterioration of air quality.
52.1181 Interstate pollution.
52.1182 State boards.
52.1183 Visibility protection.
52.1184 Small business stationary source technical and environmental compliance assistance program.

Subpart Y—Minnesota

52.1219 Identification of plan—conditional approval.
52.1220 Identification of plan.
52.1221 Classification of regions.
52.1222 EPA-approved Minnesota State regulations
52.1223 Approval status.
52.1224 General requirements.
52.1225 Review of new sources and modifications.
52.1226—52.1229 [Reserved]
52.1230 Control strategy and rules: Particulates.
52.1231—52.1232 [Reserved]
52.1233 Operating permits.
52.1234 Significant deterioration of air quality.
52.1235 [Reserved]
52.1236 Visibility protection.
52.1237 Control strategy: Carbon monoxide.

Subpart Z—Mississippi

52.1270 Identification of plan.
52.1271 Classification of regions.
52.1272 Approval status.
52.1273 [Reserved]
52.1275 Legal authority.
52.1276 [Reserved]

52.1277 General requirements.
52.1278 Control strategy: Sulfur oxides and particulate matter.
52.1279 [Reserved]
52.1280 Significant deterioration of air quality.

Subpart AA—Missouri

52.1320 Identification of plan.
52.1321 Classification of regions.
52.1322 [Reserved]
52.1323 Approval status.
52.1324 [Reserved]
52.1325 Legal authority.
52.1326—52.1334 [Reserved]
52.1335 Compliance schedules.
52.1336—52.1338 [Reserved]
52.1339 Visibility protection.

Subpart BB—Montana

52.1370 Identification of plan.
52.1371 Classification of regions.
52.1372 Approval status.
52.1373 Control strategy: Sulfur oxides.
52.1374 [Reserved]
52.1375 Attainment dates for national standards.
52.1376 Extensions.
52.1377 [Reserved]
52.1378 General requirements.
52.1379 Legal authority.
52.1380—52.1381 [Reserved]
52.1382 Prevention of significant deterioration of air quality.
52.1384 Emission control regulations.
52.1385 Source surveillance.
52.1386 [Reserved]
52.1387 Visibility protection.
52.1388 Stack height regulations.
52.1389 Small business stationary source technical and environmental compliance assistance program.
52.1390 Missoula variance provision.

Subpart CC—Nebraska

52.1420 Identification of plan.
52.1421 Classification of regions.
52.1422 Approval status.
52.1423 PM_{10} State implementation plan development in group II areas.
52.1424 Operating permits.
52.1425 Compliance schedules.
52.1426 [Reserved]
52.1427 Operating permits.
52.1428—52.1435 [Reserved]
52.1436 Significant deterioration of air quality.

Subpart DD—Nevada

52.1470 Identification of plan.
52.1471 Classification of regions.
52.1472 Approval status.
52.1473 General requirements.
52.1474 Part D conditional approval.
52.1475 Control strategy and regulations: Sulfur oxides.
52.1476 Control strategy: Particulate matter.
52.1477 Nevada air pollution emergency plan.
52.1478 [Reserved]
52.1479 Source surveillance.
52.1480—52.1481 [Reserved]
52.1482 Compliance schedules.
52.1483 Malfunction regulations.
52.1484 [Reserved]
52.1485 Significant deterioration of air quality.
52.1486 Control strategy: Hydrocarbons and ozone.
52.1487 Public hearings.
52.1488 Visibility protection.
52.1489 Particulate matter (PM–10) Group II SIP commitments.

Subpart EE—New Hampshire

52.1519 Identification of plan—conditional approval.
52.1520 Identification of plan.
52.1521 Classification of regions.
52.1522 Approval status.
52.1523 Attainment dates for national standards.
52.1524 Compliance schedules.
52.1525 EPA-approved New Hampshire state regulations.
52.1526 [Reserved]
52.1527 Rules and regulations.
52.1528 [Reserved]
52.1529 Significant deterioration of air quality.
52.1530 Requirements for State implementation plan revisions relating to new motor vehicles.
52.1531 Visibility protection.
52.1532 Stack height review.

Subpart FF—New Jersey

52.1570 Identification of plan.
52.1571 Classification of regions.
52.1572 [Reserved]
52.1573 Approval status.
52.1574 General requirements.
52.1575 Legal authority.
52.1576 Control strategy: Nitrogen dioxide.
52.1577 Compliance schedules.
52.1578 Review of new sources and modifications.
52.1579 Intergovernmental cooperation.
52.1580—52.1581 [Reserved]
52.1582 Control strategy and regulations: Ozone (volatile organic substances) and carbon monoxide.
52.1583 Requirements for State implementation plan revisions relating to new motor vehicles.
52.1584—52.1600 [Reserved]
52.1601 Control strategy and regulations: Sulfur oxides.

52.1602 [Reserved]
52.1603 Significant deterioration of air quality.
52.1604 Control strategy and regulations: Total suspended particulates.
52.1605 EPA-approved New Jersey regulations.
52.1606 Visibility protection.
52.1607 Small business technical and environmental compliance assistance program.

Subpart GG—New Mexico

52.1620 Identification of plan.
52.1621 Classification of regions.
52.1622 Approval status.
52.1623—52.1626 [Reserved]
52.1627 Control strategy and regulations: Carbon monoxide.
52.1628—52.1633 [Reserved]
52.1634 Significant deterioration of air quality.
52.1635 Rules and regulations.
52.1636 Visibility protection.
52.1637 Particulate Matter (PM_{10}) Group II SIP commitments.
52.1638 Bernalillo County particulate matter (PM_{10}) Group II SIP commitments.
52.1639 Prevention of air pollution emergency episodes.

Subpart HH—New York

52.1670 Identification of plans.
52.1671 Classification of regions.
52.1672 [Reserved]
52.1673 Approval status.
52.1674 Requirements for State implementation plan revisions relating to new motor vehicles.
52.1675 Control strategy and regulations: Sulfur oxides.
52.1676 Control strategy: Nitrogen dioxide.
52.1677 Compliance schedules.
52.1678 Control strategy and regulations: Particulate matter.
52.1679 EPA-approved New York State regulations.
52.1680 Control strategy: Monitoring and reporting.
52.1681 Control strategy: Lead.
52.1682 [Reserved]
52.1683 Control strategy: Ozone.
52.1684—52.1688 [Reserved]
52.1689 Significant deterioration of air quality.
52.1690 Small business technical and environmental compliance assistance program.

Subpart II—North Carolina

52.1770 Identification of plan.
52.1771 Classification of regions.
52.1772 Approval status.
52.1773—52.1774 [Reserved]
52.1775 Rules and regulations.
52.1776—52.1777 [Reserved]
52.1778 Significant deterioration of air quality.
52.1779 [Reserved]
52.1780 VOC rule deficiency correction.
52.1781 Control strategy: Sulfur oxides and particulate matter.

Subpart JJ—North Dakota

52.1820 Identification of plan.
52.1821 Classification of regions.
52.1822 Approval status.
52.1823 [Reserved]
52.1824 Review of new sources and modifications.
52.1825—52.1828 [Reserved]
52.1829 Prevention of significant deterioration of air quality.
52.1831 Visibility protection.
52.1832 Stack height regulations.
52.1833 Small business assistance program.
52.1834 Minor source permit to operate program.

Subpart KK—Ohio

52.1870 Identification of plan.
52.1871 Classification of regions.
52.1872 [Reserved]
52.1873 Approval status.
52.1874 [Reserved]
52.1875 Attainment dates for achieving the sulfur dioxide secondary standard.
52.1876 [Reserved]
52.1877 Control strategy: Photochemical oxidants (hydrocarbons).
52.1878 [Reserved]
52.1879 Review of new sources and modifications.
52.1880 Control strategy: Particulate matter.
52.1881 Control strategy: Sulfur oxides (sulfur dioxide).
52.1882 Compliance schedules.
52.1883 [Reserved]
52.1884 Significant deterioration of air quality.
52.1885 Control strategy: Ozone.
52.1886 [Reserved]
52.1887 Control strategy: Carbon monoxide.
52.1888 Operating permits.
52.1889 Small business stationary source technical and environmental compliance assistance program.
52.1919 Identification of plan-conditional approval.

Subpart LL—Oklahoma

52.1920 Identification of plan.
52.1921 Classification of regions.
52.1922 Approval status.
52.1923—52.1928 [Reserved]
52.1929 Significant deterioration of air quality.
52.1930 [Reserved]

52.1931 Petroleum storage tank controls.
52.1932 [Reserved]
52.1933 Visibility protection.
52.1934 Prevention of air pollution emergency episodes.
52.1935 Small business assistance program.

Subpart MM—Oregon

52.1970 Identification of plan.
52.1971 Classification of regions.
52.1972 Approval status.
52.1973—52.1976 [Reserved]
52.1977 Content of approved State submitted Implementation Plan.
52.1978—52.1981 [Reserved]
52.1982 Control strategy: Ozone.
52.1983—52.1984 [Reserved]
52.1985 Rules and regulations.
52.1986 [Reserved]
52.1987 Significant deterioration of air quality.
52.1988 Air contaminant discharge permits.

Subpart NN—Pennsylvania

52.2020 Identification of plan.
52.2021 Classification of regions.
52.2022 Extensions.
52.2023 Approval status.
52.2024 General requirements.
52.2025 Legal authority.
52.2026—52.2029 [Reserved]
52.2030 Source surveillance.
52.2031 [Reserved]
52.2032 Intergovernmental cooperation.
52.2033 Control strategy: Sulfur oxides.
52.2034 Attainment dates for national standards.
52.2035 Photochemical assessment monitoring stations (PAMS) program.
52.2036 1990 Baseyear Emission Inventory.
52.2037 Control strategy: Carbon monoxide and ozone (hydrocarbons).
52.2038—52.2053 [Reserved]
52.2054 Control of asphalt paving material.
52.2055 Review of new sources and modifications.
52.2056 [Reserved]
52.2057 Requirements for State implementation plan revisions relating to new motor vehicles.
52.2058 Prevention of significant air quality deterioration.
52.2059 Control strategy: Particulate matter.
52.2060 Small Business Assistance Program.

Subpart OO—Rhode Island

52.2070 Identification of plan.
52.2071 Classification of regions.
52.2072 Approval status.
52.2073 General requirements.
52.2074 Legal authority.
52.2075 Source surveillance.
52.2076 Attainment dates for national standards.
52.2078 Enforcement.
52.2079 Requirements for State implementation plan revisions relating to new motor vehicles.
52.2080 Revisions.
52.2081 EPA-approved Rhode Island state regulations.
52.2082 [Reserved]
52.2083 Significant deterioration of air quality.
52.2084 Rules and regulations.
52.2085 Stack height review.

Subpart PP—South Carolina

52.2120 Identification of plan.
52.2121 Classification of regions.
52.2122 Approval status.
52.2124 Legal authority.
52.2125 [Reserved]
52.2126 VOC rule deficiency correction.
52.2127—52.2129 [Reserved]
52.2130 Control strategy: Sulfur oxides and particulate matter.
52.2131 Significant deterioration of air quality.
52.2132 Visibility protection.

Subpart QQ—South Dakota

52.2170 Identification of plan.
52.2171 Classification of regions.
52.2172 Approval status.
52.2173 Legal authority.
52.2174—52.2177 [Reserved]
52.2178 Significant deterioration of air quality.
52.2179 Visibility protection.
52.2180 Stack height regulations.
52.2181 [Reserved]
52.2182 PM_{10} Committal SIP.
52.2183 Variance provision.
52.2184 Operating permits for minor sources.

Subpart RR—Tennessee

52.2219 Identification of plan—conditional approval.
52.2220 Identification of plan.
52.2221 Classification of regions.
52.2222 Approval status.
52.2223 Compliance schedules.
52.2224 Legal authority.
52.2225 VOC rule deficiency correction.
52.2226 Extensions.
52.2227 Prevention of air pollution emergency episodes.
52.2228 Review of new sources and modifications.
52.2229 Rules and regulations.
52.2230 Attainment dates for national standards.
52.2231 Control strategy: Sulfur oxides and particulate matter.
52.2233 Significant deterioration of air quality.
52.2234 Visibility protection.
52.2235 Control strategy: Ozone.

52.2236 Control strategy; lead.

Subpart SS—Texas

52.2270 Identification of plan.
52.2271 Classification of regions.
52.2272 [Reserved]
52.2273 Approval status.
52.2274 General requirements.
52.2275 Control strategy and regulations: Ozone.
52.2276 Control strategy and regulations: Particulate matter.
52.2277—52.2281 [Reserved]
52.2282 Public hearings.
52.2283—52.2284 [Reserved]
52.2285 Control of evaporative losses from the filling of gasoline storage vessels in the Houston and San Antonio areas.
52.2286 Control of evaporative losses from the filling of gasoline storage vessels in the Dallas-Fort Worth area.
52.2287—52.2300 [Reserved]
52.2301 Federal compliance date for automobile and light-duty truck coating. Texas Air Control Board Regulation V (31 TAC chapter 115), control of air pollution from volatile organic compound, rule 115.191(1)(8)(A).
52.2302 [Reserved]
52.2303 Significant deterioration of air quality.
52.2304 Visibility protection.
52.2305 [Reserved]
52.2306 Particulate Matter (PM_{10}) Group II SIP commitments.
52.2307 Small business assistance program.
52.2308 Area-wide nitrogen oxides (NO_X) exemptions.
52.2309 Emissions inventories.

Subpart TT—Utah

52.2320 Identification of plan.
52.2321 Classification of regions.
52.2322 [Reserved]
52.2323 Approval status.
52.2324—52.2330 [Reserved]
52.2331 Attainment dates for national standards.
52.2332 Control strategy: Ozone.
52.2333 Legal authority.
52.2334—52.2345 [Reserved]
52.2346 Significant deterioration of air quality.
52.2347 Stack height regulations.
52.2348 Small business assistance program.

Subpart UU—Vermont

52.2370 Identification of plan.
52.2371 Classification of regions.
52.2372 Approval status.
52.2373 Legal authority.
52.2374 General requirements.
52.2375 Attainment dates for national standards.
52.2377 Review of new sources and modifications.
52.2378 Certification of no facilities.
52.2379 [Reserved]
52.2380 Significant deterioration of air quality.
52.2381 EPA-approved Vermont state regulations.
52.2382 Rules and regulations.
52.2383 Visibility protection.
52.2384 Stack height review.
52.2385 Requirements for State implementation plan revisions relating to new motor vehicles.

Subpart VV—Virginia

52.2420 Identification of plan.
52.2421 Classification of regions.
52.2422 [Reserved]
52.2423 Approval status.
52.2424 [Reserved]
52.2425 1990 Base Year Emission Inventory for Carbon Monoxide.
52.2426 Photochemical assessment monitoring stations (PAMS) program.
52.2427 Source surveillance.
52.2428—52.2432 [Reserved]
52.2433 Intergovernmental cooperation.
52.2434—52.2435 [Reserved]
52.2436 Rules and regulations.
52.2437—52.2449 [Reserved]
52.2450 Conditional approval.
52.2451 Significant deterioration of air quality.
52.2452 Visibility protection.
52.2453 Requirements for State implementation plan revisions relating to new motor vehicles.
52.2460 Small business stationary source technical and environmental compliance assistance program.

Subpart WW—Washington

52.2470 Identification plan.
52.2471 Classification of regions.
52.2472 Extensions.
52.2473 Approval status.
52.2474 General requirements.
52.2475 [Reserved]
52.2476 Discretionary authority.
52.2477—52.2478 [Reserved]
52.2479 Contents of the federally approved, State submitted implementation plan.
52.2480—52.2494 [Reserved]
52.2495 Voluntary limits on potential to emit.
52.2496 [Reserved]
52.2497 Significant deterioration of air quality.
52.2498 Visibility protection.

Subpart XX—West Virginia

52.2520 Identification of plan.
52.2521 Classification of regions.
52.2522 Approval status.

52.2523 Attainment dates for national standards.
52.2524 Compliance schedules.
52.2525 Control strategy: Sulfur dioxide.
52.2526—52.2527 [Reserved]
52.2528 Significant deterioration of air quality.
52.2529—52.2530 [Reserved]
52.2531 1990 base year emission inventory.
52.2532 [Reserved]
52.2533 Visibility protection [Reserved.
52.2534 Stack height review.
52.2560 Small business technical and environmental compliance assistance program.

Subpart YY—Wisconsin

52.2569 Identification of plan—conditional approval.
52.2570 Identification of plan.
52.2571 Classification of regions.
52.2572 Approval status.
52.2573 General requirements.
52.2574 Legal authority.
52.2575 Control strategy: Sulfur dioxide.
52.2576 [Reserved]
52.2577 Attainment dates for national standards.
52.2578 Compliance schedules.
52.2579—52.2580 [Reserved]
52.2581 Significant deterioration of air quality.
52.2582—52.2583 [Reserved]
52.2584 Control strategy; Particulate matter.
52.2585 Control strategy: Ozone.
52.2586 Small business stationary source technical and environmental compliance assistance program.

Subpart ZZ—Wyoming

52.2620 Identification of plan.
52.2621 Classification of regions.
52.2622 Approval status.
52.2623—52.2624 [Reserved]
52.2625 Compliance schedules.
52.2626—52.2629 [Reserved]
52.2630 Prevention of significant deterioration of air quality.
52.2631 [Reserved]
52.2632 Visibility protection. [Reserved]
52.2633 Stack height regulations.

Subpart AAA—Guam

52.2670 Identification of plan.
52.2671 Classification of regions.
52.2672 Approval status.
52.2673—52.2675 [Reserved]
52.2676 Significant deterioration of air quality.
52.2677 [Reserved]
52.2678 Control strategy and regulations: Particulate matter.
52.2679 Control strategy and regulations: Sulfur dioxide.
52.2680—52.2681 [Reserved]
52.2682 Air quality surveillance.
52.2683 [Reserved]
52.2684 Source surveillance.
52.2685 [Reserved]
52.2686 Upset-breakdown reporting.

Subpart BBB—Puerto Rico

52.2720 Identification of plan.
52.2721 Classification of regions.
52.2722 Approval status.
52.2723—52.2724 [Reserved]
52.2725 General requirements.
52.2726 Legal authority.
52.2727—52.2728 [Reserved]
52.2729 Significant deterioration of air quality.
52.2730 [Reserved]
52.2731 Control strategy and regulations: Sulfur oxides.
52.2732 Small business technical and environmental compliance assistance program.

Subpart CCC—Virgin Islands

52.2770 Identification of plan.
52.2771 Classification of regions.
52.2772 Approval status.
52.2773 EPA-approved Virgin Islands regulations.
52.2774 [Reserved]
52.2775 Review of new sources and modifications.
52.2776—52.2778 [Reserved]
52.2779 Significant deterioration of air quality.
52.2780 Control strategy for sulfur oxides.
52.2781 Visibility protection.
52.2782 Small business technical and environmental compliance assistance program.

Subpart DDD—American Samoa

52.2820 Identification of plan.
52.2821 Classification of regions.
52.2822 Approval status.
52.2823 [Reserved]
52.2824 Review of new sources and modifications.
52.2825—52.2826 [Reserved]
52.2827 Significant deterioration of air quality.

Subpart EEE—Approval and Promulgation of Plans

52.2850 Approval and promulgation of implementation plans.

Subpart FFF—Commonwealth of the Northern Mariana Islands

52.2900 Negative declaration.
52.2920 Identification of plan.

APPENDICES A–C—[RESERVED]
APPENDIX D—DETERMINATION OF SULFUR DIOXIDE EMISSIONS FROM STATIONARY SOURCES BY CONTINUOUS MONITORS
APPENDIX E—PERFORMANCE SPECIFICATIONS AND SPECIFICATION TEST PROCEDURES FOR MONITORING SYSTEMS FOR EFFLUENT STREAM GAS VOLUMETRIC FLOW RATE

AUTHORITY: 42 U.S.C. 7401–7671q.

Subpart A—General Provisions

SOURCE: 37 FR 10846, May 31, 1972, unless otherwise noted.

§52.01 Definitions.

All terms used in this part but not defined herein shall have the meaning given them in the Clean Air Act and in parts 51 and 60 of this chapter.

(a) The term *stationary source* means any building, structure, facility, or installation which emits or may emit an air pollutant for which a national standard is in effect.

(b) The term *commenced* means that an owner or operator has undertaken a continuous program of construction or modification.

(c) The term *construction* means fabrication, erection, or installation.

(d) The phrases *modification* or *modified source* mean any physical change in, or change in the method of operation of, a stationary source which increases the emission rate of any pollutant for which a national standard has been promulgated under part 50 of this chapter or which results in the emission of any such pollutant not previously emitted, except that:

(1) Routine maintenance, repair, and replacement shall not be considered a physical change, and

(2) The following shall not be considered a change in the method of operation:

(i) An increase in the production rate, if such increase does not exceed the operating design capacity of the source;

(ii) An increase in the hours of operation;

(iii) Use of an alternative fuel or raw material, if prior to the effective date of a paragraph in this part which imposes conditions on or limits modifications, the source is designed to accommodate such alternative use.

(e) The term *startup* means the setting in operation of a source for any purpose.

(f) [Reserved]

(g) The term *heat input* means the total gross calorific value (where gross calorific value is measured by ASTM Method D2015–66, D240–64, or D1826–64) of all fuels burned.

(h) The term *total rated capacity* means the sum of the rated capacities of all fuel-burning equipment connected to a common stack. The rated capacity shall be the maximum guaranteed by the equipment manufacturer or the maximum normally achieved during use, whichever is greater.

[37 FR 19807, Sept. 22, 1972, as amended at 38 FR 12698, May 14, 1973; 39 FR 42514, Dec. 5, 1974; 43 FR 26410, June 19, 1978]

§52.02 Introduction.

(a) This part sets forth the Administrator's approval and disapproval of State plans and the Administrator's promulgation of such plans or portions thereof. Approval of a plan or any portion thereof is based upon a determination by the Administrator that such plan or portion meets the requirements of section 110 of the Act and the provisions of part 51 of this chapter.

(b) Any plan or portion thereof promulgated by the Administrator substitutes for a State plan or portion thereof disapproved by the Administrator or not submitted by a State, or supplements a State plan or portion thereof. The promulgated provisions, together with any portions of a State plan approved by the Administrator, constitute the applicable plan for purposes of the Act.

(c) Where nonregulatory provisions of a plan are disapproved, the disapproval is noted in this part and a detailed evaluation is provided to the State, but no substitute provisions are promulgated by the Administrator.

(d) All approved plans and plan revisions listed in subparts B through DDD of this part and on file at the Office of the Federal Register are approved for incorporation by reference by the Director of the Federal Register in accordance with 5 U.S.C. 552(a) and 1 CFR part 51. Notice of amendments to the plans will be published in the FEDERAL REGISTER. The plans and plan revisions

are available for inspection at the Office of the Federal Register, 800 North Capitol Street, N.W., suite 700, Washington, D.C. In addition the plans and plan revisions are available at the following locations:

(1) Office of Air and Radiation, Docket and Information Center (Air Docket), EPA, 401 M Street, S.W., Room M1500, Washington, D.C. 20460.

(2) The appropriate EPA Regional Office as listed below:

(i) Connecticut, Maine, Massachusetts, New Hampshire, Rhode Island, and Vermont. Environmental Protection Agency, Region 1, John F. Kennedy Federal Building, One Congress Street, Boston, MA 02203.

(ii) New York, New Jersey, Puerto Rico, and Virgin Islands. Environmental Protection Agency, Region 2, 290 Broadway, New York, NY 10007–1866.

(iii) Delaware, District of Columbia, Pennsylvania, Maryland, Virginia, and West Virginia. Environmental Protection Agency, Region 3, 841 Chestnut Building, Philadelphia, PA 19107.

(iv) Alabama, Florida, Georgia, Kentucky, Mississippi, North Carolina, South Carolina, and Tennessee Environmental Protection Agency, Region 4, 345 Courtland Street, N.E., Atlanta, GA 30365.

(v) Illinois, Indiana, Michigan, Minnesota, Ohio, and Wisconsin. Environmental Protection Agency, Region 5, 77 West Jackson Boulevard, Chicago, IL 60604–3507.

(vi) Arkansas, Louisiana, New Mexico, Oklahoma, and Texas. Environmental Protection Agency, Region 6, Fountain Place, 1445 Ross Avenue, Suite 1200, Dallas TX 75202–2733.

(vii) Iowa, Kansas, Missouri, and Nebraska. Environmental Protection Agency, Region 7, 726 Minnesota Avenue, Kansas City, KS 66101.

(viii) Colorado, Montana, North Dakota, South Dakota, Utah, and Wyoming. Environmental Protection Agency, Region 8, 999 18th Street, Suite 500, Denver, CO 80202–2466.

(ix) Arizona, California, Hawaii, Nevada, American Samoa, and Guam. Environmental Protection Agency, Region 9, 75 Hawthorne Street, San Francisco, CA 94105.

(x) Alaska, Idaho, Oregon, and Washington. Environmental Protection Agency, Region 10, 1200 6th Avenue Seattle, WA 98101.

(e) Each State's plan is dealt with in a separate subpart, which includes an introductory section identifying the plan by name and the date of its submittal, a section classifying regions, and a section setting forth dates for attainment of the national standards. Additional sections are included as necessary to specifically identify disapproved provisions, to set forth reasons for disapproval, and to set forth provisions of the plan promulgated by the Administrator. Except as otherwise specified, all supplemental information submitted to the Administrator with respect to any plan has been submitted by the Governor of the State.

(f) Revisions to applicable plans will be included in this part when approved or promulgated by the Administrator.

[37 FR 10846, May 31, 1972, as amended at 37 FR 15080, July 27, 1972; 47 FR 38886, Sept. 3, 1982; 61 FR 16060, Apr. 11, 1996]

§ 52.04 Classification of regions.

Each subpart sets forth the priority classification, by pollutant, for each region in the State. Each plan for each region was evaluated according to the requirements of part 51 of this chapter applicable to regions of that priority.

§ 52.05 Public availability of emission data.

Each subpart sets forth the Administrator's disapproval of plan procedures for making emission data available to the public after correlation with applicable emission limitations, and includes the promulgation of requirements that sources report emission data to the Administrator for correlation and public disclosure.

§ 52.06 Legal authority.

(a) The Administrator's determination of the absence or inadequacy of legal authority required to be included in the plan is set forth in each subpart. This includes the legal authority of local agencies and State governmental agencies other than an air pollution control agency if such other agencies are assigned responsibility for carrying out a plan or portion thereof.

(b) No legal authority as such is promulgated by the Administrator. Where

required regulatory provisions are not included in the plan by the State because of inadequate legal authority, substitute provisions are promulgated by the Administrator.

[37 FR 10846, May 31, 1972, as amended at 60 FR 33922, June 29, 1995]

§52.07 Control strategies.

(a) Each subpart specifies in what respects the control strategies are approved or disapproved. Where emission limitations with a future effective date are employed to carry out a control strategy, approval of the control strategy and the implementing regulations does not supersede the requirements of subpart N of this chapter relating to compliance schedules for individual sources or categories of sources. Compliance schedules for individual sources or categories of sources must require such sources to comply with applicable requirements of the plan as expeditiously as practicable, where the requirement is part of a control strategy designed to attain a primary standard, or within a reasonable time, where the requirement is part of a control strategy designed to attain a secondary standard. All sources must be required to comply with applicable requirements of the plan no later than the date specified in this part for attainment of the national standard which the requirement is intended to implement.

(b) A control strategy may be disapproved as inadequate because it is not sufficiently comprehensive, although all regulations provided to carry out the strategy may themselves be approved. In this case, regulations for carrying out necessary additional measures are promulgated in the subpart.

(c) Where a control strategy is adequate to attain and maintain a national standard but one or more of the regulations to carry it out is not adopted or not enforceable by the State, the control strategy is approved and the necessary regulations are promulgated by the Administrator.

(d) Where a control strategy is adequate to attain and maintain air quality better than that provided for by a national standard but one or more of the regulations to carry it out is not adopted or not enforceable by the State, the control strategy is approved and substitute regulations necessary to attain and maintain the national standard are promulgated.

[37 FR 10846, May 31, 1972, as amended at 37 FR 19807, Sept. 22, 1972; 51 FR 40676, Nov. 7, 1986]

§52.08 Rules and regulations.

Each subpart identifies the regulations, including emission limitations, which are disapproved by the Administrator, and includes the regulations which the Administrator promulgates.

§52.09 Compliance schedules.

(a) In each subpart, compliance schedules disapproved by the Administrator are identified, and compliance schedules promulgated by the Administrator are set forth.

(b) Individual source compliance schedules submitted with certain plans have not yet been evaluated, and are not approved or disapproved.

(c) The Administrator's approval or promulgation of any compliance schedule shall not affect the responsibility of the owner or operator to comply with any applicable emission limitation on and after the date for final compliance specified in the applicable schedule.

[37 FR 10846, May 31, 1972, as amended at 38 FR 30877, Nov. 8, 1973]

§52.10 Review of new sources and modifications.

In any plan where the review procedure for new sources and source modifications does not meet the requirements of subpart I of this chapter, provisions are promulgated which enable the Administrator to obtain the necessary information and to prevent construction or modification.

[37 FR 10846, May 31, 1972, as amended at 51 FR 40677, Nov. 7, 1986]

§52.11 Prevention of air pollution emergency episodes.

(a) Each subpart identifies portions of the air pollution emergency episode contingency plan which are disapproved, and sets forth the Administrator's promulgation of substitute provisions.

(b) No provisions are promulgated to replace any disapproved air quality monitoring or communications portions of a contingency plan, but detailed critiques of such portions are provided to the State.

(c) Where a State plan does not provide for public announcement regarding air pollution emergency episodes or where the State fails to give any such public announcement, the Administrator will issue a public announcement that an episode stage has been reached. When making such an announcement, the Administrator will be guided by the suggested episode criteria and emission control actions suggested in Appendix L of part 51 of this chapter or those in the approved plan.

[37 FR 10846, May 31, 1972, as amended at 37 FR 19807, Sept. 22, 1972]

§ 52.12 Source surveillance.

(a) Each subpart identifies the plan provisions for source surveillance which are disapproved, and sets forth the Administrator's promulgation of necessary provisions for requiring sources to maintain records, make reports, and submit information.

(b) No provisions are promulgated for any disapproved State or local agency procedures for testing, inspection, investigation, or detection, but detailed critiques of such portions are provided to the State.

(c) For purpose of Federal enforcement, the following test procedures shall be used:

(1) Sources subject to plan provisions which do not specify a test procedure and sources subject to provisions promulgated by the Administrator will be tested by means of the appropriate procedures and methods prescribed in part 60 of this chapter; unless otherwise specified in this part.

(2) Sources subject to approved provisions of a plan wherein a test procedure is specified will be tested by the specified procedure.

[37 FR 10846, May 31, 1972, as amended at 40 FR 26032, June 20, 1975]

§ 52.13 Air quality surveillance; resources; intergovernmental cooperation.

Disapproved portions of the plan related to the air quality surveillance system, resources, and intergovernmental cooperation are identified in each subpart, and detailed critiques of such portions are provided to the State. No provisions are promulgated by the Administrator.

§ 52.14 State ambient air quality standards.

Any ambient air quality standard submitted with a plan which is less stringent than a national standard is not considered part of the plan.

§ 52.15 Public availability of plans.

Each State shall make available for public inspection at least one copy of the plan in at least one city in each region to which such plan is applicable. All such copies shall be kept current.

§ 52.16 Submission to Administrator.

(a) All requests, reports, applications, submittals, and other communications to the Administrator pursuant to this part shall be submitted in duplicate and addressed to the appropriate Regional Office of the Environmental Protection Agency.

(b) The Regional Offices are as follows:

(1) Connecticut, Maine, Massachusetts, New Hampshire, Rhode Island, and Vermont. EPA Region 1, John F. Kennedy Federal Building, One Congress Street, Boston, MA 02203.

(2) New York, New Jersey, Puerto Rico, and Virgin Islands. EPA Region 2, 290 Broadway, New York, NY 10007–1866.

(3) Delaware, District of Columbia, Pennsylvania, Maryland, Virginia, and West Virginia. EPA Region 3, 841 Chestnut Building, Philadelphia, PA 19107.

(4) Alabama, Florida, Georgia, Kentucky, Mississippi, North Carolina, South Carolina, and Tennessee. EPA Region 4, 345 Courtland Street, N.E., Atlanta, GA 30365.

(5) Illinois, Indiana, Michigan, Minnesota, Ohio, and Wisconsin. EPA Region 5, 77 West Jackson Boulevard, Chicago, IL 60604–3507.

(6) Arkansas, Louisiana, New Mexico, Oklahoma, and Texas. EPA Region 6, Fountain Place, 1445 Ross Avenue, Suite 1200, Dallas, TX 75202–2733.

(7) Iowa, Kansas, Missouri, and Nebraska. EPA Region 7, 726 Minnesota Avenue, Kansas City, KS 66101.

(8) Colorado, Montana, North Dakota, South Dakota, Utah, and Wyoming. EPA Region 8, 999 18th Street, Suite 500, Denver, CO 80202–2466.

(9) Arizona, California, Hawaii, Nevada, American Samoa, and Guam. EPA, Region 9, 75 Hawthorne Street, San Francisco, CA 94105.

(10) Alaska, Idaho, Oregon, and Washington. EPA, Region 10, 1200 6th Avenue, Seattle, WA 98101.

[61 FR 16061, Apr. 11, 1996]

§52.17 Severability of provisions.

The provisions promulgated in this part and the various applications thereof are distinct and severable. If any provision of this part or the application thereof to any person or circumstances is held invalid, such invalidity shall not affect other provisions or application of such provision to other persons or circumstances which can be given effect without the invalid provision or application.

[37 FR 19808, Sept. 22, 1972]

§52.18 Abbreviations.

Abbreviations used in this part shall be those set forth in part 60 of this chapter.

[38 FR 12698, May 14, 1973]

§52.20 Attainment dates for national standards.

Each subpart contains a section which specifies the latest dates by which national standards are to be attained in each region in the State. An attainment date which only refers to a month and a year (such as July 1975) shall be construed to mean the last day of the month in question. However, the specification of attainment dates for national standards does not relieve any State from the provisions of subpart N of this chapter which require all sources and categories of sources to comply with applicable requirements of the plan—

(a) As expeditiously as practicable where the requirement is part of a control strategy designed to attain a primary standard, and

(b) Within a reasonable time where the requirement is part of a control strategy designed to attain a secondary standard.

[37 FR 19808, Sept. 22, 1972, as amended at 39 FR 34535, Sept. 26, 1974; 51 FR 40676, Nov. 7, 1986]

§52.21 Prevention of significant deterioration of air quality.

(a) *Plan disapproval.* The provisions of this section are applicable to any State implementation plan which has been disapproved with respect to prevention of significant deterioration of air quality in any portion of any State where the existing air quality is better than the national ambient air quality standards. Specific disapprovals are listed where applicable, in subparts B through DDD of this part. The provisions of this section have been incorporated by reference into the applicable implementation plans for various States, as provided in subparts B through DDD of this part. Where this section is so incorporated, the provisions shall also be applicable to all lands owned by the Federal Goverment and Indian Reservations located in such State. No disapproval with respect to a State's failure to prevent significant deterioration of air quality shall invalidate or otherwise affect the obligations of States, emission sources, or other persons with respect to all portions of plans approved or promulgated under this part.

(b) *Definitions.* For the purposes of this section:

(1)(i) *Major stationary source* means:

(*a*) Any of the following stationary sources of air pollutants which emits, or has the potential to emit, 100 tons per year or more of any pollutant subject to regulation under the Act: Fossil fuel-fired steam electric plants of more than 250 million British thermal units per hour heat input, coal cleaning plants (with thermal dryers), kraft pulp mills, portland cement plants, primary zinc smelters, iron and steel mill plants, primary aluminum ore reduction plants, primary copper smelters, municipal incinerators capable of charging more than 250 tons of refuse per day, hydrofluoric, sulfuric, and nitric acid plants, petroleum refineries, lime plants, phosphate rock processing

plants, coke oven batteries, sulfur recovery plants, carbon black plants (furnace process), primary lead smelters, fuel conversion plants, sintering plants, secondary metal production plants, chemical process plants, fossil fuel boilers (or combinations thereof) totaling more than 250 million British thermal units per hour heat input, petroleum storage and transfer units with a total storage capacity exceeding 300,000 barrels, taconite ore processing plants, glass fiber processing plants, and charcoal production plants;

(b) Notwithstanding the stationary source size specified in paragraph (b)(1)(i) of this section, any stationary source which emits, or has the potential to emit, 250 tons per year or more of any air pollutant subject to regulation under the Act; or

(c) Any physical change that would occur at a stationary source not otherwise qualifying under paragraph (b)(1) of this section, as a major stationary source, if the changes would constitute a major stationary source by itself.

(ii) A major stationary source that is major for volatile organic compounds shall be considered major for ozone.

(iii) The fugitive emissions of a stationary source shall not be included in determining for any of the purposes of this section whether it is a major stationary source, unless the source belongs to one of the following categories of stationary sources:

(*a*) Coal cleaning plants (with thermal dryers);

(*b*) Kraft pulp mills;

(*c*) Portland cement plants;

(*d*) Primary zinc smelters;

(*e*) Iron and steel mills;

(*f*) Primary aluminum ore reduction plants;

(*g*) Primary copper smelters;

(*h*) Municipal incinerators capable of charging more than 250 tons of refuse per day;

(*i*) Hydrofluoric, sulfuric, or nitric acid plants;

(*j*) Petroleum refineries;

(*k*) Lime plants;

(*l*) Phosphate rock processing plants;

(*m*) Coke oven batteries;

(*n*) Sulfur recovery plants;

(*o*) Carbon black plants (furnace process);

(*p*) Primary lead smelters;

(*q*) Fuel conversion plants;

(*r*) Sintering plants;

(*s*) Secondary metal production plants;

(*t*) Chemical process plants;

(*u*) Fossil-fuel boilers (or combination thereof) totaling more than 250 million British thermal units per hour heat input;

(*v*) Petroleum storage and transfer units with a total storage capacity exceeding 300,000 barrels;

(*w*) Taconite ore processing plants;

(*x*) Glass fiber processing plants;

(*y*) Charcoal production plants;

(*z*) Fossil fuel-fired steam electric plants of more that 250 million British thermal units per hour heat input, and

(*aa*) Any other stationary source category which, as of August 7, 1980, is being regulated under section 111 or 112 of the Act.

(2)(i) *Major modification* means any physical change in or change in the method of operation of a major stationary source that would result in a significant net emissions increase of any pollutant subject to regulation under the Act.

(ii) Any net emissions increase that is significant for volatile organic compounds shall be considered significant for ozone.

(iii) A physical change or change in the method of operation shall not include:

(a) Routine maintenance, repair and replacement;

(b) Use of an alternative fuel or raw material by reason of an order under sections 2 (a) and (b) of the Energy Supply and Environmental Coordination Act of 1974 (or any superseding legislation) or by reason of a natural gas curtailment plant pursuant to the Federal Power Act;

(c) Use of an alternative fuel by reason of an order or rule under section 125 of the Act;

(d) Use of an alternative fuel at a steam generating unit to the extent that the fuel is generated from municipal solid waste;

(e) Use of an alternative fuel or raw material by a stationary source which:

(1) The source was capable of accommodating before January 6, 1975, unless such change would be prohibited under

any federally enforceable permit condition which was established after January 6, 1975 pursuant to 40 CFR 52.21 or under regulations approved pursuant to 40 CFR subpart I or 40 CFR 51.166; or

(2) The source is approved to use under any permit issued under 40 CFR 52.21 or under regulations approved pursuant to 40 CFR 51.166;

(f) An increase in the hours of operation or in the production rate, unless such change would be prohibited under any federally enforceable permit condition which was established after January 6, 1975, pursuant to 40 CFR 52.21 or under regulations approved pursuant to 40 CFR subpart I or 40 CFR 51.166.

(g) Any change in ownership at a stationary source.

(*h*) The addition, replacement or use of a pollution control project at an existing electric utility steam generating unit, unless the Administrator determines that such addition, replacement, or use renders the unit less environmentally beneficial, or except:

(*1*) When the Administrator has reason to believe that the pollution control project would result in a significant net increase in representative actual annual emissions of any criteria pollutant over levels used for that source in the most recent air quality impact analysis in the area conducted for the purpose of title I, if any, and

(*2*) The Administrator determines that the increase will cause or contribute to a violation of any national ambient air quality standard or PSD increment, or visibility limitation.

(*i*) The installation, operation, cessation, or removal of a temporary clean coal technology demonstration project, provided that the project complies with:

(*1*) The State implementation plan for the State in which the project is located, and

(*2*) Other requirements necessary to attain and maintain the national ambient air quality standards during the project and after it is terminated.

(*j*) The installation or operation of a permanent clean coal technology demonstration project that constitutes repowering, provided that the project does not result in an increase in the potential to emit of any regulated pollutant emitted by the unit. This exemption shall apply on a pollutant-by-pollutant basis.

(*k*) The reactivation of a very clean coal-fired electric utility steam generating unit.

(3)(i) *Net emissions increase* means the amount by which the sum of the following exceeds zero:

(a) Any increase in actual emissions from a particular physical change or change in method of operation at a stationary source; and

(b) Any other increases and decreases in actual emissions at the source that are contemporaneous with the particular change and are otherwise creditable.

(ii) An increase or decrease in actual emissions is contemporaneous with the increase from the particular change only if it occurs between:

(*a*) The date five years before construction on the particular change commences; and

(*b*) The date that the increase from the particular change occurs.

(iii) An increase or decrease in actual emissions is creditable only if the Administrator has not relied on it in issuing a permit for the source under this section, which permit is in effect when the increase in actual emissions from the particular change occurs.

(iv) An increase or decrease in actual emissions of sulfur dioxide, particulate matter, or nitrogen oxide, which occurs before the applicable minor source baseline date is creditable only if it is required to be considered in calculating the amount of maximum allowable increases remaining available. With respect to particulate matter, only PM–10 emissions can be used to evaluate the net emissions increase for PM–10.

(v) An increase in actual emissions is creditable only to the extent that the new level of actual emissions exceeds the old level.

(vi) A decrease in actual emissions is creditable only to the extent that:

(*a*) The old level of actual emissions or the old level of allowable emissions, whichever is lower, exceeds the new level of actual emissions;

(*b*) It is federally enforceable at and after the time that actual construction on the particular change begins; and

(*c*) It has approximately the same qualitative significance for public

health and welfare as that attributed to the increase from the particular change.

(vii) [Reserved]

(viii) An increase that results from a physical change at a source occurs when the emissions unit on which construction occurred becomes operational and begins to emit a particular pollutant. Any replacement unit that requires shakedown becomes operational only after a reasonable shakedown period, not to exceed 180 days.

(4) *Potential to emit* means the maximum capacity of a stationary source to emit a pollutant under its physical and operational design. Any physical or operational limitation on the capacity of the source to emit a pollutant, including air pollution control equipment and restrictions on hours of operation or on the type or amount of material combusted, stored, or processed, shall be treated as part of its design if the limitation or the effect it would have on emissions is federally enforceable. Secondary emissions do not count in determining the potential to emit of a stationary source.

(5) *Stationary source* means any building, structure, facility, or installation which emits or may emit any air pollutant subject to regulation under the Act.

(6) *Building, structure, facility, or installation* means all of the pollutant-emitting activities which belong to the same industrial grouping, are located on one or more contiguous or adjacent properties, and are under the control of the same person (or persons under common control) except the activities of any vessel. Pollutant-emitting activities shall be considered as part of the same industrial grouping if they belong to the same ''Major Group'' (i.e., which have the same first two digit code) as described in the *Standard Industrial Classification Manual, 1972,* as amended by the 1977 Supplement (U. S. Government Printing Office stock numbers 4101–0066 and 003–005–00176–0, respectively).

(7) *Emissions unit* means any part of a stationary source which emits or would have the potential to emit any pollutant subject to regulation under the Act.

(8) *Construction* means any physical change or change in the method of operation (including fabrication, erection, installation, demolition, or modification of an emissions unit) which would result in a change in actual emissions.

(9) *Commence* as applied to construction of a major stationary source or major modification means that the owner or operator has all necessary preconstruction approvals or permits and either has:

(i) Begun, or caused to begin, a continuous program of actual on-site construction of the source, to be completed within a reasonable time; or

(ii) Entered into binding agreements or contractual obligations, which cannot be cancelled or modified without substantial loss to the owner or operator, to undertake a program of actual construction of the source to be completed within a reasonable time.

(10) *Necessary preconstruction approvals or permits* means those permits or approvals required under Federal air quality control laws and regulations and those air quality control laws and regulations which are part of the applicable State Implementation Plan.

(11) *Begin actual construction* means, in general, initiation of physical on-site construction activities on an emissions unit which are of a permanent nature. Such activities include, but are not limited to, installation of building supports and foundations, laying underground pipework and construction of permanent storage structures. With respect to a change in method of operations, this term refers to those on-site activites other than preparatory activities which mark the initiation of the change.

(12) *Best available control technology* means an emissions limitation (including a visible emission standard) based on the maximum degree of reduction for each pollutant subject to regulation under Act which would be emitted from any proposed major stationary source or major modification which the Administrator, on a case-by-case basis, taking into account energy, environmental, and economic impacts and other costs, determines is achievable for such source or modification

through application of production processes or available methods, systems, and techniques, including fuel cleaning or treatment or innovative fuel combustion techniques for control of such pollutant. In no event shall application of best available control technology result in emissions of any pollutant which would exceed the emissions allowed by any applicable standard under 40 CFR parts 60 and 61. If the Administrator determines that technological or economic limitations on the application of measurement methodology to a particular emissions unit would make the imposition of an emissions standard infeasible, a design, equipment, work practice, operational standard, or combination thereof, may be prescribed instead to satisfy the requirement for the application of best available control technology. Such standard shall, to the degree possible, set forth the emissions reduction achievable by implementation of such design, equipment, work practice or operation, and shall provide for compliance by means which achieve equivalent results.

(13)(i) ''Baseline concentration'' means that ambient concentration level which exists in the baseline area at the time of the applicable minor source baseline date. A baseline concentration is determined for each pollutant for which a baseline date is established and shall include:

(*a*) The actual emissions representative of sources in existence on the applicable minor source baseline date, except as provided in paragraph (b)(13)(ii) of this section;

(*b*) The allowable emissions of major stationary sources which commenced construction before the major source baseline date but were not in operation by the applicable minor source baseline date.

(ii) The following will not be included in the baseline concentration and will affect the applicable maximum allowable increase(s):

(*a*) Actual emissions from any major stationary source on which construction commenced after the major source baseline date; and

(*b*) Actual emissions increases and decreases at any stationary source occurring after the minor source baseline date.

(14)(i) *Major source baseline date* means:

(*a*) In the case of particulate matter and sulfur dioxide, January 6, 1975, and

(*b*) In the case of nitrogen dioxide, February 8, 1988.

(ii) ''Minor source baseline date'' means the earliest date after the trigger date on which a major stationary source or a major modification subject to 40 CFR 52.21 or to regulations approved pursuant to 40 CFR 51.166 submits a complete application under the relevant regulations. The trigger date is:

(*a*) In the case of particulate matter and sulfur dioxide, August 7, 1977, and

(*b*) In the case of nitrogen dioxide, February 8, 1988.

(iii) The baseline date is established for each pollutant for which increments or other equivalent measures have been established if:

(*a*) The area in which the proposed source or modification would construct is designated as attainment or unclassifiable under section 107(d)(i)(D) or (E) of the Act for the pollutant on the date of its complete application under 40 CFR 52.21; and

(*b*) In the case of a major stationary source, the pollutant would be emitted in significant amounts, or, in the case of a major modification, there would be a significant net emissions increase of the pollutant.

(iv) Any minor source baseline date established originally for the TSP increments shall remain in effect and shall apply for purposes of determining the amount of available PM–10 increments, except that the Administrator shall rescind a minor source baseline date where it can be shown, to the satisfaction of the Administrator, that the emissions increase from the major stationary source, or net emissions increase from the major modification, responsible for triggering that date did not result in a significant amount of PM–10 emissions.

(15)(i) *Baseline area* means any intrastate area (and every part thereof) designated as attainment or unclassifiable under section 107(d)(1) (D) or (E) of the Act in which the major source or major modification establishing the minor source baseline date would construct or would have an air quality impact equal

to or greater than 1 μg/m^3 (annual average) of the pollutant for which the minor source baseline date is established.

(ii) Area redesignations under section 107(d)(1) (D) or (E) of the Act cannot intersect or be smaller than the area of impact of any major stationary source or major modification which:

(*a*) Establishes a minor source baseline date; or

(*b*) Is subject to 40 CFR 52.21 and would be constructed in the same state as the state proposing the redesignation.

(iii) Any baseline area established originally for the TSP increments shall remain in effect and shall apply for purposes of determining the amount of available PM–10 increments, except that such baseline area shall not remain in effect if the Administrator rescinds the corresponding minor source baseline date in accordance with paragraph (b)(14)(iv) of this section.

(16) *Allowable emissions* means the emissions rate of a stationary source calculated using the maximum rated capacity of the source (unless the source is subject to federally enforceable limits which restrict the operating rate, or hours of operation, or both) and the most stringent of the following:

(i) The applicable standards as set forth in 40 CFR parts 60 and 61;

(ii) The applicable State Implementation Plan emissions limitation, including those with a future compliance date; or

(iii) The emissions rate specified as a federally enforceable permit condition, including those with a future compliance date.

(17) *Federally enforceable* means all limitations and conditions which are enforceable by the Administrator, including those requirements developed pursuant to 40 CFR parts 60 and 61, requirements within any applicable State implementation plan, any permit requirements established pursuant to 40 CFR 52.21 or under regulations approved pursuant to 40 CFR part 51, subpart I, including operating permits issued under an EPA-approved program that is incorporated into the State implementation plan and expressly requires adherence to any permit issued under such program.

(18) *Secondary emissions* means emissions which would occur as a result of the construction or operation of a major stationary source or major modification, but do not come from the major stationary source or major modification itself. Secondary emissions include emissions from any offsite support facility which would not be constructed or increase its emissions except as a result of the construction or operation of the major stationary source or major modification. Secondary emissions do not include any emissions which come directly from a mobile source, such as emissions from the tailpipe of a motor vehicle, from a train, or from a vessel.

(i) Emissions from ships or trains coming to or from the new or modified stationary source; and

(ii) Emissions from any offsite support facility which would not otherwise be constructed or increase its emissions as a result of the construction or operation of the major stationary source or major modification.

(19) *Innovative control technology* means any system of air pollution control that has not been adequately demonstrated in practice, but would have a substantial likelihood of achieving greater continuous emissions reduction than any control system in current practice or of achieving at least comparable reductions at lower cost in terms of energy, economics, or nonair quality environmental impacts.

(20) *Fugitive emissions* means those emissions which could not reasonably pass through a stack, chimney, vent, or other functionally equivalent opening.

(21)(i) *Actual emissions* means the actual rate of emissions of a pollutant from an emissions unit, as determined in accordance with paragraphs (b)(21)(ii) through (iv) of this section.

(ii) In general, actual emissions as of a particular date shall equal the average rate, in tons per year, at which the unit actually emitted the pollutant during a two-year period which precedes the particular date and which is representative of normal source operation. The Administrator shall allow the use of a different time period upon

a determination that it is more representative of normal source operation. Actual emissions shall be calculated using the unit's actual operating hours, production rates, and types of materials processed, stored, or combusted during the selected time period.

(iii) The Administrator may presume that source-specific allowable emissions for the unit are equivalent to the actual emissions of the unit.

(iv) For any emissions unit (other than an electric utility steam generating unit specified in paragraph (b)(21)(v) of this section) which has not begun normal operations on the particular date, actual emissions shall equal the potential to emit of the unit on that date.

(v) For an electric utility steam generating unit (other than a new unit or the replacement of an existing unit) actual emissions of the unit following the physical or operational change shall equal the representative actual annual emissions of the unit, provided the source owner or operator maintains and submits to the Administrator on an annual basis for a period of 5 years from the date the unit resumes regular operation, information demonstrating that the physical or operational change did not result in an emissions increase. A longer period, not to exceed 10 years, may be required by the Administrator if he determines such a period to be more representative of normal source post-change operations.

(22) *Complete* means, in reference to an application for a permit, that the application contains all of the information necessary for processing the application.

(23) (i) *Significant* means, in reference to a net emissions increase or the potential of a source to emit any of the following pollutants, a rate of emissions that would equal or exceed any of the following rates:

Pollutant and Emissions Rate

Carbon monoxide: 100 tons per year (tpy)
Nitrogen oxides: 40 tpy
Sulfur dioxide: 40 tpy
Particulate matter:
25 tpy of particulate matter emissions;
15 tpy of PM_{10} emissions
Ozone: 40 tpy of volatile organic compounds
Lead: 0.6 tpy
Asbestos: 0.007 tpy
Beryllium: 0.0004 tpy
Mercury: 0.1 tpy
Vinyl chloride: 1 tpy
Fluorides: 3 tpy
Sulfuric acid mist: 7 tpy
Hydrogen sulfide (H_2S): 10 tpy
Total reduced sulfur (including H_2S): 10 tpy
Reduced sulfur compounds (including H_2S): 10 tpy
Municipal waste combustor organics (measured as total tetra- through octa-chlorinated dibenzo-p-dioxins and dibenzofurans): 3.2×10^{-6} megagrams per year (3.5×10^{-6} tons per year). Municipal waste combustor metals (measured as particulate matter): 14 megagrams per year (15 tons per year)
Municipal waste combustor acid gases (measured as sulfur dioxide and hydrogen chloride): 36 megagrams per year (40 tons per year)
Municipal solid waste landfills emissions (measured as nonmethane organic compounds): 45 megagrams per year (50 tons per year)

(ii) *Significant* means, in reference to a net emissions increase or the potential of a source to emit a pollutant subject to regulation under the Act that paragraph (b)(23)(i) of this section, does not list, any emissions rate.

(iii) Notwithstanding paragraph (b)(23)(i) of this section, *significant* means any emissions rate or any net emissions increase associated with a major stationary source or major modification, which would construct within 10 kilometers of a Class I area, and have an impact on such area equal to or greater than 1 $\mu g/m^3$, (24-hour average).

(24) *Federal Land Manager* means, with respect to any lands in the United States, the Secretary of the department with authority over such lands.

(25) *High terrain* means any area having an elevation 900 feet or more above the base of the stack of a source.

(26) *Low terrain* means any area other than high terrain.

(27) *Indian Reservation* means any federally recognized reservation established by Treaty, Agreement, executive order, or act of Congress.

(28) *Indian Governing Body* means the governing body of any tribe, band, or group of Indians subject to the jurisdiction of the United States and recognized by the United States as possessing power of self government.

(29) *Adverse impact on visibility* means visibility impairment which interferes

with the management, protection, preservation or enjoyment of the visitor's visual experience of the Federal Class I area. This determination must be made on a case-by-case basis taking into account the geographic extent, intensity, duration, frequency and time of visibility impairment, and how these factors correlate with (1) times of visitor use of the Federal Class I area, and (2) the frequency and timing of natural conditions that reduce visibility.

(30) *Volatile organic compounds (VOC)* is as defined in § 51.100(s) of this chapter.

(31) *Electric utility steam generating unit* means any steam electric generating unit that is constructed for the purpose of supplying more than one-third of its potential electric output capacity and more than 25 MW electrical output to any utility power distribution system for sale. Any steam supplied to a steam distribution system for the purpose of providing steam to a steam-electric generator that would produce electrical energy for sale is also considered in determining the electrical energy output capacity of the affected facility.

(32) *Pollution control project* means any activity or project undertaken at an existing electric utility steam generating unit for purposes of reducing emissions from such unit. Such activities or projects are limited to:

(i) The installation of conventional or innovative pollution control technology, including but not limited to advanced flue gas desulfurization, sorbent injection for sulfur dioxide and nitrogen oxides controls and electrostatic precipitators;

(ii) An activity or project to accommodate switching to a fuel which is less polluting than the fuel in use prior to the activity or project, including, but not limited to natural gas or coal re-burning, or the co-firing of natural gas and other fuels for the purpose of controlling emissions;

(iii) A permanent clean coal technology demonstration project conducted under title II, section 101(d) of the Further Continuing Appropriations Act of 1985 (sec. 5903(d) of title 42 of the United States Code), or subsequent appropriations, up to a total amount of $2,500,000,000 for commercial demonstration of clean coal technology, or similar projects funded through appropriations for the Environmental Protection Agency; or

(iv) A permanent clean coal technology demonstration project that constitutes a repowering project.

(33) *Representative actual annual emissions* means the average rate, in tons per year, at which the source is projected to emit a pollutant for the two-year period after a physical change or change in the method of operation of a unit, (or a different consecutive two-year period within 10 years after that change, where the Administrator determines that such period is more representative of normal source operations), considering the effect any such change will have on increasing or decreasing the hourly emissions rate and on projected capacity utilization. In projecting future emissions the Administrator shall:

(i) Consider all relevant information, including but not limited to, historical operational data, the company's own representations, filings with the State or Federal regulatory authorities, and compliance plans under title IV of the Clean Air Act; and

(ii) Exclude, in calculating any increase in emissions that results from the particular physical change or change in the method of operation at an electric utility steam generating unit, that portion of the unit's emissions following the change that could have been accommodated during the representative baseline period and is attributable to an increase in projected capacity utilization at the unit that is unrelated to the particular change, including any increased utilization due to the rate of electricity demand growth for the utility system as a whole.

(34) *Clean coal technology* means any technology, including technologies applied at the precombustion, combustion, or post combustion stage, at a new or existing facility which will achieve significant reductions in air emissions of sulfur dioxide or oxides of nitrogen associated with the utilization of coal in the generation of electricity, or process steam which was not in widespread use as of November 15, 1990.

(35) *Clean coal technology demonstration project* means a project using funds appropriated under the heading ''Department of Energy-Clean Coal Technology'', up to a total amount of $2,500,000,000 for commercial demonstration of clean coal technology, or similar projects funded through appropriations for the Environmental Protection Agency. The Federal contribution for a qualifying project shall be at least 20 percent of the total cost of the demonstration project.

(36) *Temporary clean coal technology demonstration project* means a clean coal technology demonstration project that is operated for a period of 5 years or less, and which complies with the State implementation plans for the State in which the project is located and other requirements necessary to attain and maintain the national ambient air quality standards during the project and after it is terminated.

(37) (i) *Repowering* means replacement of an existing coal-fired boiler with one of the following clean coal technologies: atmospheric or pressurized fluidized bed combustion, integrated gasification combined cycle, magnetohydrodynamics, direct and indirect coal-fired turbines, integrated gasification fuel cells, or as determined by the Administrator, in consultation with the Secretary of Energy, a derivative of one or more of these technologies, and any other technology capable of controlling multiple combustion emissions simultaneously with improved boiler or generation efficiency and with significantly greater waste reduction relative to the performance of technology in widespread commercial use as of November 15, 1990.

(ii) Repowering shall also include any oil and/or gas-fired unit which has been awarded clean coal technology demonstration funding as of January 1, 1991, by the Department of Energy.

(iii) The Administrator shall give expedited consideration to permit applications for any source that satisfies the requirements of this subsection and is granted an extension under section 409 of the Clean Air Act.

(38) *Reactivation of a very clean coal-fired electric utility steam generating unit* means any physical change or change in the method of operation associated with the commencement of commercial operations by a coal-fired utility unit after a period of discontinued operation where the unit:

(i) Has not been in operation for the two-year period prior to the enactment of the Clean Air Act Amendments of 1990, and the emissions from such unit continue to be carried in the permitting authority's emissions inventory at the time of enactment;

(ii) Was equipped prior to shut-down with a continuous system of emissions control that achieves a removal efficiency for sulfur dioxide of no less than 85 percent and a removal efficiency for particulates of no less than 98 percent;

(iii) Is equipped with low-NO_x burners prior to the time of commencement of operations following reactivation; and

(iv) Is otherwise in compliance with the requirements of the Clean Air Act.

(c) *Ambient air increments.* In areas designated as Class I, II or III, increases in pollutant concentration over the baseline concentration shall be limited to the following:

Pollutant	Maximum allowable increase (micrograms per cubic meter)
Class I	
Particulate matter:	
PM–10, annual arithmetic mean	4
PM–10, 24-hr maximum	8
Sulfur dioxide:	
Annual arithmetic mean	2
24-hr maximum	5
3-hr maximum	25
Nitrogen dioxide:	
Annual arithmetic mean	2.5
Class II	
Particulate matter:	
PM–10, annual arithmetic mean	17
PM–10, 24-hr maximum	30
Sulfur dioxide:	
Annual arithmetic mean	20
24-hr maximum	91
3-hr maximum	512
Nitrogen dioxide:	
Annual arithmetic mean	25
Class III	
Particulate matter	
PM–10, annual arithmetic mean	34
PM–10, 24-hr maximum	60
Sulfur dioxide:	
Annual arithmetic mean	40
24-hr maximum	182

Pollutant	Maximum allowable increase (micrograms per cubic meter)
3-hr maximum	700
Nitrogen dioxide:	
Annual arithmetic mean	50

For any period other than an annual period, the applicable maximum allowable increase may be exceeded during one such period per year at any one location.

(d) *Ambient air ceilings.* No concentration of a pollutant shall exceed:

(1) The concentration permitted under the national secondary ambient air quality standard, or

(2) The concentration permitted under the national primary ambient air quality standard, whichever concentration is lowest for the pollutant for a period of exposure.

(e) *Restrictions on area classifications.* (1) All of the following areas which were in existence on August 7, 1977, shall be Class I areas and may not be redesignated:

(i) International parks,

(ii) National wilderness areas which exceed 5,000 acres in size,

(iii) National memorial parks which exceed 5,000 acres in size, and

(iv) National parks which exceed 6,000 acres in size.

(2) Areas which were redesignated as Class I under regulations promulgated before August 7, 1977, shall remain Class I, but may be redesignated as provided in this section.

(3) Any other area, unless otherwise specified in the legislation creating such an area, is initially designated Class II, but may be redesignated as provided in this section.

(4) The following areas may be redesignated only as Class I or II:

(i) An area which as of August 7, 1977, exceeded 10,000 acres in size and was a national monument, a national primitive area, a national preserve, a national recreational area, a national wild and scenic river, a national wildlife refuge, a national lakeshore or seashore; and

(ii) A national park or national wilderness area established after August 7, 1977, which exceeds 10,000 acres in size.

(f) [Reserved]

(g) *Redesignation.* (1) All areas (except as otherwise provided under paragraph (e) of this section) are designated Class II as of December 5, 1974. Redesignation (except as otherwise precluded by paragraph (e) of this section) may be proposed by the respective States or Indian Governing Bodies, as provided below, subject to approval by the Administrator as a revision to the applicable State implementation plan.

(2) The State may submit to the Administrator a proposal to redesignate areas of the State Class I or Class II provided that:

(i) At least one public hearing has been held in accordance with procedures established in § 51.102 of this chapter;

(ii) Other States, Indian Governing Bodies, and Federal Land Managers whose lands may be affected by the proposed redesignation were notified at least 30 days prior to the public hearing;

(iii) A discussion of the reasons for the proposed redesignation, including a satisfactory description and analysis of the health, environmental, economic, social and energy effects of the proposed redesignation, was prepared and made available for public inspection at least 30 days prior to the hearing and the notice announcing the hearing contained appropriate notification of the availability of such discussion;

(iv) Prior to the issuance of notice respecting the redesignation of an area that includes any Federal lands, the State has provided written notice to the appropriate Federal Land Manager and afforded adequate opportunity (not in excess of 60 days) to confer with the State respecting the redesignation and to submit written comments and recommendations. In redesignating any area with respect to which any Federal Land Manager had submitted written comments and recommendations, the State shall have published a list of any inconsistency between such redesignation and such comments and recommendations (together with the reasons for making such redesignation against the recommendation of the Federal Land Manager); and

(v) The State has proposed the redesignation after consultation with the elected leadership of local and other

substate general purpose governments in the area covered by the proposed redesignation.

(3) Any area other than an area to which paragraph (e) of this section refers may be redesignated as Class III if—

(i) The redesignation would meet the requirements of paragraph (g)(2) of this section;

(ii) The redesignation, except any established by an Indian Governing Body, has been specifically approved by the Governor of the State, after consultation with the appropriate committees of the legislature, if it is in session, or with the leadership of the legislature, if it is not in session (unless State law provides that the redesignation must be specifically approved by State legislation) and if general purpose units of local government representing a majority of the residents of the area to be redesignated enact legislation or pass resolutions concurring in the redesignation:

(iii) The redesignation would not cause, or contribute to, a concentration of any air pollutant which would exceed any maximum allowable increase permitted under the classification of any other area or any national ambient air quality standard; and

(iv) Any permit application for any major stationary source or major modification, subject to review under paragraph (l) of this section, which could receive a permit under this section only if the area in question were redesignated as Class III, and any material submitted as part of that application, were available insofar as was practicable for public inspection prior to any public hearing on redesignation of the area as Class III.

(4) Lands within the exterior boundaries of Indian Reservations may be redesignated only by the appropriate Indian Governing Body. The appropriate Indian Governing Body may submit to the Administrator a proposal to redesignate areas Class I, Class II, or Class III: *Provided*, That:

(i) The Indian Governing Body has followed procedures equivalent to those required of a State under paragraphs (g)(2), (g)(3)(iii), and (g)(3)(iv) of this section; and

(ii) Such redesignation is proposed after consultation with the State(s) in which the Indian Reservation is located and which border the Indian Reservation.

(5) The Administrator shall disapprove, within 90 days of submission, a proposed redesignation of any area only if he finds, after notice and opportunity for public hearing, that such redesignation does not meet the procedural requirements of this paragraph or is inconsistent with paragraph (e) of this section. If any such disapproval occurs, the classification of the area shall be that which was in effect prior to the redesignation which was disapproved.

(6) If the Administrator disapproves any proposed redesignation, the State or Indian Governing Body, as appropriate, may resubmit the proposal after correcting the deficiencies noted by the Administrator.

(h) *Stack heights.* (1) The degree of emission limitation required for control of any air pollutant under this section shall not be affected in any manner by—

(i) So much of the stack height of any source as exceeds good engineering practice, or

(ii) Any other dispersion technique.

(2) Paragraph (h)(1) of this section shall not apply with respect to stack heights in existence before December 31, 1970, or to dispersion techniques implemented before then.

(i) *Review of major stationary sources and major modifications—Source applicability and exemptions.* (1) No stationary source or modification to which the requirements of paragraphs (j) through (r) of this section apply shall begin actual construction without a permit which states that the stationary source or modification would meet those requirements. The Administrator has authority to issue any such permit.

(2) The requirements of paragraphs (j) through (r) of this section shall apply to any major stationary source and any major modification with respect to each pollutant subject to regulation under the Act that it would emit, except as this section otherwise provides.

(3) The requirements of paragraphs (j) through (r) of this section apply

only to any major stationary source or major modification that would be constructed in an area designated as attainment or unclassifiable under section 107(d)(1)(D) or (E) of the Act.

(4) The requirements of paragraphs (j) through (r) of this section shall not apply to a particular major stationary source or major modification, if;

(i) Construction commenced on the source or modification before August 7, 1977. The regulations at 40 CFR 52.21 as in effect before August 7, 1977, shall govern the review and permitting of any such source or modification; or

(ii) The source or modification was subject to the review requirements of 40 CFR 52.21(d)(1) as in effect before March 1, 1978, and the owner or operator:

(a) Obtained under 40 CFR 52.21 a final approval effective before March 1, 1978;

(b) Commenced construction before March 19, 1979; and

(c) Did not discontinue construction for a period of 18 months or more and completed construction within a reasonable time; or

(iii) The source or modification was subject to 40 CFR 52.21 as in effect before March 1, 1978, and the review of an application for approval for the stationary source or modification under 40 CFR 52.21 would have been completed by March 1, 1978, but for an extension of the public comment period pursuant to a request for such an extension. In such a case, the application shall continue to be processed, and granted or denied, under 40 CFR 52.21 as in effect prior to March 1, 1978; or

(iv) The source or modification was not subject to 40 CFR 52.21 as in effect before March 1, 1978, and the owner or operator:

(a) Obtained all final Federal, state and local preconstruction approvals or permits necessary under the applicable State Implementation Plan before March 1, 1978;

(b) Commenced construction before March 19, 1979; and

(c) Did not discontinue construction for a period of 18 months or more and completed construction within a reasonable time; or

(v) The source or modification was not subject to 40 CFR 52.21 as in effect on June 19, 1978 or under the partial stay of regulations published on February 5, 1980 (45 FR 7800), and the owner or operator:

(a) Obtained all final Federal, state and local preconstruction approvals or permits necessary under the applicable State Implementation Plan before August 7, 1980;

(b) Commenced construction within 18 months from August 7, 1980, or any earlier time required under the applicable State Implementation Plan; and

(c) Did not discontinuue construction for a period of 18 months or more and completed construction within a reasonable time; or

(vi) The source or modification would be a nonprofit health or nonprofit educational institution, or a major modification would occur at such an institution, and the governor of the state in which the source or modification would be located requests that it be exempt from those requirements; or

(vii) The source or modification would be a major stationary source or major modification only if fugitive emissions, to the extent quantifiable, are considered in calculating the potential to emit of the stationary source or modification and the source does not belong to any of the following categories:

(a) Coal cleaning plants (with thermal dryers);

(b) Kraft pulp mills;

(c) Portland cement plants;

(d) Primary zinc smelters;

(e) Iron and steel mills;

(f) Primary aluminum ore reduction plants;

(g) Primary copper smelters;

(h) Municipal incinerators capable of charging more than 250 tons of refuse per day;

(i) Hydrofluoric, sulfuric, or nitric acid plants;

(j) Petroleum refineries;

(k) Lime plants;

(l) Phosphate rock processing plants;

(m) Coke oven batteries;

(n) Sulfur recovery plants;

(o) Carbon black plants (furnace process);

(p) Primary lead smelters;

(q) Fuel conversion plants;

(r) Sintering plants;

(s) Secondary metal production plants;

(t) Chemical process plants;

(u) Fossil-fuel boilers (or combination thereof) totaling more than 250 million British thermal units per hour heat input;

(v) Petroleum storage and transfer units with a total storage capacity exceeding 300,000 barrels;

(w) Taconite ore processing plants;

(x) Glass fiber processing plants;

(y) Charcoal production plants;

(z) Fossil fuel-fired steam electric plants of more than 250 million British thermal units per hour heat input;

(aa) Any other stationary source category which, as of August 7, 1980, is being regulated under section 111 or 112 of the Act; or

(viii) The source is a portable stationary source which has previously received a permit under this section, and

(*a*) The owner or operator proposes to relocate the source and emissions of the source at the new location would be temporary; and

(*b*) The emissions from the source would not exceed its allowable emissions; and

(*c*) The emissions from the source would impact no Class I area and no area where an applicable increment is known to be violated; and

(*d*) Reasonable notice is given to the Administrator prior to the relocation identifying the proposed new location and the probable duration of operation at the new location. Such notice shall be given to the Administrator not less than 10 days in advance of the proposed relocation unless a different time duration is previously approved by the Administrator.

(ix) The source or modification was not subject to § 52.21, with respect to particulate matter, as in effect before July 31, 1987, and the owner or operator:

(a) Obtained all final Federal, State, and local preconstruction approvals or permits necessary under the applicable State implementation plan before July 31, 1987;

(b) Commenced construction within 18 months after July 31, 1987, or any earlier time required under the State implementation plan; and

(c) Did not discontinue construction for a period of 18 months or more and completed construction within a reasonable period of time.

(x) The source or modification was subject to 40 CFR 52.21, with respect to particulate matter, as in effect before July 31, 1987 and the owner or operator submitted an application for a permit under this section before that date, and the Administrator subsequently determines that the application as submitted was complete with respect to the particular matter requirements then in effect in the section. Instread, the requirments of paragraphs (j) through (r) of this section that were in effect before July 31, 1987 shall apply to such source or modifiction.

(5) The requirements of paragraphs (j) through (r) of this section shall not apply to a major stationary source or major modification with respect to a particular pollutant if the owner or operator demonstrates that, as to that pollutant, the source or modification is located in an area designated as nonattainment under section 107 of the Act.

(6) The requirements of paragraphs (k), (m) and (o) of this section shall not apply to a major stationary source or major modification with respect to a particular pollutant, if the allowable emissions of that pollutant from the source, or the net emissions increase of that pollutant from the modification:

(i) Would impact no Class I area and no area where an applicable increment is known to be violated, and

(ii) Would be temporary.

(7) The requirements of paragraphs (k), (m) and (o) of this section as they relate to any maximum allowable increase for a Class II area shall not apply to a major modification at a stationary source that was in existence on March 1, 1978, if the net increase in allowable emissions of each pollutant subject to regulation under the Act from the modification after the application of best available control technology would be less than 50 tons per year.

(8) The Administrator may exempt a stationary source or modification from the requirements of paragraph (m) of this section, with respect to monitoring for a particular pollutant if:

(i) The emissions increase of the pollutant from the new source or the net emissions increase of the pollutant from the modification would cause, in any area, air quality impacts less than the following amounts:

Carbon monoxide—575 μg/m³, 8-hour average;
Nitrogen dioxide—14 μg/m³, annual average;
Particulate matter—10 μg/m³ of PM–10, 24-hour average;
Sulfur dioxide—13 μg/m³, 24-hour average;
Ozone; [1]
Lead—0.1 μg/m³, 3-month average;
Mercury—0.25 μg/m³, 24-hour average;
Beryllium—0.001 μg/m³, 24-hour average;
Fluorides—0.25 μg/m³, 24-hour average;
Vinyl chloride—15 μg/m³, 24-hour average;
Total reduced sulfur—10 μg/m³, 1-hour average;
Hydrogen sulfide—0.2 μg/m³, 1-hour average;
Reduced sulfur compounds—10 μg/m³, 1-hour average; or

(ii) The concentrations of the pollutant in the area that the source or modification would affect are less than the concentrations listed in paragraph (i)(8)(i) of this section, or the pollutant is not listed in paragraph (i)(8)(i) of this section.

(9) The requirements for best available control technology in paragraph (j) of this section and the requirements for air quality analyses in paragraph (m)(1) of this section, shall not apply to a particular stationary source or modification that was subject to 40 CFR 52.21 as in effect on June 19, 1978, if the owner or operator of the source or modification submitted an application for a permit under those regulations before August 7, 1980, and the Administrator subsequently determines that the application as submitted before that date was complete. Instead, the requirements at 40 CFR 52.21(j) and (n) as in effect on June 19, 1978 apply to any such source or modification.

(10)(i) The requirements for air quality monitoring in paragraphs (m)(1) (ii) through (iv) of this section shall not apply to a particular source or modification that was subject to 40 CFR 52.21 as in effect on June 19, 1978, if the owner or operator of the source or modification submits an application for a permit under this section on or before June 8, 1981, and the Administrator subsequently determines that the application as submitted before that date was complete with respect to the requirements of this section other than those in paragraphs (m)(1) (ii) through (iv) of this section, and with respect to the requirements for such analyses at 40 CFR 52.21(m)(2) as in effect on June 19, 1978. Instead, the latter requirements shall apply to any such source or modification.

(ii) The requirements for air quality monitoring in paragraphs (m)(1) (ii) through (iv) of this section shall not apply to a particular source or modification that was not subject to 40 CFR 52.21 as in effect on June 19, 1978, if the owner or operator of the source or modification submits an application for a permit under this section on or before June 8, 1981, and the Administrator subsequently determines that the application as submitted before that date was complete, except with respect to the requirements in paragraphs (m)(1) (ii) through (iv).

(11)(i) At the discretion of the Administrator, the requirements for air quality monitoring of PM_{10} in paragraphs (m)(1) (i)—(iv) of this section may not apply to a particular source or modification when the owner or operator of the source or modification submits an application for a permit under this section on or before June 1, 1988 and the Administrator subsequently determines that the application as submitted before that date was complete, except with respect to the requirements for monitoring particulate matter in paragraphs (m)(1) (i)—(iv).

(ii) The requirements for air quiality monitoring pf PM_{10} in paragraphs (m)(1), (ii) and (iv) and (m)(3) of this section shall apply to a particular source or modification if the owner or operator of the source or modification submits an application for a permit under this section after June 1, 1988 and no later than December 1, 1988. The data shall have been gathered over at least the period from February 1, 1988 to the date the application becomes otherwise complete in accordance with

[1] No *de minimis* air quality level is provided for ozone. However, any net increase of 100 tons per year or more of volatile organic compounds subject to PSD would be required to perform an ambient impact analysis including the gathering of ambient air quality data.

the provisions set forth under paragraph (m)(1)(viii) of this section, except that if the Administrator determines that a complete and adequate analysis can be accomplished with monitoring data over a shorter period (not to be less than 4 months), the data that paragraph (m)(1)(iii) requires shall have been gathered over a shorter period.

(12) The requirements of paragraph (k)(2) of this section shall not apply to a stationary source or modification with respect to any maximum allowable increase for nitrogen oxides if the owner or operator of the source or modification submitted an application for a permit under this section before the provisions embodying the maximum allowable increase took effect as part of the applicable implementation plan and the Administrator subsequently determined that the application as submitted before that date was complete.

(13) The requirements in paragraph (k)(2) of this section shall not apply to a stationary source or modification with respect to any maximum allowable increase for PM–10 if (i) the owner or operator of the source or modification submitted an application for a permit under this section before the provisions embodying the maximum allowable increases for PM–10 took effect in an implementation plan to which this section applies, and (ii) the Administrator subsequently determined that the application as submitted before that date was otherwise complete. Instead, the requirements in paragraph (k)(2) shall apply with respect to the maximum allowable increases for TSP as in effect on the date the application was submitted.

(j) *Control technology review*. (1) A major stationary source or major modification shall meet each applicable emissions limitation under the State Implementation Plan and each applicable emissions standard and standard of performance under 40 CFR parts 60 and 61.

(2) A new major stationary source shall apply best available control technology for each pollutant subject to regulation under the Act that it would have the potential to emit in significant amounts.

(3) A major modification shall apply best available control technology for each pollutant subject to regulation under the Act for which it would result in a significant net emissions increase at the source. This requirement applies to each proposed emissions unit at which a net emissions increase in the pollutant would occur as a result of a physical change or change in the method of operation in the unit.

(4) For phased construction projects, the determination of best available control technology shall be reviewed and modified as appropriate at the latest reasonable time which occurs no later than 18 months prior to commencement of construction of each independent phase of the project. At such time, the owner or operator of the applicable stationary source may be required to demonstrate the adequacy of any previous determination of best available control technology for the source.

(k) *Source impact analysis.* The owner or operator of the proposed source or modification shall demonstrate that allowable emission increases from the proposed source or modification, in conjunction with all other applicable emissions increases or reductions (including secondary emissions), would not cause or contribute to air pollution in violation of:

(1) Any national ambient air quality standard in any air quality control region; or

(2) Any applicable maximum allowable increase over the baseline concentration in any area.

(l) *Air quality models.*

(1) All estimates of ambient concentrations required under this paragraph shall be based on the applicable air quality models, data bases, and other requirements specified in appendix W of part 51 of this chapter (''Guideline on Air Quality Models (Revised)'' (1986), supplement A (1987), supplement B (1993) and supplement C (1994)). The Guideline and its supplements (EPA Publication No. 450/2–78–027R) are also for sale from the U.S. Department of Commerce, National Technical Information Service, 5825 Port Royal Road, Springfield, VA 22161.

(2) Where an air quality impact model specified in appendix W of part

51 of this chapter (''Guideline on Air Quality Models (Revised)'' (1986), supplement A (1987), supplement B (1993) and supplement C (1994)) are inappropriate, the model may be modified or another model substituted. Such a modification or substitution of a model may be made on a case-by-case basis or, where appropriate, on a generic basis for a specific state program. Written approval of the Administrator must be obtained for any modification or substitution. In addition, use of a modified or substituted model must be subject to notice and opportunity for public comment under procedures developed in accordance with paragraph (q) of this section.

(m) *Air quality analysis*—(1) *Preapplication analysis.* (i) Any application for a permit under this section shall contain an analysis of ambient air quality in the area that the major stationary source or major modification would affect for each of the following pollutants:

(*a*) For the source, each pollutant that it would have the potential to omit in a significant amount;

(*b*) For the modification, each pollutant for which it would result in a significant net emissions increase.

(ii) With respect to any such pollutant for which no National Ambient Air Quality Standard exists, the analysis shall contain such air quality monitoring data as the Administrator determines is necessary to assess ambient air quality for that pollutant in any area that the emissions of that pollutant would affect.

(iii) With respect to any such pollutant (other than nonmethane hydrocarbons) for which such a standard does exist, the analysis shall contain continuous air quality monitoring data gathered for purposes of determining whether emissions of that pollutant would cause or contribute to a violation of the standard or any maximum allowable increase.

(iv) In general, the continuous air quality monitoring data that is required shall have been gathered over a period of at least one year and shall represent at least the year preceding receipt of the application, except that, if the Administrator determines that a complete and adequate analysis can be accomplished with monitoring data gathered over a period shorter than one year (but not to be less than four months), the data that is required shall have been gathered over at least that shorter period.

(v) For any application which becomes complete, except as to the requirements of paragraphs (m)(1) (iii) and (iv) of this section, between June 8, 1981, and February 9, 1982, the data that paragraph (m)(1)(iii) of this section, requires shall have been gathered over at least the period from February 9, 1981, to the date the application becomes otherwise complete, except that:

(*a*) If the source or modification would have been major for that pollutant under 40 CFR 52.21 as in effect on June 19, 1978, any monitoring data shall have been gathered over at least the period required by those regulations.

(*b*) If the Administrator determines that a complete and adequate analysis can be accomplished with monitoring data over a shorter period (not to be less than four months), the data that paragraph (m)(1)(iii) of this section, requires shall have been gathered over at least that shorter period.

(*c*) If the monitoring data would relate exclusively to ozone and would not have been required under 40 CFR 52.21 as in effect on June 19, 1978, the Administrator may waive the otherwise applicable requirements of this paragraph (v) to the extent that the applicant shows that the monitoring data would be unrepresentative of air quality over a full year.

(vi) The owner or operator of a proposed stationary source or modification of violatile organic compounds who satisfies all conditions of 40 CFR part 51 Appendix S, section IV may provide post-approval monitoring data for ozone in lieu of providing preconstruction data as requried under paragraph (m)(1) of this section.

(vii) For any application that becomes complete, except as to the requirements of paragraphs (m)(1) (iii) and (iv) pertaining to PM_{10}, after December 1, 1988 and no later than August 1, 1989 the data that paragraph (m)(1)(iii) requires shall have been gathered over at least the period from

August 1, 1988 to the date the application becomes otherwise complete, except that if the Administrator determines that a complete and adequate analysis can be accomplished with monitoring data over a shorter period (not to be less than 4 months), the data that paragraph (m)(1)(iii) requires shall have been gathered over that shorter period.

(viii) With respect to any requirements for air quality monitoring of PM_{10} under paragraphs (i)(11) (i) and (ii) of this section the owner or operator of the source or modification shall use a monitoring method approved by the Administratorand shall estimate the ambient concentrations of PM_{10} using the data collected by such approved monitoring method in accordance with estimating procedures approved by the Administrator.

(2) Post-construction monitoring. The owner or operator of a major stationary source or major modification shall, after construction of the stationary source or modification, conduct such ambient monitoring as the Administrator determines is necessary to determine the effect emissions from the stationary source or modification may have, or are having, on air quality in any area.

(3) Operations of monitoring stations. The owner or operator of a major stationary source or major modification shall meet the requirements of Appendix B to part 58 of this chapter during the operation of monitoring stations for purposes of satisfying paragraph (m) of this section.

(n) *Source information.* The owner or operator of a proposed source or modification shall submit all information necessary to perform any analysis or make any determination required under this section.

(1) With respect to a source or modification to which paragraphs (j), (l), (n) and (p) of this section apply, such information shall include:

(i) A description of the nature, location, design capacity, and typical operating schedule of the source or modification, including specifications and drawings showing its design and plant layout;

(ii) A detailed schedule for construction of the source or modification;

(iii) A detailed description as to what system of continuous emission reduction is planned for the source or modification, emission estimates, and any other information necessary to determine that best available control technology would be applied.

(2) Upon request of the Administrator, the owner or operator shall also provide information on:

(i) The air quality impact of the source or modification, including meteorological and topographical data necessary to estimate such impact; and

(ii) The air quality impacts, and the nature and extent of any or all general commercial, residential, industrial, and other growth which has occurred since August 7, 1977, in the area the source or modification would affect.

(o) *Additional impact analyses.* (1) The owner or operator shall provide an analysis of the impairment to visibility, soils and vegetation that would occur as a result of the source or modification and general commercial, residential, industrial and other growth associated with the source or modification. The owner or operator need not provide an analysis of the impact on vegetation having no significant commercial or recreational value.

(2) The owner or operator shall provide an analysis of the air quality impact projected for the area as a result of general commercial, residential, industrial and other growth associated with the source or modification.

(3) *Visibility monitoring.* The Administrator may require monitoring of visibility in any Federal class I area near the proposed new stationary source for major modification for such purposes and by such means as the Administrator deems necessary and appropriate.

(p) *Sources impacting Federal Class I areas—additional requirements*—(1) *Notice to Federal land managers.* The Administrator shall provide written notice of any permit application for a proposed major stationary source or major modification, the emissions from which may affect a Class I area, to the Federal land manager and the Federal official charged with direct responsibility for management of any lands within any such area. Such notification shall include a copy of all information

relevant to the permit application and shall be given within 30 days of receipt and at least 60 days prior to any public hearing on the application for a permit to construct. Such notification shall include an analysis of the proposed source's anticipated impacts on visibility in the Federal Class I area. The Administrator shall also provide the Federal land manager and such Federal officials with a copy of the preliminary determination required under paragraph (q) of this section, and shall make available to them any materials used in making that determination, promptly after the Administrator makes such determination. Finally, the Administrator shall also notify all affected Federal land managers within 30 days of receipt of any advance notification of any such permit application.

(2) *Federal Land Manager.* The Federal Land Manager and the Federal official charged with direct responsibility for management of such lands have an affirmative responsibility to protect the air quality related values (including visibility) of such lands and to consider, in consultation with the Administrator, whether a proposed source or modification will have an adverse impact on such values.

(3) *Visibility analysis.* The Administrator shall consider any analysis performed by the Federal land manager, provided within 30 days of the notification required by paragraph (p)(1) of this section, that shows that a proposed new major stationary source or major modification may have an adverse impact on visibility in any Federal Class I area. Where the Administrator finds that such an analysis does not demonstrate to the satisfaction of the Administrator that an adverse impact on visibility will result in the Federal Class I area, the Administrator must, in the notice of public hearing on the permit application, either explain his decision or give notice as to where the explanation can be obtained.

(4) *Denial—impact on air quality related values.* The Federal Land Manager of any such lands may demonstrate to the Administrator that the emissions from a proposed source or modification would have an adverse impact on the air quality-related values (including visibility) of those lands, notwithstanding that the change in air quality resulting from emissions from such source or modification would not cause or contribute to concentrations which would exceed the maximum allowable increases for a Class I area. If the Administrator concurs with such demonstration, then he shall not issue the permit.

(5) *Class I variances.* The owner or operator of a proposed source or modification may demonstrate to the Federal Land Manager that the emissions from such source or modification would have no adverse impact on the air quality related values of any such lands (including visibility), notwithstanding that the change in air quality resulting from emissions from such source or modification would cause or contribute to concentrations which would exceed the maximum allowable increases for a Class I area. If the Federal land manager concurs with such demonstration and he so certifies, the State may authorize the Administrator: *Provided,* That the applicable requirements of this section are otherwise met, to issue the permit with such emission limitations as may be necessary to assure that emissions of sulfur dioxide, particulate matter, and nitrogen oxides would not exceed the following maximum allowable increases over minor source baseline concentration for such pollutants:

Pollutant	Maximum allowable increase (micrograms per cubic meter)
Particulate matter:	
PM–10, annual arithmetic mean	17
PM–10, 24-hr maximum	30
Sulfur dioxide:	
Annual arithmetic mean	20
24-hr maximum	91
3-hr maximum	325
Nitrogen dioxide:	
Annual arithmetic mean	25

(6) *Sulfur dioxide variance by Governor with Federal Land Manager's concurrence.* The owner or operator of a proposed source or modification which cannot be approved under paragraph (q)(4) of this section may demonstrate to the Governor that the source cannot be constructed by reason of any maximum allowable increase for sulfur dioxide for a period of twenty-four hours

or less applicable to any Class I area and, in the case of Federal mandatory Class I areas, that a variance under this clause would not adversely affect the air quality related values of the area (including visibility). The Governor, after consideration of the Federal Land Manager's recommendation (if any) and subject to his concurrence, may, after notice and public hearing, grant a variance from such maximum allowable increase. If such variance is granted, the Administrator shall issue a permit to such source or modification pursuant to the requirements of paragraph (q)(7) of this section: *Provided,* That the applicable requirements of this section are otherwise met.

(7) *Variance by the Governor with the President's concurrence.* In any case where the Governor recommends a variance in which the Federal Land Manager does not concur, the recommendations of the Governor and the Federal Land Manager shall be transmitted to the President. The President may approve the Governor's recommendation if he finds that the variance is in the national interest. If the variance is approved, the Administrator shall issue a permit pursuant to the requirements of paragraph (q)(7) of this section: *Provided,* That the applicable requirements of this section are otherwise met.

(8) *Emission limitations for Presidential or gubernatorial variance.* In the case of a permit issued pursuant to paragraph (q) (5) or (6) of this section the source or modification shall comply with such emission limitations as may be necessary to assure that emissions of sulfur dioxide from the source or modification would not (during any day on which the otherwise applicable maximum allowable increases are exceeded) cause or contribute to concentrations which would exceed the following maximum allowable increases over the baseline concentration and to assure that such emissions would not cause or contribute to concentrations which exceed the otherwise applicable maximum allowable increases for periods of exposure of 24 hours or less for more than 18 days, not necessarily consecutive, during any annual period:

MAXIMUM ALLOWABLE INCREASE

[Micrograms per cubic meter]

Period of exposure	Terrain areas	
	Low	High
24-hr maximum	36	62
3-hr maximum	130	221

(q) *Public participation.* The Administrator shall follow the applicable procedures of 40 CFR part 124 in processing applications under this section. The Administrator shall follow the procedures at 40 CFR 52.21(r) as in effect on June 19, 1979, to the extent that the procedures of 40 CFR part 124 do not apply.

(r) *Source obligation.* (1) Any owner or operator who constructs or operates a source or modification not in accordance with the application submitted pursuant to this section or with the terms of any approval to construct, or any owner or operator of a source or modification subject to this section who commences construction after the effective date of these regulations without applying for and receiving approval hereunder, shall be subject to appropriate enforcement action.

(2) Approval to construct shall become invalid if construction is not commenced within 18 months after receipt of such approval, if construction is discontinued for a period of 18 months or more, or if construction is not completed within a reasonable time. The Administrator may extend the 18-month period upon a satisfactory showing that an extension is justified. This provision does not apply to the time period between construction of the approved phases of a phased construction project; each phase must commence construction within 18 months of the projected and approved commencement date.

(3) Approval to construct shall not relieve any owner or operator of the responsibility to comply fully with applicable provisions of the State implementation plan and any other requirements under local, State, or Federal law.

(4) At such time that a particular source or modification becomes a major stationary source or major modification solely by virtue of a relaxation in any enforceable limitation

which was established after August 7, 1980, on the capacity of the source or modification otherwise to emit a pollutant, such as a restriction on hours of operation, then the requirements or paragraphs (j) through (s) of this section shall apply to the source or modification as though construction had not yet commenced on the source or modification.

(s) *Environmental impact statements.* Whenever any proposed source or modification is subject to action by a Federal Agency which might necessitate preparation of an environmental impact statement pursuant to the National Environmental Policy Act (42 U.S.C. 4321), review by the Administrator conducted pursuant to this section shall be coordinated with the broad environmental reviews under that Act and under section 309 of the Clean Air Act to the maximum extent feasible and reasonable.

(t) *Disputed permits or redesignations.* If any State affected by the redesignation of an area by an Indian Governing Body, or any Indian Governing Body of a tribe affected by the redesignation of an area by a State, disagrees with such redesignation, or if a permit is proposed to be issued for any major stationary source or major modification proposed for construction in any State which the Governor of an affected State or Indian Governing Body of an affected tribe determines will cause or contribute to a cumulative change in air quality in excess of that allowed in this part within the affected State or Indian Reservation, the Governor or Indian Governing Body may request the Administrator to enter into negotiations with the parties involved to resolve such dispute. If requested by any State or Indian Governing Body involved, the Administrator shall make a recommendation to resolve the dispute and protect the air quality related values of the lands involved. If the parties involved do not reach agreement, the Administrator shall resolve the dispute and his determination, or the results of agreements reached through other means, shall become part of the applicable State implementation plan and shall be enforceable as part of such plan. In resolving such disputes relating to area redesignation, the Administrator shall consider the extent to which the lands involved are of sufficient size to allow effective air quality management or have air quality related values of such an area.

(u) *Delegation of authority.* (1) The Administrator shall have the authority to delegate his responsibility for conducting source review pursuant to this section, in accordance with paragraphs (v)(2) and (3) of this section.

(2) Where the Administrator delegates the responsibility for conducting source review under this section to any agency other than a Regional Office of the Environmental Protection Agency, the following provisions shall apply:

(i) Where the delegate agency is not an air pollution control agency, it shall consult with the appropriate State and local air pollution control agency prior to making any determination under this section. Similarly, where the delegate agency does not have continuing responsibility for managing land use, it shall consult with the appropriate State and local agency primarily responsible for managing land use prior to making any determination under this section.

(ii) The delegate agency shall send a copy of any public comment notice required under paragraph (r) of this section to the Administrator through the appropriate Regional Office.

(3) The Administrator's authority for reviewing a source or modification located on an Indian Reservation shall not be redelegated other than to a Regional Office of the Environmental Protection Agency, except where the State has assumed jurisdiction over such land under other laws. Where the State has assumed such jurisdiction, the Administrator may delegate his authority to the States in accordance with paragraph (v)(2) of this section.

(4) In the case of a source or modification which proposes to construct in a class III area, emissions from which would cause or contribute to air quality exceeding the maximum allowable increase applicable if the area were designated a class II area, and where no standard under section 111 of the act has been promulgated for such source

category, the Administrator must approve the determination of best available control technology as set forth in the permit.

(v) *Innovative control technology.* (1) An owner or operator of a proposed major stationary source or major modification may request the Administrator in writing no later than the close of the comment period under 40 CFR 124.10 to approve a system of innovative control technology.

(2) The Administrator shall, with the consent of the governor(s) of the affected state(s), determine that the source or modification may employ a system of innovative control technology, if: —

(i) The proposed control system would not cause or contribute to an unreasonable risk to public health, welfare, or safety in its operation or function;

(ii) The owner or operator agrees to achieve a level of continuous emissions reduction equivalent to that which would have been required under paragraph (j)(2) of this section, by a date specified by the Administrator. Such date shall not be later than 4 years from the time of startup or 7 years from permit issuance;

(iii) The source or modification would meet the requirements of paragraphs (j) and (k) of this section, based on the emissions rate that the stationary source employing the system of innovative control technology would be required to meet on the date specified by the Administrator;

(iv) The source or modification would not before the date specified by the Administrator:

(*a*) Cause or contribute to a violation of an applicable national ambient air quality standard; or

(*b*) Impact any area where an applicable increment is known to be violated; and

(v) All other applicable requirements including those for public participation have been met.

(vi) The provisions of paragraph (p) of this section (relating to Class I areas) have been satisfied with respect to all periods during the life of the source or modification.

(3) The Administrator shall withdraw any approval to employ a system of innovative control technology made under this section, if:

(i) The proposed system fails by the specified date to achieve the required continuous emissions reduction rate; or

(ii) The proposed system fails before the specified date so as to contribute to an unreasonable risk to public health, welfare, or safety; or

(iii) The Administrator decides at any time that the proposed system is unlikely to achieve the required level of control or to protect the public health, welfare, or safety.

(4) If a source or modification fails to meet the required level of continuous emission reduction within the specified time period or the approval is withdrawn in accordance with paragraph (v)(3) of this section, the Administrator may allow the source or modification up to an additional 3 years to meet the requirement for the application of best available control technology through use of a demonstrated system of control.

(w) *Permit rescission.* (1) Any permit issued under this section or a prior version of this section shall remain in effect, unless and until it expires under paragraph (s) of this section or is rescinded.

(2) Any owner or operator of a stationary source or modification who holds a permit for the source or modification which was issued under 40 CFR 52.21 as in effect on July 30, 1987, or any earlier version of this section, may request that the Administrator rescind the permit or a particular portion of the permit.

(3) The Administrator shall grant an application for rescission if the application shows that this section would not apply to the source or modification.

(4) If the Administrator rescinds a permit under this paragraph, the public shall be given adequate notice of the rescission. Publication of an announcement of rescission in a newspaper of general circulation in the affected region within 60 days of the rescission shall be considered adequate notice.

[43 FR 26403, June 19, 1978]

EDITORIAL NOTE: For FEDERAL REGISTER citations affecting § 52.21, see the List of CFR

Sections Affected in the Finding Aids section of this volume.

§ 52.23 Violation and enforcement.

Failure to comply with any provisions of this part, or with any approved regulatory provision of a State implementation plan, or with any permit condition or permit denial issued pursuant to approved or promulgated regulations for the review of new or modified stationary or indirect sources, or with any permit limitation or condition contained within an operating permit issued under an EPA-approved program that is incorporated into the State implementation plan, shall render the person or governmental entity so failing to comply in violation of a requirement of an applicable implementation plan and subject to enforcement action under section 113 of the Clean Air Act. With regard to compliance schedules, a person or Governmental entity will be considered to have failed to comply with the requirements of this part if it fails to timely submit any required compliance schedule, if the compliance schedule when submitted does not contain each of the elements it is required to contain, or if the person or Governmental entity fails to comply with such schedule.

[39 FR 33512, Sept. 18, 1974, as amended at 54 FR 27285, June 28, 1989]

§ 52.24 Statutory restriction on new sources.

(a) After June 30, 1979, no major stationary source shall be constructed or modified in any nonattainment area as designated in 40 CFR part 81, subpart C (''nonattainment area'') to which any State implementation plan applies, if the emissions from suy will cause or contribute to concentrations of any pollutant for which a national ambient air quality standard is exceeded in such area, unless, as of the time of application for a permit for such construction, such plan meets the requirements of Part D, Title I, of the Clean Air Act, as amended (42 U.S.C. 7501 *et seq.*) (''Part D''). This section shall not apply to any nonattainment area once EPA has fully approved the State implementation plan for the area as meeting the requirements of Part D.

(b) For any nonattainment area for which the SIP satisfies the requirements of Part D, permits to construct and operate new or modified major stationary sources may be issued only if the applicable SIP is being carried out for the nonattainment area in which the proposed source is to be constructed or modified in accordance with the requirements of Part D.

(c) The Emission Offset Interpretative Ruling, 40 CFR part 51, Appendix S (''Offset Ruling''), rather than paragraphs (a) and (b), governs permits to construct and operate applied for before the deadline for having a revised SIP in effect that satisfies Part D. This deadline is July 1, 1979, for areas designated as nonattainment on March 3, 1978 (42 FR 8962). The revised SIP, rather than paragraph (a) of this section, governs permits applied for during a period when the revised SIP is in compliance with Part D.

(d) The restrictions in paragraphs (a) and (b) apply only to major stationary sources of emissions that cause or contribute to concentrations of the pollutant for which the nonattainment area was designated as nonattainment, and for which the SIP does not meet the requirements of Part D or is not being carried out in accordance with the requirements of Part D.

(e) For any area designated as nonattainment for any national ambient air quality standard, the restrictions in paragraphs (a) and (b) of this section, shall apply to any major stationary source or major modification that would be major for the pollutant for which the area is designated nonattainment, if the stationary source or major modification would be constructed anywhere in the designated nonattainment areas. A major stationary source or major modification that is major for volatile organic compounds is also major for ozone.

(f) The following definitions shall apply under this section.

(1) *Stationary source* means any building, structure, facility, or installation which emits or may emit any air pollutant subject to regulation under the Act.

(2) *Building, structure, facility or installation* means all of the pollutant-emitting activities which belong to the

same industrial grouping, are located on one or more contiguous or adjacent properties, and are under the control of the same person (or persons under common control) except the activities of any vessel. Pollutant-emitting activities shall be considered as part of the same industrial grouping if they belong to the same ''Major Group'' (i.e., which have the same two-digit code) as described in the following document, *Standard Industrial Classification Manual, 1972,* as amended by the 1977 Supplement (U.S. Government Printing Office stock numbers 4101–0066 and 003–005–00176–0, respectively).

(3) *Potential to emit* means the maximum capacity of a stationary source to emit a pollutant under its physical and operational design. Any physical or operational limitation on the capacity of the source to emit a pollutant, including air pollution control equipment and restrictions on hours of operation or on amount of material combusted, stored, or processed, shall be treated as part of its design only if the limitation or the effect it would have on emissions is federally enforceable. Secondary emissions do not count in determining the potential to emit of a stationary source.

(4)(i) *Major stationary source* means:

(*a*) Any stationary source of air pollutants which emits, or has the potential to emit, 100 tons per year or more of any pollutant subject to regulation under the Act; or

(*b*) Any physical change that would occur at a stationary source not qualifying under paragraph (f)(5)(i)(*a)* of this section, as a major stationary source, if the change would constitute a major stationary source by itself.

(ii) A major stationary source that is major for volatile organic compounds shall be considered major for ozone.

(iii) The fugitive emissions of a stationary source shall not be included in determining for any of the purposes of this section whether it is a major stationary source, unless the source belongs to one of the following categories of stationary sources:

(*a*) Coal cleaning plants (with thermal dryers);

(*b*) Kraft pulp mills;

(*c*) Portland cement plants;

(*d*) Primary zinc smelters;

(*e*) Iron and steel mills;

(*f*) Primary aluminum ore reduction plants;

(*g*) Primary copper smelters;

(*h*) Municipal incinerators capable of charging more than 250 tons of refuse per day;

(*i*) Hydrofluoric, sulfuric, or nitric acid plants;

(*j*) Petroleum refineries;

(*k*) Lime plants;

(*l*) Phosphate rock processing plants;

(*m*) Coke oven batteries;

(*n*) Sulfur recovery plants;

(*o*) Carbon black plants (furnace process);

(*p*) Primary lead smelters;

(*q*) Fuel conversion plants;

(*r*) Sintering plants;

(*s*) Secondary metal production plants;

(*t*) Chemical process plants;

(*u*) Fossil-fuel boilers (or combination thereof) totaling more than 250 million British thermal units per hour heat input;

(*v*) Petroleum storage and transfer units with a total storage capacity exceeding 300,000 barrels;

(*w*) Taconite ore processing plants;

(*x*) Glass fiber processing plants;

(*y*) Charcoal production plants;

(*z*) Fossil fuel-fired steam electric plants of more than 250 million British thermal units per hour heat input;

(*aa*) Any other stationary source category which, as of August 7, 1980, is being regulated under section 111 or 112 of the Act.

(5)(i) *Major modification* means any physical change in or change in the method of operation of a major stationary source that would result in a significant net emissions increase of any pollutant subject to regulation under the Act.

(ii) Any net emissions increase that is considered significant for volatile organic compounds shall be considered significant for ozone.

(iii) A physical change or change in the method of operation shall not include:

(*a*) Routine maintenance, repair, and replacement;

(*b*) Use of an alternative fuel or raw material by reason of an order under sections 2 (a) and (b) of the Energy

Supply and Environmental Coordination Act of 1974 (or any superseding legislation) or by reason of a natural gas curtailment plan pursuant to the Federal Power Act;

(*c*) Use of an alternative fuel by reason of an order or rule under section 125 of the Act;

(*d*) Use of an alternative fuel at a steam generating unit to the extent that the fuel is generated from municipal solid waste;

(*e*) Use of an alternative fuel or raw material by a stationary source which:

(*1*) The source was capable of accommodating before July 1, 1979, unless such change would be prohibited under any federally enforceable permit condition which was established after July 1, 1979 pursuant to 40 CFR 52.21 or under regulations approved pursuant to 40 CFR subpart I or 40 CFR 51.166; or

(*2*) The source is approved to use under any permit issued under regulations approved pursuant to 40 CFR subpart I;

(*f*) An increase in the hours of operation or in the production rate, unless such change is prohibited under any federally enforceable permit condition which was established after July 1, 1979 pursuant to 40 CFR 52.21 or under regulations approved pursuant to 40 CFR subpart I or 40 CFR 51.166.

(*g*) Any change in ownership at a stationary source.

(*h*) The addition, replacement or use of a pollution control project at an existing electric utility steam generating unit, unless the Administrator determines that such addition, replacement, or use renders the unit less environmentally beneficial, or except:

(*1*) When the Administrator has reason to believe that the pollution control project would reslt in a significant net increase in representative actual annual emissions of any criteria pollutant over levels used for that source in the most recent air quality impact analysis in the area conducted for the purpose of title I, if any, and

(*2*) The Administrator determines that the increase will cause or contribute to a violation of any national ambient air quality standard or PSD increment, or visibility limitation.

(*i*) The installation, operation, cessation, or removal of a temporary clean coal technology demonstration project, provided that the project complies with:

(*1*) The State implementation plan for the State in which the project is located, and

(*2*) Other requirements necessary to attain and maintain the national ambient air quality standards during the project and after it is terminated.

(6)(i) *Net emissions increase* means the amount by which the sum of the following exceeds zero:

(*a*) Any increase in actual emissions from a particular physical change or change in the method of operation at a stationary source; and

(*b*) Any other increases and decreases in actual emissions at the source that are contemporaneous with the particular change and are otherwise creditable.

(ii) An increase or decrease in actual emissions is contemporaneous with the increase from the particular change only if it occurs between:

(*a*) The date five years before construction on the particular change commences and

(*b*) The date that the increase from the particular change occurs.

(iii) An increase or decrease in actual emissions is creditable only if the Administrator has not relied on it in issuing a permit for the source under regulations approved pursuant to 40 CFR subpart I which permit is in effect when the increase in actual emissions from the particular change occurs.

(iv) An increase in actual emissions is creditabletime. only to the extent that the new level of actual emissions exceeds the old level.

(v) A decrease in actual emissions is creditable only to the extent that:

(*a*) The old level of actual emissions or the old level of allowable emissions, whichever is lower, exceeds the new level of actual emissions;

(*b*) It is federally enforceable at and after the time that construction on the particular change begins; and

(*c*) The Administrator or reviewing authority has not relied on it in issuing any permit under regulations approved pursuant to 40 CFR subpart I or the State has not relied on it in demonstrating attainment or reasonable further progress.

(*d*) It has approximately the same qualitative significance for public health and welfare as that attributed to the increase from the particular change.

(vi) An increase that results from a physical change at a source occurs when the emissions unit on which construction occurred becomes operational and begins to emit a particular pollutant. Any replacement unit that requires shakedown becomes operational only after a reasonable shakedown period, not to exceed 180 days.

(7) *Emissions unit* means any part of a stationary source which emits or would have the potential to emit any pollutant subject to regulation under the Act.

(8) *Secondary emissions* means emissions which would occur as a result of the construction or operation of a major stationary source or major modification, but do not come from the major stationary source or major modification itself. For the purpose of this section, secondary emissions must be specific, well defined, quantifiable, and impact the same general area as the stationary source or modification which causes the secondary emissions. Secondary emissions include emissions from any offsite support facility which would otherwise not be constructed or increase its emissions except as a result of the construction or operation of the major stationary source or major modification. Secondary emissions do not include any emissions which come directly from a mobile source, such as emissions from the tailpipe of a motor vehicle, from a train, or from a vessel.

(9) *Fugitive emissions* means those emissions which could not reasonably pass through a stack, chimney, vent, or other functionally equivalent opening.

(10) *Significant* means, in reference to a net emissions increase or the potential of a source to emit any of the following pollutants, a rate of emissions that would equal or exceed any of the following rates:

Pollutant and Emissions Rate

Carbon monoxide: 100 tons per year (tpy)
Nitrogen oxides: 40 tpy
Sulfur dioxide: 40 tpy
Ozone: 40 tpy of volatile organic compounds
Lead: 0.6 tpy

(11) *Allowable emissions* means the emissions rate of a stationary source calculated using the maximum rated capacity of the source (unless the source is subject to federally enforceable limits which restrict the operating rate, or hours of operation, or both) and the most stringent of the following:

(i) The applicable standards set forth in 40 CFR parts 60 and 61;

(ii) Any applicable State Implementation Plan emissions limitation, including those with a future compliance date; or

(iii) The emissions rate specified as a federally enforceable permit condition, including those with a future compliance date.

(12) *Federally enforceable* means all limitations and conditions which are enforceable by the Administrator, including those requirements developed pursuant to 40 CFR parts 60 and 61, requirements within any applicable State implementation plan, any permit requirements established pursuant to 40 CFR 52.21 or under regulations approved pursuant to 40 CFR part 51, subpart I, including operating permits issued under an EPA-approved program that is incorporated into the State implementation plan and expressly requires adherence to any permit issued under such program.

(13)(i) *Actual emissions* means the actual rate of emissions of a pollutant from an emissions unit, as determined in accordance with paragraphs (f) (ii) through (iv) of this section.

(ii) In general, actual emissions as of a particular date shall equal the average rate, in tons per year, at which the unit actually emitted the pollutant during a two-year period which precedes the particular date and which is representative of normal source operation. The Administrator shall allow the use of a different time period upon a determination that it is more representative of normal source operation. Actual emissions shall be calculated using the unit's actual operating hours, production rates, and types of materials processed, stored, or combusted during the selected time period.

(iii) The Administrator may presume that source-specific allowable emissions for the unit are equivalent to the actual emissions of the unit.

(iv) For any emissions unit (other than an electric utility steam generating unit specified in paragraph (f)(13)(v) of this section) which has not begun normal operations on the particular date, actual emissions shall equal the potential to emit of the unit on that date.

(v) For an electric utility steam generating unit (other than a new unit or the replacement of an existing unit) actual emissions of the unit following the physical or operational change shall equal the representative actual annual emissions of the unit, provided the source owner or operator maintains and submits to the Administrator, on an annual basis for a period of 5 years from the date the unit resumes regular operation, information demonstrating that the physical or operational change did not result in an emissions increase. A longer period, not to exceed 10 years, may be required by the Administrator if he determines such a period to be more representative of normal source post-change operations.

(14) *Construction* means any physical change or change in the method of operation (including fabrication, erection, installation, demolition, or modification) of an emissions unit which would result in a change in actual emissions.

(15) *Commence* as applied to construction of a major stationary source or major modification means that the owner or operator has all necessary preconstruction approvals or permits and either has:

(i) Begun, or caused to begin, a continuous program of actual on-site construction of the source, to be completed within a reasonable time; or

(ii) Entered into binding agreements or contractual obligations, which cannot be cancelled or modified without substantial loss to the owner or operator, to undertake a program of actual construction of the source to be completed within a reasonable time.

(16) *Necessary preconstruction approvals or permits* means those permits or approvals required under federal air quality control laws and regulations and those air quality control laws and regulations which are part of the applicable State Implementation Plan.

(17) *Begin actual construction* means, in general, initiation of physical on-site construction activities on an emissions unit which are of a permanent nature. Such activities include, but are not limited to, installation of building supports and foundations, laying of underground pipework, and construction of permanent storage structures. With respect to a change in method of operations, this term refers to those on-site activities other than preparatory activities which mark the initiation of change.

(18) *Volatile organic compounds (VOC)* is as defined in § 51.100(s) of this chapter.

(19) *Electric utility steam generating unit* means any steam electric generating unit that is constructed for the purpose of supplying more than one-third of its potential electric output capacity and more than 25 MW electrical output to any utility power distribution system for sale. Any steam supplied to a steam distribution system for the purpose of providing steam to a steam-electric generator that would produce electrical energy for sale is also considered in determining the electrical energy output capacity of the affected facility.

(20) *Representative actual annual emissions* means the average rate, in tons per year, at which the source is projected to emit a pollutant for the two-year period after a physical change or change in the method of operation of a unit, (or a different consecutive two-year period within 10 years after that change, where the Administrator determines that such period is more representative of normal source operations), considering the effect any such change will have on increasing or decreasing the hourly emissions rate and on projected capacity utilization. In projecting future emissions the Administrator shall:

(i) Consider-all relevant information, including but not limited to, historical operational data, the company's own representations, filings with the State or Federal regulatory authorities, and compliance plans under title IV of the Clean Air Act; and

(ii) Exclude, in calculating any increase in emissions that results from the particular physical change or change in the method of operation at an electric utility steam generating unit, that portion of the unit's emissions following the change that could have been accommodated during the representative baseline period and is attributable to an increase in projected capacity utilization at the unit that is unrelated to the particular change, including any increased utilization due to the rate of electricity demand growth for the utility system as a whole.

(21) *Temporary clean coal technology demonstration project* means a clean coal technology demonstration project that is operated for a period of 5 years or less, and which complies with the State implementation plans for the State in which the project is located and other requirements necessary to attain and maintain the national ambient air quality standards during the project and after it is terminated.

(22) *Clean coal technology* means any technology, including technologies applied at the precombustion, combustion, or post combustion stage, at a new or existing facility which will achieve significant reductions in air emissions of sulfur dioxide or oxides of nitrogen associated with the utilization of coal in the generation of electricity, or process steam which was not in widespread use as of November 15, 1990.

(23) *Clean coal technology demonstration project* means a project using funds appropriated under the heading 'Department of Energy-Clean Coal Technology', up to a total amount of $2,500,000,000 for commercial demonstration of clean coal technology, or similar projects funded through appropriations for the Environmental Protection Agency. The Federal contribution for a qualifying project shall be at least 20 percent of the total cost of the demonstration project.

(24) *Pollution control project* means any activity or project undertaken at an existing electric utility steam generating unit for purposes of reducing emissions from such unit. Such activities or projects are limited to:

(i) The installation of conventional or innovative pollution control technology, including but not limited to advanced flue gas desulfurization, sorbent injection for sulfur dioxide and nitrogen oxides controls and electrostatic precipitators;

(ii) An activity or project to accommodate switching to a fuel which is less polluting than the fuel in use prior to the activity or project including, but not limited to natural gas or coal re-burning, co-firing of natural gas and other fuels for the purpose of controlling emissions;

(iii) A permanent clean coal technology demonstration project conducted under title II, section 101(d) of the Further Continuing Appropriations Act of 1985 (section 5903(d) of title 42 of the United States Code), or subsequent appropriations, up to a total amount of $2,500,000,000 for commercial demonstration of clean coal technology, or similar projects funded through appropriations for the Environmental Protection Agency; or

(iv) A permanent clean coal technology demonstration project that constitutes a repowering project.

(g) This section shall not apply to a major stationary source or major modification if the source or modification was not subject to 40 CFR part 51 Appendix S, as in effect on January 16, 1979, and the owner or operator:

(1) Obtained all final Federal, state, and local preconstruction approvals or permits necessary under the applicable State Implementation Plan before August 7, 1980;

(2) Commenced construction within 18 months from August 7, 1980, or any earlier time required under the applicable State Implementation Plan; and

(3) Did not discontinue construction for a period of 18 months or more and completed construction within a reasonable time.

(h) This section shall not apply to a source or modification that would be a major stationary source or major modification only if fugitive emissions, to the extent quantifiable, are considered in calculating the potential to emit of the stationary source or modification and the source does not belong to any of the following categories:

(1) Coal cleaning plants (with thermal dryers);
(2) Kraft pulp mills;
(3) Portland cement plants;
(4) Primary zinc smelters;
(5) Iron and steel mills;
(6) Primary aluminum ore reduction plants;
(7) Primary copper smelters;
(8) Municipal incinerators capable of charging more than 250 tons of refuse per day;
(9) Hydrofluoric, sulfuric, or nitric acid plants;
(10) Petroleum refineries;
(11) Lime plants;
(12) Phosphate rock processing plants;
(13) Coke oven batteries;
(14) Sulfur recovery plants;
(15) Carbon black plants (furnace process);
(16) Primary lead smelters;
(17) Fuel conversion plants;
(18) Sintering plants;
(19) Secondary metal production plants;
(20) Chemical process plants;
(21) Fossil-fuel boilers (or combination thereof) totaling more than 250 million British thermal units per hour heat input;
(22) Petroleum storage and transfer units with a total storage capacity exceeding 300,000 barrels;
(23) Taconite ore processing plants;
(24) Glass fiber processing plants;
(25) Charcoal production plants;
(26) Fossil fuel-fired steam electric plants of more than 250 million British thermal units per hour heat input;
(27) Any other stationary source category which, as of August 7, 1980, is being regulated under section 111 or 112 of the Act.

(i) At such time that a particular source or modification becomes a major stationary source or major modification solely by virtue of a relaxation in any enforceable limitation which was established after August 7, 1980, on the capacity of the source or modification otherwise to emit a pollutant, such as a restriction on hours of operation, then:

(1) If the construction moratorium imposed pursuant to this section is still in effect for the nonattainment area in which the source or modification is located, then the permit may not be so revised; or

(2) If the construction moratorium is no longer in effect in that area, then the requirements of 40 CFR 51.165(a) shall apply to the source or modification as though construction had not yet commenced on the source or modification.

(j) This section does not apply to major stationary sources or major modifications locating in a clearly defined part of a nonattainment area (such as a political subdivision of a State), where EPA finds that a plan which meets the requirements of Part D is in effect and is being implemented in that part.

(k) For an area designated as nonattainment after July 1, 1979, the restrictions in paragraphs (a) and (b) of this section shall not apply prior to eighteen months after the date the area is designated as nonattainment. The Offset Ruling shall govern permits to construct and operate applied for during the period between the date of designation as nonattainment and either the date the Part D plan is approved or the date the restrictions in paragraphs (a) and (b) of this section apply, whichever is earlier.

[44 FR 38473, July 2, 1979]

EDITORIAL NOTE: For FEDERAL REGISTER citations affecting § 52.24, see the List of CFR Sections Affected in the Finding Aids section of this volume.

§ 52.26 Visibility monitoring strategy.

(a) *Plan Disapprovals.* The provisions of this section are applicable to any State implementation plan which has been disapproved with respect to visibility monitoring. Specific disapprovals are listed where applicable in Subparts B through DD of this part. The provisions of this section have been incorporated by reference into the applicable implementation plan for various States, as provided in Subparts B through DDD of this part.

(b) *Definitions.* For the purposes of this section:

(1) *Visibility protection area* means any area listed in 40 CFR 81.401–81.436 (1984).

(2) All other terms shall have the meaning ascribed to them in the Clean

Air Act, or in the protection of visibility program (40 CFR 51.301), all as in effect on July 12, 1985.

(c) *Monitoring Requirements.* (1) The Administrator, in cooperation with the appropriate Federal land manager, shall monitor visibility within each visibility protection area in any State whose State implementation plan is subject to a disapproval for failure to satisfy 40 CFR 51.305 (1984).

(2) The Administrator, in monitoring visibility within each such area, shall determine both background visibility conditions and reasonably attributable visibility impairment caused by a source or small group of sources for that area. The extent and the form of monitoring shall be sufficient for use in determining the potential effects of a new stationary source on visibility in the area, the stationary source or sources that are causing any visibility impairment, and progress toward remedying that impairment.

(3) The Administrator shall use the following as appropriate to monitor visibility within each such area: (i) photographic cameras, (ii) fine particulate matter samplers, (iii) teleradiometers, (iv) nephelometers, (v) human observation, or (vi) other appropriate technology.

(4) The Administrator, in cooperation with the Federal land managers, shall prepare monitoring plans that describe, to the maximum extent practicable, the methods and instruments of data collection, the monitoring locations and frequencies, the implementation schedule, the quality assurance procedures, and the methods of data reporting that the Administrator will use for each area. The Administrator shall make these plans available to the public.

(5) The Administrator shall establish a central repository of monitoring data that includes any data on background visibility conditions and reasonably attributable impairment that the Administrator collects under this section and that the Federal land manager may collect or may have collected independently. These data shall be available to any person, subject to reasonable charges for copying.

(d) *Monitoring Plan Revision.* (1) The Administrator shall review the monitoring plan annually for each visibility protection area, revise it as necessary, and include an assessment of changes to visibility conditions since the last review. The Administrator shall make all plan revisions available to the public.

(2) Any person may make a request to the Administrator, at any time, for a revision to a monitoring plan. The Administrator shall respond to any such request within one year.

(e) *Delegation.* The Administrator may delegate, with respect to a particular visibility protection area, any of his functions under this section to any State or local air pollution control agency of any State whose boundaries encompass that area or to any Federal land manager with jurisdiction over the area.

[50 FR 28550, July 12, 1985]

§52.27 Protection of visibility from sources in attainment areas.

(a) *Plan disapproval.* The provisions of this section are applicable to any State implementation plan which has been disapproved with respect to protection of visibility, in mandatory Class I Federal areas, from sources emitting pollutants in any portion of any State where the existing air quality is better than the national ambient air quality standards for such pollutants, and where a State PSD program has been approved as part of the applicable SIP pursuant to 40 CFR 51.24. Specific disapprovals are listed where applicable in Subparts B through DDD of this part. The provisions of this section have been incorporated by reference into the applicable implementation plans for various States, as provided in Subparts B through DDD of this part.

(b) *Definitions.* For purposes of this section, all terms shall have the meaning ascribed to them in the Clean Air Act, in the prevention of significant deterioration (PSD) program approved as part of the applicable SIP pursuant to 40 CFR 51.24 for the State, or in the protection of visibility program (40 CFR 51.301), all as in effect on July 12, 1985.

(c) *Federal visibility analysis.* Any person shall have the right, in connection with any application for a permit to construct a major stationary source or

major modification, to request that the administrator take responsibility from the State for conducting the required review of a proposed source's impact on visibility in any Fedral Class I area. If requested, the Administrator shall take such responsibility and conduct such review pursuant to paragraphs (e), (f) and (g) of this section in any case where the State fails to provide all of the procedural steps listed in paragraph (d) of this section. A request pursuant to this paragraph must be made within 60 days of the notice soliciting public comment on a permit, unless such notice is not properly given. The Administrator will not entertain requests challenging the substance of any State action concerning visibility where the State has provided all of the procedural steps listed in paragraph (d) of this section.

(d) *Procedural steps in visibility review.* (1) The reviewing authority must provide written notification to all affected Federal land managers of any permit application for any proposed new major stationary source or major modification that may affect visibility in any Federal Class I area. Such notification shall include a copy of all information relevant to the permit application and shall be given within 30 days of receipt and at least 60 days prior to any public hearing on the application for a permit to construct. Such notification shall include the proposed source's anticipated impacts on visibility in any Federal Class I area as provided by the applicant. Notification must also be given to all affected Federal land managers within 30 days of receipt of any advance notification of any such permit application.

(2) The reviewing authority must consider any analysis performed by the Federal land managers, provided within 30 days of the notification required by paragraph (d)(1) of this section, that shows that such proposed new major stationary source or major modification may have:

(i) An adverse impact on visibility in any Federal Class I area, or

(ii) An adverse impact on visibility in an integral vista codified in part 81 of this title.

(3) Where the reviewing authority finds that such an analysis does not demonstrate that the effect in paragraphs (d)(2) (i) or (ii) of this section will occur, either an explanation of its decision or notification as to where the explanation can be obtained must be included in the notice of public hearing.

(4) Where the reviewing authority finds that such an analysis does demonstrate that the effect in paragraph (d)(2)(i) of this section will occur, the permit shall not be issued.

(5) Where the reviewing authority finds that such an analysis does demonstrate that the effect in paragraph (d)(2)(ii) of this section will occur, the reviewing authority may issue a permit if the emissions from the source or modification will be consistent with reasonable progress toward the national goal. In making this decision, the reviewing authority may take into account the costs of compliance, the time necessary for compliance, the energy and nonair quality environmental impacts of compliance, and the useful life of the source.

(e) *Federal land manager notification.* The Administrator shall provide all of the procedural steps listed in paragraph (d) of this section in conducting reviews pursuant to this section.

(f) *Monitoring.* The Administrator may require monitoring of visibility in any Federal Class I area near the proposed new stationary source or major modification for such purposes and by such means as the Administrator deems necessary and appropriate.

(g) *Public participation.* The Administrator shall follow the applicable procedures at 40 CFR part 124 in conducting reviews under this section. The Administrator shall follow the procedures at 40 CFR 52.21(q) as in effect on August 7, 1980, to the extent that the procedures of 40 CFR part 124 do not apply.

(h) *Federal permit.* In any case where the Administrator has made a finding that a State consistently fails or is unable to provide the procedural steps listed in paragraph (d) of this section, the Administrator shall require all prospective permit applicants in such State to apply directly to the Administrator, and the Administrator shall

conduct a visibility review pursuant to this section for all permit applications.

[50 FR 28551, July 12, 1985, as amended at 52 FR 45137, Nov. 24, 1987]

§52.28 Protection of visibility from sources in nonattainment areas.

(a) *Plan disapproval.* The provisions of this section are applicable to any State implementation plan which has been disapproved with respect to protection of visibility, in mandatory Class I Federal areas where visibility is considered an important value, from sources emitting pollutants in any portion of any State where the existing air quality is not in compliance with the national ambient air quality standards for such pollutants. Specific disapprovals are listed where applicable in Subparts B through DDD of this part. The provisions of this section have been incorporated into the applicable implementation plans for various States, as provided in Subparts B through DDD of this part.

(b) *Definitions.* For the purposes of this section:

(1) *Visibility protection area* means any area listed in 40 CFR 81.401–81.436 (1984).

(2) All other terms shall have the meaning ascribed to them in the protection of visibility program (40 CFR 51.301) or the prevention of significant deterioration (PSD) program either approved as part of the applicable SIP pursuant to 40 CFR 51.24 or in effect for the applicable SIP pursuant to 40 CFR 52.21, all as in effect on July 12, 1985.

(c) *Review of major stationary sources and major modifications—source applicability and exemptions.* (1) No stationary source or modification to which the requirements of this section apply shall begin actual construction without a permit which states that the stationary source or modification would meet those requirements. The Administrator has sole authority to issue any such permit unless the authority has been delegated pursuant to paragraph (i) of this section.

(2) The requirements of this section shall apply to construction of any new major stationary source or major modification that would both be constructed in an area classified as nonattainment under section 107(d)(1)(A), (B) or (C) of the Clean Air Act and potentially have an impact on visibility in any visibility proctection area.

(3) The requirements of this section shall apply to any such major stationary source and any such major modification with respect to each pollutant subject to regulation under the Clean Air Act that it would emit, except as this section otherwise provides.

(4) The requirements of this section shall not apply to a particular major stationary source or major modification, if:

(i) The source or modification would be a nonprofit health or nonprofit educational institution, or a major modification would occur at such an institution, and the governor of the State in which the source or modification would be located requests that it be exempt from those requirements; or

(ii) The source or modification would be a major stationary source or major modification only if fugitive emissions, to the extent quantifiable, are considered in calculating the potential to emit of the stationary source or modification and the source does not belong to any of the following categories:

(A) Coal cleaning plants (with thermal dryers);

(B) Kraft pulp mills;

(C) Portland cement plants;

(D) Primary zinc smelters;

(E) Iron and steel mills;

(F) Primary aluminum ore reduction plants;

(G) Primary copper smelters;

(H) Municipal incinerators capable of charging more than 250 tons of refuse per day;

(I) Hydrofluoric, sulfuric, or nitric acid plants;

(J) Petroleum refineries;

(K) Lime plants;

(L) Phosphate rock processing plants;

(M) Coke oven batteries;

(N) Sulfur recovery plants;

(O) Carbon black plants (furnace process);

(P) Primary lead smelters;

(Q) Fuel conversion plants;

(R) Sintering plants;

(S) Secondary metal production plants;

(T) Chemical process plants;

(U) Fossil-fuel boiler (or combination thereof) totaling more than 250 million

British thermal units per hour heat input;

(V) Petroleum storage and transfer units with a total storage capacity exceeding 300,000 barrels;

(W) Taconite ore processing plants;

(X) Glass fiber processing plants;

(Y) Charcoal production plants;

(Z) Fossil fuel-fired steam electric plants of more than 250 million British thermal units per hour heat input;

(AA) Any other stationary source category which, as of August 7, 1980, is being regulated under section 111 or 112 of the Act; or

(iii) The source is a portable stationary source which has previously received a permit under this section, and

(A) The owner or operator proposes to relocate the source and emissions of the source at the new location would be temporary; and

(B) The emissions from the source would not exceed its allowable emissions; and

(C) The emissions from the source would impact no Class I area and no area where an applicable increment is known to be violated; and

(D) Reasonable notice is given to the Administrator, prior to the relocation, identifying the proposed new location and the probable duration of operation at the new location. Such notice shall be given to the Administrator not less than 10 days in advance of the proposed relocation, unless a different time duration is previously approved by the Administrator.

(5) The requirements of this section shall not apply to a major stationary source or major modification with respect to a particular pollutant if the owner or operator demonstrates that, as to that pollutant, the source or modification is located in an area designated as attainment under section 107 of the Clean Air Act.

(6) The requirements of this section shall not apply to a major stationary source or major modification with respect to a particular pollutant, if the allowable emissions of that pollutant from the source, or the net emissions increase of that pollutant from the modification:

(i) Would impact no Class I area and no area where an applicable increment is known to be violated, and

(ii) Would be temporary.

(d) *Visibility Impact Analyses.* The owner or operator of a source shall provide an analysis of the impairment to visibility that would occur as a result of the source or modification and general commercial, residential, industrial and other growth associated with the source or modification.

(e) *Federal land manager notification.* (1) The Federal land manager and the Federal official charged with direct responsibility for management of Federal Class I areas have an affirmative responsibility to protect the air quality related values (including visibility) of such lands and to consider, in consultation with the Administrator, whether a proposed source or modification will have an adverse impact on such values.

(2) The Administrator shall provide written notification to all affected Federal land managers of any permit application for any proposed new major stationary source or major modification that may affect visibility in any visibility protection area.The Administrator shall also provide for such notification to the Federal official charged with direct responsibility for management of any lands within any such area. Such notification shall include a copy of all information relevant to the permit application and shall be given within 30 days of receipt and at least 60 days prior to any public hearing on the application for a permit to construct. Such notification shall include an analysis of the proposed source's anticipated impacts on visibility in any visibility protection area. The Administrator shall also notify all affected FLM's within 30 days of receipt of any advance notification of any such permit application.

(3) The Administrator shall consider any analysis performed by the Federal land manager, provided within 30 days of the notification required by paragraph (e)(2) of this section, that such proposed new major stationary source or major modification may have an adverse impact on visibility in any visibility protection area. Where the Administrator finds that such an analysis does not demonstrate to the satisfaction of the Administrator that an adverse impact on visibility will result in

the visibility protection area, the Administrator must, in the notice of public hearing, either explain his decision or give notice as to where the explanation can be obtained.

(f) *Public participation.* The Administrator shall follow the applicable procedures of 40 CFR part 124 in processing applications under this section. The Administrator shall follow the procedures at 40 CFR 52.21(q) as in effect on August 7, 1980, to the extent that the procedures of 40 CFR part 124 do not apply.

(g) *National visibility goal.* The Administrator shall only issue permits to those sources whose emissions will be consistent with making reasonable progress toward the national goal of preventing any future, and remedying any existing, impairment of visibility in visibility protection areas which impairment results from man-made air pollution. In making the decision to issue a permit, the Administrator may take into account the costs of compliance, the time necessary for compliance, the energy and nonair quality environmental impacts of compliance, and the useful life of the source.

(h) *Monitoring.* The Administrator may require monitoring of visibility in any visibility protection area near the proposed new stationary source or major modification for such purposes and by such means as the Administrator deems necessary and appropriate.

(i) *Delegation of authority.* (1) The Administrator shall have the authority to delegate the responsibility for conducting source review pursuant to this section to any agency in accordance with paragraphs (i)(2) and (3) of this section.

(2) Where the Administrator delegates the responsibility for conducting source review under this section to any agency other than a Regional Office of the Environmental Protection Agency, the following provisions shall apply:

(i) Where the delegate agency is not an air pollution control agency it shall consult with the appropriate State and local air pollution control agency prior to making any determination under this section. Similarly, where the delegate agency does not have continuing responsibility for managing land use, it shall consult with the appropriate State and local agency primarily responsible for managing land use prior to making any determination under this section.

(ii) The delegate agency shall submit a copy of any public comment notice required under paragraph (f) of this section to the Administrator through the appropriate Regional Office.

(3) The Administrator's authority for reviewing a source or modification located on an Indian Reservation shall not be redelegated other than to a Regional Office of the Environmental Protection Agency, except where the State has assumed jurisdiction over such land under other laws. Where the State has assumed such jurisdiction, the Administrator may delegate his authority to the States in accordance with paragraph (i)(2) of this section.

[50 FR 28551, July 12, 1985]

§52.29 Visibility long-term strategies.

(a) *Plan disapprovals.* The provisions of this section are applicable to any State implementation plan which has been disapproved for not meeting the requirements of 40 CFR 51.306 regarding the development, periodic review, and revision of visibility long-term strategies. Specific disapprovals are listed where applicable in Subparts B through DDD of this part. The provisions of this section have been incorporated into the applicable implementation plan for various States, as provided in Subparts B through DDD of this part.

(b) *Definitions.* For the purposes of this section, all terms shall have the meaning as ascribed to them in the Clean Air Act, or in the protection of visibility program (40 CFR 51.301).

(c) *Long-term strategy.* (1) A long-term strategy is a 10- to 15-year plan for making reasonable progress toward the national goal specified in §51.300(a). This strategy will cover any existing impairment certified by the Federal land manager and any integral vista which has been identified according to §51.304.

(2) The Administrator shall review, and revise if appropriate, the long-term strategies developed for each visibility protection area. The review and revisions will be completed no less frequently than every 3 years from November 24, 1987.

(3) During the long-term strategy review process, the Administrator shall consult with the Federal land managers responsible for the appropriate mandatory Class I Federal areas, and will coordinate long-term strategy development for an area with existing plans and goals, including those provided by the Federal land managers.

(4) The Administrator shall prepare a report on any progress made toward the national visibility goal since the last long-term strategy revisions. A report will be made available to the public not less frequently than 3 years from November 24, 1987. This report must include an assessment of:

(i) The progress achieved in remedying existing impairment of visibility in any mandatory Class I Federal area;

(ii) The ability of the long-term strategy to prevent future impairment of visibility in any mandatory Class I Federal area;

(iii) Any change in visibility since the last such report, or in the case of the first report, since plan approval;

(iv) Additional measures, including the need for SIP revisions, that may be necessary to assure reasonable progress toward the national visibility goal;

(v) The progress achieved in implementing best available retrofit technology (BART) and meeting other schedules set forth in the long-term strategy;

(vi) The impact of any exemption granted under § 51.303;

(vii) The need for BART to remedy existing visibility impairment of any integral vista identified pursuant to § 51.304.

(d) *Delegation of authority.* The Administrator may delegate with respect to a particular visibility protection area any of his functions under this section, except the making of regulations, to any State or local air pollution control agency of any State whose boundaries encompass that area.

[52 FR 45137, Nov. 24, 1987]

§ 52.30 Criteria for limiting application of sanctions under section 110(m) of the Clean Air Act on a statewide basis.

(a) *Definitions.* For the purpose of this section:

(1) The term ''political subdivision'' refers to the representative body that is responsible for adopting and/or implementing air pollution controls for one, or any combination of one or more of the following: city, town, borough, county, parish, district, or any other geographical subdivision created by, or pursuant to, Federal or State law. This will include any agency designated under section 174, 42 U.S.C. 7504, by the State to carry out the air planning responsibilities under part D.

(2) The term ''required activity'' means the submission of a plan or plan item, or the implementation of a plan or plan item.

(3) The term ''deficiency'' means the failure to perform a required activity as defined in paragraph (a)(2) of this section.

(4) For purposes of § 52.30, the terms ''plan'' or ''plan item'' mean an implementation plan or portion of an implementation plan or action needed to prepare such plan required by the Clean Air Act, as amended in 1990, or in response to a SIP call issued pursuant to section 110(k)(5) of the Act.

(b) *Sanctions.* During the 24 months after a finding, determination, or disapproval under section 179(a) of the Clean Air Act is made, EPA will not impose sanctions under section 110(m) of the Act on a statewide basis if the Administrator finds that one or more political subdivisions of the State are principally responsible for the deficiency on which the finding, disapproval, or determination as provided under section 179(a)(1) through (4) is based.

(c) *Criteria.* For the purposes of this provision, EPA will consider a political subdivision to be principally responsible for the deficiency on which a section 179(a) finding is based, if all five of the following criteria are met.

(1) The State has provided adequate legal authority to a political subdivision to perform the required activity.

(2) The required activity is one which has traditionally been performed by the local political subdivision, or the responsibility for performing the required activity has been delegated to the political subdivision.

(3) The State has provided adequate funding or authority to obtain funding

(when funding is necessary to carry out the required activity) to the political subdivision to perform the required activity.

(4) The political subdivision has agreed to perform (and has not revoked that agreement), or is required by State law to accept responsibility for performing, the required activity.

(5) The political subdivision has failed to perform the required activity.

(d) *Imposition of sanctions.* (1) If all of the criteria in paragraph (c) of this section have been met through the action or inaction of one political subdivision, EPA will not impose sanctions on a statewide basis.

(2) If not all of the criteria in paragraph (c) of this section have been met through the action or inaction of one political subdivision, EPA will determine the area for which it is reasonable and appropriate to apply sanctions.

[59 FR 1484, Jan. 11, 1994]

§52.31 Selection of sequence of mandatory sanctions for findings made pursuant to section 179 of the Clean Air Act.

(a) *Purpose.* The purpose of this section is to implement 42 U.S.C. 7509(a) of the Act, with respect to the sequence in which sanctions will automatically apply under 42 U.S.C. 7509(b), following a finding made by the Administrator pursuant to 42 U.S.C. 7509(a).

(b) *Definitions.* All terms used in this section, but not specifically defined herein, shall have the meaning given them in §52.01.

(1) *1990 Amendments* means the 1990 Amendments to the Clean Air Act (Pub. L. No. 101–549, 104 Stat. 2399).

(2) *Act* means Clean Air Act, as amended in 1990 (42 U.S.C. 7401 *et seq.* (1991)).

(3) *Affected area* means the geographic area subject to or covered by the Act requirement that is the subject of the finding and either, for purposes of the offset sanction under paragraph (e)(1) of this section and the highway sanction under paragraph (e)(2) of this section, is or is within an area designated nonattainment under 42 U.S.C. 7407(d) or, for purposes of the offset sanction under paragraph (e)(1) of this section, is or is within an area otherwise subject to the emission offset requirements of 42 U.S.C. 7503.

(4) *Criteria pollutant* means a pollutant for which the Administrator has promulgated a national ambient air quality standard pursuant to 42 U.S.C. 7409 (i.e., ozone, lead, sulfur dioxide, particulate matter, carbon monoxide, nitrogen dioxide).

(5) *Findings* or *Finding* refer(s) to one or more of the findings, disapprovals, and determinations described in subsection 52.31 (c).

(6) *NAAQS* means national ambient air quality standard the Administrator has promulgated pursuant to 42 U.S.C. 7409.

(7) *Ozone precursors* mean nitrogen oxides (NO_x) and volatile organic compounds (VOC).

(8) *Part D* means part D of title I of the Act.

(9) *Part D SIP or SIP revision* or *plan* means a State implementation plan or plan revision that States are required to submit or revise pursuant to part D.

(10) *Precursor* means pollutant which is transformed in the atmosphere (later in time and space from point of emission) to form (or contribute to the formation of) a criteria pollutant.

(c) *Applicability.* This section shall apply to any State in which an affected area is located and for which the Administrator has made one of the following findings, with respect to any part D SIP or SIP revision required under the Act:

(1) A finding that a State has failed, for an area designated nonattainment under 42 U.S.C. 7407(d), to submit a plan, or to submit one or more of the elements (as determined by the Administrator) required by the provisions of the Act applicable to such an area, or has failed to make a submission for such an area that satisfies the minimum criteria established in relation to any such element under 42 U.S.C. 7410(k);

(2) A disapproval of a submission under 42 U.S.C. 7410(k), for an area designated nonattainment under 42 U.S.C. 7407(d), based on the submission's failure to meet one or more of the elements required by the provisions of the Act applicable to such an area;

(3)(i) A determination that a State has failed to make any submission required under the Act, other than one described under paragraph (c)(1) or (c)(2) of this section, including an adequate maintenance plan, or has failed to make any submission, required under the Act, other than one described under paragraph (c)(1) or (c)(2) of this section, that satisfies the minimum criteria established in relation to such submission under 42 U.S.C. 7410(k)(1)(A); or

(ii) A disapproval in whole or in part of a submission described under paragraph (c)(3)(i) of this section; or

(4) A finding that any requirement of an approved plan (or approved part of a plan) is not being implemented.

(d) *Sanction application sequencing.* (1) To implement 42 U.S.C. 7509(a), the offset sanction under paragraph (e)(1) of this section shall apply in an affected area 18 months from the date when the Administrator makes a finding under paragraph (c) of this section unless the Administrator affirmatively determines that the deficiency forming the basis of the finding has been corrected. To further implement 42 U.S.C. 7509(a), the highway sanction under paragraph (e)(2) of this section shall apply in an affected area 6 months from the date the offset sanction under paragraph (e)(1) of this section applies, unless the Administrator affirmatively determines that the deficiency forming the basis of the finding has been corrected. For the findings under paragraphs (c)(2), (c)(3)(ii), and (c)(4) of this section, the date of the finding shall be the effective date as defined in the final action triggering the sanctions clock.

(2)(i) Notwithstanding paragraph (d)(1) of this section, to further implement 42 U.S.C. 7509(a), following the findings under paragraphs (c)(2) and (c)(3)(ii) of this section, if the State has submitted a revised plan to correct the deficiency prompting the finding and the Administrator, prior to 18 months from the finding, has proposed to fully or conditionally approve the revised plan and has issued an interim final determination that the revised plan corrects the deficiency prompting the finding, application of the offset sanction under paragraph (e)(1) of this section shall be deferred unless and until the Administrator proposes to or takes final action to disapprove the plan in whole or in part. If the Administrator issues such a proposed or final disapproval of the plan, the offset sanction under paragraph (e)(1) of this section shall apply in the affected area on the later of the date the Administrator issues such a proposed or final disapproval, or 18 months following the finding that started the sanctions clock. The highway sanction under paragraph (e)(2) of this section shall apply in the affected area 6 months after the date the offset sanction under paragraph (e)(1) of this section applies, unless the Administrator determines that the deficiency forming the basis of the finding has been corrected.

(ii) Notwithstanding paragraph (d)(1) of this section, to further implement 42 U.S.C. 7509(a), following the findings under paragraphs (c)(2) and (c)(3)(ii) of this section, if the State has submitted a revised plan to correct the deficiency prompting the finding and after 18 but before 24 months from the finding the Administrator has proposed to fully or conditionally approve the revised plan and has issued an interim final determination that the revised plan corrects the deficiency prompting the finding, application of the offset sanction under paragraph (e)(1) of this section shall be stayed and application of the highway sanction under paragraph (e)(2) of this section shall be deferred unless and until the Administrator proposes to or takes final action to disapprove the plan in whole or in part. If the Administrator issues such a proposed or final disapproval of the plan, the offset sanction under paragraph (e)(1) of this section shall reapply in the affected area on the date the Administrator issues such a proposed or final disapproval. The highway sanction under paragraph (e)(2) of this section shall apply in the affected area on the later of 6 months from the date the offset sanction under paragraph (e)(1) of this section first applied in the affected area, unless the Administrator determines that the deficiency forming the basis of the finding has been corrected, or immediately if the proposed or final disapproval occurs more than 6 months after initial

application of the offset sanction under paragraph (e)(1) of this section.

(iii) Notwithstanding paragraph (d)(1) of this section, to further implement 42 U.S.C. 7509(a), following the findings under paragraphs (c)(2) and (c)(3)(ii) of this section, if the State has submitted a revised plan to correct the deficiency prompting the finding and more than 24 months after the finding the Administrator has proposed to fully or conditionally approve the revised plan and has issued an interim final determination that the revised plan corrects the deficiency prompting the finding, application of the offset sanction under paragraph (e)(1) of this section and application of the highway sanction under paragraph (e)(2) of this section shall be stayed unless and until the Administrator proposes to or takes final action to disapprove the plan in whole or in part. If the Administrator issues such a proposed or final disapproval, the offset sanction under paragraph (e)(1) of this section and the highway sanction under paragraph (e)(2) of this section shall reapply in the affected area on the date the Administrator issues such proposed or final disapproval.

(3)(i) Notwithstanding paragraph (d)(1) of this section, to further implement 42 U.S.C. 7509(a), following the findings under paragraphs (c)(2) and (c)(3)(ii) of this section, if the State has submitted a revised plan to correct the deficiency prompting the finding and the Administrator, prior to 18 months from the finding, has conditionally-approved the revised plan and has issued an interim final determination that the revised plan corrects the deficiency prompting the finding, application of the offset sanction under paragraph (e)(1) of this section shall be deferred unless and until the conditional approval converts to a disapproval or the Administrator proposes to or takes final action to disapprove in whole or in part the revised SIP the State submits to fulfill the commitment in the conditionally-approved plan. If the conditional approval so becomes a disapproval or the Administrator issues such a proposed or final disapproval, the offset sanction under paragraph (e)(1) of this section shall apply in the affected area on the later of the date the approval becomes a disapproval or the Administrator issues such a proposed or final disapproval, whichever is applicable, or 18 months following the finding that started the sanctions clock. The highway sanction under paragraph (e)(2) of this section shall apply in the affected area 6 months after the date the offset sanction under paragraph (e)(1) of this section applies, unless the Administrator determines that the deficiency forming the basis of the finding has been corrected.

(ii) Notwithstanding paragraph (d)(1) of this section, to further implement 42 U.S.C. 7509(a), following the findings under paragraphs (c)(2) and (c)(3)(ii) of this section, if the State has submitted a revised plan to correct the deficiency prompting the finding and after 18 but before 24 months from the finding the Administrator has conditionally approved the revised plan and has issued an interim final determination that the revised plan corrects the deficiency prompting the finding, application of the offset sanction under paragraph (e)(1) of this section shall be stayed and application of the highway sanction under paragraph (e)(2) of this section shall be deferred unless and until the conditional approval converts to a disapproval or the Administrator proposes to or takes final action to disapprove in whole or in part the revised SIP the State submits to fulfill the commitment in the conditionally-approved plan. If the conditional approval so becomes a disapproval or the Administrator issues such a proposed or final disapproval, the offset sanction under paragraph (e)(1) of this section shall reapply in the affected area on the date the approval becomes a disapproval or the Administrator issues such a proposed or final disapproval, whichever is applicable. The highway sanction under paragraph (e)(2) of this section shall apply in the affected area on the later of 6 months from the date the offset sanction under paragraph (e)(1) of this section first applied in the affected area, unless the Administrator determines that the deficiency forming the basis of the finding has been corrected, or immediately if the conditional approval becomes a disapproval or the Administrator issues such a proposed or final disapproval, whichever is applicable, more than 6 months after initial

application of the offset sanction under paragraph (e)(1) of this section.

(iii) Notwithstanding paragraph (d)(1) of this section, to further implement 42 U.S.C. 7509(a), following the findings under paragraphs (c)(2) and (c)(3)(ii) of this section, if the State has submitted a revised plan to correct the deficiency prompting the finding and after 24 months from the finding the Administrator has conditionally approved the revised plan and has issued an interim final determination that the revised plan corrects the deficiency prompting the finding, application of the offset sanction under paragraph (e)(1) of this section and application of the highway sanction under paragraph (e)(2) of this section shall be stayed unless and until the conditional approval converts to a disapproval or the Administrator proposes to or takes final action to disapprove in whole or in part the revised SIP the State submits to fulfill its commitment in the conditionally-approved plan. If the conditional approval so becomes a disapproval or the Administrator issues such a proposed or final disapproval, the offset sanction under paragraph (e)(1) of this section and the highway sanction under paragraph (e)(2) of this section shall reapply in the affected area on the date the conditional approval becomes a disapproval or the Administrator issues such a proposed or final disapproval, whichever is applicable.

(4)(i) Notwithstanding paragraph (d)(1) of this section, to further implement 42 U.S.C. 7509(a), following findings under paragraph (c)(4) of this section, if the Administrator, prior to 18 months from the finding, has proposed to find that the State is implementing the approved plan and has issued an interim final determination that the deficiency prompting the finding has been corrected, application of the offset sanction under paragraph (e)(1) of this section shall be deferred unless and until the Administrator preliminarily or finally determines, through a proposed or final finding, that the State is not implementing the approved plan and that, therefore, the State has not corrected the deficiency. If the Administrator so preliminarily or finally determines that the State has not corrected the deficiency, the offset sanction under paragraph (e)(1) of this section shall apply in the affected area on the later of the date the Administrator proposes to take action or takes final action to find that the finding of nonimplementation has not been corrected, or 18 months following the finding that started the sanctions clock. The highway sanction under paragraph (e)(2) of this section shall apply in the affected area 6 months after the date the offset sanction under paragraph (e)(1) of this section first applies, unless the Administrator preliminarily or finally determines that the deficiency forming the basis of the finding has been corrected.

(ii) Notwithstanding paragraph (d)(1) of this section, to further implement 42 U.S.C. 7509(a), following findings under paragraph (c)(4) of this section, if after 18 months but before 24 months from the finding the Administrator has proposed to find that the State is implementing the approved plan and has issued an interim final determination that the deficiency prompting the finding has been corrected, application of the offset sanction under paragraph (e)(1) of this section shall be stayed and application of the highway sanction under paragraph (e)(2) of this section shall be deferred unless and until the Administrator preliminarily or finally determines, through a proposed or final finding, that the State is not implementing the approved plan and that, therefore, the State has not corrected the deficiency. If the Administrator so preliminarily or finally determines that the State has not corrected the deficiency, the offset sanction under paragraph (e)(1) of this section shall reapply in the affected area on the date the Administrator proposes to take action or takes final action to find that the finding of nonimplementation has not been corrected. The highway sanction under paragraph (e)(2) of this section shall apply in the affected area on the later of 6 months from the date the offset sanction under paragraph (e)(1) of this section first applied in the affected area, unless the Administrator preliminarily or finally determines that the deficiency forming the basis of the finding has been corrected, or immediately if EPA's proposed or final action finding the deficiency has not

been corrected occurs more than 6 months after initial application of the offset sanction under paragraph (e)(1) of this section.

(iii) Notwithstanding paragraph (d)(1) of this section, to further implement 42 U.S.C. 7509(a), following findings under paragraph (c)(4) of this section, if after 24 months from the finding the Administrator has proposed to find that the State is implementing the approved plan and has issued an interim final determination that the deficiency prompting the finding has been corrected, application of the offset sanction under paragraph (e)(1) of this section and the highway sanction under paragraph (e)(2) of this section shall be stayed unless and until the Administrator preliminarily or finally determines, through a proposed or final finding, that the State is not implementing the approved plan, and that, therefore, the State has not corrected the deficiency. If the Administrator so preliminarily or finally determines that the State has not corrected the deficiency, the offset sanction under paragraph (e)(1) of this section and the highway sanction under paragraph (e)(2) of this section shall reapply in the affected area on the date the Administrator proposes to take action or takes final action to find that the finding of nonimplementation has not been corrected.

(5) Any sanction clock started by a finding under paragraph (c) of this section will be permanently stopped and sanctions applied, stayed or deferred will be permanently lifted upon a final EPA finding that the deficiency forming the basis of the finding has been corrected. For a sanctions clock and applied sanctions based on a finding under paragraphs (c)(1) and (c)(3)(i) of this section, a finding that the deficiency has been corrected will occur by letter from the Administrator to the State governor. For a sanctions clock or applied, stayed or deferred sanctions based on a finding under paragraphs (c)(2) and (c)(3)(ii) of this section, a finding that the deficiency has been corrected will occur through a final notice in the FEDERAL REGISTER fully approving the revised SIP. For a sanctions clock or applied, stayed or deferred sanctions based on a finding under paragraph (c)(4) of this section, a finding that the deficiency has been corrected will occur through a final notice in the FEDERAL REGISTER finding that the State is implementing the approved SIP.

(6) Notwithstanding paragraph (d)(1) of this section, nothing in this section will prohibit the Administrator from determining through notice-and-comment rulemaking that in specific circumstances the highway sanction, rather than the offset sanction, shall apply 18 months after the Administrator makes one of the findings under paragraph (c) of this section, and that the offset sanction, rather than the highway sanction, shall apply 6 months from the date the highway sanction applies.

(e) *Available sanctions and method for implementation*—(1) *Offset sanction.* (i) As further set forth in paragraphs (e)(1)(ii)–(e)(1)(vi) of this section, the State shall apply the emissions offset requirement in the timeframe prescribed under paragraph (d) of this section on those affected areas subject under paragraph (d) of this section to the offset sanction. The State shall apply the emission offset requirements in accordance with 42 U.S.C. 7503 and 7509(b)(2), at a ratio of at least two units of emission reductions for each unit of increased emissions of the pollutant(s) and its (their) precursors for which the finding(s) under paragraph (c) of this section is (are) made. If the deficiency prompting the finding under paragraph (c) of this section is not specific to one or more particular pollutants and their precursors, the 2-to-1 ratio shall apply to all pollutants (and their precursors) for which an affected area within the State listed in paragraph (e)(1)(i) of this section is required to meet the offset requirements of 42 U.S.C. 7503.

(ii) Notwithstanding paragraph (e)(1)(i) of this section, when a finding is made with respect to a requirement for the criteria pollutant ozone or when the finding is not pollutant-specific, the State shall not apply the emissions offset requirements at a ratio of at least 2-to-1 for emission reductions to increased emissions for nitrogen oxides where, under 42 U.S.C.

7511a(f), the Administrator has approved an NO_X exemption for the affected area from the Act's new source review requirements under 42 U.S.C. 7501–7515 for NO_X or where the affected area is not otherwise subject to the Act's new source review requirements for emission offsets under 42 U.S.C. 7501–7515 for NO_X.

(iii) Notwithstanding paragraph (e)(1)(i) of this section, when a finding under paragraph (c) of this section is made with respect to PM–10, or the finding is not pollutant-specific, the State shall not apply the emissions offset requirements, at a ratio of at least 2-to-1 for emission reductions to increased emissions to PM–10 precursors if the Administrator has determined under 42 U.S.C. 7513a(e) that major stationary sources of PM–10 precursors do not contribute significantly to PM–10 levels which exceed the NAAQS in the affected area.

(iv) For purposes of applying the emissions offset requirement set forth in 42 U.S.C. 7503, at the 2-to-1 ratio required under this section, the State shall comply with the provisions of a State-adopted new source review (NSR) program that EPA has approved under 42 U.S.C. 7410(k)(3) as meeting the nonattainment area NSR requirements of 42 U.S.C. 7501–7515, as amended by the 1990 Amendments, or, if no plan has been so approved, the State shall comply directly with the nonattainment area NSR requirements specified in 42 U.S.C. 7501–7515, as amended by the 1990 Amendments, or cease issuing permits to construct and operate major new or modified sources as defined in those requirements. For purposes of applying the offset requirement under 42 U.S.C. 7503 where EPA has not fully approved a State's NSR program as meeting the requirements of part D, the specifications of those provisions shall supersede any State requirement that is less stringent or inconsistent.

(v) For purposes of applying the emissions offset requirement set forth in 42 U.S.C. 7503, any permit required pursuant to 42 U.S.C. 7503 and issued on or after the date the offset sanction applies under paragraph (d) of this section shall be subject to the enhanced 2-to-1 ratio under paragraph (e)(1)(i) of this section.

(2) *Highway funding sanction.* The highway sanction shall apply, as provided in 42 U.S.C. 7509(b)(1), in the timeframe prescribed under paragraph (d) of this section on those affected areas subject under paragraph (d) of this section to the highway sanction, but shall apply only to those portions of affected areas that are designated nonattainment under 40 CFR part 81.

[59 FR 39859, Aug. 4, 1994]

§ 52.32 Sanctions following findings of SIP inadequacy.

For purposes of the SIP revisions required by § 51.120, EPA may make a finding under section 179(a) (1)–(4) of the Clean Air Act, 42 U.S.C. 7509(a) (1)–(4), starting the sanctions process set forth in section 179(a) of the Clean Air Act. Any such finding will be deemed a finding under § 52.31(c) and sanctions will be imposed in accordance with the order of sanctions and the terms for such sanctions established in § 52.31.

[60 FR 4737, Jan. 24, 1995]

Subpart B—Alabama

§ 52.50 Identification of plan.

(a) Title of plan: ''Air Quality Implementation Plan for the State of Alabama.''

(b) The plan was officially submitted on January 25, 1972.

(c) The plan revisions listed below were submitted on the dates specified.

(1) Letter informing Governor of Florida of submittal of Alabama Implementation Plan submitted on March 21, 1972, by the Alabama Air Pollution Control Commission.

(2) Compliance schedules submitted on April 18, 1972, by the Alabama Air Pollution Control Commission.

(3) Clarifying comments on the plan submitted on April 28, 1972, by the Alabama Air Pollution Control Commission.

(4) Semi-annual report, miscellaneous non-regulatory additions to the plan, compliance schedules and miscellaneous regulatory additions to Chapters 3, 4, 5 and 9 submitted on February 15, 1973, by the Alabama Air Pollution Control Commission.

(5) Transportation control plans submitted on April 24, 1973, by the Alabama Air Pollution Control Commission.

(6) Miscellaneous non-regulatory additions to the plan submitted on June 29, 1973, by the Alabama Air Pollution Control Commission.

(7) Miscellaneous non-regulatory additions and complex source regulation, Chapter 10, submitted on September 26, 1973, by the Alabama Air Pollution Control Commission.

(8) Plan revisions to Chapter 5 concerning sulfur compound emissions submitted on October 31, 1973, by the Alabama Air Pollution Control Commission.

(9) Revision to Part 4.10, Primary Aluminum Plants, and redefinition of ''Solid Particulate Matter'' in section 1.2.1 submitted on May 27, 1974, by the Alabama Air Pollution Control Commission.

(10) AQMA identifications submitted on June 17, 1974, by the Alabama Air Pollution Control Commission.

(11) Coke oven regulations, Part 4.9 excluding section 4.9.4, submitted on June 20, 1974, by the Alabama Air Pollution Control Commission.

(12) Revised limits on particulate emissions from Portland cement plants, submitted on June 4, 1975, by the Alabama Air Pollution Control Commission.

(13) Revised limits on sulfur dioxide and sulfuric acid mist emissions from sulfuric acid plants, submitted on July 25, 1975, by the Alabama Air Pollution Control Commission.

(14) Revised area classification system for fuel combustion sources of sulfur dioxide and initial classification of Counties, submitted on May 1 and October 9, 1975, respectively, by the Alabama Air Pollution Control Commission.

(15) Revised emergency level for photochemical oxidants (emergency episode control plan) submitted by the Alabama Air Pollution Control Commission on April 23, 1976.

(16) Revised SO_2 emissions from gas processing plants submitted by the Alabama Air Pollution Control Commission on July 21, 1976.

(17) Regulations equivalent to EPA's New Source Performance Standards (40 CFR part 60) and continuous monitoring requirements for existing stationary sources (40 CFR 51.19), submitted by the Alabama Air Pollution Control Commission on October 28, 1976.

(18) Revised regulations for the charging and pushing of coke in existing conventional batteries, submitted by the Alabama Air Pollution Control Commission on July 14, 1978.

(19) Part 4.12, dealing with particulate emissions from xylene oxidation, submitted by the Alabama Air Pollution Control Commission on September 13, 1978.

(20) 1979 implementation plan revisions for nonattainment areas (TSP and ozone), submitted on April 19, 1979, (as clarified by a letter of August 10, 1979), by the Alabama Air Pollution Control Commission.

(21) Revisions in permit regulations as follows: (i) Title of 16.3.2. is changed to ''Permits to Construct in or near Nonattainment Areas;'' (ii) a subparagraph (9), ''Significant Impact,'' is added to paragraph 16.3.2.(b); (iii) paragraph 16.3.2.(c) is revised; and (iv) subparagraph 16.3.2.(d)(5) is deleted; these revisions were adopted on February 13, 1980, and submitted on February 20, 1980, by the Alabama Air Pollution Control Commission to correct deficiencies in the Part D revisions given conditional approval by EPA on November 26, 1979.

(22) 1979 implementation plan revisions for sulfur dioxide nonattainment areas in Colbert, Lauderdale, and Jackson Counties, adopted on August 28, 1979, and submitted on September 6, 1979 by the Alabama Air Pollution Control Commission.

(23) Request for an 18-month extension of the statutory deadline for submitting a plan to attain and maintain the secondary standard for sulfur dioxide in the Jackson County nonattainment area, submitted on September 6, 1979, by the Alabama Air Pollution Control Commission.

(24) Revision to the State Implementation Plan to delete the indirect source regulations submitted by the Alabama Air Pollution Control Commission on December 12, 1978.

(25) Revised emergency episode control plan, updating procedures and raising the alert level for ozone from 0.10

ppm to 0.15 ppm, submitted by the Alabama Air Pollution Control Commission on January 11, 1980.

(26) Revision to the State Implementation Plan for an air quality surveillance network was submitted by the Alabama Air Pollution Control Commission on January 9, 1980.

(27) Alternative compliance schedules for nine sources of volatile organic compounds, submitted by the Alabama Air Pollution Control Commission on July 3, 1980.

(28) Revisions to Chapter 6 of the Alabama Rules and Regulations were submitted by the Alabama Air Pollution Control Commission on April 1, 1981.

(29) Alternative TSP control strategy for 3M Company's Guin plant, submitted on February 4, 1981, by the Alabama Air Pollution Control Commission.

(30) Revisions in Chapters 12 and 13, adopting Federal NSPS and NESHAPS regulations by reference, submitted by the Alabama Air Pollution Control Commission on June 26, 1981.

(31) Alternative compliance schedules for VOC sources, submitted on June 25, 1981, by the Alabama Air Pollution Control Commission.

(32) Regulations providing for prevention of significant deterioration (additions to Chapter 16 of the Alabama regulations), submitted on January 29, 1981, by the Alabama Air Pollution Control Commission.

(33) Alternative particulate control requirements for Kimberly-Clark Corporation's #3 bark boiler, Coosa Pines (revisions in Part 4.8 of the Alabama regulations), submitted by the Alabama Air Pollution Control Commission on February 4 and August 31, 1981.

(34) Request for 18-month extension of the deadline for submitting a plan to attain and maintain the secondary ambient standard for particulate matter in the Etowah County nonattainment area, submitted on May 19, 1981, by the Alabama Air Pollution Control Commission.

(35) Revision for Jackson County secondary sulfur dioxide nonattainment area, submitted on June 9, 1980, by the Alabama Air Pollution Control Commission.

(36) Set II VOC regulations, submitted on February 12, 1982, by the Alabama Air Pollution Control Commission and on May 5, 1983, by the Alabama Department of Environmental Management.

(37) Provisions for new source review in nonattainment areas (changes in Chapter 16 of the regulations), submitted on March 31, 1981, by the Alabama Air Pollution Control Commission.

(38) Bubble for Union Camp Corporation's Prattville, Alabama kraft pulp mill, submitted on January 21, 1983, January 20, 1984, and March 9, 1984, by the Alabama Department of Environmental Management (ADEM).

(i) Incorporation by reference.

(A) Alabama Department of Environmental Management Resolution and Regulation 4.8.4, dealing with control of particulate emissions from wood waste boilers, was adopted on December 9, 1983.

(B) Alabama Environmental Management Commission Resolution and Regulation 4.7.5, dealing with particulate emissions from kraft pulp mills, was adopted on March 7, 1984.

(ii) Other material.

(A) None.

(39) Changes to air permit requirements, submitted on February 19, 1985, and on March 28, 1985, by the Alabama Department of Environmental Management (ADEM).

(i) Incorporation by reference.

(A) Amendment to ADEM Air Rules & Regulations Chapter 16.1, submitted on March 28, 1985, and State-adopted on March 13, 1985. Allows delegation of permitting authority to locals.

(B) Amendment to ADEM Air Rules & Regulations Chapter 16.1, 16.2, 16.3, and 16.4, submitted on February 19, 1985, and State-adopted on February 13, 1985. Consolidates Permit to Construct, Operate and Temporary Permit, into one Air Permit.

(ii) Additional information.

(A) None.

(40) Visibility new source review regulations as visibility monitoring strategy were submitted to EPA on November 20, 1985.

(i) Incorporated by reference.

(A) Letter of November 20, 1985, from the Alabama Department of Environmental Management, and the following regulation Changes to Paragraphs

16.3.2 and 16.4 to Address Visibility Requirements adopted by the Alabama Environmental Management Commission on November 13, 1985:

16.3.2(b)—(Permits to Construct in or Near Nonattainment Areas—Definitions)
16.3.2(f)—(Permits to Construct in or Near Nonattainment Areas—visibility protection provisions)
16.4.2—(Permits to Construct in Clean Air Areas—Definitions)
16.4.12—(Visibility Monitoring)
16.4.15—(Sources Impacting Federal Class I Areas—Additional Requirements)

(ii) Additional material.

(A) Narrative Visibility SIP which includes the State's visibility monitoring strategy.

(41) State implementation plan revisions, submitted by the Department of Environmental Management on May 17, 1985.

(i) Incorporation by reference.

(A) Amendments to Alabama Department of Environmental Management's (ADEM) Air Rules and Regulations: addition of Paragraphs 4.3.5, 4.7.6, 4.7.7, 4.8.3(a), 4.8.3(b), 4.8.3(c), revision of Paragraph 4.8.3, adopted on October 10, 1984.

(B) Resolution by the Alabama Environmental Management Commission adopting the proposed regulations into the ADEM's Air Rules and Regulations on October 10, 1984.

(ii) Other material.

(A) Dispersion modelling of area around Kimberly Clark Corporation's Talledega County facility.

(42) State implementation plan for attainment and maintenance of the lead standards in all areas except Jefferson County, submitted on March 28, 1985, by the Alabama Department of Environmental Management.

(i) Incorporation by reference.

(A) Regulation for existing secondary lead smelters located in Pike County, Alabama (Regulation 4.15.6), which was adopted by the Alabama Department of Environmental Management on March 13, 1985. Under applicable law, EPA approval is required for discretionary actions of the Director of the Alabama Department of Environmental Management that may increase lead concentrations in the ambient air.

(B) Letter of May 6, 1985 from Ababama Department of Environmental Management to EPA, and Regulation pertaining to secondary lead smelter exhaust stack gases (Regulation 4.15.3), which was adopted by the Alabama Air Pollution Control Commission on March 23, 1982.

(ii) Other material.

(A) Narrative SIP, titled, ''State of Alabama'a Plan for the Attainment of the National Ambient Air Quality Standard for Lead,'' dated December 1984.

(43) [Reserved]

(44) Volatile Organic Compound regulation changes were submitted to EPA on September 23, 1985.

(i) Incorporation by reference. (A) Letter of September 23, 1985 to EPA from Alabama Department of Environmental Management and changes to Chapter 6 of the Alabama Air Pollution Control Rules and Regulations (Control of Volatile Organic Compounds) which were adopted by the Alabama Environmental Management Commission on September 18, 1985, specifically, the revisions to 6.1.1(a), 6.1.2, and 6.1.3 and the addition of 6.1.4 and 6.1.5.

(ii) Other material—none.

(45) State implementation plan for attainment and maintenance of lead standards in Jefferson County, submitted on October 7, 1985, by the Alabama Department of Environmental Management, and on November 13, 1986, by the Jefferson County Health Department.

(i) Incorporation by reference.

(A) Jefferson County Department of Health Regulation 611, Secondary Lead Smelters (excluding paragraphs 6.11.2(a) and 6.11.2(b)) which was adopted on September 11, 1985.

(B) November 13, 1986, letter to EPA from the Jefferson County Department of Health, and Appendix C of the Alabama Lead SIP for Jefferson County (Revised Schedule for the RACT-plus study) which was adopted on November 12, 1986.

(ii) Other material.

(A) Narrative SIP, entitled ''State Implementation Plan for the Attainment of the National Ambient Air Quality Standard for Lead in Jefferson County'' dated September 1984.

(46) Stack height regulations were submitted to EPA on September 26, 1986, by the Alabama Department of Environmental Management.

(i) Incorporation by reference.

(A) Letter of September 26, 1986, from the Alabama Department of Environmental Management, transmitting stack height regulations.

(B) Section 16.3.3, Stack Heights, of the Alabama air pollution control rules and regulations, which was adopted on September 18, 1986, by the Alabama Environmental Management Commission.

(ii) Other material—none.

(47) Revisions to Alabama's New Source Review regulations were submitted to EPA on April 17, 1987.

(i) Incorporation by reference.

(A) Letter of April 17, 1987, from the Alabama Department of Environmental Management.

(B) Revisions to Alabama regulation 16.3.2, adopted by the Alabama Department of Environmental Management (ADEM) on April 15, 1987.

(ii) Other material—none.

(48) Revised State Implementation Plan for attainment and maintenance of lead standards in Jefferson County, submitted on August 5, 1988, by the Alabama Department of Environmental Management.

(i) Incorporation by reference. (A) Air permits incorporating revised regulations for existing secondary lead smelters located in Jefferson County, Alabama (Regulation 6.11), adopted by the Jefferson County Board of Health on May 11, 1988.

(B) [Reserved]

(ii) Other material. (A) Narrative SIP, entitled ''State Implementation Plan for the Attainment of the National Ambient Air Quality Standard for Lead in Jefferson County,'' dated February 19, 1988.

(B) [Reserved]

(49) SO_2 revisions for Secondary Lead Smelters, submitted by the Alabama Department of Environmental Management on June 30, 1989.

(i) Incorporation by reference.

(A) The following revisions to Chapter 6 of Jefferson County Board of Health Air Pollution Control Rules and Regulations, which became effective June 14, 1989.

(*1*) 6.11.2(o)

(B) The following revisions to chapter 7 of Jefferson County Board of Health Air Pollution Control Rules and Regulations which became effective June 14, 1989 as follows:

(*1*) 7.5.3 (*3*) 7.5.5
(*2*) 7.5.4 (*4*) 7.5.6

(ii) Additional material. (A) Letter of June 30, 1989, submitted by the Alabama Department of Environmental Management.

(B) Modeling analysis for Interstate Lead Corporation which was submitted by Jefferson County, Alabama on April 5, 1989.

(50) Changes in Alabama's Regulations which were submitted to EPA on May 29, 1987, by the Alabama Department of Health and Environmental Management.

(i) Incorporation by reference.

(A) Changes in Alabama's Regulation which were adopted on May 20, 1987:

(1) Chapter 5, Control of Sulfur Compound Emissions: Section 5.1.1(d) & (e) and Sections 5.3.4 (Applicability), 5.3.4 (a) & (b), 5.3.5 (a) & (b), 5.3.6, 5.3.7, 5.3.8, & 5.3.9.

(ii) Other Material.

(A) Modeling analysis for Exxon Company's Big Escambia Creek Treating Facility and Tennessee Valley Authority's Colbert Steam Plant.

(51) The recodified Air Division Administrative Code Rules of the Alabama Department of Environmental Management submitted on October 31, 1989 as revisions to Alabama's State Implementation Plan. These rules became effective on June 22, 1989.

(i) Incorporation by reference.

(A) Alabama Department of Environmental Management Administrative Code Rules 335–3 and appendices A–F, revision effective June 22, 1989, except for the following rules:

335–3–1–.02(1)—Definitions: (b), (c), (j), (pp), (xx), (yy), (bbb), (ccc), (nnn), (sss), and (yyy).
335–3–2–.02—Episode Criteria: (4)(b); (4)(c), (d) and (e); and (5)(b), (c), (d), and (e); (6)(b), (c), (d), and (e).
335–3–4—Control of Particulate Emissions; .01(1)(a), (b), and (d)(1), (2), (3), (4), and (5); .01(2); and .04(1)(a)
335–3–5–.03—Petroleum Production: (4)
335–3–14—Permits: .03(1)(g)(1)

(ii) Other material—None.

(52) Provisions for PM_{10} submitted on June 29, 1988, and October 3, 1989, by the Alabama Department of Environmental Management.

(i) Incorporation by reference.

(A) The following revisions submitted on June 29, 1988, to Chapters 1, 2 and 16 were effective June 16, 1988. These Chapters were recodified as Chapters 335–3–1, 335–3–2 and 335–3–14, respectively, effective June 22, 1989.

(*1*) Definitions—1.2.1 recodified 335–3–1–.02(1) bbb, eee, nnn, and yyy.

(*2*) Air Pollution Emergency—Chapter 2 recodified as 335–3–2.

(*3*) Permits—Chapter 16 recodified as 335–3–14, except .03(1)(g)(1).

(B) The following revisions submitted on October 3, 1989, to Chapters 35–3–1 and 335–3–14 were effective September 21, 1989.

(*1*) Definitions—335–1–.02 (1) (yy) and (ccc).

(*2*) Permits—335–3–14.

(*i*) 335–3–14–.03(1)(g)(1).

(53) October 8, 1988, and March 15, 1989, revisions to Jefferson County's Implementation Plan for PM_{10} were submitted by the Alabama Department of Environmental Management. The submittal included a committal SIP.

(i) Incorporation by reference.

(A) The following revisions submitted on March 15, 1989, to chapters 1, 2, and 4 of Jefferson County Implementation Plan for PM_{10} were effective February 8, 1989.

Chapter I—Chapter I General Provisions:

1.3 (Definitions):

Soiling Index, PM_{10}, Particulate Matter, PM_{10} emission, Total Suspended Particulate, Citation, Control Device, Employee, Six Minute Average, Violator.

Chapter 2—Permits: 2.3.1(g)(1), (2), and (3); 2.3.2.(b)(11) and 20; 2.3.4 (a)(5); 2.3.2 (2); 2.4.2.(w) (1) and (2); 2.4.3; 2.4.8(h), 2.4.8(k) and (l); 2.4.12(a)(7) and 8; 2.4.15(e); and 2.4.19(a).

Chapter 4—Air Pollution Emergency: 4.3.4(b), (c), (d), and (e); 4.3.5(b), (c), (d), and (e); and 4.3.6(b), (c), (d), and (e).

(ii) Other material.

(A) March 15, 1989, letter from the Alabama Department of Environmental Management.

(54)–(55) [Reserved]

(56) Revisions to the VOC portion of the Alabama SIP were submitted on April 20, 1987, November 7, 1990, May 22, 1991, and October 4, 1991, and July 5, 1991, by the State of Alabama. These revisions were adopted on April 15, 1987; October 10, 1990; November 14, 1990, and May 8, 1991; September 18, 1991, respectively by the Jefferson County Board of Health.

(i) Incorporation by reference.

(A) Jefferson County Department of Health Air Pollution Control Program Rules and Regulations, Chapter 8 (Control of VOC Emissions) and Chapter 1 (Definitions) effective April 8, 1987.

(*1*) Chapter 1—General Provisions: Section 1.3.

(*2*) Chapter 8—Control of Volatile Organic Compound (VOC) Emissions, except for 8.16.13.

(ii) Other material—none.

(57) Revisions to Chapters 335–3–1 and 335–3–6 of the Alabama Department of Environmental Management Administrative Code which were submitted on October 19, 1989, and on July 5, 1991, and adopted into the Alabama Department of Environmental Management Administrative Code on August 16, 1989 and June 26, 1991.

(i) Incorporation by reference.

(A) Amendments to the Alabama regulations 335–3–1–.02, 335–3–6–.02(1); 335–3–6–.03(1); 335–3–6–.24(1); 335–3–6–.26; 335–3–6–.27; 335–3–6–.28; 335–3–6–.29; 335–3–6–.30; 335–3–6–.31; 335–3–6–.32; 335–3–6–.33; 335–3–6–.34; 335–3–6–.35; 335–3–6–.36; 335–3–6–.37 with the exception of Subsection 335–3–6–.37(10)(a); 335–3–6–.38; 335–3–6–.39; 335–3–6–40; 335–3–6–.41; 335–3–6–.42; 335–3–6–43; 335–3–6–44; 335–3–6–45; 335–3–6–.46; 335–3–6–.47; 335–3–6–.49; 335–3–6–.51; 335–3–6–.53 effective July 31, 1991.

(ii) Other material—None.

(58) Revisions to include NO_2 increment requirements in Chapter 2 of the SIP and the PSD regulations, Chapter 335–3–14 of the Alabama Department of Environmental Management Administrative Code which was submitted on October 22, 1990.

(i) *Incorporation by reference.* (A) Revisions to 335–3–14–.04, ''Air Permits Authorizing Construction in Clean Air Areas,'' of the Alabama Department of Enironmental Management Administrative Code, which became effective November 1, 1990.

(ii) *Other material.* (A) Letter dated October 22, 1990, from the Alabama Department of Environmental Management.

(B) Letter dated April 30, 1991, from the Alabama Department of Environmental Management regarding minimum program elements.

(59) [Reserved]

(60) Provisions for visible emissions were submitted by the Alabama Department of Environmental Management on June 11, 1979.

(i) Incorporation by reference.

(A) 335–3–4.01 Visible Emissions, adopted May 17, 1989.

(ii) Other material.

(A) None.

(61) Revisions to the Alabama SIP to correct errors and to add offset ratios which were submitted on November 10, 1992.

(i) Incorporation by reference.

(A) Amendments to the following sections of the Alabama regulations—335–3–6–.04(4), 335–3–14–.03(2)(b)15, 335–3–14–.03(2)(b)17, 335–3–14–.03(2)(b)18, 335–3–14–.03(2)(b)20, 335–3–14–.03(2)(c)2, 335–3–14–.03(2)(e), 335–3–14–.03(2)(g)1(i), 335–3–14–.03(2)(g)1(ii), and Appendix D—were adopted by the State on October 23, 1992.

(ii) Other material.

(A) Letter of November 10, 1992, from the Alabama Department of Environmental Management.

(62) The Alabama Department of Environmental Management has submitted revisions to chapter 11 of the Alabama Statute on November 13, 1992. These revision address the requirements of section 507 of Title V of the CAA and establish the Small Business Stationary Source Technical and Environmental Assistance Program (PROGRAM).

(i) Incorporation by reference.

(A) Alabama statute 11.1, effective November 13, 1993.

(ii) Additional information—None.

(63) Provisions for coke ovens were submitted by the Alabama Department of Environmental Management on September 25, 1985.

(i) Incorporation by reference.

(A) Alabama Department of Environmental Management Administrative Code, Chapter 335–3–4–.17, Steel Mills Located in Etowah County, adopted September 18, 1985.

(ii) Other material.

(A) None.

(64) Revisions to provide synthetic minor operating permit rules submitted by the Alabama Department of Environmental Management on December 20, 1993.

(i) Incorporation by reference.

(A) Alabama Department of Environmental Management Air Division Administrative Code, Chapter 335–3–4–.10, –11, –14, –15, and Appendix D, adopted November 23, 1993.

(ii) Other material. None.

(65) Revisions to the State of Alabama State Implementation Plan (SIP) concerning emission statements were submitted on November 13, 1992, by the Alabama Department of Environmental Management.

(i) *Incorporation by reference.* The Addition of Section 11.2 of the Alabama Regulations was effective on November 13, 1992.

(ii) *Other material.* Letter dated November 13, 1992, from the Alabama Department of Environmental Management.

(66) The Alabama Department of Environmental Management has submitted revisions to Alabama SIP on September 28, 1993. These revisions address the requirements necessary to change the Leeds area of Jefferson County, Alabama, from nonattainment to attainment for lead. The submittal includes the maintenance plan for the Leeds Area.

(i) Incorporation by reference.

(A) Plan for Maintenance of the NAAQS for Lead in the Jefferson County (Leeds) Area after Redesignation to Attainment Status effective on September 28, 1993.

(ii) Additional information. None.

(67) [Reserved]

(68) The State of Alabama submitted a SIP submittal to revise the ADEM Administrative Code for the Air Pollution Control Program on August 14, 1995. These revisions involve changes to Chapter 335–3–14—Air Permits.

(i) Incorporation by reference.

(1) Amendments to the following sections of the Alabama regulations—335–3–14–.04, and 335–3–14–.05 which were adopted on March 21, 1995.

(ii) Other material. None.

(69) The State of Alabama submitted revisions to the ADEM Administrative Code for the Air Pollution Control Program on October 30, 1995, and December 14, 1995. These revisions involve changes to Chapter 335–3–1—General Provisions.

(i) Incorporation by reference. Section 335–3–1–.02 (gggg) of the Alabama regulations adopted on November 28, 1995.

(ii) Other material. None.

[37 FR 10846, May 31, 1972]

EDITORIAL NOTE: For FEDERAL REGISTER citations affecting §52.50, see the List of CFR Sections Affected in the Finding Aids section of this volume.

§52.51 Classification of regions.

The Alabama plan was evaluated on the basis of the following classifications:

Air quality control region	Pollutant				
	Particulate matter	Sulfur oxides	Nitrogen dioxide	Carbon monoxide	Photochemical oxidants (hydrocarbons)
Alabama & Tombigbee Rivers Intrastate	II	III	III	III	III
Columbus (Georgia)-Phenix City (Alabama) Interstate	I	III	III	III	III
East Alabama Intrastate	I	III	III	III	III
Metropolitan Birmingham Intrastate	I	II	III	I	I
Mobile (Alabama)-Pensacola-Panama City (Florida)-Southern Mississippi Interstate	I	I	III	III	I
Southeast Alabama Intrastate	II	III	III	III	III
Tennessee River Valley (Alabama)-Cumberland Mountains (Tennessee) Interstate	I	I	III	III	III

[37 FR 10847, May 31, 1972]

§52.53 Approval status.

With the exceptions set forth in this subpart, the Administrator approves Alabama's plans for the attainment and maintenance of the national standards under section 110 of the Clean Air Act. Furthermore, the Administrator finds the plans satisfy all requirements of Part D, Title I, of the Clean Air Act as amended in 1977. In addition, continued satisfaction of the requirements of Part D for the ozone portion of the SIP depends on the adoption and submittal of RACT requirements by July 1, 1980 for the sources covered by CTGs issued between January 1978 and January 1979 and adoption and submittal by each subsequent January of additional RACT requirements for sources covered by CTGs issued by the previous January.

[45 FR 37431, June 3, 1980]

§52.56 Review of new sources and modifications.

Part D conditional approval. The plan's provisions for review of new sources and modifications in nonattainment areas are approved on condition that the State submit any necessary corrections by March 9, 1984 and, during the interim, implement these regulations in a manner consistent with EPA requirements.

[48 FR 9860, Mar. 9, 1983]

§52.57 Control strategy: Sulfur oxides.

(a) The requirements of Subpart G of this chapter are not met since the Alabama plan does not provide for attainment and maintenance of the national standards for sulfur oxides in the vicinity of the Widows Creek Power Plant in Jackson County, Alabama. Therefore, Part 5.1, Fuel Combustion, of Chapter 5, Control of Sulfur Compound Emissions, of the rules and regulations of the State of Alabama, as adopted by the Alabama Air Pollution Control Commission on May 29, 1973, and amended on March 25, 1975, which is part of the revised sulfur oxide control strategy, is disapproved as it applies to the Widows Creek Plant. Part 5.1 of the Alabama rules and regulations as adopted on January 18, 1972, remains the implementation plan regulation applicable to that source.

[41 FR 42674, Sept. 28, 1976, as amended at 51 FR 40676, Nov. 7, 1986]

§ 52.58 Control strategy: Lead.

The lead plan submitted by the State on March 24, 1982, is disapproved because it fails to provide for the attainment of the lead standard throughout Alabama. The lead plan submitted by the State on October 7, 1985, and November 13, 1986, for Jefferson County is conditionally approved on the condition that the State by October 1, 1987, determine what additional control measures may be necessary, if any, to assure attainment and maintenance as expeditiously as practicable but no later than the applicable attainment deadline and submit those measures to EPA for approval, together with an appropriate demonstration of attainment. The provisions in the regulation submitted on October 7, 1985, that give the Jefferson County Health Officer discretion to vary the requirements of the regulation are approved as limits on that discretion, but any variances that may result from those provisions are not approved in advance and hence change the applicable implementation plan only when approved by EPA on a case-by-case basis.

[49 FR 18738, May 2, 1984, as amended at 52 FR 4291, Feb. 11, 1987]

§ 52.60 Significant deterioration of air quality.

(a) All applications and other information required pursuant to § 52.21 from sources located in the State of Alabama shall be submitted to the Division of Air Pollution Control, Alabama Air Pollution Control Commission, 645 South McDonough Street, Montgomery, Alabama 36103, rather than to EPA's Region IV Office.

(b) On March 24, 1987, the Alabama Department of Environmental Management submitted a letter committing the State of Alabama to require that modeling for PSD permits be done only in accordance with the ''Guideline on Air Quality Models (Revised)'' or other models approved by EPA.

[42 FR 22869, May 5, 1977, as amended at 46 FR 55518, Nov. 10, 1981; 52 FR 48812, Dec. 28, 1987]

§ 52.61 Visibility protection.

(a) The requirements of section 169A of the Clean Air Act are not met because the plan does not include approvable procedures for protection of visibility in mandatory Class I Federal areas.

(b) *Long-term strategy*. The provisions of § 52.29 are hereby incorporated into the applicable plan for the State of Alabama.

[52 FR 45138, Nov. 24, 1987]

§ 52.62 Control strategy: sulfur oxides and particulate matter.

In a letter dated May 29, 1987, the Alabama Department of Health and Environmental Control certified that no emission limits in the State's plan are based on dispersion techniques not permitted by EPA's stack height rules. The certification does not apply to: Alabama Electric Cooperative—Lowman Steam Plant; Alabama Power Company-Gorgas Steam Plant, Gaston Steam Plant, Greene County Steam Plant, Gadsden Steam Plant, Miller Steam Plant, and Barry Steam Plant; Alabama River Pulp; Champion International Corporation; Container Corporation of America; Exxon Company's Big Escambia Creek Treating Facility; General Electric's Burkville Plant; International Paper; Scott Paper Company; Tennessee Valley Authority's Colbert, and Widows Creek Steam Plant; Union Camp Corporation; and U.S. Steel.

[55 FR 5846, Feb. 20, 1990]

§ 52.63 PM_{10} State Implementation Plan development in group II areas.

On March 15, 1989, the State submitted a committal SIP for the cities of Leeds and North Birmingham in Jefferson County. The committal SIP contains all the requirements identified in the July 1, 1987, promulgation of the SIP requirements for PM_{10} at 52 FR 24681. The SIP commits the State to submit an emissions inventory, continue to monitor for PM_{10}, report data and to submit a full SIP if a violation of the PM_{10} and National Ambient Air Quality Standards is detected.

[56 FR 32514, July 17, 1991]

§52.64 [Reserved]

§52.65 Control Strategy: Nitrogen Oxides.

On October 22, 1990, the Alabama Department of Environmental Management submitted a revision to Chapter 2, Control Strategy, by adding subsection 4.2.3. This revision addressed the strategy Alabama is using to implement provisions of the Prevention of Significant Deterioration regulations for nitrogen oxides.

[57 FR 24370, June 9, 1992]

Subpart C—Alaska

§52.70 Identification of plan.

(a) Title of plan: ''State of Alaska Air Quality Control Plan.''

(b) The plan was officially submitted on April 25, 1972.

(c) The plan revisions listed below were submitted on the dates specified.

(1) Modifications to the implementation plan including a revision to Title 18, Chapter 50, section 160 and other nonregulatory provisions submitted on June 22, 1972, by the Governor.

(2) Compliance schedules submitted on August 2, 1973, by the State of Alaska Department of Environmental Conservation.

(3) Compliance schedules submitted on August 23, 1973, by the State of Alaska Department of Environmental Conservation.

(4) Compliance schedules submitted on September 30, 1975, by the State of Alaska Department of Environmental Conservation.

(5) Compliance schedules submitted on January 6, 1976, by the State of Alaska Department of Environmental Conservation.

(6) Compliance schedules submitted on September 30, 1975, by the State of Alaska Department of Environmental Conservation.

(7) Part D attainment plans for the Anchorage and Fairbanks carbon monoxide nonattainment areas submitted by the Governor of Alaska on January 18, 1980 as follows:

VOLUME II. ANALYSIS OF PROBLEMS, CONTROL ACTIONS

Section III. *Areawide Pollutant Control Efforts,* Subsection A.
Carbon Monoxide, except subparts 1.c (Other areas) and 5.h (Fairbanks Emergency Avoidance Plan)

VOLUME III. APPENDICES

III–1 A Review of Carbon Monoxide Emissions from Motor Vehicles during Cold Temperature Operation
III–2 Cold Weather Related Strategy Support Development
III–3 Preliminary Assessment of Meteorological Conditions during Days of Ambient Air Quality Violations in Anchorage
III–4 Summary of the 1978 Fairbanks Voluntary Vehicle Emissions Inspection Program
III–5 Approach of Evaluating an Alaska I/M Program
III–6 Appendices to the Anchorage Air Quality Plan
III–7 Appendices to the Fairbanks Air Quality Plan

(8) On January 18, 1980, the State of Alaska Department of Environmental Conservation submitted a plan revision to meet the requirements of Air Quality Monitoring, 40 CFR part 58, subpart C, §58.20, as follows:

VOLUME II. ANALYSIS OF PROBLEMS, CONTROL ACTIONS

Section V. *Ambient Air Monitoring*
A. Purpose
C. Air Monitoring Network
E. Annual Review

(9) Provisions of a State Air Quality Control Plan submitted by the Governor of Alaska on January 18, 1980, as follows:

VOLUME II. ANALYSIS OF PROBLEMS, CONTROL ACTIONS

Section I. *Introduction*
A. Summary
B. Air Quality Control Regions
C. Attainment/Nonattainment Designations
Section II. *Alaskan Air Quality Control Programs*
A. State Program
B. Local Programs
C. Resource Needs
Section III. *Areawide Pollutant Control Efforts*
A. Carbon Monoxide, Subpart 1.c (Other areas)
B. Total Suspended Particulate Matter
C. Ice Fog
D. Open Burning—Forest Practices
Section IV. *Point Source Control Efforts*
A. Summary
B. Description of Source Categories and Pollutants
C. Summary of Major Emitting Sources

D. History of Alaskan Point Source Program
F. Local Program Enforcement
G. New Source Review and Approval
H. Compliance Assurance
I. State Air Quality Control Regulations
Section V. *Ambient Air Monitoring*
B. Description of Previous Air Monitoring Network

VOLUME III. APPENDICES

I–1 Summary of Public Hearings, Written Testimony, etc.
I–2 Recommendations for attainment/Nonattainment designations
II–1 Alaska Statutes, except section 46.03.170
II–2 Regulations of the Fairbanks North Star Borough, except section 8.04.070
II–3 Fairbanks North Star Borough/Alaska Department of Environmental Conservation Agreement
II–4 Municipality of Anchorage/Alaska Department of Environmental Conservation Agreement
II–5 Alaska State Department of Law Legal Opinion
IV–1 Summaries of Emission Inventories
IV–2 D. Permit to Operate for the Fairbanks Municipal Utilities System
IV–3 Testing Procedures
V–1 Air Quality Data

An amended Appendix II–5, ''Alaska State Department of Law Legal Opinion'' submitted by the State of Alaska Department of Environmental Conservation on February 29, 1980. Amendments to the January 18, 1980 submittal, submitted by the State of Alaska Department of Environmental Conservation on September 29, 1982 as follows:

VOLUME II. ANALYSIS OF PROBLEMS, CONTROL ACTIONS

Section I. *Introduction*
C. Attainment/Nonattainment Designations
Section III. *Areawide Pollutant Control Efforts*
D. Open Burning—Forest Practices
Section IV. *Point Source Control Efforts*
C. Summary of Major Emitting Sources
D. History of Alaskan Point Source Program
F. Local Program Enforcement
G. New Source Review and Approval
H. Compliance Assurance
I. State Air Quality Control Regulations
Section V. *Ambient Air Monitoring*
C. Air Monitoring Network
E. Annual Review

VOLUME III. APPENDICES

IV–4 ADEC Ambient Analysis Procedures

(10) On November 15, 1983 the State of Alaska Department of Environmental Conservation submitted a revision to add a lead strategy to the Alaska Implementation Plan.

(11) Provisions of a State Air Quality Control Plan submitted by the Alaska Department of Environmental Conservation on November 15, 1983, as follows:

VOLUME II. ANALYSIS OF PROBLEMS, CONTROL ACTIONS

Section I. *BACKGROUND*

A. INTRODUCTION
B. AIR QUALITY CONTROL REGIONS
C. ATTAINMENT/NONATTAINMENT DESIGNATIONS
D. PREVENTION OF SIGNIFICANT DETERIORATION DESIGNATIONS

Section II. *STATE AIR QUALITY CONTROL PROGRAM*

Section III. *AREAWIDE POLLUTANT CONTROL PROGRAM*

D. TOTAL SUSPENDED PARTICULATE MATTER
E. ICE FOG
F. OPEN BURNING
G. WOOD SMOKE POLLUTION CONTROL

Section IV. *POINT SOURCE CONTROL PROGRAM*

A. SUMMARY
1. Annual Review Report
B. STATE AIR QUALITY REGULATIONS
C. LOCAL PROGRAMS
D. DESCRIPTION OF SOURCE CATEGORIES AND POLLUTANTS
1. Typical Point Sources
2. Summary of Major Emitting Facilities
E. POINT SOURCE CONTROL
1. Introduction
F. FACILITY REVIEW PROCEDURES
1. Who needs a permit?
2. Standard Application Procedures
3. PSD Application Procedures, Preliminary report and meeting, Pre-construction monitoring, PSD application format
4. Nonattainment Application Procedures
G. APPLICATION REVIEW AND PERMIT DEVELOPMENT
1. Application Review
2. Permit Development Requirement, Monitoring and Testing Requirements, Ambient Monitoring, Continuous Emissions Monitoring, Source Testing
3. Prevention of Significant Deterioration Review, Basis of Program, PSD Regulations, PSD Analysis Procedure
4. Nonattainment Area Review
5. New Source Performance Standards Source Review

6. Visibility Review
7. Sources under EPA Review
H. PERMIT ISSUANCE REQUIREMENTS

Section V. *AMBIENT AIR MONITORING*

A. PURPOSE
B. COMPLETED AIR MONITORING PROJECTS
1. Carbon Monoxide
2. Nitrogen Oxides
3. Sulfur Dioxide
4. Ozone
5. Total Suspended Particulates (TSP)
6. Lead
C. AIR MONITORING NETWORK
1. Network Description
2. Station Designations
3. Air Quality Monitoring Procedures
4. Ambient Sampling for Specific Pollutants
E. ANNUAL REVIEW

VOLUME III. APPENDICES

Section II. *STATE AIR QUALITY CONTROL PROGRAM*

II.A. State Air Statutes, except section 46.03.170, State Attorney General Opinions on Legal Authority
II.B. Municipality of Anchorage/Cook Inlet/ADEC Agreements
II.C. Fairbanks North Star Borough Ordinances/FNSB & ADEC Agreements

Section III. *AREAWIDE POLLUTANT CONTROL PROGRAM*

III.G. Ordinance of the City and Borough of Juneau

Section IV. *POINT SOURCE CONTROL PROGRAM*

IV.1. PSD Area Classification and Reclassifications
A. Class I Area Boundaries
B. Areas Protected from Visibility Degradation
C. Reclassification
1. Limitations on PSD Reclassification
2. PSD Reclassification Procedures
IV.2. Compliance Assurance
IV.3. Testing Procedures

Section V. *AMBIENT AIR MONITORING*

ADEC Ambient Analysis Procedures
TITLE 18. ENVIRONMENTAL CONSERVATION, *CHAPTER 50. AIR QUALITY CONTROL,* Sections 021(d), 030(g), 040(a)(2), 040(c), 050(a)(2), 050(b)(4), 085, 300(a)(1), 300(a)(7), 400(d)(6), 500(d), 500(e), 510 (Editor's Note), 520(a), 520(b), 610(a), 620, 900(15), 900(39), 900(47), and 900(48).

(12) On September 29, 1982, the Commissioner of the Alaska Department of Environmental Conservation submitted a carbon monoxide attainment plan for the cities of Anchorage (section III.B) and Fairbanks (section III.C) as a revision to the Alaska State Implementation Plan. On November 15, 1983, a revision to this plan was submitted for the city of Anchorage. Supplement to the Anchorage and Fairbanks plans revisions to section III.A (Areawide Pollutant Control Program, Statewide Transportation Control Program) and a new State Regulation 18 AAC Chapter 52 (Emissions Inspection and Maintenance Requirements for Motor Vehicles) were submitted on May 31, 1985.

(i) Incorporation by reference.

(A) May 31, 1985 letter from the State of Alaska to EPA, and State Regulation 18 AAC 52 (Emissions Inspection and Maintenance Requirements for Motor Vehicles) as filed by the Commissioner for the State of Alaska on May 19, 1985.

(B) Page section III.B.8–3 of the Anchorage Transportation Control Program, Alaska Air Quality Control Plan, revised June 1, 1985 (emissions and air quality projections for Anchorage with vehicle inspection and maintenance program).

(C) Table C.6.a of the Fairbanks Transportation Control Program, Alaska Air Quality Control Plan [reasonable further progress required reductions for Fairbanks] (page section III.C.6–2) revised November 20, 1982.

(ii) Other material.

(A) Section III.A Statewide Transportation Control Program.

(B) Section III.B Anchorage Transportation Control Program.

(C) Section III.C Fairbanks Transportation Control Program.

(D) The I/M Program Design for the Fairbanks North Star Borough dated October 25, 1984.

(E) The I/M Program Design for the Municipality of Anchorage dated 1984.

(13) On June 26, 1987, the State of Alaska Department of Environmental Conservation submitted Section III.B.10–1 through III.B.10–6 (Anchorage Air Pollution Episode Curtailment Actions); Section III.C.10–1 through III.C.10–9 (Fairbanks Emergency Episode Prevention Plan); and minor modifications to Section III.C.5–7 (Fairbanks Inspection and Maintenance Program Design).

(i) Incorporation by Reference.

(A) June 26, 1987 letter from the State of Alaska Department of Environmental Conservation to EPA Region 10.

(B) Section III.B.10–1 through III.B.10–6 of Volume II (Anchorage Air Pollution Episode Curtailment Actions) as adopted as an ordinance by the Anchorage Assembly on September 9, 1986.

(C) Section III.C.10–1 through III.C.10–9 of Volume II (Fairbanks Emergency Episode Prevention Plan) as adopted as an ordinance by the Assembly of the Fairbanks North Star Borough on December 19, 1985.

(D) Page number Section III.C.5–7 of Volume II (Fairbanks Inspection and Maintenance Design). This new page supercedes the current page number Section III.C.5–7 of the Alaska Air Quality Control Plan as adopted by the Alaska Department of Environmental Conservation on June 26, 1987.

(14) On June 26, 1987, the Commissioner of the Alaska Department of Environmental Conservation submitted revised rules regulating the height of stacks and the use of dispersion techniques, specifically revisions to 18 AAC 50.400(a), 18 AAC 50.530(c), 18 AAC 50.900(16), 18 AAC 50.900(20), 18 AAC 50.900(23), and 18 AAC 50.900.(29), and the deletion of 18 AAC 50.900(17).

(i) Incorporation by Reference.

(A) June 26, 1987 letter from the State of Alaska Department of Environmental Conservation to EPA, Region 10.

(B) August 11, 1987 letter from the State of Alaska Department of Environmental Conservation to EPA, Region 10.

(C) 18 AAC 50.400(a) and 18 AAC 50.900 (16), (20), (23), and (29) as adopted by the State of Alaska Department of Environmental Conservation on December 31, 1986.

(15) On September 12, 1988, the State of Alaska Department of Environmental Conservation submitted revisions to AAC 18 Chapter 52 (Emission Inspection and Maintenance Requirements for Motor Vehicles). Those sections amended through June 2, 1988, are: 18 AAC 51.010 [Purpose and General Requirements] (a)(3), (b), (d), (e), and (g); 18 AAC 52.020 [Vehicles Subject to this Chapter] (1); 18 AAC 52.070 [Waivers] (5)(A) through (C); and 18 AAC 52.900 [Definitions] (14).

(i) Incorporation By Reference.

(A) September 12, 1988 letter from the State of Alaska Department of Environmental Conservation to EPA Region 10.

(B) Chapter 52 [Emissions Inspection and Maintenance Requirements for Motor Vehicles] section 52.010 [Purpose and General Requirements (a)(3), (b), (d), (e), and (g); section 52.020 [Vehicles Subject to This Chapter] (1); section 52.070 [Waivers] (5)(A) through (C); and section 52.900 [Definitions] (14) as adopted by the State of Alaska Department of Environmental Conservation on March 10, 1988.

(16) On September 12, 1988, the State of Alaska Department of Environmental Conservation submitted revisions to the State of Alaska state implementation plan. Specifically pages IV.F.1–1 through IV.F.1–8 of section IV.F ''Project Review Procedures'' and amendments to title 18, chapter 50, sections 050(a)(4), 050(b), 050(d)(1), 300(a)(5)(C), 300(a)(6)(C), 300(a)(7), 300(c), 300(g), 500(d), 510(a), 520(a), 520(b), and 620 of the Alaska Administrative Code.

(i) *Incorporation By Reference.* (A) September 12, 1988, letter from the State of Alaska Department of Environmental Conservation to EPA Region 10 submitting a revision to the Alaska state implementation plan.

(B) Vol. II, Analysis of Problems, Control Actions, Pages IV.F.1–1 through IV.F.1–8 of section IV.F, ''Project Review Procedures,'' revised June 2, 1988.

(C) Title 18, chapter 50, (Air Quality Control) section 050 (Industrial Processes and Fuel Burning Equipment) (a)(4), 050(b), 050(d)(1), 300 (Permit to Operate) (a)(5)(C), 300(a)(6)(C), 300(a)(7), 300(c), 300(g), 500 (Source Testing) (d), 510 (Ambient Analysis Methods) (a), 520 (Emission and Ambient Monitoring) 520(a), 520(b), and 620 (Air Quality Control Plan) of the Alaska Administrative Code as adopted by the State of Alaska Department of Environmental Conservation on March 10, 1988 and effective on June 2, 1988.

(17) On October 17, 1991, the State of Alaska Department of Environmental

Conservation submitted a PM_{10} nonattainment area state implementation plan for Eagle River, Alaska.

(i) Incorporation by reference.

(A) October 15, 1991 letter from Alaska Department of Environmental Conservation to EPA Region 10 submitting the PM_{10} nonattainment area state implementation plan for Eagle River, Alaska.

(B) The PM_{10} nonattainment area state implementation plan for Eagle River, Alaska, as adopted by the Anchorage Assembly on February 6, 1990 and effective on September 24, 1991.

(18) On June 22, 1993, the Governor of the State of Alaska submitted revised rules to satisfy certain Federal Clean Air Act requirements for an approvable moderate PM_{10} nonattainment area SIP for Mendenhall Valley, Alaska. Also included in this SIP were PM_{10} contingency measures for the Mendenhall Valley. On January 21, 1992, a supplement to the existing Eagle River PM_{10} control plan was submitted by ADEC to EPA and certified on March 8, 1993, by the Lieutenant Governor of Alaska.

(i) Incorporation by reference.

(A) June 22, 1993, letter from the Governor of the State of Alaska to EPA, Region 10, submitting the moderate PM_{10} nonattainment area SIP for Mendenhall Valley, Alaska.

(B) The Control Plan for Mendenhall Valley of Juneau, effective July 8, 1993.

(C) August 25, 1993, letter from ADEC showing, through enclosures, the permanent filing record for the supplement to the existing Eagle River PM_{10} control plan. The Lieutenant Governor certified the supplement on March 8, 1993.

(D) The January 21, 1992, supplement to the existing Eagle River PM_{10} control plan, effective April 7, 1993. Also included is an August 27, 1991 Municipality of Anchorage memorandum listing the 1991 capital improvement project priorities and an October 11, 1991, Muncipality of Anchorage memorandum summarizing the supplement to the existing PM_{10} control plan.

(19) The Environmental Protection Agency (EPA) takes action on and/or approves regulations from three submittals received from the ADEC on July 17, 1990, October 15, 1991 and on March 24, 1994, which pertain to correcting SIP deficiencies in the CFR; amendments to regulations dealing with Air Quality Control, 18 AAC 50, for inclusion into Alaska's SIP; and additional amendments to 18 AAC 50, Air Quality Control, for inclusion into Alaska's SIP to assure compliance with new source review permitting requirements for sources located in nonattainment areas for either carbon monoxide or particulate matter.

(i) Incorporation by reference.

(A) July 17, 1990 letter from ADEC to EPA requesting correction for findings of SIP deficiency in 40 CFR Part 52, and including the version of Alaska Statutes, ''Title 46. Water, Air, Energy, and Environmental Conservation,'' in effect at the time of the July 17, 1990 letter, of which Sections 46.03.020, 46.03.030, 46.03.032, and 46.03.715, amended in 1987, were the most recently amended of the enclosed statutes.

(B) October 15, 1991 letter from ADEC to EPA, and including amendments to regulations and the State Air Quality Control Plan to assure compliance with national ambient air quality standards for particulate matter; the Order Amending Regulations of the Department of Environmental Conservation, effective July 21, 1991; and the following *Alaska Administrative Code, 18 AAC 50, Air Quality Control Regulations:* (50.020; 50.085; 50.100; 50.300; 50.400; 50.510, 50.520, 50.610, and 50.900), effective July 21, 1991, Register 119.

(C) March 24, 1994 letter from Walter J. Hickel, Governor of Alaska, to Chuck Clarke, Regional Administrator of EPA, and including amendments to 18 AAC 50, State Air Quality Control Plan; the Order Adopting and Amending Regulations of the Department of Environmental Conservation, effective April 23, 1994, Register 130; and the amendments to 18 AAC 50 (50.021, 50.300(a)(7) and (a)(8), 50.300 (d), (e), and (g), 50.400(a)(1)(A), 50.400(c)(3)(B)(ii), 50.400(c)(4), 50.400(d)(4), and 50.620), State Air Quality Control Plan, found in Volume III: Appendices, Modifications to Section III.A, effective April 23, 1994, Register 130.

(20) On April 18, 1994, the Commissioner of the Alaska Department of Environmental Conservation (ADEC) submitted ''The Alaska Air Quality Small

Business Assistance Program State Air Quality Control Plan Amendment,'' adopted April 8, 1994, as a revision to the Alaska SIP.

(i) Incorporation by reference.

(A) Letter dated April 8, 1994, from the Commissioner of ADEC to the Regional Administrator of EPA, submitting ''The Alaska Air Quality Small Business Assistance Program State Air Quality Control Plan Amendment'' to EPA; the Alaska Air Quality Small Business Assistance Program State Air Quality Control Plan Amendment (which includes Appendix A the Alaska Statutes Title 46, Chapter 14, Article 3), dated April 1994, and adopted April 8, 1994.

(ii) Additional information.

(A) Letter dated July 24, 1995, from Alaska Department of Environmental Conservation, submitting information necessary for approval of the SBAP revision to EPA; the July 1995 SBAP Update, Responses to EPA Comments, and the Air Quality/Small Business Assistance Compliance Advisory Panel Board Information.

(21) On July 11, 1994 ADEC submitted a SIP revision for a basic motor vehicle inspection and maintenance (I/M) program in the Municipality of Anchorage (MOA) and the Fairbanks North Star Borough (FNSB).

(i) Incorporation by reference.

(A) July 11, 1994 letter from the Governor of Alaska to the Regional Administrator of EPA submitting Alaska's amendments to the Air Quality Control Plan and to 18 AAC 52, Emissions Inspection and Maintenance Requirements for Motor Vehicles; the amendments to 18 AAC 52 (52.005, .015, .020, .030, .035, .040, .045, .050, .055, .060, .065, .070, .075, .080, .085, .090, .095, .100, .105, .400, .405, .410, .415, .420, .425, .430, .440, .445, .500, .505, .510, .515, .520, .525, .527, .530, .535, .540, .545, .550, and .990), effective February 1, 1994; and the State Air Quality Control Plan, Vol. II: Analysis of Problems, Control Actions, Modifications to Section I, June 9, 1994; Vol. II: Analysis of Problems, Control Actions, Modifications to Section I, II, III and V, adopted January 10, 1994; Vol. III: Appendices, Modifications to Section III.A, June 9, 1994; Vol. III: Appendices, Modifications to Section III.B, June 9, 1994; and Vol. III: Appendices, Modifications to Section III.C, June 9, 1994.

(22) On March 24, 1994, ADEC submitted a revision to its SIP for the State of Alaska addressing the attainment and maintenance of the National Ambient Air Quality Standards for carbon monoxide in the Anchorage carbon monoxide nonattainment area.

(i) Incorporation by reference.

(A) March 24, 1994 letter from Alaska Governor Walter Hickel to EPA Regional Administrator Chuck Clarke including as a revision to the SIP the State of Alaska, Department of Environmental Conservation, 18 AAC 53, ''Fuel Requirements for Motor Vehicles,'' (Article 1, 18 AAC 53.005—18 AAC 53.190 and Article 9, 18 AAC 53.990) with amendments adopted through March 19, 1994.

(23) On March 24, 1994, ADEC submitted a SIP revision to EPA to satisfy the requirements of sections 187(a)(2)(A) and 187(a)(3) of the CAA, forecasting and tracking VMT in the Anchorage area.

(i) Incorporation by reference.

(A) March 24, 1994 letter from the Alaska Governor to the EPA Regional Administrator including as a revision to the SIP the VMT requirement in the Anchorage area, contained in ADEC's State Air Quality Control Plan, Volume III: Appendices, Modifications to Section III.B.6, III.B.8, III.B.10 and III.B.11, adopted January 10, 1994; and further description on pages 10–14, 57–60 and 69–75 contained in ADEC's State Air Quality Control Plan, Volume III: Appendices, Modifications to Section III.B, III.B.1, and III.B.3, adopted January 10, 1994.

(24) On December 5, 1994 the Alaska Department of Environmental Conservation sent EPA revisions for inclusion into Alaska's SIP that address transportation and general conformity regulations as required by EPA under the CAA.

(i) Incorporation by reference.

(A) December 5, 1994 letter from the Governor of Alaska to EPA, Region 10, submitting amendments addressing transportation and general conformity revisions to the SIP:

(*1*) Regulations to 18 AAC 50, Air Quality Control, including Article 5, Procedure and Administration, 18 AAC

620; Article 6, Reserved; Article 7, Conformity, 18 AAC 50.700–18 AAC 50.735; Article 8, Reserved; and Article 9, General Provisions, 18 AAC 50.900, all of which contain final edits (23 pages total) by the Alaska Department of Law, were filed by the Lieutenant Governor on December 5, 1994 and effective on January 4, 1995.

(*2*) Amendments to the Alaska State Air Quality Control Plan, ''Volume II: Analysis of Problems, Control Actions,'' as revised on December 1, 1994, adopted by reference in 18 AAC 50.620, containing final edits by the Alaska Department of Law, all of which were certified by the Commissioner of Alaska to be the correct plan amendments, filed by the Alaska Lieutenant Governor on December 5, 1994 and effective on January 4, 1995.

(25) On March 24, 1994, ADEC submitted a revision to its SIP for the State of Alaska addressing the attainment and maintenance of the NAAQS for CO in the Anchorage CO nonattainment area.

(i) Incorporation by reference.

(A) March 24, 1994 letter from the Alaska Governor to the EPA Regional Administrator including as a revision to the SIP the State of Alaska, Department of Environmental Conservation, 18 AAC 53, ''Fuel Requirements for Motor Vehicles,'' (Article 1, 18 AAC 53.005—18 AAC 53.190 and Article 9, 18 AAC 53.990, with the exception of 18 AAC 53.010(c)(2)), filed March 24, 1994 and effective on April 23, 1994.

(26) Submittal to EPA from the ADEC of CO contingency measure for Fairbanks, AK.

(i) Incorporation by reference.

(A) Letter dated July 12, 1995 from the Commissioner of the ADEC to the EPA Regional Administrator submitting its repair technician and certification program element found in State regulation 18 AAC 52.400–410, effective June 24, 1994.

[37 FR 10848, May 31, 1972]

EDITORIAL NOTE: For FEDERAL REGISTER citations affecting §52.70, see the List of CFR Sections Affected in the Finding Aids section of this volume.

§52.71 Classification of regions.

The Alaska plan was evaluated on the basis of the following classifications:

Air quality control Region	Pollutant				
	Particulate matter	Sulfur oxides	Nitrogen dioxide	Carbon monoxide	Ozone
Cook Inlet Intrastate	I	III	III	I	III.
Northern Alaska Intrastate	I	III	III	I	III.
South Central Alaska Intrastate	III	III	III	III	III.
Southeastern Alaska Intrastate	III	III	III	III	III.

[37 FR 10848, May 31, 1972, as amended at 48 FR 30625, July 5, 1983]

§52.72 Approval status.

With the exceptions set forth in this subpart, the Administrator approves Alaska's plan for the attainment and maintenance of the national standards. The State included in the plan a regulation prohibiting idling of unattended motor vehicles. However, the plan stated that this regulation was included for informational purposes only, and was not to be considered part of the control strategy to implement the national standards for carbon monoxide. Accordingly, this regulation is not considered a partof the applicable plan.

[37 FR 15080, July 27, 1972]

§§52.73–52.74 [Reserved]

§52.75 Contents of the approved state-submitted implementation plan.

The following sections of the State Air Quality Control Plan (as amended on the dates indicated) have been approved and are part of the current State Implementation Plan:

VOLUME II: ANALYSIS OF PROBLEMS, CONTROL ACTION

Section I *Background*

A. Introduction (7/1/82)
B. Air Quality Control Regions (7/1/82)
C. Attainment/ Nonattainment Designations (7/1/83)

Section II *State Air Quality Control Program* (11/1/83)

Section III *Areawide Pollutant Control Program*

A. Statewide Transportation Control Program (6/1/85)
B. Anchorage Transportation Control Program (6/1/85), except B.10.1 through 10.6 Anchorage Air Pollution Curtailment Actions (6/26/87)
C. Fairbanks Transportation Control Program (6/1/85), except C.10.1 through 10.9 Fairbanks Emergency Episode Prevention Plan (6/26/87)
D. Total Suspended Particulate Matter (7/1/82)
E. Ice Fog (7/1/82)
F. Open Burning (10/30/83)
G. Wood Smoke Pollution Control (7/1/83)
H. Lead Pollution Control (7/1/83)

Section IV *Point Source Control Program*

A. Summary (10/30/83)
1. Annual Review Report (10/30/83)
B. State Air Quality Regulations (10/30/83)
C. Local Programs (10/30/83)
D. Description of Source Categories And Pollutants
1. Typical Point Sources (10/30/83)
2. Summary of Major Emitting Facilities (10/30/83)
E. Point Source Control 1. Introduction (10/30/83)
F. Facility Review Procedures
1. Project Review Procedures (6/02/88) Who needs a permit? (10/30/83, 6/02/88)
2. Standard Application Procedures (10/30/83)
3. PSD Application Procedures (10/30/83)
Preliminary report and meeting (10/30/83)
Pre-construction monitoring (10/30/83) PSD application format (10/30/83)
4. Nonattainment Application Procedures (10/30/83)
G. Application Review and Permit Development (10/30/83)
1. Application Review (10/30/83)
2. Permit Development Requirements (10/30/83)
Monitoring and Testing Requirements (10/30/83)
Ambient Monitoring (10/30/83)
Continuous Emissions Monitoring (10/30/83)
Source Testing (10/30/83)
3. Prevention of Significant Deterioration Review (10/30/83)
Basis of Program (10/30/83)
PSD Regulations (10/30/83)
PSD Analysis (10/30/83)
4. Nonattainment Area Review (10/30/83)
5. New Source Performance Standards Source Review (10/30/83)
6. Visibility Review (10/30/83)
7. Sources under EPA Review (10/30/83)
H. Permit Issuance Requirements (10/30/83)

Section V *Ambient Air Monitoring*

A. Purpose (7/1/82)
B. Completed Air Monitoring Projects (7/1/82)
1. Carbon Monoxide (7/1/82)
2. Nitrogen Oxides (7/1/82)
3. Sulfur Dioxide (7/1/82)
4. Ozone (7/1/82)
5. Total Suspended Particulates (TSP) (7/1/82)
6. Lead (7/1/82)
C. Air Monitoring Network (7/1/82)
1. Network Description (7/1/82)
2. Station Designations (7/1/82)
3. Air Quality Monitoring Procedures (7/1/82)
4. Ambient Sampling for Specific Pollutants (7/1/82)
E. Annual Review (7/1/82)

VOLUME III. APPENDICES

Section II *State Air Quality Control Program*

II.A. State Air Statues, except Section 46.03.170 (11/15/83)
State Attorney General Opinions on Legal Authority—(2/29/72, 2/29/80)
Title 18—Environmental Conservation, Chapter 50—Air Quality Control (10/30/83), (6/7/87), (6/2/88)
Title 18—Environmental Conservation, Chapter 52—Emissions Inspections and Maintenance Requirements for Motor Vehicles (5/19/85), except
18 AAC 52.010 (3), (3b), (3d), (3e), and (3g) (5/19/85)
18 AAC 52.020 (1) (5/19/85)
18 AAC 52.070 (5) (A)–(C) (5/19/85)
18 AAC 52.900 (14) (5/19/85)
II.B. Municipality of Anchorage/Cook Inlet ADEC Agreements (11/15/83)
II.C. Fairbanks North Star Borough Ordinances, except Section 8.04.070/FNSB & ADEC Agreements (11/15/83)

Section III *Areawide Pollutant Control Program*

III.B.3–a Anchorage Graphs of Highest and Second Highest CO readings for Each Site (11/15/83)
III.B.5–a Anchorage Traffic Improvements (11/15/83)
III.B.5–b Anchorage Contingency Plan (11/15/83)
III.B.5–c Anchorage Transit Ridership (11/15/83)

III.B.8–a Anchorage Graphs of Projected CO Concentrations for Each Site (11/15/83)
III.G Ordinance of the City and Borough of Juneau (10/6/83)
III.H Support Documents for Lead Plan (11/15/83)

Section IV *Point Source Control Program*

IV.1 PSD Area Classification and Reclassifications (11/15/83)
A. Class I Area Boundaries (11/15/83)
B. Areas Protected from Visibility Degradation (11/15/83)
C. Reclassification (11/15/83)
1. Limitations on PSD Reclassification (11/15/83)
2. PSD Reclassification Procedures (11/15/83)
IV.2 Compliance Assurance (11/15/83)
IV.3 Testing Procedures (11/15/83)

Section V *Ambient Air Monitoring*

ADEC Ambient Analysis Procedures (11/15/83)

[56 FR 19287, Apr. 26, 1991]

§§52.76—52.81 [Reserved]

§52.82 Extensions.

The Administrator, by authority delegated under section 186(a)(4) of the Clean Air Act, as amended in 1990, hereby extends for one year (until December 31, 1996) the attainment date for the MOA, Alaska CO nonattainment area.

[61 FR 33678, June 28, 1996]

EFFECTIVE DATE NOTE: At 61 FR 33678, June 28, 1996, §52.82 was revised, effective Aug. 27, 1996. For the convenience of the user, the superseded text is set forth as follows:

§52.82 Extensions.

The Administrator, by authority delegated under section 188(d) of the Clean Air Act, as amended in 1990, hereby extends for one year (until December 31, 1995) the attainment date for the Mendenhall Valley, Alaska, PM–10 nonattainment area.

[60 FR 47280, Sept. 12, 1995]

§§52.83—52.95 [Reserved]

§52.96 Significant deterioration of air quality.

(a) The State of Alaska Department of Environmental Conservation Air Quality Control Regulations as in effect on June 2, 1988 (specifically 18 AAC 50.020, 50.021, 50.300, 50.400, 50.510, 50.520, 50.530, 50.600, 50.620, and 50.900) and the State air quality control plan as in effect on June 2, 1988 (specifically, Section I.B. AIR QUALITY CONTROL REGIONS, Section I.C. ATTAINMENT/NONATTAINMENT DESIGNATIONS, Section I.D. PREVENTION OF SIGNIFICANT DETERIORATION DESIGNATIONS, Section IV.F. FACILITY REVIEW PROCEDURES, Section IV.G APPLICATION REVIEW AND PERMIT DEVELOPMENT, Section IV.H PERMIT ISSUANCE REQUIREMENTS, Appendix IV.1. PSD area Classification and Reclassification, and Appendix V ADEC Ambient Analysis Procedures), are approved as meeting the requirements of part C for preventing significant deterioration of air quality.

(b) The requirements of sections 160 through 165 of the Clean Air Act are not met for Indian reservations since the plan does not include approvable procedures for preventing the significant deterioration of air quality on Indian reservations and, therefore, the provisions of §52.21 (b) through (w) are hereby incorporated and made part of the applicable reservation in the State of Alaska.

[48 FR 30626, July 5, 1983, as amended at 56 FR 19288, Apr. 26, 1991]

Subpart D—Arizona

§52.120 Identification of plan.

(a) Title of plan: ''The State of Arizona Air Pollution Control Implementation Plan.''

(b) The plan was officially submitted on January 28, 1972.

(c) The plan revisions listed below were submitted on the dates specified.

(1) Letter of intent to revise plan submitted on March 1, 1972, by the Arizona State Board of Health.

(2) Letter of intent to revise plan submitted on March 2, 1972, by the Governor.

(3) Revised implementation plan submitted on May 30, 1972, by the Governor.

(4) Transportation control plan submitted on April 11, 1973, by the Governor.

(5) Amendments (Non-regulatory) to the transportation control plan submitted on May 10, 1973, by the Governor.

(6) Arizona Air Pollution Control Regulations (numbers in parentheses indicate recodification of regulations

as identified in the Arizona State Implementation Plan Semi-Annual Report submitted to EPA on September 4, 1975).

7–1–1.1 (R9–3–101) (Policy and Legal Authority)
7–1–1.3 (R9–3–103) (Air Pollution Prohibited)
7–1–1.5 (R9–3–105) (Enforcement)
7–1–4.3 (R9–3–403) (Sulfur Emissions: Sulfite Pulp Mills)
7–1–4.4 (R9–3–404) (Sulphur Emissions: Sulfuric Acid Plants)
7–1–4.5 (R9–3–405) (Sulphur Emissions: Other Industries)
7–1–5.1 (R9–3–501) (Storage of Volatile Organic Compounds)
7–1–5.2 (R9–3–502) (Loading of Volatile Organic Compounds)
7–1–5.3 (R9–3–503) (Organic Compound Emissions: Pumps and Compressors)
7–1–5.4 (R9–3–504) (Organic Solvents)
7–1–6.1 (R9–3–601) (Carbon Monoxide Emissions: Industrial)
7–1–7.1 (R9–3–701) (Nitrogen Oxide Emissions: Fuel Burning Installations)
7–1–7.2 (R9–3–702) (Nitrogen Oxide Emissions: Nitric Acid Plants
7–1–8.3 (R9–3–803) (New Installations)

Submitted on August 20, 1973.

(7) Revised transportation control plan submitted on September 11, 1973, by the Governor.

(8) Letter supplementing the revised transportation control plan encouraging mass transit, carpooling, etc., submitted on September 21, 1973, by the Governor.

(9) Letter supplementing the revised transportation control plan encouraging mass transit, carpooling, etc., submitted on October 2, 1973, by the Governor.

(10) Maricopa County Air Pollution Control District Regulation III, Rule 31 (Particulate Matter Emissions) submitted on January 28, 1974.

(11) Arizona Air Pollution Control Regulation 7–1–1.7 (R9–3–107) (Unlawful open burning) submitted on February 19, 1974.

(12) Pima County Air Pollution Control District Regulation II, Rule 2 (Particulate matter emissions) submitted on March 19, 1974.

(13) Air quality maintenance area designation analysis submitted on April 17, 1974, by the Arizona Department of Health Services.

(14) Arizona Air Pollution Control Regulations:

7–1–2.10 (R9–3–210) (Emergency Episode Criteria)
7–1–4.2 (R9–3–402) (Sulfur Emissions: Fuel Burning Installations)

Submitted on August 30, 1974.

(15) Arizona Air Pollution Control regulations 7–1–8.1 (R9–3–801) (Original State jurisdiction); 7–1–8.2 (R9–3–802) (Assertions of jurisdiction); 7–1–8.3 (R9–3–803) (Delegation of authority); 7–1–11.3 (R9–3–1203) (Suspension and revocation of permits); 7–1–11.4 (R9–3–1204) (Permits non-transferable); 7–1–11.5 (R9–3–1205) (Posting of permits); 7–1–11.6 (R9–3–1206) (Notice by permit agencies); 7–1–11.7 (R9–3–1207) (Equipment covered); 7–1–11.9 (R9–3–1209) (Permit Fees); and 7–1–1.4 (R9–3–104) (Recordkeeping and reporting) submitted September 27, 1974.

(16) Assertion of State Jurisdiction over Apache, Navajo, Santa Cruz and Yavapai Counties; Assertion of State Jurisdiction over Cochise County; and Assertion of State Jurisdiction over specific sources in Mohave County.

Submitted on February 3, 1975.

(17) Amendments to the Rules and Regulations of the Pima County Air Pollution Control District (Regulation I: Rules 2, 4D, 4E, 4J, 8G, 16C, 29, and 30) submitted on February 20, 1975, by the Director, Arizona Department of Health Services (the Governor's official representative).

(18) Air pollution control regulations for various counties submitted by the Governor on July 1, 1975, as follows:

(i) Coconino County Air Pollution Control Regulations.

12–1–1 (Legal Authority)
12–1–2 (Definitions)
12–1–3 (Air Pollution Prohibited)
12–2–2 (Operating Permits)
12–2–4 (Permit Fees)
12–2–5 (Permit Renewals)
12–2–7 (Testing of Installations)
12–2–8 (Compliance with Terms of Installation Permit)
12–2–9 (Notification of Denial of Permit)
12–2–10 (Appeals to the Hearing Board)
12–2–11 (Permits Not Transferable)
12–2–12 (Expiration of Installation Permit)
12–2–13 (Posting of Permits)
12–3–1 (Ambient Air Quality Standards)
12–3–2 (Emission Standards)
12–3–3 (Reporting of Emissions)
12–3–4 (Production of Records: Confidentiality)
12–3–5 (Monitoring Devices)
12–3–6 (Penalty for Violation)

12–4–1 (Shade, Density, or Opacity of Emissions)
12–4–2 (Dust Control)
12–4–3 (Processing of Animal or Vegetable Matter)
12–4–4 (Volatile and Odorous Materials)
12–4–5 (Storage and Handling of Petroleum Products)
12–5–1 (Permit Required)
12–5–2 (Performance Tests: Permit Tags)
12–5–3 (Emission Limitations)
12–5–4 (Authority of Other Public Agencies)
12–6–1 (Unlawful Open Burning)
12–6–2 (Exceptions Requiring no Permission)
12–6–3 (Exceptions Requiring Permission)
12–6–4 (Exceptions Under Special Circumstances)
12–7–1 (Misdemeanor: Penalty)
12–7–2 (Order of Abatement)
12–7–3 (Hearings on Orders of Abatement)
12–7–5 (Notice of Hearing; Publication; Service)
12–7–6 (Injunctive Relief)

(ii) Mohave County Air Pollution Control Regulations.

Sec. 1, Reg. 1 (Policy and Legal Authority)
Sec. 1, Reg. 2 (Definitions)
Sec. 1, Reg. 3 (Air Pollution Prohibited)
Sec. 1, Reg. 4 (Enforcement)
Sec. 2, Reg. 1 (Shade, Density or Opacity of Emissions)
Sec. 2, Reg. 2 (Particulate Matter)
Sec. 2, Reg. 3 (Reduction of Animal or Vegetable Matter)
Sec. 2, Reg. 4 (Evaporation and Leakage)
Sec. 2, Reg. 5 (Storage Tanks)
Sec. 3, Reg. 1 (Particulate Matter from Fuel Burning Installations)
Sec. 3, Reg. 2 (Particulate Matter from Other Sources)
Sec. 3, Reg. 3 (Sulfur from Primary Copper Smelters)
Sec. 3, Reg. 4 (Ground Level Concentrations)
Sec. 3, Reg. 5 (Exceptions)
Sec. 3, Reg. 6 (Incinerators)
Sec. 4, Reg. 1 and Reg. 2 (Responsibility and Requirements of Testing)
Sec. 5, Reg. 1 (Open Fires: Prohibition and Exceptions)
Sec. 6, Reg. 1 (Sulfur Dioxide)
Sec. 6, Reg. 2 (Non-Specific Particulate)
Sec. 6, Reg. 3 (Evaluation)
Sec. 6, Reg. 4 (Anti-Degradation)
Sec. 7 (Violations)

(iii) Yuma County Air Pollution Control Regulations.

8–1–1.1 (Policy and Legal Authority)
8–1–1.2 (Definitions)
8–1–1.3 (Air Pollution Prohibited)
8–1–1.4 (Recordkeeping and Reporting)
8–1–1.5 (Enforcement)
8–1–1.6 (Exceptions)
8–1–2.1 (Non-Specific Particulate)
8–1–2.2 (Sulfur Dioxide)
8–1–2.3 (Non-Methane Hydrocarbons)
8–1–2.4 (Photochemical Oxidants)
8–1–2.5 (Carbon Monoxide)
8–1–2.6 (Nitrogen Dioxide)
8–1–2.7 (Evaluation)
8–1–2.10 (Emergency Episode Criteria)
8–1–3.1 (Visible Emissions; General)
8–1–3.2 (Fugitive Dust)
8–1–3.3 (Particulates—Incineration)
8–1–3.4 (Particulates—Wood Waste Burners)
8–1–3.5 (Particulates—Fuel Burning Equipment)
8–1–3.6 (Particulates—Process Industries)
8–1–4.2 (Fuel Burning Installations)
8–1–4.3 (Sulfur Emissions—Sulfite Pulp Mills)
8–1–4.4 (Sulfur Emissions—Sulfuric Acid Plants)
8–1–4.5 (Sulfur Emissions—Other Industries)
8–1–5.1 (Storage of Volatile Organic Compounds)
8–1–5.2 (Loading of Volatile Organic Compounds)
8–1–5.3 (Pumps and Compressors)
8–1–5.4 (Organic Solvents; Other Volatile Compounds)
8–1–6.1 (CO_2 Emissions—Industrial)
8–1–7.1 (NO_2 Emissions—Fuel Burning Equipment)
8–1–7.2 (NO_2 Emissions—Nitric Acid Plants)
8–1–8.1 (Open Burning—Prohibition)
8–1–8.2 (Open Burning—Exceptions)

(iv) Pinal-Gila Counties Air Pollution Control Regulations.

7–1–1.1 (Policy and Legal Authority)
7–1–1.2 (Definitions)
7–1–1.3 (Air Pollution Prohibited)
7–1–2.2 (Permit Unit Description and Fees)
7–1–2.4 (Appeals to Hearing Board)
7–1–2.5 (Transfer: Posting: Expirations)
7–1–2.6 (Recordkeeping and Reporting)
7–1–2.7 (Enforcement)
7–1–2.8 (Exceptions)
7–1–4.1 and 7–1–4.2 (Orders of Abatement)
7–1–5.1 (Classification and Reporting: Production of Records: Violation: and Penalty)
7–1–5.2 (Special Inspection Warrant)
7–1–5.3 (Decisions of Hearing Boards: Subpoenas)
7–1–5.4 (Judicial Review: Grounds: Procedures)
7–1–5.5 (Notice of Hearing: Publication: Service)
7–1–5.6 (Injunctive Relief)
7–2–1.1 (Non-Specific Particulate)
7–2–1.2 (Sulfur Dioxide)
7–2–1.3 (Non-Methane Hydrocarbons)
7–2–1.4 (Photochemical Oxidants)
7–2–1.5 (Carbon Monoxide)
7–2–1.6 (Nitrogen Dioxide)
7–2–1.7 (Evalution)
7–2–1.8 (Anti-Degradation)

7–3–1.1 (Visible Emissions: General)
7–3–1.2 (Particulate Emissions—Fugitive Dust)
7–3–1.3 (Open Burning)
7–3–1.4 (Particulate Emissions—Incineration)
7–3–1.5 (Particulate Emissions—Wood-Waste Burners)
7–3–1.6 (Reduction of Animal or Vegetable Matter)
7–3–1.7 (Particulate Emissions—Fuel Burning Equipment)
7–3–1.8 (Particulate Emissions—Process Industries)
7–3–2.1 (Copper Smelters)
7–3–2.2 (SO_2 Emissions—Fuel Burning Installations)
7–3–2.3 (SO_2 Emissions—Sulfite Pulp Mills)
7–3–2.4 (SO_2 Emissions—Sulfuric Acid Plants)
7–3–2.5 (Other Industries)
7–3–3.1 (Storage of Volatile Organic Compounds)
7–3–3.2 (Loading of Volatile Organic Compounds)
7–3–3.3 (Pumps and Compressors)
7–3–3.4 (Organic Solvents: Other Volatile Compounds)
7–3–4.1 (CO_2 Emissions—Industrial)
7–3–5.1 (NO_2 Emissions—Fuel Burning Equipment)
7–3–5.2 (NO_2 Emissions—Nitric Acid Plants)
7–3–6.1 (Policy and Legal Authority)

(19) Arizona Air Pollution Control Regulations:

R9–3–102 (Definitions)
R9–3–108 (Test Methods and Procedures)
R9–3–301 (Visible Emissions—General)
R9–3–302 (Particulate Emissions: Fugutive Dust)
R9–3–303 (Particulate Emissions: Incineration)
R9–3–304 (Particulate Emissions: Wood Waste Burners)
R9–3–305 (Particulate Emissions: Fuel Burning Equipment)
R9–3–307 (Particulate Emissions: Portland Cement Plants)
R9–3–308 (Particulate Emissions: Heater-Planers)

Submitted on September 16, 1975.

(20) Arizona Air Pollution Control Regulations R9–3–505 (Gasoline Volatility Testing); R9–3–506 (Gasoline Volatility Standards); R9–3–1001 (Policy and Legal Authority); R9–3–1020 (State Stations Acting as Fleet Inspection Stations); any Fleet Inspection Stations for State Stations); submitted on January 23, 1976.

(21) Amendments to the rules and Regulations of the Pima County Air Pollution Control District (Regulation I:

Rule 2 (paragraph uu-yy, Definitions); regulation II (Fuel Burning Equipment): Rule 2G (paragraphs 1–4c, Particulate Emissions), Rule 7A (paragraphs 1–6, Sulfur Dioxide Emissions), Rule 7B (paragraphs 1–4, Nitrogen Oxide Emission); Regulation VI: Rule 1A–H, (Ambient Air Quality Standards); Regulation VII (paragraph A–D, Standards of Performance for New Stationary Sources); and Regulation VIII (paragraphs A–C, Emission Standards for Hazardous Air Pollutants)) submitted on September 30, 1976 by the Director, Arizona Department of Health Services (the Governor's official representative).

(22)—(23) [Reserved]

(24) Arizona Air Pollution Control Regulations R9–3–1002 (Definitions); R9–3–1003 (Vehicles To Be Inspected by the Mandatory Vehicular Emissions Inspection Program); R9–3–1004 (State Inspection Requirements); R9–3–1005 (Time of Inspections); R9–3–1006 (Mandatory Vehicular Emissions Inspection); R9–3–1007 (Evidence of Meeting State Inspection Requirements); R9–3–1008 (Procedure for Issuing Certificates of Waiver); R9–3–1010 (Low Emissions Tune Up); R9–3–1011 (Inspection Report); R9–3–1012 (Inspection Procedure and Fee); R9–3–1013 (Reinspections); R9–3–1016 (Licensing of Inspectors); R9–3–1017 (Inspection of Governmental Vehicles); R9–3–1018 (Certificate of Inspection); R9–3–1019 (Fleet Station Procedures and Permits); R9–3–1022 (Procedure for Waiving Inspections Due to Technical Difficulties); R9–3–1023 (Certificate of Exemption); R9–3–1025 (Inspection of State Stations); R9–3–1026 (Inspection of Fleet Stations); R9–3–1027 (Registration of Repair Industry Analyzers); R9–3–1029 (Vehicle Emission Control Devices); and R9–3–1030 (Visible Emissions; Diesel-Powered Locomotives); submitted on February 11, 1977.

(25) [Reserved]

(26) Maricopa County Air Pollution Control District Regulation IV, rule 41, paragraph B (Continuously Monitoring and Recording Emissions) submitted on July 29, 1977.

(27) The following amendments to the plan were submitted on January 4, 1979 by the Governor's designee.

(i) Arizona State Rules and Regulations for Air Pollution Control.

(A) R–9–3–101, A., Nos. 2, 3, 29, 41, 53, 55, 87, 88, 89, 91, 92, 95, 100 and 117; R9–3–301, paragraphs D, J, and N; R9–3–306, paragraphs D and J; and R9–3–307, paragraphs C and E.

(B) New or amended Rules R9–3–101 (Nos. 1, 4, 6, (a, c, and d), 8, 9, 11, 13, 17 to 26, 28, 30 to 35, 37 to 40, 43 to 45, 48, 49, 54, 57 to 59, 61 to 73, 77 to 80, 82, 83, 86, 90, 94, 96, 98, 101, 102, 104, 105, 107 to 115, 118 to 120, 122, to 129, and 131), R9–3–217, R9–3–218, R9–3–219, R9–3–308, R9–3–310 (Paragraph C), R9–3–311 (Paragraph A), R9–3–312, R9–3–313 (Paragraphs A.1, A.2.b, A.3, A.4, B to D.1, D.3, D.4.a to F.1.2.iii, F.1.b., and F.2.b. to F.4), R9–3–314 to R9–3–319, R9–3–402 to R9–3–404, R9–3–406, R9–3–407, R9–3–409, R9–3–410, R9–3–502 (Paragraphs B, C, C.2, and D to G), R9–3–503 (Paragraph A), R9–3–504 (Paragraphs B and C), R9–3–505 (Paragraphs A, B.1.b., B.2.b, and B.3 to D), R9–3–506 (Paragraphs A.2, B, C.1.a to C.4), R9–3–507 (Paragraphs D to F), R9–3–508 (Paragraphs A and C), R9–3–510 (Paragraphs B to E), R9–3–511 (Paragraph B), R9–3–512 (Paragraph B), R9–3–513 (Paragraphs B and C), R9–3–514 (Paragraphs B and C), R9–3–516 (Paragraph B), R9–3–517 (Paragraphs B and C), R9–3–518 (Paragraphs B and C), R9–3–519 (Paragraphs A.2, A.3.a to A.3.c, A.3.e and B to C), R9–3–520 (Paragraphs B and C), R9–3–521 (Paragraphs B to D), R9–3–522 (Paragraphs A.1 to A.5, B and C), R9–3–523 (Paragraph B), R9–3–524 (Paragraphs C, D.1, D.2, D.4 to G.5), R9–3–525 (Paragraphs B to D), R9–3–526, R9–3–527, R9–3–528 (Paragraphs B to E and F.1 to F.4), R9–3–601 to R9–3–605, R9–3–1101, R9–3–1102, Appendix 10 (Sections A10.1.3.3, A10.1.4. and A10.2.2 to A10.3.4.) and Appendix 11.

(28) The following amendments to the plan were submitted on January 18, 1979 by the Governor's designee.

(i) Maricopa County Bureau of Air Pollution Control Rules and Regulations.

(A) Rule 33, Storage and Handling of Petroleum Products.

(B) New or amended Rules 21G and 41.

(29) The following amendments to the plan were submitted on January 23, 1979, by the Governor's designee.

(i) Arizona State Rules and Regulations for Air Pollution Control.

(A) Arizona Testing Manual for Air Pollutant Emissions (excluding Sections 2.0 and 5.0).

(30) Redesignation of AQCR's in Arizona, submitted on January 26, 1979, by the Governor.

(31) Revisions to the Arizona Air Pollution Control Regulations submitted on March 21, 1979:

R9–3–1002 (22,34); R9–3–1003 [A(A8–11),B,C]; R9–3–1005 [A, (A3)]; R9–3–1006 [A,(A1,2),B, (B2,3,4,5),D,E, (E1(c),2(c)),F,G, (G1,2), Table II]; R9–3–1008 [B,(B1,2,6,7)]; R9–3–1010 [A,(A3),C,D,F]; R9–3–1011 [A,B,(B1,2,3)];R9–3–1012(b); R9–3–1014; R9–3–1017 [B,(B4), C, E]; R9–3–1019 [A,B,D, D(1)(a)(i), D(1)(a)(ii)(6), D(1)(a)(iii), D(1)(c), D(1)(f)(11), H, (H1,2), I(I8,9,10,11,12,13), J, (J10), L, M, N, (N1,2)]; R9–3–(C,E); R9–3–1022(B); R9–3c–091023(A,B); R9–3–1027(F).

(32) The following amendments to the plan were submitted on February 23, 1979 by the Governor's designee.

(i) Nonatainment Area Plan for Carbon Monoxide and Photochemical Oxidants, Maricopa County Urban Planning Area.

(33) The *Metropolitan Pima County Nonattainment Area Plan for CO* was submitted by the Governor's designee on March 20, 1979.

(34) The *Metropolitan Pima County Nonattainment Area Plan for TSP* was submitted by the Governor's designee on March 27, 1979.

(35) The following amendments to the plan were submitted on April 10, 1979, by the Governor's designee.

(i) Yuma County Air Pollution Control District.

(A) New or amended Rules 8–1–1.2 8–1–1.3 thru 8–1–1.6 and 8–1–1.8 thru 8–1–1.13; 8–1–2.1 thru 8–1–2.6 and 8–1–2.8; 8–1–3.1 thru 8–1–3.6, 8–1–3.7 (except paragraph ''F'') and 8–1–3.8 thru 8–1–3.20; and Appendices I and II.

(36) The following amendments to the plan were submitted on July 3, 1979 by the Governor's designee.

(i) Revision to the Nonattainment Area Plan for Carbon Monoxide and Photochemical Oxidants, Maricopa County Urban Planning Area.

(37) The following amendments to the plan were submitted on September 20, 1979 by the Governor's designee.

(i) Arizona State Rules and Regulations for Air Pollution Control.

(A) New or amended rule R9–3–515 (Paragraphs C.1.a. to C.1.h.; C.2; C.3, C.3.b., C.3.c., and C.3.h.; C.4.c. to C.4.g. and C.4.i.; C.5 and C.5.b. to C.5.d.; C.6.b.i. to C.6.b.iii., C.6.b.vi., C.6.b.vii., and C.6.c.; and C.8.).

(ii) ''ASARCO Incorporated, Hayden Copper Smelter, State Implementation Plan Determination of Good Engineering Practice Stack Height,'' September 17, 1979, issued by ADHS.

(38) The following amendment to the plan were submitted on October 9, 1979, by the Governor's designee.

(i) Pima County Health Department.

(A) New or amended Regulation 10: Rules 101–103; Regulation 11: Rules 111–113; Regulation 12: Rules 121–123; Regulation 13: Rules 131–137; Regulation 14: Rules 141 and 143–147; Regulation 15: Rule 151; Regulation 16: Rules 161–165; Regulation 17: Rules 172–174; Regulatiotion 24: Rules 241 and 243–248; Regulation 25: Rules 251 and 252; Regulation 30: Rules 301 and 302; Regulation 31: Rules 312–316 and 318; Regulation 32: Rule 321; Regulation 33: Rules 331 and 332; Regulation 34: Rules 341–344; Regulation 40: Rules 402 and 403; Regulation 41: Rules 411–413; Regulation 50: Rules 501–503 and 505–507; Regulation 51: Rules 511 and 512; Regulation 60: Rule 601; Regulation 61: Rule 611 (Paragraph A.1 to A.3) and Rule 612; Regulation 62: Rules 621–624; Regulation 63: Rule 631; Regulation 64: Rule 641; Regulation 70: Rules 701–705 and 706 (Paragraphs A to C, D.3, D.4, and E); Regulation 71: Rules 711–714; Regulation 72: Rules 721 and 722; Regulation 80: Rules 801–804; Regulation 81: Rule 811; Regulation 82: Rules 821–823; Regulation 90: Rules 901–904; Regulation 91: Rules 911 (except Methods 13–A, 13–B, 14, and 15; and Rules 912, and 913; Regulation 92: Rules 921–924; and Regulation 93: Rules 931 and 932.

(B) New or amended Regulation 17: Rule 171, paragraphs B.1, B.1.a, B.7, B.8, C.1.a, C.1.b, C.2.a, C.2.c, C.2.d, C.3.a, and E.1.b; Regulation 42: Rules 421, 422, 423, 424, 425, and 426; and Regulation 50: Rule 504.

(39) The following amendments to the plan were submitted on November 8, 1979 by the Governor's designee.

(i) Nonattainment Area Plan for Total Suspended Particulates, Maricopa County Urban Planning Area.

(40) [Reserved]

(41) The following amendments to the plan were submitted on February 15, 1980, by the Governor's designee.

(i) 1.0 Air Quality Surveillance Network.

(42) The *Technical Basis of New Source Review Regulations, Pima County, Arizona, February 6, 1980* (AQ–125–a) was submitted by the Governor's designee on February 28, 1980.

(43) The following amendments to the plan were submitted on April 1, 1980 by the Governor's designee.

(i) Arizona State Rules and Regulations for Air Pollution Control.

(A) R9–3–101, A., Nos. 7, 27, 46, 52, 54, 72, 73, 74, 81, 84, 85, 86, 88, 89, 92, 96, 97, 98, 111, 117, 118, and 122; R9–3–301, paragraphs B–1, B–2, C, E, F, H, I, J, K, M, N, O, P, and Q; R9–3–302, (except paragraphs D, E, and I); R9–3–303; R9–3–306, paragraphs B–2, C–1, C–3, and C–5 to C–7, E, F, G–1, G–3, G–4, H, and I; and R9–3–307, paragraphs A, B, D, and F.

(B) New or amended Rules R9–3–101 (Nos. 5, 15, 16, 42, 49, 51, 55, 94, 101, 103, 106, 126, 127, and 133), R9–3–201 (paragraph D.2), R9–3–202 (Paragraph D.2), R9–3–203 (Paragraph D.2), R9–3–204 (Paragraph C.2), R9–3–205 (Paragraph C.2), R9–3–206 (Paragraph C.2), R9–3–207 (Paragraph C.2), R9–3–313 (Paragraph F.1.a.i and ii), R9–3–401, R9–3–405, R9–3–408, R9–3–501 (Paragraph A to C), R9–3–502 (Paragraph A to A.4), R9–3–503 (Paragraphs B, C.1,C.2.a. to C.2.f., C.4 and C.5), R9–3–504 (Paragraph A.1 to A.4), R9–3–508 (Paragraph B.1 to B.6), R9–3–510 (Paragraph A.1 and A.2), R9–3–511 (Paragraph A.1 to A.5), R9–3–512 (Paragraph A.1 to A.5), R9–3–513 (Paragraph A.1 to A.5), R9–3–514 (Paragraph A.2), R9–3–516 (Paragraph A.1 to A.6), R9–3–517 (Paragraph A.1 to A.5), R9–3–518 (Paragraph A.1 to A.5), R9–3–520 (Paragraph A.1 to A.6), R9–3–521 (Paragraph A.1 to A.5), and Appendices 1 and 2.

(ii) Arizona Lead SIP Revision.

(44) The following amendments to the plan were submitted on June 23, 1980 by the Governor's designee.

(i) Maricopa County Bureau of Air Pollution Control Rules and Regulations.

(A) Rule 34, Organic Solvents.

(B) New or amended Rules 2 (except #49 and 57), 3, 24, 25, 25, 26, 27, 30, 31(A), (B), and (H), 32, (G), (H), (J), and (K), 40, 70–72, and 74 and deletion of ''ee''.

(45) The following amendments to the plan were submitted on July 17, 1980 by the Governor's designee.

(i) Arizona State Rules and Regulations for Air Pollution Control.

(A) R–9–3–101, A., Nos. 73, 74, 75, 83, 86, 87, 88, 90, 91, 94, 98, 99, 100, 113, 119, 120, and 124; R9–3–301, paragraphs A, B–3, G, I, J, K, L, M, N, O, P, Q, and R; R9–3–306, paragraphs A, B–1, B–3, B–4, C–2, C–4, and G–2; and R9–3–320, paragraphs B and C.

(B) New or amended Rules R9–3–101 (Nos. 6(b), 10, 12, 14, 36, 50, 55, 77, 84, and 92), R9–3–311 (Paragraph B), R9–3–313 (Paragraphs A.2.a., D.2, D.4, F.1.C, and F.2.a.), R9–3–320 (Paragraph A), R9–3–502 (Paragraph C.1), R9–3–503 (Paragraph C, C.2, C.2.g. and C.3), R9–3–504 (Paragraph A), R9–3–505 (Paragraph B.1.a, B.2.a), R9–3–506 (Paragraph A to A.1), R9–3–507 (Paragraphs A to C), R9–3–508 (Paragraph B), R9–3–509, R9–3–510 (Paragraph A), R9–3–511 (Paragraph A), R9–3–512 (Paragraph A), R9–3–513 (Paragraph A), R9–3–514 (Paragraphs A to A.1), R9–3–516 (Paragraph A), R9–3–517 (Paragraph A), R9–3–518 (Paragraph A), R9–3–519 (Paragraph A to A.1, A.3, and A.3.d), R9–3–520

(Paragraph A), R9–3–521 (Paragraph A), R9–3–522 (Paragraph A), R9–3–523 (Paragraph A), R9–3–524 (Paragraphs A, B, D, and D.3), R9–3–525 (Paragraph A), R9–3–528 (Paragraphs A and F.5), Section 3, Method 11; Section 3.16, Method 16; Section 3.19, Method 19; Section 3.20, Method 20; and Appendix 10 (Sections A10.2 and A10.2.1).

(C) New or amended Rule R9–3–515 (Paragraphs A; and C.6, C.6.b, and C.6.b.v.).

(46) The following amendments to the plan were submitted on August 7, 1980, by the Governor's designee.

(i) Pinal-Gila Counties Air Quality Control District.

(A) New or amended Rules 7–1–1.2, 7–1–1.3(C), 7–3–1.1, 7–3–1.4(C), 7–3–1.7(F), and 7–3–3.4.

(47) The following amendments to the plan were submitted on September 10, 1980, by the Governor's designee.

(i) Arizona State Rules and Regulations and Air Pollution Control.

(A) New or amended Rules R9–3–101 (Nos. 24, 55, 102, and 115 (25–54, 56–101, 103–114, and 116–140 are renumbered only), R9–3–201 (Paragraphs A to D.1 and E), R9–3–202 (Paragraphs A to D.1 and E), R9–3–203 (Paragraphs A to D.1 and E), R9–3–204 (Paragraphs A to C.1 and D), R9–3–205 (Paragraphs A to C.1 and D), R9–3–206 (Paragraphs A to C.1 and D), R9–3–207 (Paragraphs A to C.1 and D), and R9–3–216.

(48) Arizona Lead SIP Revision submitted by the State on September 26, 1980.

(49) The following amendments to the plan were submitted on July 13, 1981 by the Governor's designee.

(i) Arizona Revised Statute Sec. 36–1718.

(50) The following amendments to the plan were submitted on July 13, 1981, by the Governor's designee.

(i) Arizona State Rules and Regulations for Air Pollution Control.

(A) New or amended Rules R9–3–310 (Paragraphs A and B), R9–3–501 (Paragraph D), R9–3–503 (Paragraph C.6), R9–3–506 (Paragraph C to C.1), and Appendix 10 (Sections A10.1–A10.1.3.2).

(B) New or amended Rule R9–3–515 (Paragraph C.4.a. and C.4.b.).

(ii) Arizona Revised Statutes.

(A) Arizona County: Chapter 6, Article 8. Air Pollution, Sections 36–770 to 36–778, 36–779 to 36–779.07, 36–780, 36–780.01, 36–781 to 36–783, 36–784 to 36–784.04, 36–785, 36–785.01, 36–786 to 36–788, 36–789 to 36–789.02, 36–790, and 36–791.

(B) Arizona State: Chapter 14, Air Pollution, Article 1. State Air Pollution Control, Sections 36–1700 to 36–1702, 36–1704 to 36–1706, 36–1707 to 36–1707.06, 36–1708, 36–1720.02, and 36–1751 to 36–1753.

(51) The following amendments to the plan were submitted on June 1, 1981, by the Governor's designee.

(i) Pima County Health Department.

(A) New or amended Regulation 14:

Rule 142; Regulation 20: Rule 204; Regulation 24: Rule 242; Regulation 26: Rule 261; Regulation 50: Rule 504; Regulation 61: Rule 611 (Paragraph A); Regulation 70: Rule 706 (Paragraphs D.1 and D.2); and Regulation 91: Rule 911 (Methods 19 and 20).

(52) The following amendments to the plan were submitted on August 5, 1981, by the Governor's designee.

(i) Arizona State Rules and Regulations for Air Pollution Control.

(A) New or amended Rules R9–3–1002, R9–3–1003, R9–3–1005, R9–3–1006, R9–3–1008, R9–3–1010 to R9–3–1014, R9–3–1016, R9–3–1019, R9–3–1023, R9–3–1025, R9–3–1027, and R9–3–1030.

(ii) Arizona Revised Statutes.

(A) Inspection and Maintenance—Chapter 14, Article 3. Annual Emissions Inspection of Motor Vehicles, Sections 36–1771 to 36–1775, 36–1708.01, 36–1709 to 36–1711, 36–1712 to 36–1712.04, 36–1713, 36–1713.01, 36–1714 to 36–1717, 36–1718, 36–1718.01, 36–1719, 36–1720, and 36–1776 to 36–1780.

(53) The following amendments to the plan were submitted on March 8, 1982, by the Governor's designee.

(i) Maricopa County Bureau of Air Pollution Control Rules and Regulations.

(A) Rules 2 (Nos. 11 and 33, and deletion of Nos. 18, 49, 50, 52, and 54), 28 and 33.

(ii) The Improvement Schedules for Transit System and Rideshare Program in Metropolitan Pima County.

(54) The following amendments to the plan were submitted on June 3, 1982 by the Governor's designee.

(i) Arizona State Rules and Regulations for Air Pollution Control.

(A) New or amended Rule R9–3–515 Paragraphs C to C.1. and C.1.i.; C.3.a. and C.3.d. to C.3.g.; C.4. and C.4.h.; C.5.a.; C.6.a. and C.6.b.iv.; and C.9.).

(B) New or amended rules R9–3–101 (Nos. 3, 7, 8, 17, 18, 19, 20, 21, 29, 34, 35, 37, 56, 61, 62, 63, 68, 69, 75, 77, 78, 79, 88, 89, 90, 91, 98, 99, 101, 117, 122, 129, 133, 136, 146, and 157; 53 and 123 are deleted); R9–3–217; R9–3–301; R9–3–304; R9–

3–305; R9–3–306 (paragraph A only); R9–3–320 (Repealed and Reserved); R9–3–1101 (paragraphs A, C, and D); Appendix 1; and Appendix 2.

(C) New or amended rules R9–3–101 (Nos. 4 to 6, 9 to 16, 22 to 28, 30 to 33, 36, 38 to 55, 57 to 60, 64 to 67, 70 to 74, 76, 80 to 87, 92 to 97, 100, 102 to 116, 118 to 121, 123 to 128, 130 to 132, 134, 135, 137 to 141, 142 to 145, 147 to 156, and 158 are renumbered only); R9–3–219; R9–3–502 (paragraph A to A.1 and A.2); R9–3–505 (paragraph B to B.1, B.2, B.3, and B.4); R9–3–508 (paragraph B to B.1, B.2, and B.5); R9–3–511 (paragraph A to A.1 and A.2); R9–3–513 (paragraph A to A.1 and A.2); R9–3–516 (paragraph A to A.1 and A.2); R9–3–517 (paragraph A to A.1); R9–3–518 (paragraph A to A.1 and A.2); R9–3–520 (paragraph A to A.1 and A.2); R9–3–521 (paragraph A to A.1 and A.2); R9–3–522 (paragraph A to A.1 and A.2); and Appendix 8 (Sections A8.3.1 and A8.3.2).

(D) New or amended rules R9–3–302 (paragraphs A–H); and R9–3–303 (paragraphs A to C and E to I), adopted on May 26, 1982.

(E) Previously approved and now removed (without replacement) rule R9–3–101, No. 46.

(55) The following amendments to the plan were submitted by the Governor's designee on March 4, 1983.

(i) Incorporation by reference.

(A) Maricopa County Health Department, Bureau of Air Quality Control.

(1) New or amended rule 21.0:A-C, D.1.a-d, and E adopted on October 25, 1982.

(56) The following amendments to the plan were submitted on February 3, 1984, by the Governor's designee.

(i) Arizona State Rules and Regulations for Air Pollution Control.

(A) New or amended rules R9–3–101 (No.'s 98 and 158), R9–3–201 to R9–3–207, R9–3–215, R9–3–218, R9–3–310, R9–3–322, R9–3–402, R9–3–404, R9–3–502, R9–3–515 (paragraph (c)), R9–3–529, R9–3–1101, and Appendices I and II.

(B) New or amended rules R9–3–101, Nos. 135 and 157, adopted on September 19, 1983.

(57) The following amendments to the plan were submitted by the Governor's designee on April 17, 1985.

(i) Incorporation by reference.

(A) Maricopa County Health Department, Bureau of Air Quality Control.

(1) New or amended regulations: rule 21.0: D.1., D.1.e, f, and g adopted on July 9, 1984.

(58) The following amendments to the plan were submitted by the Governor's designee on October 18, 1985.

(i) Incorporation by reference.

(A) Pima County Health Department.

(1) New or amended regulations: Regulation 16: Rule 166; Regulation 17; Rules 171 and 175; Regulation 20: Rule 202; Regulation 37: Rules 371, 372, 373, Figure 371–A, Figure 371–C, and Figure 372; and Regulation 38, Rule 381, A1, 2, 3, 4, 5, and B, adopted on December 6, 1983.

(59) The following amendments to the plan were submitted by the Governor's designee on October 24, 1985.

(i) Incorporation by reference.

(A) Arizona Department of Health Services.

(1) New or amended rule R9–3–303, adopted on September 28, 1984.

(60) The following amendments to the plan were submitted by the Governor's designee on October 5, 1987.

(i) Incorporation by reference.

(A) Arizona Department of Health Services.

(1) New or amended rules R9–3–1001 (Nos. 8, 25, 33, 34, 38, 39, 40, and 43, No. 8), R9–3–1003, R9–3–1005, R9–3–1006, R9–3–1008, R9–3–1009, R9–3–1010, R9–3–1011, R9–3–1013, R9–3–1016, R9–3–1018, R9–3–1019, R9–3–1025, R9–3–1026, R9–3–1027, R9–3–1028, R9–3–1030, and R9–3–1031, adopted on December 23, 1986.

(2) Previously approved and now removed (without replacement), Rule R9–3–1014.

(B) The Maricopa Association of Governments (MAG) 1987 Carbon Monoxide (CO) Plan for the Maricopa County Area, MAC CO Plan Commitments for Implementation, and Appendix A through E, Exhibit 4, Exhibit D, adopted on July 10, 1987.

(61) The following amendments to the plan were submitted by the Governor's designee on January 6, 1988.

(i) Incorporation by reference.

(A) The 1987 Carbon Monoxide State Implementation Plan Revision for the Tucson Air Planning Area adopted on October 21, 1987.

(62) The following amendments to the plan were submitted by the Governor's designee on March 23, 1988.

(i) Incorporation by reference.

(A) Arizona Revised Statutes.

(1) Senate Bill 1360: Section 6: ARS 15–1444–C (added), Section 7: QRS 15–1627–F (added), Section 21: ARS 49– 542–A (amended, Section 21: ARS 49–542–E (added), Section 21: ARS 49–542–J.3.(b) (amended), and Section 23: ARS 49–550–E (added), adopted on May 22, 1987.

(2) Senate Bill 1360: Section 2: ARS 9-500.03 (added), Section 14: ARS 41–796.01 (added);

Section 17: 49–454 (added), Section 18: 49–474.01 (added), and Section 25: ARS 49–571 (added), adopted on May 22, 1987.

(63) The following amendments to the plan were submitted by the governor's designee on May 26, 1988:

(i) Incorporation by reference.

(A) Travel reduction ordinances for Pima County: Inter governmental Agreement (IGA) between Pima County, City of Tucson, City of South Tucson, Town of Oro Valley and Town of Marana, April 18, 1988; Pima County Ordinance No. 1988–72, City of Tucson ordinance No. 6914, City of South Tucson Resolutions No. 88–01, 88–05, Town of Oro Valley Resolutions No. 162, 326 and 327, Town of Marana Resolutions No. 88–06, 88–07 and Ordinance No. 88.06.

(64) The following amendments to the plan were submitted by the Governor's designee on June 1, 1988.

(i) Incorporation by reference.

(A) Letter from the Arizona Department of Environmental Quality, dated June 1, 1988, committing to administer the provisions of the Federal New Source Review regulations consistent with EPA's requirements. The commitments apply to the issuance of, or revision to, permits for any source which is a major stationary source or major modification as defined in 40 Code of Federal Regulations, part 51, subpart I.

(65) The following amendments to the plan were submitted by the Governor's designee on July 18, 1988.

(i) Incorporation by reference.

(A) Arizona Revised Statutes.

(*1*) House Bill 2206, Section 2: ARS 15–1627 (amended); Section 6: Title 28, ARS Chapter 22, Article 1, ARS 28–2701, ARS 28–2702, ARS 28–2703, ARS 28–2704, and ARS 28–2705 (added); Section 7: ARS 41.101.03 (amended); Section 9: ARS 41–2605 (amended); Section 10: ARS 41–2066 (amended); Section 11: ARS 41–2083 (amended); Section 13: Title 41, Chapter 15, Article 6, ARS 41–2121: Nos. 1, 3, 4, 5, 6, 7, 8, and 9, ARS 41–2122, ARS 41–2123, ARS 41–2124 (added); Section 15: Title 49, Chapter 3, Article 1, ARS 49–403 to 49–406 (added); Section 17: Title 49, Chapter 3, Article 3, ARS 49–506 (added); Section 18; ARS 49–542 (amended); Section 19: ARS 49–550 (amended); Section 20: ARS 49–551 (amended); Section 21: Title 49, Chapter 3, Article 5, ARS 49–553 (added), Section 22: ARS 49–571 (amended); Section 23: Title 49, Chapter 3, Article 8, ARS 49–581, ARS 49–582, ARS 49–583, ARS 49–584, ARS 49–585; ARS 49–586, ARS 49–588, ARS 49–590, and ARS 49–593 (added); Section 25: Definition of major employer, Section 27: Appropriations; Section 29: Delayed effective dates, adopted on June 28, 1988.

(*2*) House Bill 2206 section 6 which added, under Arizona Revised Statutes, title 28, chapter 22, new sections 28–2701 through 28–2708, and section 13 which added, under Arizona Revised Statutes, title 41, chapter 15, Article 6 new sections 41–2125A and 41–2125B. (Oxygenated fuels program for Pima County.)

(66) The following amendments to the plan were submitted by the Governor's designee on July 22, 1988.

(i) Incorporation by reference.

(A) Letter from the Pima County Health Department, Office of Environmental Quality, dated April 24, 1988 committing to administer the New Source Review provisions of their regulations consistent with EPA's requirements. The commitments apply to the issuance of, or revision to, permits for any source which is a major stationary source of major modification as defined in 40 Code of Federal Regulations, part 51, subpart I.

(B) Letter from Maricopa County Department of Health Services, Division of Public Health, dated April 28, 1988 and submitted to EPA by the Arizona Department of Environmental Quality July 25, 1988, committing to administer the New Source Review provisions of their regulations, consistent with EPA's requirements. These commitments apply to the issuance of, or revision to, permits for any source which is a major stationary source or major modification as defined in the Code of Federal Regulations, part 51, subpart I.

(C) Addendum to MAG 1987 Carbon Monoxide Plan for the Maricopa County Nonattainment Area, July 21, 1988 (supplemental information related to the SIP revision of July 18, 1988).

(D) Commitment in the July 22, 1988 submittal letter to apply the oxygenated fuels program of the July 18, 1988 submittal to Pima County.

(67) Regulations for the Maricopa County Bureau of Air Pollution Control were submitted on January 4, 1990 by the Governor's designee.

(i) Incorporation by reference.

(A) Amended regulations: Regulation II, rule 220 and Regulation III, rule 335, both adopted July 13, 1988.

(B) Amended Maricopa County Division of Air Pollution Control Rule 314, adopted July 13, 1988.

(68) The following amendments to the plan were submitted by the Governor's designee on June 11, 1991.

(i) Incorporation by reference.

(A) Arizona Revised Statutes.

(*1*) House Bill 2181 (approved, May 21, 1991), section 1: Arizona Revised Statute (A.R.S.) 41–2065 (amended); section 2: A.R.S. 41–2083 (amended); section 3: A.R.S. section 41–2122 (amended); section 4: A.R.S. Section 41–2123 (amended); and section 5: A.R.S. section 41–2124 (repealed).

(69) The following amendment to the plan was submitted by the Governor's designee on May 27, 1994.

(i) Incorporation by reference.

(A) Maricopa County Bureau of Air Pollution Control stage II vapor recovery program, adopted on August 27, 1993.

(70) New and amended regulations for the Maricopa County Environmental Services Department—Air Pollution Control were submitted on June 29, 1992, by the Governor's designee.

(i) Incorporation by reference.

(A) New Rules 337, 350, and 351, adopted on April 6, 1992.

(71) New and amended regulations for the following agencies were submitted on August 15, 1994 by the Governor's designee.

(i) Incorporation by reference.

(A) Pinal County Air Quality Control District.

(*1*) Chapter 1, Article 3, section 1–3–140, subsections 5, 15, 21, 32, 33, 35, 50, 51, 58, 59, 103, and 123, adopted on November 3, 1993; Chapter 3, Article 1, section 3–1–081(A)(8)(a), adopted on November 3, 1993; Chapter 3, Article 1, section 3–1–084, adopted on August 11, 1994; and Chapter 3, Article 1, section 3–1–107, adopted on November 3, 1993.

(72) New and amended plans and regulations for the following agencies were submitted on November 13, 1992 by the Governor's designee.

(i) Incorporation by reference.

(A) Arizona Department of Environmental Quality.

(*1*) Small Business Stationary Source Technical and Environmental Compliance Assistance Program, adopted on November 13, 1992.

(B) Maricopa County Environmental Quality and Community Services Agency.

(*1*) Rule 340, adopted on September 21, 1992.

(73) Plan revisions were submitted on August 11, 1993 by the Governor's designee.

(i) Incorporation by reference.

(A) The Maricopa Association of Governments 1991 Particulate Plan for PM_{10} for the Maricopa County Area and 1993 Revisions, Chapters 1, 2, 3, 4, 5, 6, 7, 8, 10 and Appendices A through D, adopted August 11, 1993.

(74) Plan revisions were submitted by the Governor's designee on March 3, 1994.

(i) Incorporation by reference.

(A) Maricopa County Division of Air Pollution Control new Rule 316, adopted July 6, 1993, and revised Rule 311, adopted August 2, 1993.

(B) The Maricopa Association of Governments 1991 Particulate Plan for PM_{10} for the Maricopa County Area and 1993 Revisions, Revised Chapter 9 adopted on March 3, 1994.

(75) Program elements submitted on November 14, 1994, by the Governor's designee.

(i) Incorporation by reference.

(A) Arizona Department of Environmental Quality.

(*1*) Basic and Enhanced Inspection and Maintenance Vehicle Emissions Program. Adopted on September 15, 1994.

(76) Program elements were submitted on February 1, 1995 by the Governor's designee.

(i) Incorporation by reference.

(A) Small Business Stationary Source Technical and Environmental Compliance Assistance Program, adopted on February 1, 1995.

(77) Amended regulations for the following agency were submitted on December 19, 1994, by the Governor's designee.

(i) Incorporation by reference.

(A) Maricopa County Environmental Services Department.

(*1*) Rule 310, adopted on September 20, 1994.

(*2*) Rule 334, adopted on September 20, 1994.

(78) New and amended regulations for the Maricopa County Environmental Services Department—Air Pollution Control were submitted on February 4, 1993, by the Governor's designee.

(i) Incorporation by reference.

(A) New Rule 352, adopted on November 16, 1992.

(79) New and amended regulations for the following agencies were submitted on June 29, 1992 by the Governor's designee.

(i) Incorporation by reference.

(A) Maricopa County Environmental Quality and Community Services Agency.

(*1*) Rule 353, adopted on April 6, 1992.

(80) New and amended regulations for the following agencies were submitted on August 10, 1992 by the Governor's designee.

(i) Incorporation by reference.

(A) Maricopa County Environmental Quality and Community Services Agency.

(*1*) Rules 331 and 333, adopted on June 22, 1992.

(81) Amended regulation for the following agency was submitted on August 16, 1994, by the Governor's designee.

(i) Incorporation by reference.

(A) Maricopa County Environmental Services Department.

(*1*) Rule 341, adopted on August 5, 1994.

(82)–(83) [Reserved]

(84) Amended regulations for the Pinal County Air Quality Control District were submitted on November 27, 1995, by the Governor's designee.

(i) Incorporation by reference.

(A) Pinal County Air Quality Control District Code of Regulations: Chapter 1, Articles 1 through 3; Chapter 2, Articles 1 through 7; Chapter 3, Articles 1, 2, and the following sections of Article 3, Section 200, Section 203, Section 205, Section 210, Section 250, Section 260, Section 270, Section 275, and Section 280. Adopted on October 12, 1995.

[37 FR 10849, May 31, 1972]

EDITORIAL NOTE: For FEDERAL REGISTER citations affecting §52.120, see the List of CFR Sections Affected in the Finding Aids section of this volume.

§52.121 Classification of regions.

The Arizona plan is evaluated on the basis of the following classifications:

AQCR (constituent counties)	Classifications				
	PM	SO_X	NO_2	CO	O_3
Maricopa Intrastate (Maricopa)	I	III	III	I	I
Pima Intrastate (Pima)	I	II	III	III	I
Northern Arizona Intrastate (Apache, Coconino, Navajo, Yavapai)	I	III	III	III	III
Mohave-Yuma Intrastate (Mohave, Yuma)	I	III	III	III	III
Central Arizona Intrastate (Gila, Pinal)	I	IA	III	III	III
Southeast Arizona Intrastate (Cochise, Graham, Greenlee, Santa Cruz)	I	IA	III	III	III

[45 FR 67345, Oct. 10, 1980]

§52.122 [Reserved]

§52.123 Approval status.

(a) With the exceptions set forth in this subpart, the Administrator approved Arizona's plan for the attainment of the national standards.

(b) With the exception set forth in §§52.130 and 52.135, the Administrator approves the inspection and maintenance (I/M) program for motor vehicles; the carpool matching program; certain transit improvements; and certain traffic flow improvement and site-specific traffic control measures.

(c) With the exceptions set forth in this subpart, the Administrator approves the plan with respect to Part D, Title I of the Clean Air Act, as amended in 1977, for the nonattainment areas listed in this paragraph.

(1) For TSP, the portion of the Tucson TSP Air Planning Area falling both within the area described by connecting the geographic points in the order listed below in this paragraph and within the townships and sections described below in this paragraph:

Latitude 32°38.5′ N, Longitude 111°24.0′ W
Latitude 32°26.5′ N, Longitude 110°47.5′ W
Latitude 32°12.5′ N, Longitude 110°32.5′ W
Latitude 31°49.5′ N, Longitude 110°25.5′ W
Latitude 31°42.0′ N, Longitude 110°50.5′ W
Latitude 31°52.5′ N, Longitude 111°12.5′ W
Latitude 31°24.5′ N, Longitude 111°29.0′ W
(and return to initial point)

T9S, R9–11E
T10S, R9–13E
T13S, R13E: sections 5, 8–10, 13–17, 20–28, 33–36, 6 (NE and SE quarters only) and 7 (NE and SE quarters only)
T13S, R14E: sections 19–21, 26–35
T14S, R13E: sections 1–3, 10–14, 23–25
T14S, R14E: sections 3–9, 17–19, 30
T17S, R19E
T18S, R19E
T20S, R14–15E

(d) With the exceptions set forth in this subpart, the Administrator approves the plan with respect to Part D, Title I of the Clean Air Act, as amended in 1977, for the nonattainment areas listed in this paragraph. In addition, continued satisfaction of the requirements of Part D for the ozone portion of the State Implementation Plan (SIP) depends on the adoption and submittal by January 1, 1981, of reasonably available control technology (RACT) requirements for sources covered by Control Technique Guidelines (CTG's) published between January 1978 and January 1979.

(1) Maricopa County Urban Planning Area for O_3.

(e) The Administrator finds that the plan does not satisfy all the requirements of Part D, Title I, of the Clean Air Act as amended in 1977 for the nonattainment and area pollutants listed in this paragraph.

(1) Maricopa County Urban Planning Area for CO and TSP.

(2) Tucson CO Air Planning Area for CO.

(3) The following portion of the Tucson TSP Air Planning Area: The area described by connecting the following geographic points in the order listed below:

Latitude 32°38.5′ N, Longitude 111°24.0′ W
Latitude 32°26.5′ N, Longitude 110°47.5′ W
Latitude 32°12.5′ N, Longitude 110°32.5′ W
Latitude 31°49.5′ N, Longitude 110°25.5′ W
Latitude 31°42.0′ N, Longitude 110°50.5′ W
Latitude 31°52.5′ N, Longitude 111°12.5′ W
Latitude 31°24.5′ N, Longitude 111°29.0′ W
(and return to initial point)

Excluding the area within the following townships:

T9S, R9–11E
T10S, R9–13E
T13S, R13E: sections 5, 8–10, 13–17, 20–28, 33–36, 6 (NE and SE quarters only) and 7 (NE and SE quarters only)
T13S, R14E: sections 19–21, 26–35
T14S, R13E: sections 1–3, 10–14, 23–25
T14S, R14E: sections 3–9, 17–19, 30
T17S, R19E
T18S, R19E
T20S, R14–15E

[38 FR 33373, Dec. 3, 1973, as amended at 48 FR 254, Jan. 4, 1983; 51 FR 3336, Jan. 27, 1986; 51 FR 33750, Sept. 23, 1986]

§ 52.124 Part D disapproval.

(a) The following portions of the Arizona SIP are disapproved because they do not meet the requirements of Part D of the Clean Air Act.

(1) The attainment demonstration, conformity and contingency portions of the 1987 Maricopa Association of Governments Carbon Monoxide Plan and 1988 Addendum.

(2) The attainment demonstration and contingency portions of the 1987 Carbon Monoxide State Implementation Plan Revision for the Tucson Air Planning Area.

(b) (Reserved)

[56 FR 5478, Feb. 11, 1991]

§ 52.125 Control strategy and regulations: Sulfur oxides.

(a)(1) The requirements of subpart G of this chapter are not met since the control strategy does not analyze the impact of smelter fugitive emissions on ambient air quality (except at Hayden, Arizona) in the Central Arizona Intrastate, the Pima Intrastate, and the Southeast Arizona Intrastate (Cochise and Greenlee counties) Regions. Arizona must submit these smelter fugitive emissions control strategies to EPA by August 1, 1984. In addition, the requirements of § 51.281 of this chapter are not met since the plan does not require permanent control of fugitive smelter emissions necessary to attain and maintain the national standards for sulfur oxides. The control strategy for Hayden shows that these controls are required to attain and maintain the national standards, and the fugitive control strategy analyses required above may show that they are required for some or all of the other smelter towns in Arizona. Arizona must submit all fugitive emissions control regulations necessary to attain and maintain the national standards for sulfur oxides to EPA by August 1, 1984. Therefore, the control strategies and regulations

for the six smelter areas in the Central Arizona Intrastate, the Pima Intrastate and the Southeast Arizona Intrastate (Cochise and Greenlee counties) Regions are incomplete due to Arizona's failure to address the fugitive emissions problems at copper smelters.

(2) Regulation 7–1–4.1 (copper smelters) of the Arizona Rules and Regulations for Air Pollution Control, as it pertains to existing copper smelters, is disapproved for the Central Arizona Intrastate, Pima Intrastate and Southeast Arizona Intrastate (Cochise and Greenlee counties) Regions.

(b) The requirements of subpart G and § 51.281 of this chapter are not met since the plan does not provide the degree of control necessary to attain and maintain the national standards for sulfur oxides in the Northern Arizona Intrastate Region. Th erefore, Regulation 7–1–4.2(C) (fuel burning installations) of the Arizona Rules and Regulations for Air Pollution Control, as it pertains to existing sources, is disapproved in the Northern Arizona Intrastate Region for steam power generating instal lations having a total rated capacity equal to or greater than 6,500 million B.t.u. per hour.

(c) *Replacement regulation for Regulation 7–1–4.2(C) (Fossil fuel-fired steam generators in the Northern Arizona Intrastate Region).* (1) This paragraph is applicable to the fossil fuel-fired steam generating equipment designated as Units 1, 2, and 3 at the Navajo Power Plant in the Northern Arizona Intrastate Region (§ 81.270 of this chapter).

(2) No owner or operator of the fossil fuel-fired steam generating equipment to which this paragraph is applicable shall discharge or cause the discharge of sulfur oxides into the atmosphere in excess of the amount prescribed by the following equations:

$$E=12{,}245\ S \text{ or } e=1{,}540\ S$$

where:

E=Allowable sulfur oxides emissions (lb./hr.) from all affected units.

e=Allowable sulfur oxides emissions (gm./sec.) from all affected units.

S=Sulfur content, in percent by weight, prior to any pretreatment of the fuel being burned.

(3) For the purposes of this paragraph:

(i) E shall not exceed 21,270 lb./hr. (2,680 gm./sec.).

(ii) If the sum of sulfur oxides emissions from Units 1, 2, and 3 would be less than 3,780 lb./hr. (475 gm./sec.) without the use of emission control equipment, the requirements of paragraphs (2), (4)(i) and (5) of this paragraph (c), shall not apply for the period of time that the emissions remain below this level.

(iii) The applicability of paragraph (c)(2)(ii) of this section may be determined through a sulfur balance utilizing the analyzed sulfur content of the fuel being burned and the total rate of fuel consumption in all affected units.

(4)(i) No owner or operator of the fossil fuel-fired steam generating equipment subject to this paragraph shall discharge or cause the discharge of sulfur oxides into the atmosphere from any affected unit in excess of the amount prescribed by the following equations, except as provided in paragraph (3)(ii) of this paragraph (c).

$$E_1=0.333\ E \text{ or } e_1=0.333\ e$$

where:

E=Allowable sulfur oxides emissions (lb./hr.) from all affected units as determined pursuant to paragraph (2) of this paragraph.

e=Allowable sulfur oxides emissions (gm./sec.) from all affected units as determined pursuant to paragraph (2) of this paragraph (c).

E_1=Allowable sulfur oxides emissions (lb./hr.) from each affected unit.

e_1=Allowable sulfur oxides emissions (gm./sec.) from each affected unit.

(ii) The owner or operator of the fossil fuel-fired steam generating equipment to which this paragraph is applicable may submit a request to redesignate the allowable emissions specified in paragraph (c)(4)(i) of this section. Such a request shall be submitted no later than December 2, 1974, and shall demonstrate that sulfur oxides emissions on a total plant basis will not exceed those specified in paragraphs (2) and (3)(i) of this paragraph (c). Upon receipt and evaluation of such request, the Administrator shall consider such and if appropriate, redesignate the allowable emissions specified in paragraph (c)(4)(i) of this section.

(5) All sulfur oxides control equipment at the fossil fuel-fired steam generating equipment to which this paragraph is applicable shall be operated at the maximum practicable efficiency at all times, without regard to the allowable sulfur oxides emissions, determined according to paragraph (2) or (3) of this paragraph (c), except as provided in paragraph (3)(ii) of this paragraph (c).

(6) Compliance with this paragraph shall be in accordance with the provisions of § 52.134(a).

(7) The test methods and procedures used to determine compliance with this paragraph shall be those prescribed in § 60.46(c)(2) and (c)(4) of this chapter. The test methods for determining the sulfur content of fuel shall be those specified in § 60.45(c) and (d) of this chapter.

(d)–(e) [Reserved]

(f)(1) Paragraphs B through E of regulation 7–1–4.2 (R9–3–402) (Sulfur Emissions: Fuel Burning Installations) of the Arizona Air Pollution Control Regulations are disapproved because they could allow existing oil fired facilities to use dispersion dependent techniques alone as a means of attaining and maintaining the national ambient air quality standards. The regulation does not assure the attainment and maintenance of the national standards in a manner which is consistent with the intent of sections 110(a)(2)(B) and 123(a)(2) of the Clean Air Act.

(2) The approval of paragraphs A and F of regulation 7–1–4.2 as to coal fired facilities does not apply to the Salt River Project Agricultural Improvement and Power District-Navajo Generating Station.

(3) Paragraphs B through E of regulation 8–1–4.2 (Sulfur Emissions—Fuel Burning Installations) of the Yuma County Air Pollution Control Regulations are disapproved because they could allow existing facilities to use dispersion dependent techniques alone as a means of attaining and maintaining the National Ambient Air Quality Standards. This regulation does not assure the attainment and maintenance of the national standards in a manner which is consistent with the intent of sections 110(a)(2)(B)and 123(a)(2) of the Clean Air Act.

(g) Section 3, Regulation 3 (Sulfur from Primary Copper Smelters) of the Mohave County Health Department Air Pollution Control Regulations and Regulation 7–3–2.1 (Copper Smelters) of the Pinal-Gila Counties Air Quality Control District are disapproved since Section 36–1706 of the Arizona Revised Statutes grants exclusive jurisdiction to the Arizona Department of Health Services and the State Hearing Board over all existing copper smelters.

(1) The requirements of § 51.13 of this chapter are not met since the plan does not demonstrate that the emission limitations applicable to existing fuel burning equipment producing electrical energy will provide for the attainment and maintenance of the national standards in the Pima Intrastate Region (§ 81.269 of this chapter).

(2) Regulation II: Rule 7A—paragraphs 2 through 5, Emission Limitations Fuel Burning Equipment—Sulfur Dioxide, of the Rules and Regulations of the Pima County Air Pollution Control District are disapproved because they could allow existing facilities to use dispersion dependent techniques along as a means of attaining and maintaining the National Ambient Air Quality Standards. The regulation does not assure the attainment and maintenance of the national standards in a manner which is consistent with the intent of section 110(a)(2)(B) of the Clean Air Act.

[37 FR 15081, July 27, 1972]

EDITORIAL NOTE: For FEDERAL REGISTER citations affecting § 52.125, see the List of CFR Sections Affected in the Finding Aids section of this volume.

§ 52.126 Control strategy and regulations: Particulate matter.

(a) The requirements of subpart G and § 51.281 of this chapter are not met since the plan does not provide the degree of control necessary to attain and maintain the national standards for particulate matter in Gila, Maricopa, Pima, Pinal, and Santa Cruz Counties. Therefore, Regulation 7–1–3.6 (process industries) of the Arizona Rules and Regulations for Air Pollution Control is disapproved for Gila, Maricopa, Pima, Pinal, and Santa Cruz Counties.

(b) *Replacement regulation for Regulation 7–1–3.6 of the Arizona Rules and Regulations for Air Pollution Control (Gila, Maricopa, Pima, Pinal, and Santa Cruz Counties).* (1) No owner or operator of any stationary process source in Gila, Maricopa, Pima, Pinal, or Santa Cruz County shall discharge or cause the discharge of particulate matter into the atmosphere in excess of the hourly rate shown in the following table for the process weight rate identified for such source:

[In pounds per hour]

Process weight rate	Emission rate	Process weight rate	Emission rate
50	0.36	60,000	29.60
100	0.55	80,000	31.19
500	1.53	120,000	33.28
1,000	2.25	160,000	34.85
5,000	6.34	200,000	36.11
10,000	9.73	400,000	40.35
20,000	14.99	1,000,000	46.72

(2) Paragraph (b)(1) of this section shall not apply to incinerators, fuel burning installations, or Portland cement plants having a process weight rate in excess of 250,000 lb/h.

(3) No owner or operator of a Portland cement plant in Gila, Maricopa, Pima, Pinal, or Santa Cruz County with a process weight rate in excess of 250,000 lb/hr shall discharge or cause the discharge of particulate matter into the atmosphere in excess of the amount specified in §60.62 of this chapter.

(4) Compliance with this paragraph shall be in accordance with the provisions of §52.134(a).

(5) The test methods and procedures used to determine compliance with this paragraph are set forth below. The methods referenced are contained in the appendix to part 60 of this chapter. Equivalent methods and procedures may be used if approved by the Administrator.

(i) For each sampling repetition, the average concentration of particulate matter shall be determined by using method 5. Traversing during sampling by method 5 shall be according to method 1. The minimum sampling time shall be 2 hours and the minimum sampling volume shall be 60 ft^3(1.70 m^3), corrected to standard conditions on a dry basis.

(ii) The volumetric flow rate of the total effluent shall be determined by using method 2 and traversing according to method 1. Gas analysis shall be performed using the integrated sample technique of method 3, and moisture content shall be determined by the condenser technique of method 4.

(iii) All tests shall be conducted while the source is operating at the maximum production or combustion rate at which such source will be operated. During the tests, the source shall burn fuels or combinations of fuels, use raw materials, and maintain process conditions representative of normal operation, and shall operate under such other relevant conditions as the Administrator shall specify.

(c) The requirements of §51.281 of this chapter are not met since the plan does not contain regulations for Mohave and Yuma Counties in the Mohave-Yuma Intrastate Region or Pinal-Gila Counties in the Central Arizona Intrastate Region which provide enforceable and reproducible test procedures for the determination of compliance with the emission standards. Therefore paragraph C of section 3, regulation 2 (Particulates: Other Sources) of the Mohave County Air Pollution Control Regulations, paragraph B of regulation 8–1–3.6 (Particulates—Process Industries) of the Yuma County Air Pollution Control Regulations, and paragraph C of regulation 7–3–1.4 (Particulate Emissions—Incineration) and paragraph F of regulation 7–3–1.7 (Particulate Emissions—Fuel Burning Equipment) of the Rules and Regulations for Pinal-Gila Counties Air Quality Control District are disapproved.

[37 FR 15081, July 27, 1972, as amended at 38 FR 12704, May 14, 1973; 43 FR 53034, Nov. 15, 1978; 45 FR 67346, Oct. 10, 1980; 51 FR 40676, 40677, Nov. 7, 1986]

§§52.127—52.128 [Reserved]

§52.129 Review of new sources and modifications.

(a) [Reserved]

(b) *National standards not met.* The requirements of §51.160(a) of this chapter are not met in the Pima Intrastate Region since the Rules and Regulations of the Pima County Air Pollution Control District are not adequate to prevent

construction or modification of a source which would interfere with the attainment or maintenance of the national standards.

(c) *Regulation for review of new sources and modifications.* (1) The requirements of this paragraph are applicable to any stationary source in the Pima Intrastate Region (§ 81.269 of this chapter), the construction or modification of which iscommenced after the effective date of this regulation.

(2) No owner or operator shall commence construction or modification of any new source after the effective date of this regulation without first obtaining approval from the Administrator of the location of such source.

(i) Application for approval to construct or modify shall be made on forms furnished by the Administrator, or by other means prescribed by the Administrator.

(ii) A separate application is required for each source.

(iii) Each application shall be signed by the applicant.

(iv) Each application shall be accompanied by site information, stack data, and the nature and amount of emissions. Such information shall be sufficient to enable the Administrator to make any determination pursuant to paragraph (c)(3) of this section.

(v) Any additional information, plans, specifications, evidence or documentation that the Administrator may require shall be furnished upon request.

(3) No approval to construct or modify will be granted unless the applicant shows to the satisfaction of the Administrator that the source will not prevent or interfere with attainment or maintenance of any national standard.

(4)(i) Within twenty (20) days after receipt of an application to construct, or any addition to such application, the Administrator shall advise the owner or operator of any deficiency in the information submitted in support of the application. In the event of such a deficiency, the date of receipt of the application for the purpose of paragraph (c)(4)(ii) of this section, shall be the date on which all required information is received by the Administrator.

(ii) Within thirty (30) days after receipt of a complete application, the Administrator shall:

(*a*) Make a preliminary determination whether the source should be approved, approved with conditions, or disapproved.

(*b*) Make available in at least one location in each region in which the proposed source would be constructed, a copy of all materials submitted by the owner or operator, a copy of the Administrator's preliminary determination and a copy or summary of other materials, if any, considered by the Administrator in making his preliminary determination; and

(*c*) Notify the public, by prominent advertisement in a newspaper of general circulation in each region in which the proposed source would be constructed, of the opportunity for written public comment on the information submitted by the owner or operator and the Administrator's preliminary determination on the approvability of the source.

(iii) A copy of the notice required pursuant to this paragraph shall be sent to the applicant and to state and local air pollution control agencies, having cognizance over the location where the source will be situated.

(iv) Public comments submitted in writing within thirty (30) days after the date such information is made available shall be considered by the Administrator in making his final decision on the application. No later than ten (10) days after the closeof the public comment period, the applicant may submit a written response to any comment submitted by the public. The Administrator shall consider the applicant's response in making his final decision. All comments shall be made available for public inspection in at least one location in the region in which the source would be located.

(v) The Administrator shall take final action on an application within thirty (30) days after the close of the public comment period. The Administrator shall notify the applicant in writing of his approval, conditional approval, or denial of the application, and shall set forth his reasons for conditional approval or denial. Such notification shall be made available for public inspection in at least one location in the region in which the source would be located.

(vi) The Administrator may extend each of the time periods specified in paragraph (c)(4) (ii), (iv) or (v) of this section by no more than 30 days, or such other period as agreed to by the applicant and the Administrator.

(5) The Administrator may cancel an approval if the construction is not begun within 2 years from the date of issuance, or if during the construction, work is suspended for 1 year.

(6) Approval to construct or modify shall not relieve any owner or operator of the responsibility to comply with any local, State or Federal regulation which is part of the applicable plan.

(7) Approval to construct or modify shall not be required for:

(i) The installation or alteration of an air pollutant detector, air pollutants recorder, combustion controller, or combustion shutoff.

(ii) Airconditioning or ventilating systems not designed to remove air pollutants generated by or released from equipment.

(iii) Fuel burning equipment, other than smokehouse generators, which has a heat input of not more than 250 MBtu/h (62.5 billion g-cal/h) and burns only gaseous fuel containing not more than 20.0 grain H_2S per 100 stdft^3 (45.8 g/100 stdm^3); has a heat input of not more than 1 MBtu/h (250 Mg-cal/h) and burns only distillate oil; or has a heat input of not more than 350,000 Btu/h (88.2 Mg-cal/h) and burns any other fuel.

(iv) Mobile internal combustion engines.

(v) Laboratory equipment used exclusively for chemical or physical analysis.

(vi) Other sources of minor significance specified by the Administrator.

(8) Any owner or operator who constructs, modifies, or operates a stationary source not in accordance with the application, as approved and conditioned by the Administrator, or any owner or operator of a stationary source subject to this paragraph who commences construction or modification without applying for and receiving approval hereunder, shall be subject to enforcement action under section 113 of the Act.

(d) *Regulation for review of new sources and modifications: Federal Regulations.* (1) This requirement is applicable to any stationary source subject to the requirements of § 52.126(b), the construction or modification of which is commenced after the effective date of this regulation.

(2) No owner or operator shall commence construction or modification of any stationary source after the effective date of this regulation, without first obtaining approval from the Administrator of the location and design of such source.

(i) Application for approval to construct or modify shall be made on forms furnished by the Administrator, or by other means prescribed by the Administrator.

(ii) A separate application is required for each source.

(iii) Each application shall be signed by the applicant.

(iv) Each application shall be accompanied by site information, plans, descriptions, specifications, and drawings showing the design of the source, the nature and amount of emissions, and the manner in which it will be operated and controlled.

(v) Any additional information, plans, specifications, evidence, or documentation that the Administrator may require shall be furnished upon request.

(3) No approval to construct or modify will be granted unless the applicant shows to the satisfaction of the Administrator that the source will operate without causing a violation of § 52.126(b).

(4)(i) Within twenty (20) days after receipt of an application to construct, or any addition to such application, the Administrator shall advise the owner or operator of any deficiency in the information submitted in support of the application. In the event of such a deficiency, the date of receipt of the application for the purpose of paragraph (d)(4)(ii) of this section, shall be the date on which all required information is received by the Administrator.

(ii) Within thirty (30) days after receipt of a complete application, the Administrator shall:

(*a*) Make a preliminary determination whether the source should be approved, approved with conditions, or disapproved.

(*b*) Make available in at least one location in each region in which the proposed source would be constructed, a copy of all materials submitted by the owner or operator, a copy of the Administrator's preliminary determination and a copy or summary of other materials, if any, considered by the Administrator in making his preliminary determination; and

(*c*) Notify the public, by prominent advertisement in a newspaper of general circulation in each region in which the proposed source would be constructed, of the opportunity for written public comment on the information submitted by the owner or operator and the Administrator's preliminary determination on the approvability of the source.

(iii) A copy of the notice required pursuant to this paragraph shall be sent to the applicant and to state and local air pollution control agencies, having cognizance over the location where the source will be situated.

(iv) Public comments submitted in writing within thirty (30) days after the date such information is made available shall be considered by the Administrator in making his final decision on the application. No later than ten (10) days after the close of the public comment period, the applicant may submit a written response to any comment submitted by the public. The Administrator shall consider the applicant's response in making his final decision. All comments shall be made available for public inspection in at least one location in the region in which the source would be located.

(v) The Administrator shall take final action on an application within thirty (30) days after the close of the public comment period. The Administrator shall notify the applicant in writing of his approval, conditional approval, or denial of the application, and shall set forth his reasons for conditional approval or denial. Such notification shall be made available for public inspection in at least one location in the region in which the source would be located.

(vi) The Administrator may extend each of the time periods specified in paragraph (d)(4)(ii), (iv) or (v) of this section by no more than 30 days, or such other period as agreed to by the applicant and the Administrator.

(5) The Administrator may impose any reasonable conditions upon an approval including conditions requiring the source to be provided with:

(i) Sampling ports of a size, number, and location as the Administrator may require,

(ii) Safe access to each port,

(iii) Instrumentation to monitor and record emission data, and

(iv) Any other sampling and testing facilities.

(6) The Administrator may cancel an approval if the construction is not begun within 2 years from the date of issuance, or if during the construction, work is suspended for 1 year.

(7) Any owner or operator subject to the provisions of this regulation shall furnish the Administrator written notification as follows:

(i) A notification of the anticipated date of initial startup of source not more than 60 days or less than 30 days prior to such date.

(ii) A notification of the actual date of initial startup of a source within 15 days after such date.

(8) Within 60 days after achieving the maximum production rate at which the source will be operated but not later than 180 days after initial startup of such source, the owner or operator of such source shall conduct a performance test(s) in accordance with the methods and under operating conditions approved by the Administrator and furnish the Administrator a written report of the results of such performance test.

(i) Such test shall be at the expense of the owner or operator.

(ii) The Administrator may monitor such test and also may conduct performance tests.

(iii) The owner or operator of a source shall provide the Administrator 15 days prior notice of the performance test to afford the Administrator the opportunity to have an observer present.

(iv) The Administrator may waive the requirement for performance tests if the owner or operator of a source has demonstrated by other means to the Administrator's satisfaction that the

source is being operated in compliance with the requirements of §52.126(b).

(9) Approval to construct or modify shall not relieve the owner or operator of the responsibility to comply with all local, State, or Federal regulations which are part of the applicable plan.

(10) Approval to construct or modify shall not be required for:

(i) The installation or alteration of an air pollutant detector, air pollutants recorder, combustion controller, or combustion shutoff.

(ii) Air-conditioning or ventilating systems not designed to remove air pollutants generated by or released from equipment.

(iii) Fuel burning equipment, other than smokehouse generators, which has a heat input of not more than 250 MBtu/h (62.5 billion g-cal/h) and burns only gaseous fuel containing not more than 20.0 grain H_2S per 100 stdft^3 (45.8 g/100 stdm^3); has a heat input of not more than 1 MBtu/h (250 Mg-cal/h) and burns only distillate oil; or has a heat input of not more than 350,000 Btu/h (88.2 Mg-cal/h) and burns any other fuel.

(iv) Mobile internal combustion engines.

(v) Laboratory equipment used exclusively for chemical or physical analyses.

(vi) Other sources of minor significance specified by the Administrator.

(11) Any owner or operator who constructs, modifies, or operates a stationary source not in accordance with the application, as approved and conditioned by the Administrator, or any owner or operator of a stationary source subject to this paragraph who commences construction or modification without applying for and receiving approval hereunder, shall be subject to enforcement action under section 113 of the Act.

(e) *Delegation of authority*. (1) The Administrator shall have the authority to delegate responsibility for implementing the procedures for conducting source review pursuant to this section in accordance with paragraphs (g) (2), (3), and (4) of this section.

(2) Where the Administrator delegates the responsibility for implementing the procedures for conducting source review pursuant to this section to any Agency, other than a Regional Office of the Environmental Protection Agency, a copy of the notice pursuant to paragraphs (c)(4)(iii) and (d)(4)(iii) of this section shall be sent to the Administrator through the appropriate Regional Office.

(3) In accordance with Executive Order 11752, the Administrator's authority for implementing the pro cedures for conducting source review pursuant to this section shall not be delegated, other than to a Regional Office of the Environmental Protection Agency, for new or modified sources which are owned or operated by the Federal government or for new or modified sources located on Federal lands; except that, with respect to the latter category, where new or modified sources are constructed or operated on Federal lands pursuant to leasing or other Federal agreements, the Federal Land Manager may at his discretion, to the extent permissible under applicable statutes and regulations, require the lessee or permittee to be subject to new source review requirements which have been delegated to a state or local agency pursuant to this paragraph.

(4) The Administrator's authority for implementing the procedures for conducting source review pursuant to this section shall not be redelegated, other than to a Regional Office of the Environmental Protection Agency, for new or modified sources which are located in Indian reservations except where the State has assumed jurisdiction over such land under other laws, in which case the Administrator may delegate his authority to the States in accordance with paragraphs (g)(2), (3), and (4) of this section.

[37 FR 15081, July 27, 1972, as amended at 38 FR 12705, May 14, 1973; 39 FR 7279, Feb. 25, 1974; 39 FR 28285, Aug. 8, 1974; 40 FR 50268, Oct. 29, 1975; 45 FR 67346, Oct. 10, 1980; 51 FR 40677, Nov. 7, 1986; 60 FR 33922, June 29, 1995]

§52.130 Source surveillance.

(a) The requirements of §51.211 of this chapter are not met since the plan does not contain legally enforceable procedures for requiring sources in the Northern Arizona, Mohave-Yuma, Central Arizona, and Southeast Arizona Intrastate Regions to maintain

records of and periodically report on the nature and amounts of emissions.

(b) The requirements of § 51.213 of this chapter are not met because the plan does not provide procedures for obtaining and maintaining data on actual emission reductions achieved as a result of implementing transportation control measures.

(c) *Regulation for source recordkeeping and reporting.* (1) The owner or operator of any stationary source in the Northern Arizona, Mohave-Yuma, Central Arizona, or Southeast Arizona Intrastate Region (§§ 81.270, 81.268, 81.271, and 81.272 of this chapter) shall, upon notification from the Administrator, maintain records of the nature and amounts of emissions from such source or any other information as may be deemed necessary by the Administrator to determine whether such source is in compliance with applicable emission limitations or other control measures.

(2) The information recorded shall be summarized and reported to the Administrator, and shall be submitted within 45 days after the end of the reporting period. Reporting periods are January 1 to June 30 and July 1 to December 31, except that the initial reporting period shall commence on the date the Administrator issues notification of the recordkeeping requirements.

(3) Information recorded by the owner or operator and copies of the summarizing reports submitted to the Administrator shall be retained by the owner or operator for 2 years after the date on which the pertinent report is submitted.

(4) Emission data obtained from owners or operators of stationary sources will be correlated with applicable emission limitations and other control measures. All such emission data will be available during normal business hours at the regional office (region IX). The Administrator will designate one or more places in Arizona where such emission data and correlations will be available for public inspection.

(d) The requirements of § 51.214 of this chapter are not met since the plan does not contain legally enforceable procedures for requiring certain stationary sources subject to emission standards to install, calibrate, operate, and maintain equipment for continuously monitoring and recording emissions, and to provide other information as specified in Appendix P of part 51 of this chapter.

(e) The requirements of § 51.214 of this chapter are not met since the plan does not provide sufficient regulations to meet the minimum specifications of Appendix P in the Maricopa Intrastate Region. Additionally, Maricopa County Air Pollution Control Regulation IV, rule 41, paragraph B, sections 6.0–6.4 (Special Consideration) is disapproved since it does not contain the specific criteria for determining those physical limitations or extreme economic situations where alternative monitoring requirements would be applicable.

[37 FR 15081, July 27, 1972]

EDITORIAL NOTE: For FEDERAL REGISTER citations affecting § 52.130, see the List of CFR Sections Affected in the Finding Aids section of this volume.

§§ 52.131—52.132 [Reserved]

§ 52.133 Rules and regulations.

(a) Regulation 7–1–1.4(A) (Exceptions) of the Arizona Rules and Regulations for Air Pollution Control, regulations 12–3–2 (Emission Standards) of the Coconino County Rules and Regulations for Air Pollution Control, section 3, regulation 5 (Exceptions) of the Mohave County Air Pollution Control Regulations, regulation 8–1–1.6 (Exceptions) of the Yuma County Air Pollution Control Regulations, and regulation 7–1–2.8 (Exceptions) of the Rules and Regulations for Pinal-Gila Counties Air Quality Control District all provide for an exemption from enforcement action if the violation is attributable to certain events. These events are too broad in scope and the source can obtain the exemption merely by reporting the occurrence. Therefore, the above regulations are disapproved since these regulations make all approved emission limiting regulations potentially unenforceable.

(b) Paragraph E of regulation 7–1–1.3 (R9–3–103) (Air Pollution Prohibited) prohibits any person from causing ground level concentrations to exceed ambient standards outside the boundaries of this operation. This regulation could allow violations of ambient air

quality standards to occur in areas to which the public has access, contrary to the requirements of section 110(a)(1) of the Clean Air Act. Therefore, paragraph E of regulation 7–1–1.3 (R9–3–103) of the Arizona Rules and Regulations for Air Pollution Control is disapproved.

(c) The requirements of subpart G and §51.281 of this chapter are not met since the plan does not provide any enforceable regulations and a demonstration that such regulations will cause the attainment and maintenance of national ambient air quality standards in Graham and Greenlee Counties.

(d) Section 3, regulation 4 (Ground Level Concentrations) of the Mohave County Air Pollution Control Regulations, paragraph E of regulation 8–1–1.3 (Air Pollution Prohibited) of the Yuma County Air Pollution Control Regulations, and paragraph C of regulation 7–1–1.3 (Air Pollution Prohibited) of the Rules and Regulations for Pinal-Gila Counties Air Quality Control District prohibits any person from causing ground level concentrations to exceed ambient standards outside the boundaries of hisoperation. These regulations could allow violations of ambient air quality standards to occur in areas to which the general public has access, contrary to the requirements of section 110(a)(1) of the Clean Air Act. Therefore, these regulations are disapproved.

[37 FR 15082, July 27, 1972, as amended at 43 FR 33247, July 31, 1978; 43 FR 53035, Nov. 15, 1978; 51 FR 40676, 40677, Nov. 7, 1986]

§52.134 Compliance schedules.

(a) *Federal compliance schedule.* (1) Except as provided in paragraph (a)(2) of this section, the owner or operator of any stationary source subject to §52.126(b) shall comply with such regulation on or before January 31, 1974. The owner or operator of the source subject to §52.125(c) shall comply with such regulation at initial start-up of such source unless a compliance schedule has been submitted pursuant to paragraph (a)(2) of this section.

(i) Any owner or operator in compliance with §52.126(b) on the effective date of this regulation shall certify such compliance to the Administrator no later than 120 days following the effective date of this paragraph.

(ii) Any owner or operator who achieves compliance with §52.125(c) or §52.126(b) after the effective date of this regulation shall certify such compliance to the Administrator within 5 days of the date compliance is achieved.

(2) Any owner or operator of the stationary source subject to §52.125(c) and paragraph (a)(1) of this section may, no later than July 23, 1973, submit to the Administrator for approval a proposed compliance schedule that demonstrates compliance with §52.125(c) as expeditiously as practicable but not later than July 31, 1977. Any owner or operator of a stationary source subject to §52.126(b) and paragraph (a)(1) of this section may, no later than 120 days following the effective date of this paragraph, submit to the Administrator for approval a proposed compliance schedule that demonstrates compliance with §52.126(b) as expeditiously as practicable but not later than July 31, 1975.

(i) The compliance schedule shall provide for periodic increments of progress toward compliance. The dates for achievement of such increments shall be specified. Increments of progress shall include, but not be limited to: Submittal of the final control plan to the Administrator; letting of necessary contracts for construction or process change, or issuance of orders for the purchase of component parts to accomplish emission control equipment or process modification; completion of onsite construction or installation of emission control equipment or process modification; and final compliance.

(ii) Any compliance schedule for the stationary source subject to §52.125(c) which extends beyond July 31, 1975, shall apply any reasonable interim measures of control designed to reduce the impact of such source on public health.

(3) Any owner or operator who submits a compliance schedule pursuant to this paragraph shall, within 5 days after the deadline for each increment

of progress, certify to the Administrator whether or not the required increment of the approved compliance schedule has been met.

[38 FR 12705, May 14, 1973, as amended at 39 FR 10584, Mar. 21, 1974; 39 FR 43277, Dec. 12, 1974; 40 FR 3994, Jan. 27, 1975; 54 FR 25258, June 14, 1989]

§ 52.135 Resources.

(a) The requirements of § 51.280 of this chapter are not met because the transportation control plan does not contain a sufficient description of resources available to the State and local agencies and of additional resources needed to carry out the plan during the 5-year period following submittal.

[38 FR 16564, June 22, 1973, as amended at 51 FR 40677, Nov. 7, 1986]

§ 52.136 Control strategy for ozone: Oxides of nitrogen.

EPA is approving an exemption request submitted by the State of Arizona on April 13, 1994 for the Maricopa County ozone nonattainment area from the NO_X RACT requirements contained in section 182(f) of the Clean Air Act. This approval exempts the Phoenix area from implementing the NO_X requirements for RACT, new source review (NSR), and the applicable general and transportation conformity and inspection and maintenance (I/M) requirements of the CAA. The exemption is based on Urban Airshed Modeling as lasts for only as long as the area's modeling continues to demonstrate attainment without NO_X reductions from major stationary sources.

[60 FR 19515, Apr. 19, 1995]

§ 52.137 [Reserved]

§ 52.138 Conformity procedures.

(a) *Purpose.* The purpose of this regulation is to provide procedures as part of the Arizona carbon monixide implementation plans for metropolitan transportation planning organizations (MPOs) to use when determining conformity of transportationplans, programs, and projects. Section 176(c) of the Clean Air Act (42 U.S.C. 7506(c)) prohibits MPOs from approving any project, program, or plan which does not conform to an implementation plan approved or promulgated under section 110.

(b) *Definitions.*

(1) *Applicable implementation plan* or *applicable plan* means the portion (or portions) of the implementation plan, or most recent revision thereof, which has been approved under section 110 of the Clean Air Act, 42 U.S.C. 7410, or promulgated under section 110(c) of the CAA, 42 U.S.C. 7410(c).

(2) *Carbon monoxide national ambient air quality standard (CO NAAQS)* means the standards for carbon monoxide promulgated by the Administrator under section 109, 42 U.S.C. 7409, of the Clean Air Act and found in 40 CFR 50.8

(3) *Cause* means resulting in a violation of the CO NAAQS in an area which previously did not have ambient CO concentrations above the CO NAAQS.

(4) *Contribute* means resulting in measurably higher average 8-hour ambient CO concentrations over the NAAQS or an increased number of violations of the NAAQS in an area which currently experiences CO levels above the standard.

(5) *Metropolitan planning organization (MPO)* means the organization designated under 23 U.S.C. 134 and 23 CFR part 450.106. For the specific purposes of this regulation, MPO means either the Maricopa Association of Governments or the Pima Association of Governments.

(6) *Nonattainment area* means for the specific purpose of this regulation either the Pima County carbon monoxide nonattainment area as described in 40 CFR 81.303 or the Maricopa County carbon monoxide nonattainment area as described in 40 CFR 81.303 (i.e., the MAG urban planning area).

(7) *Transportation control measure (TCM)* means any measure in an applicable implementation plan which is intended to reduce emissions from transportation sources.

(8) *Transportation improvement program (TIP)* means the staged multiyear program of transportation improvements including an annual (or biennial) element which is required in 23 CFR part 450.

(9) *Unified planning work program* or *UPWP* means the program required by 23 CFR 450.108(c) and endorsed by the metropolitan planning organization

which describes urban transportation and transportation-related planning activities anticipated in the area during the next 1- to 2-year period including the planning work to be performed with federal planning assistance and with funds available under the Urban Mass Transportation Act (49 U.S.C.) section 9 or 9A. UPWPs are also known as overallwork programs or OWPs.

(c) *Applicability*. These procedures shall apply only to the Maricopa Association of Governments in its role as the designated metropolitan planning organization for Maricopa County, Arizona, and the Pima Association of Governments in its role as the designated metropolitan planning organization for Pima County, Arizona.

(d) *Procedures.*

(1) *Transportation Plans and Transportation Improvement Programs.*

(i) *Documentation*. The MPO shall prepare for each transportation plan and program (except for the unified planning work program), as part of the plan or program, a report documenting for each plan and program the following information:

(A) the disaggregated population projections and employment which were assumed in:

(*1*) the applicable plan, and

(*2*) the transportation plan/program;

(B) the levels of vehicle trips, vehicle miles traveled, and congestion that were:

(*1*) assumed in the applicable plan, and

(*2*) expected to result from the implementation of the plan/program over the period covered by the applicable plan considering any growth likely to result from the implementation of the plan/program;

(C) for each major transportation control measure in the applicable implementation plan;

(*1*) the TCM's implementation schedule and, if determined in the applicable plan, expected effectiveness in reducing CO emissions,

(*2*) the TCM's current implementation status and, if feasible, its current effectiveness in reducing CO emissions, and

(*3*) actions in the plan/program which may beneficially or adversely affect the implementation and/or effectiveness of the TCM;

(D) the CO emission levels resulting from the implementation of the plan/program over the period covered by the applicable plan considering any growth likely to result from the implementation of the plan/program; and

(E) the ambient CO concentration levels, micro-scale and regional, resulting from the implementation of the plan/program over the period covered by the applicable plan considering any growth likely to result from the implementation of the plan or program.

(ii) *Findings*. Prior to approving a transportation plan/program, the MPO shall determine if the plan/program conforms to the applicable implementation plan. In making this determination, the MPO shall make and support each of the following findings for each transportation plan and program using the information documented in paragraph (d)(1)(i) of this section:

(A) that implementation of the transportation plan/program will provide for the implementation of TCMs in the applicable plan on the schedule set forth in the applicable plan;

(B) that CO emission levels, microscale and regional, resulting from the implementation of the plan/program will not delay attainment or achievement of any interim emission reductions needed for attainment and/or interfere with maintenance of the CONAAQS throughout the nonattainment area during the period covered by the applicable plan; and

(C) that implementation of the plan/program would not cause or contribute to a violation of the CO NAAQS anywhere within the nonattainment area during the period covered by the applicable plan.

(2) *Amendments to a Transportation Plan or Transportation Implementation Program*. Prior to approving any amendment to a transportation plan or program, the MPO shall first determine that the amendment does not substantially change the information provided under paragraph (d)(1)(i) of this section and does not change the findings in paragraph (d)(1)(ii) of this section with respect to the original plan or program.

(3) *Transportation Projects.* As part of any individual transportation project approval made by the MPO, the MPO shall determine whether the project conforms to the applicable implementation plan using the following procedure:

(i) For projects from a plan and TIP that has been found to conform under procedures in paragraph (d)(1) of this section within the last three years or from a Plan or TIP amendment that has been found to conform under procedures in paragraph (d)(2) of this section in the past three years, the MPO shall document as part of the approval document:

(A) the TIP project number;

(B) whether the project is an exempt project as defined in paragraph (e) of this section; and

(C) whether the design and scope of the project has changed significantly from the design and scope of the project as described in the conforming TIP:

(*1*) If the design and scope of the project has not changed significantly, the MPO may find the project conforming; or

(*2*) If the design and scope of the project has changed significantly or the design and scope of the project could not be determined from the TIP, the MPO shall use the procedures in paragraph (d)(3)(ii) of this section to determine if the project conforms to the applicable implementation plan.

(ii) For projects not exempted under paragraph (e) of this section and not in a plan or a TIP that has been found to conform under procedures in paragraph (d)(1) of this section within the last three years:

(A) *Documentation.* The MPO shall document as part of the approval document for each such project:

(*1*) the disaggregated population and employment projections, to the extent they are used in

(*i*) the applicable plan, and

(*ii*) designing and scoping the project;

(*2*) the levels of vehicle trips, vehicle miles traveled, and congestion that are

(*i*) assumed in the applicable plan, and

(*ii*) expected to result over the period covered by the applicable plan from the construction of the project considering any growth likely to result from the project;

(*3*) for each transportation control measure in the applicable plan likely to be affected by the project:

(*i*) its implementation schedule and expected emission reduction effectiveness from the applicable plan,

(*ii*) its current implementation status and, if feasible, its current effectiveness, and

(iii) any actions as part of the project which may beneficially or adversely affect the implementation and/or effectiveness of the TCM;

(*4*) CO emission levels which will result from the project over the period covered by the applicable plan considering any growth likely to result from the project; and

(*5*) ambient CO concentration levels which will result from the project over the period covered by the applicable plan considering any growth likely to result from the project.

(B) *Findings.* Prior to approving any transportation project, the MPO shall determine if the project conforms to the applicable implementation plan. In making this determination, the MPO shall make and support the following findings for each project using the information documented in paragraph (d)(2)(ii)(A) of this section:

(*1*) that the project will provide for the implementation of TCMs affected by the project on the schedule set forth in the applicable plan;

(*2*) that CO emission levels, microscale and regional, resulting from the implementation of the project during the period covered by the applicable plan will not delay attainment or any required interim emission reductions and/or interfere with maintenance of the CO NAAQS in an area substantially affected by the project;

(*3*) that the project will not cause or contribute to a violation of the CO NAAQS during the period covered by the applicable plan near the project; and

(*4*) that the projected emissions from the project, when considered together with emissions projected for the conforming plan and program within the nonattainment area, do not cause the

plan and program to exceed the emission reduction projections and schedules assigned to such plans and programs in the applicable implementation plan.

(e) *Exempt Projects.*

An individual project is exempt from the requirements of paragraph (d) of this section if it is:

(1) located completely outside the nonattainment area;

(2) a safety project which is included in the statewide safety improvement program, will not alter the functional traffic capacity or capability of the facility being improved, and does not adversely affect the TCMs in the applicable plan;

(3) a transportation control measure from the approved applicable plan; or

(4) a mass transit project funded under the Urban Mass Transportation Act, 49 U.S.C.

[56 FR 5485, Feb. 11, 1991]

§52.139 [Reserved]

§52.140 Monitoring transportation trends.

(a) This section is applicable to the State of Arizona.

(b) In order to assure the effectiveness of the inspection and maintenance program and the retrofit devices required under the Arizona implementation plan, the State shall monitor the actual per-vehicle emissions reductions occurring as a result of such measures. All data obtained from such monitoring shall be included in the quarterly report submitted to the Administrator by the State in accordance with §58.35 of this chapter. The first quarterly report shall cover the period January 1 to March 31, 1976.

(c) In order to assure the effective implementation of §§52.137, 52.138, and 52.139, the State shall monitor vehicle miles traveled and average vehicle speeds for each area in which such sections are in effect and during such time periods as may be appropriate to evaluate the effectiveness of such a program. All data obtained from such monitoring shall be included in the quarterly report submitted to the Administrator by the State of Arizona in accordance with §58.35 of this chapter. The first quarterly report shall cover the period from July 1 to September 30, 1974. The vehicle miles traveled and vehicle speed data shall be collected on a monthly basis and submitted in a format similar to Table 1.

TABLE 1

Time period . . . .
Affected area . . . .

Roadway type	VMT or average vehicle speed	
	Vehicle type (1)	Vehicle type (2)[1]
Freeway		
Arterial		
Collector		
Local		

[1] Continue with other vehicle types as appropriate.

(d) No later than March 1, 1974, the State shall submit to the Administrator a compliance schedule to implement this section. The program description shall include the following:

(1) The agency or agencies responsible for conducting, overseeing, and maintaining the monitoring program.

(2) The administrative procedures to be used.

(3) A description of the methods to be used to collect the emission data, VMT data, and vehicle speed data; a description of the geographical area to which the data apply; identification of the location at which the data will be collected; and the time periods during which the data will be collected.

(e) The quarterly reports specified in paragraphs (b) and (c) of this section shall be submitted to the Administrator through the Regional Office, and shall be due within 45 days after the end of each reporting period.

[38 FR 33376, Dec. 3, 1973, as amended at 39 FR 32113, Sept. 5, 1974; 44 FR 27571, May 10, 1979]

§§52.141—52.143 [Reserved]

§52.144 Significant deterioration of air quality.

(a) The requirements of sections 160 through 165 of the Clean Act are not met, since the plan as it applies to stationary sources under the jurisdiction of the Pima County Health Department and the Maricopa County Department of Health Services and stationary sources locating on Indian lands does

not include approvable procedures for preventing the significant deterioration of air quality.

(b) Regulation for preventing significant deterioration of air quality. The provisions of § 52.21 (b) through (w) are hereby incorporated and made a part of the applicable State plan for the State of Arizona for that portion applicable to the Pima County Health Department and the Maricopa County Department of Health Services and sources locating on Indian lands.

[48 FR 19879, May 3, 1983]

§ 52.145 Visibility protection.

(a) The requirements of section 169A of the Clean Air Act are not met, because the plan does not include approvable procedures for protection of visibility in mandatory Class I Federal areas.

(b) Regulations for visibility monitoring and new source review. The provisions of §§ 52.26, 52.27 and 52.28, are hereby incorporated and made part of the applicable plan for the State of Arizona.

(c) *Long-term strategy*. The provisions of § 52.29 are hereby incorporated and made part of the applicable plan for the State of Arizona.

(d) This paragraph is applicable to the fossil fuel-fired, steam-generating equipment designated as Units 1, 2, and 3 at the Navajo Generating Station in the Northern Arizona Intrastate Air Quality Control Region (§ 81.270 of this chapter).

(1) *Definitions.*

Administrator means the Administrator of EPA or his/her designee.

Affected Unit(s) means the steam-generating unit(s) at the Navajo Generating Station, all of which are subject to the emission limitation in paragraph (d)(2) of this section, that has accumulated at least 365 boiler operating days since the passage of the date defined in paragraph (d)(6) of this section applicable to it.

Boiler Operating Day for each of the boiler units at the Navajo Generating Station is defined as a 24-hour calendar day (the period of time between 12:01 a.m. and 12:00 midnight in Page, Arizona) during which coal is combusted in that unit for the entire 24 hours.

Owner or Operator means the owner, participant in, or operator of the Navajo Generating Station to which this paragraph is applicable.

Unit-Week of Maintenance means a period of 7 days during which a fossil fuel-fired steam-generating unit is under repair, and no coal is combusted in the unit.

(2) *Emission limitation*. No owner or operator shall discharge or cause the discharge of sulfur oxides into the atmosphere in excess of 42 ng/J [0.10 pound per million British thermal units (lb/MMBtu)] heat input.

(3) *Compliance determination*. Until at least one unit qualifies as an affected unit, no compliance determination is appropriate. As each unit qualifies for treatment as an affected unit, it shall be included in the compliance determination. Compliance with this emission limit shall be determined daily on a plant-wide rolling annual basis as follows:

(i) For each boiler operating day at each steam generating unit subject to the emission limitation in paragraph (d)(2) of this section, the owner or operator shall record the unit's hourly SO_2 emissions using the data from the continuous emission monitoring systems, [required in paragraph (d)(4) of this section] and the daily electric energy generated by the unit (in megawatt-hours) as measured by the megawatt-hour meter for the unit.

(ii) Compute the average daily SO_2 emission rate in ng/J (lb/MMBtu) following the procedures set out in method 19, appendix A, 40 CFR part 60 in effect on October 3, 1991.

(iii) For each boiler operating day for each affected unit, calculate the product of the daily SO_2 emission rate (computed according to paragraph (d)(3)(ii) of this section) and the daily electric energy generated (recorded according to paragraph (d)(3)(i) of this section) for each unit.

(iv) For each affected unit, identify the previous 365 boiler operating days to be used in the compliance determination. Except as provided in paragraphs (d)(9) and (d)(10) of this section, all of the immediately preceding 365 boiler operating days will be used for compliance determinations.

(v) Sum, for all affected units, the products of the daily SO_2 emission rate-electric energy generated (as calculated according to paragraph (d)(3)(iii) of this section) for the boiler operating days identified in paragraph (d)(3)(iv) of this section.

(vi) Sum, for all affected units, the daily electric energy generated (recorded according to paragraph (d)(3)(i)of this section) for the boiler operating days identified in paragraph (d)(3)(iv) of this section.

(vii) Calculate the weighted plant-wide annual average SO_2 emission rate by dividing the sum of the products determined according to paragraph (d)(3)(v) of this section by the sum of the electric energy generated determined according to paragraph (d)(3)(vi) of this section.

(viii) The weighted plant-wide annual average SO_2 emission rate shall be used to determine compliance with the emission limitation in paragraph (d)(2) of this section.

(4) *Continuous emission monitoring.* The owner or operator shall install, maintain, and operate continuous emission monitoring systems to determine compliance with the emission limitation in paragraph (d)(2) of this section as calculated in paragraph (d)(3) of this section. This equipment shall meet the specifications in appendix B of 40 CFR part 60 in effect on October 3, 1991. The owner or operator shall comply with the quality assurance procedures for continuous emission monitoring systems found in appendix F of 40 CFR part 60 in effect on October 3, 1991.

(5) *Reporting requirements.* For each steam generating unit subject to the emission limitation in paragraph (d)(2) of this section, the owner or operator:

(i) Shall furnish the Administrator written notification of the SO_2, oxygen, and carbon dioxide emissions according to the procedures found in 40 CFR § 60.7 in effect on October 3, 1991.

(ii) Shall furnish the Administrator written notification of the daily electric energy generated in megawatt-hours.

(iii) Shall maintain records according to the procedures in 40 CFR 60.7 in effect on October 3, 1991.

(iv) Shall notify the Administrator by telephone or in writing within one business day of any outage of the control system needed for compliance with the emission limitation in paragraph (d)(2) of this section and shall submit a follow-up written report within 30 days of the repairs stating how the repairs were accomplished and justifying the amount of time taken for the repairs.

(6) *Compliance dates.* The requirements of this paragraph shall be applicable to one unit at the Navajo Generating Station beginning November 19, 1997, to two units beginning November 19, 1998, and to all units beginning on August 19, 1999.

(7) *Schedule of compliance.* The owner or operator shall take the following actions by the dates specified:

(i) By June 1, 1992, award binding contracts to an architectural and engineering firm to design and procure the control system needed for compliance with the emission limitation in paragraph (d)(2) of this section.

(ii) By January 1, 1995, initiate on-site construction or installation of a control system for the first unit.

(iii) By May 1, 1997, initiate start-up testing of the control system for the first unit.

(iv) By May 1, 1998, initiate start-up testing of the control system for the second unit.

(v) By February 1, 1999, initiate start-up testing of the control system for the third unit.

The interim deadlines will be extended if the owner or operators can demonstrate to the Administrator that compliance with the deadlines in paragraph (d)(6) of this section will not be affected.

(8) *Reporting on compliance schedule.* Within 30 days after the specified date for each deadline in the schedule of compliance (paragraph (d)(7) of this section, the owner or operator shall notify the Administrator in writing whether the deadline was met. If it was not met the notice shall include an explanation why it was not met and the steps which shall be taken to ensure future deadlines will be met.

(9) *Exclusion for equipment failure during initial operation.* For each unit, in determining compliance for the first year that such unit is required to meet

the emission limitation in paragraph (d)(2) of this section, periods during which one of the following conditions are met shall be excluded:

(i) Equipment or systems do not meet designer's or manufacturer's performance expectations.

(ii) Field installation including engineering or construction precludes equipment or systems from performing as designed.

The periods to be excluded shall be determined by the Administrator based on the periodic reports of compliance with the emission limitation in paragraph (d)(2) of this section which shall identify the times proposed for exclusion and provide the reasons for the exclusion, including the reasons for the control system outage. The report also shall describe the actions taken to avoid the outage, to minimize its duration, and to reduce SO_2 emissions at the plant to the extent practicable while the control system was not fully operational. Whenever the time to be excluded exceeds a cumulative total of 30 days for any control system for any affected unit, the owner or operators shall submit a report within 15 days addressing the history of and prognosis for the performance of the control system.

(10) *Exclusion for catastrophic failure.* In addition to the exclusion of periods allowed in paragraph (d)(9) of this section, any periods of emissions from an affected unit for which the Administrator finds that the control equipment or system for such unit is out of service because of catastrophic failure of the control system which occurred for reasons beyond the control of the owner or operators and could not have been prevented by good engineering practices will be excluded from the compliance determination. Events which are the consequence of lack of appropriate maintenance or of intentional or negligent conduct or omissions of the owner or operators or the control system design, construction, or operating contractors do not constitute catastrophic failure.

(11) *Equipment operation.* The owner or operator shall optimally operate all equipment or systems needed to comply with the requirements of this paragraph consistent with good engineering practices to keep emissions at or below the emission limitation in paragraph (d)(2) of this section, and following outages of any control equipment or systems the control equipment or system will be returned to full operation as expeditiously as practicable.

(12) *Maintenance scheduling.* On March 16 of each year starting in 1993, the owner or operator shall prepare and submit to the Administrator a long-term maintenance plan for the Navajo Generating Station which accommodates the maintenance requirements for the other generating facilities on the Navajo Generating Station grid covering the period from March 16 to March 15 of the next year and showing at least 6 unit-weeks of maintenance for the Navajo Generating Station during the November 1 to March 15 period, except as provided in paragraph (d)(13) of this section. This plan shall be developed consistent with the criteria established by the Western States Coordinating Council of the North American Electric Reliability Council to ensure an adequate reserve margin of electric generating capacity. At the time that a plan is transmitted to the Administrator, the owner or operator shall notify the Administrator in writing if less than the full scheduled unit-weeks of maintenance were conducted for the period covered by the previous plan and shall furnish a written report stating how that year qualified for one of the exceptions identified in paragraph (d)(13) of this section.

(13) *Exceptions for maintenance scheduling.* The owner or operator shall conduct a full 6 unit-weeks of maintenance in accordance with the plan required in paragraph (d)(12) of this section unless the owner or operator can demonstrate to the satisfaction of the Administrator that a full 6 unit-weeks of maintenance during the November 1 to March 15 period should not be required because of the following:

(i) There is no need for 6 unit-weeks of scheduled periodic maintenance in the year covered by the plan;

(ii) The reserve margin on any electrical system served by the Navajo Generating Station would fall to an inadequate level, as defined by the criteria referred to in paragraph (d)(12) of this section.

(iii) The cost of compliance with this requirement would be excessive. The cost of compliance would be excessive when the economic savings to the owner or operator of moving maintenance out of the November 1 to March 15 period exceeds $50,000 per unit-day of maintenance moved.

(iv) A major forced outage at a unit occurs outside of the November 1 to March 15 period, and necessary periodic maintenance occurs during the period of forced outage.

If the Administrator determines that a full 6 unit-weeks of maintenance during the November 1 to March 15 period should not be required, the owner or operator shall nevertheless conduct that amount of scheduled maintenance that is not precluded by the Administrator. Generally, the owner or operator shall make best efforts to conduct as much scheduled maintenance as practicable during the November 1 to March 15 period.

[50 FR 28553, July 12, 1985, as amended at 52 FR 45137, Nov. 24, 1987; 56 FR 50186, Oct. 3, 1991; 61 FR 14975, Apr. 4, 1996]

§52.146 Particulate matter (PM–10) Group II SIP commitments.

(a) On December 28, 1988, the Governor's designee for Arizona submitted a revision to the State Implementation Plan (SIP) for Casa Grande, Show Low, Safford, Flagstaff and Joseph City, that contains commitments, from the Director of the Arizona Department of Environmental Quality, for implementing all of the required activities including monitoring, reporting, emission inventory, and other tasks that may be necessary to satisfy the requirements of the PM–10 Group II SIPs.

(b) The Arizona Department of Environmental Quality has committed to comply with the PM–10 Group II State Implementation Plan (SIP) requirements for Casa Grande, Show Low, Safford, Flagstaff and Joseph City as provided in the PM–10 Group II SIPs for these areas.

(c) On December 28, 1988, the Governor's designee for Arizona submitted a revision to the State Implementation Plan (SIP) for Ajo, that contains commitments from the Director of the Arizona Department of Environmental Quality, for implementing all of the required activities including monitoring, reporting, emission inventory, and other tasks that may be necessary to satisfy the requirements of the PM–10 Group II SIPs.

(d) The Arizona Department of Environmental Quality has committed to comply with the PM–10 Group II State Implementation Plan (SIP) requirements.

[55 FR 17437, Apr. 25, 1990 and 55 FR 18108, May 1, 1990]

Subpart E—Arkansas

§52.170 Identification of plan.

(a) Title of plan: ''Arkansas Plan of Implementation for Air Pollution Control.''

(b) The plan was officially submitted on January 28, 1972.

(c) The plan revisions listed below were submitted on the dates specified.

(1) A certification that the public hearings on the plan were held was submitted by the State Department of Pollution Control and Ecology on January 25, 1972. (Non-regulatory)

(2) State Department of Pollution Control and Ecology letter outlining projected emission reductions, ASA forecasts, source surveillance, legal authority and interstate cooperation was submitted on February 24, 1972. (Non-regulatory)

(3) Revision of section 16 of the State air code was submitted by the Department of Pollution Control and Ecology on July 7, 1972.

(4) June 27, 1975, letter from the Governor submitting sections 1 through 10 of the Regulations and Strategy of the Arkansas Plan of Implementation for Air Pollution Control except those portions relating to delegation of authority to enforce Federal requirements.

(5) August 16, 1976, statement issued by Director of the Arkansas Department of Pollution Control and Ecology specifying the test and reference methods for determining compliance with emission limitations.

(6) Administrative changes to the Arkansas Air Quality Surveillance Network were submitted by the Arkansas Department of Pollution Control and Ecology on February 15, 1977, January 10, 1978, and March 27, 1978. (Non-regulatory.)

(7) On April 4, 1979, the Governor submitted the nonattainment area plan for the area designated nonattainment as of March 3, 1978.

(8) On August 14, 1979, the Governor submitted supplemental information clarifying the plan.

(9) Revisions to Arkansas Regulation 4.5(a) for the ''Control of Volatile Organic Compounds'' showing a final compliance date of June 1, 1981, was submitted by the Arkansas Governor on December 10, 1979.

(10) A modification to the definition for lowest achievable emission rate (LAER), consistent with the definition contained in section 171(3) of the Act, was submitted by the Arkansas Governor on December 10, 1979.

(11) On July 11, 1979, the Governor submitted revisions to section 6(a) malfunction or upset and section 7(e) continuous emission monitoring of the Arkansas Regulations.

(12) Revisions to section 3 (i.e., 3.(a), (b), (k), (l), (n), (o), (z), (bb), (dd), (ee), (ff), and (gg)), section 4 (i.e., 4.1(b), 4.2(a), 4.5(a)(1), 4.5(a)(2), 4.6(c), and 4.6(d)), and section 5 (i.e., 5.4 and 5.5) were adopted by the Arkansas Commission on Pollution Control and Ecology on September 26, 1980 and submitted by the Governor on October 10, 1980.

(13) Revisions to section 3 (i.e., 3.(ii) through 3.(nn)), section 4 (i.e., 4.1, 4.5(a)(1), 4.5(a)(2), and 4.6(e)), and section 5 (i.e., 5.6) of the Arkansas Regulations for the Control of Volatile Organic Compounds were adopted by the Arkansas Commission on Pollution Control and Ecology on April 10, 1981 and submitted by the Governor on April 23, 1981.

(14) A variance to Regulation 8 for Weyerhaeuser Gypsum Plant in Nashville, Arkansas was submitted by the Governor on June 29, 1981.

(15) On April 23, 1981, the Governor submitted revisions to the plan to incorporate Federal Prevention of Significant Deterioration (PSD) Regulations 40 CFR 52.21 by reference.

(16) On September 11, 1981, the Governor submitted a revision to section 8 of the Regulations of the Arkansas Plan of Implementation for Air Pollution Control which implements an emission limit for Energy Systems Company of El Dorado, Arkansas.

(17) The Arkansas State Implementation Plan for lead was submitted to EPA on December 10, 1979, by the Governor of Arkansas as adopted by the Arkansas Department of Pollution Control and Ecology on November 16, 1979. A letter of clarification dated January 5, 1982, also was submitted.

(18) Revisions to the plan for intergovernmental consultation, interstate pollution abatement, and composition of the Arkansas Commission on Pollution Control and Ecology were submitted to EPA by the Arkansas Department of Pollution Control and Ecology on January 9, 1980.

(19) Revision to the plan for maintenance of employee pay was submitted to EPA by the Arkansas Department of Pollution Control and Ecology on January 9, 1980.

(20) On April 24, 1980, the Governor submitted final revisions to the ambient monitoring portion of the plan.

(21) On December 10, 1979, the Governor submitted a revision to Section 5.1(a) of the Regulation of the Arkansas Plan of Implementation for Air Pollution Control, which controls VOC emissions. This revision was adopted by the Arkansas Commission on Pollution Control and Ecology on November 16, 1979.

(22) On July 12, 1985, the Governor submitted a revision entitled, ''Protection of Visibility in Mandatory Class I Federal Areas, May 6, 1985.'' This submittal included new source review regulations and visibility monitoring strategy as adopted by the Arkansas Commission on Pollution Control and Ecology on May 24, 1985.

(i) Incorporation by reference.

(A) New source review regulations include amendments to rules and regulations of the Arkansas Department of Pollution Control and Ecology entitled, ''Prevention of Significant Deterioration Supplement to the Arkansas Plan of Implementation for Air Pollution Control,'' Sections 1 through 6, adopted on May 24, 1985.

(B) Arkansas Department of Pollution Control and Ecology Minute Order No. 85–12, adopted May 24, 1985.

(ii) Additional Material.

(A) Narrative submittal, including introduction, and visibility monitoring strategy.

(23) A revision to the Arkansas Plan of Implementation of Air Pollution Control was submitted by the Governor on November 25, 1985.

(i) Incorporation by reference. (A) Act 763 of 1985 (public availability of emission data) approved April 3, 1985. Act 763 of 1985 amends section 82–1937 (Industrial secrets confidential—Revealing a misdemeanor) of the Arkansas Water and Air Pollution Control Act.

(24) A revision to the Arkansas Plan of Implementation for Air Pollution Control was submitted by the Governor on December 16, 1985.

(i) Incorporation by reference. (A) Act 817 of 1983 (permit fees) adopted March 25, 1983. Act 817 of 1983 added sections 82–1916 thru 82–1921 to the Arkansas Statutes. (B) Arkansas Department of Pollution Control and Ecology Regulation No. 9 (Regulations for Development and Implementation of a Permit Fee System for Environmental Permits) adopted by the Arkansas Commission on Pollution Control and Ecology on November 16, 1984. Only those portions of Regulation No. 9 related to air permits are incorporated.

(25) Part II of the Visibility Protection Plan was submitted by the Governor on October 9, 1987.

(i) Incorporation by reference.

(A) Revision entitled ''Arkansas Plan of Implementation for Air Pollution Control—Revision: Protection of Visibility in Mandatory Class I Federal Areas: Part II—Long-Term Strategy, September 29, 1987''. This submittal includes a visibility long-term strategy and general plan provisions as adopted by the Arkansas Commission on Pollution Control and Ecology on September 25, 1987.

(B) Arkansas Department of Pollution Control and Ecology, Minute Order No. 87–24, adopted September 25, 1987.

(ii) Additional material.

(A) None.

(26) A revision to the Arkansas Plan of Implementation for Air Pollution Control, as adopted by the Arkansas Commission on Pollution Control and Ecology on May 22, 1987, was submitted by the Governor of Arkansas on July 1, 1987. This revision adds the definitions and dispersion technique regulations required to implement the Federal stack height regulations.

(i) Incorporation by reference. (A) Sections 3(r), 3(s), 3(t), 3(u), 3(v), 3(w), 3(x), 3(y), 5(f), and 5(g) of the Arkansas Plan of Implementation for Air Pollution Control as adopted by the Arkansas Commission on Pollution Control and Ecology on May 22, 1987.

(ii) Additional material—None.

(27) Revisions to the Arkansas State Implementation Plan for (1) the National Ambient Air Quality Standards and particulate matter definitions (subsections (z) through (ff) of ''Section 3. Definitions''). (2) Prevention of Significant Deterioration of Air Quality and its Supplement, and (3) subsection f(ix) of ''Section 4. Permits'', as adopted on March 25, 1988, by the Arkansas Commission on Pollution Control and Ecology, were submitted by the Governor on June 3, 1988.

(i) Incorporation by reference. (A) Regulations of the Arkansas Plan of Implementation for Air Pollution Control ''Section 3. Definitions'', subsections (z) through (ff), as promulgated on March 25, 1988.

(B) Prevention of Significant Deterioration Supplement Arkansas Plan of Implementation For Air Pollution Control, as amended on March 25, 1988.

(C) Regulations of the Arkansas Plan for Implementation for Air Pollution Control ''Section 4. Permits'', subsection f(ix), as promulgated on March 25, 1988.

(ii) Other material—None.

(28) Revisions to the Arkansas State Implementation Plan for Prevention of Significant Deterioration (PSD) of Air Quality Supplement Arkansas Plan of Implementation for Air Pollution Control (PSD nitrogen dioxide increments), as adopted on May 25, 1990, by the Arkansas Commission on Pollution Control and Ecology, were submitted by the Governor on June 19, 1990.

(i) Incorporation by reference.

(A) Prevention of Significant Deterioration Supplement Arkansas Plan of Implementation For Air Pollution Control as amended on May 25, 1990.

(ii) Additional Material—None.

(29)-(30) [Reserved]

(31) The State is required to implement a Small Business Stationary Source Technical and Environmental

Compliance Assistance Program (PROGRAM) as specified in the plan revision submitted by the Governor on November 6, 1992. This plan submittal, as adopted by the Arkansas Commission on Pollution Control and Ecology on November 5, 1992, was developed in accordance with section 507 of the Clean Air Act. On April 23, 1993, the Governor submitted Act 251 of 1993 which establishes the Compliance Advisory Panel (CAP) for the PROGRAM.

(i) Incorporation by reference.

(A) Act 251 of 1993 approved by the Governor on February 26, 1993. Included in this Act are provisions creating a CAP, establishing membership of the CAP, and addressing the responsibilities and duties of the CAP.

(B) Arkansas Department of Pollution Control and Ecology, Minute Order No. 92–81, adopted November 5, 1992.

(ii) Additional material.

(A) Revision entitled, ''Arkansas Small Business Stationary Source Technical and Environmental Compliance Assistance Program SIP Revision'', adopted November 5, 1992.

(B) Legal opinion letter dated November 5, 1992, from Steve Weaver, Chief Counsel, Arkansas Department of Pollution Control and Ecology, regarding legality of Commission teleconference meeting.

[37 FR 10850, May 31, 1972]

EDITORIAL NOTE: For FEDERAL REGISTER citations affecting § 52.170, see the List of CFR Sections Affected in the Finding Aids section of this volume.

§ 52.171 Classification of regions.

The Arkansas plan was evaluated on the basis of the following classifications:

Air quality control region	Pollutant				
	Particulate matter	Sulfur oxides	Nitrogen dioxide	Carbon monoxide	Ozone
Central Arkansas Intrastate	II	III	III	III	III
Metropolitan Fort Smith Interstate	II	III	III	III	III
Metropolitan Memphis Interstate	I	III	III	III	I
Monroe (Louisiana)-El Dorado (Arkansas) Interstate	II	III	III	III	III
Northeast Arkansas Intrastate	III	III	III	III	III
Northwest Arkansas Intrastate	III	III	III	III	III
Shreveport-Texarkana-Tyler Interstate	II	III	III	III	III

[37 FR 10850, May 31, 1972, as amended at 39 FR 16346, May 8, 1974; 45 FR 6571, Jan. 29, 1980]

§ 52.172 Approval status.

With the exceptions set forth in this subpart, the Administrator approves Arkansas' plan for the attainment and maintenance of the national standards under section 110 of the Clean Air Act. Further, the Administrator finds that the plan satisfies all requirements of Part D of the Clean Air Act, as amended in 1977, except as noted below.

[45 FR 6571, Jan. 29, 1980]

§§ 52.173—52.180 [Reserved]

§ 52.181 Significant deterioration of air quality.

(a) The plan submitted by the Governor of Arkansas on April 23, 1981 [as adopted by the Arkansas Commission on Pollution Control and Ecology (ACPCE) on April 10, 1981], June 3, 1988 (as revised and adopted by the ACPCE on March 25, 1988), and June 19, 1990 (as revised and adopted by the ACPCE on May 25, 1990), Prevention of Significant Deterioration (PSD) Supplement Arkansas Plan of Implementation For Air Pollution Control, is approved as meeting the requirements of Part C, Clean Air Act for preventing significant deterioration of air quality.

(b) The requirements of sections 160 through 165 of the Clean Air Act are not met for Federally designed Indian lands. Therefore, the provisions of § 52.21 (b) through (w) are hereby incorporated by reference and made a part of the applicable implementation plan and are applicable to sources located on land under the control of Indian governing bodies.

[56 FR 20139, May 2, 1991]

§52.183 Small business assistance program.

The Governor of Arkansas submitted on November 6, 1992, a plan revision to develop and implement a Small Business Stationary Source Technical and Environmental Compliance Assistance Program (PROGRAM) to meet the requirements of section 507 of the Clean Air Act by November 15, 1994. The plan commits to provide technical and compliance assistance to small businesses, hire an Ombudsman to serve as an independent advocate for small businesses, and establish a Compliance Advisory Panel to advise the program and report to the EPA on the program's effectiveness. On April 23, 1993, the Governor submitted Act 251 of 1993 which establishes the Compliance Advisory Panel for the PROGRAM.

[60 FR 12695, Mar. 8, 1995]

Subpart F—California

§52.219 Identification of plan—conditional approval.

The plan revision commitments listed in paragraph (a) of this section were submitted on the date specified.

(a) On November 13, 1992, California submitted a commitment to prepare a revision to the California State Implementation Plan (SIP) for the California ozone nonattainment areas to address the requirement in section 182(c)(4)(B) of the 1990 Clean Air Act Amendments that requires the States to develop a SIP revision for all ozone nonattainment areas classified as serious and above to opt-out of the Clean-Fuel Fleet Program by submitting for EPA approval a substitute program(s) resulting in as much or greater long-term reductions in ozone-producing and toxic air emissions. The State submittal contained an interim milestone to supply more accurate emission reduction data demonstrating equivalence no later than one year after the publication date of the FEDERAL REGISTER notice approving the State's committal SIP revision. California is required to submit the final SIP revision by May 15, 1994. The State held a public meeting on this committal SIP on March 17, 1992. The California SIP revisions are met automatically when the SIP revision concerns a regulation previously adopted by the Board.

(b) [Reserved]

[58 FR 62533, Nov. 29, 1993]

§52.220 Identification of plan.

(a) Title of plan: ''The State of California Implementation Plan for Achieving and Maintaining the National Ambient Air Quality Standards''.

(b) The plan was officially submitted on February 21, 1972.

(c) The plan revisions listed below were submitted on the dates specified.

(1) Air quality data submitted on April 10, 1972, by the Air Resources Board.

(2) Report on status of regulations submitted on April 19, 1972, by the Air Resources Board.

(3) Emission inventory submitted on April 21, 1972, by the Air Resources Board.

(4) Air quality data submitted on April 26, 1972, by the Air Resources Board.

(5) Air quality data submitted on May 5, 1972, by the Air Resources Board.

(6) Revised regulations for all APCD's submitted on June 30, 1972, by the Governor, except for:

(i) San Diego County Air Pollution Control District.

(A) Rule 65 is now removed without replacement as of March 14, 1989.

(7) Information (Non-regulatory) regarding air quality surveillance submitted on July 19, 1972, by the Air Resources Board.

(8) Compliance schedules submitted on December 27, 1973, by the Air Resources Board.

(9) Compliance schedules submitted on February 19, 1974, by the Air Resources Board.

(10) Compliance schedules submitted on April 22, 1974, by the Air Resources Board.

(11) Compliance schedules submitted on June 7, 1974, by the Air Resources Board.

(12) Compliance schedules submitted on June 19, 1974, by the Air Resources Board.

(13) Compliance schedules submitted on September 4, 1974, by the Air Resources Board.

(14) Compliance schedules submitted on September 19, 1974, by the Air Resources Board.

(15) Compliance schedules submitted on October 18, 1974, by the Air Resources Board.

(16) Compliance schedules submitted on December 4, 1974, by the Air Resources Board.

(17) Compliance schedules submitted on January 13, 1975, by the Air Resources Board.

(18) Air quality maintenance area designations submitted on July 12, 1974, by the Governor.

(19)–(20) [Reserved]

(21) Revised regulations for the following APCD's submitted on July 25, 1973, by the Governor.

(i) Lassen County APCD.

(A) Appendix A (Implementation Plan for Agricultural Burning) and Appendix B (Enforcement).

(ii) Modoc County APCD.

(A) Rule 3:10A and Regulation V (Rules 5:1 to 5:7).

(iii) Siskiyou County APCD.

(A) Rules 2.13, 4.5, 4.12, 4.13, 4.14, and Implementation Plan for Agricultural Burning.

(iv) Bay Area APCD.

(A) Regulation 1.

(*1*) Division 1, Sections 1000–1010.

(*2*) Division 2, Section 2000.

(*3*) Division 3, Sections 3000–3004, 3100–3111, 3115–3118, 3120, and 3200–3500.

(*4*) Division 4.

(B) Regulation 4.

(*1*) Sections 1–2.

(C) Regulation 2.

(*1*) Division 1, Sections 1214 to 1214.3.

(D) Regulation 3.

(*1*) Division 1, Sections 1205 to 1205.3.

(v) Butte County APCD.

(A) Sections 1–1 to 1–35, 2–8, 2–10 to 2–11, 2A–1 to 2A–18, 3–2 to 3–2.1, 3–6, 3–9, 3–10.1, 3–11.1, 3.14, and 3.16.

(vi) San Diego County APCD.

(A) Rules 41, 55, 58, and 101–113.

(vii) Tehama County APCD.

(A) Rules 1:2, 3:1–3, 3:3a, 3:3b, 3:4–3:5, 3:5a, 3:6–3:14, 4:6, and Implementation Plan for Agricultural Burning.

(viii) Yuba County APCD.

(A) Rules 1.1, 2.1–2.2, 2.10, 4.11, and Agricultural Burning Regulations, Sections 1 to 6.

(B) Rule 4.5.

(ix) Kings County APCD.

(A) Rules 102, 105–108, 110, 404–406, 409, 417–I, II, IV, and 510.

(B) Rule 111.

(x) Colusa County APCD.

(A) Rule 6.5 and Amendment Number 3.

(B) Rule 4.4g.

(xi) Imperial County APCD.

(A) Agricultural Burning Implementation Plan (Rules 200–206).

(xii) Sacramento County APCD

(A) Rules 72, 90, 91, and 92.

(xiii) Ventura County APCD.

(A) Rules 2, 37, 56, 59, 60, and 101.

(xiv) Yolo-Solano APCD.

(A) New or amended Rules 1.2 (a, b, d to g, i to x, and z to ae), 1.4, 2.4(e), 2.8, 2.9, 4.1 to 4.5, 5.1 to 5.18, 6.1 (i) and (j), 6.2 to 6.5, and 6.7 to 6.8.

(xv) San Bernardino County APCD.

(A) New or amended Rules 5(a), 53A, 57, 57.1, 57.2.

(xvi) Santa Barbara County APCD.

(A) Rules 2(a, b, k, l, m, n, o, p, q, r, s, t, u, v, w), 40 [with the exception of 40(4)(m)].

(xvii) Calaveras County APCD.

(A) Rules 110 and 402(f).

(xviii) Los Angeles County APCD (Metropolitan Los Angeles portion).

(A) Amended Rule 45.

(22) Revised regulations for the following APCD's submitted on November 2, 1973 by the Governor's designee.

(i) Bay Area APCD.

(A) Regulation 2.

(*1*) Division 1, Section 1222.

(*2*) Division 3, Section 3211.

(*3*) Division 4, Section 4113.

(*4*) Division 8, Sections 8414–8416.

(*5*) Division 9, Sections 9613, 9615, 9711.3, and 9711.5.

(*6*) Division 11, Section 11101.

(23) Revised regulations for the following APCD's submitted on January 22, 1974 by the Governor's designee.

(i) Sacramento County APCD.

(A) Rule 30.

(ii) Santa Barbara County APCD.

(A) Rules 22, 24.1, 24.2.

(24) Revised regulations for the following APVD's submitted on July 19, 1974, by the Governor's designee.

(i) Sutter County APCD.

(A) Rule 1.3

(ii) Bay Area APCD.

(A) Regulation 1: (*1*) Sections 3112–3114, 3119 and 3122.

(iii) San Diego County APCD.

(A) Regulation IX.
(B) Rule 61.
(iv) Stanislaus County APCD.
(A) Rules 103, 108, 108.1, 113, 401, 402, 403, 404, 405, 409.1, 409.2, 418, 421, 505, 518, and 401.1.
(B) Rule 110.
(v) Tehama County APCD.
(A) Rules 3:14 and 4:18.
(B) Rule 4:17.
(vi) Shasta County APCD.
(A) Rules 1:1 to 1:2, 2:6(1.)(a), 2:6(1.)(b)(i–ii and iv–vii) 2:6(1.)(c)(i–vi), 2:6(1.)(d–e), 2:6(2–4), 2:7, 2:8(a–c), 2:9, 2:11, 2:14, 2:25, 3:1 to 3:9, 3:11 to 3:12, and 4:1 to 4:23.
(B) Rule 3:10.
(vii) Kern County APCD.
(A) Rules 102, 103, 108, 108.1, 110, 113, 114, 301, 305, 401, 404, 405, 407.3, 409, 411, 413, 414, 417–I and II, 504, 516, and 518
(B) Rule 111.
(C) Rules 601–615, except those portions pertaining to sulfur dioxide and the 12-hour carbon monoxide criteria levels.
(viii) Sacramento County APCD.
(A) Rules 11, 39, 44, 70, 73, and 111.
(B) Rules 123 and 124, except those portions that pertain to the 12-hour CO criteria level.
(ix) Yolo-Solano APCD.
(A) Rule 2.22.
(B) New or amended Rules 1.2(c, h, and y), 1.3, 2.11 to 2.16, 2.19, 4.3, 5.4, 5.6, and 5.12.
(x) Ventura County APCD.
(A) Rules 2, 3, 31, 32, 200, 203, and 204.
(B) Rule 32.
(C) Rules 70, 73.
(D) Rule 96.
(E) Rule 111.
(xi) Santa Barbara County Air Pollution Control District.
(A) Rules 150 to 152, 154 to 159, 160A, and 161 to 164, except those portions pertaining to nitrogen oxides, sulfur dioxide and the 12-hour carbon monoxide criteria levels.
(25) Revised regulations for the following APCD's submitted on October 23, 1974 by the Governor's designee.
(i) Fresno County APCD.
(A) Rules 102, 103, 108, 108.1, 111–114, 401, 404–406, 408, 409.1, 409.2, 416, 416.1a, b, c(2), c(3), d, e(2), and f, 505 and 518.
(B) Rule 110.
(C) New or amended Rules 402 (a to g), 416.1(c)(1), 416.1(e)(1), 416.1(e)(3), and 416.1(e)(4).
(D) Rules 601–615, except those portions pertaining to sulfur dioxide and the 12-hour carbon monoxide criteria levels.
(ii) San Joaquin County APCD.
(A) Rules 102, 103, 108, 108.1, 108.2, 113, 305, 404–406, 407.2, 407.3, 408, 408.1, 409.1, 409.2, 410, 413, 414, 416, 416.1A to C, and D.3 to E., 417, 420, 420.1, 421, 504, 505, and 510–520.
(B) Rule 110.
(C) New or amended Rules 416.1 (D)(1) and (D)(2).
(iii) Lake County APCD.
(A) Parts II—V, Sections 3–7 of Part VI, Parts XI–XIII, Appendix A (Agricultural Burning Definitions A–M, Burning Regulations/Agricultural Burning (Farm) 1–9, /Farm 1–3, /Range 1–2), Appendix B (Parts I–II, Part IV–1, 2, 5, and 6, Part V–1, 4, 5 and 6, Parts VI–VII, Part VIII–1–7 and 9, Parts IX–X), Tables I–IV.
(iv) Tulare County APCD.
(A) Rules 102, 103, 108.1, 110, 112–114, 302, 401, 404–406, 407.3, 408, 410, 410.1, 410.2, 411, 420, 503–505, and 515.
(v) Ventura County APCD.
(A) Rules 2 and 125.
(vi) Santa Barbara County Air Pollution Control District.
(A) Rule 160B, except those portions pertaining to nitrogen oxides, sulfur dioxide and the 12-hour carbon monoxide criteria levels.
(vii) Monterey Bay Unified APCD.
(A) Rules 100 to 106, 300 to 303, 400 to 401, 403, 404(a)(b)(d), 405 to 408, 412 to 417, 419 to 420, 500 to 508, 600 to 616, and 800 to 816.
(26) Revised regulations for the following APCD's submitted on January 10, 1975, by the Governor's designee.
(i) Sutter County APCD
(A) Rule 4.1
(ii) Bay Area APCD
(A) Regulation 2: (*1*) Sections 2018.1–2.
(B) Regulation 7.
(C) Regulation 8.
(iii) Butte County APCD.
(A) Sections 3–11, 3–12, and 3–12.1.
(iv) Glenn County APCD.
(A) Sections 2, 3.1, 10–14.3, 16, 17, 21, 21.1, 24, 57, 58, 81, 85, 86, 95.1, 118, 122.1–122.3, 154 and 155.
(B) Rules 95.2 and 95.3.
(v) Yuba County APCD.
(A) Agricultural Burning Regulations, sections 1 and 3.

(vi) Colusa County APCD.
(A) Rules 6.2 and 6.4.d. (1–2).
(vii) Fresno County APCD.
(A) Rules 409, 417, 503, 507, 513, and 515.
(viii) Mariposa County APCD.
(A) Rules 101, 102, 201, 202, 203 (a–f, h, i, and k), 204–216, 301–303, 305–306, 308–313, 315–323, 401–403, 405–409, and 600–618.
(B) Rule 203(j).
(ix) Sierra County APCD.
(A) Rules 101, 102, 201–216, 301–323, 405–409, 601–620, 6, 27, 29, and 51–56.
(x) Shasta County APCD.
(A) Rules 2:6(5)(b), 3:1, 3:2, 4:6, and 4:14.
(xi) Tulare County APCD.
(A) Rules 417 and 417.1a. thru d., e.2., and f.
(B) New or amended Rules 417.1 (e)(1), (e)(3) and (e)(4).
(xii) Kern County APCD.
(A) Rules 410 and 503.
(xiii) Madera County APCD.
(A) Rules 102, 103, 105, 108, 112–114, 301, 305, 401, 402, (a–e, and g), 404–406, 407.2, 407.3, 408, 409, 409.1 409.2, 412, 416, 416.1a, b, c(2), c(3), d, e(2), f, 504, 505, and 518.
(B) Rule 402(f).
(C) Rule 110.
(D) New or amended Rules 416.1 (c)(1), (e)(1), (e)(3), and (e)(4).
(xiv) Yolo-Solano APCD.
(A) New or amended Rule 6.1 (a), (b), (c), (d), (e), and (g) (1, 2, and 3).
(xv) Monterey Bay Unified APCD.
(A) Rules 49 to 411 and 421.
(xvi) Plumas County APCD.
(A) Rule 203(j).
(B) New or amended Rules 101, 102, 201, 202, 204, 206, 209, 210(a), 214, 216, 216–49, 216–50, 216–51, 216–54, 216–55, 216–56, 216–1, 216–2, 216–3, 305, 306, 309, 310, 311, 312, 313, 314, 315, 316, 317, 318, 401, 403, 405, 406, 408, 701, 702, 704, 705, 706, 707, 708, 709, 711, 712, 713, 714, 715, 716, 717.
(C) Previously approved and now deleted (without replacement) Rules 51.7, 57.5, 62, 70.
(xvii) Placer County APCD.
(A) New or amended Rules 102, 105, 201, 202, 204, 209, 312, 403, 405, 406, 701, 705, 707, 711, 712, 713, 714, 716, 717.
(27) Revised regulations for the following APCD's submitted on April 10, 1975, by the Governor's designee.
(i) Stanislaus County APCD.
(A) Rule 409.
(ii) Tehama County APCD.
(A) Rule 4:6.
(iii) Sacramento County APCD.
(A) Rules 12, 22a, 22b, 25, 32–34, and 40.
(iv) Bay Area APCD.
(A) Regulation 2, section 1302.2 and section 1302.22.
(B) Rules 32, 33, 34, 38, 40.
(v) San Bernardino County APCD.
(A) New or amended Rule 73.
(vi) Riverside County APCD.
(A) New or amended Rule 57.
(vii) Nevada County APCD.
(A) New or amended Rules 101, 102, 105, 106, 107, 201, 202, 203 [with exception of (g)], 204, 206, 208, 209, 210(a), 212, 214, 215, 301, 302, 303, 305, 306, 307, 308, 309, 310, 311, 312, 313, 314, 315, 316, 317, 318, 322, 401, 403, 405, 406, 408, 601, 602, 701, 702, 703, 705, 706, 707, 708, 709, 711, 712, 713, 714, 715, 716, 717.
(viii) El Dorado County APCD.
(A) New or amended Rules 101, 102, 202, 204, 206, 209, 210(a), 212, 214, 301, 305, 306, 309, 310, 311, 312, 313, 315, 316, 317, 318, 323, 401, 403, 405, 406, 408, 601, 602, 701, 702, 704, 705, 706, 707, 708, 709, 711, 712, 713, 714, 715, 716, 717.
(B) Previously approved and now deleted (without replacement) Rules 5, 6, 7.
(ix) [Reserved]
(x) Santa Barbara County APCD.
(A) Rules 32, 36, 36.3, 36.4, 36.5, 37, 38.
(28) Revised regulations for the following APCD's submitted on July 22, 1975, by the Governor's designee.
(i) Sutter County APCD
(A) Rules 1.2, 2.82, and 4.11.
(ii) San Diego County APCD.
(A) Rule 66.
(iii) Yuba County APCD
(A) Rule 1.1.
(iv) Calaveras County APCD.
(A) Rules 102, 201–215, 301–323, 401–403, 405–408, 409 (Public Records), 601–604, 700–717, 105, 106, 110, 407(b), 409 (Organic Solvents), 409.1 (Architectural Coatings), 409.2 (Disposal and Evaporation of Solvents), 412, and 413.
(v) Tuolumne County APCD.
(A) Rules 102, 201, 202, 203, (a–f, h, i, and k), 204–216, 301–303, 305–306, 308–313, 315–323, 400–403, 405–408, 409 (Public Records), 600–618, 105–110, 301–304, 409 (Fuel Burning Equipment, Oxides of Nitrogen), 410, and 412–414.
(vi) Kings County APCD.
(A) Rule 410.
(vii) Shasta County APCD.

(A) Rule 2.8(e).
(viii) Kern County APCD.
(A) Rules 115, 407.1, 422, and 423.
(ix) Sacramento County APCD.
(A) Rule 93.
(x) Riverside County APCD.
(A) New or amended Rule 53.
(xi) Orange County APCD (Metropolitan Los Angeles portion).
(A) Amended Rule 53.
(29) Revised regulations for the following APCD's submitted on November 3, 1975 by the Governor's designee.
(i) Lake County APCD.
(A) Part III, Number 59a.
(ii) Sacramento County APCD.
(A) Rules 13 and 14.
(B) Rules 71, 112, and 113.
(iii) Monterey Bay Unified APCD.
(A) Rule 418.
(iv) Bay Area APCD.
(A) Regulation 2, section 1302.21 and section 1302.23.
(v) San Diego County.
(A) Rule 63.
(B) Rules 112, 113.
(vi) Ventura County APCD.
(A) Rules 65, 66, 72, and 73.
(30) Revised regulations for the following APCD's submitted on February 10, 1976 by the Governor's designee.
(i) Bay Area APCD
(A) Regulation 1: (*1*) Section 3121.
(B) Regulation 6.
(ii) Butte County APCD
(A) Section 3–11.2
(iii) Yuba County APCD.
(A) Agricultural Burning Regulations, sections 1 and 3.
(iv) Colusa County APCD.
(A) Rule 6.6A.I and 6.6A.II–1. (a–f).
(v) Fresno County APCD.
(A) Rules 115, 422, 423, and 407.
(vi) San Joaquin County APCD.
(A) Rules 114, 401, 402, 407.1, 409, 411, 422 and 423.
(B) [Reserved]
(C) Rule 411.1 and 411.2.
(vii) Lake County APCD.
(A) Table V.
(viii) Sacramento County APCD.
(A) Rules 94–97.
(ix) Ventura County APCD.
(A) Rules 70 and 71.
(x) Southern California APCD.
(A) New or amended Rules 501, 502, 506, 507, 508, 509, 511, 512, 513, 514, 515, 516, 517, 518, 801, 803, 804, 807, 808, 809, 810, 811, 813, 814, 815, 817.
(xi) Santa Barbara County APCD.
(A) Rule 32.1.
(31) Revised regulations for the following APCD's submitted on April 21, 1976, by the Governor's designee.
(i) Great Basin Unified APCD.
(A) [Reserved]
(B) Rules 100 to 107, 215, 300 to 303, 400 to 402, 404 to 413, 416 to 421, 500 to 501, 600 to 616, and 800 to 817.
(C) Alpine County APCD: Rules 1.4, 3.1, 4.2–1, 4.7, 4.7–1, 4.8, 4.10, 4.11, and 5.18.
(D) Inyo County APCD: Rules 1.3, 3.1, 4.1, 4.10, 4.11, 4.12, and 5.1.
(E) Mono County APCD: Rules 1.4, 3.1, 4.2–1, 4.7, 4.7–1, 4.8, 4.10, 4.11, 5.1, and 5.18.
(ii) Sutter County APCD
(A) Rule 4.1
(iii) San Diego County APCD.
(A) Rule 5.
(iv) Glenn County APCD
(A) Sections 14.3 and 15.
(v) Kings County APCD.
(A) Rule 411.
(B) Rules 412 and 412.1.
(vi) Southern California APCD.
(A) Rules 461 and 462.
(B) New or amended Rules 103, 104, 105, 106.
(C) Rules 201–207, 209–212, 214–217, and 219.
(vii) Santa Barbara County APCD.
(A) Rule 35.1 and 35.2.
(B) Rule 2(x).
(C) Rule 63, except those portions pertaining to sulfur dioxide and the 12-hour carbon monoxide criteria levels.
(viii) Fresno County APCD.
(A) Rule 411 and 411.1.
(ix) Kern County APCD.
(A) Rule 412 and 412.1.
(x) Stanislaus County APCD.
(A) Rule 411 and 411.1.
(xi) Tulare County APCD.
(A) Rule 412 and 412.1.
(xii) Madera County APCD.
(A) Rule 411.1 and 411.2.
(xiii) Ventura County APCD.
(A) Rules 2, 4, 36, 40, 41, 42, 43, 104, 201, and 202.
(xiv) Yolo-Solano APCD.
(A) New or amended Rules 6.1(f) (1 and 2), (g)(4), (h) (1 and 2) and 6.6.
(xv) Nevada County APCD.
(A) Amended Rule 211.
(xvi) Bay Area APCD.
(A) Regulation 2, section 3212.

(B) Regulation 3, section 3203.

(xvii) [Reserved]

(xviii) Amador County APCD.

(A) Rule 404.

(B) New or amended Rules 101, 102, 104, 105, 106, 107, 201, 202, 204, 206, 207.1, 209, 210(A), 211, 212, 213.2, 213.3, 214, 305, 307, 308, 312, 401, 402, 403, 405, 406, 408, 409, 601, 602, 603, 702, 704, 705, 706, 707, 708, 709, 711, 712, 713, 714, 715, 716, 717.

(C) Previously approved and now deleted (without replacement) Rules 18.1 (Regulation V), 22 (Regulation V).

(32) Revised regulations for the following APCD's submitted on August 2, 1976 by the Governor's designee.

(i) Bay Area APCD.

(A) Regulation 2: (*1*) Sections 2022.1–2, 2035.1, 3211.1, and Divisions 16–18.

(ii) Stanislaus County APCD.

(A) Rules 102, 104, 105, 111, 112, 114, 301, 305, 407.1, 416, 416.1, 422, 423, 501, 504, and 511.

(iii) Merced County APCD.

(A) Rules 411 and 411.1.

(B) Rule 109.

(C) New or amended Rules 102, 103, 103.1, 104, 105, 108.1, 110 to 115, 302, 401, 404, 405, 407.1, 408.1, 408.2, 409, 409.1, 409.2, 410, 412, 416, 416.1[(I), (II) (A–L), (II) (N–O), (III), (IV), (V), and (VI)], 421(a), 501, 504, 505, 511, and 518.

(D) Previously approved and now deleted (without replacement) Rules 102(hh) and 102(ii).

(iv) Southern California APCD.

(A) New or amended Rules 403, 404, 405, 407, 408, 409, 432, 441, 443, 464, 465, 467, 470, 471, 472, 473, 504, 505, 510, 802, 805, 806, 812, 816.

(B) Previously approved and deleted (without replacement).

(*1*) Los Angeles County APCD Rules 53.1, 55.

(*2*) San Bernardino County APCD Rules 50, 51.

(*3*) Riverside County APCD Rule 55.

(*4*) Orange County APCD Rule 55.

(C) Rules 202 and 219.

(v) Plumas County APCD.

(A) Amended Rule 324.

(vi) El Dorado County APCD.

(A) Amended Rule 211.

(33)–(34) [Reserved]

(35) Revised regulations for the following APCDs submitted on November 10, 1976 by the Governor's designee.

(i) Sacramento County APCD.

(A) Rules 1, 2, 11, 12, 21, 22a, 22b, 24, 25, 27, 28, 29, 33, 39, 44, 70, 71, 90, 92, 93, 94, 95, 96, 97, 98, and definitions list addition to Regulation VII.

(B) Rule 14.

(ii) Southern California APCD.

(A) Rule 461.

(iii) Ventura County APCD.

(A) Rule 70.

(B) Rules 2, 57, 72, and 73 and Regulation VII (Rules 110–129).

(iv) Santa Barbara County APCD.

(A) Rule 35.2.

(v) San Joaquin County APCD.

(A) Rules 102, 103, 103.1, 104, 105, 111, 112, 301, 305, 402, 416.1, 501, 504, 511.

(vi) Tulare County APCD.

(A) Rules 102, 103, 103.1, 104, 105, 110, 112, 115, 305 (402 paragraphs a. through e. and g.), 405, 407.1, 407.3, 409, 417.1, and 421.

(B) Rules 111 and 402(f).

(vii) Fresno County APCD.

(A) Rules 407 and 408.

(viii) Imperial County APCD.

(A) Rules 100, 114.5, 131.5, and 148.D(3).

(ix) Del Norte County APCD.

(A) Rule 540.

(B) [Reserved]

(C) New or amended Rules 100, 110, 120, 130, 150, 160 (except 160(a) and noncriteria pollutants), 190, 240(d) (except paragraph (3)), 300, 310, 320, 340, 400(b), 410(a), 410(c), 420, 430, 440, 470, 480, 482, 500, 510, 520, 600, 610, 620, 630, 640, and 650; and the following portions of Regulation 2: General prohibitions (all of page 1), Articles I and II, paragraphs A1, A2, A3, A4, 5, 7, and 8 of Article III, and Articles IV to VII.

(x) San Diego County APCD.

(A) Rules 2(k), 3, 50, 52, 53, 60, 62.

(xi) Monterey Bay Unified APCD.

(A) Rules 101, 104, 106, 214, 301, 404(c), 406, 407, 415, 601 to 603, 609, 801, 805, and 811.

(xii) San Luis Obispo County APCD.

(A) New or amended Rules 101 *Title*, 102, 103, 105(A)(2) through 105(A)(46), 106, 108, 109, 110 *Enforcement*, 111, 401, 403, 405, 408, 409, 410, 801, 802, 803, 804, 805, 806, 807, 808, 809, 810, 811, 812, 813, 814, 815, 816, 817.

(B) Rule 107.

(C) Rules previously approved and now deleted (without replacement) 101(1)(b), 101(2), 101(3), and 101(4) *Effective Date*, 110 *Prohibitions*, 116(1), 116(3), 119(1) and 119(4).

(D) Amended Rules 501 and 502 (sections A–F, H–I, K–N, O(1), P–Q).

(E) New or amended Rules 202, 205, 206, 207, 208, 209, 210, and 211.

(xiii) Kern County APCD.

(A) New or amended Rules 102, 102(d), 102(oo), 103, 103.1, 104 to 105, 110, 112, 301(f), 305(a), 402 (c) and (e), 417(I)(A), 417(II)(B)(L), 501, and 511.

(B) Rule 504.

(xiv) Humboldt County APCD.

(A) Rule 540.

(B) [Reserved]

(C) New or amended Rules 100, 110, 120, 130, 150, 160 (except 160(a) and noncriteria pollutants), 190, 240(d) (except paragraph (3)), 300, 310, 320, 340, 400(b), 410(a), 410(c), 420, 430, 440, 470, 480, 482, 500, 510, 520, 600, 610, 620, 630, 640, and 650; and the following portions of Regulation 2: General prohibitions (all of page 1), Articles I and II, paragraphs A1, A2, A3, A4, 5, 7, and 8 of Article III, Articles IV to VII, and Appendix A.

(D) Previously approved and now deleted (without replacement) Rules 5, 6, 80, 87, and 95.

(xv) Mendocino County APCD.

(A) Rule 540.

(B) [Reserved]

(C) New or amended Rules 100, 110, 120, 130, 150, 160 (except 160(a) and noncriteria pollutants), 190, 300 (except paragraph (a)), 310, 340, 400(b), 410(b), 410(c), 430, 440, 460, 470, 480, 482, 500, 510, 520, 600, 610, 620, 630, 640, and 650; and the following portions of regulation 2: General prohibitions (all of page 1), Articles I and II, paragraphs A1, A2, A3, A4, 5, 7, and 8 of Article III, Articles IV and V, Article VI(a) to (i), Article VII, and Appendices B and C.

(D) Previously approved and now deleted (without replacement) Parts IV, V–5–B, VI–1, and VI–4.

(xvi) Northern Sonoma County APCD.

(A) Rule 540.

(B) New or amended Rules 100, 110, 120, 130, 150, 160, (except 160(a) and noncriteria pollutants), 190, 300, 310, 320, 340, 400(b), 410(a), 410(c), 420, 430, 440, 470, 480, 482, 500, 510, 520, 600, 610, 620, 630, 640, and 650; and the following portions of Regulation 2: General prohibitions (all of page 1), Articles I and II, paragraphs A1, A2, A3, A4, 5, 7, and 8 of Article III, Articles IV and V, paragraphs (a) to (i) of Article VI, and Article VII.

(xvii) Trinity County APCD.

(A) Rule 540.

(B) [Reserved]

(C) New or amended Rules 100, 110, 120, 130, 150, 160 (except 160(a) and noncriteria pollutants), 190, 240(d) except paragraph (3)), 300, 310, 320, 340, 400(b), 410(a), 410(c), 420, 430, 440, 470, 480, 482, 500, 510, 520, 600, 610, 620, 630, 640, and 650; and the following portions of regulation 2: General prohibitions (all of page 1), articles I and II, paragraphs A1, A2, A3, A4, 5, 7 and 8 of article III, articles IV and V, paragraphs (a) to (i) of article VI, and article VII.

(36) Revised regulations for the following APCD were submitted on November 19, 1976, by the Governor's designee.

(i) Southern California APCD.

(A) Rules 213, 213.1, and 213.2.

(37) Revised regulations for the following APCD's submitted on February 10, 1977, by the Governor's designee.

(i) Southern California APCD.

(A) New or amended Rules 102, 468, 469, 474, 475, 476.

(B) Rule 430.

(C) Amended Rule 431.

(ii) San Diego County APCD.

(A) Rule 68.

(iii) San Luis Obispo County APCD.

(A) Rule 112, and Rules 404(A) through 404(B)(1)(a), 404(B)(1)(c), 404(B)(2), 404(B)(3), 404(B)(4), 404(c), 404(D), and 404(E).

(iv) Lake County APCD.

(A) Rules 500, 510, and 511.

(B) New or amended sections 100, 200 to 205.1, 207 to 234, 236, 238 to 260, 300, 301, 400, 401, 402 (A to E, and G), 410, 411, 412 (A and C), 430 to 439, 520, 530 to 533, 800, 900 to 902, 1000 to 1003, 1100, 1200, 1300, 1400, 1500, 1600, 1601, 1610, 1611, 1612, 1620, 1700, 1701, 1710 to 1714, 1720 to 1725, 1730, 1731 to 1736, and tables I, II, III, IV, and V.

(C) Previously approved and now deleted (without replacement) part II; sections 9, 15, 18, 28, 42, 43, 49a, 49b, 50, 52, and 54 of part III; sections 1 to 4 of part IV; section (1)(B) of part V; and parts IV and VI of Appendix B.

(v) Tuolumne County APCD.

(A) Rule 404.

(B) New or amended Rules 102, 202, 203, 206, 207, 208, 209, 213, 215, 216, 217, 301, 302, 303, 304, 308, 319, 321, 322, 323, 324, 402, 407, 409, 601, 602, 603, 604, 605, 700, 701, 702, 703, 704, 705, 706, 707, 708,

709, 710, 711, 712, 713, 714, 715, 716, and 717 and rescinded Rules 413 and 414.

(38) Revisions to air pollution emergency episode plans submitted on June 1, 1977 by the Governor's designee.

(i) South Coast Air Quality Management District's Regulation VII Emergencies as revised on May 6, 1977. No action has been taken on those portions of Rules 702, 703, 704, 706, 708, 708.2, 710, 711, 712 and 714 that pertain to sulfate, oxidant in combination with sulfate, or oxidant in combination with sulfur dioxide. No action has been taken on Rules 708.2(b)(3)(B), 708.2(b)(4)(B), 708.2(b)(4)(C) and 708.2(b)(5)(C).

(39) Revised regulations for the following APCDs submitted on June 6, 1977, by the Governor's designee.

(i) Great Basin Unified APCD.

(A) Rule 403.

(ii) San Bernardino County APCD (Southeast Desert portion).

(A) Rule 430.

(B) Rules 201–207, 209–212, 213, 213.1, 213.2, 214–217, and 219.

(C) New or amended Rules 104, 106, 208, 218, 401, 403, 53–A(a), 407 to 409, 431, 432, 441 to 443, 464 to 470, 472, 473, 475, 476, 503 to 508, 510 to 518, 801 to 817.

(D) Deleted without replacement Regulation VI—Orchard or Citrus Grove Heaters.

(E) Rules 703, 704 (except those portions that pertain to the criteria levels for carbon monoxide and sulfur dioxide), 705, 706, 707, 708, 709, 710, 711, 713, and 714.

(iii) Los Angeles County APCD (Southeast Desert portion).

(A) Rule 430.

(B) Rules 201–207, 209–212, 213, 213.1, 213.2, 214–217, and 219.

(C) New or amended Rules 101, 102, 2, 103 to 106, 208, 218, 301, 42, 401, 403 to 405, 407 to 409, 431, 432, 441 to 444, 461, 463 to 476, 502 to 518, 801 to 817.

(D) Deleted without replacement Rule 53.1, and Regulation VI—Orchard or Citrus Grove Heaters.

(E) Rules 701, 702, 703, 704 (except those portions that pertain to the criteria levels for carbon monoxide and sulfur dioxide), 705, 706, 707, 708, 709, 710, 711, 712, 713, 714, and 715.

(iv) Riverside County APCD (Southeast Desert portion).

(A) Rule 430.

(B) Rules 201–207, 209–212, 213, 213.1, 213.2, 214–217 and 219.

(C) New or amended Rules 103, 104, 208, 218, 301, 42, 401, 403 to 405, 53, 56, 407 to 409, 431, 432, 441 to 444, 463 to 476, 73, 503 to 518, 801 to 817.

(D) Deleted without replacement Regulation V—Orchard, Field or Citrus Grove Heaters.

(E) Rules 702, 703, 704 (except those portions that pertain to the criteria levels for carbon monoxide and sulfur dioxide), 705, 706, 707, 708, 709, 710, 711, 712, 713, 714, and 715.

(v) Yolo-Solano APCD.

(A) Amended Rule 2.21.

(vi) South Coast Air Quality Management District.

(A) Amended Rule 461.

(B) Amended Rule 431.

(vii) Mariposa County APCD.

(A) New or amended Rules 102(B), 102(E), 102(S), 102(II), 102(SS), 203 (with the exception of (D)), 206(B), 207, 208, 211, 215, 216, 301, 302, 303, 304, 308, 319, 320, 321, 322, 324, 402, 404, 407, 507, 514, 600, 603, and 610.

(B) Previously approved and now deleted (without replacement) Rule 203(k).

(viii) Sierra County APCD.

(A) New or amended Rules 102(B), 102(E), 102(S), 102(II), 102(SS), 203 (with the exception of (D) and (G)), 206(B), 207, 208, 211, 215, 216, 301, 302, 303, 308, 319, 320, 321, 322, 324, 402, 404, 407, 409, 507, 514, 516, 600 to 617.

(B) Previously approved and now deleted (without replacement) Rules 203(j) and 620.

(ix) Plumas County APCD.

(A) New or amended Rules 102(B), 102(E), 102(S), 102(II), 102(SS), 203 (with the exception of (D) and (G)), 206(B), 207, 208, 211, 215, 216, 301, 302, 303, 304, 307, 308, 319, 320, 321, 322, 324, 402, 404, 407, 409, 507, 514, 602 to 605, 700, 703, and 710.

(x) Nevada County APCD.

(A) New or amended Rules 102(B), 102(E), 102(S), 102(II), 102(SS), 103, 104, 203(e and i), 206(B), 207, 216, 304, 319, 320, 321, 402, 407, 409, 507, 514, 700, 703(E and I), 704, 710 and 711(A).

(40) [Reserved]

(41) Revised regulations for the following APCD's submitted on October 13, 1977, by the Governor's designee.

(i) Kings County APCD.

(A) New or amended Rules 412 and 412.2.

(ii) San Diego County APCD.

(A) New or amended Rules 2(b), 2(t), 2(u), 2(v), 2(w), 3, 19.2, 40, 42, 50, 52, 53, 54, 61.5, 64, 65, 66, 68, 71, 76, 77, 85, 95, 96, 101(f), 102(d), 102(e), 103(d), 103(g), 104, 109, and 177.

(*1*) Rule 65 is now removed without replacement as of March 14, 1989.

(B) Previously approved and now deleted (without replacement) Rule 113.

(C) Regulation VIII, Rules 126–138 and Appendix A, except as these rules apply to the 12-hour carbon monoxide episode criteria specified in Rule 127.

(iii) Bay Area APCD.

(A) New or amended rules: Regulation 1, section 3121 and Regulation 2, sections 3210.5 to 3210.11.

(iv) Ventura County APCD.

(A) New Rule 105.

(v) Kern County APCD.

(A) Rule 108.

(vi) San Luis Obispo County APCD.

(A) New Rule 113.

(vii) Monterey Bay Unified APCD.

(A) New Rules 215, 422.

(viii) Amador County APCD.

(A) New or amended Rules 102(C), 102(F), 102(AW), 103, 205(A)(1), 207, 212, 216, 302(A), 304, 305(C), 313(A), 507, 602.1, 604, 605, 701, 703(E) and 710.

(ix) Calaveras County APCD.

(A) New or amended Rules 102, 203 (with the exception of (D) and (G)), 206(B), 207, 208, 209, 211, 215, 216, 217, 301, 302, 303, 304, 319, 320, 321, 322, 323, 324, 402, 404, 407, 507, 602 to 604, 700, 702, 703, 710, and 715.

(B) Previously approved and now deleted (without replacement) Rule 203(J).

(x) Placer County APCD.

(A) New or amended Rules 101, 102, 103, 104, 203 (with the exception of (G)), 206, 207, 208, 210, 211, 213, 214, 301 to 311, 313 to 322, 401, 402, 404, 407, 408, 409, 507, 603 to 605, 702 to 704, 706, 708, 709, 710, 715, 801 to 804.

(xi) Tulare County APCD.

(A) New or amended Rules 108 and 412.1

(xii) Shasta County APCD.

(A) New or amended Rules 1:2 (with the exception of the definition of ''person''); 2:6(1)(a), (1)(b), (i–ii), (1)(b)(iii), (a, b, and d), (1)(b), (iv–vii), (1)(c), (i–vi and viii), (1) (d and e), (2) (a–d and f), (3) (a–c and e–g), (4) (a–c and e–i), (5) (b–d); 2:7, 2:8; 3:2 (except part VI and VII of table II, and explanatory notes 6 and 7); 3:4, 4:1, 4:5, 4:6, 4:14, and 4:19.

(xiii) Madera County APCD.

(A) Amended Rule 412.1.

(xiv) South Coast Air Quality Management District.

(A) New or amended Rules 101 and 102 (except for the definition of ''agricultural burning'').

(xv) Northern Sonoma County APCD.

(A) New or amended Rules 420(e) and (f), and 455(a) and (d).

(42) Revised regulations for the following APCD's submitted on November 4, 1977 by the Governor's designee.

(i) Imperial County APCD.

(A) New or amended Rules 100 to 110, 113 to 115, 301 to 303, 305, 401, 403 to 406, 408, 409, 411 to 416, 419 to 422, 501 to 516, and 701 to 706.

(B) Previously approved and now deleted (without replacement), Rules 106B, 113, 126, 131 and 147.

(C) Rules 601, 602 (except those portions that pertain to the criteria levels for carbon monoxide and sulfur dioxide), 603, 604, 605, 606, 607, 608, 609, 610, 611, 612, 613, and 614.

(D) New Rule 417 (A–H, and J).

(ii) Sacramento County APCD.

(A) Rules 3, 7(a) to 7(b)(2), 7b(4) to 7(d), 9, 11, 12, 13, 14, 15, 21, 22a, 23, 24, 25, 26, 94, 95, 96, 97, and 98.

(B) Rules 120, 121, 122, 125, and 126, except those portions that pertain to the 12-hour CO criteria level.

(iii) Kings County APCD.

(A) New or amended Rules 102, 103, 103.1, 104, 105, 108, 108.1, 110, 111, 112, 113, 401, 402(a) to 402(d), 402(f), 402(g), 404, 404.1, 405, 405.1, 405.2, 405.3, 406, 407.1, 409, 410, 416.1, 417, 417.1, 418, 421, and 501.

(B) Previously approved and now deleted, Rule 405.1.

(iv) Stanislaus County APCD.

(A) New or amended Rules 103.1, 108, 411.1.

(v) Merced County APCD.

(A) Amended Rules 411(b) and 411.1.

(vi) Kern County APCD.

(A) Rule 412.1.

(vii) San Luis Obispo County APCD.

(A) New or amended Rules 105(A)(1), 407, 501(A)(7), 502(A)(3).

(viii) Glenn County APCD.

(A) New or amended Rules 82, 152, and 154.

(ix) Great Basin Unified APCD.

(A) New or amended Rules 300, 423, and 617.

(B) Previously approved and now deleted (without replacement) Rules 411 and 418.

(x) El Dorado County APCD.

(A) New or amended Rules 102, 201, 203 [with the exception of (G)], 206(B), 207, 208, 215, 216, 217, 217–49 to 217–50, 217–51(A to D), 217–53 to 217–56, 217–1 to 217–3, 302, 303, 304, 307, 308, 319, 320, 321, 322, 324, 402, 407, 409, 507, 700, 703 and 710.

(xi) Fresno County APCD.

(A) New or amended Rules 411.1 and 416.1(g).

(xii) San Joaquin County APCD.

(A) New or amended Rules 108 and 411.2.

(xiii) San Bernardino County Desert APCD.

(A) New or amended Rules 101, 102, 103, 105, 404, 405, 406(a), 444, 461, 462, 463, 471, 474, 501, 502 and 509.

(B) Previously approved and now deleted without replacement Rules 44 and 53.1.

(C) Rules 701, 702, 712, and 715.

(xiv) Riverside County APCD.

(A) New or amended Rules 101, 102, 105, 461, and 501.

(B) Rule 701.

(xv) Del Norte County APCD.

(A) New or amended Rules 240(e), 420 (e) and (f), and 455 (a) and (d), and Appendix D to regulation 1.

(xvi) South Coast Air Quality Management District.

(A) New or amended Rules 218, 463, and 466.

(B) Rules 702 (map only) and 708.2.

(C) Rules 714 and 715.1 (except those portions that pertain to sulfate, oxidant in combination with sulfate, and oxidant in combination with sulfur dioxide).

(xvii) Humboldt County APCD.

(A) New or amended Rules 240(e), 420 (e) and (f), and 455 (a) and (d), and Appendix D to Regulation 1.

(xviii) Santa Barbara County APCD.

(A) New Rule 39.3.

(xix) Mendocino County APCD.

(A) New or amended Rules 240(e), 420 (e) and (f), and 455 (a) and (d), and Appendix D to Regulation 1.

(xx) Trinity County APCD.

(A) New or amended Rules 240(e), 420 (e) and (f), and 455 (a) and (d), and Appendix D to Regulation 1.

(xxi) Northern Sonoma County APCD.

(A) New or amended Rules 240(e), 310, and Appendix D to Regulation 1.

(xxii) Monterey Bay Unified APCD.

(A) Regulation VII, Rules 700–713.

(43) [Reserved]

(44) Revised regulations for the following APCD's submitted on June 22, 1978, by the Governor's designee.

(i) Great Basin Unified APCD.

(A) Amended Rule 419.

(ii) Santa Barbara County APCD.

(A) New Rule 24.15.

(iii) Ventura County APCD.

(A) New or amended Rules 2, 7, and 56 (with the exception of Sections B(2)(c) and C).

(iv) Yolo-Solano APCD.

(A) Amended Rules 1.2 (preamble), 1.4, 2.8(c)(2), 2.13(h)(4), 2.15, 2.17, 2.20, 4.4(b), 5.1, 5.4(e)(1), 5.10, 5.11, and 6.7(f).

(B) Previously approved and now deleted (without replacement) Rule 2.8(b)(4).

(v) South Coast Air Quality Management District.

(A) Rules 102, 501.1, and 503.

(vi) San Diego County APCD.

(A) New or amended Rules 66, 67.0, and 67.1.

(45) Revised regulations for the following APCD's submitted on July 13, 1978 by the Governor's designee.

(i) Bay Area APCD.

(A) New or amended Regulation 2, Division 3, sections 3210.11(B), 3211.2; Regulation 3, Division 3, § 3102.1; Regulation 9.

(ii) South Coast AQMD.

(A) Rules 302, 461, 465, 1102, and 1113.

(iii) San Diego County APCD.

(A) New or amended Rules 42, 76, and 97.

(46) The following Administrative Chapters of the California SIP, submitted on December 29, 1978, by the Governor's designee.

(i) Chapter 2—Statewide Perspective.

(ii) Chapter 20—Compliance.

(iii) Chapter 23—Source Surveillance.

(iv) Chapter 24—Resources.

(v) Chapter 25—Intergovernmental Relations.

(47) Revised regulations for the following APCD's submitted on January 2, 1979 by the Governor's designee.

(i) South Coast AQMD.
(A) New or amended Rules 301, 303, 708.3, 1201–1206, 1209–1211, 1214, 1217, 1220–1221, 1223–1224 and 1231.
(B) New or amended Rules 462, 481, and 1104.
(ii) Fresno County APCD.
(A) New or amended Rules 110, 416.1, and 519.
(B) New or amended Rule 409.1.
(iii) Kern County APCD.
(A) New or amended Rules 111, 301, and 519.
(B) Rule 412.
(iv) Lake County APCD.
(A) New or amended Rules 435, and 436, and Tables V and VI.
(v) Monterey Bay Unified APCD.
(A) Amended Rule 301.
(vi) Siskiyou County APCD.
(A) Amended Rule 4.3.
(vii) San Luis Obispo County APCD.
(A) Rule 407.
(B) New or amended Rule 201.
(48) Chapter 3—Legal Authority of the California SIP, submitted on March 16, 1979, by the Governor's designee.
(49) Addendum to Chapter 23 of the California SIP submitted on March 29, 1979, by the Governor's designee.
(50) Revised regulations for the following APCD's submitted on May 7, 1979, by the Governor's designee.
(i) Del Norte County APCD.
(A) New or amended Rules 240, 410 (a) and (c), and 615.
(ii) Humboldt County APCD.
(A) New or amended Rules 240, 410 (a) and (c), 615.
(iii) Mendocino County APCD.
(A) New or amended Rules 240, 410, and 615.
(iv) Trinity County APCD.
(A) New or amended Rules 240, 410 (a) and (c), and 615.
(v) Northern Sonoma County APCD.
(A) New or amended Rules 240, 300, 310, 320, 410 (a) and (c), 420, 540, 615.
(vi) Merced County APCD.
(A) New or amended Rule 409.1.
(B) New or amended Rule 519.
(vii) Modoc County APCD.
(A) New or amended Rules 1:2 w, 2:11, 2:15, 3:3 and 3:4.
(viii) Monterey Bay Unified APCD.
(A) Rules 403 and 602.
(ix) Ventura County APCD.
(A) New or amended Rules 71 and 71.3.
(B) New or amended Rule 11.
(x) San Diego County APCD.
(A) New or amended Rule 10(h) and deletion of Rule 43.
(51) Revised regulations for the following APCD's submitted May 23, 1979, by the Governor's designee.
(i) Kern County APCD.
(A) Amended Rules 305 and 503.
(B) Rules 410.1 and 424.
(ii) Monterey Bay Unified APCD.
(A) Rule 417.
(B) Rule 617.
(iii) Del Norte County APCD.
(A) New or amended Rules 130, 300, 310, 320, 420, 540 and Regulation 1/Appendix D.
(iv) Humboldt County APCD.
(A) New or amended Rules 130, 300, 310, 320, 420, 540 and Regulation 1/Appendix D.
(v) Mendocino County APCD.
(A) New or amended Rules 130, 300, 310, 320, 420, 540 and Regulation 1/Appendix D.
(vi) Trinity County APCD.
(A) New or amended Rules 130, 300, 310, 320, 420, 540 and Regulation 1/Appendix D.
(vii) San Diego County APCD.
(A) Amended Rules 2(t), 61.5, and 61.7.
(B) New or amended Rules 19.2(d)(4), 50, 62(a), 66(P) and (W), 95, and 98.
(C) New or amended Rule 11.
(viii) San Joaquin County APCD.
(A) New or amended Rule 409.1.
(B) New or amended Rules 110 (a), (b), and (d)–(i), 301, 303–311, and 511.
(C) New or amended Rules 102, 108.2, 110(c), 302, 401, and 521.
(ix) Stanislaus County APCD.
(A) New or amended Rule 409.1.
(B) New or amended Rule 110 (A), (B) and (D)–(I).
(C) New or amended Rules 110(c) and 519.
(x) Tulare County APCD.
(A) New or amended Rules 410.1 and 413.
(B) New or amended Rules 111 (a), (b), and (d)–(i), 402, and 417.
(C) New or amended Rules 108, 111(c), 201, 410 and 519.
(xi) Lake County APCD.
(A) New Rules 227.1, 254.1, and 660.
(xii) San Bernardino County Desert APCD.
(A) New Rules 480 and 501.1.
(B) New or amended Rules 442, 463, and 1113.

(xiii) Santa Barbara County APCD.

(A) New or amended Rules 101, 102, 103, 104, 201(A, B, D, E, F, and G), 202, 203, 204, 205(A and B), 206, 207, 208, 209, 210, 211, 301, 302, 304, 305, 306, 307, 308, 309, 311, 312, 313, 314, 315, 317, 319, 322, 324, 328, 401, 402, 403, 501, 502, 503, 504, 505, 505–A, 506, 507, 508, 509, 510, 511, 512, 513, 514, 515, 516, 517, 518, 519, 601, 602, 603, 604, 605, 606, 607, 608, 609, and 610.

(xiv) El Dorado County APCD—Lake Tahoe Air Basin Portion.

(A) New or amended Rules 101, 102 (except LAER, stationary source, modification definitions), 103, 104, 201–203, 206A–212, 217, 301–305, 307–310, 312–321, 404, 702–704, 706–710, and 801–804. Deleted Rules 59(g)(1), 102I, 102S, 102BB, 102FF, 102GG, 102LL, 102RR, 208, 214, 601, 602, and 700.

(B) Amended Rule 306.

EDITORIAL NOTE: At 47 FR 27068, June 23, 1982, the following paragraph (c)(51)(xiv)(B) was added to § 52.220.

(B) New or amended Rules 102, LAER, stationary source, and modifications; 213; and 214.

(xv) Placer County APCD—Mountain Counties Air Basin Portion.

(A) New or amended Rules 404, 602, and 603.

(B) Deletion of Rules 604 and 605.

(xvi) Sacramento County APCD.

(A) Amended Rule 71.

(xvii) Shasta County APCD.

(A) Amended Rule 3.4.

(xviii) Sierra County APCD. (A) New or amended Rules 207, 210, 211, 218 and 618.

(xix) Tehama County APCD.

(A) Amended Rule 2.1 and previously approved and now deleted Rule 2.9 (Action on Applications).

(xx) Ventura County APCD.

(A) New or amended Rules 6, 8, 9, 13, 24, 40, 63, 75, 102, 103, 110, 111, 112, 113, 114, 120, 121, 123, 124, 125, 126, 127, and 130.

(52) Revised regulations for the following APCD's submitted October 15, 1979, by the Governor's designee.

(i) Kern County APCD.

(A) Amended Rule 302

(B) Rules 410.4, 410.5, and 414.2.

(ii) Imperial County APCD.

(A) Rules 415.1 and 424.

(B) New or amended Rules 101 L, 110, 201B, 301, 302, 304, 306, 401, 404, 406, 408, 410, 417 I, 418, 419, 422, Regulation VI, 701, 702, 703 (deletion), 705, and 706.

(iii) [Reserved]

(iv) Kings County APCD.

(A) New or amended Rules 210.1 (except paragraphs (3)(D) and (5)(B)(8)), 210.2, 410.1, 410.2, 410.3, 410.5, 412.1, 413, 414.1, and 414.2.

(B) New or amended Rules 111 (A), (B), and (D)–(I), 301, 302, and 401.

(C) New or amended Rules 111(c), and 519.

(v) Madera County APCD.

(A) New or amended Rules 210.2, 410.1, 410.3, 410.5, 411, and 412.

(B) New or amended Rules 102, 103, 103.1, 104, 105, 108, 108.1, 110, 115, 210.3, 301, 305, 402(a)–(e), 409, 410, 416, 417, 418, 501, 504, 511, 601, 602, 603, 606–611, and 612.

(C) New or amended Rules 111(c) 402(f) and 519.

(vi) Merced County APCD.

(A) New or amended Rules 210.1 (except paragraphs (3)(D) and (5)(B)(8)), 210.2, 409.5, and 411.

(B) New or amended Rules 109 (A), (B), and (D)–(I).

(C) New or amended Rule 109(c).

(vii) San Joaquin County APCD.

(A) New or amended Rules 209.1 (except paragraphs (B)(3) and (D)(2)(b)), 209.2, 409.3, 410, 411.1, 413, 413.1, 413.2, and 413.3.

(B) New or amended Rule 209.3.

(C) New or amended Rule 209.4.

(viii) Stanislaus County APCD.

(A) New or amended Rules 209.2 and 411.

(ix) Tulare County APCD.

(A) New or amended Rules 210.1 (except paragraphs (C)(4) and (e)(2)(H)), 210.2 and 410.5.

(B) New or amended Rules 301 and 302.

(x) Lake County APCD.

(A) Amended Rule 433.

(xi) Amador County APCD.

(A) New or amended Rules 102, 103, 107, 203, 206B, 207, 209–211, 213, 215, 216, 301–313, 315–324, 401, 402, 404, 407, 409, Regulation VI, 700–704, 710, and 711.

(xii) Nevada County APCD.

(A) New or amended Rules 207, 210, 211, 218, 306, 307, and 404.

(xiii) Placer County APCD—Mountain Counties Air Basin Portion.

(A) New or amended Rules 101, 102, 104, 201, 202, 207, 210, 211, 220–222, 301–310, and 312–323.

(B) New or amended Rules 215 and 219.

(C) Rule 508 (except paragraph (c)(3)(h)).

(D) New or amended Rules 501B, 502, 504, 506, 512, and 513.

(xiv) Tuolumne County APCD.

(A) New or amended Rules 207, 210, 218, and 404.

(xv) Fresno County APCD.

(A) New or amended Rules 210.1 [except paragraphs (3)(D) and (5)(B)(8)], 210.2, 409.5, 409, 409.3, 409.4, and 411.

(B) New or amended Rules 301, 302, and 305.

(xvi) Yuba County APCD.

(A) New or amended Rules 1, Section 1 (except Silviculture Deletion), 1.1 (except PPM), 2.0–2.2, 2.4 except (a), 2.5–2.12, 2.15–2.20, 2.22–2.24, 2.27, 2.30, Section 5 (Deletion), 5.0–5.3, 5.5–5.19, 6.1–6.7, 7, 7.1 and 8.1.

(B) New or amended Rules 2.3 and 2.4(a).

(xvii) San Diego County APCD.

(A) New or amended Rule 67.7 and 67.2.

(xviii) Shasta County APCD.

(A) New or amended Rules 1.1, 1.2, 2.11, 2.12, and 3.2 (except rows (vi) and (vii)).

(B) Amended Rule 2:5.

(xix) Yolo—Solano APCD.

(A) New or amended Rules 4.1–4.3.

(B) New or amended Rules 301, 302, and 305.

(xx) Sacramento County APCD.

(A) New or amended Rule 1.

(xxi) Siskiyou County APCD.

(A) New or amended Rules 2.14–2.16.

(53) Revisions to air pollution emergency episode plans submitted on February 14, 1980 by the Governor's designee.

(i) Bay Area Air Quality Management District Rules 100, 101, 300, 301, 302, 303, 304, 305, 400, 401, 402, 403, and 404.

(54) Revised regulations for the following APCD's submitted on February 25, 1980, by the Governor's designee.

(i) Ventura County APCD.

(A) Rules 150, 152, 153, 154, 155, 156, 157, 158, 159, 160, 161, and 162.

(B) New or amended Rule 71.1.

(C) New or amended Rules 56, 80, 81, and deletion of Rules 17, 151, 163, and 164.

(ii) Monterey Bay Unified APCD.

(A) Rule 422 and deletion of Rule 508.

(B) Amended Rule 416.

(iii) San Luis Obispo County APCD.

(A) Rules 301, 302, 303, and 304.

(iv) Yolo—Solano APCD.

(A) Amended Rule 5.4.

(B) New or amended Rules 2.21, 2.21.1, 2.24 and 2.25.

(C) New or amended Rule 3.13.

(v) Sacramento County APCD.

(A) New or amended Rule 17.

(B) [Reserved]

(C) New or amended Rules 3.13, 3.4.1, and 3.4.2.

(vi) Sutter County APCD.

(A) New or amended Rules 1.4, 2.8.1 (Deletion), 2.17, and 2.82.

(vii) Yuba County APCD.

(A) Amended Rule 2.26.

(viii) Butte County APCD.

(A) New Rule 2–12.e.

(B) Amended Rules 4.5A and 4.5B.

(ix) Tehama County APCD.

(A) Amended Rules 2.5A and 2.5B.

(x) Colusa County APCD.

(A) New or amended Rules 2.7 A and B.

(xi) Glenn County APCD.

(A) New or amended Rules 51.1 and 51.2.

(xii) Shasta County APCD.

(A) New or amended Rules 1:2 (Best Available Control Technology, Stationary Source and Precursor) and 2:1 A.

(55) The following material for Imperial County was submitted on October 11, 1979 by the Governor's designee.

(i) Summary of Plan Compliance with Clean Air Act Requirements.

(ii) Imperial County plan to attain National Ambient Air Quality Standards for oxidants, October 31, 1978.

(iii) SIP Revision—Imperial County ARB Staff Report, No. 79–4–2.

(iv) ARB resolution 79–9, February 21, 1979.

(v) Copies of Board hearing testimony.

(56) Revised regulations for the following APCDs submitted on March 17, 1980, by the Governor's designee.

(i) Imperial County APCD.

(A) Rules 207 [except Subparagraph C.4.], 208, and 209.

(ii) Ventura County APCD.

(A) Amended Rule 26.3.

(B) New or amended Rules 10, 25, and 27.

(57) The *North Central Coast Air Basin Strategy* (Chapter 10 of the comprehensive revisions to the State of California Implementation Plan for the Attainment and Maintenance of Ambient Air Quality Standards) submitted on September 12, 1979 by the Governor's designee.

(58) Revised regulations for the following APCDs submitted on December 17, 1979 by the Governor's designee.

(i) Monterey Bay Unified APCD.

(A) Rules 418, 425 and 426.

(B) New or amended Rules 300, 405, and 601.

(ii) South Coast AQMD.

(A) New or amended Rules 1107, 1108, 1108.1 and 1128.

(B) New or amended Rules 404, 442, 501.1, 502, 504.1(b), (c), and (d), and 1124.

(iii) Great Basin Unified APCD.

(A) New or amended Rules 205, 210, 300A, and G, 403, 408, 419, and 617.

(B) New or amended Rules 203, 209–A and B, 212, and 213.

(iv) Ventura County APCD.

(A) New or amended Rule 74.3.

(v) Butte County APCD.

(A) New or amended Rules 2.12a, 2.12b, 2.12c, and 2.12d.

(vi) Shasta County APCD.

(A) New or amended Rules 1.2, 3.14, and 3.15.

(vii) Yolo—Solano APCD.

(A) Amended Rules 2.8 and 6.6.

(viii) San Luis Obispo County APCD.

(A) New or amended Rule 407.

(ix) Modoc County APCD.

(A) New or amended Rule 2:8–e.

(59) Revised regulations for the following APCD submitted on March 4, 1980 by the Governor's designee.

(i) Monterey Bay Unified APCD.

(A) Rules 207 (except B.4.) and 208.

(B) New or amended Rules 205, 211, 212, 213, and 214.

(60) Chapter 4, *California Air Quality Control Strategies*, of the California SIP, submitted on May 23, 1979, by the Governor's designee.

(61) Redesignation of AQCR's in California, submitted on September 11, 1978, by the Governor's designee.

(62) The *San Diego Air Basin Control Strategy* (Chapter 14 of the Comprehensive Revisions to the State of California Implementation Plan for the Attainment and Maintenance of Ambient Air Quality Standards) submitted on July 5, 1979, by the Governor's designee, except the inspection/maintenance portion. Additional documents were also submitted as appendices. Those portions of the *San Diego Air Basin Control Strategy*, including Appendices, identified by Table 14–1, ''Location of Plan Elements Which Meet Clean Air Act Requirements'' (pages 6–7), comprise the submitted nonattainment area plan, except the inspection/maintenance portion. The remaining portions are for informational purposes only.

(63) The following portions of the *California Environmental Quality Act* submitted on October 20, 1980, by the Governor's designee: Sections 21000; 21001; 21002; 21002.1; 21061; 21063; 21065; 21080.1; 21080.4; 21080.5 (a), (b), (c) and (d); 21081; 21082; 21100; 21104; 21151; 21153; 21160.

(64) Revised regulations for the following APCD submitted on February 13, 1980, by the Governor's designee.

(i) San Diego County APCD.

(A) Rules 20.1, 20.2, 20.3, 20.4, 20.5 and 20.6.

(65) The following amendments to the plan were submitted on July 25, 1979, by the Governor's designee.

(i) The *South Coast Air Basin Control Strategy* (Chapter 18 of the Comprehensive Revision to the State of California Implementation Plan for the Attainment and Maintenance of Ambient Air Quality Standards). Those portions of the *South Coast Air Basin Control Strategy* identified by Table 18–1, ''Location of Plan Elements Which Meet Clean Air Act Requirements,'' together with Rules 1115 and 1126, comprise the submitted nonattainment area plan control strategy. The remaining portions are for informational purposes only.

(ii) New or amended Rules 218, 431, 431.1–431.3, 1120, 1206–1208, 1212, 1213, 1215, 1216, 1218, 1219, 1222, and 1225–1230.

(66) Revised regulations for the following APCD's, submitted on February 7, 1980, by the Governor's designee.

(i) South Coast AQMD.

(A) New or amended Rule 461.

(B) Amended Rule 466.

(ii) Bay Area AQMD.

(A) Regulation 8: Rule 1, 2 (except paragraph 301), 4, 7, 8, 9, 10, 11, 13, 14, 15, 16, 18 and 19.

(67) Revised regulations for the following APCD's, submitted on April 2, 1980, by the Governor's designee.

(i) South Coast AQMD.

(A) New or amended Rule 1122.

(B) New or amended Rules 107, 709(c), 1111, 1121 and 1140.

(ii) Bay Area AQMD.

(A) New or amended Regulation 9, Rules 9–4–100, 9–4–101, 9–4–200 to 9–4–203, 9–4–300, 9–4–301, 9–4–303, and 9–4–400 to 9–4–404.

(iii) Kern County APCD.

(A) New or amended Rules 412.1(b)–(f).

(B) New Rule 411.1.

(iv) Sacramento County APCD.

(A) New or amended Rules 7, 24, 25, 28, 30, and 53.

(B) New or amended Rules 120, 121, and 122.

(68) Revised regulations for the South Coast AQMD, submitted on April 3, 1980, by the Governor's designee.

(i) New or amended Rules 1301, 1303, 1304, 1305, 1306, 1307, 1310, 1311, and 1313.

(69) Revised regulations for the South Coast AQMD submitted on April 23, 1980, by the Governor's designee.

(i) New or amended Rules 464, 465, 1123, and 1125.

(ii) New or amended Rules 301, 405, 431.2(c)(5), 701, 702 (a), (d), (e), (f), (h) and (i), 703–706, 708.3(a), (b)(8)–(b)(10), 708.4(g) and (h), 709(a), 710(a) and (b)(4), 711(a)(1), (a)(4), (b)(1) and (b)(4), and 713–715.

(iii) New Rule 1103.

(iv) California Health and Safety Code, Sections 41950 to 41962, 94000 to 94004; and Stationary Source Test Methods—Volume 2: Certification and Test Procedures for Gasoline Vapor Recovery Systems submitted on April 23, 1980.

(70) Revised regulations for the following APCD's submitted on August 15, 1980, by the Governor's designee.

(i) South Coast AQMD.

(A) New or amended Rules 1302 and 1308.

(B) New or amended Rule 1101.

(C) New or amended Rules 702(b), 707, 708, 708.3 (a)(2) and (c), 708.4 (a) and (b), 709(e), 710 (b)(1)(D), (b)(2)(D), (b)(3)(B), and (c)(3)(B), 711 (a)(1)(E), (a)(2)(D), (a)(3)(B), (a)(4)(F), (b)(3)(B), and (b)(4)(f), and 1102.

(D) Amended Rule 401 (except subparagraph 401(b)).

(ii) San Diego County APCD.

(A) New or amended Rules 2 (z) and (aa), 40, and 10 (f) and (i).

(iii) Shasta County APCD.

(A) Amended Rule 3.3.

(iv) El Dorado County APCD (Mountain Counties and Lake Tahoe Air Basin).

(A) New or amended Rules 601–613.

(71) The *San Joaquin Valley Air Basin Control Strategy* (Chapter 16 of the Comprehensive Revisions to the State of California Implementation Plan for the Attainment and Maintenance of Ambient Air Quality Standards) submitted on October 11, 1979, by the Governor's designee. Those portions of the *San Joaquin Valley Air Basin Control Strategy* identified by Tables 16–1a, 1b and 1c (Summary of Plan Compliance with Clean Air Act Requirements) except which pertain to Fresno County and the sixtransportation control measures for Stanislaus County, comprise the submitted plan. The remaining portions are for informational purposes only. The following rules were also submitted on October 11, 1979 as part of the enforceable plan:

EDITORIAL NOTE: At 47 FR 28620, July 1, 1982, the following introductory text to paragraph (c)(71) was added to § 52.220.

(71) The *San Joaquin Valley Air Basin Control Strategy* (Chapter 16 of the Comprehensive Revisions to the State of California Implementation Plan for the Attainment and Maintenance of Ambient Air Quality Standards) submitted on October 11, 1979, by the Governor's designee. Those portions of the *San Joaquin Valley Air Basin Control Strategy* identified by Tables 16–1a, 1b and 1c (Summary of Plan Compliance with the Clean Air Act Requirements) comprise the submitted plan. The remaining portions are for informational purposes only.

(i) Kings County APCD.

(A) New or amended Rules 411 and 413.3.

(ii) Madera County APCD.

(A) New or amended Rule 210.1 (except paragraphs (3)(D) and (5)(B)(8)).

(iii) Merced County APCD.

(A) New or amended Rules 409.3 and 410.

(iv) Tulare County APCD.

(A) New or amended Rule 410.3.

(72) The San Francisco Bay Area Basin Control Strategy (Chapter 15 of the Comprehensive Revisions to the State of California Implementation Plan for the Attainment and Maintenance of Ambient Air Quality Standards) including appendices, submitted on July 25, 1979, by the Governor's designee.

(73) Revised regulations for the following APCD's submitted on January 14, 1980, by the Governor's designee.

(i) Bay Area AQMD.

(A) Regulation 2: Rule 1: 2–1–200, 2–1–300, 2–1–307, and 2–1–400, Rule 2: 2–2–100, 2–2–200, 2–2–209, 2–2–210, 2–2–300, and 2–2–400; Rule 3: 2–3–100, 2–3–101, 2–3–200, 2–3–201, 2–3–300, 2–3–301, 2–3–302, 2–3–401, 2–3–401.1 to 2–3–401.3, 2–3–402, 2–3–403, 2–3–404, and 2–3–405.

(B) New or amended Regulation 2, Rule 1: 2–1–100 to 2–1–102, 2–1–111, 2–1–112, and 2–1–408.

(74) Revised regulations for the following APCD's submitted on December 24, 1979, by the Governor's designee.

(i) Imperial County APCD.

(A) New or amended Rules 111, 413, 414, 416, 416 (deletion), and 517.

(ii) Santa Barbara County.

(A) Rule 316.

(iii) Ventura County APCD.

(A) New Rule 70 (except paragraph E).

(75) Revised regulations for the Kern County APCD, submitted on January 8, 1980, by the Governor's designee.

(i) Rules 210.2, 410.3, 411, 414, 414.1, and 414.3.

(ii) New or amended Rule 424(F).

(76) Revised regulations for the following APCD's, submitted on April 15, 1980, by the Governor's designee.

(i) Kern County APCD.

(A) Amended Rule 210.1

(77) The following amendments to the plan were submitted on October 18, 1979, by the Governor.

(i) San Luis Obispo County APCD.

(A) New or amended Rules 415, 416, 420, and 422.

(ii) The South Central Coast Air Basin Control Strategy [Chapter 17 of the Comprehensive Revision to the State of California Implementation Plan for the Attainment and Maintenance of Ambient Air Quality Standards]. Those portions of the South Central Coast Air Basin Control Strategy identified by Tables 17–1 and 17–2 ''Location of Plan Elements Which Meet Clean Air Act Requirements'' together with the rules identified below comprise the submitted nonattainment area plan. The remaining portions are for informational purposes only.

(A) Santa Barbara County APCD Rules 320, 321, 323, 327, 329 to 332, 201.C and 205.C. (except subparagraph 5.b.8.).

(B) Ventura County APCD Rules 26 (except 26.2, 26.3 and 26.4), 74.4, 74.7, and 74.8.

(78) Revised regulations for the following APCD submitted on November 19, 1979, by the Governor's designee.

(i) South Coast AQMD.

(A) Deletion of Rules 67 and 72.

(ii) California Lead SIP.

(79) Revised regulations for the following APCD's submitted on June 2, 1980, by the Governor's designee.

(i) Monterey Bay Unified APCD.

(A) Rule 427.

(ii) Bay Area AQMD.

(A) New or amended Regulation 1, Rules 1–100 to 1–111, 1–114, 1–200 to 1–205, 1–207 to 217, 1–219 to 1–232, 1–400 to 1–402, 1–410 to 1–412, 1–420, 1–430 to 1–434, 1–440, 1–441, 1–500 to 1–502, 1–510, 1–521, 1–530, 1–540, 1–541, 1–543, 1–544; Regulation 5, Rules 5–100, 5–101, 5–110, 5–111, 5–200 to 5–207, 5–300, 5–301, 5–400 to 5–404; Regulation 6, Rules 6–100, 6–101, 6–200 to 6–204, 6–300 to 6–304, 6–310, 6–312,6–320, 6–330, 6–400, 6–401, 6–500 to 6–502; Regulation 11, Rules 11–1–100 to 11–1–102, 11–1–300 to 11–1–303; Regulation 12, Rules 12–2–100, 12–2–101, 12–2–200, 12–2–201, 12–2–300, 12–2–301, 12–2–500, 12–2–501, 12–3–100, 12–3–101, 12–3–300, 12–3–301, 12–3–500, 12–3–501–12–4–100 to 12–4–102, 12–4–200 to 12–4–212, and 12–4–300 to 12–4–307.

(B) New or amended Regulation 1: 1–206, 1–520, 1–542, and 1–600 to 1–604; Regulation 6: 6–305, 6–311, 6–600, and 6–601; and Regulation 11: 11–1–500, 11–1–501, and 11–1–600 to 11–1–603.

(iii) Ventura County APCD.

(A) New or amended Rule 2.

(B) New or amended Rule 59.

(iv) South Coast AQMD.

(A) Deletion of Rule 471.

(B) New Rule 466.1.

(v) San Diego County APCD.

(A) New or amended Rules 1, 2 (a), (b), (t), (v), (u), (x), and (y), 14, 17, 67.0, and 67.1.

(vi) Shasta County APCD.

(A) New Rule 3.17.

(80) The following amendments to the plan were submitted on August 21, 1979 by the Governor's designee.

(i) Revised regulations for Placer County APCD—Lake Tahoe Air Basin Portion.

(A) New or amended Rules 101–104, 201–204, 206–211, 215, 217, 301–308, and 310–319.

(B) New Rule 507.

EDITORIAL NOTE: At 47 FR 27068, June 23, 1982, the following paragraph (c)(80)(i)(B) was added to §52.220.

(B) New or amended Rules 212, 213, 508 (except Paragraph (1)(C)(3)(h), and 514.

(C) New or amended Rules 502–506 and 511–513.

(ii) Chapter 8, Lake Tahoe Basin Control Strategy, including Support Documents and Appendices. The Transportation Improvement Program and Regional Transportation Plan are for informational purposes only.

(81) Revised regulations for the following APCD, submitted on February 11, 1980 by the Governor's designee.

(i) El Dorado County APCD—Lake Tahoe Air Basin Portion.

(A) New or amended Rules 507, 511–515, and 519–528.

(B) New or amended Rules 501 to 506, 508 to 510, and 516 to 518.

(82) [Reserved]

(i) Ventura County APCD.

(A) New or amended Rule 74.6.

(83)(i)(A) [Reserved]

(B) New Rules 22, 23, and 27.

(C) New or amended Regulation 8: Rule 21.

(ii) Kings County APCD.

(A) New or amended Rule 414.

(iii) [Reserved]

(A) Rule 410.

(B) New or amended Rules 411.1 and 416.1.

(84) Revised regulations for the following APCDs submitted on October 10, 1980, by the Governor's designee.

(i) Madera County APCD.

(A) New or amended Rule 410.4.

(ii) Merced County APCD.

(A) New or amended Rule 409.4.

(iii) Kings County APCD.

(A) New or amended Rule 410.4.

(iv) San Joaquin County APCD.

(A) New or amended Rule 409.4.

(v) Stanislaus County APCD.

(A) New or amended Rule 409.4.

(vi) Tulare County APCD.

(A) New or amended Rule 410.4.

(vii) Modoc County APCD.

(A) Amended Rule 3:12.

(85) Revised regulations for the following APCDs submitted on December 15, 1980, by the Governor's designee.

(i) Tulare County APCD.

(A) New or amended Rule 412.

(B) New or amended Rule 412.1.

(C) New or amended Rules 201 and 417.1.

(ii) Madera County APCD.

(A) New or amended Rule 412.1

(B) New or amended Rules 201, 202, 301, and 417.1.

(iii) Sacramento County APCD.

(A) New or amended Rule 13.

(iv) San Diego County APCD.

(A) New or amended Rules 61.0, 61.0 (n) and (o), 61.1, 61.1(a)(1) (i) and (h), 61.2, 61.2(a), 61.3 and 61.4

(v) San Bernardino County APCD, Southeast Desert Air Basin portion.

(A) New or amended Rules 461 and 462.

(vi) Tehama County APCD.

(A) New or amended Rules 1.2, 1.3, 2.7, 2.8, 2.9, 3.1, 3.2, 3.3–3.14, 4.1, 4.2, 4.6, and 4.7.

(B) Previously approved and now deleted Rule 2.8 (Further Information).

(vii) Santa Barbara County APCD.

(A) New or amended Rule 210.

(viii) South Coast AQMD.

(A) New Rule 1130.

(ix) Kings County APCD.

(A) New or amended Rule 417.1.

(x) Kern County APCD.

(A) New or Amended Rules 110 and 417.1.

(86) Revised regulations for the following APCD's submitted on July 10, 1980 by the Governor's designee.

(i) Bay Area AQMD.

(A) Regulation 8: Rule 2 (Paragraph 301).

(B) New Rules 17 (paragraphs 112, 302, 400, and 401) and 26.

(C) New or amended Regulations, Rules 1–206, 1–218, 6–311, 9–1–100, 9–1–101, 9–1–110 9–1–200 to 9–1–204, 9–1–300 to 9–1–308, 9–1–310, 9–1–311, 9–1–400 to 9–1–404, 9–1–500 to 9–1–502, and 9–4–302.

(D) New or amended Rule 1–541 and Regulation 9, Rules 9–1–600 to 9–1–605.

(ii) Butte County APCD.
(A) Amended Rule 4.9.
(87) Revised regulations for the following APCD's submitted on September 5, 1980 by the Governor's designee.
(i) Bay Area AQMD.
(A) Regulation 8: Rule 5, Rule 6, and Rule 12.
(B) New Rules 25 and 28 (except section 401).
(ii) San Diego County APCD.
(A) New or amended Rule 19.
(iii) San Joaquin County APCD.
(A) New or amended Rule 411.2.
(B) New or amended Rules 202 and 416.1.
(iv) San Bernardino County APCD, Southeast Desert Air Basin portion.
(A) New or amended Rules 1301, 1302, 1303, 1304, 1305, 1306, 1307, 1308, 1310, 1311, and 1313.
(v) Los Angeles County APCD, Southeast Desert Air Basin portion.
(A) New or amended Rules 1301, 1302, 1303, 1304, 1305, 1306, 1307, 1308, 1310, 1311, and 1313.
(vi) Sacramento County APCD.
(A) New or amended Rules 74, 90, 92, 93, 94, 95, 96, 98, and Regulation VII.
(vii) Ventura County APCD.
(A) New or amended Rules 2 and 55.
(viii) Shasta County APCD.
(A) New Rule 2:6.
(88) Revised regulations for the following APCDs submitted on July 25, 1980, by the Governor's designee.
(i) Stanislaus County APCD.
(A) New or amended Rule 209.1 (except paragraphs (3)(E) and (5)(B)(8)).
(B) New or amended Rules 103 and 305.
(C) New or amended Rules 202 and 416.1.
(ii) Bay Area AQMD.
(A) New or amended Regulation 3, Rules 3–100 to 3–103, 3–200 to 3–206, 3–208 to 3–211, 3–300 to 3–311, and 3–400 to 3–408.
(iii) South Coast AQMD.
(A) New or amended Rule 1119.
(B) Amended Rule 462.
(iv) [Reserved]
(v) Merced County APCD.
(A) New or amended Rule 411.1.
(B) New or amended Rules 202 and 416.1.
(89) Revised regulations for the following APCDs submitted on March 30, 1981, by the Governor's designee.
(i) Kings County APCD.
(A) New or amended Rule 411.
(ii) Yolo-Solano County APCD.
(A) New or amended Rule 2.13(h)(6).
(iii) Yuba County APCD.
(A) Amended Rules 3.8, 3.12, and 3.15.
(iv) Imperial County APCD.
(A) New Rule 418.1.
(v) Monterey Bay Unified APCD.
(A) New Rule 425.
(vi) Lake County APCD.
(A) New or amended Sections 101, 227.4, 301, 1602, and Table VI.
(vii) South Coast AQMD.
(A) Amended Rule 1102.1.
(90) The following amendments to the plan were submitted on December 31, 1979, by the Governor's designee.
(i) Chapter 22—Air Quality Monitoring by State and Local Air Monitoring Stations (SLAMS).
(91) The following amendments to the plan were submitted on November 13, 1979, by the Governor's designee.
(i) The Sacramento Valley Air Basin Control Strategy (Chapter 13 of the Comprehensive Revisions to the State of California Implementation Plan for the Attainment and Maintenance of Ambient Air Quality Standards): those portions pertaining to the Sacramento Metropolitan Area including the following rules:
(A) Placer County APCD (Mountain Counties Air Basin portion) Rules 212, 217, and 218.
(B) Sacramento County APCD Rules 6, 11, 12, 16, 19, and 56 (except paragraph (5)(a)(8)).
(C) Yolo-Solano County APCD Rules 2.14 and 3.4 [except paragraph (5)(a)(8)].
(ii) The Sacramento Valley Air Basin Control Strategy [Chapter 13 of the Comprehensive Revisions to the State of California Implementation Plan for the Attainment and Maintenance of Ambient Air Quality Standards]: those portions pertaining to Butte, Yuba, and Sutter Counties, including the following rules:
(A) Butte County APCD Rules 2.12f and 4–5.
(92) Revised regulations for the following APCDs submitted on May 28, 1981, by the Governor's designee.
(i) Stanislaus County APCD.
(A) New or amended Rule 409.5.
(ii) Placer County (Mountain Counties Air Basin portion).

(A) New or amended Rules 213, 216, and 223.
(B) New or amended Rules 102, 203, 211, 301, 305, 306, 324, 325, 601, and 702.
(C) Rule 214.
(iii) Lake County APCD.
(A) New Rule 216.1.
(iv) Great Basin Unified APCD.
(A) New or amended Rules 101, 300, 404–A, 423, and 424.
(v) San Diego County APCD.
(A) New or amended Rules 127, 130, 131, 132, and 134.
(B) New or amended Rule 21.
(vi) South Coast AQMD.
(A) New or amended Rule 1113.
(93) Revised regulations for the following APCDs submitted on June 22, 1981, by the Governor's designee.
(i) Stanislaus County APCD.
(A) New or amended Rule 409.3.
(B) New or amended Rule 409.8.
(ii)(A) [Reserved]
(B) New Rule 28, Section 401.
(C) New or amended Regulation 5, Rule 5–401.3.
(iii) Plumas County APCD.
(A) New or amended Rules 203, 301–319, 512–516, 703, and 710.
(B) New or amended Rules 501–511 and 517–521.
(iv) Sierra County APCD.
(A) New or amended Rules 203, 301–319, 512–516, 522, 523, 703, and 710.
(B) New or amended Rules 501–511 and 517–521.
(v) Kern County APCD.
(A) New or amended Rule 410.6.
(vi) El Dorado County APCD (Mountain Counties Air Basin Portion).
(A) Rules 318, 319, and 320.
(94) Revised regulations for the following APCD's submitted on October 7, 1980, by the Governor's designee.
(i) Stanislaus County APCD.
(A) New or amended Rule 411.1.
(ii) [Reserved]
(iii) San Bernardino County APCD.
(A) New or amended Rules 701, 704, 705, 707–711, and 712. Previously approved Rule 707, ''Plans'', submitted on June 6, 1977 is retained.
(95) Revised regulations for the following APCD's submitted on March 23, 1981, by the Governor's designee.
(i) Kern County APCD.
(A) New or amended Rule 412.1(a).
(B) Amended Rule 412.1.
(C) New or amended Rules 202, 202.1, and 426.
(ii) Ventura County APCD.
(A) Amended Rule 26.2.
(B) New or amended Rules 21, 29, 30, and 64.
(iii) Northern Sonoma County APCD.
(A) Amended Regulation 2, Rules 100, 120, 140, 200, 220, 240, 300, and 320.
(iv) South Coast AQMD.
(A) Amended Rule 461.
(v) Stanislaus County APCD.
(A) New Rule 409.7.
(B) New or amended Rule 301.
(vi) Humboldt County APCD.
(A) New or amended Rules 130, 200, 210, 220, 230, 240, 250, and 260.
(96) Revised regulations for the following APCDs submitted on November 3, 1980, by the Governor's designee.
(i) South Coast AQMD.
(A) New or amended Rule 1113.
(ii) Butte County APCD.
(A) New or amended Rules 1–8, 1–8.1, 1–10, 1–13, 1–14, 3–1, 3–2, 3–6, 3–11, 3–11.2, 3–11.3, 3–12, 3–12.1, 3–12.2, 3–14, 3–15, 3–16, and 3–16.1.
(iii) Glenn County APCD.
(A) New or amended Rules 2 (a,i,v, and aa), 3, 11, 11.1, 11.2, 13, 13.1, 14, 14.1, 14.2, 14.3, 15, 16, 19, 21, 21.1, 22, 75, 81, 83, 83.1, 83.2, 96, 110, and 112.
(iv) Yolo-Solano APCD.
(A) New or amended Rules 1.2 (a and g), 6.1 and 6.3.
(v) Bay Area AQMD.
(A) New Rule 20.
(97) Revised regulations for the following APCDs submitted on June 24, 1980, by the Governor's designee.
(i) Sacramento County APCD.
(A) New or amended Rule 18.
(98) Revised regulations for the following APCDs, submitted on January 28, 1981, by the Governor's designee.
(i) Sutter County APCD.
(A) Amended Rules 3.8, 3.14, and 3.15.
(B) New or amended Rules 1.0–1.3, 2.1–2.12, 2.15, 2.16, 3.0–3.7, 3.9, 3.10, 3.12, 3.13, 4.0–4.5, 4.7–4.10, 4.12–4.15, 5.0–5.19, 6.0–6.7, 7.0, 7.1, 7.2, 8.0, 8.1, 8.2, 9.0–9.7, and 9.8.
(C) Previously approved and now deleted Rules 2.1 (Control of Emissions), 2.7 (Wet Plumes), 2.15 (Fuel Burning Equipment), 2.20 (Payment of Order Charging Costs), 3.7 (Information), 4.5 (Standards for Granting Applications), 4.6 (Permits, Daily Limits, and 4.8 (Permit Forms).
(ii) Siskiyou County APCD.
(A) New or amended agricultural burning regulations consisting of

''General Provisions'' and Articles I–VII.

(iii) Mendocino County APCD.

(A) Amended Regulation 2, Rules 100, 120, 140, 200, 220, 240, 300, 320, Appendices A, B, and C.

(iv) Del Norte County APCD.

(A) Amended Regulation 2, Rules 100, 120, 140, 200, 220, 240, 300, 320, Appendices A, B, and C.

(v) Humboldt County APCD.

(A) Amended Regulation 2, Rules 100, 120, 140, 200, 220, 240, 300, 320, Appendices A, B, and C.

(vi) Trinity County APCD.

(A) Amended Regulation 2, Rules 100, 120, 140, 200, 220, 240, 300, 320, Appendices A, B, and C.

(vii) El Dorado County APCD.

(A) New Rule 313.

(B) Rules 313, 314, 315, 316, and 317.

(viii) Ventura County APCD.

(A) New Rule 71.2.

(ix) Bay Area AQMD.

(A) New or amended Rules 1–112, 1–113, 1–115 and Regulation 9, Rule 9–3–202.

(x) South Coast AQMD.

(A) New or amended Rule 1115.

(xi) San Diego County APCD.

(99) Commitments by the Bay Area AQMD, Fresno County APCD, Kern County APCD, Monterey Bay Unified APCD, Sacramento County APCD, San Diego County APCD, Santa Barbara County APCD, South Coast AQMD, and Ventura County APCD to carry out public notification programs as required by section 127 of the Clean Air Act and in accordance with EPA guidance. These commitments were submitted by the Air Resources Board on January 22, 1981.

(100) Revised regulations for the following APCDs submitted on October 25, 1979, by the Governor's designee.

(i) San Diego County APCD.

(A) New or amended Rules 67.3 and 67.5.

(101) Revised regulations for the following APCD's submitted on July 30, 1981 by the Governor's designee.

(i) Bay Area AQMD.

(A) Regulation 8, Rule 1 (Paragraph 202) and Rule 16 (paragraph 110).

(B) New or amended Regulation 2, Rule 2–2–114; Regulation 5, Rule 5–401.13; and Manual of Procedures—Volume I to Volume VI.

(C) New or amended Regulation 8, Rule 24.

(ii) Kern County APCD.

(A) New or amended Rules 603, 609, 610, 611, and 613.

(B) New or amended Rules 108, 201, 301, 302, and 305.

(C) New or amended Rules 414 and 410.3.

(D) New or amended Rules 410.7, 412, and 414.4.

(102) Revised rules for the following APCDs submitted on July 14, 1981 by the Governor's designee.

(i) San Joaquin County.

(A) New Rules 409.5 and 409.6.

(ii) Stanislaus County.

(A) New Rule 409.6.

(B) New or amended Rules 409.7 and 409.8.

(iii) Merced County APCD.

(A) New or amended Rules 409.6.

(iv) South Coast AQMD.

(A) New or amended Rule 301.

(103) Revised rules for the following APCDs, submitted on October 23, 1981 by the Governor's designee.

(i) Kings County.

(A) Amended Rule 412.2.

(ii) San Diego County APCD.

(A) New or amended Rule 67.4 and 67.6.

(B) New or amended Rules 42, 64, 101–103, and 109.

(C) New Rule 67.8.

(iii) Santa Barbara County APCD.

(A) Rule 325.

(B) New or amended Rules 601–608 and 609.

(C) Previously approved and now deleted Rules 609 (Scientific Committee) and 610 (Emergency Action Committee).

(iv) Ventura County APCD.

(A) Amended Rule 70(E).

(B) New or amended Rules 2, 12, 16, 23, 41, 42, and 74.2.

(C) New Rule 74.5.

(D) Amended Rule 74.9.

(v) Sacramento County APCD.

(A) Amended Rule 20.

(B) New or amended Rules 50, 70, and 14.

(C) New Rules 4A, 4B, 10 and 51.

(vi) Del Norte County APCD.

(A) Amended Rules 300 and 310.

(vii) Humboldt County APCD.

(A) Amended Rules 300 and 310.

(viii) Mendocino County APCD.

(A) Amended Rules 300 and 310.

(ix) Northern Sonoma County APCD.

(A) Amended Rules 300 and 310.

(x) Trinity County APCD.

(A) Amended Rules 300 and 310.

(xi) Great Basin Unified APCD.

(A) Amended Rule 301.

(xii) San Luis Obispo County APCD.

(A) New or amended Rules 301, 302, and 411.

(xiii) El Dorado County APCD (Mountain Counties Air Basin).

(A) New or amended Rules 301–319, 501, 703, and 710.

(xiv) Imperial County APCD.

(A) New or amended Rules 101, 301, 302, 305–307.

(xv) Shasta County APCD.

(A) Amended Rule 2:11.

(xvi) Monterey Bay Unified APCD.

(A) Amended Rules 301, 601, and 602.

(xvii) Tuolumne County APCD.

(A) New or amended Rules 203, 301–319, 501–521, 703, and 710.

(xviii) South Coast AQMD.

(A) New or amended Rules 504.1, 218, 219, 220, 409, and 502.

(104) Revised regulations for the following APCD's submitted on November 5, 1981 by the Governor's designee.

(i) Bay Area AQMD.

(A) Regulation 2, Rule 1: 2–1–101, 2–1–102, 2–1–111, 2–1–112, 2–1–201 to 2–1–205, 2–1–301 to 2–1–306, 2–1–401 to 2–1–410, and 2–1–420 to 2–1–423; Rule 2: 2–2–101 to 2–2–114, 2–2–201 to 2–2–208, 2–2–301 to 2–2–306, 2–2–310, and 2–2–401 to 2–2–410.

(ii) South Coast AQMD.

(A) New or amended Rule 444.

(iii) Fresno County APCD.

(A) New or amended Rule 409.6.

(105) Schedule to study Nontraditional Total Suspended Particulate Sources and commitment to implement control measures necessary to provide for attainment, submitted on November 18, 1981 by the Governor's designee.

(106) The *Southeast Desert Air Basin Control Strategy* for ozone (Chapter 19 of the Comprehensive Revisions to the State of California Implementation Plan for the Attainment and Maintenance of the Ambient Air Quality Standards) was submitted by the Governor's designee on February 15, 1980. The portions of the *Southeast Desert Air Basin Control Strategy* identified in Table 19–1 (Summary of Plan Compliance with Clean Air Act Requirements), except those which pertain to Imperial County, comprise the plan. The remaining portions are for informational purposes only.

(107) On August 11, 1980, the Governor's designee submitted a revision to the State Implementation Plan which adds the Southeast Desert Air Basin portion of Riverside County into the South Coast Air Quality Management District.

(108) On November 28, 1980, the Governor's designee submitted a revision to the State Implementation Plan which deletes Rule 67, for the San Bernardino County APCD as applied to new sources.

(109) Three items submitted for Fresno County and the Sacramento Metropolitan Area by the Governor's designee on October 9, 1980:

(i) *Air Quality Planning Addendum-Council of Fresno County Governments 1979–84 Overall Work Program.*

(ii) *Emission Inventory, 1976* for the Sacramento Metropolitan Area.

(iii) *Air Quality Plan Technical Appendix, January 1979* for the Sacramento Metropolitan Area.

(110) Five items submitted for Ventura County by the Governor's designee on April 1, 1980:

(i) *Appendix B–81, Empirical Kinetic Modeling Approach*: Ozone Formation, Transport, and Concentration Relationships in Ventura County; Update of Emission Reduction Required for Attainment of Ozone NAAQS.

(ii) *Letter*: Jan Bush to Mike Redemer, January 23, 1981.

(iii) *Letter and enclosures*: Janet Lyders to Mike Scheible, February 6, 1981.

(iv) *Letter and enclosures*: Jan Bush to William Lockett, December 15, 1980.

(v) *Letter and enclosures*: Jan Bush to William Lockett, October 23, 1980.

(111) Four items submitted for Ventura County by the Governor's designee on July 16, 1981:

(i) Attachment V—Transportation Control Measures.

(ii) Ventura Air Quality Management Plan, Appendix O, *Plan for Attainment of Standards for Total Suspended Particulates In Ventura County: Interim Report,* July, 1980.

(iii) Attachment IV—Population Forecasts.

(iv) Attachment VI—Implementation of Emission Reductions Required for Attainment of TSP Standards.

(112) Plan for Attainment of the Federal Secondary Total Suspended Particulate Standard in Santa Clara County, an addendum to the San Francisco Bay Area Air Basin Control Strategy (Chapter 15) submitted on March 16, 1981, by the Governor's designee.

(113) Supplemental material for the San Diego Nonattainment Area Plan submitted on July 13, 1981, by the Governor's designee.

(114) Supplemental material for the San Diego Nonattainment Area Plan submitted on August 31, 1981, by the Governor's designee.

(115) Supplemental material for the San Diego Nonattainment Area Plan submitted on December 8, 1981, by the Governor's designee.

(116) Supplemental material for the South Coast Nonattainment Area Plan submitted on July 24, 1981, by the Governor's designee.

(117) Supplemental material for the South Coast Nonattainment Area Plan submitted on December 24, 1981, by the Governor's designee.

(118) Supplemental material for the South Coast Nonattainment Area Plan submitted on February 18, 1982, by the Governor's designee.

(119) Revised regulations for the following APCDs submitted on April 17, 1980, by the Governor's designee.

(i) El Dorado County APCD (Mountain Counties Air Basin).

(A) New or amended Rules 502–520.

(B) Rule 102.

(ii) Mendocino County APCD.

(A) New or amended Rules 130, 200, 210, 220, 230, 240, 250, and 260.

(120) *The Mountain Counties Air Basin Control Strategy* for ozone (Chapter 9 of the ''Comprehensive Revisions to the State of California Implementation Plan for the Attainment and Maintenance of the Ambient Air Quality Standards'' was submitted by the Governor's designee on April 3, 1981. The submittal also included revised regulations for the following APCD's.

(i) El Dorado County APCD (Mountain Counties Air Basin portion).

(A) Rules 401, 402, 403, 404, 405, 406, 407, 410, 411, 415, 416, 418, 419, 420, 421, 422, 423, 424, and 425.

(121) Revised regulations for the following APCDs submitted on March 1, 1982 by the Governor's designee.

(i) South Coast AQMD.

(A) New or amended Rule 474.

(B) Amended Rules 107, 1107, 1108.1, 1125 and 1126.

(C) Amended Rule 1110.

(ii) San Diego County APCD.

(A) New or amended Rules 62 and 53.

(B) Amended Rule 67.6(e).

(iii) Lake County APCD.

(A) New or amended Rule 655.

(iv) Bay Area AQMD.

(A) Amended Regulation 8, Rules 2–112 and 5–313.4.

(v) Ventura County APCD.

(A) Amended Rule 74.6.

(122) [Reserved]

(123) Supplemental material for the Kern County Nonattainment Area Plan submitted on March 4, 1982, by the Governor's designee.

(124) Revised regulations for the following APCDs submitted on August 6, 1982, by the Governor's designee.

(i) Bay Area AQMD.

(A) New or amended Regulation 1: Rules 1–100, 1–112, 1–205, 1–233, 1–234, 1–235, 1–520, 1–522, 1–530, 1–540, 1–543, 1–544, and 1–602; Regulations 4: Rule 4–303; Regulation 5: Rules 5–208 and 5–402; and deletion of Regulation 6: Rule 6–132.

(B) [Reserved]

(C) Amended Regulation 8, Rules 2, 4, 5, 8 and 10.

(D) New or amended Regulation 2: Rules 2–1–207, 2–1–208, 2–1–301, 2–1–304, and 2–1–307.

(E) Amended Regulation 8, Rule 23.

(ii) Lake County APCD.

(A) New or amended Rules 630, 631, 660.1, 660.2, and 660.3.

(iii) San Joaquin County APCD.

(A) New or amended Rules 203, 415, 503, and 521.

(iv) South Coast AQMD.

(A) New or amended Rule 407.

(B) Amended Rule 1107.

(C) [Reserved]

(v) Stanislaus County APCD.

(A) New or amended Rules 203 and 503.

(B) New or amended Rules 409.4 and 409.8.

(vi) Del Norte County APCD.

(A) New or amended Rules 616, 618, and 620.
(B) New or amended Rule 230, adopted December 14, 1981.
(vii) Humboldt County APCD.
(A) New or amended Rules 616, 618, and 620.
(B) New or amended Rule 230, adopted December 8, 1981.
(viii) Mendocino County APCD.
(A) New or amended Rules 610, 616, 618, and 620.
(B) New or amended Rules 130 (introductory text, b1, m1, p5, and s2), and 230, adopted January 5, 1982.
(ix) Northern Sonoma County APCD.
(A) New or amended Rules 616, 618, and 620.
(B) New or amended Rules 130 (introductory text, b1, n1, p5, and s2), 220(c), 230, and 260, adopted February 23, 1982 and rule 200, adopted June 15, 1982.
(x) Trinity County APCD.
(A) New or amended Rules 616, 618, and 620.
(B) New or amended Rule 230, adopted December 7, 1981.
(xi) Kern County APCD.
(A) New or amended Rule 411.
(xii) Butte County APCD.
(A) New or amended Rules 4–6 and 4–6A.
(125) Revised Regulations for the following APCDs submitted on May 20, 1982 by the Governor's designee.
(i) San Diego County APCD.
(A) New or amended Rule 40.
(ii) South Coast AQMD.
(A) New or amended Rule 431.1.
(B) New or amended Rules 303 and 304.
(C) [Reserved]
(D) Amended Rules 442, 467 and 1128.
(iii) Monterey Bay Unified APCD.
(A) New or amended Rule 422.
(B) New Rule 428.
(iv) Shasta County APCD.
(A) New or amended Rules 2:6, 2:7, 2:8, 2:9, 2:11 and 4:4.
(v) Tulare County APCD.
(A) New or amended Rules 104 and 405.
(B) Amended Rule 410.1.
(vi) Yolo-Solano APCD.
(A) New or amended Rules 4.1 and 4.2.
(vii) Yuba County APCD.
(A) New or amended Rule 9.6.
(viii) Bay Area AQMD.
(A) Manual of Procedures: Volumes I, V and VI.
(B) Amended Regulation 8, Rules 7, 14, 18 and 19.
(ix) San Joaquin County APCD.
(A) Amended Rule 412.
(126) Revised regulations for the following APCDs submitted on November 8, 1982 by the Governor's designee.
(i) Sacramento County APCD.
(A) New or amended Rules 59 and 70.
(B) Amended Rules 16 and 19.
(ii) Santa Barbara County APCD.
(A) New or amended Rule 210D.
(iii) Stanislaus County APCD.
(A) New or amended Rules 110, 202, and 302.
(B) Amended Rules 409.8, 411 and 411.1(G).
(iv) South Coast AQMD.
(A) New or amended Rules 708.3 and 1105.
(v) Tulare County APCD.
(A) New or amended Rule 519.
(B) Amended Rules 410.3 and 410.4.
(vi) Yolo-Solano County APCD.
(A) New or amended Rule 6.1.
(B) Amended Rule 2.22.
(127)(i)(A) [Reserved]
(B) Amended Regulation 3: Rules 3–102, 3–302, 3–302.1, 3–303, and Schedule A.
(C) Amended Rules 13 and 29.
(D) New or amended Regulation 2: Rules 2–2–113.2, 2–2–115, 2–2–209, 2–2–210, 2–2–211, 2–2–303.2, 2–2–304.1, 2–2–304.2, and 2–2–404; and Regulation 3: Rule 3–312.
(ii) Fresno County APCD.
(A) Amended Rules 406 and 408.
(B) Amended Rule 409.1.
(iii) North Coast Unified AQMD.
(A) New Rule 350.
(iv) Imperial County APCD.
(A) Amended Rule 409.
(B) Amended Rule 424.
(v) Monterey Bay Unified APCD.
(A) New or amended Rule 601.
(B) Amended Rule 301, submitted on February 3, 1983.
(vi) San Luis Obispo County APCD.
(A) Amended Rule 302.
(vii) South Coast AQMD.
(A) New or amended Rules 301.1, 302, 303, and Resolutions 82–23 and 82.35.
(B) New or amended Rules 461, 1102, and 1102.1.
(C) New or amended Rules 301, 304, 401(b) and 1148.
(viii) Ventura County APCD.
(A) New or amended Rule 41.
(B) Amended Rule 74.2.

(128) The 1982 Ozone Air Quality Plan for the Monterey Bay Region was submitted on December 31, 1982 and January 14, 1983 by the Governor's designee.

(129) The 1982 Ozone Air Quality Plan for Stanislaus County and the 1982 Ozone and CO plan for San Joaquin County were submitted on December 1, 1982 by the Governor's designee.

(130) The 1982 Ozone Air Quality Plan for Santa Barbara County was submitted on December 31, 1982 by the Governor's designee.

(131) [Reserved]

(132) Revised regulations for the following APCDs submitted on June 28, 1982, by the Governor's designee.

(i) Kern County APCD.

(A) Amended Rule 425.

(133) The enabling legislation, Chapter 892, Statutes of 1982, (Senate Bill No. 33) for a California motor vehicle inspection and maintenance program and the California Air Resources Board's Executive Order G–125–15 submitted on September 17, 1982 by the Governor's designee.

(134) A schedule to implement the California motor vehicle inspection and maintenance (I/M) program, the California Air Resources Board's Executive Order G–125–33, and local resolutions and requests from the Bay Area Air Quality Management District, Sacramento County APCD, Placer County APCD, Yolo-Solano APCD, San Diego County APCD, South Coast Air Quality Management District and Ventura County APCD to have the State implement the I/M program, submitted on July 26, 1983 by the Governor's designee.

(135) The 1982 Ozone and CO Air Quality Plan for the San Francisco Bay Air Basin was submitted on February 4, 1983 by the Governor's designee.

(136) The 1982 Ozone and CO Air Quality Plan for the San Diego Air Basin was submitted on February 28 and August 12, 1983 by the Governor's designee.

(137) Revised regulations for the following APCDs was submitted on July 19, 1983 by the Governor's designee.

(i) Kern County APCD.

(A) New or amended Rules 301.1 and 302.

(B) Amended Rule 410.1

(ii) Merced County APCD.

(A) New or amended Rules 104, 108, 113, 202, 209.1, 301, 305, 407 and 519.

(B) Amended Rule 409.1.

(C) New or amended Rules 409.4, 409.5, 411 and 411.1.

(iii) Sacramento County APCD.

(A) New or amended Rule 7.

(B) Amended Rule 17.

(iv) San Diego County APCD.

(A) New or amended Rules 10 and 40.

(B) Amended Rules 67.3, 67.4 and 67.6.

(v) San Luis Obispo County APCD.

(A) New or amended Rule 212.

(vi) Shasta County APCD.

(A) New or amended Rules 2.18, 3.4, and 3.15.

(B) Amended Rules 3.3(b), 3.4(d) and 3.15(c).

(vii) South Coast AQMD.

(A) New or amended Rules 502, 1207 and deletion of 301.1.

(B) New or amended Rules 301, 301.1, 301.2 and 431.1.

(viii) Ventura County APCD.

(A) Amended Rule 41.

(ix) Monterey Bay Unified APCD.

(A) Amended Rule 426.

(x) Placer County APCD (Mountain Counties Air Basin portion).

(A) Amended Rule 218.

(xi) Fresno County APCD.

(A) Amended Rule 409.4.

(138) Revised regulations for the following APCDs was submitted on April 11, 1983 by the Governor's designee.

(i) Butte County APCD.

(A) Amended Rules 1–36, 4–2, 4–3, 4–11, and 5–3.

(ii) El Dorado County APCD.

(A) New or amended Rules 203, 206, 207, 209–212, 221–226, 521, 609–612 and 700–703.

(B) Amended Rules 214–220.

(C) New Rule 213.

(iii) Fresno County APCD.

(A) New or amended Rule 301.

(iv) Lake County APCD.

(A) New or amended Rules 900 and 902.

(v) Madera County APCD.

(A) New or amended Rules 103–117, 301–305, 401–405, 421–425, 501–503, 519, 606, 610 and 611.

(B) Amended Rules 409, 410, and 417–419.

(C) New or amended Rules 406, 407, 408, 411 and 420.

(vi) Monterey Bay Unified APCD.

(A) New or amended Rules 200, 201(p), 501, 503, 506, 507 and 508.

(B) Amended Rule 425.

(vii) Ventura County APCD.

(A) New or amended Rule 59c.

(viii) Kern County APCD.

(A) Amended Rule 414.1.

(ix) Kings County APCD.

(A) Amended Rule 410.1.

(139) Amendments to ''Chapter 27—California Lead Control Strategy'' was submitted on April 8, 1983 by the Governor's designee.

(140) Revised regulations for the following APCDs were submitted on August 30, 1983 by the Governor's designee.

(i) Bay Area AQMD.

(A) Amended Regulation 3: Rules 3–100 through 3–103, 3–200 through 3–211, 3–300 through 3–313 and 3–400 through 3–409.

(B) New Regulation 8, Rule 30.

(ii) Kern County APCD.

(A) New or amended Rules 405, 408, 409, and 424.

(iii) Stanislaus County APCD.

(A) New or amended Rules 109 and 213.

(B) Amended Rule 409.1.

(iv) Yolo-Solano APCD.

(A) Amended Rule 2.13(1).

(141) The 1982 CO Air Quality Plan for the Lake Tahoe Air Basin was submitted on December 20, 1982 by the Governor's designee.

(142) The 1982 ozone and CO Air Quality Plan for the Sacramento nonattainment area submitted on January 10, 1984 by the Governor's designee, except for the attainment and RFP demonstration portions of the ozone plan.

(143) Revisions to the 1982 ozone and CO Air Quality Plan for the Sacramento nonattainment area submitted on February 10, 1984.

(144) The 1982 Ozone and CO Air Quality Management Plan for the South Coast Air Basin submitted on December 31, 1982 and subsequently amended on February 15, and June 28, 1984 by the Governor's designee, except for:

(i) The attainment and RFP demonstration portions of the plan.

(ii) The emission reduction credit for the New Source Review control measure.

(145) The 1982 Ozone Air Quality Management Plan for Ventura County submitted on December 31, 1982 by the Governor's designee except for the attainment and RFP demonstration portions of the plan.

(146) The 1982 Ozone and CO Clean Air Plan for the Fresno nonattainment area submitted on December 1, 1982 by the Governor's designee, except for the attainment and RFP demonstration portions of the plans.

(147) [Reserved]

(148) Revised regulations for the following APCDs were submitted on October 27, 1983 by the Governor's designee.

(i) Bay Area AQMD.

(A) New or amended Regulations 6–303.4, 9–1–100, 9–1–101, 9–1–110, 9–1–200 through 9–1–205, 9–1–300 through 9–1–312, 9–1–400 through 9–1–404, 9–1–500 through 9–1–503, 9–1–600 through 9–1–605 and 5–401.13.

(B) Amended Regulation 8, Rules 3, 9, 10, 20, 22, 25 and 28.

(ii) El Dorado County APCD.

(A) New or amended Rules 102, 226, 227, and 228.

(B) New Rules 224 and 225.

(iii) Monterey Bay Unified APCD.

(A) New or amended Rules 407, 410, and 411.

(iv) San Diego County APCD.

(A) New or amended Rule 68.

(B) New Rule 67.9.

(v) Shasta County APCD.

(A) New or amended Rule 2.6.

(vi) South Coast AQMD.

(A) New or amended Rules 1105 and 1111.

(B) New or amended Rules 1113, 1122, 1136, 1141 and 1145.

(vii) Ventura County APCD.

(A) New or amended Rule 30.

(viii) Madera County APCD.

(A) Amended Rule 416.

(149) Revised regulations for the following APCD's submitted on January 20, 1983 by the Governor's designee.

(i) California State.

(A) New or amended California statewide regulations: Test Procedures for Determining the Efficiency of Gasoline Vapor Recovery Systems at Service Stations; Certification and Test Procedures for Vapor Recovery Systems of Gasoline Delivery Tanks; Test Procedure for Gasoline Vapor Leak Detection Using Combustible Gas Detector.

(150) Revised regulations for the following APCD's submitted August 2, 1983, by the Governor's designee.

(i) Kings County APCD.

(A) New Rule 414.4.

(ii) Yuba County APCD.

(A) Amended Rule 3.9.

(151) [Reserved]

(152) Amendments to ''Chapter 27—California Lead Control Strategy'' were submitted on February 22, 1984 by the Governor's designee.

(153) Revised regulations for the following APCD's were submitted on March 14, 1984 by the Governor's designee.

(i) Lake County APCD.

(A) New or amended Rule 602.

(ii) North Coast Unified AQMD.

(A) New or amended Rules 100, 120, 130 [Paragraphs (d1) and (s5)], 160 (except (a) and non-criteria pollutants), 240, 500, 520, 600, 610 and Appendix B (except (D)(1)(e)).

(B) New or amended Rules, 130, 130 (b1, m2, n1, p5, s2), 200 (a), (b), (c)(1–2), and (d), 220(c), and 260.

(iii) San Diego APCD.

(A) New or amended Rules 2, 52 and 53.

(B) Amended Rules 67.0 and 67.1 (deletion).

(iv) San Joaquin APCD.

(A) New or amended Rules 110, 202 and 407.

(B) Amended Rules 409.1 and 409.4.

(v) Bay Area AQMD.

(A) New Regulation 8, Rules 31 and 32.

(vi) Kern County APCD.

(A) Amended Rule 410.1.

(vii) South Coast AQMD.

(A) New or amended Rules 1108.1 and 1141.1.

(B) New Rule 1158, adopted 12–2–83.

(viii) Ventura County APCD.

(A) Amended Rule 74.2

(154) Revised regulations for the following APCD's were submitted on April 19, 1984 by the Governor's designee.

(i) Mendocino County APCD.

(A) New or amended Regulation 1: Rules 100, 120, 130 [Paragraphs (d1) and (s5)], 160 (except (a) and non-criteria pollutants), 240, 500, 520, 600, 610 and Appendix B (except (D)(1)(e)) and Regulation 2: Rules 101, 102, 200, 301, 302, 303, 304, 305, 401, 501, and 502.

(B) New or amended Rules, 130, 200, 220(a)(1&3), (b)(1, 2, 5, and 7), (c), and 260.

(ii) Monterey Bay Unified APCD.

(A) New or amended Rules 101, 200, 203 and 422.

(B) Amended Rule 426.

(iii) Sacramento County APCD.

(A) New or amended Rules 101, 102, 103, 403–410, 420, 501, 601, 602 and 701.

(B) Amended Rules 441, 442, 444–446 and 448–455.

(iv) San Luis Obispo County APCD.

(A) New or amended Rule 105.

(v) Shasta County APCD.

(A) New or amended Rules 1:2, 2:2 (repealed), 2:3 (repealed), 2:6 2:26 (repealed), 2:27 (repealed), and 3:2.

(B) Amended Rule 3:4, adopted on January 3, 1984.

(vi) Bay Area AQMD.

(A) New or amended Regulation 8, Rules 6, 7, 29 and 33.

(B) Amended Regulation 9, Rule 4 adopted December 7, 1983.

(vii) South Coast AQMD.

(A) Amended Rule 1124.

(B) [Reserved]

(155) Revised regulations for the following APCD's submitted July 10, 1984, by the Governor's designee.

(i) Bay Area AQMD.

(A) New or amended Regulation 8, Rules 11, 34 and 35.

(ii) El Dorado County APCD.

(A) New or amended Rules 215, 216 (deletion), 216 and 217 (deletion).

(B) New or amended Rule 217.

(iii) Madera County APCD.

(A) New or amended Rules 409 and 410.

(B) New or amended Rules 203 and 404.

(iv) South Coast AQMD.

(A) Amended Rule 1113.

(B) New or amended Rules 401 and 1305.

(v) North Coast Unified AQMD.

(A) New or amended Regulation 2.

(B) New or amended Rules 130 (b2, m1, p3, and s7), Chapter II, 200 (c)(3–6) and 220 (a) and (b).

(vi) Shasta County APCD.

(A) Amended Rule 1:2.

(156) Revised regulations for the following APCD's were submitted on October 19, 1984 by the Governor's designee.

(i) Bay Area AQMD.

(A) New or amended Rules 2–1 and 8–36.

(ii) Merced County APCD.

(A) New or amended Rules 112, 409.1, and 409.4.

(iii) North Coast Unified AQMD.

(A) New or amended Rules 160 and 460.

(B) Amended Rules 130(c, 1) and 240(e).

(iv) San Diego County APCD.

(A) New or amended Rules 61.0, 61.2, 61.8, and 67.3.

(v) Yolo-Solano APCD.

(A) New or amended Rule 2.21.

(vi) Northern Sonoma County APCD.

(A) New or amended Rules 130 (b2, m1, p3, p3a, and s7), Chapter II, 220(B).

(vii) South Coast AQMD.

(A) New or amended Rule 463, adopted 6–1–84 and 1141.2, adopted 7–6–84.

(157) [Reserved]

(158) Revised regulations for the following Districts were submitted on December 3, 1984 by the Governor's designee.

(i) Mendocino County APCD.

(A) New or amended Rules 1–160, 1–240, 1–460 and 2–502.2.

(B) New or amended Rules 130 (b2, m1, p3, s7), Chapter II, 220 (a)(2) and (b)(3, 4, 6, 8 and 9).

(159) Revised regulations for the following APCD's were submitted on February 6, 1985 by the Governor's designee.

(i) Sacramento County APCD.

(A) Amended Rule 202 (except for a) sections 104 and 105 as they apply to volatile organic compounds and nitrogen oxides, b) sections 109 and 229, and c) the portion of section 405 which concerns stack heights [under NSR]).

(ii) Fresno County APCD.

(A) New or amended Rules 409.7 and 413.1, adopted on October 2, 1984.

(iii) Monterey Bay Unified APCD.

(A) New or amended Rules 100 to 106, 200 to 206, 208 to 214, 400, 401, 405, 406, 408 to 415, 417 to 422, 425 to 428, 500 to 506, 600 to 617, 700 to 713, 800 to 816, and 900 to 904, adopted on December 13, 1984.

(iv) Sacramento County APCD.

(A) New or amended Rules 201 (sections 100–400), 404 (sections 100–300), and 443 (sections 100–400), adopted on November 20, 1984.

(B) Amended Rule 447 adopted November 20, 1984.

(v) South Coast AQMD.

(A) New or amended Rules 1104 and 1125, adopted on December 7, 1984.

(B) Amended Rule 1141, adopted on November 2, 1984.

(C) Amended Rule 1105 adopted September 21, 1984.

(D) New Rule 1117 adopted January 6, 1984.

(vi) Stanislaus County APCD.

(A) New or amended Rules 202(O), 411, and 416.1, adopted on September 18, 1984.

(vii) Yolo-Solano County APCD.

(A) Amended Rule 2.21.a.7. (a) and (b) adopted November 21, 1984.

(160) Revised regulations for the following APCD's were submitted on April 12, 1985, by the Governor's designee.

(i) Incorporation by reference.

(A) Bay Area AQMD.

(*1*) Revisions to Regulation 8, Rule 33, adopted on January 9, 1985.

(B) San Luis Obispo County APCD.

(*1*) New or amended Rules 201, 205, 405, and 406, adopted on November 13, 1984.

(C) Shasta County APCD.

(*1*) Amended Rule 2:1.514, adopted on May 29, 1984.

(D) San Diego County APCD.

(*1*) New Rule 67.10 adopted January 30, 1985.

(E) South Coast AQMD.

(*1*) Amended Rule 1108 adopted February 1, 1985.

(161) Revisions to the ozone and carbon monoxide nonattainment area plans for the Fresno County portion of the San Joaquin Valley Air Basin were submitted by the Governor on June 11, 1984.

(i) Incorporation by reference.

(A) State of California Air Resources Board Executive Order G–125–46 adopted May 11, 1984.

(B) Letters from the County of Fresno to the Bureau of Automotive Repair dated March 14, 1984 and February 14, 1984 requesting implementation of an I/M program in Fresno County.

(C) County of Fresno Resolution File Number 18–13 adopted February 14, 1984.

(D) Schedule to implement I/M in Fresno County, adopted on February 14, 1984.

(ii) Additional Information. The State submitted no additional information.

(162) Revised regulations for the following APCD were submitted on June 21, 1985 by the Governor's designee.

(i) Northern Sonoma County APCD.

(A) Amended Rule 220 (a).

(163) Rule 1304(e), Resource Conservation and Energy Projects, adopted on March 7, 1980, submitted on April 3, 1980 (See §52.220(c)(68)(i)), and conditionally approved on January 21, 1981 [See §52.232(a)(3)(i)(A)] is disapproved but only with respect to projects whose application for a permit is complete after January 1, 1986.

(164) Revised regulations for the following APCD's were submitted on October 16, 1985 by the Governor's designee.

(i) Incorporation by reference.

(A) Amador County APCD.

(*1*) New or amended Rules 301–319 and 501, adopted 6/16/81; and Rules 502–514 and 517–521, adopted 1/8/80.

(B) Northern Sonoma County APCD.

(*1*) Amended Rules 100, 120, 130 (d1 and s5), 500, 520, 600, and 610, adopted 2/22/84, and amended Rule 200(a), adopted 7/19/83.

(C) Ventura County APCD.

(*1*) Amended Rules 15, 54, 61, 64, 67, 69, 70, 74.3, 74.4, 74.5, 74.6, 74.8, 80, and 103, revised 7/5/83.

(*2*) Previously approved and now removed (without replacement), Rule 84.

(D) Yuba County APCD.

(*1*) Amended Rules 1.1, 2.0, 2.1, 2.3, 2.5, 2.6, 2.7, 2.9, 2.11, and 2.16, adopted 3/5/85.

(165) Revised regulations for the following APCD's were submitted by the Governor's designee on November 12, 1985.

(i) Incorporation by reference.

(A) Northern Sonoma County APCD.

(*1*) Amended Rule 130 s4, adopted 7/9/85.

(B) South Coast Air Quality Management District.

(*1*) Amended Rule 221, adopted 1/4/85.

(166) A revised regulation for the following district was submitted on December 2, 1983, by the Governor's designee.

(i) Incorporation by reference.

(A) South Coast AQMD.

(1) Amended Rule 466 adopted 10/7/83.

(167) A revised regulation for the following district was submitted on August 1, 1984, by the Governor's designee.

(i) Incorporation by reference.

(A) Ventura County APCD.

(1) Amended Rule 74.7 adopted 7–3–84.

(168) Revised regulations for the following APCD's were submitted by the Governor's designee on February 10, 1986.

(i) Incorporation by reference.

(A) Butte County APCD.

(*1*) New or amended Rules 101, 102, 250, 260, 261, 270, 301, 302, 303, 304, 306, 307, 308, 309, 310, 311, 312, 313, 314, 315, 316, 317, 318, 320, 322, 323, 324, 325, 401, 402, 403, 405, 406, 407, 420, 421, 422, 423, 425, 601, 602, 603, 604, 605, 606, 607, 608, 609, 610, 611, 612, 613, 614, 615, 616, 617, 618, 619, 620, 621, 701, 702, 703, 704, 801, 802, 901, 902, and 3–3 (repealed), adopted August 6, 1985.

(*2*) New or amended Rules 202, 203, 204, 205, 210, 211, 212, 213, 214, 215, 220, 225, and 231 adopted August 6, 1985.

(B) Lake County APCD.

(*1*) New Rules 650D, 651, and 1701Q, adopted December 10, 1985.

(C) Placer County APCD (Mountain Counties portion).

(*1*) Amended Rules 102, 312, 314, 315, 320, 505, 507, 803, 211A (repealed), and 219M (repealed), adopted May 20, 1985.

(*2*) New or amended Rules 213, 307, and 324 adopted May 20, 1985.

(D) Sutter County APCD.

(*1*) Amended Rule 2.5, adopted October 15, 1985.

(E) Tehama County APCD.

(*1*) Amended Rules 2.12, 2.13, 2.14, 2.15, 2.16, 2.17, 5.2, 5.3, 5.6, 5.7, 5.8, 5.9, 5.10, 5.11, 5.12, 5.13, 5.15, 5.16, 5.17, 5.18, 5.20, 5.21, 5.22, and 5.23, adopted September 19, 1985.

(*2*) New or amended Rules 4.3, 4.8, 4.9 (a) and (b), 4.10, and 4.14 adopted September 10, 1985.

(F) Monterey Bay Unified APCD.

(*1*) New or amended Rules 416 and 418 adopted September 18, 1985.

(G) San Diego County APCD.

(*1*) New or amended Rules 66 (w) and 67.8 (d) adopted September 17, 1985.

(H) South Coast AQMD.

(*1*) Amended Rule 1159 adopted December 6, 1985.

(169) [Reserved]

(170) Revised regulations for the following APCD's were submitted on August 12, 1986, by the Governor's designee.

(i) Incorporation by reference.

(A) Placer County Air Pollution Control District.

(*1*) Amended rules 101, 201, 305 (Mountain Counties portion), adopted May 27, 1986.

(171) Revised regulations for the following APCD's were submitted on November 21, 1986 by the Governor's designee.

(i) Incorporation by reference.

(A) Mendocino County APCD.

(*1*) Amended Rule 200(d), adopted on July 8, 1986.

(B) Placer County APCD.

(*1*) New Rule 225, adopted on June 17, 1986.

(C) San Joaquin County APCD.

(*1*) Amended Rules 411.2, 416, and 416.1, adopted on June 24, 1986.

(D) Shasta County APCD.

(*1*) New or amended Rules 1:1, 1:2 (except ''fugitive emissions''), 2:10, 2:23, 2:26, 2:27, 3:2, 3:3, 4:1, 4:2, and 4:7 adopted on July 22, 1986.

(*2*) Previously submitted to EPA on June 30, 1972 and approved in the FEDERAL REGISTER on September 22, 1972 and now removed without replacement, Rule 2:13.

(*3*) Previously submitted to EPA on July 19, 1974 and approved in the FEDERAL REGISTER on August 22, 1977 and now removed without replacement, Rules 3:8, 4:7, 4:9, 4:10, 4:11, 4:12, 4:13, 4:15, 4:16, 4:17, 4:18, 4:20, 4:21, and 4:22.

(*4*) Previously submitted to EPA on October 13, 1977 and approved in the FEDERAL REGISTER on November 14, 1978 and now removed without replacement, Rules 4:14 and 4:19.

(172) Revised regulations for the following APCD's were submitted on March 11, 1987, by the Governor's designee.

(i) Incorporation by reference.

(A) Siskiyou County APCD.

(*1*) New or amended Rules 1.1, 1.2 (A3, A4, A8, A9, B3, B4, C1, C5, C6, C8, C10, D1, D2, E1, F1, H2, I2, I3, M3, M4, O1, P1, P3, P4, P8, R3, R4, R6, S1, S2, S3, S5, S6, T2, V1), 1.3, 1.5, 2.3, 2.7, 2.8, 2.9, 2.10, 2.11, and 2.12 adopted on November 25, 1986.

(*2*) Previously submitted to EPA on February 21, 1972 and approved in the FEDERAL REGISTER on May 31, 1972 and now removed without replacement, Rule 1.2 (M).

(*3*) Previously submitted to EPA on July 25, 1973 and approved in the FEDERAL REGISTER on August 22, 1977 and now removed without replacement, Rule 2.13.

(B) Ventura County APCD.

(*1*) Amended Rule 23, adopted on October 21, 1986.

(173) Revised regulations for the following APCD's were submitted on June 9, 1987 by the Governor's designee.

(i) Incorporation by reference.

(A) Bay Area AQMD.

(*1*) New Rules 2–1–401.6 and 2–1–401.7, adopted January 7, 1987.

(B) Imperial County APCD.

(*1*) New or amended Rules 102, 105, 108, 110, 113, 115, 203, 204, 205, 210, 401, 402, 403, 420, 421, 422, and 423, adopted November 19, 1985.

(C) Monterey Bay Unified APCD.

(*1*) Amended Rule 201 (introductory paragraph and subparagraphs (1) through (8.6)), adopted December 17, 1986.

(D) Tulare County APCD.

(*1*) Amended Rules 110 and 202 (introductory paragraph and subparagraphs (a) through (d.7)), adopted May 13, 1986.

(174) Revised regulations for the following APCD's were submitted on September 1, 1987 by the Governor's designee.

(i) Incorporation by reference.

(A) South Coast AQMD.

(*1*) Amended Rule 212, adopted May 1, 1987.

(B) Ventura County APCD.

(*1*) Amended Rule 12, adopted June 16, 1987.

(175) Revised regulations for the following APCD's were submitted on November 25, 1987, by the Governor's designee.

(i) Incorporation by Reference.

(A) Shasta County AQMD.

(*1*) Amended rules 1:2, 2:6.a.4.(c), 2:6.b, 2:7.a, 2:7.c, 2:8.c.2.(a), 2:8.c.3.(a), 2:8.c.4, and 2:19, adopted on July 28, 1987.

(B) Tehama County APCD.

(*1*) New or amended rules 1:2, 3:1, 3:6(1), 3:11(a), 3:12, 3:13.j, 3:14(10), 3:15, 4:3, and 4:24, adopted on August 4, 1987.

(C) Yolo-Solano APCD.

(*1*) Amended rule 3:7(d), adopted on August 12, 1987.

(176) Revised regulations for the following APCD's were submitted on March 23, 1988 by the Governor's designee.

(i) Incorporation by reference.

(A) Siskiyou County Air Pollution Control District.

(*1*) New and amended rules 4.1, 4.1–1, 4.1–2, 4.2–1, 4.3, 4.4, 4.5, 4.6, 4.6–1, 4.7, 4.8, 4.9, 4.10, 4.11, 7.1, 7.2, 7.3, 7.4, 7.5–1, 7.5–2, 7.5–3, 7.6, and 7.7 adopted on October 27, 1987.

(B) Lake County Air Pollution Control District.

(*1*) Amended rules 431.5, 431.7, 432, 432.5, 433, 434, 436.5, 442, 1105, and 1107 adopted October 20, 1987.

(C) Lassen County Air Pollution Control District.

(*1*) Amended Articles I, II, III, IV, V, VI, and VII adopted August 11, 1987.

(177) Revised regulations for the following APCD's were submitted by the Governor's designee on February 7, 1989.

(i) Incorporation by reference.

(A) Ventura County Air Pollution Control District.

(*1*) Amended Rules 2 and 55 adopted May 24, 1988.

(*2*) Amended Rule 56 adopted May 24, 1988.

(B) Bay Area Air Quality Management District.

(*1*) Amended Regulation 4 adopted September 7, 1988.

(C) Mariposa County Air Pollution Control District.

(*1*) Amended Regulation III and Rules 300, 301, 302, 303, 304, 305, 306, 307, and 308 adopted July 19, 1988.

(D) Madera County Air Pollution Control District.

(*1*) Amended rules 106, 112, 114, 401, 403, 422, 424, 425, 501, 504, 505, 506, 518, 519, 601, 603, 605, 606, 609, 610, 611, 613, and 614 adoped on January 5, 1988.

(E) Bay Area Air Quality Management District.

(*1*) Rule 8–5 adopted on May 4, 1988.

(178) [Reserved]

(179) Revised regulations for the following APCD's were submitted on March 26, 1990, by the Governor's designee.

(i) Incorporation by reference.

(A) Kings County Air Pollution Control District.

(*1*) Amended Rules 417 and 417.1 adopted on February 28, 1989.

(B) San Bernardino County Air Pollution District.

(*1*) Amended Rules 101, 102 (except fugitive liquid leak and fugitive vapor leak), 103, 104, 105, and 106 adopted on December 19, 1988.

(C) Bay Area Air Quality Management District.

(*1*) Rule 8–44, adopted January 4, 1989.

(D) Ventura County Air Pollution Control District.

(*1*) Rule 74.7, adopted on January 10, 1989.

(180) [Reserved]

(181) New and amended regulations for the following APCD were submitted on October 16, 1990, by the Governor's designee.

(i) Incorporation by reference.

(A) Ventura County Air Pollution Control District.

(*1*) Rule 71.2, adopted on September 26, 1989.

(182) New and amended regulations for the following APCDs were submitted on December 31, 1990, by the Governor's designee.

(i) Incorporation by reference.

(A) South Coast Air Quality Management District.

(*1*) Rules 1175 and 1176, adopted on January 5, 1990.

(*2*) Rule 109, adopted on May 5, 1989.

(*3*) Rule 108, adopted on April 6, 1990.

(*4*) Rule 461, adopted on July 7, 1989.

(B) Bay Area Air Quality Management District.

(*1*) Regulation 8, Rule 8, adopted on November 1, 1989.

(*2*) Amended Rule 8-28, adopted September 6, 1989.

(*3*) Rule 8–46, adopted July 12, 1989.

(*4*) Amended Regulation 8, Rule 16, adopted on August 2, 1989.

(*5*) Amended Regulation 8, Rule 11, adopted on September 20, 1989.

(C) San Luis Obispo County Air Pollution Control District.

(*1*) Rule 424, adopted on July 18, 1989.

(D) Santa Barbara County Air Pollution Control District.

(*1*) Amended Rule 323, adopted on February 20, 1990.

(183) New and amended regulations for the following APCD's were submitted on April 5, 1991, by the Governor's designee.

(i) Incorporation by reference.

(A) San Diego County Air Pollution Control District.

(*1*) Rule 67.8, adopted on December 18, 1990.

(*2*) Rule 61.9, adopted on March 14, 1989, is now removed without replacement as of April 19, 1994.

(*3*) Revised Rule 67.3, adopted on October 16, 1990.

(*4*) Amended Rule 61.4, adopted on October 16, 1990.

(*5*) Amended Rule 67.4, adopted July 3, 1990.

(*6*) Amended Rule 61.0, adopted on September 16, 1990.

(*7*) New Rule 67.12, adopted December 4, 1990.

(*8*) [Reserved]

(*9*) Amended Rule 67.18, adopted on July 3, 1990.

(*10*) Revised Rules 61.2, 61.3, and 67.5, adopted October 16, 1990.

(*11*) Amended Rule 61.1, adopted October 16, 1990.

(*12*) Rule 67.6, adopted on October 16, 1990.

(*13*) Rule 67.15, adopted on December 18, 1990.

(B) Ventura County Air Pollution Control District.

(*1*) Rules 74.5.1 and 74.5.2, adopted on December 4, 1990.

(*2*) Rule 71, adopted on September 11, 1990.

(*3*) Rule 74.13, adopted on January 22, 1991.

(C) Placer County Air Pollution Control District.

(*1*) Amended Rule 217, adopted on September 25, 1990.

(*2*) Amended Rule 213, adopted on September 25, 1990.

(*3*) New Rule 410 and Amended Rule 223, adopted on September 25, 1990.

(*4*) Amended Rule 212, adopted September 25, 1990.

(*5*) Rule 216, adopted on September 25, 1990.

(D) Sacramento Metropolitan Air Quality Management District.

(*1*) Amended rules 443, adopted September 25, 1990, and 452, adopted August 21, 1990.

(E)(*1*) [Reserved]

(*2*) Rule 316, adopted on July 10, 1990.

(F) Bay Area Air Quality Management District.

(*1*) Amended Regulation 8, Rule 43, adopted on June 20, 1990.

(*2*) Regulation 8, Rule 17, adopted on September 5, 1990.

(184) New and amended regulations for the following APCDs were submitted on May 13, 1991, by the Governor's designee.

(i) Incorporation by reference.

(A) Sacramento Metropolitan Air Quality Management District.

(*1*) Amended rule 445, adopted November 6, 1990.

(*2*) Amended Rules 442, adopted October 2, 1990, and 446, adopted December 4, 1990.

(B) South Coast Air Quality Management District.

(*1*) Rules 1102 and 1102.1, adopted on December 7, 1990.

(*2*) Rule 465, adopted on December 7, 1990, and Rule 1123, adopted on December 7, 1990.

EDITORIAL NOTE: At 57 FR 48459, Oct. 26, 1992, the following paragraph (c)(184)(i)(B)(*2*) was added to § 52.220.

(*2*) Rules 1162 and 1173, adopted on December 7, 1990.

(*3*) Rules 1153 and 1164, adopted on January 4, 1991, and December 7, 1990, respectively.

(*4*) New Rule 1174, adopted on October 5, 1990.

(C) Bay Area Air Quality Management District.

(*1*) Rule 8-37, adopted on October 17, 1990.

(D)(*1*) Amended Rule 67.0, adopted on December 4, 1990.

(E) Yolo-Solano Air Quality Management District.

(*1*) Rule 2.24, adopted on November 14, 1990.

(185) New and amended regulations for the following APCD's were submitted on May 30, 1991, by the Governor's designee.

(i) Incorporation by reference.

(A) Kern County Air Pollution Control District.

(*1*) Rules 410.6 and 410.6A, adopted on May 6, 1991.

(*2*) Rule 410.5, adopted on May 6, 1991.

(*3*) Rule 410.4A, adopted on May 6, 1991.

(*4*) Amended Rule 410.1, adopted on May 6, 1991.

(*5*) Amended Rules 414 and 414.1 and New Rule 414.5, adopted on May 6, 1991.

(*6*) Revised Rule 410.4, adopted on May 6, 1991.

(*7*) Rule 410.3 and Rule 412, adopted on May 6, 1991.

(*8*) [Reserved]

(*9*) Rule 410.7, adopted May 6, 1991.

(B) San Diego County Air Pollution Control District.

(*1*) Rule 67.2, adopted on May 21, 1991.

(*2*) Rule 67.7, adopted on May 21, 1991.

(*3*) [Reserved]

(*4*) Amended Rule 67.16, adopted on May 21, 1991.

(*5*) Rule 67.1, adopted on May 21, 1991.

(C) San Joaquin Valley Unified Air Pollution Control District.

(*1*) Rules 467.1 and 467.2, adopted on April 11, 1991.

(*2*) Rule 460.2, adopted on April 11, 1991.

(*3*) New Rule 460.1, adopted on April 11, 1991.

(*4*) New Rules 463.4, 464.1, and 464.2, adopted on April 11, 1991.

(*5*) New Rule 461.2, adopted on April 11, 1991.

(*6*) Amended Rules 465.3 and 466.1, adopted April 11, 1991.

(D) Placer County Air Pollution Control District.

(*1*) Amended Rule 215, adopted on September 25, 1990.

(186) New and amended regulations for the following APCDs were submitted on October 25, 1991, by the Governor's designee.

(i) Incorporation by reference.

(A) Sacramento Metropolitan Air Quality Management District.

(*1*) Amended Rules 447 adopted April 30, 1991.

(B) San Joaquin Valley Unified Air Pollution Control District.

(*1*) Rule 468.1, adopted on May 16, 1991.

(C) South Coast Air Quality Management District.

(*1*) Rule 1104, adopted March 1, 1991.

(D) Ventura County Air Pollution Control District.

(*1*) Rule 62.6, adopted on July 16, 1991.

(*2*) Rule 103, adopted on June 4, 1991.

(187) New and amended regulations for the following APCDs were submitted on January 28, 1992, by the Governor's designee.

(i) Incorporation by reference.

(A) San Joaquin Valley Unified Air Pollution Control District.

(*1*) Rule 463.1, adopted on September 19, 1991.

(*2*) Rule 460.2 adopted on September 19, 1991.

(*3*) New Rule 463.2, adopted on September 19, 1991.

(*4*) New Rule 460.4, adopted on September 19, 1991.

(*5*) Rule 461.1 and Rule 465.2, adopted on September 19, 1991.

(B) Ventura County Air Pollution Control District.

(*1*) New Rule 74.17, adopted on September 17, 1991.

(C) South Coast Air Quality Management District.

(*1*) Rule 1142, adopted on June 19, 1991.

(188) New and amended regulations for the following APCDs were submitted on June 19, 1992, by the Governor's designee.

(i) Incorporation by reference.

(A) Santa Barbara County Air Pollution Control District.

(*1*) Rule 339, adopted on November 5, 1991.

(*2*) Rule 331, adopted on December 10, 1991.

(*3*) Rule 342, adopted on March 10, 1992.

(*4*) Rule 329, adopted on February 25, 1992.

(B) San Bernardino County Air Pollution Control District.

(*1*) Rule 1116, adopted on March 2, 1992.

(C) South Coast Air Quality Management District.

(*1*) Rule 1171, adopted on August 2, 1991.

(D) Ventura County Air Pollution Control District.

(*1*) Rule 74.18, adopted on January 28, 1992.

(*2*) Rule 74.6, adopted on December 10, 1991.

(*3*) Rule 74.3, adopted on December 10, 1991.

(E) [Reserved]

(F) Sacramento Metropolitan Air Quality Management District.

(*1*) Rules 448 and 449 adopted on December 17, 1991.

(189) New and amended regulations for the following APCDs were submitted on September 14, 1992, by the Governor's designee.

(i) Incorporation by reference.

(A) South Coast Air Quality Management District.

(*1*) Rule 1115, adopted on March 6, 1992.

(*2*) Rule 1126, adopted on March 6, 1992.

(*3*) Rule 1128, adopted on February 7, 1992, and Rule 1141, adopted on April 3, 1992.

(*4*) Rules 1125 and 1136, adopted on August 2, 1991.

(*5*) New Rule 1179, adopted March 6, 1992.

(*6*) Rule 109 adopted on March 6, 1992, and Rule 1106.1 adopted on May 1, 1992.

(B) Ventura County Air Pollution Control District.

(*1*) Rule 71.1 and Rule 71.3, adopted on June 16, 1992.

(*2*) Rule 74.10, adopted on June 16, 1992.

(C) Bay Area Air Quality Management District.

(*1*) Rule 8–49, adopted on August 21, 1992.

(190) New and amended regulations for the following APCDs were submitted on November 12, 1992, by the Governor's designee.

(i) Incorporation by reference.

(A) Ventura County Air Pollution Control District.

(*1*) Revised Rule 74.19, adopted August 11, 1992.

(B) Bay Area Air Quality Management District.

(*1*) Rule 8–18, adopted on March 4, 1992.

(191) New and amended regulations for the following APCDs were submitted on January 11, 1993, by the Governor's designee.

(i) Incorporation by reference.

(A) South Coast Air Quality Management District.

(*1*) Rule 1145, adopted on January 10, 1992.

(B) Santa Barbara County Air Pollution Control District.

(*1*) Rule 346, adopted on October 13, 1992.

(C) San Bernardino County Air Pollution Control District.

(*1*) Rule 463, adopted on November 2, 1992.

(192) New and amended regulations for the following APCDs were submitted on April 6, 1993, by the Governor's designee.

(i) Incorporation by reference.

(A) Sacramento Air Quality Management District.

(*1*) Rule 456, adopted on February 23, 1993.

(*2*) Rule 454, adopted on February 23, 1993.

(*3*) Revised Rule 450, adopted February 23, 1993.

(193) New and amended regulations for the following APCDs were submitted on May 13, 1993, by the Governor's designee.

(i) Incorporation by reference.

(A) South Coast Air Quality Management District.

(*1*) Rule 1106, adopted on August 2, 1991; Rule 1107, adopted on August 2, 1991; and Rule 1151, adopted on September 6, 1991.

(*2*) Rule 1130 adopted on March 6, 1992.

(B) San Luis Obispo County Air Pollution Control District.

(*1*) Rule 417, adopted February 9, 1993.

(C) Butte County Air Pollution Control District.

(*1*) Rule 241, adopted on January 12, 1993.

(194) New and amended regulations for the following APCDs were submitted on November 18, 1993, by the Governor's designee.

(i) Incorporation by reference.

(A) Ventura County Air Pollution Control District.

(*1*) Rule 70, adopted on May 4, 1993; Rule 71, adopted on June 8, 1993; and Rule 71.4, adopted on June 8, 1993.

(*2*) Rule 59, adopted on September 15, 1992.

(*3*) Rule 74.15.1, adopted on May 11, 1993.

(*4*) Rule 74.21, adopted on April 6, 1993.

(B) Kern County Air Pollution Control District.

(*1*) Rule 410.4, adopted on July 12, 1993.

(*2*) Rule 425, adopted on August 16, 1993.

(*3*) Previously submitted to EPA on June 28, 1982 and approved in the FEDERAL REGISTER on May 3, 1984 and now removed without replacement, Rule 425.

(C) San Joaquin Valley Unified Air Pollution Control District.

(*1*) Rule 4603, adopted on May 20, 1993.

(*2*) Rule 4621, adopted on May 20, 1993.

(D) Santa Barbara County Air Pollution Control District.

(*1*) Rule 349, adopted on April 27, 1993.

(E) San Diego County Air Pollution Control District.

(*1*) Rule 67.12, adopted on April 6, 1993.

(F) Monterey Bay Unified Air Pollution Control District

(*1*) Rule 417, Rule 418, and Rule 427, adopted on August 25, 1993.

(*2*) Rule 425, adopted on August 25, 1993.

(*3*) Rule 420 and Rule 426, adopted on August 25, 1993.

(*4*) Previously submitted to EPA on February 6, 1975 and approved in the FEDERAL REGISTER on July 13, 1987 and now removed without replacement, Rule 428.

(G) South Coast Air Quality Management District.

(*1*) Rule 1130.1, adopted July 9, 1993.

(195) New and amended regulations for the following APCDs were submitted on February 11, 1994, by the Governor's designee.

(i) Incorporation by reference.

(A) San Diego Air Pollution Control District.

(*1*) Rule 67.17, adopted on September 21, 1993.

(B) Ventura County Air Pollution Control District.

(*1*) Rule 74.22, adopted on November 9, 1993.

(196) New and amended regulations for the following APCDs were submitted on March 29, 1994 by the Governor's designee.

(i) Incorporation by reference.

(A) Sacramento Metropolitan Air Quality Management District.

(*1*) Sacramento Metropolitan AQMD rules 442, 443, 446, 447, and 452 adopted on November 16, 1993.

(B) Ventura County Air Pollution Control District.

(*1*) Rule 74.9, adopted on December 21, 1993.

(C) Santa Barbara County Air Pollution Control District.

(*1*) Rule 316, adopted on December 14, 1993.

(*2*) Rules 325 & 326, adopted on January 25, 1994 and December 14, 1993, respectively.

(197) New and amended regulations for the following APCDs were submitted on May 24, 1994, by the Governor's designee.

(i) Incorporation by reference.

(A) South Coast Air Quality Management District.

(*1*) Rules 1162, 1173, 1175 and 1176, adopted on May 13, 1994.

(B) Bay Area Air Quality Management District.

(*1*) Rule 8–6, adopted on February 2, 1994.

(C) San Joaquin Valley Unified Air Pollution Control District.

(*1*) Rule 4622, adopted on February 17, 1994.

(198) New and amended regulations for the following APCDs were submitted on July 13, 1994, by the Governor's designee.

(i) Incorporation by reference.

(A) Bay Area Air Quality Management District.

(*1*) Revised Rule 8–8, adopted on June 15, 1994.

(B) Placer County Air Pollution Control District

(*1*) Rule 230, adopted on June 28, 1994.

(C) San Joaquin Valley Unified Air Pollution Control District.

(*1*) Rule 4407, adopted on May 19, 1994.

(*2*) Rule 4682 adopted on June 16, 1994 and Rule 4684 adopted on May 19, 1994.

(*3*) Rule 4607, adopted on May 19, 1994.

(D) Sacramento Metropolitan Air Quality Management District.

(*1*) Rule 458, adopted on June 7, 1994.

(E) Mojave Desert Air Quality Management District.

(*1*) Rules 461 and 462, adopted on May 25, 1994.

(*2*) Rule 1117 adopted June 22, 1994.

(F) Monterey Bay Unified Air Pollution Control District.

(*1*) Rule 430, adopted on May 25,1994.

(*2*) Rule 416, adopted April 20, 1994.

(G) [Reserved]

(H) South Coast Air Quality Management District.

(*1*) Rule 1146 and Rule 1146.1, adopted May 13, 1994.

(I) San Diego County Air Pollution Control District.

(*1*) Rule 67.10, adopted on June 15, 1994.

(J) Ventura County Air Pollution Control District.

(*1*) Rule 74.28, adopted on May 10, 1994.

(*2*) Rule 74.30 adopted May 17, 1994.

(K) Santa Barbara County Air Pollution Control District.

(*1*) Rule 354, adopted June 28, 1994.

(*2*) Rule 359, adopted on June 28, 1994.

(199) New and amended regulations for the following APCDs were submitted on September 28, 1994 by the Governor's designee.

(i) Incorporation by reference.

(A) Bay Area Air Quality Management District.

(*1*) Regulation 8, Rules 11 and 16 adopted on June 15, 1994, and Regulation 8, Rule 28 adopted on June 1, 1994.

(*2*) Regulation 8, Rules 14 and 43 adopted on June 1, 1994, and regulation 8, Rules 13, 23, 47 adopted on June 15, 1994.

(*3*) Rules 8–25 and 8–42, adopted on June 1, 1994 and Rule 8–50, adopted on June 15, 1994.

(*4*) Rule 8–22, adopted on June 1, 1994.

(*5*) Rules 8–29, 8–33, and 8–39, adopted on June 1, 1994, and Rules 8–19 and 8–38, adopted on June 15, 1994.

(*6*) Rules 8–4, 8–7, 8–15, 8–31, and 8–41 adopted on June 1, 1994. Rules 8–1, 8–2, 8–12, 8–20, 8–24, 8–30, 8–34, 8–35, and 8–40 adopted on June 15, 1994. Rule 8–32 adopted on July 6, 1994.

(B) San Luis Obispo County Air Pollution Control District.

(*1*) Rule 419, adopted July 12, 1994.

(C) Monterey Bay Unified Air Pollution Control District.

(*1*) Rules 433 and 434, adopted June 15, 1994.

(D) San Joaquin Valley Unified Air Pollution Control District.

(*1*) Rule 4352, adopted on September 14, 1994.

(*2*) Rule 4354, adopted on September 14, 1994.

(200) Program elements were submitted on November 13, 1992 by the Governor's designee.

(i) Incorporation by reference.

(A) Small Business Stationary Source Technical and Environmental Compliance Assistance Program, adopted on October 15, 1992.

(201) [Reserved]

(202) New and amended regulations for the following APCDs were submitted on October 19, 1994, by the Governor's designee.

(i) Incorporation by reference.

(A) Bay Area Air Quality Management District.

(*1*) Rule 2–1, adopted on June 15, 1994.

(B) [Reserved]

(C) San Diego County Air Pollution Control District. (*1*) Rule 67.4, adopted on September 27, 1994.

(*2*) Rule 67.16, adopted on September 20, 1994.

(*3*) Rule 69.2, adopted on September 27, 1994.

(*4*) Rule 68, adopted on September 20, 1994.

(D) Mojave Desert Air Quality Management District.

(*1*) Rule 464, adopted August 24, 1994.

(E) Placer County Air Pollution Control District.

(*1*) Rule 250, adopted on October 17, 1994.

(*2*) Rule 233, adopted on October 6, 1994.

(203) [Reserved]

(204) New and amended plans and regulations for the following agencies were submitted on November 15, 1994, by the Governor's designee.

(i) Incorporation by reference.

(A) California Air Resources Board.

(*1*) Title 17, California Code of Regulations, Subchapter 8.5, Consumer Products, Article 1, Antiperspirants and Deodorants, Sections 94500–94506.5 and Article 2, Consumer Products, Sections 94507–94517, adopted on December 27, 1990, August 14, 1991, and September 21, 1992.

(*2*) Title 13, California Code of Regulations, Diesel Fuel Regulations, Sections 2281–2282, adopted on August 22, 1989, June 21, 1990, April 15, 1991, October 15, 1993, and August 24, 1994.

(*3*) Title 13, California Code of Regulations, Reformulated Gasoline Regulations, Sections 2250, 2252, 2253.4, 2254, 2257, 2260, 2261, 2262.1, 2262.2, 2262.3, 2262.4, 2262.5, 2262.6, 2262.7, 2263, 2264, 2266–2272, and 2296, 2297, adopted on April 1, 1991, May 23, 1991, and September 18, 1992.

(*4*) Long Term Measures, Improved Control Technology for Light-Duty Vehicles (Measure M2), Off-Road Industrial Equipment (Diesel), Consumer Products Long-Term Program (Measure CP4), and Additional Measures (Possible Market-Incentive Measures and Possible Operational Measures Applicable to Heavy-Duty Vehicles), as contained in ''The California State Implementation Plan for Ozone, Volume II: The Air Resources Board's Mobile

Source and Consumer Products Elements,'' adopted on November 15, 1994.

(*5*) Mid-Term Measures, Accelerated Ultra-Low Emission Vehicle (ULEV) requirement for Medium-Duty Vehicles (Measure M3), Heavy-Duty Vehicles NO_X regulations (Measure M5), Heavy-Duty Gasoline Vehicles lower emission standards (Measure M8), Industrial Equipment, Gas & LPG—3-way catalyst technology (Measure M11), Mid-Term Consumer Products (Measure CP–2), as contained in The California State Implementation Plan for Ozone, Volume II: The Air Resources Board's Mobile Source and Consumer Products Elements, adopted on Nov. 15, 1994.

(B) South Coast Air Quality Management District.

(*1*) Long Term Measures, Advance Technology for Coating Technologies (Measure ADV–CTS–01), Advance Technology for Fugitives (Measure ADV–FUG), Advance Technologies for Process Related Emissions (Measure ADV–PRC), Advance Technologies for Unspecified Stationary Sources (Measure ADV–UNSP), and Advance Technology for Coating Technologies (Measure ADV–CTS–02), as contained in the ''1994 Air Quality Management Plan,'' adopted on September 9, 1994.

(205)(i)(A) [Reserved]

(B) Bay Area Air Quality Management District.

(*1*) Amendments to the San Francisco Bay Area Redesignation Requestand Maintenance Plan for the National Ozone Standard and 1990 Emissions Inventory adopted on September 7, 1994 by the Bay Area Air Quality Management District, October 5, 1994 by the Metropolitan Transportation Commission, and August 24, 1994 by the Association of Bay Area Governments.

(206) Amended rule for the following APCD was submitted on November 23, 1994, by the Governor's designee.

(i) Incorporation by reference.

(A) San Diego County Air Pollution Control District.

(*1*) Rule 67.3, adopted on November 1, 1994.

(207) New and amended regulations for the following APCDs were submitted on November 30, 1994, by the Governor's designee.

(i) Incorporation by reference.

(A) Placer County Air Pollution Control District.

(*1*) Rule 223, adopted on October 6, 1994.

(B) El Dorado County Air Pollution Control District.

(*1*) Rule 224, adopted on September 27, 1994.

(*2*) Rule 231, adopted September 27, 1994.

(*3*) [Reserved]

(*4*) Rules 225 and 230 adopted September 27, 1994.

(C) Yolo-Solano Air Quality Management District.

(*1*) Rule 2.21, adopted on March 23, 1994.

(*2*) Rule 2.28, adopted on May 25, 1994.

(*3*) Rules 2.25 and 2.33, adopted April 27, 1994 and September 14, 1994, respectively.

(*4*) Rule 2.13 adopted May 25, 1994.

(D) Mojave Desert Air Quality Management District.

(*1*) Rule 1102, adopted October 26, 1994.

(*2*) Rule 1104 adopted September 28, 1994.

(208) New and amended regulations for the following APCDs were submitted on December 19, 1994, by the Governor's designee.

(i) Incorporation by reference.

(A) Placer County Air Pollution Control District.

(*1*) Rule 410, adopted on November 3, 1994.

(*2*) Rule 212, adopted on November 3, 1994.

(209) [Reserved]

(210) New and amended regulations for the following APCDs were submitted on December 22, 1994 by the Governor's designee.

(i) Incorporation by reference.

(A) Bay Area Air Quality Management District.

(*1*) Rule 8–45, adopted on November 2, 1994.

(B) San Diego County Air Pollution Control District.

(*1*) Rule 67.18, adopted on December 13, 1994.

(C) Mojave Desert Air Quality Management District.

(*1*) Rule 1103, adopted on December 21, 1994.

(*2*) Rule 471, adopted on December 21, 1994.

(D) Monterey Bay Unified Air Pollution Control District.

(*1*) Rule 1002, adopted on November 23, 1994.

(211) Revised Clean Air Plans for ozone for the following APCDs submitted on November 14, 1994, by the Governor's designee.

(i) Incorporation by reference.

(A) Santa Barbara Air Pollution Control District

(1) TCM–5, Improve Commuter Public Transit Service, adopted on November 2, 1994

(212) Ozone redesignation request for the Bay Area Air Quality Management District submitted on November 5, 1993, by the Governor's designee.

(i) Incorporation by reference.

(A) Redesignation request for the San Francisco Bay Area and the Ozone Maintenance Plan for the National Ozone Standard adopted on September 1, 1993 by the Bay Area Air Quality Management District, September 22, 1993 by the Metropolitan Transportation Commission, and September 16, 1993 by the Association of Bay Area Governments.

(213) [Reserved]

(214) New and amended regulations for the following APCDs were submitted on January 24, 1995, by the Governor's designee.

(i) Incorporation by reference.

(A) South Coast Air Quality Management District.

(*1*) Rule 1151, adopted on December 9, 1994.

(B) San Diego County Air Pollution Control District.

(*1*) Rule 61.1 adopted on January 10, 1995.

(C) Santa Barbara County Air Pollution Control District.

(*1*) Rule 337, adopted October 20, 1994.

(*2*) Rule 344, adopted on November 10, 1994.

(D) Ventura County Air Pollution Control District.

(*1*) Rule 74.15, adopted on November 8, 1994.

(*2*) Rule 74.26 and Rule 74.27, adopted on November 8, 1994.

(E) Placer County Air Pollution Control District.

(*1*) Rule 215, adopted on November 3, 1994.

(215) New and amended regulations for the following APCDs were submitted on February 24, 1995, by the Governor's designee.

(i) Incorporation by reference.

(A) South Coast Air Quality Management District.

(*1*) Rules 1125 and 1126, adopted on January 13, 1995.

(*2*) Rule 1153 adopted on January 13, 1995.

(*3*) Rule 1106, adopted on January 13, 1995.

(*4*) Rule 1164, adopted on January 13, 1995.

(*5*) Rule 1124, adopted January 13, 1995.

(B) Ventura County Air Pollution Control District.

(*1*) Rule 74.12 adopted on January 10, 1995.

(*2*) Rule 71 and Rule 71.5, adopted on December 13, 1994.

(*3*) Rule 74.18 adopted December 13, 1994.

(C) San Joaquin Valley Unified Air Pollution Control District.

(*1*) Rule 4403, adopted on February 16, 1995.

(D) [Reserved]

(*1*) Rule 2.26 adopted November 9, 1994.

(216) New and amended regulations for the following APCDs were submitted on March 31, 1995, by the Governor's designee.

(i) Incorporation by reference.

(A) Mojave Desert Air Quality Management District.

(*1*) Rule 1116, adopted on February 22, 1995.

(*2*) Rule 221, adopted December 21, 1994.

(*3*) Rule 1159, adopted on February 22, 1995.

(*4*) Rule 1114 adopted February 22, 1995.

(B) Bay Area Air Quality Management District.

(*1*) Amended Regulation 2, Rule 1, Section 129 adopted on February 1, 1995; Amended Regulation 2, Rule 6, Sections 232, 234, 310, 311, 403, 404, 420, 421, 422, 423 adopted on February 1, 1995.

(217) New and amended regulations for the following APCDs were submitted on February 28, 1994, by the Governor's designee.

(i) Incorporation by reference.

(A) Bay Area Air Quality Management District.

(*1*) Amended Regulation 2, Rule 1, Sections 102, 129, 204, 213, 214, 215, 216, 217, 218, 219, 302, 408, 411 adopted November 3, 1993; and New Regulation 2, Rule 6, Sections 206, 207, 210, 212, 213, 214, 218, 222, 230, 231, 301, 311, 401, 402, 403, 404, 420, 421, 422, 602 adopted November 3, 1993.

(B) Lake County Air Pollution Control District.

(1) New Regulation 12, section 12.200 (a4), (c2), (d1), (d2), (d3), (e3), (f1), (f2), (m1), (o1), (p1), (p2), (s3), and sections 12.800–12.850, adopted October 19, 1993.

(218) New and amended regulations for the Bay Area Air Quality Management District were submitted on April 29, 1994 by the Governor's designee.

(i) Incorporation by reference.

(A) New Regulation 2, Rule 6, Sections 310 and 423 adopted November 3, 1993.

(219) New and amended regulations for the following APCDs were submitted on April 13, 1995, by the Governor's designee.

(i) Incorporation by reference.

(A) Santa Barbara County Air Pollution Control District.

(*1*) Rule 339, adopted December 15, 1994.

(220) New and amended regulations for the following APCDs were submitted on May 24, 1995, by the Governor's designee.

(i) Incorporation by reference.

(A) Santa Barbara County Air Pollution Control District.

(*1*) Rule 323, adopted March 16, 1995.

(B) [Reserved]

(*1*) [Reserved]

(*2*) Rule 236 adopted on February 9, 1995.

(221) New and amended regulations for the following APCDs were submitted on May 25, 1995 by the Governor's designee.

(i) Incorporation by reference.

(A) Kern County Air Pollution Control District.

(*1*) Rule 411 and Rule 413, adopted on April 6, 1995.

(222) New and amended regulations for the following APCDs were submitted on June 16, 1995, by the Governor's designee.

(i) Incorporation by reference.

(A) South Coast Air Quality Management District.

(*1*) Rules 1107, 1115, and 1171 adopted on May 12, 1995.

(B) El Dorado County Air Pollution Control District.

(*1*) Rule 234, adopted on April 25, 1995.

(C) Sacramento Metropolitan Air Quality Management District.

(*1*) Rule 411, adopted on February 2, 1995.

(*2*) Rule 413, adopted on April 6, 1995.

(*3*) Rule 412, adopted on June 1, 1995.

(D) San Diego County Air Pollution Control District.

(*1*) Rule 67.24, adopted on March 7, 1995.

(223) Revised ozone transportation control measure (TCM) for the San Joaquin Valley submitted on March 2, 1995, by the Governor's designee.

(i) Incorporation by reference.

(A) Railroad Grade Separations TCM, adopted on September 14, 1994.

(224) New and amended regulations for the following APCDs were submitted on August 10, 1995, by the Governor's designee.

(i) Incorporation by reference.

(A) Sacramento Metropolitan Air Quality Management District.

(*1*) Rule 448 and rule 449, adopted on February 2, 1995.

(225) New and amended regulations for the following APCDs were submitted on October 13, 1995 by the Governor's designee.

(i) Incorporation by reference.

(A) South Coast Air Quality Management District.

(*1*) Rules 1130 and 1136 adopted September 8, 1995.

(B) Placer County Air Pollution Control District.

(*1*) Rule 238, adopted June 8, 1995.

(*2*) Rule 212, adopted on June 8, 1995.

(*3*) Rule 239, adopted June 8, 1995.

(*4*) [Reserved]

(*5*) Rule 216 adopted on June 8, 1995.

(C) [Reserved]

(*1*) [Reserved]

(*2*) Rule 235 adopted on June 27, 1995.

(D) San Joaquin Valley Unified Air Pollution Control District.

(*1*) Rule 4602, adopted June 15, 1995.

(226) Air Quality Management Plan for the following APCD was submitted on September 11, 1991, by the Governor's designee.

(i) Incorporation by reference.

(A) Great Basin Unified Air Pollution Control District.

(*1*) Air Quality Management Plan for the Mammoth Lakes PM–10 Planning Area adopted December 12, 1990.

(227) New regulation for the following APCD was submitted on October 18, 1995, by the Governor's designee.

(i) Incorporation by reference.

(A) San Joaquin Valley Unified Air Pollution Control District.

(*1*) Rule 2530, adopted on June 15, 1995.

(228) Air Quality Management Plans for the following APCD were submitted on January 9, 1992, by the Governor's designee.

(i) Incorporation by reference.

(A) Great Basin Unified Air Pollution Control District.

(*1*) Revisions to the Air Quality Management Plan for Mammoth Lakes PM–10 Planning Area adopted November 6, 1991.

(*i*) Rule 431 adopted November 6, 1991.

(*ii*) Town of Mammoth Lakes Municipal Code Chapter 8.30 dated October 2, 1991.

[37 FR 10850, May 31, 1972]

EDITORIAL NOTE: For FEDERAL REGISTER citations affecting §52.220, see the List of CFR Sections Affected in the Finding Aids section of this volume.

EFFECTIVE DATE NOTE: 1. At 61 FR 20139, May 6, 1996, §52.220 was amended by adding paragraphs (c)(196)(i)(C)(*2*), (215)(i)(A)(*5*), and (225)(i)(D), effective July 5, 1996.

2. At 61 FR 20147, May 6, 1996, §52.220 was amended by adding paragraphs (c)(214)(i)(D)(2) and (E) and (c)(225)(i)(B)(2), effective July 5, 1996.

3. At 61 FR 20454, May 7, 1996, §52.220 was amended by adding paragraph (c)(198)(i)(K)(*2*), effective July 8, 1996.

4. At 61 FR 29662, June 12, 1996, §52.220 was amended by adding paragraphs (c)(185)(i)(A)(*9*), (194)(i)(G), (198)(i)(K), (207)(i)(B)(*2*), and (225)(i)(B)(*3*), effective Aug. 12, 1996.

5. At 61 FR 32345, June 24, 1996, §52.220 was amended by adding paragraphs (c) (226) and (228), effective Aug. 23, 1996.

§52.221 Classification of regions.

The California plan was evaluated on the basis of the following classifications:

Air quality control region	Pollutant				
	Particulate matter	Sulfur oxides	Nitrogen dioxide	Carbon monoxide	Photochemical oxidants (hydrocarbons)
North Coast Intrastate	II	III	III	III	III
San Francisco Bay Area Intrastate	II	II	III	I	I
North Central Coast Intrastate	II	III	III	III	I
South Central Coast Intrastate	III	III	III	III	III
Metropolitan Los Angeles Intrastate	I	II	I	I	I
Northeast Plateau Intrastate	III	III	III	III	III
Sacramento Valley Intrastate	II	III	III	I	I
San Joaquin Valley Intrastate	I	III	III	I	I
Great Basin Valley Intrastate	III	III	III	III	III
Southeast Desert Intrastate	I	III	III	III	I
San Diego Intrastate	II	III	III	I	I
Lake County Intrastate	II	III	III	III	III
Lake Tahoe Intrastate	II	III	III	I	I
Mountain Counties Intrastate	II	III	III	I	I

[37 FR 10850, May 31, 1972, as amended at 39 FR 16346, May 8, 1974; 46 FR 3884, Jan. 16, 1981]

§52.222 Negative declarations.

(a) The following air pollution control districts submitted negative declarations for volatile organic compound source categories to satisfy the requirements of section 182 of the Clean Air Act, as amended. The following negative declarations are approved as additional information to the State Implementation Plan.

(1) Mojave Desert Air Quality Management District.

(i) Natural Gas and Gasoline Processing Equipment and Chemical Processing and Manufacturing were submitted

on July 13, 1994 and adopted on May 25, 1994.

(ii) Asphalt Air Blowing was submitted on December 20, 1994 and adopted on October 26, 1994.

(iii) Vacuum Producing Devices or Systems was submitted on December 29, 1994 and adopted on December 21, 1994.

[60 FR 47076, Sept. 11, 1995]

§ 52.223 Approval status.

(a) With the exceptions set forth in this subpart, the Administrator approves California's plan for the attainment and maintenance of the national standards under section 110 of the Clean Air Act.

(b) With the exceptions set forth in this subpart, the Administrator approves the plan with respect to Part D, Title I of the Clean Air Act, as amended in 1977, for the nonattainment areas listed in this paragraph. In addition, continued satisfaction of the requirements of Part D for the ozone portion of the State Implementation Plan (SIP) depends on the adoption and submittal of reasonably available control technology (RACT) requirements by July 1, 1980, for sources covered by Control Technique Guidelines (CTGs) issued between January 1978 and January 1979 and adoption and submittal by each subsequent January of additional RACT requirements for sources covered by CTGs issued by the previous January.

(1) Imperial County for O_3.

(2) North Central Coast Air Basin for O_3.

(3) South Coast Air Basin for O_3, CO, NO_2, and PM.

(4) San Diego Air Basin for O_3, CO, and TSP.

(5) San Joaquin Valley Air Basin.

(i) Kern County nonattainment area for ozone, CO, SO_2, and PM.

(ii) Kings County for O_3 and TSP.

(iii) Madera County for O_3 and TSP.

(iv) Merced County for O_3 and TSP.

(v) San Joaquin County for CO, O_3 and TSP.

(vi) Stanislaus County for CO, O_3 and TSP.

(vii) Tulare County for O_3 and TSP.

(viii) Fresno County for O_3, CO, and TSP.

(6) South Central Coast Air Basin.

(i) Santa Barbara County nonattainment area for O_3, CO and TSP.

(ii) Ventura County for O_3, CO and TSP.

(7) Sacramento Valley Air Basin.

(i) Butte County for O_3 and CO.

(ii) Sutter County for O_3.

(iii) Yuba County for O_3.

(iv) Sacramento AQMA for O_3.

(v) Sacramento County Metropolitan Area for CO.

(8) Southeast Desert Air Basin.

(i) Los Angeles County for Ozone.

(ii) San Bernardino County for Ozone.

(iii) Riverside County for Ozone.

(9) San Francisco Bay Area Air Basin for O_3, CO and TSP.

(10) Mountain Counties Air Basin.

(i) El Dorado County (Mountain Counties Air Basin portion) for O_3.

(ii) Placer County (Mid-County portion) for O_3.

(c) [Reserved]

(d) With the exceptions set forth in this subpart, the Administrator approves the plan with respect to Part D, Title I of the Clean Air Act, as amended in 1977, for the nonattainment areas listed in this paragraph.

(1) Lake Tahoe Basin for CO.

(2) EPA approves the CO plan for the Lake Tahoe Basin as meeting the requirements of Part D. This approval includes the resolution of the Lake Tahoe Regional Planning Agency banning new source construction pending the adoption of a new regional plan and ordinances. However, EPA disapproves the plan for any future time during which the Tahoe Regional Planning Agency may remove its construction ban prior to EPA approval of the new regional plan and ordinances.

[45 FR 74484, Nov. 11, 1980]

EDITORIAL NOTE: For FEDERAL REGISTER citations affecting § 52.223, see the List of CFR Sections Affected in the Finding Aids section of this volume.

§ 52.224 General requirements.

(a) The requirements of § 51.116(c) of this chapter are not met except in certain Air Pollution Control Districts (APCD) as indicated in this paragraph since the plan does not provide procedures by which emission data, as correlated with applicable emission limitations, will be made available to the public.

(1) The following APCD's meet the requirements of § 51.116(c) of this chapter:

(i) Siskiyou County APCD.
(ii) San Diego County APCD.
(iii) Great Basin Unified APCD.
(iv) Del Norte County APCD.
(v) Humboldt County APCD.
(vi) Mendocino County APCD.
(vii) Northern Sonoma County APCD.
(viii) Trinity County APCD.
(ix) Amador County APCD.

(2) The following APCD's do not provide for the correlation of emission data with applicable emission limitations as required by § 51.116(c) of this chapter. In these APCD's, only the requirements of § 52.224(b)(4) are in effect:

(i) Merced County APCD.
(ii) Stanislaus County APCD.
(iii) Fresno County APCD.
(iv) Calaveras County APCD.
(v) Tuolumne County APCD.
(vi) San Joaquin County APCD.
(vii) Mariposa County APCD.
(viii) Tulare County APCD.
(ix) Kern County APCD.
(x) Madera County APCD.
(xi) Yolo-Solano APCD.
(xii) Sutter County APCD.
(xiii) Glenn County APCD.
(xiv) Tehama County APCD.
(xv) Sierra County APCD.
(xvi) Shasta County APCD.
(xvii) Sacramento County APCD.
(xviii)–(xix) [Reserved]
(xx) Lake County APCD.
(xxi) Imperial County APCD.
(xxii) [Reserved]
(xxiii) Ventura County APCD.
(xxiv) Monterey Bay Unified APCD.
(xxv) [Reserved]
(xxvi) San Luis Obispo County APCD.
(xxvii) Kings County APCD.
(xxviii) Plumas County APCD.
(xxix) Nevada County APCD.

(b) *Regulation for public availability of emission data.* (1) Any person who cannot obtain emission data from the Agency responsible for making emission data available to the public, as specified in the applicable plan, except for those APCD's specified in paragraph (a) of this section, concerning emissions from any source subject to emission limitations which are part of the approved plan may request that the appropriate Regional Administrator obtain and make public such data. Within 30 days after receipt of any such written request, the Regional Administrator shall require the owner or operator of any such source to submit information within 30 days on the nature and amounts of emissions from such source and any other information as may be deemed necessary by the Regional Administrator to determine whether such source is in compliance with applicable emission limitations or other control measures that are part of the applicable plan.

(2) Commencing after the initial notification by the Regional Administrator pursuant to paragraph (b)(1) of this section, the owner or operator of the source shall maintain records of the nature and amounts of emissions from such source and any other information as may be deemed necessary by the Regional Administrator to determine whether such source is in compliance with applicable emission limitations or other control measures that are part of the plan. The information recorded shall be summarized and reported to the Regional Administrator, on forms furnished by the Regional Administrator, and shall be submitted within 45 days after the end of the reporting period. Reporting periods are January 1 to June 30 and July 1 to December 31.

(3) Information recorded by the owner or operator and copies of this summarizing report submitted to the Regional Administrator shall be retained by the owner or operator for 2 years after the date on which the pertinent report is submitted.

(4) Emission data obtained from owners or operators of stationary sources will be correlated with applicable emission limitations and other control measures that are part of the applicable plan and will be available at the appropriate regional office and at other locations in the state designated by the Regional Administrator.

(c) The deletion of the following rules or portions of rules is disapproved, since these regulations are necessary to fulfill the requirements of 40 CFR 51.116(c).

(1) Northcoast intrastate region:

(i) Lake County APCD.

(A) Section 49a, *Public Records,* and Section 49b, *Record,* of Part III, *Definitions;* and Part II, *Authorization and Disclosure,* submitted on October 23, 1974 and previously approved under 40 CFR 52.223, are retained.

[40 FR 55328, Nov. 28, 1975]

EDITORIAL NOTE: For FEDERAL REGISTER citations affecting § 52.224, see the List of CFR Sections Affected in the Finding Aids section of this volume.

§ 52.225 Legal authority.

(a) The requirements of § 51.230(c) of this chapter are not met since the State Emergency Services Act does not apply to air pollution emergencies in a manner comparable to section 303 of the Clean Air Act, as amended.

(b) The requirements of § 51.230(f) of this chapter are not met since authority to make emission data available to the public inadequate. Such release is precluded under certain circumstances.

[37 FR 10852, May 31, 1972, as amended at 51 FR 40676, Nov. 7, 1986]

§ 52.226 Control strategy and regulations: Particulate matter, San Joaquin Valley and Mountain Counties Intrastate Regions.

(a) [Reserved]

(b) The following regulatory changes represent a relaxation of previously submitted regulations and an adequate control strategy has not been submitted showing that the relaxation will not interfere with attainment and maintenance of the National Ambient Air Quality Standards for particulate matter:

(1) Kings County APCD.

(i) Rule 405, Process Weight, submitted on July 25, 1973 is disapproved; and Rule 405, submitted on June 30, 1972, and previously approved in 40 CFR 52.223 is retained.

(ii) Rule 407.1, *Disposal of Solid and Liquid Wastes,* submitted on November 4, 1977, is disapproved; and Rule 407.1, *Disposal of Solid and Liquid Wastes,* submitted on June 30, 1972, and previously approved under 40 CFR 52.223 is retained.

(2) Calaveras County APCD.

(i) The revocation of Rule 407(b), Combustion Contaminants, is disapproved; and Rule 407(b), submitted on June 30, 1972, and previously approved in 40 CFR 52.223 is retained.

(ii) The revocation of Rule 408, Fuel Burning Equipment, is disapproved; and Rule 408, submitted on June 30, 1972, and previously approved in 40 CFR 52.223 is retained.

(iii) The addition of Rule 209, Fossil Fuel-Steam Generator Facility, is disapproved; and Rule 408, submitted on June 30, 1972 and previously approved in 40 CFR 52.223 is retained.

(3) Tuolumne County APCD.

(i) Rule 207, Particulate Matter, submitted on July 22, 1975, is disapproved; and Rules 404 and 407(b), submitted on June 30, 1972 and previously approved in 40 CFR 52.223 are retained.

(ii) Rule 209, Fossil Fuel-Steam Generator Facility, submitted on July 22, 1975, is disapproved; and Rule 408, submitted on June 30, 1972, and previously approved in 40 CFR 52.223 is retained.

(iii) Rule 207, Particulate Matter, submitted on February 10, 1977, is disapproved and the previously approved Rules 404 and 407(b), submitted on June 30, 1972, remain in effect.

(iv) Rule 209, Fossil Fuel-Steam Generator Facility, submitted on February 10, 1977, is disapproved and the previously approved Rule 408, submitted on June 30, 1972, remains in effect.

(4) Fresno County APCD.

(i) Rule 407, Disposal of Solid or Liquid Wastes, submitted on February 10, 1976, is disapproved; and Rule 407.1, submitted on June 30, 1972, and previously approved in 40 CFR 52.223 is retained.

(ii) Rule 407, Disposal of Solid or Liquid Wastes, submitted on November 10, 1976, is disapproved; and Rule 407.1, submitted on June 30, 1972 and previously approved in 40 CFR 52.223 is retained.

(5) San Joaquin County APCD.

(i) Rule 407.1, Disposal of Solid or Liquid Wastes, submitted on February 10, 1976, is disapproved; and Rule 407.1, submitted on June 30, 1972 and previously approved in 40 CFR 52.223 is retained.

(6) Mariposa County APCD.

(i) Rule 209, Fossil Fuel-Steam Generator Facility, submitted on January 10, 1975, is disapproved; and Rule 6.4, submitted on June 30, 1972 and previously approved in 40 CFR 52.223 is retained.

(7) Kern County APCD.

(i) Rule 407.1, Disposal of Solid or Liquid Wastes, submitted on July 22, 1975, is disapproved; and Rule 407.1, submitted on June 30, 1972 and previously approved in 40 CFR 52.223 is retained.

(8) Madera County APCD.

(i) Rule 405, Process Weight, submitted on January 10, 1975 is disapproved; and Rule 405, submitted on June 30, 1972 and previously approved in 40 CFR 52.223 is retained.

(9) Tulare County APCD.

(i) Paragraph b. of Rule 407.1.

(10) Merced County APCD.

(i) Rule 407.1, Disposal of Solid or Liquid Wastes, submitted on August 2, 1976 is disapproved; and Rule 407.1 submitted on June 30, 1972 and previously approved in 40 CFR 52.223 is retained.

[37 FR 10850, May 31, 1972]

EDITORIAL NOTE: For FEDERAL REGISTER citations affecting §52.226, see the List of CFR Sections Affected in the Finding Aids section of this volume.

§52.227 Control strategy and regulations: Particulate matter, Metropolitan Los Angeles Intrastate Region.

(a) The requirements of Subpart G of this chapter are not met since the plan does not provide for attainment and maintenance of the secondary standards for particulate matter in the Metropolitan Los Angeles Intrastate Region.

(b) The following regulations are disapproved since they are not part of the approved control strategy and do not provide for the degree of control needed for the attainment and maintenance of the primary standards for particulate matter in the Metropolitan Los Angeles Intrastate Region.

(1) Los Angeles County Air Pollution Control District:

(i) Regulation IV, Rule 68.1.

(2) Riverside County Air Pollution Control District:

(i) Regulation IV, Rule 54 for process sources with a process weight rate in excess of 62,000 lbs. per hour. Rule 54 is approved for process sources with a process weight of 62,000 lbs. per hour or less.

(3) Southern California APCD:

(i) Regulation IV, Rule 404 Particulate Matter—Concentration, submitted on August 2, 1976.

(ii) Regulation IV, Rule 473 Disposal of Solid and Liquid Wastes, submitted on August 2, 1976.

(4) South Coast AQMD.

(i) Rule 401(b) submitted on August 15, 1980.

(c) The rescission by the Southern California APCD of the following rules, which were previously approved in the May 31, 1972 (37 FR 10850) and September 22, 1972 (37 FR 19813) FEDERAL REGISTER issues, is disapproved since adequate replacementrules have not been submitted and no analysis has been presented to show that this rescission will not interfere with the attainment and maintenance of the NAAQS for particulate matter as required by section 110 of the Clean Air Act. In addition, the following rules, as submitted in June 1972 and approved for the SIP, remain federally enforceable:

(1) Los Angeles County APCD.

(i) Regulation IV, Rule 52 Particulate Matter—Concentration.

(ii) Regulation IV, Rule 58 Disposal of Solid and Liquid Wastes.

(2) San Bernardino County APCD.

(i) Regulation IV, Rule 52A Particulate Matter—Concentration.

(ii) Regulation IV, Rule 58A Disposal of Solid and Liquid Wastes.

(3) Riverside County APCD.

(i) Regulation IV, Rule 52 Particulate Matter—Concentration.

(ii) Regulation IV, Rule 58 Disposal of Solid and Liquid Wastes.

(4) Orange County APCD.

(i) Regulation IV, Rule 52 Particulate Matter—Concentration.

(ii) Regulation IV, Rule 58 Disposal of Solid and Liquid Wastes.

[37 FR 10850, May 31, 1972, as amended at 37 FR 19813, Sept. 22, 1972; 43 FR 25687, June 14, 1978; 49 FR 18824, May 3, 1984; 51 FR 40676, Nov. 7, 1986]

§52.228 Regulations: Particulate matter, Southeast Desert Intrastate Region.

(a) The following regulations are disapproved since they are not part of the approved control strategy and do not provide for the degree of control needed for the attainment and maintenance of the national standards for particulate matter in the Southeast Desert Intrastate Region.

(1) Imperial County Air Pollution Control District:

(i) Rule 114A.

(ii) Rule 116B.

(2) Los Angeles County Air Pollution Control District:

(i) Regulation IV, Rule 68.1.

(3) Riverside County Air Pollution Control District:

(i) Regulation IV, Rule 54 for process sources with a process weight rate in excess of 160,000 lbs. per hour. Rule 54 is approved for process sources with a process weight of 160,000 lbs. per hour or less.

(b) The following regulatory changes represent a relaxation of previously submitted regulations, and an adequate control strategy has not been submitted showing that the relaxation will not interfere with the attainment and maintenance of the national ambient air quality standards for particulate matter:

(1) Southeast Desert Intrastate Region:

(i) Imperial County APCD.

(A) Rule 406, Disposal of Solid and Liquid Wastes submitted on November 4, 1977 is disapproved; and Rule 116 C, Specific Contaminants submitted on June 30, 1972 and previously approved under 40 CFR 52.223 is retained.

(ii) Los Angeles County Air Pollution Control District.

(A) Regulation IV, Rule 404 Particulate Matter-Concentration, and Rule 473, Disposal of Solid and Liquid Wastes, submitted on June 6, 1977 are disapproved. Rules 52 and 58, titled as above, respectively, and submitted on June 30, 1972 and previouslyapproved under 40 CFR 52.223 are retained.

(iii) Riverside County Air Pollution Control District.

(A) Regulation IV, Rules 404 Particulate Matter-Concentration, 405 Particulate Matter-Weight, and Rule 473, Disposal of Solid and Liquid Wastes, submitted on June 6, 1977 are disapproved. Rules 52, Particulate Matter-Weight, 54, Dust and Fumes, and 58, Disposal of Solid and Liquid Wastes, submitted in 1972 and approved under 40 CFR 52.223, are retained.

(iv) The repeal of San Bernardino County APCD Regulation VI, Orchard or Citrus Grove Heaters, submitted on June 6, 1977, is disapproved. This regulation (comprised of Rules 101 to 104, 109, 110, 120, and 130 to 137), submitted on February 21, 1972 and approved under 40 CFR 52.223, is retained as part of the SIP.

[37 FR 10850, May 31, 1972, as amended at 37 FR 19813, Sept. 22, 1972; 43 FR 35695, Aug. 11, 1978; 43 FR 40014, Sept. 8, 1978]

§ 52.229 Control strategy and regulations: Photochemical oxidants (hydrocarbons), Metropolitan Los Angeles Intrastate Region.

(a) [Reserved]

(b) The following rules are disapproved because they would result in a relaxation of control requirements contained in the presently approved State Implementation Plan, and no analysis has been presented to show that this relaxation will not interfere with the attainment and maintenance of NAAQS for photochemical oxidants (hydrocarbons) as required by section 110 of the Clean Air Act.

(1) Southern California APCD.

(i) Regulation IV, Rule 465 Vacuum Producing Devices or Systems, submitted on August 2, 1976.

(2) South Coast Air Quality Management District.

(i) Regulation IV, Rule 461 Gasoline Transfer and Dispensing, submitted on June 6, 1977. The version of this rule by the same number and title submitted on April 21, 1976 and approved under 40 CFR 52.223 is retained.

(ii) Rule 1115, Automotive Coatings, adopted on March 16, 1984 by the District and submitted by the state to EPA on July 10, 1984.

(iii) Rule 1113, Architectural Coatings, adopted on August 2, 1985 and submitted to EPA on November 12, 1985. The version of this rule by the same number and title submitted on July 10, 1984 and approved by EPA on January 24, 1985 is retained.

(c) The rescission by the Southern California APCD of the following rules, which were previously approved in the September 22, 1972 (37 FR 19813) FEDERAL REGISTER issue, is disapproved since adequate replacement rules have not been submitted anderfere with the attainment and maintenance of the NAAQS for photochemical oxidants (hydrocarbons) as required by section 110 of the Clean Air Act. In addition,

the following rules, as submitted in June 1972 and approved for the SIP, remain federally enforceable:

(1) Los Angeles County APCD, Regulation IV, Rule 69, Vacuum Producing Devices or Systems.

(2) San Bernardino County APCD, Regulation IV, Rule 69, Vacuum Producing Devices or Systems.

(3) Riverside County APCD, Regulation IV, Rule 74, Vacuum Producing Devices or Systems.

(4) Orange County APCD, Regulation IV, Rule 69, Vacuum Producing Devices or Systems.

[37 FR 10850, May 31, 1972, as amended at 43 FR 25687, June 14, 1978; 43 FR 40014, Sept. 8, 1978; 46 FR 5978, Jan. 21, 1981; 54 FR 5237, Feb. 2, 1989; 54 FR 34515, Aug. 21, 1989]

§52.230 Control strategy and regulations: Nitrogen dioxide.

(a) The requirements of §52.14(c)(3) of this chapter as of September 22, 1972 (47 FR 1983), are not met since the plan does not provide for the degree of nitrogen oxides emission reduction attainable through application of reasonably available control technology in the Metropolitan Los Angeles Intrastate Region. Therefore, Rule 68.b of the Orange County Air Pollution Control District is disapproved.

(b) The following rules are disapproved since they are not part of the approved control strategy and do not provide for the degree of control necessary for the attainment and maintenance of NAAQS for nitrogen dioxide in the Metropolitan Los Angeles Intrastate AQCR:

(1) Orange County APCD, Regulation IV, Rule 474, Fuel Burning Equipment—Oxides of Nitrogen, submitted on February 10, 1977.

(c) The rescission by the Southern California APCD of the following rules is disapproved since adequate replacement rules have not been submitted and no analysis has been presented to show that this rescission will not interfere with the attainment and maintenance of the National Ambient Air Quality Standards as required by section 110 of the Clean Air Act. In addition, the following rules, as submitted in June 1972 and approved for the SIP, remain federally enforceable:

(1) Orange County APCD, Regulation IV, Rule 68, Fuel Burning Equipment—NOx.

(2) Orange County APCD, Regulation IV, Rule 67.1, Fuel Burning Equipment.

[43 FR 25687, June 14, 1978, as amended at 46 FR 3884, Jan. 16, 1981; 51 FR 40677, Nov. 7, 1986]

§52.231 Regulations: Sulfur oxides.

(a) [Reserved]

(b) The deletion of the following rules or portions of rules is disapproved, since an adequate control strategy demonstration has not been submitted indicating that the deletions of the control requirements contained in those rules would not interfere with the attainment or maintenance of the National Ambient Air Quality Standard for Sulfur Oxides.

(1) Lake County Intrastate Region.

(i) Lake County, APCD.

(A) Section 3(F), *Sulfur* of Part V, *Prohibitions and Standards,* submitted on October 23, 1974 and previously approved under 40 CFR 52.223, is retained as applicable to sources other than sulfur recovery units.

[43 FR 34464, 34466, Aug. 4, 1978, as amended at 46 FR 3884, Jan. 16, 1981; 46 FR 42461, Aug. 21, 1981]

§52.232 Part D conditional approval.

(a) The following portions of the California SIP contain deficiencies with respect to Part D of the Clean Air Act which must be corrected by meeting the indicated conditions of Part D plan approval.

(1) Imperial County for ozone.

(i) By May 7, 1981, the NSR rules must be revised and submitted as an SIP revision. The rules must satisfy section 173 and 40 CFR Subpart I, ''Review of new sources and modifications.''

In revising the Imperial County APCD's NSR rules, the State/APCD must address (A) any new requirements in EPA's amended regulations for NSR under section 173 of the Clean Air Act (August 7, 1980, 45 FR 52676) which the APCD rules do not now satisfy and (B) those deficiencies cited in EPA's Evaluation Report Addendum (contained in Document File NAP–CA–06 at the EPA

Library in Washington, DC and the Region IX office).

(ii) By January 1, 1981, a cutback asphalt rule which reflects reasonably available control technology (RACT) must be submitted as an SIP revision.

(2) North Central Coast Air Basin for ozone.

(i) By May 7, 1981, the NSR rules must be revised and submitted as an SIP revision. The rules must satisfy section 173 and 40 CFR 51.18, ''Review of new sources and modifications.'' In revising the Monterey Bay Unified APCD's NSR rules, the State/APCD must address (*a*) any new requirements in EPA's amended regulations for NSR under section 173 of the Clean Air Act (August 7, 1980, 45 FR 52676) which the APCD rules do not now satisfy and (*b*) those deficiencies with respect to the September 5, 1979 notice cited in EPA's Evaluation Report Addendum (contained in Document File NAP–CA–14 at the EPA Library in Washington, DC and the Region IX office).

(ii) By March 4, 1981, one of the following must be submitted as an SIP revision: (*a*) Adequate justification that the cutback asphalt rule represents RACT, (*b*) amendment of the cutback asphalt rule to conform with the controls recommended in the CTG document for cutback asphalt, or (*c*) adequate documentation that the cutback asphalt rule will result in emission reductions which are within 5 percent of the reductions achievable with the controls recommended in the cutback asphalt CTG document.

(3) South Coast Air Basin.

(i)(A) By May 7, 1981, the NSR rules must be revised and submitted as an SIP revision. The rules must satisfy section 173 of the Clean Air Act and 40 CFR 51.18, ''Review of new sources and modifications.'' In revising the South Coast AQMD's NSR rules, the State/AQMD must address (*1*) any new requirements in EPA's amended regulations for NSR (45 FR 31307, May 13, 1980 and 45 FR 52676, August 7, 1980) which the AQMD rules do not currently satisfy and (*2*) those deficiencies cited in EPA's Evaluation Report Addendum which still apply despite EPA's new NSR requirements (contained in Document File NAP–CA–9 at the EPA Library in Washington, DC and the Regional Office).

(4) San Diego Air Basin.

(i) For ozone, CO, TSP, and NO_2:

(A) By May 7, 1981, the NSR rules submitted on March 17, 1980 must be revised and submitted as an SIP revision. In revising the NSR rules, the State/APCD must address (*1*) any new requirements in EPA's amended regulations for NSR under section 173 of the Clean Air Act (May 13, 1980, 45 FR 31307; and August 7, 1980, 45 FR 52676) which the APCD rules do not currently satisfy and (*2*) the deficiencies cited in EPA's *Evaluation Report Addendum* which still apply despite EPA's new NSR requirements. The *Evaluation Report Addendum* is contained in document file NAP–CA–19 and available at the EPA Region IX Office and the EPA Library in Washington, DC

(5) The Kern County APCD.

(i) For ozone, CO, and PM:

(A) By November 19, 1981, the NSR rules must be revised and submitted as an SIP revision. The rules must satisfy section 173 of the Clean Air Act and 40 CFR Subpart I, ''Review of new sources and modification.'' In revising Kern County's NSR rules, the State/APCD must address all the requirements in EPA's amended regulations for NSR (45 FR 31307, May 13, 1980 and 45 FR 52676, August 7, 1980) which the APCD rules do not currently satisfy including those deficiencies cited in EPA's Evaluation Report Addendum which still apply despite EPA's new NSR requirements (contained in Document File NAP–CA–07 at the EPA Library in Washington, DC and the Regional Office).

(ii) [Reserved]

(6) The San Joaquin Valley Air Basin Nonattainment Area.

(i) For O_3, PM and CO in San Joaquin County.

(A) By October 30, 1985 the NSR rules must be revised to meet the requirements in EPA's amended regulations for NSR under section 173 of the Clean Air Act (May 13, 1980 (45 FR 31307) and August 7, 1980 (45 FR 52676)) and submitted as a SIP revision.

(7) San Francisco Bay Area Air Basin.

(i) For ozone and CO:

(A) By June 17, 1982, submittal of implementation commitments and schedules and additional commitments to provide annually the financial and personnel resources necessary to carry out the plan for transportation sources.

(8) [Reserved]

(9) The Santa Barbara County nonattainment areas.

(i) For O_3, TSP, and CO by (90 days from the date of publication of this notice).

(A) The new source review (NSR) rules must be revised to meet the requirements in EPA's amended regulations for NSR under section 173 of the Clean Air Act (45 FR 31307, May 13, 1980 and 45 FR 52676, August 7, 1980) and submitted as an SIP revision.

(ii) For O_3 by (90 days from the date of publication of this notice), a revised cutback asphalt paving materials rule which does not allow for indefinite compliance date extensions and submitted as an SIP revision.

(10) Kings, Madera, Merced, Stanislaus and Tulare County APCDs.

(i) For O_3 and PM [and CO in Stanislaus County].

(A) By September 7, 1982 the NSR rules must be revised to meet the requirements in EPA's amended regulations for NSR under section 173 of the Clean Air Act (May 13, 1980, 45 FR 31307 and August 7, 1980, 45 FR 52676) as an SIP revision.

(11) Fresno County and Ventura County nonattainment areas.

(i) For ozone, CO (for Fresno County), and PM:

(A) By November 1, 1982, the NSR rules must be revised to meet the requirements in EPA's amended regulations for NSR under section 173 of the Clean Air Act (May 13, 1980 (45 FR 31307), August 7, 1980 (45 FR 52676), and October 14, 1981 (46 FR 50766)).

(12) Butte, Sutter and Yuba County APCDs.

(i) For Ozone:

(A) By August 2, 1982, the NSR rules for the counties discussed in this notice must be revised to meet the requirements in EPA's amended regulations for NSR under section 173 of the Clean Air Act (May 13, 1980, 45 FR 31307 and August 7, 1980, 45 FR 52676).

(13) Los Angeles and Riverside portions of the Southeast Desert Air Basin.

(i) For Ozone:

(A) By August 9, 1982, the new source review rules for the three county areas must be revised to meet the requirements in EPA's amended regulations under section 173 (May 13, 1980, (45 FR 31307), August 7, 1980, (45 FR 52676), and October 14, 1981, (46 FR 50766)).

(B) By August 9, 1982, the State must provide adopted regulations for degreasing operations in the Los Angeles County portion of the SEDAB which represent RACT.

(14) [Reserved]

(15) Mountain Counties Air Basin.

(i) By October 30, 1985 the new source review rules for Placer and El Dorado Counties must be revised to meet the requirements in EPA's amended regulations under section 173 of the Clean Air Act (May 13, 1980 (45 FR 31307), August 7, 1980 (45 FR 52676), and October 14, 1981 (46 FR 50766)).

(16) San Bernardino County portion of the Southeast Desert Air Basin.

(i) For ozone:

(A) By October 30, 1985, the NSR rules must be revised to meet the requirements in EPA's amended regulations for NSR under section 173 of the Clean Air Act (May 13, 1980 (45 FR 31307), August 7, 1980 (45 FR 52676), and October 14, 1981 (46 FR 50766)).

(17) Yolo and Solano Counties.

(i) For ozone and CO in those portions of Yolo and Solano Counties that are part of the Sacramento Metropolitan Area:

(A) By October 30, 1985, the NSR rules must be revised to meet the requirements in EPA's amended regulations for NSR under section 173 of the Clean Air Act (May 13, 1980 (45 FR 31307), August 7, 1980 (45 FR 52676), and October 14, 1981 (46 FR 50766)).

(ii) For ozone:

By November 1, 1982, the State must provide either (A) an adequate demonstration that the following regulations represent RACT, (B) amend the regulations so that they are consistent with the CTG, or (C) demonstrate that the regulations will result in VOC emission reductions which are within five percent of the reductions which

would be achieved through the implementation of the CTG recommendations:

Yolo-Solano County APCD

Rule 2.24, ''Solvent Cleaning Operations (Degreasing).''

[45 FR 74485, Nov. 10, 1980]

EDITORIAL NOTE: For FEDERAL REGISTER citations affecting § 52.232, see the List of CFR Sections Affected in the Finding Aids section of this volume.

§ 52.233 Review of new sources and modifications.

(a) The following regulations are disapproved because they are not consistent with Clean Air Act requirements.

(1) Imperial County APCD.

(i) Subparagraph C.5. of Rule 207, *Standards for Permit to Construct*, submitted March 17, 1980.

(2) Monterey Bay Unified APCD.

(i) Subparagraph B.5. of Rule 207, *Standards for Permit to Construct*, submitted March 17, 1980.

(3) South Coast AQMD.

(i) In Rule 1306(a)(i), submitted on April 3, 1980, sentence 3 is disapproved.

(ii) In Rule 1306(d)(1)(B)(ii), submitted on April 3, 1980, the following portion of the rule is disapproved: ''Which have occurred during the highest three years of the last five year period, divided by three, provided the applicant demonstrates that such permit units have been operated at least 90 days during each of such three years.''

(iii) In Rule 1307(a) submitted on April 3, 1980, the following portion of the rule is disapproved: ''Greater than 68 kilograms (150 pounds) per day except carbon monoxide, for which the value is an increase greater than 340 kilograms (750 pounds) per day.''

(4) Kern County APCD.

(i) Those portions of paragraph (3)(E) of Rule 210.1, submitted on April 15, 1980, which allow new sources and modifications to be exempt from LAER.

(b) [Reserved]

(c) The requirements of § 51.160(a) of this chapter are not met in the following Air Pollution Control Districts since the regulations of the APCD's do not provide the means to prevent construction of sources which would violate applicable portions of the control strategy or would interfere with the attainment or maintenance of a national standard.

(1) Mariposa County APCD.

(2) Santa Barbara County APCD.

(d) The requirements of § 51.160(a) of this chapter are not met in the following Air Pollution Control Districts since the regulations of the APCD's do not include a means to prevent construction or modification if such construction or modification would interfere with the attainment or maintenance of a national standard.

(1) Amador County APCD.

(2) Calaveras County APCD.

(3) El Dorado County APCD (Mountain Counties Intrastate portion).

(4) [Reserved]

(5) Glenn County APCD.

(6) Humboldt County APCD.

(7)–(8) [Reserved]

(9) Lake County APCD.

(10) Lassen County APCD.

(11) [Reserved]

(12) Mendocino County APCD.

(13) [Reserved]

(14) Modoc County APCD.

(15) Monterey Bay Unified APCD.

(16) Nevada County APCD.

(17) Northern Sonoma County APCD.

(18) [Reserved]

(19) Plumas County APCD.

(20) [Reserved]

(21) Shasta County APCD.

(22) Sierra County APCD.

(23) Siskiyou County APCD.

(24) [Reserved]

(25) Sutter County APCD.

(26) [Reserved]

(27) Tuolumne County APCD.

(e) [Reserved]

(f) *Regulation for review of new sources and modifications.* (1) The requirements of this paragraph are applicable to:

(i) Any stationary source in the APCD's listed below, the construction or modification of which is commenced after the effective date of this regulation.

(*a*) Mariposa County APCD.

(*b*) [Reserved]

(*c*) Santa Barbara County APCD.

(ii) Any stationary source subject to the requirements of §§ 52.226(c), 52.227(c), 52.228(b), or 52.230(b), the construction or modification of which is commenced after the effective date of this regulation.

(2) No owner or operator shall commence construction or modification of a stationary source after the effective date of this regulation without first obtaining approval from the Administrator of the location and design of such source.

(i) Application for approval to construct or modify shall be made on forms furnished by the Administrator, or by other means prescribed by the Administrator.

(ii) A separate application is required for each source.

(iii) Each application shall be signed by the applicant.

(iv) Each application shall be accompanied by site information, plans, descriptions, specifications, and drawings showing the design of the source, the nature and amount of emissions, and the manner in which it will be operated and controlled.

(v) Any additional information, plans, specifications, evidence, or documentation that the Administrator may require shall be furnished upon request.

(3) No approval to construct or modify will be granted unless the applicant shows to the satisfaction of the Administrator that:

(i) The source will be operated without causing a violation of any local, State, or Federal regulations which are part of the applicable plan.

(ii) The source will not prevent or interfere with attainment or maintenance of any national standard.

(4) (i) Within twenty (20) days after receipt of an application to construct, or any addition to such application, the Administrator shall advise the owner or operator of any deficiency in the information submitted in support of the application. In the event of such a deficiency, the date of receipt of the application for the purpose of paragraph (f)(4)(ii) of this section, shall be the date on which all required information is received by the Administrator.

(ii) Within thirty (30) days after receipt of a complete application, the Administrator shall:

(*a*) Make a preliminary determination whether the source should be approved, approved with conditions, or disapproved.

(*b*) Make available in at least one location in each region in which the proposed source would be constructed, a copy of all materials submitted by the owner or operator, a copy of the Administrator's preliminary determination and a copy or summary of other materials, if any, considered by the Administrator in making his preliminary determination; and

(*c*) Notify the public, by prominent advertisement in a newspaper of general circulation in each region in which the proposed source would be constructed, of the opportunity for written public comment on the information submitted by the owner or operator and the Administrator's preliminary determination on the approvability of the source.

(iii) A copy of the notice required pursuant to this paragraph shall be sent to the applicant and to state and local air pollution control agencies, having cognizance over the location where the source will be situated.

(iv) Public comments submitted in writing within thirty (30) days after the date such information is made available shall be considered by the Administrator in making his final decision on the application. No later than ten (10) days after the close of the public comment period, the applicant may submit a written response to any comment submitted by the public. The Administrator shall consider the applicant's response in making his final decision. All comments shall be made available for public inspection in at least one location in the region in which the source would be located.

(v) The Administrator shall take final action on the application within thirty (30) days after the close of the public comment period. The Administrator shall notify the applicant in writing of his approval, conditional approval, or denial of the application, and shall set forth his reasons for ocnditional approval or denial. Such notification shall be made available for public inspection in at least one location in the region in which the source would be located.

(vi) The Administrator may extend each of the time periods specified in paragraph (f)(4)(ii), (iv) or (v) of this section by no more than 30 days, or such other period as agreed to by the applicant and the Administrator.

(5) The Administrator may impose any reasonable conditions upon an approval, including conditions requiring the source to be provided with:

(i) Sampling ports of a size, number, and location as the Administrator may require,

(ii) Safe access to each port,

(iii) Instrumentation to monitor and record emission data, and

(iv) Any other sampling and testing facilities.

(6) The Administrator may cancel an approval if the construction is not begun within 2 years from the date of issuance, or if during the construction, work is suspended for 1 year.

(7) Any owner or operator subject to the provisions of this regulation shall furnish the Administrator written notification as follows:

(i) A notification of the anticipated date or initial startup of the source not more than 60 days or less than 30 days prior to such date.

(ii) A notification of the actual date of initial startup of the source within 15 days after such date.

(8) Within 60 days after achieving the maximum production rate at which the source will be operated but not later than 180 days after initial startup of such source the owner or operator of such source shall conduct a performance test(s) in accordance with methods and under operating conditions approved by the Administrator and furnish the Administrator a written report of the results of such performance test.

(i) Such test shall be at the expense of the owner or operator.

(ii) The Administrator may monitor such test and may also conduct performance tests.

(iii) The owner or operator of a source shall provide the Administrator 15 days prior notice of the performance test to afford the Administrator the opportunity to have an observer present.

(iv) The Administrator may waive the requirement for performance tests if the owner or operator of a source has demonstrated by other means to the Administrator's satisfaction that the source is being operated in compliance with all local, State and Federal regulations which are part of the applicable plan.

(9) Approval to construct or modify shall not be required for:

(i) The installation or alteration of an air pollutant detector, air pollutants recorder, combustion controller, or combustion shutoff.

(ii) Air-conditioning or ventilating systems not designed to remove air pollutants generated by or released from equipment.

(iii) Fuel burning equipment, other than smokehouse generators which has a heat input of not more than 250 MBtu/h (62.5 billion g-cal/h) and burns only gaseous fuel containing not more than 0.5 grain H_2S per 100 stdft^3 (5.7 g/100 stdm^3); has a heat input of not more than 1 MBtu/h (250 Mg-cal/h) and burns only distillate oil; or has a heat input of not more than 350,000 Btu/h (88.2 Mg-cal/h) and burns any other fuel.

(iv) Mobile internal combustion engines.

(v) Laboratory equipment used exclusively for chemical or physical analyses.

(vi) Other sources of minor significance specified by the Administrator.

(10) Approval to construct or modify shall not relieve any person of the responsibility to comply with any local, State, or Federal regulation which is part of the applicable plan.

(11) Any owner or operator who constructs, modifies, or operates a stationary source not in accordance with the application, as approved and conditioned by the Administrator, or any owner or operator of a stationary source subject to this paragraph who commences construction or modification without applying for any receiving approval hereunder, shall be subject to enforcement action under section 113 of the Act.

(g) *Regulation for review of new sources and modifications.* (1) The requirements of this paragraph are applicable to any stationary source in the APCD's listed below, the construction or modification of which is commenced after the effective date of this regulation.

(i) Amador County APCD.

(ii) Calaveras County APCD.

(iii) El Dorado County APCD (Mountain Counties Intrastate portion).

(iv) [Reserved]
(v) Glenn County APCD.
(vi) Humboldt County APCD.
(vii)–(viii) [Reserved]
(ix) Lassen County APCD.
(x) Madera County APCD.
(xi) Mendocino County APCD.
(xii) Merced County APCD.
(xiii) Modoc County APCD.
(xiv) Monterey Bay Unified APCD.
(xv) Nevada County APCD.
(xvi) [Reserved]
(xvii) Plumas County APCD.
(xviii) San Joaquin County APCD.
(xix) Shasta County APCD.
(xx) Sierra County APCD.
(xxi) Siskiyou County APCD.
(xxii) Stanislaus County APCD.
(xxiii) Sutter County APCD.
(xxiv) Tulare County APCD.
(xxv) Tuolumne County APCD.

(2) No owner or operator shall commence construction or modification of any new source after the effective date of this regulation without first obtaining approval from the Administrator of the location of such source.

(i) Application for approval to construct or modify shall be made on forms furnished by the Administrator, or by other means prescribed by the Administrator.

(ii) A separate application is required for each source.

(iii) Each application shall be signed by the applicant.

(iv) Each application shall be accompanied by site information, stack data, and the nature and amount of emissions. Such information shall be sufficient to enable the Administrator to make any determination pursuant to paragraph (g)(3) of this section.

(v) Any additional information, plans, specifications, evidence, or documentation that the Administrator may require shall be furnished upon request.

(3) No approval to construct or modify will be granted unless the applicant shows to the satisfaction of the Administrator that the source will not prevent or interfere with attainment or maintenance of any national standard.

(4) (i) Within twenty (20) days after receipt of an application to construct, or any addition to such application, the Administrator shall advise the owner or operator of any deficiency in the information submitted in support of the application. In the event of such a deficiency, the date of receipt of the application for the purpose of paragraph (g)(4)(ii) of this section, shall be the date on which all required information is received by the Administrator.

(ii) Within thirty (30) days after receipt of a complete application, the Administrator shall:

(*a*) Make a preliminary determination whether the source should be approved, approved with conditions, or disapproved.

(*b*) Make available in at least one location in each region in which the proposed source would be constructed, a copy of all materials submitted by the owner or operator, a copy of the Administrator's preliminary determination and a copy or summary of other materials, if any, considered by the Administrator in making his preliminary determination; and

(*c*) Notify the public, by prominent advertisement in a newspaper of general circulation in each region in which the proposed source would be constructed, of the opportunity for written public comment on the information submitted by the owner or operator and the Administrator's preliminary determination on the approvability of the source.

(iii) A copy of the notice required pursuant to this subparagraph shall be sent to the applicant and to state and local air pollution control agencies, having cognizance over the location where the source will be situated.

(iv) Public comments submitted in writing within thirty (30) days after the date such information is made available shall be considered by the Administrator in making his final decision on the application. No later than ten (10) days after the close of the public comment period, the applicant may submit a written response to any comment submitted by the public. The Administrator shall consider the applicant's response in making his final decision. All comments shall be made available for public inspection in at least one location in the region in which the source would be located.

(v) The Administrator shall take final action on an application within thirty (30) days after the close of the

public comment period. The Administrator shall notify the applicant in writing of his approval, conditional approval, or denial of the application, and shall set forth his reasons for conditional approval or denial. Such notification shall be made available for public inspection in at least one location in the region in which the source would be located.

(vi) The Administrator may extend each of the time periods specified in paragraph (g)(4) (ii), (iv) or (v) of this section by no more than 30 days, or such other period as agreed to by the applicant and the Administrator.

(5) The Administrator may cancel an approval if the construction is not begun within 2 years from the date of issuance, or if during the construction, work is suspended for 1 year.

(6) Approval to construct or modify shall not relieve any owner or operator of the responsibility to comply with any local, State, or Federal regulation which is part of the applicable plan.

(7) Approval to construct or modify shall not be required for:

(i) The installation or alteration of an air pollutant detector, air pollutants recorder, combustion controller, or combustion shutoff.

(ii) Air-conditioning or ventilating systems not designed to remove air pollutants generated by or released from equipment.

(iii) Fuel burning equipment, other than smokehouse generators, which has a heat input of not more than 250 MBtu/h (62.5 billion g-cal/h) and burns only gaseous fuel containing not more than 20.0 grain H_2S per 100 stdft^3 (54.8 g/100 stdm^3); has a heat input of not more than 1 MBtu/h (250 Mg-cal/h) and burns only distillate oil; or has a heat input of not more than 350,000 Btu/h (88.2 Mg-cal/h) and burns any other fuel.

(iv) Mobile internal combustion engines.

(v) Laboratory equipment used exclusively for chemical or physical analyses.

(vi) Other sources of minor significance specified by the Administrator.

(8) Any owner or operator who constructs, modifies, or operates a stationary source not in accordance with the application, as approved and conditioned by the Administrator, or any owner or operator of a stationary source subject to this paragraph who commences construction or modification without applying for and receiving approval hereunder, shall be subject to enforcement action under section 113 of the Act.

(h)—(i) [Reserved]

(j) *Delegation of authority*. (1) The Administrator shall have the authority to delegate responsibility for implementing the procedures for conducting source review pursuant to this section in accordance with paragraphs (j) (2), (3), and (4) of this section.

(2) Where the Administrator delegates the responsibility for implementing the procedures for conducting source review pursuant to this section to any Agency, other than a Regional Office of the Environmental Protection Agency, a copy of the notice pursuant to paragraphs (f)(4)(iii) and (g)(4)(iii) of this section shall be sent to the Administrator through the appropriate Regional Office.

(3) In accordance with Executive Order 11752, the Administrator's authority for implementing the procedures for conducting source review pursuant to this section shall not be delegated, other than to a Regional Office of the Environmental Protection Ands; except that, with respect to the latter category, where new or modified sources are constructed or operated on Federal lands pursuant to leasing or other Federal agreements, the Federal Land Manager may at his discretion, to the extent permissible under applicable statutes and regulations, require the lessee or permittee to be subject to new source review requirements which have been delegated to a state or local agency pursuant to this paragraph.

(4) The Administrator's authority for implementing the procedures for conducting source review pursuant to this section shall not be redelegated, other than to a Regional Office of the Environmental Protection Agency, for new or modified sources which are located in Indian reservations except where the State has assumed jurisdiction over such land under other laws, in which case the Administrator may delegate

his authority to the States in accordance with paragraphs (j) (2), (3), and (4) of this section.

(k) *Conditions on steam production.* (1) Notwithstanding any provisions to the contrary in the California State Implementation Plan, the Watson petroleum refinery owned by Atlantic Richfield Company, located at 1801 East Sepulveda Boulevard, Carson, California, shall operate under the following conditions listed in paragraphs (k)(2) through (6) of this section.

(2) The total steam load comprised of the steam purchased from Watson Energy Systems and the amount generated by boilers #31, #32, #33, #42, #51, and #52 at the ARCO Watson Refinery shall not exceed 1,355,000 pounds per hour at 680°F, 600 psig.

(3) Continuous written records of steam purchased from Watson Energy Systems and of the steam produced by boilers #31, #32, #42, #51, or #52 at the ARCO Watson Refinery, during receipt of steam from Watson Energy Systems, shall be maintained and made available for inspection by the EPA and the South Coast Air Quality Management District. These records shall be kept in terms of pounds per hour of steam at 680°F, 600 psig.

(4) The steam purchased from the Watson Energy Systems facility shall be used as a ''first-on, last-off'' source of steam for the ARCO Watson Refinery, except for steam produced by waste heat or as part of the refining process, or as required to maintain fired boilers in service for emergency use.

(5) Any proposed changes in equipment or fuel that would increase the oil fired steam generating capacity or decrease oil fired steam generating efficiency of boilers #31, #32, #33, #42, #51, and #52 at the ARCO Watson Refinery must be reviewed and approved by the EPA prior to implementation of the proposed changes.

(6) ARCO shall maintain written records of oil consumption at boilers #31, #32, #33, #42, #51, and #52 during receipt of steam from Watson Energy Systems. These records shall be available for inspection by the South Coast Air Quality Management District and the EPA. The total oil consumption of these boilers shall not exceed a monthly average of 226,000 gallons per day when receiving steam from the Watson Energy systems plant at a rate of 350,000 pounds per hour. When receiving steam at a lower rate, ARCO shall be allowed to increase its boiler fuel oil consumption to achieve a total steam load not to exceed the limit of condition two (2).

(l) The following rules and regulations are disapproved because they do not meet the requirements of sections 110, 172, and 173 of the Clean Air Act, since they exempt certain source categories from the offset requirements of the Act:

(1) South Coast Air Quality Management District.

(i) Rule 1304(e), Resource Conservation and Energy Projects, submitted on April 3, 1980, but only with respect to projects whose application for a permit is complete after January 1, 1986,

(ii) Rule 1304(b)(2), Resource and Energy Conservation Projects, submitted on November 8, 1982, but only with respect to projects whose application for a permit is complete after January 1, 1986,

(m) Revised South Coast Regulation XIII, submitted on November 8, 1982, is not approved inasmuch as action on it is temporarily deferred.

[37 FR 19813, Sept. 22, 1972]

EDITORIAL NOTE: For FEDERAL REGISTER citations affecting §52.233, see the List of CFR Sections Affected in the Finding Aids section of this volume.

§52.234 Source surveillance.

(a) Except in the Air Pollution Control Districts (APCDs) listed in this paragraph, the requirements of §51.211 of this chapter are not met since the plan does not provide for recordkeeping and periodic reporting of emission data by sources.

(1) Amador County APCD.
(2) Bay Area AQMD.
(3) Calaveras County APCD.
(4) Del Norte County APCD.
(5) El Dorado County APCD.
(6) Humboldt County APCD.
(7) Imperial County APCD.
(8) Lake County APCD.
(9) Mariposa County APCD.
(10) Mendocino County APCD.
(11) Nevada County APCD.
(12) Northern Sonoma County APCD.

(13) Placer County APCD.
(14) Plumas County APCD.
(15) Sierra County APCD.
(16) Trinity County APCD.
(17) Ventura County APCD.

(b) The requirements of § 51.212 of this chapter are not met since the plan does not adequately provide for periodic testing and inspection of stationary sources within the Bay Area Air Pollution Control District portion of the San Francisco Bay Area Intrastate Region.

(c) The requirements of § 51.212 of this chapter are not met since the system for detecting violations through enforcement of visible emission regulations and complaint handling is not adequately described.

(d) *Regulation for source recordkeeping and reporting.* (1) The owner or operator of any stationary source in the State of California, except for those APCD's specified in paragraph (a) of this section, shall, upon notification from the Administrator, maintain records of the nature and amounts of emissions from such source and/or any other information as may be deemed necessary by the Administrator to determine whether such source is in compliance with applicable emission limitations or other control measures.

(2) The information recorded shall be summarized and reported to the Administrator, on forms furnished by the Administrator, and shall be submitted within 45 days after the end of the reporting period. Reporting periods are January 1 to June 30 and July 1 to December 31, except that the initial reporting period shall commence on the date the Administrator issues notification of the recordkeeping requirements.

(3) Information recorded by the owner or operator and copies of the summarizing reports submitted to the Administrator shall be retained by the owner or operator for 2 years after the date on which the pertinent report is submitted.

(e) The requirements of § 51.214 of this chapter are not met in the following air pollution control districts (APCD's) since all of the applicable requirements of Appendix P of part 51 are not included in the district regulations.

(1) Amador County APCD.
(2) Bay Area AQMD
(3) Calaveras County APCD.
(4) El Dorado County APCD.
(5) Imperial County APCD.
(6) Kern County APCD.
(7) Kings County APCD.
(8) Los Angeles County APCD.
(9) Mariposa County APCD.
(10) Monterey Bay Unified APCD.
(11) Nevada County APCD.
(12) Placer County APCD.
(13) Plumas County APCD.
(14) San Bernardino County Desert APCD.
(15) San Diego County APCD.
(16) San Joaquin County APCD.
(17) San Luis Obispo County APCD.
(18) Santa Barbara County APCD.
(19) Sierra County APCD.
(20) South Coast AQMD.
(21) Stanislaus County APCD.
(22) Tulare County APCD.
(23) Ventura County APCD.

[37 FR 10850, May 31, 1972]

EDITORIAL NOTE: For FEDERAL REGISTER citations affecting § 52.234, see the List of CFR Sections Affected in the Finding Aids section of this volume.

§ 52.235 Control strategy for ozone: Oxides of nitrogen.

EPA is approving an exemption request submitted by the Monterey Bay Unified Air Pollution Control District on April 26, 1994 for the Monterey Bay ozone nonattainment area from the NO_X RACT requirements contained in section 182(f) of the Clean Air Act. This approval exempts the area from implementing the oxides of nitrogen (NO_X) requirements for reasonably available control technology (RACT), new source review (NSR), the related requirements of general and transportation conformity regulations, and applicable inspection and maintenance (I/M). The exemption is based on ambient air monitoring data and lasts for only as long as the area's monitoring efforts continue to demonstrate attainment without NO_X reductions from major stationary sources.

[60 FR 20237, Apr. 25, 1995]

§ 52.236 Rules and regulations.

(a) Since the following Air Pollution Control District (APCD) rules do not

define the term ''agricultural operations,'' the rules are disapproved because they could render certain emission limitations rules unenforceable.

(1) Imperial County APCD.

(i) Rule 114.5, submitted on November 10, 1976.

(ii) Rule 148.D(3), submitted on November 10, 1976.

(b) The following Air Pollution Control District (APCD) rules are disapproved because they contain the term ''agricultural operations'' and/or the term ''other equipment in agricultural operations,'' both of which are either undefined or inadequately defined, thus rendering certain emission control rules unenforceable:

(1) San Luis Obispo County APCD.

(i) Rules 401(B)(4) and 401(B)(6), submitted on November 10, 1976.

(2) Sacramento County APCD.

(i) Rule 7(b)(5), submitted on November 4, 1977.

(3) Glenn County APCD.

(i) Section 77(e), submitted on June 30, 1972, and previously approved under 40 CFR 52.223 (37 FR 19812).

(4) Mariposa County APCD.

(i) Rule 203(G), submitted on June 6, 1977.

(5) Kern County APCD.

(i) Rules 402(c) and 402(e), submitted on; November 10, 1976.

(6) Fresno County APCD.

(i) Rules 402(c) and 402(e), submitted on October 23, 1974.

(ii) Rules 402(c) and 402(e), submitted on June 30, 1972, and previously approved under 40 CFR 52.223 (37 FR 19812).

(7) Tulare County APCD.

(i) Section 402(c), submitted on November 10, 1976, and previously approved under 40 CFR 52.223 (42 FR 47556).

(8) Madera County APCD.

(i) Rules 402(c) and 402(e), submitted on January 10, 1975, and previously approved under 40 CFR 52.223 (42 FR 42219).

(9) Amador County APCD.

(i) Rules 203(G), submitted on October 15, 1979, and 205(G), submitted on June 30, 1972.

(c) Since the following Air Pollution Control Districts have deleted definitions which could allow a relaxation of emission limitations, the deletions are disapproved:

(1) Merced County APCD.

(i) Rule 102(hh), submitted on June 30, 1972, previously approved under 40 CFR 52.223, and deleted by the August 2, 1976 submittal, is retained.

(2) El Dorado County APCD.

(i) Rule 102(LL), submitted on November 4, 1977, previously approved at 43 FR 51632, and deleted by the May 23, 1979 submittal, is retained.

(d) The following rules or portions of rules are disapproved since they contain provisions which are inconsistent with 40 CFR part 58, Ambient Air Quality Surveillance.

(1) Lake County APCD.

(i) Section 224, *Equivalent Method,* and Table V, *Table of Standards, Applicable Statewide,* submitted on February 10, 1977.

(ii) Table V, *Concentrations and Methods,* submitted on January 2, 1979, and Table V, submitted on February 10, 1976 and previously approved at 42 FR 42224.

(e) Since the following air pollution control districts have revised definitions so as to render the associated emission control requirements less stringent without a control strategy demonstration, the revisions are disapproved.

(1) Mendocino County APCD.

(i) Rule 130(p4), submitted on November 10, 1976. (Part III–49, previously submitted on February 21, 1972, and approved in 40 CFR 52.223, is retained).

(ii) Rule 130(s3), submitted on November 10, 1976. (Part III–55, previously submitted on February 21, 1972, and approved in 40 CFR 52.233, is retained).

(2) Shasta County APCD.

(i) The definition of ''modification'' in Rule 1:2, *Definitions,* submitted on October 13, 1977, is disapproved.

(3) San Bernardino County Desert APCD.

(i) Rule 103, *Definition of Terms,* submitted on November 4, 1977, is disapproved with respect to the deletion of the following terms: ''Distilling type heater'', ''Noncomplying orchard heater'', ''Pipe line systems'', and ''Return stack heater''. (Rule 2, *Definitions,* submitted on February 21, 1972 and approved in 40 CFR 52.223, is retained for the above terms.)

(4) Southeast Desert Intrastate Region.

(i) San Bernardino County Desert APCD.

(A) Rule 102, *Definition of Terms,* submitted November 4, 1977 is disapproved with respect to the deletion of the following terms: Distilling type heater, Non-complying orchard heater, Pipe line systems, and Return stack heater. Rule 2, *Definitions,* submitted February 21, 1972 and approved in 40 CFR 52.223, is retained for the above terms.

(f) The following APCD rules are disapproved because they exempt some portions of the districts from the existing air pollution control regulations without setting forth substitute rules for the exempted areas.

(1) El Dorado County APCD.

(i) Rule 201, submitted on November 4, 1977, is disapproved. (The previously approved Rule 49, submitted on June 30, 1972, is retained for Federal enforcement purposes.)

(g) The following Air Pollution Control District (APCD) rules are disapproved pursuant to section 110(a)(2)(K) of the Clean Air Act because they could allow recovery of legal expenses associated with permit enforcement actions.

(1) Monterey Bay Unified APCD.

(i) Rule 300 (i)(1), *Permit Fee,* submitted on December 17, 1979.

(2) El Dorado County APCD.

(i) Rule 104, submitted on May 23, 1979.

[42 FR 39664, Aug. 5, 1977]

EDITORIAL NOTE: For FEDERAL REGISTER citations affecting § 52.236, see the List of CFR Sections Affected in the Finding Aids section of this volume.

§ 52.237 Part D disapproval.

(a) The following portions of the California SIP are disapproved because they do not meet the requirements of Part D of the Clean Air Act.

(1) The ozone and CO attainment demonstrations for the South Coast Air Basin. No major stationary source, or major modification of a stationary source, of carbon monoxide or volatile organic compounds may be constructed in the South Coast Air Basin unless the construction permit application is complete on or before August 30, 1988.

(2) The ozone attainment demonstration for Ventura County. No major stationary source, or major modification of a stationary source, of volatile organic compounds may be constructed in the Ventura County nonattainment area unless the construction permit application is complete on or before November 4, 1988.

(3) The ozone attainment demonstration for the Sacramento AQMA. No major stationary source, or major modification of a stationary source, of volatile organic compounds may be constructed in the Sacramento nonattainment area unless the construction permit application is complete on or before January 3, 1989.

(4) The ozone attainment demonstration for the Fresno County APCD.

(5) The ozone attainment demonstration for the Kern County APCD.

[46 FR 5979, Jan. 21, 1981, as amended at 48 FR 53118, Nov. 25, 1983; 50 FR 35798; Sept. 4, 1985; 53 FR 1781, Jan. 22, 1988; 53 FR 39088, Oct. 5, 1988; 53 FR 48537, Dec. 1, 1988; 55 FR 9878, 9880, Mar. 16, 1990; 56 FR 2853, Jan. 25, 1991]

§ 52.238 [Reserved]

§ 52.239 Alternate compliance plans.

(a) Alternative compliance plans (bubble plans) developed under the District rules listed below must be submitted to EPA by the State of California as SIP revisions. The emission limits contained in the District rule will continue to be enforceable by EPA and private citizens under sections 113 and 304(a) of the Act until the alternative compliance plans are approved by EPA for inclusion in the SIP.

(1) Bay Area AQMD.

(i) Rule 4 of Regulation 8, submitted on February 7, 1980.

(b) Alternative compliance plans (bubble plans) developed under the District rules listed below are considered the applicable requirements in the SIP which are enforceable by EPA and private citizens under section 113 and 304(a) of the Act. Alternative compliance plans must be submitted to EPA after their approval by the District. The District rules do not apply to or supersede the conditions that a source must meet under nonattainment or

PSD permit programs, new source performance standards, or national emission standards for hazardous air pollutants.

(1) Bay Area AQMD.

(i) Rules 11, 13 and 19 of Regulation 8, submitted on February 7, 1980.

[47 FR 11870, Mar. 19, 1982]

§52.240 Compliance schedules.

(a) The requirements of §51.262(a) of this chapter are not met in the following Air Pollution Control Districts since the regulations cited do not provide increments to progress toward compliance.

(1) Rules 50–A, 52–A, 53–A(a), 53–A(b), 53–A(c), 53.2, 53.3, 54.A, 58.A, 62.1, 68, 69, 70, and 71 of the San Bernardino County APCD.

(2) Rules 53, 72.1, and 72.2 of the Riverside County APCD.

(3) Rules 53, 66.c, and 68.a of the Orange County APCD.

(4) Rule 39.1 of the Santa Barbara County APCD.

(5) Rule 59 of the Ventura County APCD.

(6) Rule 66(c) of the Los Angeles County APCD.

(7) Rule 4.5 of the Siskiyou County APCD.

(8) Rule 64(c) of the Northern Sonoma County APCD.

(9) Rule 409 of the Tulare County APCD.

(b) The requirements of §51.261 are not met since Rule 68.a of the Orange County Air Pollution Control District does not provide for compliance within 3 years after the Administrator's approval of the plan.

(c) Federal compliance schedule. (1) Except as provided in paragraph (c)(2) of this section, the owner or operator of any stationary source subject to Rule 68.a of the Orange County Air Pollution Control District shall comply with such rule or regulation on or before January 31, 1974.

(i) Any owner or operator in compliance with this rule on the effective date of this regulation shall certify such compliance to the Administrator no later than 120 days following the effective date of this paragraph.

(ii) Any owner or operator who achieves compliance with such rule or regulation after the effective date of this regulation shall certify such compliance to the Administrator within 5 days of the date compliance is achieved.

(2) Any owner or operator of a stationary source subject to paragraph (c)(1) of this section may, not later than 120 days following the effective date of this paragraph, submit to the Administrator for approval a proposed compliance schedule that demonstrates compliance with the rules and regulations specified in paragraph (c)(1) of this section as expeditiously as practicable but no later than July 31, 1975. The compliance schedule shall provide for increments of progress toward compliance. The dates for achievement of such increments of progress shall be specified. Increments of progress shall include, but not be limited to: Submittal of final control plan to the Administrator; letting of necessary contracts for construction or process changes or issuance of orders for the purchase of component parts to accomplish emission control or process modification; initiation of onsite construction or installation of emission control equipment or process modification; completion of onsite construction or installation of emissioncontrol equipment or process modification; and final compliance.

(3) Any owner or operator who submits a compliance schedule pursuant to this paragraph shall, within 5 days after the deadline for each increment of progress, certify to the Administrator whether or not the required increment of the approved compliance schedule has been met.

(d) Regulation for increments of progress. (1) The requirements of this paragraph are applicable to any stationary source in the following Air Pollution Control Districts subject to the indicated regulations.

(i) Rules 50–A, 52–A, 53–A(a), 53–A(b), 53–A(c), 53.2, 53.3, 54.A, 58.A, 62.1, 68, 69, 70, and 71 of the San Bernardino County APCD.

(ii) Rules 53, 72.1, and 72.2 of the Riverside County APCD.

(iii) Rules 53 and 66.c of the Orange County APCD.

(iv) Rule 39.1 of the Santa Barbara County APCD.

(v) Rule 59 of the Ventura County APCD.

(vi) Rules 66(c) and 68 of the Los Angeles County APCD.

(vii) Rule 4.5 of the Siskiyou County APCD.

(viii) Rule 64(c) of the Northern Sonoma County APCD.

(ix) Rule 409 of the Tulare County APCD.

(2) Except as provided in paragraph (3) of this section, the owner or operator of any stationary source shall, no later than 120 days following the effective date of this paragraph, submit to the Administrator for approval, a proposed compliance schedule that demonstrates compliance with the applicable regulations as expeditiously as practicable but no later than the final compliance date specified by such applicable regulation. The compliance schedule shall provide for periodic increments of progress toward compliance. The dates for achievement of such increments shall be specified. Increments of progress shall include, but not be limited to: Submittal of final control plan to the Administrator; letting of necessary contracts for construction or process changes or issuance of orders for the purchase of component parts to accomplish emission control or process modification; initiation of onsite construction or installation of emission control equipment or process modification; completion of onsite construction or installation of emission control equipment or process modification; and final compliance.

(3) Where any such owner or operator demonstrates to the satisfaction of the Administrator that compliance with the applicable regulations will be achieved on or before January 31, 1974, no compliance schedule shall be required.

(4) Any owner or operator who submits a compliance schedule pursuant to this paragraph shall, within 5 days after the deadline for each increment of progress, certify to the Administrator whether or not the required increment of the approved compliance schedule has been met.

(5) Any compliance schedule adopted by the State and approved by the Administrator shall satisfy the requirements of this paragraph for the affected source.

(e) [Reserved]

(f) State compliance schedules. (1) [Reserved]

(2) The compliance schedules for the sources identified below are disapproved as not meeting the requirements of Subpart N of this chapter. All regulations cited are air pollution control regulations of the county in which the source is located, unless otherwise indicated.

Source	Location (county)	Rule or regulation involved	Date of adoption	Effective date	Final compliance date
Simpson Lee Paper Co. (Order No. 72–V–7).	Shasta	3.2	Oct. 31, 1973	Immediately	Jan. 15, 1976.
Monolith Portland Cement Co. (Order No. 73–6 as amended Mar. 11, 1974).	Kern	401(b), 404.1, 406.	Dec. 31, 1973	.....do	July 1, 1976.

[37 FR 19814, Sept. 22, 1972]

EDITORIAL NOTE: For FEDERAL REGISTER citations affecting §52.240, see the List of CFR Sections Affected in the Finding Aids section of this volume.

§§ 52.241—52.245 [Reserved]

§ 52.246 Control of dry cleaning solvent vapor losses.

(a) For the purpose of this section, ''dry cleaning operation'' means that process by which an organic solvent is used in the commercial cleaning of garments and other fabric materials.

(b) This section is applicable in the Metropolitan Los Angeles, Sacramento Valley, and San Joaquin Valley Intrastate Air Quality Control Regions (the ''Regions''), as described in 40 CFR part 81, dated July 1, 1979, except as follows:

(1) In the following portions of the Sacramento Valley Region, this section is rescinded:

(i) Sacramento County APCD.

(ii) Placer County APCD (Mountain Counties Air Basin portion).

(iii) Yuba County APCD.

(iv) Sutter County APCD.

(2) In the following portions of the Metropolitan Los Angeles Intrastate Region, this section is rescinded:

(i) Ventura County APCD.

(3) In the following portions of the San Joaquin Valley Intrastate Region, this section is rescinded:

(i) San Joaquin County APCD.

(ii) Stanislaus County APCD.

(iii) Tulare County APCD.

(iv) Fresno County APCD.

(c) Any dry cleaning establishment that uses solvents containing 4 percent or more by volume of any reactive organic material listed under paragraphs (k) (1), (2), and (3) of §52.254 except perchloroethylene or any saturated halogenated hydrocarbon shall reduce the emissions of the discharged organics by 90 percent by use of activated carbon adsorption, or other appropriate means, not later than January 1, 1975.

(d) If incineration is used as a control technique, 90 percent or more of the carbon in the organic compounds being incinerated must be oxidized to carbon dioxide.

[38 FR 31246, Nov. 12, 1973, as amended at 42 FR 41122, Aug. 15, 1977; 42 FR 42226, Aug. 22, 1977; 47 FR 15586, Apr. 12, 1982; 47 FR 18856, May 3, 1982; 47 FR 26385, June 18, 1982; 47 FR 28622, July 1, 1982; 47 FR 29670, July 8, 1982; 47 FR 50865, Nov. 10, 1982]

§§52.247—52.251 [Reserved]

§52.252 Control of degreasing operations.

(a) ''Degreasing'' means any operation using an organic solvent as a surface cleaning agent prior to fabricating, surface coating, electroplating, or any other process.

(b) This section is applicable in the Sacramento Valley, San Joaquin Valley, and San Francisco Bay Area Intrastate Air Quality Control Regions (the ''Regions''), as described in 40 CFR part 81, dated July 1, 1979, except as follows:

(1) In the following portions of the Sacramento Valley Region, this section is rescinded:

(i) Sacramento County APCD.

(ii) Placer County APCD (Mountain Counties Air Basin portion).

(iii) Yuba County APCD.

(iv) Sutter County APCD.

(c) Any organic emissions discharged from degreasing operations must either be reduced by at least 85 percent, or the degreasing solvent must be classified as non-photochemically reactive as defined by paragraph (k) of §52.254 not later than January 1, 1975. This regulation shall not be construed as lessening any emission control requirement specified under EPA approved regulations or §52.254. Degreasing operations using perchloroethylene or saturated halogenated hydrocarbons shall be exempt from the requirements of this section.

[38 FR 31249, Nov. 12, 1973, as amended at 42 FR 42226, Aug. 22, 1977; 47 FR 15586, Apr. 12, 1982; 47 FR 18856, May 3, 1982; 47 FR 19332, May 5, 1982; 47 FR 28622, July 1, 1982]

§52.253 Metal surface coating thinner and reducer.

(a) All terms defined in §52.254 are used herein with the meanings so defined.

(b) This section is applicable in the Metropolitan Los Angeles, San Diego, Sacramento Valley, San Joaquin Valley, and San Francisco Bay Area Intrastate Air Quality Control Regions (the ''Regions''), as described in 40 CFR part 81, dated July 1, 1979, except as follows:

(1) In the following portions of the Sacramento Valley Intrastate Region, this section is either fully rescinded or partially rescinded subject to the conditions specified as follows:

(i) Sacramento County APCD.

(ii) Placer County APCD (Mountain Counties Air Basin portion).

(iii) This section is rescinded for metal parts and products coaters which are subject to and in full compliance with Yolo-Solano County Rule 2.25 submitted on February 25, 1980.

(iv) Yuba County APCD.

(v) Sutter County APCD.

(2) In the following portions of the Metropolitan Los Angeles Intrastate Region, this section is either fully rescinded or partially rescinded subject to the conditions specified as follows:

(i) This section is fully rescinded for the Ventura County APCD.

(ii) This section is rescinded for magnet wire insulators, can and coil coaters, metal parts coaters, and auto

assembly line coaters which are subject to and in full compliance with Rules 1107, 1115, 1125, and 1126 in the South Coast AQMD.

(iii) This section is rescinded for metal parts coaters that are subject to and in full compliance with Rule 330 submitted on October 18, 1979, in the Santa Barbara County APCD.

(3) In the following portions of the San Joaquin Valley Intrastate Region, this section is rescinded for certain sources subject to the conditions specified:

(i) This section is rescinded for metal parts and products coaters which are subject to and in full compliance with Kern County Rule 410.4, submitted on October 15, 1979.

(ii) This section is rescinded for metal parts and products coaters which are subject to and in full compliance with Madera County APCD's Rule 410.4 submitted on October 10, 1980.

(iii) This section is rescinded for metal parts and products coaters which are subject to and in full compliance with Merced County Rule 409.4 submitted on October 10, 1980.

(iv) This section is rescinded for metal parts and products coaters which are subject to and in full compliance with San Joaquin County Rule 409.4 submitted on October 10, 1980.

(v) This section is rescinded for metal parts and products coaters which are subject to and in full compliance with Stanislaus County Rule 410.4 submitted on October 10, 1980.

(vi) This section is rescinded for metal parts and products coaters which are subject to and in full compliance with Tulare County Rule 410.4 submitted on October 10, 1980.

(vii) This section is rescinded for metal parts and products coaters which are subject to and in full compliance with Kings County Rule 410.4 submitted on October 10, 1980.

(viii) This section is rescinded for metal parts and products coaters which are subject to and in full compliance with Fresno County Rule 409.4 submitted on October 15, 1979.

(4) In the San Francisco Bay Area Intrastate Region this section is rescinded for certain operations, subject to the conditions specified below:

(i) This section is rescinded for metal container, closure and coil coating operations, light and medium-duty motor vehicle assembly plants, large appliance and metal furniture coaters, and miscellaneous metal parts and products coating operations, which are subject to and in full compliance with Rules 11, 13, 14, and 19 of Regulation 8 in the Bay Area AQMD.

(5) In the San Diego Intrastate Region, this section is rescinded:

(i) This section is rescinded for metal parts and products coaters which are subject to and in full compliance with San Diego APCD Rule 67.3, submitted on October 25, 1979.

(c) The composition of the organics in all metal surface coating thinners and reducers that are manufactured after January 1, 1975, and are used in the Regions, shall conform to paragraph (k) of § 52.254 so as to be defined as a nonphotochemically reactive solvent.

(d) After July 1975, the composition of the organics in all metal surface coating thinners and reducers that are used in the Regions, shall conform to paragraph (k) of § 52.254 so as to be defined as a non-photochemically reactive solvent.

(e) If there is an inadequate supply of necessary solvent ingredients needed in the manufacture of metal surface coating thinners and reducers for the purpose of meeting the composition requirements of this section in the time constraint required by this section; then evidence of such a supply inadequacy must be presented to the Administrator by the manufacturers of the metal surface coating thinners and reducers, so that the Administrator may grant to the industry an appropriate implementation time extension for meeting the requirements of this section, if and as warranted by the evidence presented.

[38 FR 31249, Nov. 12, 1973, as amended at 42 FR 28123, June 2, 1977; 46 FR 5979, Jan. 21, 1981; 46 FR 42461, Aug. 21, 1981; 47 FR 11870, Mar. 19, 1982; 47 FR 15586, Apr. 12, 1982; 47 FR 18856, May 3, 1982; 47 FR 19332, May 5, 1982; 47 FR 19698, May 7, 1982; 47 FR 24308, June 4, 1982; 47 FR 28622, July 1, 1982]

§52.254 Organic solvent usage.

(a) This section is applicable in the Sacramento Valley, San Francisco Bay Area, and San Joaquin Valley Intrastate Air Quality Control Regions (the ''Regions''), as described in 40 CFR part 81, dated July 1, 1979, except as follows:

(1) In the following portions of the San Joaquin Valley Region, only the hourly emission limitations contained in paragraphs (b), (c), and (d) of this section are in effect; the following paragraphs, needed for interpretation are also in effect: Paragraphs (e) through (l) and (o) through (q) of this section. In addition, this section is entirely rescinded for specific operations for some of the counties noted below:

(i) This section is rescinded entirely for metal parts and products coaters which are subject to and in full compliance with Rule 409.4 for the Fresno County APCD, Rule 410.4 for the Kings County APCD, Rule 410.4 for the Madera County APCD, Rule 409.4 for the Merced County APCD, Rule 409.4 for the San Joaquin County APCD, Rule 409.4 for the Stanislaus County APCD, and Rule 410.4 for the Tulare County APCD.

(ii) Kern County APCD. This section is rescinded entirely for metal parts and product coaters which are subject to and in full compliance with Rule 410.4.

(iii) Fresno County APCD.

(iv) San Joaquin County APCD.

(v) Madera County APCD.

(vi) Merced County APCD.

(2) In the following portions of the San Joaquin Valley Region, only the hourly emission limitations contained in paragraphs (b), (c), and (d) of this section and the architectural coatings and solvent disposal emission limitations contained in paragraphs (m) and (n) of this section are in effect; the following paragraphs, needed for interpretation and enforcement of these emission limitations, are also in effect: Paragraphs (e) through (l) and (o) through (q) of this section.

(i) Kings County APCD.

(3) In the following portions of the Sacramento Valley Region, this section is rescinded:

(i) Sacramento County APCD.

(ii) Yolo-Solano APCD.

(iii) Shasta County APCD.

(iv) Placer County APCD (Mountain Counties Air Basin portion).

(v) Yuba County APCD.

(vi) Sutter County APCD.

(vii) El Dorado County (Mountain Counties Air Basin portion).

(4) This section is rescinded for the San Francisco Bay Area Intrastate Region except for paragraph (d), which is retained until December 31, 1982 for sources constructed prior to October 2, 1974. The following paragraphs, needed for interpretation and enforcement of paragraph (d) are also in effect: Paragraphs (e) through (l) and (o) through (q) of this section.

(5) In the following portions of the Sacramento Valley Intrastate Region, paragraph (m) of this section is rescinded.

(i) Butte County APCD.

(ii) Sutter County APCD.

(b) No person shall discharge into the atmosphere more than 15 pounds of organic materials in any 1 day or more than 3 pounds in any 1 hour from any article, machine, equipment, or other contrivance in which any organic solvent or any material containing organic solvent comes into contact with flame or is baked, heat-cured, or heat-polymerized in the presence of oxygen, unless said discharge has been reduced by at least 85 percent. Those portions of any series of articles, machines, equipment, or other contrivances designed for processing continuous web, strip, or wire that emit organic materials in the course of using operations described in this section shall be collectively subject to compliance with this section.

(c) A person shall not discharge to the atmosphere more than 40 pounds of organic materials in any 1 day or more than 8 pounds in any 1 hour from any article, machine, equipment, or other contrivance used under conditions other than those described in paragraph (b) of this section for employing or applying any photochemically reactive solvent, as defined in paragraph (k) of this section, or material containing such photochemically reactive solvent, unless said discharge has been reduced by at least 85 percent. Emissions of organic materials into the atmosphere resulting from air- or heated-drying of products for the first 12 hours

after their removal from any article, machine, or other contrivance described in this section shall be included in determining compliance with this paragraph. Emissions resulting from baking, heat-curing, or heat-polymerizing as described in paragraph (b) of this section shall be excluded from determination of compliance with this section. Those portions of any series of articles, machines, equipment, or other contrivances designed for processing a continuous web, strip, or wire that emit organic materials in the course of using operations described in this section shall be collectively subject to compliance with this section.

(d) A person shall not, after August 31, 1976, discharge into the atmosphere more than 3,000 pounds of organic materials in any 1 day or more than 450 pounds in any 1 hour from any article, machine, equipment, or other contrivance in which any non-photochemically reactive organic solvent or any material containing such a solvent is employed or applied, unless said discharge has been reduced by at least 85 percent. Emissions of organic materials into the atmosphere resulting from air- or heated-drying of products for the first 12 hours after their removal from any article, machine, equipment, or other contrivance described in this section shall be included in determining compliance with this section. Emissions resulting from baking, heat-curing, or heat-polymerizing as described in paragraph (b) of this section shall be excluded from determination of compliance with this section. Those portions of any series of articles, machines, equipment, or other contrivances designed for processing a continuous web, strip, or wire that emit organic materials in the course of using operations described in this section shall be collectively subject to compliance with this section.

(e) Emissions of organic materials to the atmosphere from the cleaning with photochemically reactive solvent, as defined in paragraph (k) of this section, of any article, machine, equipment, or other contrivance described in paragraph (b), (c), or (d) of this section, shall be included with the other emissions of organic materials for determining compliance with this rule.

(f) Emissions of organic materials into the atmosphere required to be controlled by paragraph (b), (c), or (d) of this section, shall be reduced by:

(1) Incineration, provided that 90 percent or more of the carbon in the organic material being incinerated is oxidized to carbon dioxide, or

(2) Adsorption, or

(3) Processing in a manner determined by the Administrator to be not less effective than the methods outlined in paragraph (f) (1) or (2) of this section.

(g) A person incinerating, adsorbing, or otherwise processing organic materials pursuant to this section shall provide, properly install and maintain in calibration, in good working order and in operation, devices as specified in the authority to construct or permit to operate, or as specified by the Administrator, for indicating temperatures, pressures, rates of flow, or other operating conditions necessary to determine the degree and effectiveness of air pollution control.

(h) Any person using organic solvents or any materials containing organic solvents shall supply the Administrator upon request and in the manner and form prescribed by him, written evidence of the chemical composition, physical properties, and amount consumed for each organic solvent used.

(i) The provisions of this section shall not apply to:

(1) The manufacture of organic solvents, or the transport or storage of organic solvents or materials containing organic solvents.

(2) The use of equipment for which other requirements are specified by rules or which are exempted from air pollution control requirements by applicable rules affecting the storage of petroleum products, effluent oil-water separators, and the transfer of gasoline.

(3) The spraying or other employment of insecticides, pesticides, or herbicides.

(4) The employment, application, evaporation, or drying of saturated halogenated hydrocarbons or perchloroethylene.

(5) The use of any material in any article, machine, equipment, or other

contrivance described in paragraph (b), (c), (d), or (e) of this section, if:

(i) The volatile content of such materials consists only of water and organic solvent, and

(ii) The organic solvents comprise not more than 20 percent by volume of said volatile content, and

(iii) The volatile content is not photochemically reactive as defined in paragraph (k) of this section, and

(iv) The organic solvent or any material containing organic solvent does not come into contact with flame.

This last stipulation applies only for those articles, machines, equipment, or contrivances that are constructed or modified after the effective date of this section.

(6) The use of any material in any article, machine, equipment or other contrivance described in paragraph (b), (c), (d), or (e) of this section, if:

(i) The organic solvent content of such material does not exceed 30 percent by volume of said material; this to be effective until January 1, 1977. After January 1, 1977, the organic solvent content of such material must not exceed 20 percent by volume of said material.

(ii) The volatile content is not photochemically reactive as defined in paragraph (k) of this section, and

(iii) The organic solvent or any material containing organic solvent does not come into contact with flame. This last stipulation applies only for those articles, machines, equipment, or contrivances that are constructed or modified after the effective date of this section.

(j) For the purposes of this section, organic solvents include diluents, thinners, and reducers and are defined as organic materials that are liquids at standard conditions and are used as dissolvers, viscosity reducers, or cleaning agents, except that such materials exhibiting a boiling point higher than 220° F at 0.5 millimeter mercury absolute pressure or having an equivalent vapor pressure shall not be considered to be solvents unless exposed to temperatures exceeding 220° F.

(k) For the purpose of this section, a photochemically reactive solvent is any solvent with an aggregate of more than 20 percent of its total volume composed of the chemical compounds classified below or which exceeds any of the following individual percentage composition limitations, referred to the total volume of solvent:

(1) A combination of hydrocarbons, alcohols, aldehydes, esters, ethers, or ketones having an olefinic or cycloolefinic type of unsaturation; 5 percent;

(2) A combination of aromatic compounds with 8 or more carbon atoms to the molecule except ethylbenzene, phenyl acetate, and methyl benzoate; 8 percent;

(3) A combination of ethylbenzene, ketones having branched hydrocarbon structures, trichloroethylene or toluene: 20 percent.

Whenever any organic solvent or any constituent of an organic solvent may be classified from its chemical structure into more than one of the above groups of organic compounds, it shall be considered as a member of the most reactive chemical group, that is, that group having the least allowable percent of the total volume of solvents.

(l) For the purpose of this section, organic materials are defined as chemical compounds of carbon excluding carbon monoxide, carbon dioxide, carbonic acid, metallic carbonates, and ammonium carbonate.

(m) Architectural coatings and their use shall conform to the following requirements, on or before January 1, 1975:

(1) A person shall not sell or offer for sale or use in the areas in which this section applies, in containers of 1-quart capacity or larger, any architectural coating containing photochemically reactive solvent, as defined in paragraph (k) of this section.

(2) A person shall not employ, apply, evaporate, or dry in the areas in which this section applies, any architectural coating purchased in containers of 1–quart capacity or larger containing photochemically reactive solvent, as defined in paragraph (k) of this section.

(3) A person shall not thin or dilute any architectural coating with a photochemically reactive solvent, as defined in paragraph (k) of this section.

(4) For the purpose of this section, an architectural coating is defined as a

coating used for residential or commercial buildings and their appurtenances, or for industrial buildings.

(n) A person shall not during any one day dispose of a total of more than 1.5 gallons of any photochemically reactive solvent as defined in paragraph (k) of this section, or of any material containing more than 1.5 gallons of any such photochemically reactive solvent by any means that will permit the evaporation of such solvent into the atmosphere.

(o) *Compliance schedule.* (1) Except where other final compliance dates are provided in this section, the owner or operator of any stationary source subject to this section shall comply with this section on or before March 31, 1974. In any event:

(i) Any owner or operator in compliance with this section on the effective date of this section shall certify such compliance to the Administrator no later than 120 days following the effective date of this section.

(ii) Any owner or operator who achieves compliance with this section after the effective date of this section shall certify such compliance to the Administrator within 5 days of the date compliance is achieved.

(p) Any owner or operator of a stationary source subject to paragraph (o)(1) of this section may, not later than 120 days following the effective date of this section, submit to the Administrator for approval a proposed compliance schedule that demonstrates compliance with the provisions in paragraph (o)(1) of this section as expeditiously as practicable but no later than July 31, 1975. The compliance schedule shall provide for increments of progress toward compliance. The dates for achievement of such increments of progress shall be specified. Increments of progress shall include, but not be limited to:

Submittal of a final control plan to the Administrator; letting of necessary contracts for construction or process changes or issuance of orders for the purchase of component parts to accomplish emission control or process modification; initiation of onsite construction or installation of emission control equipment or process modification; completion of onsite construction or installation of emission control equipment or process modification and final compliance.

(q) Any owner or operator who submits a compliance schedule pursuant to this section shall, within 5 days after the deadline for each increment of progress, certify to the Administrator whether or not the required increment of the approved compliance schedule has been met.

[38 FR 31249, Nov. 12, 1973]

EDITORIAL NOTE: For FEDERAL REGISTER citations affecting § 52.254, see the List of CFR Sections Affected in the Finding Aids section of this volume.

§ 52.255 Gasoline transfer vapor control.

(a) ''Gasoline'' means any petroleum distillate having a Reid vapor pressure of 4 pounds or greater.

(b) This section is applicable in the Metropolitan Los Angeles and Sacramento Valley Intrastate Air Quality Control Regions, as described in 40 CFR part 81, dated July 1, 1979, with the following exceptions:

(1) The control requirements of this section are limited to facilities with a total throughput less than 20,000 gallons per day, the refilling of delivery vessels at these facilities, and storage containers serviced by these facilities for those air pollution control districts identified below.

(i) Ventura County APCD.

(2) The control requirements of this section are rescinded in the following air pollution control districts.

(i) South Coast AQMD.

(ii) Santa Barbara County APCD.

(iii) Placer County APCD (Mountain Counties Air Basin portion).

(iv) Sacramento County APCD.

(v) Yolo-Solano County APCD.

(vi) Butte County APCD.

(vii) Glenn County APCD.

(viii) El Dorado County APCD (Mountain Counties Air Basin portion).

(3) The control requirements of this section are rescinded in the following air pollution control districts:

(i) South Coast AQMD.

(ii)–(viii) [Reserved]

(ix) Santa Barbara County APCD.

(x) Placer County APCD (Mountain Counties Air Basin portion).

(xi) Sacramento County APCD.

(xii) Yolo-Solano County APCD.

(xiii) Butte County APCD.

(xiv) Glenn County APCD.

(c) No person shall transfer gasoline from any delivery vessel into any stationary storage container with a capacity greater than 250 gallons unless such container is equipped with a submerged fill pipe and unless the displaced vapors from the storage container are processed by a system that prevents release to the atmosphere of no less than 90 percent by weight of organic compounds in said vapors displaced from the stationary container location.

(1) The vapor recovery portion of the system shall include one or more of the following:

(i) A vapor-tight return line from the storage container to the delivery vessel and a system that will ensure that the vapor return line is connected before gasoline can be transferred into the container.

(ii) Refrigeration-condensation system or equivalent designed to recover no less than 90 percent by weight of the organic compounds in the displaced vapor.

(2) If a ''vapor-tight vapor return'' system is used to meet the requirements of this section, the system shall be so constructed as to be readily adapted to retrofit with an adsorption system, refrigeration-condensation system, or equivalent vapor removal system, and so constructed as to anticipate compliance with §52.256.

(3) The vapor-laden delivery vessel shall be subject to the following conditions:

(i) The delivery vessel must be so designed and maintained as to be vapor-tight at all times.

(ii) The vapor-laden delivery vessel may be refilled only at facilities equipped with a vapor recovery system or the equivalent, which can recover at least 90 percent by weight of the organic compounds in the vapors displaced from the delivery vessel during refilling.

(iii) Facilities that do not have more than a 20,000 gallon per day throughput, and distribute less than 10% of daily volume to delivery vehicles that in turn service storage tanks that are required to have a vapor return or balance system, will not be required to comply with the provisions of paragraph (c) of this section before May 31, 1977. Facilities that service delivery vehicles that in turn deliver not more than 500,000 gallons per year to storage tanks that are required to comply with the provisions of paragraph (c) of this section will not be required to comply with the provisions of paragraph (c) of this section before January 1, 1977. Facilities that exclusively service storage tanks that do not have a required vapor return or balance system, will not be required to have a vapor recovery system.

(iv) Gasoline storage compartments of 1,000 gallons or less in gasoline delivery vehicles presently in use on the promulgation date of this regulation will not be required to be retrofitted with a vapor return system until May 31, 1977.

(v) Storage containers served by delivery vessels filled at distribution facilities with extended compliance dates will not be required to comply with the provisions of paragraph (c) of this section until May 31, 1977.

(d) The provisions of paragraph (c) of this section shall not apply to the following:

(1) Storage containers used primarily for the fueling of implements of husbandry, if such container is equipped by May 31, 1977 with a permanent submerged fill pipe, or at the time of installation for containers installed after this date.

(2) Any storage container having a capacity of 2,000 gallons or less and installed prior to July 1, 1975, if such container is equipped with a permanent submerged fill pipe by May 31, 1977.

(3) Transfer made to storage tanks equipped with floating roofs or their equivalent.

(4) Storage containers installed after July 1, 1975 in Kings County.

(5) Storage containers installed after January 1, 1975 in Madera County.

(e) Compliance schedule:

(1) June 1, 1974—Submit to the Administrator a final control plan, which describes at a minimum the steps that will be taken by the source to achieve compliance with the provisions of paragraph (c) of this section.

(2) March 1, 1975—Negotiate and sign all necessary contracts for emission

control systems, or issue orders for the purchase of component parts to accomplish emission control.

(3) May 1, 1975—Initiate on-site construction or installation of emission control equipment.

(4) February 1, 1976—Complete on-site construction or installation of emission control equipment.

(5) July 1, 1976—Assure final compliance with the provisions of paragraph (c) of this section.

(6) Any owner or operator of sources subject to the compliance schedule in this paragraph shall certify to the Administrator, within 5 days after the deadline for each increment of progress, whether or not the required increment of progress has been met.

(f) Paragraph (e) of this section shall not apply:

(1) To a source which is presently in compliance with the provisions of paragraph (c) of this section and which has certified such compliance to the Administrator by June 1, 1974. The Administrator may request whatever supporting information he considers necessary for proper certification.

(2) To a source for which a compliance schedule is adopted by the State and approved by the Administrator.

(3) To a source whose owner or operator submits to the Administrator, by June 1, 1974, a proposed alternative schedule. No such schedule may provide for compliance after March 1, 1976. If promulgated by the Administrator, such schedule shall satisfy the requirements of this section for the affected source.

(g) Nothing in this section shall preclude the Administrator from promulgating a separate schedule for any source to which the application of the compliance schedule in paragraph (e) of this section fails to satisfy the requirements of §§51.261 and 51.262(a) of this chapter.

(h) Any gasoline-dispensing facility subject to this section that installs a storage tank after the effective date of this section shall comply with the requirements of paragraph (c) of this section by March 1, 1976 and prior to that date shall comply with paragraph (e) of this section as far as possible. Any facility subject to this section that installs a storage tank after March 1, 1976, shall comply with the requirements of paragraph (c) of this section at the time of installation.

[38 FR 31251, Nov. 12, 1973]

EDITORIAL NOTE: For FEDERAL REGISTER citations affecting §52.255, see the List of CFR Sections Affected in the Finding Aids section of this volume.

§ 52.256 Control of evaporative losses from the filling of vehicular tanks.

(a) ''Gasoline'' means any petroleum distillate having a Reid vapor pressure of 4 pounds or greater.

(b) This section is applicable in the Metropolitan Los Angeles and Sacramento Valley Intrastate Air Quality Control Regions, except as follows:

(1) In the following portions of the Metropolitan Los Angeles Intrastate Region, this section is rescinded.

(i) South Coast AQMD.

(ii) Santa Barbara County APCD.

(2) In the following portions of the San Joaquin Valley Intrastate Region, this section is rescinded.

(i) Kings County APCD.

(3) In the following portion of the Sacramento Valley Intrastate Region, this section is rescinded.

(i) Sacramento County APCD.

(ii) El Dorado County APCD (Mountain Counties Air Basin portion).

(iii) Placer County APCD (Mountain Counties Air Basin portion).

(c) A person shall not transfer gasoline to an automotive fuel tank from a gasoline dispensing system unless the transfer is made through a fill nozzle designed to:

(1) Prevent discharge of hydrocarbon vapors to the atmosphere from either the vehicle filler neck or dispensing nozzle;

(2) Direct vapor displaced from the automotive fuel tank to a system wherein at least 90 percent by weight of the organic compounds in displaced vapors are recovered; and

(3) Prevent automotive fuel tank overfills or spillage on fill nozzle disconnect.

(d) The system referred to in paragraph (c) of this section can consist of a vapor-tight vapor return line from the fill nozzle/filler neck interface to

the dispensing tank or to an adsorption, absorption, incineration, refrigeration-condensation system or its equivalent.

(e) Components of the systems required by paragraph (c) of §52.255 can be used for compliance with paragraph (c) of this section.

(f) If it is demonstrated to the satisfaction of the Administrator that it is impractical to comply with the provisions of paragraph (c) of this section as a result of vehicle fill neck configuration, location, or other design features for a class of vehicles, the provisions of this paragraph shall not apply to such vehicles. However, in no case shall such configuration exempt any gasoline dispensing facility from installing and using in the most effective manner a system required by paragraph (c) of this section.

(g) Compliance schedule:

(1) January 1, 1975—Submit to the Administrator a final control plan, which describes at a minimum the steps that will be taken by the source to achieve compliance with the provisions of paragraph (c) of this section.

(2) March 1, 1975—Negotiate and sign all necessary contracts for emission control systems, or issue orders for the purchase of component parts to accomplish emission control.

(3) May 1, 1975—Initiate on-site construction or installation of emission control equipment. Compliance with the requirements of paragraph (c) of this section shall be as soon as practicable, but no later than specified in paragraphs (g) (4) and (5)of this section.

(4) May 1, 1977—Complete on-site construction or installation of emission control equipment or process modification.

(5) May 31, 1977—Assure final compliance with the provisions of paragraph (c) of this section.

(6) Any owner or operator of sources subject to the compliance schedule in this paragraph (g) shall certify to the Administrator, within 5 days after the deadline for each increment of progress, whether or not the required increment of progress has been met.

(h) Paragraph (g) of this section shall not apply:

(1) To a source which is presently in compliance with the provisions of paragraph (c) of this section and which has certified such compliance to the Administrator by January 1, 1975. The Administrator may request whatever supporting information he considers necessary for proper certification.

(2) To a source for which a compliance schedule is adopted by the State and approved by the Administrator.

(3) To a source whose owner or operator submits to the Administrator, by June 1, 1974, a proposed alternative schedule. No such schedule may provide for compliance after May 31, 1977. If promulgated by the Administrator, such schedule shall satisfy the requirements of this section for the affected source.

(i) Nothing in this section shall preclude the Administrator from promulgating a separate schedule for any source to which the application of the compliance schedule in paragraph (g) of this section fails to satisfy the requirements of §§51.261 and 51.262(a) of this chapter.

(j) Any gasoline dispensing facility subject to this section that installs a gasoline dispensing system after the effective date of this section shall comply with the requirements of paragraph (c) of this section by May 31, 1977, and prior to that date shall comply with paragraph (g) of this section as far as possible. Any facility subject to this section that installs a gasoline dispensing system after May 31, 1977, shall comply with the requirements of paragraph (c) of this section at the time ofinstallation.

[38 FR 31251, Nov. 12, 1973, as amended at 39 FR 4881, Feb. 8, 1974; 39 FR 21053, June 18, 1974; 46 FR 5979, Jan. 21, 1981; 46 FR 60203, Dec. 9, 1981; 47 FR 19332, May 5, 1982; 47 FR 19698, May 7, 1982; 47 FR 28622, July 1, 1982; 47 FR 29538, July 7, 1982; 51 FR 40676, Nov. 7, 1986]

EDITORIAL NOTE: The compliance dates given in paragraphs (g) (1) through (3) were deferred indefinitely at 40 FR 1127, Jan. 6, 1975.

§§52.257—52.262 [Reserved]

§52.263 Priority treatment for buses and carpools—Los Angeles Region.

(a) Definitions: (1) ''Carpool'' means a vehicle containing three or more persons.

(2) ''Bus/carpool lane'' means a lane on a street or highway open only to buses (or to buses and carpools), whether constructed especially for that purpose or converted from existing lanes.

(3) ''Preferential treatment'' for any class of vehicles, means either the setting aside of one traffic lane for the exclusive use of such vehicles or other measures (for example, access metering or setting aside the entire street), which the Administrator finds would be at least equal in VMT reduction effect to the establishment of such a lane.

(b) This regulation is applicable in the Metropolitan Los Angeles Intrastate Air Quality Control Region (the ''Region'').

(c) On or before May 31, 1974, the State of California, through the State Department of Transportation or through other agencies to which legal authority has been delegated, shall establish the following system of bus/carpool lanes.

(1) Ventura/Hollywood Corridor—a concurrent flow exclusive bus/carpool lane from Topanga Canyon Boulevard, Woodland Hills (U.S. 101) to junction of the Hollywood Freeway, and contraflow on the Hollywood Freeway (U.S. 101) from the junction with Ventura Freeway in North Hollywood to Vermont Avenue, and bus preferential treatment on arterial surface streets from Vermont Avenue to the Los Angeles central business district (CBD).

(2) Harbor Freeway Corridor—contraflow on Harbor Freeway (California 11) from vicinity of Pacific Coast Highway, in Wilmington, to junction of Santa Monica Freeway (I–10), then by surface street preferential treatment to LA/CBD.

(3) Wilshire Corridor—surface street preferential bus treatment from vicinity of San Vincente Boulevard, to LA/CBD.

(4) San Bernardino Freeway Corridor–Bus/carpool lane, either contraflow, or concurrent flow on San Bernardino Freeway from El Monte terminus of existing San Bernardino Freeway bus lane (I–10), to vicinity of Ontario Airport.

(5) Priority Treatment in CBD—provide preferential treatment in CBD on surface streets to connect Wilshire and San Bernardino corridors.

(d) On or before May 31, 1976, the State of California, through the State Department of Transportation or other agencies to which legal authority has been delegated, shall establish the following system of bus and bus/carpool lanes:

(1) Contraflow lane on the Golden State Freeway (I–5) from junction of Ventura Freeway (California 134) in Los Angeles to San Bernardino Freeway (I–10).

(2) Contraflow on Pasadena Freeway (California 11) from terminus in City of Pasadena to Hollywood Freeway (U.S. 101).

(3) Contraflow on Pomona Freeway from San Gabriel Freeway (I–605) to Santa Ana Freeway (I–5).

(4) Concurrent flow in San Diego Freeway (I–405) from Ventura Freeway (U.S. 101) in Sherman Oaks to Newport Freeway (California 55), Costa Mesa.

(5) Concurrent flow on Long Beach Freeway (California 7) from Santa Ana Freeway (I–5), City of Commerce to San Diego Freeway (I–405), Long Beach.

(6) Artesia Freeway (California 91) from Santa Ana Freeway (I–5) to Long Beach Freeway (California 7), Long Beach.

(e) State III will include specific routes in other portions of the Region.

(f) On or before December 31, 1973, the State of California shall submit to the Administrator a compliance schedule showing the steps it will take to establish the system of bus/carpool lanes required by paragraphs (c) and (d) of this section, with each schedule to include the following:

(1) A schedule for the establishment of the lanes. The schedule for the lanes required by paragraph (d) of this section shall provide for the first such lane to be set aside no later than June 1, 1974.

(2) Bus/carpool lanes must be prominently indicated by overhead signs at appropriate intervals and at each intersection of entry ramps.

(3) Bus/carpool lanes must be prominently indicated by distinctive painted, pylon, or physical barriers.

(4) Vehicles using a bus/carpool lane shall have the right of way when crossing other portions of the road to enter or leave such lanes.

(5) At a minimum, the bus/carpool lanes so set aside shall operate from 6:30 a.m. to 9:30 a.m. and from 3:30 to 6:30 a.m. each weekday.

(g) No deviation from the system of bus/carpool lanes required under paragraphs (c) and (d) of this section shall be permitted except upon application made by the State of California to the Administrator at the time of submittal of compliance schedules and approved by him, which application must contain a satisfactory designation of alternate routes for the establishment of such lanes.

[38 FR 31254, Nov. 12, 1973]

§§52.264–52.268 [Reserved]

§52.269 Control strategy and regulations: Photochemical oxidants (hydrocarbons) and carbon monoxide.

(a) The requirements of subpart G of this chapter are not met because the plan does not provide for attainment and maintenance of the national standards for photochemical oxidants (hydrocarbons) and carbon monoxide in the San Francisco Bay Area, San Diego, Sacramento Valley, San Joaquin Valley, and Southeast Desert Intrastate Regions by May 31, 1975.

(b) The following regulatory changes represent a relaxation of previously submitted regulations, and an adequate control strategy demonstration has not been submitted showing that the relaxation would not interfere with the attainment and maintenance of the national standards for photochemical oxidants.

(1) Mountain Counties Intrastate Region.

(i) Calaveras County APCD.

(A) The revocation of Rule 412, Organic Liquid Loading, is disapproved. Rule 412 submitted on June 30, 1972 and previously approved in 40 CFR 52.223 is retained.

(B) The revocation of Rule 413, Effluent Oil Water Separators, is disapproved; and Rule 413 submitted on June 30, 1972 and previously approved in 40 CFR 52.223 is retained.

(ii) Tuolumne County APCD.

(A) The revocation of Rule 413, Organic Liquid Loading, is disapproved; and Rule 413 submitted on June 30, 1972 and previously approved in 40 CFR 52.223 is retained.

(B) The revocation of Rule 414, Effluent Oil Water Separators, is disapproved; and Rule 414 submitted on June 30, 1972 and previously approved in 40 CFR 52.223 is retained.

(C) The revocation of Rule 413, Organic Liquid Loadings, submitted February 10, 1977, is disapproved; and the previously approved Rule 413 submitted on June 30, 1972 remains in effect.

(D) The revocation of Rule 414, Effluent Oil Water Separators, submitted on February 10, 1977, is disapproved; and the previously approved Rule 414 submitted on June 30, 1972, remains in effect.

(1–1) San Joaquin Valley Intrastate Region.

(i) Stanislaus County APCD.

(A) Rule 411.1, submitted on November 4, 1977, is disapproved. Rule 411.1 submitted on April 21, 1976 remains in effect.

(ii) Merced County APCD.

(A) Rule 411.1, submitted on November 4, 1977, is disapproved. Rule 411.1, submitted on August 2, 1976, remains in effect.

(iii) Fresno County APCD.

(A) Rules 411.1, Gasoline Transfer Into Vehicle Fuel Tanks, submitted on November 4, 1977, is disapproved; and Rule 411.1 submitted on April 21, 1976, and previously approved under 40 CFR 52.223, is retained.

(iv) Tulare County APCD.

(A) Section 412.1, Transfer of Gasoline Into Vehicle Fuel Tanks, submitted on October 13, 1977, is disapproved; and Section 412.1, submitted on April 21, 1976, and previously approved under 40 CFR 52.223, is retained.

(v) Madera County APCD.

(A) Rule 412.1, Transfer of Gasoline Into Stationary Storage Containers, submitted on October 13, 1977, is disapproved; and Rules 411, Gasoline Storage and 411.1, Transfer of Gasoline Into Stationary Storage Containers, submitted on June 30, 1972, and April 10, 1976, respectively, and previously approved under 40 CFR 52.223 are retained.

(vi) San Joaquin County APCD.

(A) Rule 411.2, Transfer of Gasoline Into Vehicle Fuel Tanks, submitted on November 4, 1977, is disapproved; and rule 411.2, submitted on February 10, 1976 and previously approved under 40 CFR 52.223, is retained.

(2) Sacramento Valley intrastate region:

(i) Sacramento County APCD.

(A) Rule 13 submitted on November 4, 1977, is disapproved.

(ii) Placer County APCD.

(A) Rule 218, Architectural Coatings, adopted on May 20, 1985 and submitted to EPA on February 10, 1986 is disapproved. The version of this rule by the same number and title submitted on July 19, 1983 and approved by EPA on May 3, 1984 is retained.

(iii) Sutter County APCD.

(A) Rule 3.15, Architectural Coatings, adopted on October 15, 1985 and submitted to EPA on February 10, 1986 is disapproved. The version of this rule by the same number and title submitted on January 1, 1981 and approved by EPA on May 3, 1982 is retained.

(3) Southeast Desert Intrastate AQCR.

(i) Los Angeles County APCD.

(A) Regulation IV, rule 465, Vacuum Producing Devices or Systems, submitted on June 6, 1977, is disapproved. Rule 74 with the same title, submitted on June 6, 1977, is disapproved. Rule 69 with the same title, submitted on June 30, 1972 and approved under 40 CFR 52.223, is retained.

(ii) Riverside County APCD.

(A) Regulation IV, rule 465, Vacuum Producing Devices or Systems, submitted on June 6, 1977, is disapproved. Rule 74 with the same title, submitted on June 30, 1972 and approved under 40 CFR 52.223, is retained.

(B) Rule 461, Gasoline Transfer and Dispensing, submitted November 4, 1977, is disapproved. The version of this rule submitted on April 21, 1977 (same number and title), which was previously approved in 40 CFR 52.223, is retained.

(4) Great Basin Valleys Intrastate Region.

(i) Great Basin Unified APCD.

(A) Rule 418 submitted on November 4, 1977, is disapproved. Rule 418 submitted on April 21, 1976 remains in effect.

(B) Rule 419, Gasoline Loading into Stationary Tanks, submitted on June 22, 1978, is disapproved, and rule 419, submitted April 21, 1976, and previously approved in 40 CFR 52.223, is retained.

(c) The following rules and regulations are disapproved because they represent a relaxation of promulgated EPA regulations, and an adequate control strategy demonstration has not been submitted showing that the relaxation would not interfere with the attainment and maintenance of the national standrds for photochemical oxidants:

(1) Sacramento Valley Intrastate AQCR.

(i) Yolo-Solano APCD.

(A) Rules 2.21(b)(1), 2.21(b)(2), 2.21(b)(4), 2.21(b)(5) and 2.21(b)(6), submitted on June 6, 1977.

(d) Imperial County APCD Rule 415, Gasoline Loading from Tank Trucks and Trailers, submitted by the State on November 4, 1977 is approved as applicable to facilities installed after July 1, 1977. District Rule 125, Gasoline Loading into Tank Trucks and Trailers and Rule 129, Gasoline loading into Tanks, submitted on February 21, 1972 and previously approved under 40 CFR 52.223 are retained as part of the State implementation plan, as applicable to facilities installed prior to July 1, 1977.

(e) The emission reduction credits for the following control measures contained in Ventura County's 1982 Ozone nonattainment area plan, submitted by the Governor's designee on December 31, 1982, are disapproved since the control measures are of an intermittent and voluntary nature and are therefore not approvable under Sections 110(a)(2)(F)(v) and 123 of the Clean Air Act: R–38/N–16, ''No Use Day''; R–39/N–17, ''No Drive Day''; R–40, ''No Spray Day''; R–41/N–18 ''Stationary Source Curtailments.''

[38 FR 16564, June 22, 1973. Redesignated at 40 FR 3767, Jan. 24, 1975]

EDITORIAL NOTE: For FEDERAL REGISTER citations affecting § 52.269, see the List of CFR Sections Affected in the Finding Aids section of this volume.

§ 52.270 Significant deterioration of air quality.

(a) With the exception of the areas listed in paragraph (b) of this section:

(1) The requirements of Sections 160 through 165 of the Clean Air Act are not met in California.

(2) The plan does not include approvable procedures for preventing the significant deterioration of air quality.

(3) The provisions of § 52.21(b) through (w) are hereby incorporated and made a part of the applicable state plan for the State of California.

(b) *District PSD Plans.* (1) The PSD rules for the Sacramento County Air Pollution Control District are approved under Part C, Subpart 1, of the Clean Air Act. However, EPA is retaining authority to apply § 52.21 in certain cases. The provisions of § 52.21 (b) through (w) are therefore incorporated and made a part of the state plan for California for the Sacramento County Air Pollution Control District for:

(i) Those cogeneration and resource recovery projects which are major stationary sources or major modifications under § 52.21 and which would cause violations of PSD increments.

(ii) Those projects which are major stationary sources or major modifications under § 52.21 and which would either have stacks taller than 65 meters or would use ''dispersion techniques'' as defined in § 51.1.

(iii) Sources for which EPA has issued permits under § 52.21, including the following permit and any others for which applications are received by June 19, 1985.

Procter & Gamble, SAC 83–01, 5/6/83.

(2) The PSD rules for the North Coast Unified Air Quality Management District are approved under Part C, Subpart 1, of the Clean Air Act. However, EPA is retaining authority to apply § 52.21 in certain cases. The provisions of § 52.21 (b) through (w) are therefore incorporated and made a part of the state plan for California for the North Coast Unified Air Quality Management District for:

(i) Those cogeneration and resource recovery projects which are major stationary sources or major modifications under § 52.21 and which would cause violations of PSD increments.

(ii) Those projects which are major stationary sources of major modifications under § 52.21 and which would either have stacks taller than 65 meters or would use ''dispersion techniques'' as defined in § 51.1.

(iii) Sources for which EPA has issued permits under § 52.21, including the following permits and any others for which applications are received by July 31, 1985;

(A) Arcata Lumber Co. (NC 78–01; November 8, 1979),

(B) Northcoast Paving (NC 79–03; July 5, 1979),

(C) PG&E Buhne Pt. (NC 77–05).

(3) The PSD rules for the Mendocino County Air Pollution Control District are approved under Part C, Subpart 1, of the Clean Air Act. However, EPA is retaining authority to apply § 52.21 in certain cases. The provisions of § 52.21 (b) through (w) are therefore incorporated and made a part of the state plan for California for the Mendocino County Air Pollution Control District for:

(i) Those cogeneration and resource recovery projects which are major stationary sources or major modifications under § 52.21 and which would cause violations of PSD increments.

(ii) Those projects which are major stationary sources or major modifications under § 52.21 and which would either have stacks taller than 65 meters or would use ''dispersion techniques'' as defined in § 51.1.

(iii) Any sources for which EPA has issued permits under § 52.21, including any permits for which applications are received by July 31, 1985.

(4) The PSD rules for the Northern Sonoma County Air Pollution Control District are approved under Part C, Subpart 1, of the Clean Air Act. However, EPA is retaining authority to apply § 52.21 in certain cases. The provisions of § 52.21 (b) through (w) are therefore incorporated and made a part of the state plan for California for the Northern Sonoma County Air Pollution Control District for:

(i) Those cogeneration and resource recovery projects which are major stationary sources or major modifications under § 52.21 and which would cause violations of PSD increments.

(ii) Those projects which are major stationary sources or major modifications under § 52.21 and which would either have stacks taller than 65 meters

or would use ''dispersion techniques'' as defined in § 51.1.

(iii) Any sources for which EPA has issued permits under § 52.21, including any permits for which applications are received by July 31, 1985.

[50 FR 25419, June 19, 1985, as amended at 50 FR 30943, July 31, 1985]

§ 52.271 Malfunction regulations.

(a) The following regulations are disapproved because they would permit the exemption of sources from the applicable emission limitations and therefore do not satisfy the enforcement imperatives of section 110 of the Clean Air Act.

(1) Amador County APCD.

(i) Rule 404, submitted on April 21, 1976.

(ii) Rule 4f, submitted on June 30, 1972, and previously approved under 40 CFR 52.223 (37 FR 19812).

(2) Bay Area APCD.

(i) Regulation 2, Section 3212, and Regulation 3, Section 3203, submitted on April 21, 1976.

(ii) Regulation 2, Section 3212, submitted on February 21, 1972, and previously approved under 40 CFR 52.223 (37 FR 10842).

(3) Calaveras County APCD.

(i) Rules 110 and 402(f), submitted on July 25, 1973.

(ii) Rule 404, submitted on October 13, 1977.

(4) Colusa County APCD.

(i) Rule 4.4g, submitted on July 25, 1973, and Rule 4.4g, submitted on June 30, 1972, and previously approved under 40 CFR 52.223 (37 FR 19812).

(5) Del Norte County APCD.

(i) Rule 540, submitted on November 10, 1976.

(ii) Rule 45, submitted on February 21, 1972, and previously approved under 40 CFR 52.223 (37 FR 10842).

(6) Fresno County APCD.

(i) Rule 110, submitted on June 30, 1972, and previously approved under 40 CFR 52.223.

(ii) Rules 110 and 402(f), submitted on October 23, 1974.

(7) Glenn County APCD.

(i) Rules 95.2 and 95.3, submitted on January 10, 1975.

(8) Great Basin Unified APCD.

(i) Rule 403, submitted on June 6, 1977.

(ii) Rule 617, submitted on November 4, 1977.

(9) Humboldt County APCD.

(i) Rule 540, Submitted on November, 10, 1976.

(ii) Rule 59, Submitted on February 21, 1972 and previously approved under 40 CFR 52.223 (37 FR 10842).

EDITORIAL NOTE: At 46 FR 27118, May 18, 1981, the following paragraph (a)(9) was added to § 52.271.

(9) Monterey Bay Unified APCD.

(i) Rule 214, submitted on March 4, 1980.

(ii) Rule 617, submitted on May 23, 1979.

(10) Kern County APCD.

(i) Rule 111, submitted on July 19, 1974.

(11) Kings County APDC.

(i) Rule 111, submitted on July 25, 1973, and Rule 111, submitted on July 30, 1972, and previously approved under 40 CFR 52.223.

(ii) Rule 111, submitted on November 4, 1977.

(12) Lake County APCD.

(i) Chapter III, Article I, Section 500, and Article II, Sections 510 and 511, submitted on February 10, 1977.

(ii) Part VI, Sections 1 and 2, submitted on June 30, 1972, and previously approved under 40 CFR 52.223.

(13) Los Angeles County APCD.

(i) Rule 430, submitted on June 6, 1977.

(14) Madera County APCD.

(i) Rule 402(f), submitted on January 10, 1975, and Rule 110, submitted on June 30, 1972, and previously approved under 40 CFR 52.223.

(ii) Rule 110, submitted on January 10, 1975.

(15) Mariposa County APCD.

(i) Rule 203(j), submitted on January 10, 1975, and Rule 4.3(g), submitted on February 21, 1972, and previously approved under 40 CFR 52.223.

(ii) Rule 404, submitted on June 6, 1977.

(16) Mendocino County APCD.

(i) Rule 540, submitted on November 10, 1976.

(ii) Sections 1 and 2 of Part VI, submitted on February 21, 1972, and previously approved under 40 CFR 52.223 (37 FR 10842).

(17) Merced County APCD.

(i) Rule 109, submitted on August 2, 1976.

(ii) Rule 109, submitted on June 30, 1972, and previously approved under 40 CFR 52.223 (37 FR 19812).

(18) Nevada County APCD.

(i) Rule 55(f), submitted on February 21, 1972, and previously approved under 40 CFR 52.223 (37 FR 10842).

(19) Northern Sonoma County APCD.

(i) Rule 540, submitted on November 10, 1976.

(20) Placer County APCD.

(i) Rule 55(f), submitted on February 21, 1972, and previously approved under 40 CFR 52.223 (37 FR 10842).

(ii) Rule 404, submitted on October 13, 1977.

(21) Plumas County APCD.

(i) Rule 203(j), submitted on January 10, 1975.

(ii) Rule 404, submitted on June 6, 1977.

(22) Riverside County APCD.

(i) Rule 430, submitted on June 6, 1977.

(23) San Bernardino County APCD.

(i) Rule 430, submitted on June 6, 1977.

(ii) Rule 55, submitted on February 21, 1972, and previously approved under 40 CFR 52.223 (37 FR 10842).

(24) San Joaquin County APCD.

(i) Rule 110, submitted on October 23, 1974, and Rule 110, submitted on June 30, 1972, and previously approved under 40 CFR 52.223 (37 FR 19812).

(25) San Luis Obispo County APCD.

(i) Rule 107, submitted on November 10, 1976.

(ii) Rule 102, submitted on February 21, 1972, and previously approved under 40 CFR 52.223 (37 FR 10842).

(26) Shasta County APCD.

(i) Rule 3:10, submitted on July 19, 1974.

(ii) Rule 3:10, submitted on June 30, 1972, and previously approved under 40 CFR 52.223 (37 FR 19812).

(27) Sierra County APCD.

(i) Rule 51, submitted on June 30, 1972, and previously approved under 40 CFR 52.223 (37 FR 19812), and Rule 203(j), submitted on January 10, 1975, and previously approved under 40 CFR 52.223 (42 FR 23805).

(ii) Rule 404, submitted on June 6, 1977.

(28) Southern California APCD.

(i) Rule 430, submitted on February 10, 1977.

(29) Stanislaus County APCD.

(i) Rule 110, submitted on June 30, 1972, and previously approved under 40 CFR 52.223 (37 FR 19812), and Rule 110, submitted on July 19, 1974.

(30) Tehama County APCD.

(i) Rule 417, submitted on July 19, 1974.

(ii) Rule 4:1g, submitted on June 30, 1972, and previously approved under 40 CFR 52.223 (37 FR 19812).

(31) Trinity County APCD.

(i) Rule 540, submitted on November 10, 1976.

(ii) Rule 44, submitted on June 30, 1972, and previously approved under 40 CFR 52.223 (37 FR 19812).

(32) Tulare County APCD.

(i) Rules 111 and 402(f), submitted on November 10, 1976.

(33) Tuolumne County APCD.

(i) Rule 404, submitted on February 10, 1977, and Rule 402(f), submitted on June 30, 1972, and previously approved under 40 CFR 52.223.

(34) Ventura County APCD.

(i) Rule 32, submitted on July 19, 1974.

(ii) Rule 32, submitted on June 30, 1972, and previously approved under 40 CFR 52.223 (37 FR 19812).

(35) Yuba County APCD.

(i) Rule 4.5, submitted on July 25, 1973.

(b) The following regulations are disapproved since they lack explicit provisions to assure that that NAAQS will not be exceeded while equipment breakdown periods are in effect.

(1) Fresno County APCD.

(i) Rules 110(B), *Variance Required,* and 519, *Emergency Variance,* submitted on January 2, 1979.

(2) Kern County APCD.

(i) Rules 111 (b), *(Equipment Breakdown),* and 519, *Emergency Variance,* submitted on January 2, 1979.

(3) Modoc County APCD.

(i) Rule 2:15, *Breakdown Conditions; Emergency Variances,* submitted on May 7, 1979.

(4) Imperial County APCD.

(i) Rule 111 (B), *Equipment Breakdown,* submitted on December 24, 1979.

(ii) Rule 517, *Emergency Variance,* submitted on December 24, 1979.

[43 FR 3277, Jan. 24, 1978]

EDITORIAL NOTE: For FEDERAL REGISTER citations affecting § 52.271, see the List of CFR Sections Affected in the Finding Aids section of this volume.

§ 52.272 Research operations exemptions.

(a) The requirements of § 51.281 of this chapter are not met because the following regulations allow exemptions to be granted from the applicable emission limitations, thereby potentially rendering the applicable limitations unenforceable. Furthermore, the regulations are inconsistent with the Clean Air Act, because the regulations could permit violations of the National Ambient Air Quality Standards under some circumstances. Therefore, the following regulations are disapproved:

(1) Bay Area APCD.

(i) Regulation 2, Division 1, sections 1214 to 1214.3, submitted on July 25, 1973.

(ii) Regulation 3, Division 1, sections 1205 to 1205.3, submitted on July 25, 1973.

(2) El Dorado County APCD.

(i) Rule 203(D), submitted on November 4, 1977.

(3) Great Basin Unified APCD.

(i) Rule 423, submitted on November 4, 1977.

(4) Los Angeles County APCD.

(i) Rule 441, submitted on June 6, 1977.

(5) Placer County APCD.

(i) Rule 203(D), submitted on October 13, 1977.

(6) Riverside County APCD.

(i) Rule 441, submitted on June 6, 1977.

(7) Sacramento County APCD.

(i) Rule 30, submitted on January 22, 1974.

(8) San Bernardino County APCD.

(i) Rule 441, submitted on June 6, 1977.

(9) Southern California APCD.

(i) Rule 441, submitted on August 2, 1976.

[42 FR 42226, Aug. 22, 1977]

EDITORIAL NOTE: For FEDERAL REGISTER citations affecting § 52.272, see the List of CFR Sections Affected in the Finding Aids section of this volume.

§ 52.273 Open burning.

(a) The following rules or portions of rules are disapproved because they contain exemptions to open burning (including open agricultural burning) prohibitions, that do not satisfy the requirements of section 110 of the Clean Air Act:

(1) Amador County APCD.

(i) Rules 308 and 312, submitted on April 21, 1976.

(ii) Rule 304, submitted on October 13, 1977.

(iii) Rules 302(G) and 322, submitted on October 15, 1979.

(2) Calaveras County APCD.

(i) Rules 304 and 322, submitted on October 13, 1977.

(3) Del Norte County APCD.

(i) Rule 410(c)(2) and the following portions of Regulation 2: General prohibitions (all of page 1), paragraph (f) of Article I, paragraphs (f) and (g) of Article V, and paragraph (f) of Article VI, submitted on November 10, 1976.

(4) El Dorado County APCD.

(i) Rules 302(C), 304, 307, 319, and 322, submitted on November 4, 1977.

(ii) Rules 302 (C), 318, and 321, submitted on May 23, 1979.

(5) Fresno County APCD.

(i) Rules 416.1(e)(1), (e)(3), and (e)(4), submitted on October 23, 1974.

(ii) Rule 416.1(c)(1), submitted on June 30, 1972, and previously approved under 40 CFR 52.223 (37 FR 19812).

(6) Humboldt County APCD.

(i) Rule 410(c)(2) and the following portions of Regulation 2: General prohibitions (all of page 1), paragraph (f) of Article I, paragraphs (f) and (g) of Article V, and paragraph (f) of Article VI, submitted on November 10, 1976.

(ii) (A)–(C) [Reserved]

(D) Rules 312 (B) and (C), and 401 (D.1) and (D.2).

(7) Kern County APCD.

(i) Rule 417(I)(A), submitted on November 10, 1976.

(8) Madera County APCD.

(i) Rules 416.1(e)(1), (e)(3), and (e)(4), submitted on January 10, 1975.

(ii) Rule 416.1(c)(1), submitted on June 30, 1972, and previously approved under 40 CFR 52.223 (37 FR 19812).

(9) Mariposa County APCD.

(i) Rules 302(C), 304, 319, and 322, submitted on June 6, 1977.

(10) Mendocino County APCD.

(i) Rule 410(c)(2) and the following portions of Regulation 2: General prohibitions (all of page 1), paragraph (f)

of Article I, paragraphs (f) and (g) of Article V, and paragraph (f) of Article VI, submitted on November 10, 1976.

(11) Merced County APCD.

(i) Rule 416(h), submitted on August 2, 1976.

(ii) Rules 416.1(III)(A), (V)(A), (V)(B), (V)(C), and (V)(D), submitted on August 2, 1976. (Rule 416.1(c)(2), submitted on June 30, 1972, and previously approved, is retained. Rule 416.1(a)(1), submitted on June 30, 1972, and previously approved, is retained for the purpose of enforcing Rule 416.1(c)(2).)

(12) Monterey Bay Unified APCD.

(i) Rules 409(a), 409(a)(5), and 410(b)(1), submitted on January 10, 1975.

(13) Nevada County APCD.

(i) Rules 302(C), 307, 314, and 322, submitted on April 10, 1975.

(ii) Rules 304 and 319, submitted on June 6, 1977.

(iii) Rule 307, submitted on October 15, 1979.

(14) Northern Sonoma County APCD.

(i) Rule 410(c)(2) and the following portions of Regulation 2: General prohibitions (all of page 1), paragraph (f) of Article I, paragraphs (f) and (g) of Article V, and paragraph (f) of Article VI, submitted on November 10, 1976.

(15) Placer County APCD.

(i) Rules 302(C), 302(G), 304, 307, 314, 319, and 322, submitted on October 13, 1977.

(ii) Rules 303, 306, and 322, submitted on October 15, 1979.

(16) Plumas County APCD.

(i) Rule 314, submitted on January 10, 1975.

(ii) Rules 302(C), 304, 307, 319, and 322, submitted on June 6, 1977.

(17) Sacramento County APCD.

(i) Rule 96(a), submitted on November 10, 1976.

(ii) Rule 96(a), submitted on November 4, 1977.

(18) San Joaquin County APCD.

(i) Rule 402(e), submitted on November 10, 1976.

(ii) Rule 416.1(c)(1), submitted on June 30, 1972, and previously approved under 40 CFR 52.223 (37 FR 19812).

(iii) Rules 416.1(D)(1) and (D)(2), submitted on October 23, 1974.

(19) Santa Barbara County APCD.

(i) Rules 40(4)(a) and 40(4)(1), submitted on July 25, 1973. (The analogous Rules 40(4)(a) and 40(4)(g), previously approved in the February 21, 1972 submittal, are retained.) Rule 40(4)(c), submitted on July 25, 1973, is also disapproved.

(ii) Rule 22, submitted on January 22, 1974. (The analogous Rule 22, previously approved in the February 21, 1972 submittal, is retained.) Rules 24.1 and 24.2, submitted on January 22, 1974, are also disapproved.

(20) Shasta County APCD.

(i) Rule 2:6, sections (1)(b)(iii) (a, b, and d), (1)(c)(viii), 2(c), 3(f), 4(e), 5(c), and 5(d). (Previously approved Rule 2:6, sections (2)(c), (3)(f), and (4)(e), submitted on July 19, 1974, are retained.)

(21) Sierra County APCD.

(i) Rules 302(C), 319, and 322, submitted on June 6, 1977.

(22) Trinity County APCD.

(i) Rule 410(c)(2) and the following portions of Regulation 2: General prohibitions (all of page 1), paragraph (f) of Article I, paragraphs (f) and (g) of Article V, and paragraph (f) of Article VI, submitted on November 10, 1976.

(23) Tulare County APCD.

(i) Rule 402(e), submitted on November 10, 1976.

(ii) Section 417(III)(A), submitted on June 30, 1972, and previously approved under 40 CFR 52.223 (37 FR 19812).

(iii) Section 417.1(e)(1), (e)(3), and (e)(4), submitted on January 10, 1975.

(24) Tuolumne County APCD.

(i) Rule 322, submitted on February 10, 1977.

(25) Yolo-Solano APCD.

(i) Rules 2.8(c) (4) and (5), 6.3, and 6.5(a), submitted on July 25, 1973.

(ii) Rules 6.1(a), (e)(6), and (g), submitted on January 10, 1975. (Rules 4.1 (a) and (g), submitted on February 21, 1972, and previously approved under 40 CFR 52.223, are retained.)

(b) The following rules or portions of rules are disapproved because they relax the control on open burning (including agricultural burning) without accompanying analyses demonstrating that these relaxations will not interfere with the attainment and maintenance of the National Ambient Air Quality Standards:

(1) Del Norte County APCD.

(i) Regulation 2, Article I, paragraph (e), submitted on November 10, 1976.

(ii) Rule 410(c)(2), submitted on May 7, 1979.

(2) Fresno County APCD.

(i) Rule 416.1(c)(1), submitted on October 23, 1974.

(ii) Rule 416.1(g), submitted on November 4, 1977.

(3) Humboldt County APCD.

(i) Regulation 2, Article I, paragraph (e), submitted on November 10, 1976.

(ii) Rule 410(c)(2), submitted on May 7, 1979.

(4) Imperial County APCD.

(i) Rule 422, submitted on November 4, 1977. (The requirements of Rule 115, submitted on February 21, 1972, and previously approved under 40 CFR 52.223, are retained as applicable to the burning of wood waste.)

(ii) Regulation VII (Rules 701 to 706), submitted on November 4, 1977. (Regulation VII (Rules 200 to 206), submitted on July 25, 1973 and previously approved under 40 CFR 52.223, is retained.)

(5) Kings County APCD.

(i) Rules 416.1 and 417.1, submitted on November 4, 1977.

(6) Lake County APCD.

(i) Sections 435, 436, 1003, and 1200(A), submitted on February 10, 1977.

(ii) Section 435, submitted on January 2, 1979.

(7) Los Angeles County APCD.

(i) Rule 444, submitted on June 6, 1977. (Rules 57.1, 57.2, 57.3, and 57.4, submitted on June 30, 1972, and previously approved under 40 CFR 52.223, are retained.)

(8) Madera County APCD.

(i) Rule 416.1(c)(1), submitted on January 10, 1975.

(9) Mendocino County APCD.

(i) Regulation 2, Article I, paragraph (e), submitted on November 10, 1976.

(ii) Rule 410(c)(2), submitted on May 7, 1979.

(10) Merced County APCD.

(i) Rule 416.1(I)(A)(2), submitted on August 2, 1976.

(11) Northern Sonoma County APCD.

(i) Regulation 2, Article I, paragraph (e), submitted on November 10, 1976.

(ii) Rule 410(c)(2), submitted on May 7, 1979.

(12) San Bernardino County Desert APCD.

(i) Rule 444 and the definition of ''Agricultural Burning'' in Rule 102, submitted on November 4, 1977. (Rule 57, submitted on February 21, 1972, and previously approved under 40 CFR 52.223, is retained.)

(13) San Diego County APCD.

(i) Rules 102(e) and 103(g), submitted on October 13, 1977.

(14) San Luis Obispo County APCD.

(i) Rule 501(B), submitted on November 10, 1976, and Rule 501(A)(7), submitted on November 4, 1977. (Previously approved Rule 115(2), submitted on February 21, 1972, is retained.)

(15) Santa Barbara County APCD.

(i) Rules 2(b), 40(3), and 40(4)(e), submitted on July 25, 1973. (Analogous Rules 2(b), 40(3), and 40(4)(c), submitted on February 21, 1972, and previously approved, are retained.)

(16) Shasta County APCD.

(i) Rule 2:8, submitted on October 13, 1977. (Rule 2:8, submitted on July 19, 1974, and July 22, 1975, and previously approved, is retained.)

(17) Siskiyou County APCD.

(i) Rule 4.3(2), submitted on January 2, 1979.

(18) Trinity County APCD.

(i) Regulation 2, Article I, paragraph (e), submitted on November 10, 1976.

(ii) Rule 410(c)(2), submitted on May 7, 1979.

(19) Placer County APCD.

(i) Rule 316, submitted on August 21, 1979.

(ii) Rules 318 and 323, submitted on October 15, 1979.

[42 FR 41122, Aug. 15, 1977]

EDITORIAL NOTE: For FEDERAL REGISTER citations affecting § 52.273, see the List of CFR Sections Affected in the Finding Aids section of this volume.

§ 52.274 California air pollution emergency plan.

(a) Since the California Air Pollution Emergency Plan does not provide complete, implementable provisions for taking emission control actions necessary to prevent ambient pollutant concentrations from reaching significant harm levels, the requirements of subpart H of this chapter for Priority I and II areas are not met, except in the following areas:

(1) South Coast Air Quality Management District (SCAQMD).

(2) Sacramento County Air Pollution Control District.

(3) Monterey Bay Unified APCD (MBUAPCD).

(4) Santa Barbara Air Quality Management Area portion of the Santa Barbara County Air Pollution Control District.

(5) Bay Area Air Quality Management District.

(6) Ventura County Air Pollution Control District.

(7) San Diego County APCD.

(8) Los Angeles County Air Pollution Control District.

(9) Riverside County Air Pollution Control District.

(10) San Bernardino County Desert Air Pollution Control District.

(11) Imperial County Air Pollution Control District.

(12) Fresno County Air Pollution Control District.

(13) Kern County Air Pollution Control District.

(b) The requirements of subpart H of this chapter are met in the SCAQMD with the following exceptions: SCAQMD Regulation VII has no schedule to assure that the emission control actions are fully implementable; does not provide specific emission control actions for interdistrict coordination; has no provisions for nitrogen dioxide, particulate matter, and sulfur dioxide and particulate matter combined episodes; has no criteria or provisions to protect the eight-hour averaged carbon monoxide significant harm level; and has no provisions for implementation of abatement plans for stage 2 or 3 carbon monoxide or oxidant episodes that are attained without being predicted.

(c) Regulation for prevention of air pollution emergency episodes—plan scheduling, interdistrict coordination, episode criteria, and declaration.

(1) The requirements of this paragraph are applicable in the SCAQMD.

(2) The owner or operator of any governmental, industrial, business, or commercial activity listed in Rules 708.1 and 708.3 of Regulation VII of the SCAQMD, as revised on May 6, 1977, shall submit a Stationary Source Curtailment Plan and/or Traffic Abatement Plan to the Administrator within sixty days after the effective date of this paragraph.

(3) The plans submitted pursuant to the requirements of this paragraph, shall be reviewed by the Administrator for approval or disapproval according to the following schedule:

(i) For sources with emissions of hydrocarbons (HC) or nitrogen oxides (NO_x) greater than or equal to 454 metric tons (500 tons) per year, or for establishments employing 400 or more employees per shift, within 45 days after receipt.

(ii) For sources with emissions of HC or NO_x greater than or equal to 91 metric tons (100 tons) per year and less than 454 metric tons (500 tons) per year, or for establishments employing more than 200 and less than 400 employees per shift, within 90 days after receipt.

(iii) For sources or establishments other than those addressed in paragraphs (c)(3) (i) through (ii) of this section, within 180 days after receipt.

(4) The owner or operator of an industrial, business, governmental or commercial establishment required to submit a plan by this paragraph shall be notified by the Administrator within thirty days after the plan has been evaluated if the plan is disapproved. Any plan disapproved by the Administrator shall be modified to overcome the disapproval and resubmitted to the Administrator within 30 days of the receipt of the notice of disapproval.

(5) In the event specific sources or source areas within the SCAQMD are determined to significantly contribute to a declared air pollution episode in a nearby Air Pollution Control District, emission control actions specified in Regulation VII of the SCAQMD, as revised on May 6, 1977, for that declared episode stage shall be taken in the SCAQMD to abate that episode.

(6) For the purposes of this paragraph, the following episode criteria shall apply to carbon monoxide concentrations averaged over eight hours:

(i) For stage 1, 15 parts per million.

(ii) For stage 2, 30 parts per million.

(iii) For stage 3, 40 parts per million.

(7) The provisions of SCAQMD Regulation VII, as revised on May 6, 1977, relating to carbon monoxide episodes averaged over 12 hours shall apply to carbon monoxide episodes averaged over 8 hours except that the Administrator shall provide for declaration, notification, source inspections, and termination of the episodes.

(8) Whenever the Administrator has determined that the stage 2 or 3 episode level for oxidant or carbon monoxide as specified in Rule 703 of Regulation VII of the SCAQMD, as amended May 6, 1977, is being attained or has been attained, and is predicted to remain at such level for 12 or more hours, or increase, or in the case of oxidant to reoccur within the next 24 hours, unless control actions are taken, the existence of the appropriate episode level and the location of the source-receptor areas shall be declared, and the actions specified in Rules 710(b)(1), 710(b)(2), 711(b)(1), or 711(b)(2) shall be taken by the Administrator.

(d) Regulation for prevention of air pollution emergency episodes—nitrogen dioxide, particulate matter, and sulfur dioxide and particulate matter combined.

(1) The requirements of this paragraph are applicable in the SCAQMD.

(2) For the purposes of this regulation the following definitions apply:

(i) ''Ppm'' means parts per million by volume.

(ii) ''COH'' means coefficient of haze.

(iii) ''Ugm^3'' means micrograms per cubic meter.

(iv) ''Administrator'' means the Administrator of the Environmental Protection Agency or his authorized representative.

(v) ''Major National Holiday'' means a holiday such as Christmas, New Year's Day, or Independence Day.

(vi) ''Source/Receptor Areas'' are defined for each episode occurrence based on air monitoring, geographical, and meteorological factors: Source area is that area in which contaminants are discharged and a receptor area is that area in which the contaminants accumulate and are measured.

(vii) ''Air Contaminants'' means nitrogen dioxide, particulate matter, and/or sulfur dioxide and particulate matter combined.

(3) For the purposes of this regulation, the following episode criteria shall apply:

Contaminants	Averaging time (hours)	Stage 1	Stage 2	Stage 3
Nitrogen dioxide	1	0.6 ppm	1.2 ppm	1.6 ppm.
	24	0.15 ppm	0.3 ppm	0.4 ppm.
Particulate matter	24	3.0 COH	5.0 COH	7.0 COH.
	24	375 ugm^{-3}	625 ugm^{-3}	875 ugm^{-3}.
Sulfur dioxide and particulate matter combined	24	0.2[1]	0.8[1]	1.2[1].
	24	65,000[2]	261,000[2]	393,000[2].

[1] Product of sulfur dioxide (ppm) and particulate matter (COH).
[2] Product of sulfur dioxide (ugm^{-3}) and particulate matter (ugm^{-3}).

(4) Whenever the Administrator has determined that any episode level specified in paragraph (d)(3) of this section is being attained or has been attained, and is predicted to remain at such level for 12 or more hours, or increase, unless control actions are taken, the existence of the appropriate episode level and the location of the source-receptor areas shall be declared.

(5) Whenever the available scientific and meteorological data indicate that any episode level declared by paragraph (d)(4) of this section is no longer occurring and is not predicted to immediately increase again to episode levels, such episode shall be declared terminated.

(6) The following shall be notified by the Administrator whenever an episode is predicted, attained or terminated: (i) Public officials; (ii) persons operating any facility or activity named in paragraph (d)(8) of this section; (iii) public health, safety, and emergency agencies; (iv) news media.

(7) Upon request of the Administrator, persons operating any facility or activity named in paragraph (d)(8) of this section shall install, properly maintain, and operate radio-receiving equipment with decoding device capable of receiving broadcasts of the declaration and termination of episodes required under this paragraph and instructions as to the actions to be taken.

(8) Stationary source curtailment plans and traffic abatement plans shall be prepared by industrial, business,

commercial, and governmental establishments as follows:

(i) The owner or operator of any industrial, business, commercial, or governmental activity listed below shall submit to the Administrator plans to curtail operations causing stationary source air contaminants in such activity:

(A) Petroleum refinery emitting 23 metric tons (25 tons) or more per year of air contaminants.

(B) Metal-melting plant requiring molten metal temperatures in excess of 540° C (1,000° F) or metal-refining plant or metal-smelting plant, in which a total of 1,135 kilograms (2,500 pounds) or more of metal are in a molten state at any one time or are poured in any 1 hour.

(C) Fossil fuel-fired electric generating facility having a total rated capacity of 50 megawatts or more.

(D) Any facility or plant emitting 91 metric tons (100 tons) or more per year of air contaminants.

(ii) The plans required by paragraph (d)(8)(i) of this section shall include the following:

(A) A list of equipment which emits nitrogen oxides, particulate matter, and/or sulfur dioxide, including the SCAQMD permit number, the daily amount of air contaminants emitted, and a statement of the minimum time and recommended time to implement the abatement actions for each episode stage for the equipment listed and the percent reduction in emissions at each episode stage.

(B) The total number of employees at the facility during each shift on a normal weekday and on a major national holiday.

(C) The normal amount of electricity used on a normal weekday and on a major national holiday.

(D) The actions to inform employees of the procedures to be taken in the event of an episode declaration.

(E) The name and telephone numbers of the facility's episode action coordinator and alternate, who are responsible for implementation of the plan.

(F) For stage 1 episodes:

(*1*) The measures to voluntarily curtail equipment emitting air contaminants.

(*2*) The measures to curtail or postpone electrically intensive industrial operations, where feasible.

(*3*) The measures for electric utilities to import power from outside the basin to the extent feasible.

(G) For stage 2 episodes:

(*1*) The measures to curtail as much as possible, without upsetting production, equipment operations which emit air contaminants.

(*2*) The measures to postpone operations which can be postponed until after the episode.

(*3*) For fossil fuel-fired combustion sources, including electric utilities, with a heat input greater than 50 million BTU per hour:

(*i*) The measures to burn natural gas.

(*ii*) To the extent that natural gas is not available, the measures to burn fuel oil with a sulfur content of not more than 0.25 percent by weight or the measures to reduce air contaminant emissions to equivalent discharge. Any combustion source may be exempt from the provisions of this paragraph upon demonstration that fuel oil with the specified sulfur content is not available.

(*4*) For electric utilities the measures, in addition to those in paragraph (d)(8)(ii)(F)(*3*) of this section, to:

(*i*) Shift oil burning power generation to non-source areas to the maximum extent consistent with the public health, safety, and welfare.

(*ii*) Shift oil burning power generation to combined cycle gas turbine generating equipment burning fuel oil containing less than 0.15 percent sulfur to the maximum extent consistent with the public health, safety, and welfare.

(*5*) For refineries and chemical plants the measures to be taken to reduce air contaminant emissions by 20 percent without jeopardizing the public health or safety, without causing an increase in the emissions of other air contaminants, withoutdamaging the equipment or without reducing production by more than 20 percent.

(*6*) The measures in paragraph (d)(8)(ii)(F) of this section.

(H) For stage 3 nitrogen dioxide episodes:

(*1*) The measures for petroleum refineries to reduce emissions of nitrogen

dioxide by 33 percent, without damaging the equipment or increasing the emissions of other air contaminants.

(*2*) The measures in paragraph (d)(8)(ii)(G) of this section.

(*3*) A list of equipment and the permit numbers of such equipment not operated on a major national holiday.

(*4*) A statement as to whether or not the facility operates on a major national holiday.

(I) For stage 3 particulate matter episodes:

(*1*) The measures for petroleum refineries to reduce emissions of particulate matter by 33 percent, without damaging the equipment or increasing the emissions of other air contaminants.

(*2*) The measures described in paragraph (d)(8)(ii)(G) of this section.

(*3*) The measures for any facility or plant, except electrical generating facilities and petroleum refineries, normally emitting 91 metric tons (100 tons) or more per year of particulate matter to eliminate such emissions by starting no new batches, by ceasing feed of new materials, and by phasing down as rapidly as possible without damage to the equipment.

(*4*) The measures for metal melting, refining, or smelting plants to eliminate emissions of particulate matter by starting no new batches, by ceasing feed of new materials, and by phasing down as rapidly as possible without damage to the equipmen

(J) For stage 3 sulfur dioxide and particulate matter combined episodes:

(*1*) The measures described in paragraphs (d)(8)(ii) (G) and (I) of this section.

(*2*) The measures for petroleum refineries to reduce emissions of sulfur dioxide by 33 percent, without damaging the equipment or increasing the emissions of other air contaminants.

(*3*) The measures for any facility or plant, except electrical generating facilities and petroleum refineries, normally emitting 91 metric tons (100 tons) or more per year of sulfur dioxide to eliminate such emissions by starting no new batches, by ceasing feed of new materials, and by phasing down as rapidly as possible without damage to the equipment.

(K) An estimate of the resultant reduction in air contaminant emissions.

(iii) The owner or operator of any industrial, business, commercial, or governmental activity listed below shall submit to the Administrator plans to curtail or cease operations causing air contaminants from vehicle use:

(A) Operators of 50 or more fleet vehicles.

(B) Industrial, business, commercial, or governmental establishments employing more than 100 persons per shift at one business address.

(iv) The plans required by paragraph (d)(8)(iii) of this paragraph shall include the following:

(A) The total number of employees at the facility during each shift on a normal weekday and on a major national holiday.

(B) The number of motor vehicles and vehicle miles traveled for motor vehicles operated:

(*1*) By the company on company business on a normal weekday and on a major national holiday.

(*2*) By employees commuting from home to the place of business on a normal weekday and on a major national holiday.

(C) The number of parking spaces used on a normal weekday and on a major national holiday.

(D) The minimum number of motor vehicles to be operated that are necessary to protect public health or safety.

(E) The actions to inform employees of the procedures to be taken in the event of an episode declaration.

(F) The name and telephone numbers of the facility's episode action coordinator and alternate, who are responsible for implementation of the plan.

(G) For stage 1 episodes, the methods by which employers will encourage the utilization of car pools or otherwise reduce employee motor vehicle travel.

(H) For stage 2 and 3 episodes, the measures within the reasonable control of the employer to reduce the number of vehicle miles driven by employees in commuting to and from work.

(I) An estimate of the reduction in vehicle miles traveled as a result of the measures in this paragraph.

(v) Each owner or operator required to submit a plan by this paragraph shall submit to the Administrator such

plan within 60 days of the effective date of this paragraph.

(vi) The plans submitted in accordance with the provisions of this paragraph shall be approved or disapproved by the Administrator according to the following schedule:

(A) For sources with emissions of air contaminants greater than or equal to 454 metric tons (500 tons) per year, or for establishments employing 400 or more employees per shift, within 45 days after receipt.

(B) For sources with emissions of air contaminants greater than or equal to 91 metric tons (100 tons) per year and less than 454 metric tons (500 tons) per year, or for establishments employing more than 200 and less than 400 employees per shift, within 90 days after receipt.

(C) For sources with emissions of air contaminants less than 91 metric tons (100 tons) per year, or for establishments employing 100 to 200 employees per shift, within 180 days after receipt.

(vii) The owner or operator required to submit a plan by this paragraph shall be notified by the Administrator within 30 days after the plan has been evaluated if the plan is disapproved. Any plan disapproved by the Administrator shall be modified to

(viii) A copy of the plan approved in accordance with the provisions of this paragraph shall be on file and readily available on the premises to any person authorized to enforce the provisions of this section.

(9) The following actions shall be taken in the source and receptor areas upon declaration of a stage 1 episode:

(i) The notifications required by paragraph (d)(6) of this section.

(ii) The Administrator shall advise the public that those individuals with special health problems should follow the precautions recommended by their physicians and health officials.

(iii) The Administrator shall advise school officials to cancel, postpone, or reschedule programs which require outdoor physical activity.

(iv) The Administrator shall request the public to stop all unnecessary driving.

(v) The Administrator shall request the public to operate all privately owned vehicles on a pool basis.

(vi) Persons operating any facility or activity named in paragraph (d)(8) of this section shall implement the appropriate plans specified in paragraph (8) for the declared stage 1 episode and air contaminant(s).

(10) The following actions shall be taken in the source and receptor areas upon declaration of a stage 2 episode:

(i) The actions described in paragraphs (d)(9) (i) through (v) of this section.

(ii) The Administrator shall request suspension of programs that involve physical exertion by participants using public parks or public recreational facilities located in receptor areas.

(iii) The burning of combustible refuse shall be postponed until the episode has been terminated.

(iv) The Administrator shall request the public to reduce the use of electricity by 10 percent.

(v) Persons operating any facility or activity named in paragraph (d)(8) of this section shall implement the appropriate plans specified in paragraph (d)(8) of this section for the declared stage 2 episode and air contaminant(s).

(11) The following actions shall be taken in the source and receptor areas upon declaration of a stage 3 episode:

(i) The actions described in paragraphs (d)(10) (i) through (iii) of this section.

(ii) The Administrator shall request the public to reduce the use of electricity by 40 percent.

(iii) Persons operating any facility or activity named in paragraph (d)(8) of this section shall implement the appropriate plans specified in paragraph (d)(8) of this section for the declared stage 3 episode and air contaminant(s).

(iv) For nitrogen dioxide, the general public, schools, industrial, business, commercial, and governmental activities throughout the District shall operate as though the day were a major national holiday.

(v) For particulate matter and/or sulfur dioxide and particulate matter combined, the Administrator shall request the public to reduce as much as possible activities causing dust emissions including agricultural operations,

off-road vehicle use, anddriving on unpaved roads. Construction and demolition operation shall be postponed until the episode has been terminated.

(12) In the event specific sources or source areas within the SCAQMD are determined to significantly contribute to a declared air pollution episode in a nearby Air Pollution Control District, emission control actions specified in this paragraph for that declared episode stage shall be taken in the SCAQMD to abate that episode.

(13) A source inspection plan shall be implemented by the Administrator upon the declaration of any episode stage.

(14) The Administrator shall provide for daily acquisition of forecasts of atmospheric stagnation conditions during any episode stage and updating of such forecasts at least every 12 hours.

(15) Any source that violates any requirement of this section shall be subject to enforcement action under section 113 of the Act.

(16) All submittals or notifications required to be submitted to the Administrator by this section shall be sent to:

Environmental Protection Agency, Air and Hazardous Materials Division (A–4), Attn: Air Programs Branch, 215 Fremont Street, San Francisco, Calif. 94105.

(e) The requirements of subpart H of this chapter are met in the Sacramento County Air Pollution Control District with the following exceptions: There are no episode criteria levels, declaration procedures, notification procedures, source inspections, emission control actions or episode termination procedures for carbon monoxide episodes based on 4- and 8-hour averaging times; communication procedures for transmitting status reports and orders as to emission control actions to be taken during an episode stage are not provided for; there are no provisions for the inspection of those sources covered under Rule 122; there is no time schedule for the Air Pollution Control Officer to initiate the call for the submittal of individual abatement plans; the requirements for the content of the abatement plans are not sufficiently specific to ensure that adequate plans are submitted; no provisions exist for the daily acquisition of atmospheric stagnation conditions; a Priority II particulate matter episode contingency plan is not provided for in the regulation.

(f) Regulation for prevention of air pollution emergency episodes—4- and 8-hour carbon monoxide criteria levels, public announcement, source inspections, preplanned abatement strategies, acquisition of atmospheric stagnation forecasts.

(1) The requirements of this paragraph are applicable in the Sacramento County Air Pollution Control District.

(2) For the purposes of this regulation the following definitions apply:

(i) ''Administrator'' means the Administrator of the Environmental Protection Agency or his authorized representative.

(ii) ''ppm'' means parts per million by volume.

(iii) ''ug/m^3'' means micrograms per cubic meter.

(3) For the purposes of this paragraph, the following episode criteria shall apply:

Pollutant	Averaging time (hours)	Stage 1	Stage 2	Stage 3
Carbon monoxide	4	[1] 25	[1] 45	[1] 60
	8	[1] 15	[1] 30	[1] 40

[1] Parts per million by volume.

(4) The provisions of the Sacramento County Air Pollution Control District's Regulation IX, as submitted on November 4, 1977, relating to carbon monoxide episodes averaged over 1 hour shall apply to carbon monoxide episodes averaged over 4 and 8 hours except that the Administrator shall insure that declaration, notification, source inspections, and termination of such episodes will occur.

(5) Stationary source curtailment plans shall be prepared by business, commercial, industrial, and governmental establishments as follows:

(i) The owner or operator of any business, commercial, industrial, or governmental facility or activity listed below shall submit to the Administrator plans to curtail or cease operations causing stationary source air contaminants in such activity:

(A) Stationary sources which can be expected to emit 100 tons or more per

year of hydrocarbons or carbon monoxide.

(ii) The plans required by paragraph (f)(5)(i)(A) of this section shall include the following information:

(A) The information requested by Regulation IX, Rule 125, section d, as submitted to the EPA on November 4, 1977.

(B) The total number of employees at the facility during each shift on a normal weekday.

(C) The amount of energy (gas, fuel oil, and electricity) used on a normal weekday.

(D) For first-stage episodes, the measures to voluntarily curtail equipment emitting air pollutants.

(E) For second-stage episodes:

(*1*) The measures to curtail, as much as possible, equipment operations that emit air pollutants specific to the type of episode and, in the case of oxidant episodes, the equipment operations that emit hydrocarbons.

(*2*) The measures to postpone operations which can be postponed until after the episode.

(F) For third-stage episodes:

(*1*) A list of equipment, with permit numbers if applicable, which can be shut down without jeopardizing the public health or safety, and an estimate of the resultant reductions in air contaminant emissions.

(*2*) A list of all equipment, with permit numbers if applicable, which must be operated to protect the public health or safety, and an estimate of the air contaminant emissions from such equipment.

(iii) Copies of the stationary source curtailment plans approved in accordance with the provisions of this paragraph shall be on file and readily available on the premises to any person authorized to enforce the provisions of this paragraph.

(6) The owner or operator of any governmental, business, commercial, or industrial activity or facility listed in paragraph (f)(5) of this section shall submit a stationary source curtailment plan to the Administrator within 60 days after promulgation of final rulemaking.

(7) The plans submitted pursuant to the requirements of this paragraph shall be reviewed by the Administrator for approval or disapproval according to the following schedule:

(i) For sources with emissions of hydrocarbons and carbon monoxide greater than or equal to 454 metric tons (500 tons) per year, within 45 days after receipt.

(ii) For sources with emissions of hydrocarbons and carbon monoxide greater than or equal to 91 metric tons (100 tons) per year and less than 454 metric tons (500 tons) per year, within 90 days after receipt.

(iii) For sources with emissions of hydrocarbons and carbon monoxide less than 91 metric tons (100 tons) per year, within 180 days after receipt.

(8) The owner or operator of any industrial, business, governmental, or commercial establishment required to submit a plan by this paragraph shall be notified by the Administrator within 30 days after the plan has been evaluated. Any plan disapproved by the Administrator shall be modified to overcome the disapproval and resubmitted to the Administrator within 30 days of receipt of the notice of disapproval.

(9) A source inspection plan shall be implemented by the Administrator upon the declaration of any episode stage, and the following facilities shall be inspected to ensure compliance:

(i) Those sources covered under Rule 122, as submitted to the EPA on November 4, 1977, as appropriate.

(10) The Administrator shall insure that forecasts of atmospheric stagnation conditions during any episode stage and updating of such forecasts are acquired.

(11) Any source that violates any requirement of this regulation shall be subject to enforcement action under section 113 of the Clean Air Act.

(12) All submittals or notifications required to be submitted to the Administrator by this regulation shall be sent to: Regional Administrator, Attn: Air and Hazardous Materials Division, Air Technical Branch, Technical Analysis Section (A–4–3) Environmental Protection Agency, 215 Fremont Street, San Francisco, CA 94105.

(g) Regulation for the prevention of air pollution emergency episodes—Priority II particulate matter emergency episode contingency plan.

(1) The requirements of this paragraph are applicable in the Sacramento County Air Pollution Control District.

(2) For the purposes of this paragraph the following episode criteria shall apply:

Pollutant	Averaging time (hours)	Stage 1	Stage 2	Stage 3
Particulate matter	24	[1] 375	[1] 625	[1] 875

[1] Micrograms per cubic meter.

(3) Whenever it is determined that any episode level specified in paragraph (g)(2) of this section is predicted to be attained, is being attained, or has been attained and is expected to remain at such levels for 12 or more hours, the appropriate episode level shall be declared.

(4) Whenever the available scientific and meteorological data indicate that any episode level specified in paragraph (g)(2) of this section is no longer being attained and is not predicted to increase again to episode levels, such episode shall be declared terminated.

(5) The following shall be notified whenever an episode is predicted, attained, or terminated:

(i) Public officials.

(ii) Public health, safety, and emergency agencies.

(iii) News media.

(h) The requirements of Subpart H of this chapter are met in the MBUAPCD which the following exceptions: There is no time schedule to assure that stationary source and traffic curtailment plans are submitted and reviewed in a timely manner; curtailment plans are not sufficiently specific; there are no provisions for the acquisition of forecasts of atmospheric stagnation conditions; and adequate mandatory emission control actions are not specified for Third-Stage oxidant episodes.

(i) Regulation for prevention of oxidant air pollution emergency episodes within the MBUAPCD.

(1) The requirements of this paragraph are applicable in the MBUAPCD.

(2) For the purposes of this regulation the following definitions apply:

(i) ''Administrator'' means the Administrator of the Environmental Protection Agency or his authorized representative.

(ii) ''Major national holiday'' means a holiday such as Christmas, New Year's Day or Independence Day.

(iii) ''Regulation VII'' in this paragraph means Regulation VII, ''Emergencies'', of the MBUAPCD, adopted May 25, 1977, and submitted to the Environmental Protection Agency as a revision to the California State Implementation Plan by the California Air Resources Board on November 4, 1977.

(3) The plans required by Rule 705(a) of Regulation VII shall include the following information in addition to that required in Rule 705(b) of Regulation VII, and shall be submitted and processed as follows:

(i) Stationary sources.

(A) The total number of employees at the facility during each shift:

(*1*) On a normal weekday.

(*2*) On a major national holiday.

(B) The amount and type of fuel used:

(*1*) On a normal weekday.

(*2*) On a major national holiday.

(C) For Third-Stage episodes:

(*1*) A list of equipment and the permit numbers of such equipment not operated on a major national holiday.

(*2*) A statement as to whether or not the facility operates on a major national holiday.

(ii) Indirect sources.

(A) The total number of employees at the facility during each shift:

(*1*) On a normal weekday.

(*2*) On a major national holiday.

(B) The number of motor vehicles and vehicle miles traveled for motor vehicles operated:

(*1*) By the company, on company business, on a normal weekday and on a major national holiday.

(*2*) By employees commuting between home and the place of business on a normal weekday and on a major national holiday.

(C) The number of parking spaces:

(*1*) Available.

(*2*) Normally used on a weekday.

(*3*) Normally used on a major national holiday.

(D) The minimum number of motor vehicles to be operated that are necessary to protect the public health or safety.

(E) For Third-Stage episodes, a statement as to whether or not the facility operates on a major national holiday.

(iii) Each owner or operator required to submit a plan as specified under Rule 705(a) of Regulation VII shall submit such plans within 60 days after promulgation of the final rulemaking.

(iv) The plans submitted in accordance with the provisions of this paragraph shall be approved or disapproved by the Administrator within 120 days after receipt.

(v) Each owner or operator required to submit a plan as specified under Rule 705(a) of Regulation VII shall be notified within 90 days after the Administrator's decision.

(vi) Any plan disapproved by the Administrator shall be modified to overcome this disapproval and resubmitted to the Administrator within 30 days of the notice of disapproval.

(vii) A copy of the plan approved in accordance with the provisions of this paragraph shall be on file and readily available on the premises to any person authorized to enforce the provisions of this section.

(4) The following actions shall be implemented by the Administrator upon declaration of a Third-Stage oxidant episode: the general public, schools, industrial, business, commercial, and governmental activities throughout the MBUAPCD shall operate as though the day were a major national holiday.

(5) The Administrator shall ensure the acquisition of forecasts of atmospheric stagnation conditions during any episode stage and updating of such forecasts.

(j)–(o) [Reserved]

(p) Regulation for prevention of air pollution emergency episodes—requirements for stationary source curtailment plans and particulate matter episodes.

(1) The requirements of this paragraph are applicable in the Los Angeles County, Riverside County, San Bernardino County Desert and Imperial County Air Pollution Control Districts.

(2) For the purposes of this regulation, the following definitions apply:

(i) ''Administrator'' means the Administrator of the Environmental Protection Agency or his authorized representative.

(ii) ''ug/m^3'' means micrograms per cubic meter.

(iii) ''Major national holiday'' means a holiday such as Christmas or New Year's Day.

(3) Stationary source curtailment plans shall be prepared by major stationary sources, as defined by section 169(1) of the Act:

(i) The plans required by this paragraph shall include the following information:

(A) The information requested in the California Air Resources Board's Criteria for Approval of Air Pollution Emergency Abatement Plans (Executive Order G–63).

(B) The total number of employees at the facility during each work shift on a normal weekday and on a major national holiday.

(C) The amount of energy (gas, fuel oil, and electricity) used on a normal weekday and on a major national holiday.

(D) For first-stage episodes:

(*1*) The measures to voluntarily curtail equipment emitting air pollutants.

(E) For second-stage episodes:

(*1*) The measures to curtail, as much as possible, equipment operations that emit air pollutants specific to the type of episode and, in the case of oxidant episodes, the equipment operations that emit hydrocarbons and nitrogen oxides.

(*2*) The measures to postpone operations which can be postponed until after the episode.

(F) For third-stage episodes:

(*1*) A list of equipment, with permit numbers if applicable, which can be shut down without jeopardizing the public health or safety, and an estimate of the resultant reductions in hydrocarbons, nitrogen oxides, and particulate matter emissions.

(*2*) A list of all equipment, with permit numbers if applicable, which must be operated to protect the public health or safety, and an estimate of the hydrocarbons, nitrogen oxides and particulate matter emissions from such equipment.

(4) A copy of the stationary source curtailment plan approved in accordance with the provisions of this paragraph shall be on file and readily available on the premises to any person authorized to enforce the provisions of this paragraph.

(5) The owner or operator of any governmental, business, commercial, or industrial activity or facility listed in paragraph (p)(3) of this section shall submit a stationary source curtailment plan to the Administrator within 60 days after promulgation of final rulemaking.

(6) The plans submitted pursuant to the requirements of this paragraph shall be reviewed by the Administrator within 90 days.

(7) The owner or operator of any major stationary source required to submit a plan by this paragraph shall be notified by the Administrator within 30 days after the plan has been evaluated as to whether the plan has been approved or disapproved. Any plan disapproved by the Administrator shall be modified to overcome the disapproval and resubmitted to the Administrator within 30 days of receipt of the notice of disapproval.

(8) All submittals or notifications required to be submitted to the Administrator by this regulation shall be sent to:

Regional Administrator, Attn: Air and Hazardous Materials Division, Air Technical Branch, Technical Analysis Section (A–4–3), Environmental Protection Agency, 215 Fremont Street, San Francisco CA 94105.

(9) Any source that violates any requirement of this regulation shall be subject to enforcement action under section 113 of the Act.

(10) For the purposes of this regulation the following episode criteria shall apply to particulate matter episodes:

Pollutant	Averaging time (hours)	µg/m³		
		Stage 1	Stage 2	Stage 3
Particulate matter	24	375	625	875

(q) The requirements of Subpart H of this chapter are met in the Fresno County Air Pollution Control District, with the following exceptions: There are no episode criteria levels, declaration procedures, notification procedures, source inspection procedures, emission control actions, or episode termination procedures for carbon monoxide episodes based on 4- and 8-hour averaging times, or for particulate matter emergency episodes based on 24-hour averaging times; there is no time schedule to initiate the call for the submittal of individual abatement plans; the requirements for the content of the abatement plans are not sufficiently specific to ensure the adequate plans are submitted; there are no provisions for requiring abatement plans from operations which attract large numbers of motor vehicles with their related emissions; the Stage 3 photochemical oxidants (ozone) criterion level equals the Federal significant harm level; there are no provisions for adequate mandatory emission control actions.

(r) Regulation for prevention of air pollution emergency episodes—4- and 8-hour carbon monoxide criteria levels, mandatory emission control actions, preplanned abatement strategies, and a Priority I particulate matter emergency episode contingency plan.

(1) The requirements of this paragraph are applicable in the Fresno County Air Pollution Control District.

(2) For the purposes of this regulation the following definitions apply:

(i) ''Administrator'' means the Administrator of the Environmental Protection Agency or his authorized representative.

(ii) ''ppm'' means parts per million by volume.

(iii) ''µg/m³'' means micrograms per cubic meter.

(iv) ''Major national holiday'' means a holiday such as Christmas or New Year's Day.

(3) For the purposes of this regulation, the following episode criteria shall apply to carbon monoxide episodes:

Pollutant	Averaging time (hours)	Stage 1 (ppm)	Stage 2 (ppm)	Stage 3 (ppm)
Carbon monoxide	4	25	45	60
	8	15	30	40

(4) The provisions of the Fresno County Air Pollution Control District's Regulation VI, as submitted on October 23, 1974, relating to carbon monoxide episodes averaged over 1 hour

shall apply to carbon monoxide episodes averaged over 4 and 8 hours except that the Administrator shall insure that declaration procedures, notification procedures, source inspections, and termination of such episodes occur.

(5) Stationary source curtailment plans and traffic abatement plans shall be prepared by business, commercial, industrial, and governmental establishments in Fresno County as follows:

(i) The owner or operator of any business, commercial, industrial, or governmental stationary source which can be expected to emit 100 tons or more per year of carbon monoxide, hydrocarbons, or particulate matter shall submit to the Administrator plans to curtail or cease operations causing stationary source air contaminants in such activity:

(ii) The plans required by paragraph (r)(5)(i) of this section shall include the following information:

(A) The information requested in the California Air Resources Board's ''Criteria for Approval of Air Pollution Emergency Abatement Plans'' (Executive Order G–63).

(B) The total number of employees at the facility during each shift on a normal weekday and on a major national holiday.

(C) The amount of energy (gas, fuel oil, and electricity) used on a normal weekday and on a major national holiday.

(D) For first-stage episodes, the measures to voluntarily curtail equipment emitting air pollutants.

(E) For second-stage episodes:

(*1*) The measures to curtail, as much as possible, equipment operations that emit air pollutants specific to the type of episode and, in the case of oxidant episodes, the equipment operations that emit hydrocarbons or nitrogen oxides.

(*2*) The measures to postpone operations which can be postponed until after the episode.

(F) For third-stage episodes:

(*1*) A list of equipment, with permit numbers if applicable, which can be shut down without jeopardizing the public health or safety, and an estimate of the resultant reductions in carbon monoxide, hydrocarbons, nitrogen oxides, and particulate matter emissions.

(*2*) A list of all equipment, with permit numbers if applicable, which must be operated to protect the public health or safety, and an estimate of the carbon monoxide, hydrocarbons, nitrogen oxides, and particulate matter emissions from such equipment.

(iii) The owner or operator of any industrial, business, commercial, or governmental facility or activity employing more than 100 persons per shift at any one business address shall submit to the Administrator plans to curtail or cease operations causing air contaminants from vehicle use.

(iv) The plans required by paragraph (r)(5)(iii) of this section shall include the following information:

(A) The information requested in the California Air Resources Board's ''Criteria for Approval of Air Pollution Emergency Abatement Plans'' (Executive Order G–63).

(B) The total number of employees at the facility during each shift.

(C) The total number of motor vehicles and vehicle miles traveled for motor vehicles operated:

(*1*) By the company on company business on a normal weekday and a major national holdiay.

(*2*) By employees commuting between home and the place of business on a normal weekday and a major national holiday.

(*3*) The minimum number of motor vehicles to be operated that are necessary to protect public health or safety.

(6) A copy of the stationary source curtailment and/or traffic abatement plans approved in accordance with the provisions of this paragraph shall be on file and readily available on the premises to any person authorized to enforce the provisions of this paragraph.

(7) The owner or operator of any governmental, business, commercial, or industrial activity or facility listed in paragraph (r)(5) of this section shall submit a stationary source curtailment plan and/or traffic abatement plan to the Administrator within 60 days after promulgation of final rulemaking.

(8) The plans submitted pursuant to the requirements of this paragraph shall be reviewed by the Administrator

for approval or disapproval according to the following schedule:

(i) For sources with emissions of hydrocarbons, carbon monoxide, or particulate matter greater than or equal to 454 metric tons (500 tons) per year, or for establishments employing 400 or more employees per shift, within 45 days after receipt.

(ii) For sources with emissions of hydrocarbons, carbon monoxide, or particulate matter greater than or equal to 91 metric tons (100 tons) per year and less than 454 metric tons (500 tons) per year, or for establishments employing more than 200 and less than 400 employees per shift, within 90 days after receipt.

(iii) For establishments employing 100 to 200 employees per shift, within 180 days after receipt.

(9) The owner or operator of any industrial, business, governmental or commercial establishment required to submit a plan by this paragraph shall be notified by the Administrator within 30 days after the plan has been evaluated as to whether the plan has been approved or disapproved. Any plan disapproved by the Administrator shall be modified to overcome the disapproval and resubmitted to the Administrator within 30 days of receipt of the notice of disapproval.

(10) Any source that violates any requirement of this regulation shall be subject to enforcement action under section 113 of the Act.

(11) All submittals or notifications required to be submitted to the Administrator by this regulation shall be sent to:

Regional Administrator, ATTN: Air and Hazardous Materials Division, Air Technical Branch, Technical Analysis Section (A–4–3), Environmental Protection Agency, 215 Fremont Street, San Franscisco, CA 94105.

(12) For the purposes of this regulation the following episode criteria shall apply to particulate matter episodes and Stage 3 photochemical oxidants episodes:

Pollutant	Averaging time (hours)	µg/m³		
		Stage 1	Stage 2	Stage 3
Particulate matter	24	375	625	875
Photochemical oxidants ...	1	.....	.....	[1] 0.5

[1] Parts per million.

(13) The Fresno County Air Pollution Control District's Regulation VI, as submitted on October 23, 1974, relating to episodes for carbon monoxide and photochemical oxidants averaged over 1 hour, shall apply to particular matter episodes averaged over 24 hours, except that the Administrator shall insure that declaration procedures, notification procedures, source inspections, and termination of such episodes occur.

(14) The Administrator shall insure that the following actions will be taken in the source and receptor areas on the declaration of a Stage 1, Stage 2 or Stage 3 episode:

(i) For a Stage 1 or Stage 2 episode:

(A) Persons operating any facility or activity named in paragraph (r)(5) of this section shall implement the appropriate plans submitted in accordance with subparagraph (5) of the declared Stage 1 or Stage 2 episode for the appropriate air contaminant(s).

(ii) For a Stage 3 episode:

(A) The general public, schools, industrial, business, commercial, and governmental activities throughout Fresno County shall operate as though the day were a major national holiday.

[43 FR 22721, May 26, 1978]

EDITORIAL NOTE: For FEDERAL REGISTER citations affecting § 52.274, see the List of CFR Sections Affected in the Finding Aids section of this volume.

§ 52.275 Particulate matter control.

(a) The following rules or portions of rules are retained because they control emissions of particulate matter, and because there is no demonstration that their deletion would not interfere with the attainment and maintenance of the national standards for particulate matter:

(1) Lake County APCD.

(i) Part III–50 and Part V–1B, submitted on October 23, 1974, and previously approved under 40 CFR 52.223.

(2) San Luis Obispo County APCD.

(i) Rule 113, submitted on February 21, 1972, and previously approved under 40 CFR 52.223.

(b) The following regulations are disapproved because they relax the control on particulate matter emissions without any accompanying analyses demonstrating that these relaxations will not interfere with the attainment

and maintenance of the National Ambient Air Quality Standards.

(1) Amador County APCD.

(i) Rules 211 and 212, submitted on April 21, 1976. (Regulation V, Rules 13 and 14, submitted on June 30, 1972, and previously approved, are retained.)

(ii) Rules 207 and 212, submitted on October 13, 1977. (The analogous Rules 10 and 14 of Regulation V, submitted on June 30, 1972, and previously approved, are retained and shall remain in effect for Federal enforcement purposes.)

(2) Calaveras County APCD.

(i) Rule 211, submitted on October 13, 1977. (Rule 211, submitted on July 22, 1975, and previously approved, is retained and shall remain in effect for Federal enforcement purposes.)

(3) Del Norte County APCD.

(i) Rules 410(c)(7) and 420(e), submitted on November 10, 1976.

(ii) Rules 420(e) and (f), submitted on November 4, 1977.

(4) El Dorado County APCD.

(i) Rule 212, submitted on April 10, 1975, and Rule 211, submitted on August 2, 1976. (The analogous Rule 55, submitted on February 21, 1972, and previously approved, is retained and shall remain in effect for Federal enforcement purposes.)

(5) Humbolt County APCD.

(i) Rules 410(c)(7) and 420(e), submitted on November 10, 1976.

(ii) Rules 420(e) and (f), submitted on November 4, 1977.

(6) Mariposa County APCD.

(i) Rule 211, submitted on June 6, 1977. (Rule 211, submitted on January 10, 1975, and previously approved, is retained and shall remain in effect for Federal enforcement purposes.)

(7) Mendocino County APCD.

(i) Rule 410(c)(7), submitted on November 10, 1976.

(ii) Rules 420(e) and (f), submitted on November 4, 1977.

(8) Nevada County APCD.

(i) Rule 212, submitted on April 10, 1975, and Rule 211, submitted on April 21, 1976. (Rule 52.1, submitted on June 30, 1972, and previously approved, is retained and shall remain in effect for Federal enforcement purposes.)

(9) Northern Sonoma County APCD.

(i) Rule 420(e), submitted on November 10, 1976.

(ii) Rules 420(e) and (f), submitted on October 13, 1977.

(10) Placer County APCD.

(i) Rule 211, submitted on October 13, 1977. (The analogous Rule 61, submitted on June 30, 1972, and previously approved, is retained and shall remain in effect for Federal enforcement purposes.)

(ii) Rules 202, 207, and 211, submitted on October 15, 1979; and Section 61, and Rules 202 and 207, previously approved in the June 30, 1972, January 10, 1975, and October 13, 1977 submittals, are retained.

(11) Plumas County APCD.

(i) Rule 211, submitted on June 6, 1977. (The analogous Rule 211, submitted on January 10, 1975, and previously approved, is retained and shall remain in effect for Federal enforcement purposes.)

(12) San Luis Obispo County APCD.

(i) Rule 403, submitted on November 10, 1976.

(13) Sierra County APCD.

(i) Rule 211, submitted on June 6, 1977. (The analogous Rule 211, submitted on January 10, 1975, and previously approved, is retained and shall remain in effect for Federal enforcement purposes.)

(14) Trinity County APCD.

(i) Rules 410(c)(7) and 420(e), submitted on November 10, 1976.

(ii) Rules 420(e) and (f), submitted on November 4, 1977.

[43 FR 25675, June 14, 1978]

EDITORIAL NOTE: For FEDERAL REGISTER citations affecting §52.275, see the List of CFR Sections Affected in the Finding Aids section of this volume.

§52.276 Sulfur content of fuels.

(a) The following rules or portions of rules are disapproved since they represent a relaxation of previously submitted regulations and an adequate control strategy demonstration has not been submitted showing that the relaxation will not interfere with the attainment and maintenance of the National Ambient Air Quality Standards:

(1) North Central Coast Intrastate Region:

(i) Monterey Bay Unified APCD.

(A) Rule 412(a)(8), *Sulfur Content of Fuels*, submitted on October 23, 1974.

(b) The deletion of the following rules from the State implementation plan is disapproved since their deletion represents a relaxation of the control strategy, and an adequate demonstration showing that the relaxation will not interfere with the attainment and maintenance of the national ambient air quality standards has not been submitted:

(1) Southeast Desert Intrastate Region:

(i) Imperial County APCD.

(A) Rule 126, Sulfur Contents of Fuels, submitted on June 30, 1972 and previously approved under 40 CFR 52.223.

[42 FR 56606, Oct. 27, 1977, as amended at 43 FR 35695, Aug. 11, 1978]

§ 52.277 Oxides of nitrogen, combustion gas concentration limitations.

(a) The following rules are being retained to the extent that the new rules are less stringent than the previously approved rules:

(1) North Central Coast Intrastate Region:

(i) Monterey Bay Unified APCD.

(A) Rule 404(c) submitted on February 21, 1972 by the Monterey-Santa Cruz Unified APCD and previously approved as part of the SIP, is being retained for sources combusting gaseous fuels. Rule 404(c) will be in effect for Monterey and Santa Cruz Counties only. Rule 404(c), submitted on November 10, 1976 by the Monterey Bay Unified APCD, will only be in effect for sources combusting liquid or solid fuels with heat input rates greater than 1½ billion BTU per hour in the Monterey and Santa Cruz portions of the Unified APCD.

(B) Rule 408(b), submitted on February 21, 1972 by the San Benito County APCD and previously approved as part of the SIP, is being retained for sources combusting liquid, solid, or gaseous fuels with heat input rates less than 1½ billion BTU per hour. Rule 408(b) will be in effect for San Benito County only. Rule 404(c), submitted on November 10, 1976 by the Monterey Bay unified APCD, will only be in effect for sources combusting liquid, solid, or gaseous fuels with heat input rates greater than 1½ billion BTU per hour in the San Benito County portion of the Unified APCD.

[42 FR 56606, Oct. 27, 1977]

§ 52.278 Oxides of nitrogen control.

(a) The following regulations are disapproved because they relax the control of nitrogen oxides emissions without an accompanying analysis demonstrating that this relaxation will not interfere with the attainment and maintenance of the National Ambient Air Quality Standards.

(1) South central coast intrastate AQCR.

(i) San Luis Obispo County APCD.

(A) Rule 405(A)(1), *Nitrogen Oxides Emission Standards Limitations and Prohibitions* submitted on November 10, 1976, is disapproved; and Rule 114(4), *Gaseous Contaminants Oxides of Nitrogen* submitted on February 21, 1972 and previously approved in 40 CFR 52.223, is retained.

[43 FR 34467, Aug. 4, 1978]

§ 52.279 Food processing facilities.

(a) The following regulations are disapproved because they conflict with the requirements of 40 CFR Subpart I [formerly §51.18], ''Review of new sources and modifications,'' and relax the control on emissions from food processing facilities without any accompanying analyses demonstrating that these relaxations will not interfere with the attainment and maintenance of the National Ambient Air Quality Standards.

(1) Merced County APCD Rules 210.1–II–J, 210.1–VII–F, 408–C (new sentences two and three), adopted on August 21, 1984, and submitted on October 5, 1984.

(2) Bay Area Air Quality Management District sections 2–2–119, 2–2–120. Adopted on September 19, 1984, and submitted on October 5, 1984.

[52 FR 3646, Feb. 5, 1987, as amended at 55 FR 31835, Aug. 6, 1990]

§ 52.280 Fuel burning equipment.

(a) The following rules and regulations are disapproved because they relax the control on emissions from fuel burning equipment without any accompanying analyses demonstrating

that these relaxations will not interfere with the attainment and maintenance of the National Ambient Air Quality Standards.

(1) Mountain Counties Intrastate AQCR:

(i) Amador County APCD.

(A) Rules 209, submitted on April 21, 1976 and October 15, 1979, are disapproved; and Regulation V, Rule 19, previously approved in the June 30, 1972 submittal, is retained.

(B) Rule 210(B)(1), submitted on October 15, 1979, is disapproved; and Rules 11 and 210, previously approved in the June 30, 1972 and April 21, 1976 submittals, are retained.

(ii) Calaveras County APCD.

(A) Rule 209, Fossil Fuel-Steam Generator Facility, submitted on October 13, 1977, is disapproved; and Rule 408, Fuel Burning Equipment, previously approved in the June 30, 1972, submittal, is retained and shall remain in effect for Federal enforcement purposes.

(iii) Tuolumne County APCD.

(A) Rule 210, submitted on October 15, 1979, is disapproved; and Rule 407, previously approved in the June 30, 1972 submittal, is retained.

(iv) Placer County APCD.

(A) Rule 210, submitted on October 15, 1979, is disapproved, and Rule 210, previously approved in the October 13, 1977 submittal, is retained.

(2) Sacramento Valley Intrastate AQCR:

(i) Yolo-Solano APCD.

(A) Rule 2.16, *Fuel Burning Heat or Power Generators,* submitted on July 19, 1974 is disapproved; and Rule 2.16, *Fuel Burning Equipment,* submitted on June 30, 1972 and previously approved as part of the SIP in 40 CFR 52.223, is retained.

(3) Southeast Desert Intrastate AQCR.

(i) San Bernardino County Desert APCD.

(A) Rule 474, *Fuel Burning Equipment—Oxides of Nitrogen,* submitted November 4, 1977, is disapproved. Rule 68 (same title) submitted June 30, 1972 and approved in 40 CFR 52.223 is retained.

(b) The deletion of the following rules or portions of rules from the State implementation plan is disapproved since their deletion represents a relaxation of the control strategy and an adequate demonstration showing that the relaxation will not interfere with the attainment and maintenance of the national ambient air quality standards has not been submitted:

(1) Southeast Desert Intrastate Region:

(i) Imperial County APCD.

(A) Rule 131, Fuel Burning Equipment, submitted on February 21, 1972 and previously approved under 40 CFR 52.223.

(ii) San Bernardino County.

(A) Rule 67, Fuel Burning Equipment as applied to new sources. The emission limit of Rule 67 is retained and is applicable only to existing sources already granted a permit.

(c) The emission limits of Rules 67 and 72 are partially retained, applicable only to (existing) sources granted permits prior to June 17, 1981.

(1) South Coast Air Quality Management District.

(i) Rules 67, *Fuel Burning Equipment,* and 72, *Fuel Burning Equipment,* submitted on November 19, 1979.

[43 FR 25677, 25684 June 14, 1978, as amended at 43 FR 35696, Aug. 11, 1978; 43 FR 51774, Nov. 7, 1978; 43 FR 59490, Dec. 21, 1978; 44 FR 5664, Jan. 29, 1979; 46 FR 3889, Jan. 16, 1981; 46 FR 27116, 27118, May 18, 1981; 47 FR 25016, June 9, 1982]

§52.281 Visibility protection.

(a) The requirements of section 169A of the Clean Air Act are not met, because the plan does not include approvable procedures for protection of visibility in mandatory Class I Federal areas.

(b) Regulations for visibility monitoring. The provisions of §52.26 are hereby incorporated and made part of the applicable plan for the State of California.

(c) Regulations for visibility new source review. The provisions of §52.27 are hereby incorporated and made part of the applicable plan for the State of California only with respect to:

(1) Mendocino County air pollution control district,

(2) Monterey County air pollution control district,

(3) North Coast Unified air quality management district,

(4) Northern Sonoma County air pollution control district, and

(5) Sacramento County air pollution control district.

(d) The provisions of § 52.28 are hereby incorporated and made part of the applicable plan for the State of California, except for:

(1) Monterey County air pollution control district, and

(2) Sacramento County air pollution control district.

(e) *Long-term strategy*. The provisions of § 52.29 are hereby incorporated and made part of the applicable plan for the State of California.

[50 FR 28553, July 12, 1985, as amended at 52 FR 45138, Nov. 24, 1987]

Subpart G—Colorado

§ 52.320 Identification of plan.

(a) Title of plan: ''Air Quality Implementation Plan for State of Colorado''.

(b) The plan was officially submitted on January 26, 1972.

(c) The plan revisions listed below were submitted on the dates specified.

(1) Request for legal authority submitted February 14, 1972, by the Governor.

(2) Request for 110(e) extensions submitted March 20, 1972, by the Governor.

(3) Statements by State Air Pollution Control Commission (APCC) related to public inspection of emission data, emergency episodes, and transportation control submitted May 1, 1972, by the APCC. (Non-regulatory)

(4) List of sources under compliance schedules submitted May 1, 1972, by the State Department of Health.

(5) Transportation Control Plans submitted June 4, 1973, by the Governor.

(6) Statements relating to transportation control plans submitted July 16, 1973, by the Governor. (Non-regulatory)

(7) Plan revisions submitted November 21, 1973, by the Governor which delete Section III of Regulation No. 1 only as it relates to existing sources in Appendix P concerning SO_2.

(8) On April 24, October 4, 1979, and January 7, 1980, the Governor submitted revisions to meet Part D and other sections of the Clean Air Act, as amended in 1977. No action is taken with regard to the revised stack height regulation.

(9) Supplemental information about the Air Quality Maintenance Areas was submitted by the Governor on January 29, 1975.

(10) Procedural rules for all proceedings before the Air Pollution Control Commission, submitted May 5, 1977, by the Governor.

(11) On January 2, 1979, the Governor submitted the nonattainment area plan for all areas designated nonattainment as of March 3, 1978. EPA is taking no action on areas for which the Governor has requested redesignations (Larimer-Weld TSP and ozone; El Paso County ozone).

(12) Extension request for attainment of CO and O_3 was submitted by the Governor on January 5, 1979.

(13) On July 5, 1979, the governor submitted the Air Pollution Control Commission's final comment on our May 11, 1979, proposal. This included a clarification that the ''No-Drive Day'' was not part of the State Implementation Plan and transportation control measures schedules for Larimer-Weld.

(14) On July 18, 1979, the Commission committed to revising Regulation 7.

(15) On July 23, 1979, the Governor submitted House Bills 1109, 1090, and Senate Bill 1 as part of the plan.

(16) On July 27, 1979, the Governor submitted the Denver Regional Council of Governments schedules for implementing the transportation control strategies, and clarified that the Transportation Development Plan was part of the plan.

(17) On March 4, 1980, the Governor submitted a plan revision to meet the requirements of Air Quality Monitoring 40 CFR part 58, subpart C, § 58.20.

(18) On May 29, 1980, the Governor submitted written evidence of the State's legal authority to implement and enforce an automobile emissions control program as well as schedules for implementing that program and a demonstration that it will achieve a 25% reduction in exhaust emissions by 1987.

(19) On January 22 and February 6, 1980 the Governor submitted schedules for the implementation of transportation control measures for Denver and Larimer-Weld elements of the State Implementation Plan, respectively.

(20) On April 21, 1980, the Governor submitted a plan revision to meet the

data reporting requirements of section 127 of the Clean Air Act.

(21) On June 22, 1980, the Governor submitted the following amended rules:

REPEAL AND REPROMULGATION OF REGULATION NO. 3 ''A Regulation Requiring Air Pollutant Emission Notice, Emission Permits and Fees.''

REVISIONS TO COMMON PROVISIONS REGULATION as they relate to changes in Regulation No. 3.

(22) On June 5, 1980, the Governor submitted the following rules:

REPEAL AND REPROMULGATION OF REGULATION NO. 7 ''A Regulations to Control Emissions of Volatile Organic Compounds'' and revisions to the Common Provisions Regulations as they relate to changes in Regulation No. 7.

(23) On August 25, 1980, the Governor of Colorado submitted a site specific revision to the State Implementation Plan for Coors Container Corporation, Paper Packaging Division, in regard to alternative volatile organic compound emissions reduction for its printing presses.

(24) Provisions to meet the requirements of sections 110 and 172 of the Clean Air Act, as amended in 1977, regarding control of Group II VOC sources were submitted on January 6, 1981, and the supplemental information received on August 20, 1981.

(25) On December 29, 1980, the Governor submitted the following rule: Regulation No. 11, covering procedures for garage licensing (including mechanic testing and licensing), equipment requirements (including standards and specifications for exhaust gas analyzers), requirements for inspections, and emission standards as part of the Colorado motor vehicle inspection program.

(26) On March 23, 1981, the Governor submitted revised regulations limiting sulfur dioxide emissions from certain oil shale production facilities.

(27) On April 12, 1982, the Governor submitted the plan revisions to show attainment of the lead National Ambient Air Quality Standard.

(28) Regulation Number 7 is part of the plan.

(29) Provisions to meet the requirements of Part D of the Clean Air Act for carbon monoxide in Colorado Springs, Fort Collins, and Greeley and ozone in Denver were submitted on June 24, 1982, and supplemented by information submitted on May 4, 1983,by the Colorado Air Quality Control Commission.

(30) Revisions to Air Pollution Control Commission Regulation No. 1 related to fugitive particulate emissions, were submitted by the Governor on June 22, 1982; on December 6, 1982; and on March 23, 1983, with a technical clarification dated August 5, 1982. Included is approval of requirements for continuous emission monitoring (CEM) of sulfur dioxide on fossil fuel fired steam generator with greater than 250 million BTU per hour heat input. Also addressed is the reinstatement of the 40% opacity limitation for wigwam waste-wood burners into Regulation No. 1. With this is the addition of operation and maintenance (O&M) requirements to promote improved operation of the wigwam burners.

(i) Incorporation by reference

(A) Emission Control Regulations for Particulates, Smokes and Sulfur Oxides for the State of Colorado, Regulation No. 1.II (Smoke and Opacity); III (Particulates); IV (Continuous Emission Monitoring Requirements for Existing Sources; VII (Statements of Basis and Purpose); and Appendices A and B; which were effective on May 30, 1982.

(B) Colorado Air Quality Control Commission Common Provisions Regulation which was effective on May 30, 1982.

(C) Letter of August 5, 1982, from the State of Colorado to EPA. Clarification of the SIP Re: Continuous Emission Requirements for Oxides of Sulfur from Fossil Fueled Steam Generators.

(31) Revisions to Air Pollution Control Commission Regulation No. 11 related to the Colorado Inspection and Maintenance (I/M) program for exhaust emission inspection of motor vehicles, submitted by the Governor on December 10, 1984.

(32) Revisions to Air Pollution Control Commission Regulation No. 1, section II.A.6 and III.C.2 (a) and (b), submitted by the Governor on April 9, 1985.

(i) Incorporation by reference.

(A) Revisions to Air Pollution Control Commission Regulation No. 1,

''Emission Control Regulation for Particulates, Smokes, and Sulfur Oxides for the State of Colorado,'' sections II.A.6 and III.C.2 (a) and (b), effective March 2, 1985.

(33) A revision to Regulation No. 4, ''Regulation on the Sale of New Woodstoves'', to control emissions from new woodstoves was submitted by the Governor on October 24, 1986.

(i) Incorporation by reference

(A) Colorado Air Quality Control Commission Regulation No. 4, ''Regulation on the Sale of New Woodstoves'' (Section III.A., E., F., G. and Section VI.B. and C.) adopted June 27, 1985.

(34) [Reserved]

(35) Colorado Air Pollution Control Commission Regulation No. 4, ''Regulation on the Sale of New Wood Stoves'', submitted by the Governor on July 18, 1985.

(i) Incorporation by reference.

(A) Colorado Air Quality Control Commission Regulation No. 4., ''Regulation on the Sale of New Wood Stoves'', adopted June 27, 1985.

(36) ''Revisions to Colorado Regulation No. 3 Requiring Air Contaminant Emission Notices, Emission Permits and Fees as it Relates to the Prevention of Significant Deterioration'' and ''Revisions to Common Provision Regulation as Related to Regulation 3.'' Changes submitted April 18, 1983, by the Governor.

(37) Supplemental information submitted on December 16, 1985, by the Colorado Department of Health concerning compliance with EPA's stack height regulations in issuing PSD permits.

(i) Incorporation by reference.

(A) Revisions to Regulation 3 and Common Provisions Regulation adopted March 10, 1983, by the Colorado Air Quality Control Commission.

(B) Supplemental information submitted on December 16, 1985, by the Colorado Department of Health concerning compliance with EPA's stack height regulation in issuing PSD permits.

(38) Revisions to Regulation 1 to control emissions from alfalfa dehydrators were submitted by the Governor on July 29, 1987.

(i) Incorporation by reference.

(A) Section II.A.6 and introductory text of Section III.C.2.a of Regulation 1 adopted by the Colorado Air Quality Control Commission on January 15, 1987, effective on March 2, 1987.

(39) Regulation 12, to control emissions from diesel fleets with nine or more vehicles over 7,500 pounds empty weight, registered in the AIR Program area (the Colorado I/M program), was submitted by the Governor on December 21, 1987.

(i) Incorporation by reference

(A) Colorado Air Quality Control Commission, Regulation No. 12, adopted December 18, 1986, and effective January 30, 1987.

(40) A revision to the Colorado SIP was submitted by the Governor on May 8, 1986, for Visibility New Source Review.

(i) Incorporation by Reference.

(A) Revision to the Colorado State Implementation Plan regarding Revision to Regulation No. 3, Section XIV was submitted by the Governor on April 18, 1983, and was adopted on March 10, 1983.

(B) Revision to the Colorado State Implementation Plan regarding Revision to Regulation No. 3, Section IV was submitted by the Governor on May 8, 1986, and was adopted on March 20, 1986.

(41) A revision to the SIP was submitted by the Governor on December 21, 1987, for visibility general plan requirements, monitoring, and long-term strategies.

(i) Incorporation by reference:

(A) Letter dated December 21, 1987, from Governor Roy Romer submitting the Colorado Visibility SIP revision.

(B) The visibility SIP revision, Regulation No. 3, ''Regulation requiring an air contaminant emission notice, Emission Permit Fees'', section XV, adopted by the Colorado Air Quality Control Commission on November 19, 1987.

(42) Revisions to Air Pollution Control Regulation No. 1, requiring reasonably available control technology RACT for carbon monoxide control on petroleum refinery catalytic cracking units were submitted by the Governor on May 8, 1986.

(i) Incorporation by reference.

(A) Revisions to Section IV., paragraphs IV.A., IV.D.2. and IV.E., and Section VII., Regulation No. 1, emission control regulations for particulates, smokes, carbon monoxide, and sulfur oxides for the State of Colorado requiring CEM and RACT on petroleum refinery catalytic cracking units in the metro Denver area effective on April 30, 1986.

(43) On June 15, 1988, the Governor submitted revisions to the CO SIP for Colorado Springs. The revisions contain a new measure, the Clean Air Campaign. EPA considers all other aspects of the submittal to be surplus.

(i) Incorporation by reference

(A) Clean Air Campaign portion of the Carbon Monoxide State Implementation Plan for the Colorado Springs urbanized area, revised August 12, 1987.

(44) A revision to Regulation No. 4 of the Colorado SIP which exempts certain woodburning devices from the certification requirements of Regulation No. 4 was submitted by the Governor of Colorado on September 10, 1988.

(i) Incorporation by reference. (A) In a letter dated September 10, 1988, Roy Romer, Governor of Colorado, submitted a revision to Regulation No. 4 of the Colorado SIP.

(B) Paragraph (I)(A)(10)–(13) and (II)(C), revisions to Regulation No. 4, ''Regulation on the Sale of New Woodstoves,'' of the Colorado SIP became effective on June 30, 1988.

(45) In a letter dated May 8, 1986, the Governor submitted revisions to the Colorado Regulation No. 3 (Regulation Requiring an Air Contaminant Emission Notice, Emission Permit Fees) of the Colorado SIP modifying stack evaluations. The changes consisted of (1) new definitions of dispersion techniques, good engineering practice, nearby, and excessive concentrations (Section XII.D.) and (2) rules clarifying technical modeling and monitoring requirements (Section XII.C.).

(i) Incorporation by reference. (A) Revisions to the Colorado Regulation No. 3 (Regulation Requiring and Air Contaminant Emission Notice, Emission Permit Fees), Section XII, adopted March 20, 1986, by the Colorado Air Quality Control Commission.

(46) On July 29, 1987, the Governor submitted:

(1) Amendments to Colorado Regulation No. 11 (Inspection/Maintenance (I/M) program) and

(2) Regulation No. 13 (oxygenated fuels program).

(i) Incorporation by reference:

(A) Regulation No. 11, revised January 15, 1987, effective March 2, 1987.

(B) Regulation No. 13, adopted June 29, 1987, effective July 30, 1987.

(47) In a letter dated October 23, 1985, the Director of the Air Pollution Control Division submitted the stack height demonstration analysis. Supplemental information was submitted on June 20, 1986, December 4, 1986, February 3, 1987, March 3, 1988, March 15, 1988, July 6, 1988 and August 16, 1988.

(i) Incorporation by reference. Stack height demonstration analyses submitted by the State on October 23, 1985, June 20, 1986, December 4, 1986, February 3, 1987, March 3, 1988, March 15, 1988, July 6, 1988 and August 16, 1988.

(48) [Reserved]

(49) A revision to Regulation No. 4 of the Colorado SIP submitted on June 29, 1990, prohibits persons from operating a wood-burning stove or fireplace during a high pollution day in specified areas.

(i) Incorporation by reference.

(A) Revisions to Regulation No. 4, ''Regulation on the Sale of New Woodstoves,'' effective on June 30, 1990.

(50) [Reserved]

(51) On June 29, 1990, the Governor of Colorado submitted revisions to the plan. The revisions include amendments to the Common Provisions Regulation and Regulation No. 3 for emission permit fees and prevention of significant deterioration of air quality (PSD) regulations to incorporate the nitrogen dioxide (NO_2) increments.

(i) *Incorporation by reference.* (A) Revisions to the Colorado Air Quality Control Regulations, Common Provisions Regulation and Regulation No. 3, which were effective on June 30, 1990.

(ii) *Additional material.* (A) October 22, 1990 letter from Douglas Skie, EPA, to Bradley Beckham, Director, Air Pollution Control Division.

(B) November 5, 1990 letter from Bradley Beckham, Director, Air Pollution Control Division, to Douglas Skie, EPA.

(52) [Reserved]

(53) Revisions to the Colorado State Implementation Plan were submitted by the Governor of Colorado on July 13, 1990. The revision adds a voluntary educational Better Air Campaign to the Ft. Collins Carbon Monoxide element of the Colorado SIP.

(i) Incorporation by reference.

(A) The Fort Collins Better Air Campaign as defined in Exhibit ''A'' and adopted on September 5, 1989, through Resolution 89–161.

(54) On November 17, 1988 the Governor submitted revisions to Regulation No. 3 and the Common Provisions Regulation which included:

Provisions for the review of new sources to protect the PM–10 national ambient air quality standards (NAAQS) and for consistency with EPA requirements;

Amendments to address deficiencies and previous EPA disapprovals as identified in the May 26, 1988 SIP Call;

Provisions for the certification and trading of emission offset credits; and

Amendments to increase permit processing and annual fees.

(i) Incorporation by reference

(A) Regulation No. 3: Sections I.B.2.c.(i)–(vi), I.B.3.a., II.B.1.d & e, II.B.3.c., II.C.1.h., II.C.3., III.A.1., IV.C.4.e., IV.C.4.f.(i) & (iv)–(v), IV.C.6–10, IV.D.1.e., IV.D.2.a.(iv), IV.D.2.b., IV.D.2.c.(i) & (ii), IV.D.3.a.(vi), IV.D.3.b.(i)(D), IV.D.3.b.(iii)(A)(3), (5), (7), & (11), IV.D.3.d.(ii), IV.D.3.e., IV.G.3., IV.H.7., V.C–I, VI.A.2., VI.C.1., VI.D., VII.A., VIII.D., IX.K., XIII.B., XIV.B.1, XIV.B.4.c.; and the Common Provisions Regulation: Section I.G., definitions of ''Best Available Control Technology,'' ''Complete,'' ''Construction,'' ''Enforceable,'' ''Fixed Capital Cost,'' ''Lowest Achievable Emission Rate (LAER),'' ''Modification,'' Net Emissions Increase,'' ''Particulate Matter,'' ''Particulate Matter Emissions,'' ''PM10,'' ''PM10 Emissions,'' ''Reconstruction,'' ''Significant,'' ''Total Suspended Particulate;'' revised August 18, 1988, effective September 30, 1988.

(ii) Additional Material

(A) Letter dated April 29, 1991 from the Colorado Air Pollution Control Division to EPA.

(55) [Reserved]

(56) Revisions to the Colorado State Implementation Plan were submitted by the Governor in letters dated October 25, 1989, and October 30, 1991. The revisions consist of amendments to Regulation No. 12, ''Reduction of Diesel Vehicle Emissions.''

(i) Incorporation by reference.

(A) Regulation No. 12 revisions adopted on July 20, 1989, and effective on August 30, 1989, as follows: Part A (Diesel Fleet Self-Certification Program): I.B.2.; I.C.1.; I.D.; II.A.2.b., c.; all of IV. except those sections noted below; and add new Parts B (Diesel Opacity Inspection Program) and C (Standards for Visible Pollutants from Diesel Engine Powered Vehicles—Operating on Roads, Streets and Highways), except those sections noted below. Regulation No. 12 revisions adopted on September 19, 1991, and effective on October 30, 1991, as follows: Part A: I.A.; I.B.3–18.; I.C.2.; II.A.1.; II.A.2.d., f., g., III.A.; IV.A.2.; IV.C.1.c., g.; IV.C.2.c., h.; IV.C.3.f., i.; IV.C.4.k.; IV.C.5.a.iv.; IV.C.5.b.; V.; VI.; VII.; VIII.; Part B: I.B.2., 7., 19., 30.–37., 40., 50., 51.; I.C.2.; I.D.; I.E.3.; II.C.1.b.iv.; II.E.2.c., e.; II.E.8.; III.A.; III.B.4.; III.C.4.b.viii.–ix.; III.D.3.b.vi., xi.; III.D.3.c.viii., xiii.; V.; VI.; and Part C: A.–F.

(57) Revision to the State Implementation Plan for Carbon Monoxide: Greeley Element.

(i) Incorporation by reference.

(A) Letter and submittal dated November 25, 1987, from the Governor of Colorado to the EPA Region VIII Administrator, to revise the SIP to include the Greeley Element. The revision was adopted by the State on September 17, 1987.

(58) On November 17, 1988, the Governor submitted an amendment to Colorado Regulation No. 1, Section II.A.9., to exempt the destruction of Pershing missiles under the Intermediate-Range Nuclear Forces (INF) Treaty from meeting the opacity limits.

(i) *Incorporation by reference.*

(A) Regulation No. 1, Section II.A.9., adopted September 15, 1988, effective October 30, 1988.

(59) Revisions to the State's new source review and prevention of significant deterioration permitting rules in the Common Provisions Regulation

and Regulation No. 3, which were submitted by the Governor on April 9, 1992.

(i) Incorporation by reference.

(A) Regulation No. 3: Sections I.A., I.B.2.c. through e., I.B.3.e. and f., II.B.1., II.B.2., II.C., III.A.1., III.B., III.D., IV.B.2., IV.C.4., IV.C.7., IV.C.9, IV.D.1., IV.D.2.a.(ii) and (iv), IV.D.2.b.(i), IV.D.3.a.(iii) and (vi), IV.D.3.b.(iv), IV.H., IV.I., V.A., V.C.1., V.C.3., V.D.1., V.D.2., V.D.4., V.D.5., V.D.11., V.E.1., V.E.5., V.F.10., V.F.11., V.F.13., V.G.7., V.G.8., V.H.3., V.H.7. and 8., V.I.3., VI.A.1., VI.C.2., IX.D., XII.D., XIII.B.4., XIII.B.6., and XV.D.2.; and the Common Provisions Regulation: Sections I.D.2., I.F., II.C.1., II.C.4., IV., and Section I.G.- definitions of ''best available control technology,'' ''commenced construction,'' ''complete,'' ''federally enforceable,'' ''modification,'' ''potential to emit,'' ''reasonable further progress,'' and ''stationary source;'' revised October 17, 1991, effective November 30, 1991.

(60) Revisions to the Long-Term Strategy of the Colorado State Implementation Plan for Class I Visibility Protection were submitted by the Governor in a letter dated November 18, 1992. The submittal completely replaces the previous version of the Long-Term Strategy and includes amendments to Air Quality Control Commission Regulation No. 3, ''Air Contaminant Emissions Notices.''

(i) Incorporation by reference.

(A) Revisions to the Visibility Chapter of Regulation No. 3 as follows: XV.F.1.c. as adopted on August 20, 1992, and effective on September 30, 1992.

(61) The Governor of Colorado submitted a portion of the requirements for the moderate nonattainment area PM_{10} State Implementation Plan (SIP) for Denver, Colorado with a letter dated June 7, 1993, and subsequent submittals dated September 3, 1993, and October 20, 1993, fulfilling most of the commitments made in the June 7, 1993, letter. The submittals were made to satisfy those moderate PM_{10} nonattainment area SIP requirements due for the Denver PM_{10} nonattainment area on November 15, 1991. EPA is approving, for the limited purpose of strengthening the SIP, the control measures contained in the SIP revisions identified above. (EPA is not approving, at this time, the control measures limiting the emissions from Purina Mills and Electron Corporation.)

(i) Incorporation by reference.

(A) Revisions to Regulation No. 4, ''Regulation on the Sale of New Woodstoves and the Use of Certain Woodburning Appliances During High Pollution Days,'' as adopted by the Air Quality Control Commission on June 24, 1993, effective August 30, 1993, as follows: insert new Section VIII and recodification of References Section. This revision pertains to local jurisdiction implementation and enforcement of ordinances and resolutions restricting wood burning on high pollution days.

(B) Regulation No. 16, ''Concerning Material Specifications for, Use of, and Clean-up of Street Sanding Material,'' as adopted by the Air Quality Control Commission on June 24, 1993, effective August 30, 1993, as follows: recodification of Regulation and addition of Sections II and III, which regulate emissions from street sanding and sweeping in the Denver PM_{10} nonattainment area.

(C) Revisions to Regulation No. 1, ''Emission Control Regulations for Particulates, Smokes, Carbon Monoxide, and Sulfur Oxides for the State of Colorado,'' as adopted by the Air Quality Control Commission on August 19, 1993, effective October 30, 1993, as follows: insert new Sections VII and VIII and recodification of the two following Sections, ''Emission Regulations Concerning Areas Which are Nonattainment for Carbon Monoxide—Refinery Fluid Bed Catalytic Cracking Units'', and ''Statements of Basis and Purpose'' Sections. The revisions pertain to restrictions on the use of oil as a back-up fuel for certain sources and set new emission limits at the following Public Service Company Power Plants: Cherokee, Arapahoe, and Valmont.

(D) Coors Glass Plant allowable emission limitations on three furnaces.

1. Permit 92JE129–1, effective date January 19, 1993, regulating emissions at the KTG glass melting furnace #1.

2. Permit 92JE129–2, effective date January 19, 1993, regulating emissions at the KTG glass melting furnace #2.

3. Permit 92JE129–3, effective date January 19, 1993, regulating emissions at the KTG glass melting furnace #3.

(E) Conoco Refinery allowable emission limitations from the refinery.

1. Permit 90AD524, effective date March 20, 1991, regulating a Tulsa natural gas fired 20MMbtu/hour heater equipped with low-Nox burners.

2. Permit 90AD053, effective date March 20, 1991, regulating process heaters H–10, H–11 and H–27 and process boilers B4, B6, and B8 all burning fuel gas only.

3. Permit 91AD180–3, effective December 28, 1992, regulating the three stage Claus sulfur recovery unit with tail gas recovery unit.

(ii) Additional material.

(A) Regional Air Quality Council, ''Guidelines for Reducing Air Pollution from Street Sanding'' sets voluntary guidelines for public works departments to follow to reduce the amount of street sand applied, and includes recommendations for increasing the effectiveness of street cleaning operations.

(B) Adolph Coors Company Brewery permit emission limitations on five boilers. Permits: C–12386–1&2, C–12386–3, C–10660, C–11199, and C–11305.

(62) On February 24, 1993, and December 9, 1993, the Governor of Colorado submitted revisions to the Colorado State implementation plan (SIP) to satisfy those moderate PM–10 nonattainment area SIP requirements for Pagosa Springs, Colorado due to be submitted by November 15, 1991. Included in the December 9, 1993 submittal were PM–10 contingency measures for Pagosa Springs to satisfy the requirements of section 172(c)(9) of the Act due to be submitted by November 15, 1993.

(i) Incorporation by reference.

(A) Colorado Air Quality Control Commission Nonattainment Areas regulation, section I. ''Pagosa Springs Nonattainment Area,'' adopted on November 19, 1992, effective on December 30, 1992, with revisions adopted on November 12, 1993, effective on December 30, 1993.

(63) [Reserved]

(64) On December 9, 1993, the Governor of Colorado submitted PM_{10} contingency measures for the moderate nonattainment PM_{10} areas of Canon City and Lamar, Colorado. The submittal was made to satisfy the moderate PM_{10} nonattainment area requirements for contingency measures due for Canon City and Lamar on November 15, 1993.

(i) Incorporation by reference.

(A) Colorado Air Quality Control Commission Nonattainment Area Regulation, Section IV. ''Lamar Nonattainment Area,'' and Section V. ''Canon City Nonattainment Area—PM–10,'' adopted on November 12, 1993, and effective December 30, 1993.

(65) On January 15, 1992, March 17, 1993, and December 9, 1993, the Governor of Colorado submitted revisions to the Colorado State implementation plan (SIP) to satisfy those moderate PM–10 nonattainment area SIP requirements for Aspen, Colorado due to be submitted by November 15, 1991. Included in the December 9, 1993 submittal were PM–10 contingency measures for Aspen to satisfy the requirements of section 172(c)(9) of the Act due to be submitted by November 15, 1993.

(i) Incorporation by reference.

(A) Colorado Air Quality Control Commission Nonattainment Areas regulation, all of Section III. ''Aspen/Pitkin County PM–10 Nonattainment Area'' except Section III.C.6., adopted on January 21, 1993 effective on March 2, 1993, with revisions adopted on November 12, 1993, effective on December 30, 1993.

(66) On January 14, 1993, the Governor of Colorado submitted revisions to the new source review and prevention of significant deterioration requirements in the Common Provisions Regulation and Regulation No. 3, as well as a revision to Regulation No. 7 pertaining to volatile organic compounds of negligible photochemical reactivity.

(i) Incorporation by reference.

(A) Air Quality Control Commission Common Provisions Regulation, Section I.C. and Section I.G., definitions of ''adverse environmental effect,'' ''air pollutant,'' ''best available control technology,'' ''federal act,'' ''federally enforceable,'' ''hazardous air pollutant,'' paragraph h. in ''net emissions increase,'' ''ozone depleting compound,'' and ''significant;'' revised 11/19/92, effective 12/30/92.

(B) Air Quality Control Commission Regulation No. 3 Air Contaminant Emission Notices, Sections I.B.1., I.B.2.c-e., I.B.3.e-f., IV.B.3–5, IV.D.2.a.(iii), IV.D.2.c., IV.D.3., IV.D.4., IV.E., IV.F., IV.H., V.E.9., VI.B.1., VI.B.4., VI.B.5., VI.C., VII.C., VIII.A., VIII.C.1., XI.A., and XIII.A. and B.; revised 11/19/92, effective 12/30/92.

(C) Air Quality Control Commission Regulation No. 7 Emissions of Volatile Organic Compounds, Section II.B.; revised 11/19/92, effective 12/30/92.

(67) On November 27, 1992, the Governor of Colorado, submitted a revision to the Colorado SIP. This revision replaces previous versions of Regulation No. 13 with the amended Regulation No. 13 (oxygenated gasoline program) adopted September 17, 1992. Regulation No. 13 requires the oxygenated gasoline programs to be implemented in the Fort Collins-Loveland, Colorado Springs, and Boulder-Denver Metropolitan Statistical Areas (MSA) as required by Section 211(m) of the Clean Air Act Amendments of 1990.

(i) Incorporation by reference.

(A) Revision to Regulation No. 13, ''Oxygenated Gasoline Program,'' as adopted by the Colorado Air Quality Control Commission on September 17, 1992, effective October 10, 1992, as follows: entire Regulation revision. This regulation supersedes and replaces all previous revisions to Regulation No. 13, (40 CFR, 52.320(46)(2)).

(68) The Governor of Colorado submitted a portion of the requirements for the moderate nonattainment area PM_{10} State Implementation Plan (SIP) for Telluride, Colorado with a letter dated March 17, 1993. The submittal was made to satisfy those moderate PM_{10} nonattainment area SIP requirements due for Telluride on November 15, 1991; however, the submittal did not contain quantitative milestones to provide for maintenance of the PM_{10} National Ambient Air Quality Standards through December 1997. The Governor of Colorado submitted moderate PM_{10} nonattainment area contingency measures for Telluride with a letter dated December 9, 1993. This submittal was intended to satisfy the requirements of section 172(c)(9) of the Clean Air Act due on November 15, 1993.

(i) Incorporation by reference.

(A) Colorado Air Quality Control Commission Nonattainment Areas regulation, Section II., Telluride Nonattainment Area, adopted January 21, 1993 and effective on March 2, 1993, with revisions adopted November 12, 1993 and effective December 30, 1993.

(ii) Additional material.

(A) The commitment and schedule for the adoption and implementation of PM_{10} control measures that are necessary to demonstrate maintenance of the 24-hour PM_{10} standard in Telluride, which were submitted in an April 21, 1994 letter from Thomas Getz, Air Pollution Control Division, to Douglas M. Skie, EPA.

(69) On January 14, 1994 and on June 24, 1994, Roy Romer, the Governor of Colorado, submitted SIP revisions to the Implementation Plan for the Control of Air Pollution. This revision establishes and requires the implementation of an enhanced motor vehicle inspection and maintenance program in the Denver and Boulder urbanized areas as required by section 187(a)(6) of the Clean Air Act Amendments of 1990. This material is being incorporated by reference for the enforcement of Colorado's enhanced I/M program only.

(i) Incorporation by reference.

(A) Colo. Rev. Stat. Sections 42–4–306.5—42–4–316 adopted June 8, 1993 as House Bill 93–1340, effective July 1, 1993.

(B) Regulation No. 11 (Inspection/Maintenance Program) as adopted by the Colorado Air Quality Control Commission (AQCC) on March 17, 1994.

(ii) Additional materials.

(A) SIP narrative and technical appendices 1–20 as corrected and approved by the AQCC on June 21, 1994. The narrative is entitled ''State of Colorado Motor Vehicle Inspection and Maintenance State Implementation Plan'', dated December 16, 1993 with technical corrections.

(70) Revisions to the Colorado State Implementation Plan were submitted by the Governor on September 27, 1989, and August 30, 1990. The revisions consist of amendments to the Ozone provisions in Regulation No. 7, ''Regulation To Control Emissions of Volatile Organic Compounds.''

(i) Incorporation by reference.

(A) Revisions to Regulation No. 7, Sections 7.I (Applicability), 7.II (General Provisions), 7.III (General Requirements for Storage and Transfer of Volatile Organic Compounds), 7.IV (Storage of Highly Volatile Organic Compounds), 7.V (Disposal of Volatile Organic Compounds), 7.VI (Storage and Transfer of Petroleum Liquid), 7.VIII (Petroleum Processing and Refining), 7.IX (Surface Coating Operations), 7.X (Use of Solvents for Degreasing and Cleaning), 7.XI (Use of Cutback Asphalt), 7.XII (Control of VOC Emissions from Dry Cleaning Facilities Using Perchloroethylene as a Solvent), 7.XIII (Graphic Arts), 7.XIV (Pharmaceutical Synthesis), 7.XV (Control of Volatile Organic Compound Leaks from Vapor Collection Systems Located at Gasoline Terminals, Bulk Plants, and Gasoline Dispensing Facilities), and Appendices A (Criteria for Control of Vapors from Gasoline Transfer to Storage Tanks), B (Criteria for Control of Vapors from Gasoline Transfer at Bulk Plants-Vapor Balance System), and D (Test Procedures for Annual Pressure/Vacuum Testing of Gasoline Transport Trucks). The following new emission sources and appendices were added to Regulation No. 7: 7.IX.A.7 (Fugitive Emission Control), 7.IX.N. (Flat Wood Paneling Coating), 7.IX.O. (Manufacture of Pneumatic Rubber Tires), and Appendix E (Emission Limit Conversion Procedure). These revisions became effective on October 30, 1989, and August 30, 1990.

(ii) Additional material.

(A) February 5, 1992, letter from John Leary, Acting Director, Colorado Air Pollution Control Division, to Douglas Skie, EPA. This letter contained the State's commitment to conduct capture efficiency testing using the most recent EPA capture efficiency protocols, and the commitment to adopt federal capture efficiency test methods after they are officially promulgated by EPA.

(71)–(72) [Reserved]

(73) On January 14, 1994 and on June 24, 1994, Roy Romer, the Governor of Colorado, submitted SIP revisions to the State Implementation Plan for the Control of Air Pollution. This revisions requires the implementation of a basic motor vehicle inspection and maintenance program in the urbanized areas of El Paso (Colorado Springs), Larimer (Fort Collins), and Weld (Greeley) Counties meeting the requirements of the Clean Air Act Amendments of 1990. This material is being incorporated by reference for the enforcement of Colorado's basic I/M program only.

(i) Incorporation by reference.

(A) Colo. Rev. Stat. §§ 42–4–306.5—42–4–316 adopted June 8, 1993 as House Bill 93–1340, effective July 1, 1993.

(B) Regulation No. 11 (Inspection/Maintenance Program) as adopted by the Colorado Air Quality Control Commission (AQCC) on March 17, 1994, effective April 30, 1994.

[37 FR 10855, May 31, 1972]

EDITORIAL NOTE: For FEDERAL REGISTER citations affecting § 52.320, see the List of CFR Sections Affected in the Finding Aids section of this volume.

§ 52.321 Classification of regions.

The Colorado plan was evaluated on the basis of the following classifications:

Air quality control region	Pollutant				
	Particulate matter	Sulfur oxides	Nitrogen dioxide	Carbon monoxide	Ozone
Pawnee Intrastate	I	III	III	III	III
Metropolitan Denver Intrastate	I	III	III	I	I
Comanche Intrastate	III	III	III	III	III
San Isabel Intrastate	I	III	III	III	III
San Luis Intrastate	III	III	III	III	III
Four Corners Interstate	IA	IA	III	III	III
Grand Mesa Intrastate	III	III	III	III	III
Yampa Intrastate	III	III	III	III	III

[37 FR 10855, May 31, 1972, as amended at 39 FR 16346, May 8, 1974; 44 FR 57409, Oct. 5, 1979]

§52.322 Extensions.

The Administrator, by authority delegated under section 188(d) of the Clean Air Act, as amended in 1990, extends for one year (until December 31, 1995) the attainment date for the Denver, Colorado, PM–10 nonattainment area.

[60 FR 52315, Oct. 6, 1995]

§52.323 Approval status.

With the exceptions set forth in this subpart, the Administrator approves Colorado's plan for the attainment and maintenance of the national standards under section 110 of the Clean Air Act. Furthermore, the Administrator finds that the plan satisifies all requirements of Part D, Title 1, of the Clean Air Act as amended in 1977, except as noted below.

[44 FR 57410, Oct. 5, 1979]

§52.324 Legal authority.

(a) The requirements of §51.230(f) of this chapter are not met since the State lacks the authority to require owners or operators of stationary sources to install, maintain, and use emission monitoring devices and to make periodic reports to the State on the nature and amounts of emissions from such stationary sources.

(b) Delegation of authority: Pursuant to section 114 of the Act, Colorado requested a delegation of authority to enable it to require sources to install and maintain monitoring equipment and to report periodically on the nature and amount of their emissions. The Administrator has determined that Colorado is qualified to receive a delegation of the authority it requested. Accordingly, the Administrator delegates to Colorado his authority under section 114(a)(1)(B) and (C) of the Act, i.e., authorityto require sources within the State of Colorado to install and maintain monitoring equipment and to report periodically on the nature and amount of their emissions.

(c) The requirements of §51.230(d) of this chapter are not met since Regulation No. 3 provides that an emission permit be issued when automatically specific defined time limits have been exceeded. EPA will consider invalid any permit granted automatically pursuant to Section IV.F. of Regulation No. 3. Persons constructing or modifying sources under the authority of automatically issued permits will be subject to Federal enforcement action.

[37 FR 10855, May 31, 1972, as amended at 46 FR 24182, Apr. 30, 1981; 51 FR 40676, Nov. 7, 1986]

§52.325 [Reserved]

§52.326 Area-wide nitrogen oxides (NO_X) exemptions.

The Denver Regional Council of Governments (DRCOG) submitted a NO_X exemption petition to the EPA on May 25, 1994 and submitted supporting documentation via a letter dated August 1, 1994. This petition requested that the Denver metropolitan area, a transitional ozone nonattainment area, be exempted from the requirement to meet the NO_X provisions of the Federal transportation and general conformity rule with respect to ozone. The exemption request was based on monitoring data which demonstrated that the National Ambient Air Quality Standard for ozone had been attained in this area for the 3 years prior to the petition. The EPA approved this exemption request on July 28, 1995.

[60 FR 40291, Aug. 8, 1995]

§§52.327—52.328 [Reserved]

§52.329 Rules and regulations.

(a) On January 14, 1993, the Governor of Colorado submitted revisions to the State's nonattainment area new source review permitting regulations to bring the State's regulations up to date with the 1990 Amendments to the Clean Air Act. With these revisions, the State's regulations satisfy the part D new source review permitting requirements for the following nonattainment areas: the Canon City, Lamar, Pagosa Springs, Aspen, and Telluride moderate PM–10 nonattainment areas, the Denver/Metro Boulder, Longmont, Colorado Springs, and Fort Collins moderate carbon monoxide nonattainment areas, the Greeley not classified carbon monoxide nonattainment area, and the Denver transitional ozone nonattainment area.

[59 FR 64336, Dec. 14, 1994]

§ 52.330 Control strategy: Total suspended particulates.

(a) *Part D—Conditional Approval:* The Pueblo plan is approved assuming the State demonstrates by December 31, 1981, through air quality modeling, attainment of the 24-hour and annual standards, while considering emissions from all sources in the nonattainment area. In addition, the State must repromulgate Regulation No. 1 to satisfy reasonably available control technology requirements in accordance with the following schedule:

(1) The Commission will consider and adopt for public hearing any changes or additions to Regulation No. 1 by February 15, 1981.

(2) The proposed regulations will be published in the Colorado Register by March 10, 1981.

(3) Public hearing will be held by May 14, 1981.

(4) Regulations will be approved with an effective date no later than July 1, 1981, and submitted to EPA by the same date.

[46 FR 26302, May 12, 1981]

§ 52.331 Committal SIP for the Colorado Group II PM_{10} areas.

On April 14, 1989, the Governor submitted a Committal SIP for the Colorado Group II PM_{10} areas. The SIP commits the State to continue to monitor for PM_{10}, report data and to submit a full SIP if a violation of the PM_{10} National Ambient Air Quality Standards is detected.

[54 FR 43178, Oct. 23, 1989]

§ 52.332 Moderate PM–10 nonattainment area plans.

(a) On April 9, 1992, the Governor of Colorado submitted the moderate PM–10 nonattainment area plan for the Canon City area. The submittal was made to satisfy those moderate PM–10 nonattainment area SIP requirements which were due for Canon City on November 15, 1991.

(b) On February 24, 1992, and December 9, 1993, the Governor of Colorado submitted the moderate PM–10 nonattainment area plan for the Pagosa Springs area. The submittal was made to satisfy those moderate PM–10 nonattainment area SIP requirements which were due for Pagosa Springs on November 15, 1991.

(c) On May 27, 1993, the Governor of Colorado submitted the moderate PM–10 nonattainment area plan for the Lamar area. The submittal was made to satisfy those moderate PM–10 nonattainment area SIP requirements which were due for Lamar on November 15, 1991.

(d) On December 9, 1993, the Governor of Colorado submitted PM_{10} contingency measures for the moderate PM_{10} nonattainment areas of Canon City, Lamar, and Pagosa Springs. The submittal was made to satisfy the moderate PM_{10} nonattainment area requirements for contingency measures due for Canon City, Lamar, and Pagosa Springs on November 15, 1993.

(e) On January 15, 1992, March 17, 1993, and December 9, 1993, the Governor of Colorado submitted the moderate PM–10 nonattainment area plan for the Aspen area. The submittals were made to satisfy those moderate PM–10 nonattainment area SIP requirements which were due for Aspen on November 15, 1991. The December 9, 1993 submittal was also made to satisfy the PM–10 contingency measure requirements which were due for Aspen on November 15, 1993.

[58 FR 68038, Dec. 23, 1993, as amended at 59 FR 26128, May 19, 1994; 59 FR 29734, June 9, 1994; 59 FR 47095, Sept. 14, 1994; 59 FR 64336, Dec. 14, 1994]

§§ 52.333—52.342 [Reserved]

§ 52.343 Significant deterioration of air quality.

(a) The requirements of sections 160 through 165 of the Clean Air Act are not met for the following categories of sources for preventing the significant deterioration of air quality:

(1) Sources exempt under the following Colorado Common Provision Regulation definition of Stationary Source: ''Except that properties which are or will be used only for right-of-way, transmissions, gathering, transportation, communication, pipeline, or similar purposes shall not be considered contiguous or adjacent.''

(2) Sources locating on Indian lands.

(3) Sources locating on Indian Reservations.

(4) Sources that received permits from EPA or constructed prior to September 2, 1986.

(b) Regulations for preventing significant deterioration of air quality. The provisions of §52.21 (b) through (w) are hereby incorporated and made a part of the applicable state plan for the State of Colorado for the sources identified in paragraph (a) as not meeting the requirements of sections 160–165 of the Clean Air Act.

(c) The State of Colorado has clarified the generalized language contained in the Colorado Air Quality Control Regulations on the use of ''applicable air quality models.'' In a letter to Douglas M. Skie, EPA, dated May 19, 1989, Bradley J. Beckham, Director of the Air Pollution Control Division stated:

* * * All PSD permits reviewed by the Division will use the revised modeling guideline mentioned above [Guideline on Air Quality Models (Revised), EPA 450/2–78–027R including Supplement A (July 1987)] for determining if the air quality models, data bases, and other requirements are generally approved by EPA. Any future revisions (including appendices or supplement) will be incorporated into the Division's protocol for reviewing modeling for PSD permits.

[51 FR 31126, Sept. 2, 1986, and 52 FR 4622, Feb. 13, 1987, as amended at 52 FR 22638, June 15, 1987; 54 FR 27881, July 3, 1989; 57 FR 27000, June 17, 1992; 59 FR 42506, Aug. 18, 1994]

§52.344 Visibility protection.

(a) A revision to the SIP was submitted by the Governor on December 21, 1987, for visibility general plan requirements, monitoring, and long-term strategies.

(b) The Visibility NSR regulations are approved for industrial source categories regulated by the NSR and PSD regulations which have previously been approved by EPA. However, Colorado's NSR and PSD regulations have been disapproved for certain sources as listed in 40 CFR 52.343(a)(1). The provisions of 40 CFR 52.26 and 52.28 are hereby incorporated and made a part of the applicable plan for the State of Colorado for these sources.

[50 FR 28553, July 12, 1985, as amended at 52 FR 45137, Nov. 24, 1987; 53 FR 30431, Aug. 12, 1988; 53 FR 48539, Dec. 1, 1988; 59 FR 51379, Oct. 11, 1994]

§52.345 Stack height regulations.

The State of Colorado has committed to revise its stack height regulations should EPA complete rulemaking to respond to the decision in *NRDC* v. *Thomas*, 838 F. 2d 1224 (DC Cir. 1988). In a letter to Mr. Douglas M. Skie, EPA, dated May 9, 1988, Bradley J. Beckham, Director of the Colorado Air Pollution Control Division stated:

* * * We are submitting this letter to allow EPA to continue to process our current SIP submittal with the understanding that if EPA's response to the NRDC remand modified the July 8, 1985, regulations, EPA will notify the state of the rules that must be changed to comply with the EPA's modified requirements. The State of Colorado agrees to make appropriate changes.

[54 FR 24340, June 7, 1989]

§52.346 Air quality monitoring requirements.

In a letter and submittal dated July 7, 1993, from the Governor of Colorado to the EPA Region VIII Administrator, the State submitted a revised Air Quality Monitoring State Implementation Plan. The plan was adopted by the State on March 18, 1993, and completely replaces the previous version of the Air Quality Monitoring plan as identified at 40 CFR 52.320 (c)(17). The revisions updated the plan to bring it into conformance with the Federal requirements for air quality monitoring as found in 40 CFR part 58. The State commits to meet these Federal requirements.

[58 FR 49435, Sept. 23, 1993]

§52.347 Small business assistance program plan.

The Governor of Colorado submitted on November 18, 1992,a plan to develop and implement a Small Business Assistance Program to meet the requirements of section 507 of the Clean Air Act by November 15, 1994. The plan commits to provide technical and compliance assistance to small businesses, hire an Ombudsman to serve as an independent advocate for small businesses, and establish a Compliance Advisory Panel to advise the program and report to EPA on the program's effectiveness.

[59 FR 4004, Jan. 28, 1994]

Subpart H—Connecticut

§ 52.370 Identification of plan.

(a) Title of plan: ''State of Connecticut Air Implementation Plan.''

(b) The plan was officially submitted on March 3, 1972.

(c) The plan revisions listed below were submitted on the dates specified.

(1) Miscellaneous non-regulatory addition to the plan and addition of amendment to Chapter 360 of General Statutes which provides authority for delegation of enforcement authority submitted on March 21, 1972, by the Connecticut Department of Environmental Protection.

(2) Miscellaneous non-regulatory additions to the plan submitted on April 6, 1972, by the Connecticut Department of Environmental Protection.

(3) Attainment dates submitted on August 10, 1972, by the Connecticut Department of Environmental Protection.

(4) Regulation 19–508–100 requiring a review of indirect sources submitted on January 9, 1974, by the Connecticut Department of Environmental Protection.

(5) AQMA identification material submitted on April 15, 1974, by the Connecticut Department of Environmental Protection.

(6) Indirect Source Review Regulation 19–508–100 resubmitted on August 26, 1974, by the Connecticut Department of Environmental Protection.

(7) [Reserved]

(8) Revision to Chapter 8, Air Quality Surveillance, submitted on June 30, 1977, by the Governor.

(9) Revision to Indirect Source Review Regulation 19–508–100 submitted on June 13, 1977, by the Connecticut Department of Environmental Protection.

(10) A revision to Regulation 19–508–19(a)(2)(i) submitted by the Commissioner of the Connecticut Department of Environmental Protection on April 16, 1979, granting a variance until April 1, 1981, to Northeast Utilities.

(11) State Implementation Plan revisions to meet the requirements of part D of the Clean Air Act, as amended in 1977, were submitted on June 22, 1979, and received on June 27, 1979; submitted on December 18, 1979 and received on December 28, 1979; submitted on January 28, 1980, and received on February 1, 1980; submitted and received on May 1, 1980; submitted and received on June 5, 1980; submitted on September 2, 1980, and received on September 8, 1980; and submitted and received on November 12, 1980. Included are plans to attain: The primary TSP standard in Greenwich and Waterbury and the carbon monoxide and ozone standards statewide. A program was also submitted for the review of construction and operation of new and modified major stationary sources of pollution in non-attainment areas. Certain miscellaneous provisions are also included.

(12) A revision to Regulation 19–508–19(a)(2)(i), submitted by the Commissioner of the Connecticut Department of Environmental Protection on September 8, 1980, granting a variance until March 27, 1983, to the Federal Paperboard Company, Inc.

(13) A comprehensive air quality monitoring plan, intended to meet requirements of 40 CFR part 58, was submitted by the Connecticut Department of Environmental Protection Commission on June 9, 1980, and November 17, 1980.

(14) Non-regulatory additions to the plan which were submitted on December 19, 1980, and amended on March 11, 1981, by the Connecticut Department of Environmental Protection amending the sulfur control strategy to include an ''Air Pollution Control/Energy Trade Option'' except for submittal attachments #1 and #2, ''Sulfur Dioxide'' and ''Transport of Sulfur Dioxide'' and the section of attachment #3 ''Control of Sulfur Oxides'' entitled ''Sample Analysis of a Btu Bubble Application''.

(15) Non-regulatory addition to the plan of the state *New Source Ambient Impact Analysis Guideline,* for use in State program actions, submitted on December 19, 1980, and amended on March 11, 1981, and July 15, 1981.

(16) Revisions to regulation 19–508–4 (source monitoring requirements) and regulation 19–508–5 (stack emissions testing) submitted on November 7, 1977, by the Commissioner of the Connecticut Department of Environmental Protection.

(17) A revision to Regulation 19–508–19(a)(2)(i), submitted by the Commissioner of the Connecticut Department of Environmental Protection on June

23, 1981, granting a temporary variance to Uniroyal Chemical, Division of Uniroyal, Inc.

(18) Revisions to Regulation 19–508–19 (Control of Sulfur Compound Emissions), Regulation 19–508–24 (Connecticut Primary and Secondary Standards), and accompanying narrative submitted by the Commissioner of the Connecticut Department of Environmental Protection on October 23, 1981, and November 4, 1981.

(19) Revisions submitted by the Commissioner of the Connecticut Department of Environmental Protection on November 16, 1981. These provisions supersede portions of the revisions identified under paragraph (c)(18).

(20) Revisions to meet the requirements of part D and certain other sections of the Clean Air Act, as amended, were submitted on December 15, 1980, May 29, 1981, and May 5, 1982. Included are changes to the State Ozone Control Plan involving adoption of Regulation 19–508–20(k) controlling the use of cutback asphalt, the approval of the RFP demonstration for ozone attainment, a refined inventory of miscellaneous stationary sources of Volatile Organic Compounds, changes to Regulation 19–508–3(1) dealing with review of new and modified stationary sources, and an amendment to the State's Smoke and Opacity monitoring requirements.

(21) [Reserved]

(22) Revisions to the narrative and State Regulation 19–508–18, subparts (d), f(1), f(2), and part of f(3), governing total suspended particulate emissions, submitted by the Commissioner of the Connecticut Department of Environmental Protection on April 8, 1982.

(23) Regulation 19–508–20(cc), Alternative Emission Reductions as it applies to Regulation 19–508–20: (m), can coating; (n), coil coating; (o), fabric and vinyl coating; (p), metal furniture coating; (q), paper coating; (r), wire coating; (s), miscellaneous metal parts; (t), manufacture of synthesized pharmaceutical products and (v), graphic arts—rotogravure and flexography, was submitted on December 15, 1980, and January 11, 1982, by the Commissioner of the Department of Environmental Protection.

(24) Revision for Sikorsky Aircraft Division of United Technologies received from the Commissioner of the Connecticut Department of Environmental Protection on June 2 and July 16, 1982. This provision supersedes a portion of the revisions identified under (c)(18).

(25) Revisions to meet ozone attainment requirements of Part D (Group II CTG regulations), the adoption of a lead standard and the revision of the ozone standard, submitted on December 15, 1980, are approved as follows: Regulations 19–508–20 (s), (t), (v), (w), (aa), (bb), and (dd), Regulation 19–508–8 and Regulation 19–508–24(i)(l).

(26) Revision for Dow Chemical U.S.A. in Gale's Ferry submitted by the Commissioner of the Connecticut Department of Environmental Protection on December 20, 1982, including state order 7002B signed on May 27, 1982. This provision supersedes a portion of the revisions identified under paragraph (c)(18).

(27) Revision for Lydall and Foulds Division of Lydall, Inc., submitted by the Commissioner of the Connecticut Department of Environmental Protection on December 17, 1982, and January 5, 1983, allowing the facility to burn higher sulfur oil under the State Energy Trade Program.

(28) Revision for Simkins Industries, Inc., in New Haven submitted by the Commissioner of the Connecticut Department of Environmental Protection on January 19, 1983, allowing the facility to burn higher sulfur oil under the Sulfur Energy Trade Program.

(29) Attainment plan revisions to meet the requirements of Part D for ozone were submitted by the Department of Environmental Protection on December 10, 1982, and May 19, 1983. These revisions control volatile organic compound (VOC) emissions from solvent metal cleaners through emission limitations contained in Regulation 19–508–20(*1*) and supporting narrative committing the DEP to implement an educational program for automobile repair facilities. Approval of these revisions allowed EPA to rescind the moratorium on construction and modification of major sources of VOCs which had been in effect since October 1982.

(30) Revision for Loomis Institute in Windsor, submitted by the Commissioner of the Connecticut Department of Environmental Protection on March 30 and July 13, 1983, allowing the facility to burn 2.0 percent sulfur oil under the Sulfur Energy Trade Program.

(31) Revisions demonstrating the attainment and maintenance of the lead standard were submitted on October 18, 1983.

(32) Attainment plan revisions to meet the requirements of part D for ozone and carbon monoxide were submitted by the Department of Environmental Protection on December 10, 1982, January 7, 1983, January 21, 1983, May 19, 1983, June 15, 1983, September 19, 1983, and December 15, 1983. The revisions control volatile organic compound (VOC) and carbon monoxide emissions through a mix of stationary and mobile source controls. EPA approval includes the following regulatory provisions:

(i) Regulation 22a–174–20(ee) limiting emissions from major nonCTG source categories, and

(ii) Regulations 22a–174–27 and 14–164c describing the requirements for Connecticut's motor vehicle Inspection and Maintenance Program.

(33) Revision to Regulation 19–508–20(cc), ''Alternative Emission Reductions'' [made part of the SIP under paragraph (c)(23) of this section] to add Regulation 19–508–20(ee) to the list of VOC regulations that may be met by bubbling under Connecticut's generic rule after source-specific RACT determinations have been made part of the SIP. Revisions requiring sources subject to Regulation 19–508–20(ee) to comply with 19–508–20 (aa), (bb), and (dd). These revisions were submitted by the Connecticut Department of Environmental Protection on September 20, 1983.

(34) Revisions to the Ozone Attainment Plan were submitted by the Commissioner of the Connecticut Department of Environmental Protection on April 22, 1985.

(i) Incorporation by reference.

(A) Amendments to Regulation 22a–174–1, Definitions; Regulation 22a–174–20(a), Storage of Volatile Organic Compounds; Regulation 22a–174–20(b), Loading of Gasoline and Other Volatile Organic Compounds; and Regulation 22a–174–20(k), Restrictions on Cutback Asphalt, effective December 17, 1984.

(ii) Additional material.

(A) *Source Test Guidelines and Procedures.*

(B) *Workshop Manual for Gasoline Tank Truck Certification.*

(C) Appendix B of *Control of Volatile Organic Compound Leaks from Gasoline Tank Trucks and Vapor Collection Systems* (EPA–450/2–78–051).

(35) Revisions to the State Implementation Plan were submitted December 15, 1980, and May 16, 1985, by the Commissioner of the Department of Environmental Protection.

(i) Incorporation by reference.

(A) Amendments to Department of Environmental Protection Regulation 19–508–24(a)(4), ''Acceptable Method'' adopted by the State on October 8, 1980.

(ii) Additional material.

(A) A letter dated May 16, 1985, certifying that an ''Acceptable Method'' shall be interpreted to mean that any monitoring method used to collect ambient air pollution data used for attainment status evaluation or designation must be approved by EPA.

(36) Revision to the State Implementation Plan submitted on April 18, 1986, by the Commissioner of the Department of Environmental Protection.

(i) Incorporated by reference:

(A) State Order No. 943 for Connecticut Charcoal Co., effective April 18, 1986, establishing and requiring reasonably available control technology for the control of volatile organic compounds from this facility.

(37) Revisions to the State Implementation Plan submitted by the Connecticut Department of Environmental Protection on April 18, 1986, and February 3, 1987.

(i) Incorporation by reference.

(A) State Order No. 944 for King Industries, Inc. dated April 18, 1986, which establishes and requires reasonably available control technology for the control of volatile organic compounds from this facility.

(B) A letter from the Connecticut Department of Environmental Protection dated February 3, 1987, which states that the effective date of State Order No. 944 is May 28, 1986.

(38) Revisions to the State Implementation Plan were submitted by the Connecticut Department of Environmental Protection (DEP) on April 14, 1987.

(i) Incorporation by reference.

(A) Letter dated April 14, 1987, from the Connecticut Department of Environmental Protection submitting revisions to the State Implementation Plan for EPA approval.

(B) Letter dated April 1, 1987, from the Secretary of State of Connecticut to EPA.

(C) Section 22a–174–20(x) of Connecticut's Regulations for the Abatement of Air Pollution titled, ''Control of Volatile Organic Compound Leaks from Synthetic Organic Chemical & Polymer Manufacturing Equipment,'' effective April 1, 1987.

(D) Section 22a–174–20(y) of Connecticut's Regulations for the Abatement of Air Pollution titled, ''Manufacture of Polystyrene Resins,'' effective April 1, 1987.

(E) Amendments to subsection 22a–174–20(bb) of Connecticut's Regulations for the Abatement of Air Pollution titled, ''Compliance Methods,'' effective April 1, 1987.

(ii) Additional material.

(A) Letter from the Connecticut DEP dated July 3, 1986, committing the Connecticut DEP to use only EPA approved test methods when requiring the testing of sources emitting volatile organic compound emissions.

(B) Letter from the Connecticut DEP dated May 29, 1987, certifying that there are no polypropylene or high-density polyethylene manufacturers in the State of Connecticut.

(39) Revisions to the State Implementation Plan submitted by the Connecticut Department of Environmental Protection on August 24, 1987.

(i) Incorporation by reference.

(A) Letter from the Connecticut Department of Environmental Protection dated August 24, 1987, submitting a revision to the Connecticut State Implementation Plan.

(B) State Order No. 8007 for Belding Corticelli Thread Company dated July 13, 1987.

(40) [Reserved]

(41) Revision to the Connecticut State Implementation Plan submitted by the Commissioner of the Department of Environmental Protection on February 3, 1987.

(i) Incorporation by reference.

(A) A letter from the Connecticut Department of Environmental Protection dated February 3, 1987, which states that the effective date of State Order No. 943, approved previously, for Connecticut Charcoal Co. is May 28, 1986.

(42) Revisions to the State Implementation Plan submitted by the Connecticut Department of Environmental Protection on October 27, 1987.

(i) Incorporation by reference.

(A) Letter from the Connecticut Department of Environmental Protection dated October 27, 1987, submitting a revision to the Connecticut State Implementation Plan.

(B) State Order No. 8013 and attached Compliance Timetable for Raymark Industries, Incorporated in Stratford, Connecticut effective on September 24, 1987.

(ii) Additional material.

(A) Technical Support Document prepared by the Connecticut Department of Environmental Protection providing a complete description of the reasonably available control technology determination imposed on the facility.

(43) Revisions to the State Implementation Plan submitted by the Connecticut Department of Environmental Protection on February 5, 1988.

(i) Incorporation by reference. (A) Letter from the Connecticut Department of Environmental Protection dated February 5, 1988, submitting a revision to the Connecticut State Implementation Plan.

(B) State Order No. 8012 and attached Compliance Timetable, Appendix A (allowable limits on small, uncontrolled vents), and Appendix B (fugitive leak detection program) for American Cyanamid Company in Wallingford, Connecticut. State Order No. 8012 was effective on January 6, 1988.

(ii) Additional material. (A) Technical Support Document prepared by the Connecticut Department of Environmental Protection providing a complete description of the reasonably available control technology determination imposed on the facility.

(44) Revisions to the State Implementation Plan submitted by the Connecticut Department of Environmental Protection on August 31, 1987.

(i) Incorporation by reference.

(A) Letter from the Connecticut Department of Environmental Protection dated August 31, 1987, submitting a revision to the Connecticut State Implementation Plan.

(B) State Order No. 8008 and attached Compliance Timetable and Appendix A (allowable limits by product classification) for Spongex International, Ltd. in Shelton, Connecticut. State Order No. 8008 was effective on August 21, 1987.

(ii) Additional materials.

(A) Technical Support Document prepared by the Connecticut Department of Environmental Protection providing a complete description of the reasonably available control technology determination imposed on the facility.

(45) [Reserved]

(46) Revisions to the State Implementation Plan submitted by the Connecticut Department of Environmental Protection on July 26, 1988.

(i) Incorporation by reference.

(A) Letter from the Connecticut Department of Environmental Protection dated July 26, 1988, submitting a revision to the Connecticut State Implementation Plan.

(B) State Order No. 8023 and attached Compliance Timetable for New Departure Hyatt, Division of General Motors Corporation in Bristol, Connecticut. State Order No. 8023 was effective on July 8, 1988.

(ii) Additional material.

(A) Technical Support Document prepared by the Connecticut Department of Environmental Protection providing a complete description of the reasonably available control technology determination imposed on the facility.

(47) Revisions to the State Implementation Plan submitted by the Connecticut Department of Environmental Protection on November 5, 1987.

(i) Incorporation by reference. (A) Letter from the Connecticut Department of Environmental Protection dated November 5, 1987, submitting a revision to the Connecticut State Implementation Plan.

(B) State Order No. 8001 and attached Compliance Timetable for Frismar, Incorporated in Clinton, Connecticut. State Order No. 8001 was effective on October 20, 1987.

(ii) Additional material. (A) Technical Support Document prepared by the Connecticut Department of Environmental Protection providing a complete description of the alternative reasonably available control technology determination imposed on the facility.

(48) Revisions to the State Implementation Plan submitted by the Connecticut Department of Environmental Protection on December 5, 1988.

(i) Incorporation by reference. (A) Letter from the Connecticut Department of Environmental Protection dated December 5, 1988, submitting a revision to the Connecticut State Implementation Plan.

(B) State Order No. 8011 and attached Compliance Timetable and Appendix A (allowable limits by product classification) for Dow Chemical, U.S.A. in Gales Ferry, Connecticut. State Order No. 8011 was effective on October 27, 1988.

(ii) Additional material. (A) Technical Support Document prepared by the Connecticut Department of Environmental Protection providing a complete description of the reasonable available control technology determination imposed on the facility.

(49) Revisions to the State Implementation Plan submitted by the Connecticut Department of Environmental Protection on January 11, 1989.

(i) Incorporation by reference.

(A) Letter from the Connecticut Department of Environmental Protection dated January 11, 1989, submitting a revision to the Connecticut State Implementation Plan.

(B) State Order No. 8010 and attached Compliance Timetable for Stanadyne, Incorporated in Windsor, Connecticut. State Order No. 8018 was effective on January 3, 1989.

(ii) Additional material.

(A) Technical Support Document prepared by the Connecticut Department of Environmental Protection providing a complete description of the reasonably available control technology determination imposed on the facility.

(50) Revisions to federally approved section 22a-174-20(a) of the Regulations

of Connecticut State Agencies, submitted on January 27, 1989, by the Department of Environmental Protection, limiting the volatility of gasoline from May 1 through September 15, beginning 1989 and continuing every year thereafter, including any waivers to such limitations that Connecticut may grant. In 1989, the control period will begin on June 30.

(51) Revisions to the State Implementation Plan submitted by the Connecticut Department of Environmental Protection (DEP) on April 7, 1989.

(i) Incorporation by reference.

(A) Letter from the Connecticut DEP dated April 7, 1989, submitting a revision to the Connecticut State Implementation Plan.

(B) State Order No. 8014 and attached Compliance Timetable for Pratt & Whitney Division of United Technologies Corporation in East Hartford, Connecticut. State Order No. 8014 was effective on March 22, 1989.

(C) State Order No. 8027 and attached Compliance Timetable for Pratt & Whitney Division of United Technologies Corporation in North Haven, Connecticut. State Order No. 8027 was effective on March 31, 1989.

(ii) Additional material.

(A) Technical Support Document prepared by the Connecticut DEP providing a complete description of the reasonably available control technology determination imposed on Pratt and Whitney's East Hartford facility.

(B) Technical Support Document prepared by the Connecticut DEP providing a complete description of the reasonably available control technology determination imposed on Pratt and Whitney's North Haven facility.

(52) Revisions to the State Implementation Plan submitted by the Connecticut Department of Environmental Protection on February 7 and August 30, 1989.

(i) Incorporation by reference.

(A) Letter from the Connecticut Department of Environmental Protection dated February 7, 1989, submitting a revision to the Connecticut State Implementation Plan.

(B) State Order No. 8021 and attached Compliance Timetable, and Appendix A (allowable limits on small, uncontrolled vents and allowable outlet gas temperatures for surface condensers) for Pfizer, Incorporated in Groton, Connecticut. State Order No. 8021, Compliance Timetable and Appendix A were effective on December 2, 1988.

(C) Letter from the Connecticut Department of Environmental Protection dated August 30, 1989, and reorganized Appendix C (fugitive leak detection program) and Appendix D (operation and maintenance program for pollution abatement equipment) to State Order No. 8021. Appendices C and D were effective on December 2, 1988.

(ii) Additional material.

(A) Technical Support Document prepared by the Connecticut Department of Environmental Protection providing a complete description of the reasonably available control technology determination imposed on the facility.

(53) Revisions to the State Implementation Plan submitted by the Connecticut Department of Environmental Protection on September 8, 1989.

(i) Incorporation by reference. (A) Letter from the Connecticut Department of Environmental Protection dated September 8, 1989, submitting a revision to the Connecticut State Implementation Plan.

(B) State Order No. 8009 and attached Compliance Timetable, Appendix A, Appendix B, and Appendix C for Uniroyal Chemical Company, Inc. in Naugatuck, Connecticut. State Order No. 8009 was effective on September 5, 1989.

(ii) Additional material. (A) Technical Support Document prepared by the Connecticut Department of Environmental Protection providing a complete description of the reasonably available control technology determination imposed on the facility.

(54) Revisions to the State Implementation Plan submitted by the Connecticut Department of Environmental Protection on December 22, 1989.

(i) Incorporation by reference.

(A) Letter from the Connecticut Department of Environmental Protection dated December 22, 1989, submitting a revision to the Connecticut State Implementation Plan.

(b) State Order No. 8029, attached Compliance Timetable, and Tables A

through I for Hamilton Standard Division of United Technologies Corporation in Windsor Locks, Connecticut. State Order No. 8029 was effective on November 29, 1989.

(ii) Additional material.

(A) Technical Support Document prepared by the Connecticut DEP providing a complete description of the reasonably available control technology determination imposed on Hamilton Standard.

(55) Revision to the State Implementation Plan submitted by the Connecticut Department of Environmental Protection on January 10, 1990.

(i) Incorporation by reference.

(A) Letter from the Connecticut Department of Environmental Protection dated January 10, 1990, submitting a revision to the Connecticut State Implementation Plan.

(B) State Order No. 8032 and attached Compliance Timetable for the Heminway & Bartlett Manufacturing Company in Watertown, Connecticut. State Order No. 8032 was effective on November 29, 1989.

(ii) Additional material.

(A) Technical Support Document prepared by the Connecticut DEP providing a complete description of the reasonably available control technology determination imposed on The Heminway & Bartlett Manufacturing Company.

(56) Revisions of the State Implementation Plan submitted by the Connecticut Department of Environmental Protection on January 19, 1989, July 28, 1989, and January 26, 1990 (with attached letter of November 28, 1989).

(i) *Incorporation by reference.*

(A) Letters from the Connecticut Department of Environmental Protection dated January 19, 1989, July 28, 1989, and January 26, 1990, (with attached letter of November 28, 1989) submitting revisions to the Connecticut State Implementation Plan.

(B) Section 22a–174–1 of the Regulations of the Connecticut State Agencies Concerning Abatement of Air Pollution entitled ''Definitions,'' effective in the State of Connecticut on October 3, 1989.

(C) Subsection 22a–174–3(k) of the Regulations of the Connecticut State Agencies Concerning Abatement of Air Pollution entitled ''Requirements for the Prevention of Significant Deterioration (PSD) Program,'' effective in the State of Connecticut on October 3, 1989.

(D) Section 22a–174–2, subsections 22a–174–3(a) through (j) and (l), subsection 22a–174–8(c), subsection 22a–174–20(ee), and subsection 22a–174–4(d) of the Regulations of the Connecticut State Agencies Concerning Abatement of Air Pollution entitled ''Permits to Construct and Permits to Operate Stationary Sources or Modifications,'' effective in the State of Connecticut on February 1, 1989.

(E) Connecticut's Ambient Impact Analysis Guideline dated July 1989 as revised by letter on January 26, 1990.

(ii) *Additional materials.*

(A) State Implementation Plan narrative entitled ''New Source Review.''

(B) Letter from the Connecticut Department of Environmental Protection regarding implementation of BACT.

(C) Nonregulatory portions of the State Submittal.

(57) [Reserved]

(58) Revisions to the State Implementation Plan submitted by the Connecticut Department of Environmental Protection on November 9, 1989, and September 12, 1991.

(i) *Incorporation by reference.* (A) Letters from the Connecticut Department of Environmental Protection dated November 9, 1989, and September 12, 1991, submitting revisions to the Connecticut State Implementation Plan.

(B) Section 22a–174–20 of the Regulations of the Connecticut Department of Environmental Protection Concerning Abatement of Air Pollution, effective October 31, 1989, except for the last sentence of 22a–174–20(aa)(7).

(59) Revisions to the State Implementation Plan submitted by the Connecticut Department of Environmental Protection on March 24 and April 23, 1992.

(i) Incorporation by reference.

(A) Letter from the Connecticut Department of Environmental Protection dated April 14, 1992, submitting a revision to the Connecticut State Implementation Plan.

(B) State Order No. 1073B and attached compliance timetable for the Stone Connecticut Paperboard Corporation of Uncasville, CT. State Order

No. 1073B was effective on February 14, 1992.

(C) Letter from the Connecticut Department of Environmental Protection dated March 24, 1992, submitting a revision to the Connecticut State Implementation Plan.

(D) State Order No. 7016A and attached compliance timetable for the Hartford Hospital of Hartford, CT. State Order No. 7016A was effective on February 5, 1992.

(ii) Additional materials.

(A) Memorandum dated August 17, 1989, approving the modeling analysis for the Stone Container Co.

(B) Modeling Study dated August 9, 1989, for the Stone Container Co.

(C) State Order No 1073A, dated June 12, 1990, and effective July 9, 1990.

(D) Memorandum dated January 3, 1990, approving the modeling analysis for the Hartford Hospital.

(E) Modeling study dated December 28, 1989, for the Hartford Hospital.

(60) [Reserved]

(61) Revisions to the State Implemetation Plan submitted by the Connecticut Department of Environmental Protection on February 28, 1991.

(i) Incorporation by reference.

(A) Letter from the Connecticut Department of Environmental Protection dated February 28, 1991, submitting a revision to the Connecticut State Implementation Plan.

(B) State Order No. 7017 and attached compliance timetable for the Connecticut Light and Power Company of Montville, Connecticut. State Order No. 7017 was effective on February 25, 1991.

(ii) Additional materials.

(A) Memorandum dated September 14, 1990, approving the modeling analysis for Connecticut Light and Power.

(B) Letter dated April 23, 1991, confirming that the revised configuration approved by State Order No. 7017 will not lead to violations.

(C) Modeling Study dated January 26, 1990, for Connecticut Light and Power.

(62) Revisions to the State Implementation Plan submitted by the Connecticut Department of Environmental Protection on January 12, 1993.

(i) Incorporation by reference.

(A) Letter from the Connecticut Department of Environmental Protection, dated January 12, 1993, submitting a revision to the Connecticut State Implementation Plan.

(B) Section 22a–174–30 of the Connecticut Regulations for the Abatement of Air Pollution, entitled ''Dispensing of Gasoline/Stage II Vapor Recovery,'' dated November 1992.

(C) Letter from the Connecticut Secretary of State's office indicating that the regulation entitled ''Dispensing of Gasoline/Stage II Vapor Recovery'' became effective on November 24, 1992.

(ii) Additional materials.

(A) Nonregulatory portions of the submittal.

(B) Connecticut Department of Environmental Protection document entitled ''Narrative of SIP Revision: Stage II Vapor Recovery,'' dated January 1993.

(63) Revisions to the State Implementation Plan submitted by the Connecticut Department of Environmental Protection on March 11, 1993.

(i) Incorporation by reference.

(A) Letter from the Connecticut Department of Environmental Protection dated March 11, 1993, submitting a revision to the Connecticut State Implementation Plan.

(B) Connecticut State Order No 7019 dated March 11, 1993, and effective in the State of Connecticut on February 19, 1993.

(ii) Additional materials.

(A) Air Quality Modeling Analysis to Demonstrate SO_2 CAAQS/NAAQS Compliance at the Hamilton Standard Division of United Technologies Corporation Windsor Locks CT; June 1991.

(64) [Reserved]

(65) Revisions to the State Implementation Plan establishing a Small Business Stationary Source Technical and Environmental Compliance Assistance Program were submitted by the Connecticut Department of Environmental Protection on January 12 and August 9, 1993.

(i) Incorporation by reference.

(A) Letter from the Connecticut Department of Environmental Protection dated January 12, 1993, submitting a revision to the Connecticut State Implementation Plan.

(B) Revisions to the State Implementation Plan for the Small Business Stationary Source Technical and Environmental Compliance Assistance Program dated January 1993 and effective on January 12, 1993.

(C) Letter from the Connecticut Department of Environmental Protection dated August 9, 1993, clarifying and updating the January 12, 1993, submittal.

(ii) Additional materials.

(A) Letter from the Connecticut Department of Environmental Protection dated April 6, 1994, clarifying the January 12, 1993, submittal.

(B) Other non-regulatory portions of the State's submittal.

(66) Revisions to the State Implementation Plan submitted by the Connecticut Department of Environmental Protection on January 12, 1993.

(i) Incorporation by reference.

(A) Letter from the Connecticut Department of Environmental Protection dated January 12, 1993 submitting a revision to the Connecticut State Implementation Plan.

(B) Section 22a–174–4(c)(1) of Connecticut Regulations for the Abatement of Air Pollution, under the section entitled ''Recordkeeping and Reporting.'' Section 22a–174–4(c)(1) was previously numbered as 19–508–4(c)(1) in Connecticut's SIP. 19–508–4(c)(1) in Connecticut's SIP. 19–508–4 became effective in the State of Connecticut on October 31, 1977. Connecticut developed an emission statement program using the existing regulatory authority given by section 22a–174–4(c)(1) under the section entitled ''Reporting and Recordkeeping''.

(ii) Additional information.

(A) State implementation Plan narrative entitled ''Revision to State Implementation Plan for Air Quality Emission Statements'' which addresses emission statement requirements not discussed specifically in Section 22a–174–4(c)(1).

(B) Nonregulatory portions of the submittal.

(67) [Reserved]

(68) Revisions to the State Implementation Plan submitted by the Connecticut Department of Environmental Protection on March 24, 1994, May 20, 1994, and March 4, 1994.

(i) Incorporation by reference.

(A) Letter from the Connecticut Department of Environmental Protection dated March 24, 1994 submitting a revision to the Connecticut State Implementation Plan.

(B) Letter from the Connecticut Department of Environmental Protection dated May 20, 1994 submitting a supplemental revision to the Connecticut State Implementation Plan.

(C) State Order No. 8073: State of Connecticut vs. City of New Haven (effective September 24, 1993) and attached plan titled ''Remedial Action Plan for Prevention of Airborne Particulate Matter and Fugitive Discharge of Visible Emissions in the Alabama Street/East Shore Parkway Area of New Haven.''

(D) State Order No. 8074: State of Connecticut vs. Waterfront Enterprises, Inc. (effective November 5, 1993) and attached plan titled ''Proposed Operation Plan in Response to Unilateral Order (September 20, 1993).''

(E) State Order No. 8075: State of Connecticut vs. Laydon Construction, (effective September 21, 1993) and attached plan titled ''Plan for Control of Fugitive Emissions of PM10 (September 21, 1993).''

(F) State Order No. 8076: State of Connecticut vs. United Illuminating Company (effective December 2, 1993) and attached plan titled ''Remediation Plan for Fugitive Emissions: Alabama Street and Connecticut Avenue, New Haven, Connecticut (November 19, 1993).''

(G) State Order No. 8076c: State of Connecticut vs. M. J. Metals, Inc. (effective June 18, 1993).

(H) State Order No. 8078: State of Connecticut vs. New Haven Terminal, Inc. (effective November 15, 1993) and attached plan titled ''Fugitive Dust Control Plan (Revised January 19, 1994).''

(I) State Order No. 8079: State of Connecticut vs. Yankee Gas Services Company (effective September 24, 1993) and attached plan titled ''Revised Compliance Plan for Consent Order No. 8079 (August 31, 1993).''

(J) Letter from the Connecticut Department of Environmental Protection dated March 4, 1994 (received March 16, 1995) submitting two amendments to the Regulations of Connecticut State

Agencies concerning abatement of air pollution: amended Sections 22a–174–24(f) and –24(g) ''Connecticut primary and secondary ambient air quality standards for particulate matter'' and amended Sections 22a–174–6(a) and –6(b) '''Air Pollution' emergency episode procedures'' (both effective July 7, 1993).

(K) Amended Regulations of Connecticut State Agencies: amended Sections 22a–174–24(f) and –24(g) ''Connecticut primary and secondary ambient air quality standards for particulate matter'' and amended Sections 22a–174–6(a) and –6(b) '''Air Pollution' emergency episode procedures'' (both effective July 7, 1993).

(ii) Additional materials.

(A) An attainment plan and demonstration which outlines Connecticut's control strategy and for attainment and maintenance of the PM10 NAAQS, implements and meets RACM and RACT requirements, and provides contingency measures for New Haven.

(B) Nonregulatory portions of the submittal.

(69) Connecticut submitted the Oxygenated Gasoline Program and revisions on January 11, 1993, January 12, 1993, January 14, 1993, and August 1, 1995. This submittal satisfied the requirements of section 211(m) of the Clean Air Act, as amended.

(i) Incorporation by reference.

(A) Letters dated January 11, 1993 and January 12, 1993 which included the oxygenated gasoline program, Regulations of Connecticut State Agencies (RCSA) Section 22a–174–28, with an effective date of November 2, 1992.

(B) A letter dated January 14, 1993 requesting that the RCSA Section 22a–174–28, as submitted on January 11, 1993 and January 12, 1993, be adopted as part of Connecticut's SIP.

(C) A letter dated August 1, 1995, requesting that a revision to RCSA Section 22a–174–28(a), with an effective date of July 26, 1995, be approved and adopted as part of Connecticut's SIP.

(ii) Additional materials.

(A) The Technical Support Document for the Redesignation of the Hartford Area as Attainment for Carbon Monoxide submitted on September 30, 1994.

(B) Nonregulatory portions of submittals.

[37 FR 10855, May 31, 1972]

EDITORIAL NOTE: For FEDERAL REGISTER citations affecting §52.370, see the List of CFR Sections Affected in the Finding Aids section of this volume.

§52.371 Classification of regions.

The Connecticut plan was evaluated on the basis of the following classifications:

Air quality control region	Pollutant				
	Particulate matter	Sulfur oxides	Nitrogen dioxide	Carbon monoxide	Ozone
New Jersey–New York–Connecticut Interstate	I	I	I	I	I
Hartford–New Haven–Springfield Interstate	I	I	III	I	I
Northwestern Intrastate	III	III	III	III	III
Eastern Intrastate	II	III	III	III	III

[37 FR 10855, May 31, 1972, as amended at 39 FR 16346, May 8, 1974; 45 FR 84787, Dec. 23, 1980]

§52.372 [Reserved]

§52.373 Approval status.

With the exceptions set forth in this subpart, the Administrator approves Connecticut's plan, as identified in §52.370 for the attainment and maintenance of the national standards under section 110 of the Clean Air Act. Furthermore, the Administrator finds the plan satisfies all requirements of Part D, Title I, of the Clean Air Act, as amended in 1977, except as noted below. In addition, continued satisfaction of the requirements of Part D for the ozone portion of the SIP depends on the adoption and submittal of RACT requirements by January 1, 1981, for the sources covered by CTGs issued between January 1978 and January 1979 and adoption and submittal by each subsequent January of additional RACT requirements for sources covered

by CTGs issued by the previous January.

(a) The Administrator approves the general procedures of the state's sulfur control regulations (19–508–19) and accompanying narrative submitted on October 23, 1981, and November 4, 1981, and identified under § 52.370, paragraph (c)(18), provided that any individual source approvals granted by the state under the Air Pollution Control/Energy Trade Option and solid fuel burning permitting system are submitted to EPA as SIP revisions.

(b) The Administrator approves the total suspended particulate regulation for foundry sand processes as submitted and identified under paragraph (c)(22) of this section. This includes *only* the requirement to remove ninety percent of the particulate matter and *not* the requirement to emit not more than 0.75 pounds of particulate per ton of material cast, a provision which may be found in state regulation 19–508–18(f)(3).

[45 FR 84787, Dec. 23, 1980, as amended at 46 FR 56615, Nov. 18, 1981; 47 FR 41959, Sept. 23, 1982]

§ 52.374 Attainment dates for national standards.

The following table presents the latest dates by which the national standards are to be attained. The dates reflect the information presented in Connecticut's plan.

Air quality control region[1] and nonattainment area	Pollutant						
	TSP		SO_2		NO_2	CO	O_3
	Primary	Secondary	Primary	Secondary			
AQCR 41: Eastern Ct. Intrastate	a	b	a	c	a	a	d
AQCR 42:							
Hartford-New Haven-Springfield Interstate	.....	b	a	c	a	d	d
Waterbury	e	.....	.....	.....	.....	.....	.....
Remainder of AQCR	a	.....	.....	.....	.....	.....	.....
AQCR 43:							
NY–NJ–CT Interstate	.....	b	a	c	a	d	d
Greenwich	e	.....	.....	.....	.....	.....	.....
Remainder of AQCR	a	.....	.....	.....	.....	.....	.....
AQCR 44: Northwestern Ct. Interstate	a	b	a	c	a	a	d

[1] Sources subject to plan requirements and attainment dates established under section 110(a)(2)(A) prior to the 1977 Clean Air Act Amendments remain obligated to comply with those requirements by the earlier deadlines. The earlier attainment dates are set out at 40 CFR 52.374 (1979).

a. Air quality levels presently below primary standards or area is unclassifiable.
b. 18 month extension for plan submittal granted; attainment date not yet proposed.
c. Air quality levels presently below secondary standards or area is unclassifiable.
d. December 31, 1987.
e. December 31, 1982.

[45 FR 84787, Dec. 23, 1980]

§ 52.375 Certification of no sources.

The State of Connecticut has certified to the satisfaction of EPA that no sources are located in the state which are covered by the following Control Technique Guidelines:

(a) Large Petroleum Dry Cleaners.

(b) Natural Gas/Gasoline Processing Plants.

(c) Air Oxidation Processes/SOCMI.

(d) Manufacturers of High-density Polyethylene and Polypropylene Resins.

[50 FR 37178, Sept. 12, 1985, as amended at 53 FR 17936, May 19, 1988]

§ 52.376 Control strategy: Carbon Monoxide.

(a) Approval-On January 12, 1993, the Connecticut Department of Environmental Protection submitted a revision to the carbon monoxide State Implementation Plan for the 1990 base year emission inventory. The inventory was submitted by the State of Connecticut to satisfy Federal requirements under section 182(a)(1) of the Clean Air Act as amended in 1990, as a revision to the carbon monoxide State Implementation Plan.

(b) Approval-On September 30, 1994, the Connecticut Department of Environmental Protection submitted a request to redesignate the Hartford/New Britain/Middletown Area carbon monoxide nonattainment area to attainment for carbon monoxide. As part of the redesignation request, the State submitted a maintenance plan as required by 175A of the Clean Air Act, as amended in 1990. Elements of the section 175A maintenance plan include a base year (1993 attainment year) emission inventory for carbon monoxide, a demonstration of maintenance of the carbon monoxide NAAQS with projected emission inventories to the year 2005 for carbon monoxide, a plan to verify continued attainment, a contingency plan, and an obligation to submit a subsequent maintenance plan revision in 8 years as required by the Clean Air Act. If the area records a violation of the carbon monoxide NAAQS (which must be confirmed by the State), Connecticut will implement one or more appropriate contingency measure(s) which are contained in the contingency plan. The menu of contingency measure includes enhanced motor vehicle inspection and maintenance program and implementation of the oxygenated fuels program. The redesignation request and maintenance plan meet the redesignation requirements in sections 107(d)(3)(E) and 175A of the Act as amended in 1990, respectively. The redesignation meets the Federal requirements of section 182(a)(1) of the Clean Air Act as a revision to the Connecticut Carbon Monoxide State Implementation Plan for the above mentioned area.

[60 FR 55320, Oct. 31, 1995]

§§52.377—52.379 [Reserved]

§52.380 Rules and regulations.

(a) All facilities owned, operated or under contract with the Connecticut Transportation Authority shall comply in all respects with Connecticut Regulations for the Abatement of Air Pollution sections 19–508–1 through 19–508–25 inclusive, as approved by the Administrator.

(b) For the purposes of paragraph (a) of this section the word ''Administrator'' shall be substituted for the word ''Commissioner'' wherever that word appears in Connecticut Regulations for the Abatement of Air Pollution sections 19–508–1 through 19–508–25 inclusive, as approved by the Administrator.

(c) The June 27 and December 28, 1979, February 1, May 1, September 8 and November 12, 1980, revisions are approved as satisfying Part D requirements under the following conditions:

(1) [Reserved]

(2) Submittal by December 15, 1980, of a revision to Regulation 19–508–20 (1) (solvent metal cleaning) to be consistent with the CTG or a showing that the VOC emissions in the present regulation are within five (5) percent of the VOC emissions which would be allowed if the CTG recommendations were followed.

(d) Non-Part D-No Action: EPA is neither approving nor disapproving the following elements of the revisions:

(1)–(2) [Reserved]

(3) The program to review new and modified major stationary sources in attainment areas (prevention of significant deterioration).

(4) Permit fees

(5) Stack height regulations

(6) Interstate pollution requirements

(7) Monitoring requirements

(8) Conflict of interest provisions.

(9) Use of 1 percent sulfur content fuel by the following residual oil burning sources, identified under §52.370, paragraph (c)(18).

(i) Northeast Utilities, HELCO Power Station in Middletown,

(10) Emergency Fuel Variance provisions of Regulation 19–508–19 (a)(2)(ii) identified under §52.370 paragraph (c)(18).

(e) *Disapprovals.* (1) Regulation 19–508–19(a)(9) concerning coal use at educational and historical exhibits and demonstrations, identified under §52.370, (c)(18).

(2) Regulation 19–508–19, subsection (a)(4)(iii)(C) and (a)(4)(iii)(E) concerning fuel merchants, identified under § 52.370, paragraph (c)(18).

[40 FR 23280, May 29, 1975, as amended at 45 FR 84787, Dec, 23, 1980; 46 FR 34801, July 6, 1981; 46 FR 56615, Nov. 18, 1981; 46 FR 62062, Dec. 22, 1981; 47 FR 763, Jan. 7, 1982; 47 FR 36823, Aug. 24, 1982; 47 FR 41959, Sept. 23, 1982; 47 FR 49646, Nov. 2, 1982; 47 FR 51129, Nov. 12, 1982; 48 FR 5724, Feb. 8, 1983; 50 FR 50907, Dec. 13, 1985]

§ 52.381 Requirements for state implementation plan revisions relating to new motor vehicles.

Connecticut must comply with the requirements of § 51.120.

[60 FR 4737, Jan. 24, 1995]

§ 52.382 Significant deterioration of air quality.

(a) The requirements of sections 160 through 165 of the Clean Air Act are not met, since the plan does not include approvable provisions for the NO_2 increments under the prevention of significant deterioration program.

(b) The increments for nitrogen dioxide and related requirements promulgated on October 17, 1988 (53 FR 40671) to 40 CFR 52.21(b) through (w) are hereby incorporated and made part of the applicable State Implementation Plan for the State of Connecticut.

[58 FR 10964, Feb. 23, 1993]

§ 52.383 Stack height review.

The State of Connecticut has declared to the satisfaction of EPA that no existing emission limitations have been affected by stack height credits greater than good engineering practice or any other prohibited dispersion techniques as defined on EPA's stack height regulations as revised on July 8, 1985. Such declarations were submitted to EPA on February 21, 1986, and May 27, 1986.

[52 FR 49407, Dec. 31, 1987]

Subpart I—Delaware

§ 52.420 Identification of plan.

(a) Title of plan: ''State of Delaware Implementation Plans for Attainment and Maintenance of National Ambient Air Quality Standards.''

(b) The plan was officially submitted on January 28, 1972.

(c) The plan revisions listed below were submitted on the dates specified.

(1) Certification that public hearing was held on plan submitted on February 11, 1972, by the Department of Natural Resources and Environmental Control.

(2) Information on the geometric standard deviations of air quality data submitted on March 7, 1972, by the Department of Natural Resources and Environmental Control.

(3) Miscellaneous non-regulatory clarifications and amendments to the plan submitted on May 5, 1972, by the Department of Natural Resources and Environmental Control.

(4) Specification of attainment dates submitted on June 2, 1972, by the Department of Natural Resources and Environmental Control.

(5) Periodic stack sampling requirements submitted on June 5, 1972, by the Department of Natural Resources and Environmental Control.

(6) Miscellaneous non-regulatory additions to the plan submitted on July 20, 1972, by the Delaware Water and Air Resource Commission.

(7) Backup information for the attainment of the Secondary SO_2 standards in New Castle County submitted on November 14, 1972, by the Department of Natural Resources and Environmental Control.

(8) Backup information for the attainment of the Secondary SO_2 standards in New Castle County submitted on December 19, 1972, by the Department of Natural Resources and Environmental Control.

(9) Amendments to Regulations I through XIV inclusive of the Delaware Regulations Governing Air Pollution, and Amendments to the Delaware Environmental Protection Act; submitted on January 16, 1975 by the Delaware Department of Natural Resources and Environmental Control.

(10) Amendments to Section V (Surveillance) of the Delaware State Implementation Plan and amendments to Section V (Surveillance) of the New Castle County Portion of the Delaware State Implementation Plan, covering changes to the air pollution monitoring system; submitted on September 3,

1975 by the Delaware Department of Natural Resources and Environmental Control.

(11) A Consent Order for the Getty Oil Company and the Delmarva Power and Light Company submitted on August 5, 1975 by the Delaware Department of Natural Resources and Environmental Control.

(12) Amendments to Regulations No. V, XIV, XVII, and a newly adopted Regulation No. XXIII (Standards of Performance for Steel Plants: Electric Arc Furnaces); and a Court of Chancery injunction to control charging and tapping emissions for the Phoenix Steel Corporation's plant in Claymont, Delaware submitted on December 2, 1977 and October 5, 1978, respectively, by the Department of Natural Resources and Environmental Control.

(13) On May 3, 1979, the Governor submitted the nonattainment area plan for New Castle County with respect to ozone.

(14) A revision submitted by the State of Delaware on October 5, 1978 to eliminate certain outdated requirements relating to Regulations V and XVIII and correction of typographical errors relating to Regulations III, VIII, and XV.

(15) A revision submitted by the State of Delaware on March 19, 1980 which is intended to establish an Ambient Air Quality Monitoring Network.

(16) Revisions to Delaware's Regulations I, II, III, IV, VIII, XII, XIV, XV, and XVII submitted by the Delaware Department of Natural Resources and Environmental Control on March 19, 1980.

(17) A revision submitted by the State of Delaware on September 7, 1977, consisting of an amendment to Delaware Regulations Governing Air Pollution, Regulation XVII, establishing continuous emission monitoring regulations.

(18) A revision submitted by the District of Columbia on May 16, 1979 which is intended to establish an Ambient Air Quality Monitoring Network.

(19) A commitment to use available grants and funds to establish, expand, and improve public transportation to meet basic transportation needs, submitted on August 15, 1979 by the Delaware Transportation Authority.

(20) A revised schedule for implementation of Delaware's inspection and maintenance program submitted by September 10, 1980 by the Secretary, Delaware Department of Natural Resources and Environmental Control.

(21) [Reserved]

(22) A revision submitted by the State of Delaware on August 7, 1978 consisting of two Executive Orders for financial disclosure of certain State officials.

(23) Amendments to Regulations I (Definitions) and XXIV (Control of Organic Compounds Emissions) submitted on December 23, 1980 by the Secretary, Delaware Department of Natural Resources and Environmental Control.

(24) A State Implementation Plan for the Control of lead emissions submitted on December 23, 1980 by the Secretary, Delaware Department of Natural Resources and Environmental Control.

(25) A revised schedule for implementation of Delaware's inspection and maintenance program submitted on December 29, 1980 by the Secretary, Delaware Department of Natural Resources and Environmental Control.

(26) Amendments to Regulation II (Registration and Permits) and XIII (Open Burning) [non-regulatory] of the Delaware Regulations governing the Control of Air Pollution submitted on September 22, 1981 by the Secretary, Department of Natural Resources and Environmental Control.

(27) Amendments to Section 9.4 (Surface Coating operations) and 13.2 (Dry Cleaning) of Regulation XXIV (Control of Volatile Organic Compound Emissions) of the Delaware Regulations governing the Control of Air Pollution submitted on September 22, 1981 by the Secretary, Department of Natural Resources and Environmental Control.

(28) Amendments to Regulations I (Definitions) and XXV Section (Requirements for Preconstruction Review) pertaining to prevention of significant deterioration submitted on December 29, 1980 by the Secretary, Delaware Department of Natural Resources and Environmental Control.

(29) A February 27, 1981 letter from the Delaware Department of Natural Resources and Environmental Control

to EPA pertaining to procedures of notifying EPA of any PSD application for sources locating within 100 kilometers of a Class I PSD area, as well as ensuring EPA in any monitoring procedure, that the requirements of 40 CFR part 58 will be specified.

(30) A revision submitted by the State of Delaware on October 14, 1982, consisting of amendments to Regulation No. II—Permits.

(31) Plan Revision providing for attainment of the Ozone standard submitted by *John E. Wilson, III* to EPA on July 6, 1982.

(32) Stack height regulation, public notification plan, and other miscellaneous revisions submitted to EPA on April 20, 1983.

(33) A revision submitted by the State of Delaware on September 26, 1983 consisting of amendments to Section 2.3 of Regulation Number XIV, Section 2.3 of Regulation Number VII, and Section 9.7 and Table I(a) to Regulation Number XXIV of the DelawareRegulations Governing the Control of Air Pollution.

(34) Revisions to the Delaware Regulations Governing the Control of Air Pollution were submitted by the Secretary on August 8, 1984.

(i) Incorporation by reference. (A) Amendments to Regulations II (Permits); XIII (Open Burning); XIV (Visible Emissions); and XVII (Source Monitoring, Record Keeping and Reporting).

(35) Revisions submitted by the State of Delaware on June 5, 1985 amending the State of Delaware Regulations Governing the Control of Air Pollution, Regulation Nos. VIII, XIII, and XXVI.

(i) Incorporation by reference. (A) Revisions via Order No. 85–A–3 Exhibit A Amendment Nos. 2, 3, and 5, to the State of Delaware Regulations Governing the Control of Air Pollution, Regulations VIII sections 2.1–2.4, XIII section 1.2, and XXVI Table 2, pertaining to sulfur in fuel oil, open burning, and motor vehicle emission testing, respectively. These revisions were adopted by the Department of Natural Resources and Environmental Control on May 9, 1985.

(ii) Additional information. (A) A letter dated July 9, 1985 from Secretary John E. Wilson, III to Mr. James M. Seif, withdrawing certain portions of the original SIP revision request pertaining to asbestos, New Source Performance Standards (Regulation No. XX), and Emission Standards for Hazardous Air Pollutants (Regulation No. XXI).

(B) A letter dated July 9, 1986 from Mr. Robert R. French to Mr. James Sydnor withdrawing the request to delete the definitions of ''Reconstruction'' and ''Capital Expenditure'' from their new source review regulations (Regulations I and XXV).

(36) [Reserved]

(37) Revision submitted by the State of Delaware on March 6, 1987, consisting of amendment to Regulation II-Permits.

(i) Incorporation by reference. State of Delaware Order No. 87–A–2 (Introduction, Findings of Fad and (1) of the order which amends section 2.7 of Regulation II) which was issued on February 18, 1987.

(38) Revision to the Delaware State Implementation Plan incorporation of a Conciliatory Order, was submitted on May 31, 1989. The order is designed to reduce ambient sulfur dioxide levels around the Delmarva Power and Light Company's Indian River power plant.

(i) Incorporation by reference.

(A) Letter dated May 31, 1989 from the State of Delaware containing the Conciliatory Order for incorporation into the Delaware State Implementation Plan.

(B) Conciliatory Order issued on May 31, 1989, for Delmarva Power and Light Company's Indian River power plant.

(39) Revisions to the State Implementation Plan were submitted by the Delaware Department of Natural Resources and Environmental Control on March 6, 1987 (Secretary's Order No. 87–A–2). Revisions to the State Implementation Plan submitted by the Delaware Department of Natural Resources and Environmental Control on March 21, 1988 (Secretary's Order No. 89–A–5).

(i) Incorporation by reference.

(A) Letter received on March 6, 1987, from the Delaware Department of Natural Resources and Environmental Control submitting revisions to the State Implementation Plan for EPA approval (portions of Secretary Order No. 87–A–2).

(B) Letter dated December 21, 1988, from the Delaware Department of Natural Resources and Environmental Control submitting revisions to the State Implementation Plan for EPA approval (portions of Secretary Order No. 89–A–5).

(C) Only those portions of Secretary's Order No. 87–A–2 issued on February 18, 1987, which amend Regulation No. II, Stack Heights at sections 2.2, 2.3, 2.4, and 2.5, pertaining to the definitions of the terms excessive concentrations, nearby stack, and stack in existence; and at sections 3.1, 3.2, and 3.3, pertaining to the requirements for new and existing sources.

(D) Only those portions of Secretary's Order No. 89–A–5, issued on December 7, 1988, which amend Regulation No. XXV, Requirements for Preconstruction Review, at section 3.9(A) and Regulation No. XXVII, Stack Heights at section 2 to include definitions of the terms emission limitation and emission standard.

(40) [Reserved]

(41) Revision submitted by the State of Delaware on April 28, 1988 amending the hydrocarbon motor vehicle emission testing standards in Regulation XXVI of the Delaware *Regulations Governing the Control of Air Pollution*.

(i) Incorporation by reference. (A) Revisions via Order 88–A–2, exhibit A, parts A and B, which is an amendment to Table 2 of Technical Memorandum Number 2 entitled ''Motor Vehicle Inspection and Maintenance Program Emission Limit Determination''. This revision was issued by the State on December 29, 1987.

(42) Revisions to the State Implementation Plan submitted by the Delaware Department of Natural Resources and Environmental Control on December 12, 1985, pertaining to Delaware Regulation No. XXIV which includes an alternative RACT standard for the zinc-rich weld-through primer coating.

(i) Incorporation by reference.

(A) Letter from the Delaware Department of Natural Resources and Environmental Control dated December 12, 1985 submitting a revision to the Delaware State Implementation Plan, regarding changes to Regulation No. XXIV to remove the word ''yearly'' from Tables I and I(a) and to propose an alternative RACT standard for the zinc-rich primer coating.

(B) Those portions of Exhibit 13 of Order No. 85–A–5 amending Regulation No. XXIV by 1) deleting the word ''yearly'' in Tables I and I(a) and (2) adopting 4.0 as the Reasonably Available Control Technology (RACT) emission limit for Zinc-rich Primer used in automobile surface coating.

(ii) Additional materials.

(A) Remainder of the State submittal.

(43) Revision to the State Implementation Plan submitted by the Delaware Department of Natural Resources and Environmental Control on March 6, 1990, amending portions of Regulation XXVI (26) of the Delaware *Regulations Governing the Control of Air Pollution* by expanding the I/M program statewide, adopting CO cutpoints statewide, modifying the test procedures, and increasing the waiver cost repair limit.

(i) Incorporation by reference.

(A) Letter from the Delaware Department of Natural Resources and Environmental Control dated March 6, 1990 submitting a revision to the Delaware State Implementation Plan.

(B) Sections 1, 2, 4 and 6 of Regulation XXVI (26), Motor Vehicle Emissions Inspection Program, of the Delaware *Regulations Governing the Control of Air Pollution* and the two (2) Technical Memoranda, Numbers 1 and 2, which are appendices to Regulation XXVI (26), of the Delaware *Regulations Governing the Control of Air Pollution*.

(ii) Additional materials—remainder of State submittal.

(44) Revisions to the State Implementation Plan submitted by the Delaware Department of Natural Resources and Environmental Control on July 6, 1990.

(i) Incorporation by reference.

(A) A letter from the Delaware Department of Natural Resources and Environmental Control dated July 6, 1990 submitting a revision to the Delaware State Implementation Plan, effective July 3, 1990.

(B) Regulation 1—Definitions and Administrative Principles.

(C) Regulation 24—Section 1, General Provisions; section 6, Bulk Gasoline Plants; section 8, Petroleum Liquid

Storage; section 9, Surface Coating Operations; section 14, Petroleum Refinery Component Leaks; and section 15, Rotogravure and Flexographic Printing.

(45) Revisions to the State Implementation Plan submitted by the Delaware Department of Natural Resources and Environmental Control on March 9, 1990.

(i) Incorporation by reference.

(A) Letter from the Delaware Department of Natural Resources and Environmental Control dated March 6, 1990, submitting a revision to the Delaware State Implementation Plan.

(B) The portion of Secretary Order 90–A–1 that amends Regulation II—Permits—Section 3.1.b.1; and Regulation XXV—Requirements for Preconstruction Review—Sections 1.9 (N) 1–4, 3.1, and 3.9. The amendments to Regulation II and Regulation XXV were adopted on January 31, 1990, and were effective on May 15, 1990, in the state of Delaware.

(46) Revisions to the Delaware State Implementation Plan submitted on January 11, 1993 by the Delaware Department of Natural Resources & Environmental Control:

(i) Incorporation by reference. (A) Letter of January 11, 1993 from the Delaware Department of Natural Resources & Environmental Control transmitting Regulation 24—''Control of Volatile Organic Compound Emissions'', effective January 11, 1993.

(B) Regulation 24—''Control of Volatile Organic Compound Emissions'', Sections 1, 2, 3, 4, 5, 6, 7, 8, 9, 13, 14, 15, 16, 17, 18, 19, 20, 21, 22, 23, 24, 25, 26, 27, 28, 29, 30, 31, 32, 33, 34, 35, 37, 38, 39, 40, 41, 42, and Appendices A, B, C, D, E, F, G, & H.

(47) Revisions to the Delaware regulations for particulate matter (PM–10) submitted on April 26, 1988 by the Delaware Department of Natural Resources and Environmental Control:

(i) Incorporation by reference. (A) Letter of April 26, 1988 from the Department of Natural Resources and Environmental Control transmitting a revision to the Delaware State implementation plan for particulate matter (PM–10) Group III areas.

(B) Revisions via Order No. 88–A–5, exhibit A, and Table 1. The Order amends the following Delaware Regulations Governing the Control of Air Pollution: Regulation 1—''Definitions and Administrative Principles''; Regulation 3—''Ambient Air Quality Standards''; Regulation 15—''Air Pollution Alert and Emergency Plan''; and Regulation 25—''Requirements for Preconstruction Review''. The revisions were adopted on March 29, 1988 and became effective immediately.

(ii) Additional materials.

(A) Remainder of the State implementation plan revision submitted by the Delaware Department of Natural Resources and Environmental Control on April 26, 1988.

(48)–(49) [Reserved]

(50) Revisions to the Delaware State Implementation Plan submitted on January 11, 1993, by the Delaware Department of Natural Resources & Environmental Control:

(i) Incorporation by reference.

(A) Letter of January 11, 1993, from the Delaware Department of Natural Resources & Environmental Control submitting and requesting approval of Stage II Vapor Recovery Regulations for Gasoline Dispensing Facilities.

(B) Addition of Section 36–Stage II Vapor Recovery and Appendix J–Procedures for Implementation of Regulations Covering Stage II Vapor Recovery Systems for Gasoline Dispensing Facilities to Regulation No. 24, ''Control of Volatile Organic Compound Emissions.'' Section 36 and Appendix J have an effective date of January 11, 1993.

(ii) Additional materials.

(A) Delaware Secretary's Order No. 93–00078, issued January 11, 1993, adopting Stage II Vapor Recovery Regulations in the State.

(B) Remainder of the January 11, 1993, State submittal pertaining to Section 36 and Appendix J of Regulation No. 24, Stage II Vapor Recovery at Gasoline Dispensing Facilities.

(51) Revisions to the Delaware State Implementation Plan submitted on January 20, 1994 by the Delaware Department of Natural Resources & Environmental Control:

(i) Incorporation by reference. (A) Letter dated January 20, 1994, from the Delaware DNREC transmitting an amendment to Regulation 24, ''Control

of Volatile Organic Compound Emissions'', Section 43—''Other Facilities that Emit VOCs'', effective November 24, 1993.

(B) Amendment to Regulation 24, ''Control of VOC Emissions'', Section 43—''Other Facilities that Emit VOCs'', Sections 43(a)(1), 43(a)(2), 43(a)(3), 43(a)(4), 43(b)(1), 43(b)(2), 43(c), 43(d), 43(e), and 43(f).

(ii) Additional Material. (A) Remainder of January 11, 1993 and January 20, 1994 State submittal pertaining to Regulation 24 referenced in paragraphs (c)(46)(i) and (c)(51)(i) of this section.

(iii) Additional Information. (A) These rules supersede paragraph (c)(44)(i)(C) of this section.

(52) Revisions to the Delaware State Implementation Plan submitted by the Secretary, Delaware Department of Natural Resources and Environmental Control, on January 11, 1993.

(i) Incorporation by reference.

(A) Letter dated January 11, 1993 from the Secretary, Delaware Department of Natural Resources and Environmental Control, submitting a revision to the Delaware State Implementation Plan.

(B) Amended section 2, Regulation 1 (Definitions and Administrative Principles). Amended section 1, and added new section 7 of Regulation 17 (Source Monitoring, Recordkeeping and Reporting). The amendments to Regulations 1 and 17, and the addition of section 7 of Regulation 17, were effective on January 11, 1993. This revision consists of an emission statement program for stationary sources which emit volatile organic compounds (VOC) and/or nitrogen oxides (NO_X) at or above specified actual emission threshold levels. This program is applicable state-wide.

(ii) Additional material.

(A) Remainder of January 11, 1993 state submittal pertaining to Delaware Emission Statement Program.

(53) Revisions to the Delaware Regulations on the control of volatile organic compound emissions from marine vessel transfer operations submitted on August 26, 1994 by the Delaware Department of Natural Resources & Environmental Control:

(i) Incorporation by reference.

(A) Letter of August 26, 1994 from the Delaware Department of Natural Resources & Environmental Control transmitting Regulation 24, ''Control of Volatile Organic Compound Emissions'', by renumbering existing Section 43, ''Other Facilities that Emit Volatile Organic Compounds,'' to Section 50 and adding a new Section 43, ''Bulk Gasoline Marine Tank Vessel Loading Facilities''.

(B) Administrative changes to Section 50: renumbering existing Section 43 to Section 50, and Section 50(a)(1): renumbering 42 to 43; and the new Section 43, effective August 26, 1994.

(ii) Additional material.

(A) Remainder of August 26, 1994 State submittal pertaining to Regulation 24 referenced in paragraph (c)(53)(i) of this section.

(54) Revisions to the Delaware State Implementation Plan submitted on December 19, 1994 by the Delaware Department of Natural Resources & Environmental Control:

(i) Incorporation by reference.

(A) Letter of December 19, 1994 from the Delaware Department of Natural Resources & Environmental Control transmitting Regulation 24—''Control of Volatile Organic Compound Emissions'', effective November 29, 1994.

(B) Regulation 24—''Control of Volatile Organic Compound Emissions'', Sections 10, 11, 12, 44, 45, 48, and 49 and appendices I, K, L, and M, effective November 29, 1994.

(C) Administrative changes to Regulation 24, Section 2—Definitions: Addition of sections 2(c) Basecoat; 2(j) Clearcoat; 2(x) Gloss flattener; 2(bb) Internal Floating Roof; 2(gg) Liquid-mounted seal; 2(ss) Petroleum; 2(tt) Petroleum Liquid; 2(xx) Primer; 2(jjj) Storage Vessel; 2(mmm) Transfer efficiency; 2(ppp) Vapor-mounted seal; and 2(ttt) Volatile Organic Liquid (VOL); and section 2(zz) by changing ASTM D323–89 to ASTM D323–82, effective November 29, 1994.

(D) An Errata sheet of Regulation 24 with administrative changes to Section 4—4(b) by renumbering section 13 to 10 and section 22 to 23, 4(b)(1)(iii) by renumbering section 13 to 10 and section 22 to 23, 4(c) by renumbering section 22 to 23, 4(d) by renumbering section 22 to 23, 4(e) by renumbering section 13 to 10 and section 22 to 23, 4(e)(2)(iv) by adding the following lines: section

10(e)(1)(iii), section 11(d), section 12(e)(1)(iii), and section 23(e)(1)(iii), 4(e)(x) correcting 50 degrees F to 82 degrees F; Section 8—8(a)(2) by renumbering section 13 to 10; Section 21—21(a)(5) correcting the number 4 to 5; Section 25—25(c)(4)(vi) by changing *calibrated* to calculated; Section 29—29(i)(3)(i)(A) by correcting 0.09 to 0.044 in Hg, 29(i)(3)(i)(B) by correcting 0.09 to 0.044 in Hg; Section 30—30(b) by deleting definitions of *liquid mounted seal and vapor mounted seal* that were added in Section 2—Definitions; Section 31—31(b) by deleting definition of *internal floating roof* that was added to Section 2—Definitions, 31(e)(*ii*) by correcting letter *i* to *ii*; Section 33—33(f)(3) by correcting (c)(3)(*i*)(B) to (c)(3)(ii)(B), Section 35—35(c)(2)(i) by adding *weight*, 35(c)(3)(i) by adding *by weight*; Section 37—37(a)(1) by deleting *of press ready ink*; Section 43—43(a)(1) by renumbering section 13 to 10 and section 42 to 49; Appendix A—(a) by renumbering section 13(c)(1) or section 14 through 43 to section 19 through 50; Appendix D—(a)(2)(iii)(4) by deleting *to be published*, effective November 29, 1994.

(ii) Additional Material.

(A) Remainder of December 19, 1994 State submittal pertaining to Regulation 24 referenced in paragraphs (c)(54)(i).

[37 FR 10856, May 31, 1972]

EDITORIAL NOTE: For FEDERAL REGISTER citations affecting § 52.420, see the List of CFR Sections Affected in the Finding Aids section of this volume.

§ 52.421 Classification of regions.

The Delaware plan was evaluated on the basis of the following classifications:

Air quality control region	Pollutant				
	Particulate matter	Sulfur oxides	Nitrogen dioxide	Carbon monoxide	Photochemical oxidants (hydrocarbons)
Metropolitan Philadelphia Interstate	I	I	III	I	I
Southern Delaware Intrastate	III	III	III	III	III

[37 FR 10856, May 31, 1972, as amended at 39 FR 16345, May 8, 1974]

§ 52.422 Approval status.

(a) With the exceptions set forth in this subpart, the Administrator approves Delaware's plan for the attainment and maintenance of the national standards under section 110 of the Clean Air Act. Furthermore, the Administrator finds that the plan satisfies all requirements of part D, title 1, of the Clean Air Act as amended in 1977, except as noted below. In addition, continued satisfaction of the requirements of part D for the ozone portion of the SIP depends on the adoption and submittal of RACT requirements by July 1, 1980, for the sources covered by CTGs issued between January 1978 and January 1979 and adoption and submittal by each subsequent January of additional RACT requirements for sources covered by CTGs issued by the previous January.

(b) Letter of February 26, 1993, from the Delaware Department of Natural Resources and Environmental Control transmitting a commitment to adopt either the Federal clean fuel fleet program or an alternative substitute program by May 15, 1994.

[45 FR 14558, Mar. 6, 1980, as amended at 58 FR 50848, Sept. 29, 1993]

§ 52.423 1990 Base Year Emission Inventory.

EPA approves as a revision to the Delaware State Implementation Plan the 1990 base year emission inventories for the Delaware ozone nonattainment areas submitted by the Secretary of the Department of Natural Resources and Environmental Control on May 27, 1994. This submittal consists of the 1990 base year point, area, non-road mobile, biogenic and on-road mobile source emission inventories in area for the following pollutants: volatile organic

compounds (VOC), carbon monoxide (CO), and oxides of nitrogen (NO_X).

[61 FR 1841, Jan. 24, 1996]

§§52.424–52.429 [Reserved]

§52.430 Photochemical Assessment Monitoring Stations (PAMS) Program.

On March 24, 1994 the Delaware Department of Natural Resources & Environmental Control submitted a plan for the establishment and implementation of a Photochemical Assessment Monitoring Stations (PAMS) Program as a state implementation plan (SIP) revision, as required by section 182(c)(1) of the Clean Air Act. EPA approved the Photochemical Assessment Monitoring Stations (PAMS) Program on September 11, 1995 and made it part of the Delaware SIP. As with all components of the SIP, Delaware must implement the program as submitted and approved by EPA.

[60 FR 47084, Sept. 11, 1995]

§52.431 [Reserved]

§52.432 Significant deterioration of air quality.

(a) The requirements of sections 160 through 165 of the Clean Air Act are not met, since the plan does not include approvable procedures for preventing the significant deterioration of air quality.

(b) Regulation for preventing significant deterioration of air quality. The provisions of §52.21(l)(2) and (p) are hereby incorporated and made a part of the applicable State plan for the State of Delaware.

(c) Pursuant to 40 CFR 52.21(u) full delegation of authority for all portions of the Federal PSD program, as described in 40 CFR 52.21, was relinquished to the State of Delaware as of June 15, 1981. All applications submitted as of that date and supporting information required pursuant to §52.21 from sources located in the State of Delaware shall be submitted to: Delaware Department of Natural Resources and Environmental Control, Air Resources Section, Division of Environmental Control, Edward Tatnall Building, P.O. Box 1401, Dover, Delaware 19901.

[45 FR 52741, Aug. 7, 1980, and 46 FR 31262, June 15, 1981, as amended at 47 FR 11014, Mar. 15, 1982]

§52.433 Requirements for state implementation plan revisions relating to new motor vehicles.

Delaware must comply with the requirements of §51.120.

[60 FR 4737, Jan. 24, 1995]

§52.460 Small business stationary source technical and environmental compliance assistance program.

(a) On January 11, 1993, the Director of the Delaware Department of Natural Resources and Environmental Control submitted a plan for the establishment and implementation of a Small Business Stationary Source Technical and Environmental Compliance Assistance Program as a State Implementation Plan revision, as required by title V of the Clean Air Act. EPA approved the Small Business Stationary Source Technical and Environmental Compliance Assistance Program on May 17, 1994, and made it a part of the Delaware SIP. As with all components of the SIP, Delaware must implement the program as submitted and approved by EPA.

[59 FR 25572, May 17, 1994]

Subpart J—District of Columbia

§52.470 Identification of plan.

(a) Title of plan: ''Implementation Plan for the Control of Carbon Monoxide, Nitrogen Dioxide, Hydrocarbons, and Oxidants.''

(b) The above plan was officially submitted on January 31, 1972, by the Mayor/Commissioner.

(c) The plan revisions listed below were submitted on the dates specified.

(1) Control strategies for sulfur oxides and particulate matter were defined by the District's ''Implementation Plan for Controlling Sulfur Oxide and Particulate Air Pollutants'' submitted on August 14, 1970, by the District of Columbia.

(2) Addition to Permit to Construct regulation, Section 8–2:720 of the District of Columbia Control Regulations,

plus miscellaneous non-regulatory revisions to the plan submitted April 28, 1972, by the District of Columbia.

(3) Particulate matter emission rate graph submitted on January 29, 1973, by the Department of Environmental Services.

(4) Plan revisions were submitted on January 29, 1973, by the Department of Environmental Services.

(5) Transportation Control Plans for the District of Columbia's portion of National Capital AQCR submitted on April 20, 1973, by the Mayor/Commissioner.

(6) Amendments to the Transportation Control Plan for the District of Columbia submitted on July 9, 1973, by the Mayor/Commissioner.

(7) Amendments to the Transportation Control Plan for the District of Columbia submitted on July 16, 1973, by the Mayor/Commissioner.

(8) Amendments to Sections 8–2:702 (Definitions) and 8–2:707, (Control of Organic Compounds), subsections (a), (b), (c), (d), (e), and (f) of the District of Columbia Air Quality Control Regulations submitted on March 22, 1974 by the Mayor/Commissioner.

(9) Amendments to Sections 8–2:704 and 8–2:705 of the District of Columbia Air Quality Control Regulations submitted on February 25, 1976 by the Mayor.

(10) Section 8–2:709 and Section 8–2:724 are amended to limit particulate emissions to .08 grains per day standard cubic foot at Solid Waste Reduction Center #1 (S.W.R.C. #1) and allow continued operation of S.W.R.C. #1 respectively; submitted July 17, 1975 by the District of Columbia.

(11) Amendments to Sections 8–2:704 (Use of Certain Fuel Oils Forbidden), 8–2:705 (Use of Certain Coal Forbidden), and 8–2:713 (Visible Emissions) of the District of Columbia Air Quality Control Regulations submitted on March 3, 1977 by the Mayor.

(12) Amendments to Sections 8–2:702 (Definitions), 8–2:708 (Fuel Burning Particulate Emission) and 8–2:720 (Permits to Construct or Modify, Permits to Operate); an amendment deleting Appendix 1 from the District of Columbia Air Quality Control Regulations submitted by the Mayor on May 25, 1978.

(13) Amendments to Sections 8–2:704 (Allowable Sulfur Content in Fuel Oil) and 8–2:705 (Allowable Sulfur Content in Coal) of the District's Air Quality Control Regulations submitted on December 27, 1978, by Mayor Walter E. Washington is hereby approved until December 31, 1980.

(14)–(15) [Reserved]

(16) Amendments to Sections 8–2:702 (Definition Changes), 8–2:708 (Performance Testing), 8–2:713 (Visible Emissions), 8–2:718 (Emission Testing), 8–2:726 (Penalties) of the District's Air Quality Control Regulations, and Section 6–812(a)(5) (Penalties) of the District of Columbia's Air Quality Control Act submitted on December 27, 1978 by Mayor Walter E. Washington.

(17) Amendments to Sections 8–2:704 (Allowable Sulfur Content in Fuel Oil) and 8–2:705 (Allowable Sulfur Content in Coal) of the District's Air Quality Control Regulations submitted on December 27, 1978, by Mayor Walter E. Washington are approved indefinitely.

(18) Amendments to Regulations I (Definitions), XXIV (Control of Volatile Organic Compounds Emissions) and XXV (Requirements for Preconstruction Review) submitted on March 19, 1980 by the Secretary, Delaware Department of Natural Resources and Environmental Control.

(19) The Plan revision entitled ''Revisions to the Implementation Plan for the District of Columbia for Attainment of the National Ambient Air Quality Standards for Particulates, Oxidants and Carbon Monoxide'' for all areas designated nonattainment as of March 3, 1978 and September 12, 1978 submitted on December 26, 1979 by the Mayor. Included was a request for revocation and/or revision of sections of subpart J which have been mooted by court decision (*District of Columbia* v. *Costle*, 567 F. 2d 1091 (D.C. Cir. 1977)), Congressional action, or rescission by EPA.

(20) Inspection and Maintenance Program Amendments to the transportation control portion of the nonattainment plan were submitted by the Mayor on September 7, 1979 and May 6, 1981.

(21) Amendments to the District's Air Quality Control Regulations for control of particulate matter, carbon monoxide and ozone were submitted by the Mayor on June 23, 1981.

(22) The Washington, DC Implementation Plan for maintaining the National Ambient Air Quality Standard for lead submitted on October 7, 1982 by the Mayor.

(23) Revision for Public Notification of Air Quality, submitted on December 5, 1983.

(24) Revision for Conflict of Interest procedures, submitted on December 6, 1983.

(25) Plan revision, excluding the required vehicle emission inspection program, providing for attainment of the Ozone and Carbon Monoxide Standards, submitted by the District of Columbia on December 28, 1982 and April 15, 1983.

(26) Revision to the 1982 District of Columbia Ozone and Carbon Monoxide Attainment Plan consisting of an approvable vehicle emission inspection and maintenance program, therefore, completing all necessary requirements for attainment of the Ozone and Carbon Monoxide standards; submitted by the Mayor on May 3, 1985. See paragraph (c)(25) of this section for date of original submittal.

(i) Incorporation by reference.

(A) Amendment to section 604 (Vehicle Inspection: Rejected Vehicles) of Title 18 of the District of Columbia Municipal Regulations as published in the *District of Columbia Register* on November 23, 1984.

(27) Revisions to the State Implementation Plan submitted by the Mayor of the District of Columbia on June 21, 1985, which define and impose RACT to control volatile organic compound emissions from engraving and plate printing sources.

(i) Incorporation by reference.

(A) A letter from the Mayor of the District of Columbia dated June 21, 1985, submitting revision to the District of Columbia State Implementation Plan, and a letter from the District of Columbia Department of Consumer and Regulatory Affairs dated April 1, 1992, formally submitting additional information supplementing the June 21, 1985 submittal.

(B) Section 710 of title 20, submitted June 21, 1985 and effective March 15, 1985.

(28) Revisions to 20 District of Columbia Municipal Regulations (DCMR) pertaining to oxygenated gasoline submitted on October 22, 1993 by the District of Columbia's Department of Consumer and Regulatory Affairs.

(i) Incorporation by reference.

(A) Letter of October 22, 1993 from the District of Columbia's Department of Consumer and Regulatory Affairs transmitting the oxygenated gasoline regulations.

(B) District of Columbia Register dated July 30, 1993 containing 20 DCMR chapter 1, Section 199 definitions for the terms blending plant, distributor, non-oxygenated gasoline, oxygenate, oxygenated gasoline, oxygenated gasoline control period, oxygenated gasoline control area, refiner, refinery, retailer, retail outlet, terminal, wholesale purchaser-consumer; Chapter 5, Section 500, subsections 500.4 and 500.5; chapter 5, section 502, subsection 502.18; Chapter 9, section 904, subsections 904.1 and 904.2, effective September 30, 1993.

(ii) Additional material.

(A) Remainder of October 22, 1993 District of Columbia submittal.

(29)–(31) [Reserved]

(32) Revisions to the District of Columbia Regulations State Implementation Plan submitted on October 22, 1993 by the Government of the District of Columbia Department of Consumer and Regulatory Affairs.

(i) Incorporation by reference.

(A) Letter of October 22, 1993 from the Government of the District of Columbia Department of Consumer and Regulatory Affairs transmitting a revised regulation which require owners of stationary sources to submit emission statements annually.

(B) D.C. ACT 10–56 amendments to District of Columbia Air Pollution Control Act of 1984, Section 20 DCMR 199, specifically the addition of new definitions, and the addition of Section 20 DCMR 500.7. Effective on September 30, 1993.

(33) [Reserved]

(34) Revisions to Title 20 the District of Columbia Municipal Regulations (DCMR) on June 21, 1985 by the District of Columbia:

(i) Incorporation by reference.

(A) Letter of June 21, 1985 from the Mayor of the District of Columbia transmitting Act 5–165, representing the air pollution cotrol regulations codified in 20 DCMR.

(B) The revised provisions of 20 DCMR, effective March 15, 1985, as described below:

(*1*) Chapter 1—General.

Section 100 (Purpose, Scope, and Construction), subsections 100.1 through 100.5
Section 101 (Inspection), subsection 101.1
Section 102 (Orders for Compliance), subsections 102.1 through 102.3
Section 104 (Hearings), subsections 104.1 through 104.5
Section 105 (Penalty), subsections 105.1 through 105.4
Section 106 (Confidentiality of Reports), subsections 106.1 and 106.2
Section 107 (Control Devices or Practices), subsections 107.1 through 107.4
Section 199 The following definitions and abbreviations:

Definitions (Section 199.1)—*Added*: Affected facility, Building, structure, facility, or installation, Cartridge filter, Component, Containers and conveyers of solvent, Crude oil, Cylinder wipe, Emission unit, Federally enforceable, Flexography, Fugitive emission, Gas services, Gas services for pipeline/valves and pressure relief valves, Gravure, Heatset, Hydrocarbon, Ink, Inking cylinder, Innovative control technology, Intaglio, Leaking component, Lease custody transfer, Letterpress, Letterset, Liquid service, Necessary preconstruction, Net emission increase, Offset printing process, Offset lithography, Paper wipe, Perceptible, leak, Petroleum solvent, Plate, Printing, Printing operation, Printing Unit, Refinery operator, Refinery unit, Routing, Secondary emissions, Substrate, Vacuum still, Valves not externally regulated, Water-based solvent, Wiping solution. *Revised*: Air pollution, Distillate oil, Dry cleaning, Existing source, Fugitive dust, Incinerator, Loading facilities, Person, Start-up, Stationary source, Vapor tight, Wipe cleaning.

Unchanged from Section 8–2:702: Air Pollutant, Control Device, Conveyorized Degreaser, Cutback Asphalt, Cold Cleaner, District, Emission, Episode Stage, Fossil Fuel, Fossil-Fuel-Fired Steam-Generating Unit, Freeboard, Fuel Burning Equipment, Gasoline, Malfunction, Multiple Chamber Incinerator, Opacity, Open-top Vapor Degreaser, Organic Solvents, Particulate Matter, Photochemically Reactive Solvent, Process, Process Weight, Process Rate Per Hour, Ringelmann Smoke Chart, Smoke, Solid Waste, Standard Conditions, Submerged Fill Pipe, Volatile Organic Compounds.

Abbreviations (Section 199.2)—*Added:* CFR, EPA, ppmv *Unchanged from Section 8–2:702:* B.T.U., cal., CO, COHs, cfm, g., Hi-Vol., hr., lb., max., NO_2, No., ppm, psia, SO_2, $\mu g/m^3$, U.L.

NOTE: Section 199 of Chapter 1 lists all of the applicable definitions and abbreviations, while Sections X99.1 and X99.2 of each chapter contain a cross-reference to definitions listed in Section 199.1 and abbreviations listed in Section 199.2.

(*2*) Chapter 4—Ambient Monitoring and Emergency Procedures.

Section 400 (Air Pollution Reporting Index), subsection 400.1
Section 401 (Emergency Procedures), subsections 401.1 through 401.4, 401.2 through 401.8, 401.7 (duplicate) and 401.8 (duplicate)
Section 499 (Definitions and Abbreviations), subsections 499.1 and 499.2

(*3*) Chapter 5—Source Monitoring and Testing.

Section 500 (Source Monitoring and Testing), subsections 500.1 through 500.3
Section 501 (Monitoring Devices), subsections 501.1 through 501.3
Section 502 (Sampling, Tests, and Measurements), subsections 502.1 through 502.15 (except for subsections 502.11, 502.12, and 502.14)
Section 599 (Definitions and Abbreviations), subsections 599.1 and 599.2

(*4*) Chapter 6—Particulates.

Section 600 (Fuel-Burning Particulate Emission), subsections 600.1 through 600.7
Section 601 (Rotary Cup Burners), subsections 601.1 and 601.2
Section 602 (Incinerators), subsections 602.1 through 602.6
Section 603 (Particulate Process Emissions), subsections 603.1 through 603.3
Section 604 (Open Burning), subsections 604.1 and 604.2
Section 605 (Control of Fugitive Dust), subsections 605.1 through 605.4
Section 606 (Visible Emissions), subsections 606.1 through 606.9
Section 699 (Definitions and Abbreviations), subsections 699.1 and 699.2

(*5*) Chapter 8—Asbestos, Sulfur and Nitrogen Oxides.

Section 801 (Sulfur Content of Fuel Oils), subsection 801.1
Section 802 (Sulfur Content of Coal), subsections 802.1 and 802.2
Section 803 (Sulfur Process Emissions), subsections 803.1 through 803.4
Section 804 (Nitrogen Oxide Emissions), subsection 804.1
Section 899 (Definitions and Abbreviations), subsections 899.1 and 899.2

(*6*) Appendices.

Appendix No. 1 (Emission Limits for Nitrogen Oxide)
Appendix No. 2 [Table of Allowable Particulate Emissions from Process Sources]
Appendix No. 3 [Allowable VOC Emissions under Section 710]

(*7*) Deletion of the following SIP provisions:

Section 8–2:721 (Complaints and Investigations)
Section 8–2:730 (Independence of Sections)
Section 8–2:731 (Effective Date)

The following definitions and abbreviations:

Definitions: Act, Air quality standard of the District of Columbia, Dry cleaning operation, Freeboard ratio, Mayor, Vehicular fuel tank.

Abbreviations: (Degree), VOC, ''%''.

(ii) Additional material.

(A) Remainder of June 21, 1985 District of Columbia submittal pertaining to the provisions listed above.

(35) [Reserved]

(36) The carbon monoxide redesignation and maintenance plan for the District of Columbia submitted by the District of Columbia Department of Consumer and Regulatory Affairs on October 12, 1995, as part of the District of Columbia SIP. The emission inventory projections are included in the maintenance plan.

(i) Incorporation by reference.

(A) Letter of October 12, 1995 from the District of Columbia Department of Consumer and Regulatory Affairs requesting the redesignation and submitting the maintenance plan.

(B) Maintenance Plan for the Metropolitan Washington Carbon Monoxide Nonattainment Area adopted on September 20, 1995.

(ii) Additional material.

(A) Remainder of October 12, 1995 State submittal.

[37 FR 19814, Sept. 22, 1972]

EDITORIAL NOTE: For FEDERAL REGISTER citations affecting §52.470, see the List of CFR Sections Affected in the Finding Aids section of this volume.

§52.471 Classification of regions.

The District of Columbia plan was evaluated on the basis of the following classifications:

Air quality control region	Pollutant				
	Particulate matter	Sulfur oxides	Nitrogen dioxide	Carbon monoxide	Ozone
National Capital Interstate	I	I	III	I	I

[37 FR 10857, May 31, 1972, as amended at 39 FR 16346, May 8, 1974; 46 FR 61263, Dec. 16, 1981]

§52.472 Approval status.

(a) With the exceptions set forth in this subpart, the Administrator approves the District of Columbia's plan for the attainment and maintenance of the national standards.

(b) With respect to the transportation control strategies submitted on April 19, July 9, and July 16, 1973, the Administrator approves the measures for parking surcharge, car pool locator, vehicle inspection, express bus lanes, increased bus fleet and service, elimination of free parking by private employers, with exceptions set forth in §§52.476, 52.483, 52.486, and 52.479.

(c) With the exceptions set forth in this subpart, the Administrator approves the District of Columbia's plan for the attainment and maintenance of the national standards under section 110 of the Clean Air Act. Furthermore, the Administrator finds that the plan satisfies all requirements of Part D, Title 1, of the Clean Air Act as amended in 1977.

(d) Section 710 of title 20 of the District of Columbia Regulations is approved with the following condition: Any alternative controls or exemptions under section 710.8 approved or granted by the District of Columbia are subject to a public notice and public hearing requirements and must be submitted to EPA as SIP revisions. Such alternatives or exemptions are not effective until approved as SIP revisions by EPA.

(e) [Reserved]

(f) Disapproval of revisions to the District of Columbia State Implementation Plan, District of Columbia Municipal Regulations (DCMR) Title 20, Sections 200, 201, 202, 204 and 299, pertaining to permitting of sources, and associated definitions in Section 199 submitted on June 21, 1985 and October 22, 1993 by the Mayor of the District of Columbia (1985 submittal) and by the Administrator of the District of Columbia Environmental Regulation Administration (1993 submittal). The disapproved regulations include those applicable to major new and major modified sources wishing to locate in the District. A new source review program for such major sources is required under sections 182 and 184 of the Clean Air Act. There are many deficiencies in the DCMR permitting regulations. Some of these deficiencies are the lack of public notice and comment procedures for new and modified sources applying for construction permits, the existence of a provision that allows the Mayor to grant indefinite 1-month temporary permits to those sources whose permits he/she determines have been delayed because of his/her office, the inclusion of a major source operating permit program, the inclusion of a minor source operating permit program that does not meet Part D requirements of the Act, the exemption of certain fuel burning (nitrogen oxide emitting) sources, incorrect citations of the Clean Air Act, a provision that allows circumvention of the offset requirement, and the lack of the de minimis special modification provisions required in serious and severe ozone nonattainment areas (section 182(c)(6) of the Clean Air Act).

[38 FR 33709, Dec. 6, 1973, as amended at 46 FR 61263, Dec. 16, 1981; 57 FR 34251, Aug. 4, 1992; 60 FR 5136, Jan. 26 1995; 60 FR 15486, Mar. 24, 1995; 61 FR 2936, Jan. 30, 1996]

§ 52.473 [Reserved]

§ 52.474 1990 Base Year Emission Inventory for Carbon Monoxide

EPA approves as a revision to the District of Columbia Implementation Plan the 1990 base year emission inventory for the Washington Metropolitan Statistical Area, submitted by Director, District of Columbia Consumer and Regulatory Affairs, on January 13, 1994 and October 12, 1995. This submittal consist of the 1990 base year stationary, area and off-road mobile and on-road mobile emission inventories in the Washington Statistical Area for the pollutant, carbon monoxide (CO).

[61 FR 2936, Jan. 30, 1996]

§§ 52.475—52.478 [Reserved]

§ 52.479 Source surveillance.

(a) [Reserved]

(b) The requirements of § 51.213 are not met with respect to the strategies for carpool locator service. The remaining transportation measures in the previously federally-promulgated implementation plan have been mooted by court decision (*District of Columbia* v. *Costle*, 567 F. 2d 1091 (D.C. Cir 1977)) or rescinded by EPA.

[46 FR 61263, Dec. 16, 1981, as amended at 51 FR 40677, Nov. 7, 1986]

§ 52.480 Photochemical Assessment Monitoring Stations (PAMS) Program.

On January 14, 1994 the District of Columbia's Department of Consumer and Regulatory Affairs submitted a plan for the establishment and implementation of a Photochemical Assessment Monitoring Stations (PAMS) Program as a state implementation plan (SIP) revision, as required by section 182(c)(1) of the Clean Air Act. EPA approved the Photochemical Assessment Monitoring Stations (PAMS) Program on September 11, 1995 and made it part of the District of Columbia SIP. As with all components of the SIP, the District of Columbia must implement the program as submitted and approved by EPA.

[60 FR 47084, Sept. 11, 1995]

§§ 52.481—52.497 [Reserved]

§ 52.498 Requirements for state implementation plan revisions relating to new motor vehicles.

The District of Columbia must comply with the requirements of § 51.120.

[60 FR 4737, Jan. 24, 1995]

§52.499 Significant deterioration of air quality.

(a) The requirements of sections 160 through 165 of the Clean Air Act are not met, since the plan does not include approvable procedures for preventing the significant deterioration of air quality.

(b) Regulations for preventing significant deterioration of air quality. The provisions of §52.21 (b) through (w) are hereby incorporated and made a part of the applicable state plan for the District of Columbia.

[43 FR 26410, June 19, 1978, as amended at 45 FR 52741, Aug. 7, 1980]

§52.510 Small business assistance program.

On October 22, 1993, the Administrator of the District of Columbia Environmental Regulation Administration submitted a plan for the establishment and implementation of a Small Business Technical and Environmental Compliance Assistance Program as a state implementation plan revision (SIP), as required by title V of the Clean Air Act. EPA approved the Small Business Technical and Environmental Compliance Assistance Program on August 17, 1994 and made it part of the District of Columbia SIP. As with all components of the SIP, the District of Columbia must implement the program as submitted and approved by EPA.

[59 FR 42168, Aug. 17, 1994]

Subpart K—Florida

§52.520 Identification of plan.

(a) Title of plan: ''State of Florida Air Implementation Plan.''

(b) The plan was officially submitted on January 27, 1972.

(c) The plan revisions listed below were submitted on the dates specified.

(1) Notification of adoption of standard procedures to test and evaluate air pollution sources submitted on April 10, 1972, by the Florida Department of Pollution Control.

(2) Miscellaneous non-regulatory additions to the plan submitted on May 5, 1972, by the Florida Department of Pollution Control.

(3) Compliance schedules submitted on June 1, 1973, by the Florida Department of Pollution Control.

(4) Compliance schedules submitted on August 6, 1973, by the Florida Department of Pollution Control.

(5) Revision of the State permit system to include indirect sources, Section III, Chapter 17–2, submitted on September 25, 1973, by the Florida Department of Pollution Control.

(6) Compliance schedules submitted on February 26, 1974, by the Florida Department of Pollution Control.

(7) Identification of ten AQMA's submitted on May 30, 1974, by the Florida Department of Pollution Control.

(8) Request that EPA defer identification of seven AQCR's submitted on September 25, 1974, by the Florida Department of Pollution Control.

(9) Additional information relating to the September 25, 1974, deferral request submitted on November 21, 1974, by the Florida Department of Pollution Control.

(10) Additional information relating to the September 25, 1974, deferral request submitted on January 9, 1975, by the Florida Department of Pollution Control.

(11) Revision to SO_2 emission limits for sulfur recovery plants and sulfuric acid plants submitted on February 12, 1975, by the Florida Department of Pollution Control.

(12) Request for deletion of four AQMA's from the AQMA identification list submitted on March 31, 1975, by the Florida Department of Pollution Control.

(13) Additional information supporting the March 31, 1975, deletion request submitted on April 9, 1975, by the Florida Department of Pollution Control.

(14) Additional information supporting the March 31, 1975, deletion request submitted on April 15, 1975, by the Florida Department of Pollution Control.

(15) Revised limits on sulfur dioxide emissions from fossil-fuel-fired steam generators were submitted on July 26, 1975, by the Department of Environmental Regulation. (No action is taken on these new limits as they apply to Duval County.)

(16) Revised ambient sulfur dioxide standards for Broward, Dade, and Palm

Beach Counties, submitted on December 15, 1975, by the Florida Department of Environmental Regulation.

(17) Revised burning rule for cold or frost protection, submitted on January 14, 1976, by the Florida Department of Environmental Regulation.

(18) 1979 implementation plan revisions for nonattainment areas, (sulfur dioxide and ozone), submitted on April 30, 1979, as supplemented with August 27, 1979 and January 23, 1980 submittals by the Florida Department of Environmental Regulation.

(19) Variance from particulate, sulfur dioxide, and visible emission limits of the plan for units of Florida Power and Light Company's Cape Canaveral, Ft. Myers, Manatee, Riviera, and Sanford plants, submitted on August 31, 1979, and June 23, 1980, by the Florida Department of Environmental Regulation. (The particulate variance for the Port Everglades and Turkey Point plants is disapproved.)

(20) Limited variance from particulate, visible, and excess emissions limits granted to Florida Power and Light for Unit 4 of its Sanford station, submitted on February 4, 1980, by the Department of Environmental Regulation.

(21) The implementation plan revision developed by the Florida DER for the Jacksonville and Tampa TSP secondary nonattainment areas under Part D of Title I of the CAA was submitted for EPA's approval on February 27, 1981. The control strategies, as approved and adopted for the local program agencies (the Duval County Bio-Environmental Services Division and the Hillsborough County Environmental Protection Commission) were submitted to EPA on March 16 and April 20, 1982, respectively.

(22) Pursuant to section 127 of the Clean Air Act, the Florida Department of Environmental Regulation submitted on April 15, 1980 a revision to the SIP concerning provisions for public notification and awareness.

(23) The air quality surveillance plan revision was submitted by the Florida Department of Environmental Regulation on December 11, 1979 and updates Florida's SIP to meet EPA requirements as set forth in 40 CFR part 58 (44 FR 27558, May 10, 1979).

(24) Reformatting of the Rules and Regulations portion of the Florida State Implementation Plan, submitted on May 8, 1978, by the Florida Department of Environmental Regulation.

(25) Revisions to the Sulfur Dioxide Emission Limiting Regulations applicable to specific Fossil Fuel Steam Generators, submitted on November 6, 1978, and February 3, 1979, by the Florida Department of Environmental Regulation.

(26) Request for delegation of authority for PSD submitted on September 22, 1980, by the Department of Environmental Regulation.

(27) Corrections in 1979 revisions for ozone nonattainment areas (Broward, Dade, Duval, Hillsborough, Orange, Palm Beach, and Pinellas Counties) submitted on May 28, 1980, by the Florida Department of Environmental Regulation to meet conditions of the conditional approval of March 18, 1980 (45 FR 17140).

(28) Revised limits on visible emissions from new sulfuric and nitric acid plants and mass particulate emission limits new Portland cement plants, submitted on July 16, 1976, by the Department of Environmental Regulation.

(29) Revised Opacity Limits for Monsanto Textile Co., Pensacola, Florida, submitted on December 19, 1979, by the Florida Department of Environmental Regulation.

(30) Operating permit for Stauffer Chemical Company, submitted on August 4, 1980, by the Florida Department of Environmental Regulation, to satisfy a condition of the approval of the 1979 revisions for the Pinellas County SO_2 nonattainment area.

(31) Revised ambient CO and TSP standards applicable in Broward, Dade, and Palm Beach Counties, submitted on August 6, 1976, by the Florida Department of Environmental Regulation.

(32) Set II VOC regulations, submitted on August 28, 1980, by the Florida Department of Environmental Regulation.

(33) Amendments to Florida's continuous monitoring rule, submitted on January 27, 1978, by the Department of Environmental Regulation.

(34) Revisions in Sections 17–2.21 and 17–2.32 of the Florida Administrative Code, adopting, in part, Federal NSPS and NESHAPS regulations, submitted by the Florida Department of Environmental Regulation on August 28, 1980.

(35) Revision of gasoline bulk plant rule, submitted on October 15, 1980, by the Florida Department of Environmental Regulation.

(36) Variance granted to Florida Power and Light Company for Unit 4 of its Sanford station, submitted on August 11, 1981, by the Department of Environmental Regulation. This variance is applicable until July 1, 1984, or until thirty months after EPAapproval, whichever, is later, for particulate, visible, and sulfur dioxide emissions.

(37) RACT emission limits and bubble provision for General Portland Inc., Tampa (FAC 17–2.650(2)(c)1.c.), submitted by the Florida Department of Environmental Regulation on August 11, 1981.

(38) Revocation of complex source rules, submitted on August 11, 1981, by the Florida Department of Environmental Regulation.

(39) Emission limits for sources burning carbonaceous fuel, submitted on May 22, 1974, and January 21, 1981, and reformatted on August 11, 1981, by the Florida Department of Environmental Regulation.

(40) Amendments to upset, startup and malfunction rule, submitted on August 12, 1976; revisions to section 17–2.05(14) FAC (excess emissions) and 17–2.05(6) Table II, E., FAC, fossil fuel steam generators-visible emissions, submitted on October 19, 1979; revision describing compliance testing for amendments in section 17–2.05 (14) and (6), submitted on September 24, 1980, by the Department of Environmental Regulation.

(41) Reformatting of the rules and regulations portion of the Florida State Implementation Plan, submitted on August 11, 1981, by the Florida Department of Environmental Regulation.

(42) Revised open burning and frost protection rule and ambient lead standard, submitted on December 23, 1981, by the Florida Department of Environmental Regulation.

(43) On July 14, 1980, the Florida Department of Environmental Regulation (FDER) submitted a revision pertaining to deletion of the regulation on existing petroleum refineries in nonattainment areas and adding test methods for gasoline truck tanks, vapor collection systems, volatile organic compound (VOC) content of coating materials and gasoline bulk terminals for sources located in ozone nonattainment areas. On May 30, 1980, FDER submitted a revision establishing incremental compliance dates for existing VOC sources and extending final compliance dates for certain gasoline service stations. On December 23, 1981, FDER submitted a revision establishing test methods for certain VOC sources, adopting three definitions used in the test methods, and exempting six VOCs.

(44) Revised SO_2 limits for the Gannon Station of Tampa Electric Company, submitted on December 3, 1980, and associated methods of coal sampling and analysis, submitted on February 16, 1982, by the Florida Department of Environmental Regulation.

(45) Revision of the commencement date of the COM test burn period for Florida Power and Light Co.'s Sanford Plant, Unit 4, submitted on March 30, 1982, by the Florida Department of Environmental Regulation.

(46) Miscellaneous regulation changes, submitted on August 11, 1981, by the Florida Department of Environmental Regulation.

(47) Point source emission testing methods submitted on December 30, 1980, and May 29, 1981, by the Florida Department of Environmental Regulation.

(48) Revised ambient standards and episode alert level for ozone, submitted on April 26, 1982, by the Florida Department of Environmental Regulation.

(49) Changes in Open Burning and Frost Protection Fire Rule, submitted on November 15, 1982, by the Florida Department of Environmental Regulation.

(50) Miscellaneous amendents to Chapter 17–2, submitted on December 23, 1982, by the Florida Department of Environmental Regulation.

(51) Regulations for Prevention of Significant Deterioration, submitted

on December 23, 1981, and December 23, 1982, by the Florida Department of Environmental Regulation. (No action is taken on the provisions for review involving vessel emissions or nonattainment areas.)

(52) Amendments to Chapter 17–2.650(1)(a) and 17–2.650(2)(a) submitted on February 18, 1983, by the Florida Department of Environmental Regulation. The amendments require all new and modified sources of particulate and volatile organic compounds located in nonattainment areas or in areas of influence for particulate matter to utilize Reasonably Available Control Technology (RACT) if they are not subject to Lowest Achievable Emissions Rate (LAER) provisions.

(53) Changes to Florida Administrative Code (FAC), Chapter 17–2, submitted on August 12, 1983, and June 13, 1984, by the Florida Department of Environmental Regulation (FDER).

(i) Incorporation by reference—

(A) August 12, 1983, letter and April 17, 1984, certification of Administrative Rules filed with the Department of State, from the Florida Department of Environmental Regulation.

(B) Amendments to Florida Administrative Code Rules 17–2.100(132), 17–2.300 (1) and (2), 17–2.400 (1) through (5), 17–2.500(2)(e)3, 17–2.500(2)(e)4.c.(i), 17–2.500(4)(b), 17–2.650(1)(a). These revisions were adopted on July 1, 1983, by the State of Florida Department of Environmental Regulation.

(C) Amendments to Florida Administrative Code Rules 17–2.410 (1) and (3), and 17–2.460, approved on April 17, 1984, by the State of Florida Department of Environmental Regulation.

(ii) Additional material—none.

(54) TSP variance for Jacksonville Kraft Paper Company, submitted on September 2, 1983, by the Florida Department of Environmental Regulation.

(55) State implementation plan for lead, submitted by the Department of Environmental Regulation on September 17, 1984.

(i) Incorporation by reference—

(A) Amendments to Florida Administrative Code, Chapter 17.2–100, Definitions, and 17.2–500 and 510, Applicability (for New Source Review), adopted by the State on January 25, 1984, and September 17, 1984 letter from the Florida Department of Environmental Regulation to EPA.

(ii) Additional material—

(A) Narrative submittal, including an attainment demonstration.

(B) Emissions inventories for lead sources.

(56) Amendments to the Florida Administrative Code (FAC) submitted by the Secretary of the Florida Department of Environmental Regulation (FDER) on May 30, 1985, which deals with source sampling.

(i) Incorporation by reference.

(A) Amendments to 17–2.700 FAC, which deals with source sampling procedures and conditions, adopted on April 3, 1985, by the FDER.

(ii) Additional material.

(A) None.

(57) Changes to Florida Administrative Code (FAC) Chapter 17–2, submitted on May 31, 1985, by the Florida Department of Environmental Regulation (FDER).

(i) Incorporation by reference.

(A) May 31, 1985 letter from the Florida DER, and Amendments to FAC Chapters 17–2.100, 17–2.215, 17–2.540, 17–2.600, 17–2.700 and 17–2.753 which were adopted by the FDER on April 11, 1985. Allow sulfur in the pelletized form to be shipped and handled in the State. Also establish new source review requirements, emission estimating procedures, emission limiting standards, and test procedures for elemental sulfur storage and handling facilities.

(ii) Additional information.

(A) None.

(58) Visibility new source review regulations were submitted to EPA on September 23, 1985.

(i) Incorporation by reference.

(A) Letter of September 23, 1985, from the State of Florida Department of Environmental Regulation, and amendments to Rule 17–2.100 FAC (Definitions), Rule 17–2.220 FAC (Public Notice and Comment), and Rule 17–2.500 FAC (Prevention of Significant Deterioration), adopted by the Florida Department of Environmental Regulation on July 25, 1985.

(59) Post-1982 CO SIP revision for Dade County, submitted on September 19, 1986, by the Florida Department of Environmental Regulation.

(i) Incorporation by reference—none.

(ii) Other material.

(A) Narrative description of analysis performed for CO.

(B) Analysis of East Flagler Street Carbon Monoxide Exceedances—Downtown Miami.

(C) Description of Methodologies to Assess Eight-Hour Nighttime Carbon Monoxide Exceedances.

(D) Identification and Analysis of Potential Carbon Monoxide Hotspots in Dade County, Florida.

(E) Analysis of Transportation Control Measures (TCMs), Dade County/Miami.

(60) Stack height regulations were submitted on July 1 and November 19, 1986, by the Florida Department of Environmental Regulation.

(i) Incorporation by reference.

(A) Revised FAC 17–2.100(177), added FAC 17–2.100(178), added FAC 17–2.500(5)(h)6., and added FAC 17–2.510(4)(f), adopted on May 8, 1986.

(B) Revised FAC 17–2.100(61) and revised FAC 17–2.270, adopted on September 30, 1986.

(ii) Other material—none.

(61) [Reserved]

(62) Consent Order was submitted by EPA on August 14, 1986, by the Florida Department of Environmental Regulation.

(i) Incorporation by reference.

(A) A Consent Order for Smart-Pak Industries was adopted by the Florida Department of Environmental Regulation on June 17, 1986.

(ii) Additional material—none.

(63) Florida plan for the protection of visibility in Federal Class I areas submitted to EPA on August 27, 1987, by the Florida Department of Environmental Regulation (FDER) to satisfy the Part 2 visibility requirements.

(i) Incorporation by reference.

(A) May 26, 1988, letter from the Florida Department of Environmental Regulation, and pages 20 and 21 of the Florida plan for the protection of visibility in Federal Class I areas containing the periodic review requirements satisfying 40 CFR 51.306(c), adopted by the Florida Department of Environmental Regulation on August 27, 1987.

(ii) Additional material.

(A) Narrative SIP titled ''The Florida Plan for the Protection of Visibility in Federal Class I Areas.''

(64) [Reserved]

(65) Changes to the Florida Administrative Code (FAC), Chapter 17–2, submitted to EPA on November 19, 1986, and June 12, 1987, by the Florida Department of Environmental Regulations.

(i) Incorporation by reference.

(A) November 19, 1986, and June 12, 1987, letters from the Florida Department of Environmental Regulation.

(B) Amendments to Florida Administrative Code Rules 17–2.100(6), (21) and (118); 17–2.210 introductory text, (1) and (3)(r); 17–2.220(1), (2)(a)–(h); 17–2.300(3)(c)1. and (3)(c)2.; 17–2.310 introductory text; 17–2.450(1)(a) and (2)(a);17–2.500(2)(e)4.a. (i) and (ii), (4)(a)1.a. and (4)(b)1.; 17–2.600(1)(d); and 17–2.700(2)(a)3.; Tables 500–1, 500–2, 500–3, Table 700–1 and Table 700–2. These revisions were adopted on July 1, 1983, and September 30, 1986, by the FloridaDepartment of Environmental Regulation.

(ii) Additional material—none.

(66) PM_{10} revisions for the Florida State Implementation FPlan were submitted on May 19, 1988 and July 18, 1989, by the Florida Department of Environmental Regulation. Miscellaneous corrective revisions were also submitted by the Florida Department of Environmental Regulation on July 18, 1989.

(i) Incorporation by reference.

(A) Revised regulations which became state-effective on May 30, 1988:

17–2.100—Definitions: (16)(a), (17), (61), (143), (173)(b), (202)

17–2.300—Ambient Air Quality Standards: (3)(b)

17–2.310—Maximum Allowable Increases (Prevention of Significant Deterioration Increments): (1)(a) and (2)(a)

17–2.330—Air Alert: (1)(b) thru (f)

17–2.340—Air Warning: (1)(b)

17–2.350—Air Emergency: (1) Introductory paragraph, (1)(b) thru (e)

17–2.400—Procedures for Designation and Redesignation of Areas: (1)(b)

17–2.410—Designation of Areas Not Meeting Ambient Air Quality Standards (Nonattainment Areas): (2)(b), (3) thru (7)

17–2.420—Designation of Areas Meeting Ambient Air Quality Standards (Attainment Areas): (2)

17–2.430—Designation of Areas Which Cannot Be Classified As Attainment or Nonattainment (Unclassifiable Areas): (1)

17–2.450—Designation of Prevention of Significant Deterioration (PSD) Areas: (1) Introductory paragraph and subparagraph (a)

17–2.460—Designation of Air Quality Maintenance Areas: (4)

17–2.500—Prevention of Significant Deterioration: (2)(e)4.b., (4)(e)3., (5)(f)3, Table 500–2 and Table 500–3

17–2.600—Specific Source Emission Limiting Standards: (11)(a)3., 7., 9., (11)(b)3.a., (11)(b)5.

(B) Revised regulations which became state-effective on July 9, 1989:

17–2.100—Definitions: (37) and (145)

17–2.210—Permits Required: (1) and (3)

17–2.260—Air Quality Models

17–2.300—Ambient Air Quality Standards: (2)

17–2.340—Air Warning: (1)(c)

17–2.410—Designation of Areas Not Meeting Ambient Air Quality Standards (Nonattainment Areas): (1) and (2)(a)

17–2.420—Designation of Areas Meeting Ambient Air Quality Standards (Attainment Areas): (3) thru (5)

17–2.430—Designation of Areas Which Cannot Be Classified As Attainment or Nonattainment (Unclassifiable Areas): (2) Introductory Paragraph

17–2.460—Designation of Air Quality Maintenance Areas: (1) and (2)

17–2.500—Prevention of Significant Deterioration: (1)(a)—(c)

17–2.520—Sources Not Subject to Prevention of Significant Deterioration or Nonattainment Requirements.: Title

17–2.540—Source Specific New Source Review Requirements: (2)(a)

17–2.600—Specific Emission Limiting and Performance Standards: Title, Introductory paragraph, (1)(a)1., (2)(a)2.a.; (2)(b)1.; (4)(b)2.; (5)(a)1., 2., 3a.(i), and 4. Introductory paragraph; (5)(b); (6); (12)(a)1.; (12)(a)7.; (12)(b); (12)(c) Introductory paragraph; (12)(c)4., (13); and (14)

17–2.610—General Particulate Emission Limiting Standards: Table 610–1 and (3)(c)7.

17–2.650—Reasonably Available Control Technology (RACT): (1)(c)3.a.(ii) and (iii); (1)(f) introductory paragraph; (1)(f)10.c.(i) and (iv); (2)(a)1., (b), (c) Introductory paragraph, (c)1.b. and c., (c)2.b.(ii), (c)3.b.(ii), (c)4.b, (c)5.a. Introductory paragraph, (c)5.a.iv. and v., (c)5.b.(i)–(iv), (c)6.b.(i) and (iii), (c)7.b.(i) and (ii), (c)8. thru 10., (c)11.a. Introductory paragraph, (c)11.a.(vi), (c)11.b., and (c)12.; (2)(d)2.a., b. and c.

17–2.660—Standard of Performances for New Stationary Sources (NSPS): (2)(b)

17–2.700—Stationary Point Source Emissions Test Procedures: (1)(b) Introductory paragraph; (1)(d)1.b.(i), (2)(a)2., (2)(a)4. thru 9.; Table 700–1; (4)(c)1.c.(i) and (ii); (6)(a)1.a., (b)1., (b)2.a. and b., (b)3.a. and b., (b)5., (b)6.a. thru c.,(b)7.b. thru e., (b)10., (b)(12), (b)16.b. and c., (b)18 thru 22, (b)24. thru 31., and (c)6.d.

17–2.710—Continuous Monitoring Requirements: (1)(a)2.

17–2.960—Compliance Schedules for Specific Source Emission Limiting Standards: (1)(c) and (d) Introductory paragraph; (1)(e).

(ii) Additional material.

(A) Letter of May 19, 1988, from the Florida Department of Environmental Regulation (FDER) submitting the SIP revisions.

(B) Letter of July 18, 1989, from the FDER submitting additional SIP revisions.

(67) [Reserved]

(68) Revisions which were submitted on August 16 and November 8, 1989, concerning Biological Waste Incinerators

(i) Incorporation by reference. (A) Revisions to Florida Administrative Code, Chapter 17–2 which became state effective on August 30, 1989.

17–2.100 Definitions; 27, 28, 181, and 182

17.2.600 Specific Source Emission Limiting Standards: (1)(a)1., (1)(b) Introductory paragraph, (1)(c) Introductory paragraph, (1)(d)

17.2.700 Stationary Point Source Emissions Test Procedures:

Table 700–1: 17–2.600(1)(a)–(e)

17.2.710 Continuous Monitoring Requirements: paragraph (5)

(B) Revisions to Florida Administrative Code, chapter 17–2 which became state effective on November 9, 1989.

17–2.100 Definitions: 26 and 175

(ii) Additional material. (A) Letter of August 16, 1989, from the Florida Department of Environmental Regulation submitting the SIP revision.

(B) Letter of November 8, 1989, from the Florida Department of Environmental Regulation submitting the amendments to the August 16, 1989, submittal.

(69) Vehicle Anti-tampering and visible emissions regulations (Chapter 17–243 and Chapter 17–244 of the Florida Administrative Code respectively) which were submitted to EPA on March 20, 1990, and revisions to Chapter 17–243 submitted on June 18, 1990.

(i) *Incorporation by reference.*

(A) New Florida Administrative Code (FAC) regulations 17–243 (Tampering with Motor Vehicle Pollution Control

Equipment) and 17–244 (Visible Emissions from Motor Vehicles) which became state effective on February 21, 1990.

(B) Revisions to FAC Chapter 17–243 (Tampering with Motor Vehicle Air Pollution Control Equipment) which became state effective May 29, 1990.

(ii) *Other material.*

(A) March 20, 1990, and June 18, 1990, letters from the Florida Department of Environmental Regulation.

(70) Revisions to chaper 17–2 of the Florida Administrative Code which were submitted on July 12, 1990.

(i) Incorporation by reference.

(A) Amendments to the following rules of F.A.C. which become effective on July 13, 1990:

17–2.100 (21), (22), (119) and (126);
17–2.310 (preamble), (1)(c), (2)(c), and (3)(c);
17–2.450 (1)(a), (2)(a), and (3); and
17–2.500 (2)(e)4.b., (3)(f)3., 4(a)3., 4(b)1. thru 3.a.
introductory paragraph, 4(b)3.b. thru d., 4(b)3.e. introductory paragraph and 4(b)3.e.(ii).

(ii) Other material.

(A) Letter of July 12, 1990, from the Florida Department of Environmental Regulation.

(B) Minimum program elements.

(71) The Florida Department of Environmental Regulation submitted an Order authorizing research and testing by the Florida Power & Light Company and the operating permit for the Orimulsion Fuel Test Burn at the Sanford Power Plant Unit No. 4 to EPA on October 11, 1990.

(i) *Incorporation by reference.* (A) Florida Department of Environmental Regulation Order authorizing research and testing by the Florida Power & Light Company adopted on October 4, 1990.

(B) Florida Power & Light operating permit number AC 64–180842, PSD–FL–150 which becomes State-effective on January 7, 1991.

(ii) *Other materials.* (A) Letter of October 11, 1990, from the Florida Department of Environmental Regulation.

(72) Revisions to Chapter 17–2 of the Florida Administrative Code which were submitted on August 16, 1989, and August 27, 1990.

(i) Incorporation by reference.

(A) Amendments to FAC 17–2.100(41), (153) and (217); 17–2.510(2)(a) introductory paragraph, 17–2.650(1)(a), (1)(b) title, (1)(b)2., (1)(c)1, (1)(d), (1)(e), (1)(f) introductory paragraph, (1)(f)2.a., (1)(f)3.a., (1)(f)5.b., (1)(f)6.a.(i), and (1)(f)14.a.(iii); which became State effective on August 30, 1989.

(B) Amendments to FAC 17–2.100(220); 17–2.650(1)(b)2, (1)(d), (1)(e), (1)(f)4.a., and (1)(f)16.a.; 17–2.700 TABLE 700–1; and 17–2.965, which became State effective on September 13, 1990.

(ii) Other material—None.

(73) Regulations for a centralized vehicle Inspection/Maintenance (I/M) program. These revisions were submitted by the State of Florida, through the Florida Department of Environmental Regulation (FDER) on March 20, 1989.

(i) Incorporated by reference.

(A) Florida Administrative Code, Chapter 17–242, Mobile Source—Vehicle Emission Standards and Test Procedures Rule which were adopted on January 31, 1989.

(ii) Other material.

(A) Letter of March 20, 1989, from the Florida Department of Regulation (FDER).

(74) Vehicle Anti-tampering revisions (Chapter 17–243 of the Florida Administrative Code) which were submitted to EPA on January 24, 1991.

(i) *Incorporation by reference.*

(A) Revisions to FAC Chapter 17–243 (Tampering with Motor Vehicle Air Pollution Control Equipment) which became state effective January 2, 1991, as follows:

17–243.200—Definitions: (1); (2) Introductory Paragraph and (a); and (3) Introductory paragraph
17–243.300—Exemptions: (2); (3) Introductory paragraph and (b); (4) Introductory paragraph, (b), (c) and (d)
17–243.400—Prohibitions
17–243.500—Certification: (1)(a) thru (d)
17–243.600—Enforcement: (2); (3) Introductory paragraph and (b), (4); (6); and (7)

(ii) *Other material.*

(A) Letter dated January 24, 1991, from the Florida Department of Environmental Regulation.

(75) Revisions to F.A.C. Chapter 17–242 (Motor Vehicle Emission Standards and Testing Procedures) which were submitted to EPA on March 25, 1991.

(i) Incorporation by reference.

(A) Revision to F.A.C. 17–242 (Motor Vehicle Emission Standards and Testing Procedures) which were adopted March 1, 1991.

Revision to F.A.C. Chapter 17–242 as follows:

17–242.100; and
17–242.200 (1), (6), (9), (11), (12), (15), (18), (26), (29) and (30); and
17–242.300; and
17–242.400; and
17–242.500; and
17–242.600 (1–3(a)(3)), 3(a)(6–10), 5(a–f), 5(h), 6 and
17–242.700; and
17–242.800; and
17–242.900 (1), (2)(a), (2)(b), (2)(d) through (2)(g), (3), (4) and (5)

(ii) Other material.

(A) Letter of March 25, 1991, from the Florida Department of Environmental Regulation.

(76) The Florida Department of Environmental Regulation submitted revisions to chapter 17–2 of the Florida Administrative Code which were submitted on January 14, 1992. These revisions incorporate Capture Efficiency Test Procedures for Volatile Organic Compound sources into the Florida Administrative Code.

(i) Incorporation by reference.

(A) Florida Administrative Code (FAC) 17–2.100 (32), (37), (38), (39), (40), (60), (61), (68), (95), (101), (117), (155), (163), (180), (218), (237), effective December 31, 1991.

(B) FAC 17–2.650(1)(f) Introductory paragraph, 1., 2., 3., 4., 5., 6., 7., 12., 14., 15., and 16., effective December 31, 1991.

(C) FAC 17–2.700(6)(c)7, effective December 31, 1991.

(D) FAC 17–2.700(7), effective December 31, 1991.

(ii) Other material—None.

(77) [Reserved]

(78) State Implementation Plan for chapters 17–296, and 17–297, Soil Thermal Treatment and Recodification of the Florida Administrative Code, chapter 17–2, Air Pollution, submitted by the Department of Environmental Regulation on November 23, 1992, and January 11, 1993, respectively.

(i) Incorporation by reference.

(A) The following chapters of the Florida Administrative Code, effective October 15, 1992:

(*1*) 17–209, Local Air Pollution Programs,

(*2*) 17–210, Stationary Sources General Requirements,

(*3*) 17–212, Preconstruction Review,

(*4*) 17–252, Gasoline Vapor Control,

(*5*) 17–272, Ambient Air Quality Standards,

(*6*) 17–273, Air Pollution Episodes,

(*7*) 17–275, Air Quality Areas,

(*8*) 17–296, Stationary Sources—Emission Standards,

(*9*) 17–297, Stationary Sources—Emission Monitoring.

(B) Revisions to the following Florida Administrative Code: Chapters 17–296.200(162), 17–296.415, table 297.330–1: entry 17–296.415, 17–297.500(6), Soil Thermal Treatment, effective November 17, 1992.

(ii) Other material. None.

(79) Revisions to the F.A.C. Chapter 17–252 which were submitted by the Florida Department of Environmental Protection on January 8, 1993. The submittal revised the regulations for vapor recovery.

(i) Incorporation by reference.

(A) Revision to F.A.C. 17–252 which was effective on February 2, 1993: 17–252.100; 17–252.200(2–12); 17–252.300; 17–252.400; 17–252.500; 17–252.800; 17–252.900

(ii) Other material.

(A) Letter of January 8, 1993, from the Florida Department of Environmental Regulation.

(80) The Florida Department of Environmental Regulation has submitted revisions to chapter 403.0852 of the Florida Statutes on February 24, 1993. These revisions address the requirements of section 507 of title V of the CAA and establish the Small Business Stationary Source Technical and Environmental Assistance Program (PROGRAM).

(i) Incorporation by reference. Florida Statutes 403.031(20), 403.0852 (1), (2), (3), (4), 403.0872(10)(b), 403.0873, 403.8051, effective on April 28, 1992.

(ii) Other material. None.

(81) The maintenance plan for Duval County submitted by the Florida Department of Environmental Protection on June 23, 1993, as part of the Florida SIP.

(i) Incorporation by reference.

(A) Duval County Ozone Ten Year Maintenance Plan including Emissions Inventory Summary and Projections effective on August 23, 1994.

(ii) Other material. None.

(82) Revisions to chapter 17–296 and 17–297 of the Florida Administrative Code (FAC) regarding animal crematories and human crematories submitted on October 8, 1992, and December 9, 1993, respectively.

(i) Incorporation by reference.

(A) Amendments to FAC 17–2.600(d) and 17–2.700 and Table 700–1, adopted September 24, 1992.

(B) Amendments to FAC 17–296.200(84), 17–296.401(5), 17–297.330, Table 17–297.330–1 and 17–297.500(7), adopted November 12, 1992.

(ii) Additional information. None.

(83) Revisions to Chapter 17–296 of the Florida Administrative Code (FAC) regarding Stationary Sources submitted on July 2, 1993.

(i) Incorporation by reference.

(A) Amendments to FAC 17–296.405 and 17–296.406, adopted June 9, 1993.

(84) Revisions to Florida Administrative Code Chapters 1709242 and 1709275 which were effective February 2, 1993.

(i) Incorporation by reference.

(A) Revisions to Florida Administrative Code 1709242 and 1709275 which were effective February 2, 1993.17.242.200(2), (16), (22), (250926), (29), (31); 17.242.400(2093), (4)(a), (4)(b), (5) introductory text and (5)(a);1709242.500(1)(a-b), (3)(b)1.; 1709242.600(2), (3) introductory text, (3)(a)1., (3)(a)7., (3)(c), (5)(d); 1709242.700 (4) introductory text, (4)(a), (4)(c-d), (5); 1709242.800(1), 1709242.900(1)(b), (2), (3)(c), (4); 1709275.100; 1709275.200 introductory text, (15), (170918); 275.300(1)(c), (3) introductory text,(3)(a), (3)(b)introductory text, (3) introductory text, (3)(b) introductory text, (3)(b)2. introductory text, (3)(b)2.b.-c., (3)(b)3. introductory text, (3)(b)3.a.; 17.275.400(2095); 1709275.410(1093),(6); 1709275.420(1);1709275.600(1),(2) introductory text, (2)(b-c)

(ii) Other material. None.

(85) Revisions to the State of Florida State Implementation Plan (SIP) concerning emission statements were submitted on January 12, 1993 by the Florida Department of Environmental Protection.

(i) Incorporation by reference.

(A) Revisions to the following Florida Regulations were effective February 9, 1993. F.A.C. 17–210.100; 17–210.200(47), (49), (52) and (64); 17–210.370; and 17–210.900.

(ii) Other material. None.

(86) The maintenance plan for Southeast Florida submitted by the Florida Department of Environmental Protection on November 8, 1993, as part of the Florida SIP.

(i) Incorporation by reference.

(A) Southeast Florida Ozone Ten Year Maintenance Plan including Emissions Inventory Summary and Projections effective on November 8, 1993.

(ii) Other material. None.

(87) Revisions to chapter 17–256 of the Florida Administrative Code (FAC) regarding Open Burning submitted on July 9, 1991.

(i) Incorporation by reference. Amendments to FAC 17–256.450, effective June 27, 1991.

(ii) Other material. None.

(88) Revisions to the F.A.C. Chapters 17–212 and 17–296 which were effective February 2, 1993

(i) Incorporation by reference.

(A) Revision to F.A.C. 17–212, and 17–296 which were effective on : February 2, 1993. 17–212.100; 17–212.200 introductory paragraph, (5),(12),(57),(63)(e),(64),(75); 17–212.400 introductory paragraph,(2) introductory paragraph, (2)(f)3; 17–212.500(2)(a), (2)(a) introductory paragrpah, 2(a)2. introductory paragraph, 2(a)2.a., (2)(a)2.e.4.,(4)(b), (4)(c),(4)(d)1., (4)(d)2.a.–c., (4)(g), (5)(a), (5)(b)2.,4.–7.. 9.;17–296.200(13), (50), (198); 17.500 introductory paragraph,(1); 17–296.570(3).

(B) Revision to F.A.C. 17–296 which became effective on April 17, 1994. 17–296.500(1)(b), (2)(a)(1), (2)(b)(1), (2)(c), (6); 17–296.570(1–2), (4).

(ii) Other material.

(A) Letters of January 8, 1993 and April 25, 1994, from the Florida Department of Environmental Protection.

(89) The maintenance plan for Tampa, Florida, submitted by the Florida Department of Environmental Protection on February 7, 1995.

(i) Incorporation by reference. Tampa Redesignation Request and Attainment/Maintenance Plan for the Tampa Bay Florida Ozone Nonattainment Area including Emissions Inventory Summary and Projections adopted on November 16, 1994.

(ii) Other material. None.

(90) Revisions to Chapter 62–210, Stationary Sources—General Requirements, submitted by the Florida Department of Environmental Protection on December 21, 1994 and April 24, 1995.

(i) Incorporation by reference.

(A) Revised Sections 62–210.300, ''Permits Required'', except 62–210.300(2)(b)1., and 62–210.350, ''Public Notice and Comment'', effective November 23, 1994. Revised Section 62–210.300(2)(b)1., effective April 18, 1995.

(91) [Reserved]

(92) The Florida Department of Environmental Protection has submitted revisions to the Florida State Implementation Plan on August 12, 1994. These revisions address including the Small Business Stationary Source Technical and Environmental Program in the Florida Administrative Code, Chapter 17–202.

(i) Incorporation by reference.

(A) Chapter 17–202, Small Business Stationary Source Technical and Environmental Compliance Assistance Program adopted on June 30, 1994.

(ii) Additional material. None.

(93) [Reserved]

(94) Revisions to the Florida SIP regarding perchloroethylene dry cleaning facilities submitted on April 24, 1995.

(i) Incorporation by reference.

Sections 62–210.200(17) and (48)(c); 62–210.300(2)(b) and (4); 62–296.200(58); and 62–296.412 of the F.A.C., effective April 18, 1995.

(ii) Other material. None.

[37 FR 10858, May 31, 1972]

EDITORIAL NOTE: For FEDERAL REGISTER CITATIONS affecting § 52.520, see the List of CFR Sections Affected in the Finding Aids section of this volume.

§ 52.521 Classification of regions.

The Florida plan was evaluated on the basis of the following classifications:

Air quality control region	Pollutant				
	Particulate matter	Sulfur oxides	Nitrogen dioxide	Carbon monoxide	Photochemical oxidants (hydrocarbons)
Mobile (Alabama)-Pensacola-Panama City (Florida)-Southern Mississippi Interstate	I	I	III	III	I
Jacksonville (Florida)-Brunswick (Georgia) Interstate	I	II	III	III	I
West Central Florida Intrastate	I	I	III	III	III
Central Florida Intrastate	II	III	III	III	III
Southwest Florida Intrastate	III	III	III	III	III
Southeast Florida Intrastate	II	III	III	III	III

[37 FR 10858, May 31, 1972, as amended 39 FR 16346, May 8, 1974]

§ 52.522 Approval status.

With the exceptions set forth in this subpart, the Administrator approves Florida's plans for the attainment and maintenance of the national standards under section 110 of the Clean Air Act. Furthermore, the Administrator finds the plans satisfy all requirements of Part D, Title I, of the Clean Air Act as amended in 1977, except as noted below. In addition, continued satisfaction of the requirements of Part D, for the ozone portion of the SIP depends on the adoption and submittal of RACT requirements by July 1, 1980 for those sources covered by CTGs issued between January 1978 and January 1979 and adoption and submittal by each subsequent January of additional RACT requirements for sources covered by CTGs issued by the previous January.

[45 FR 17143, Mar. 18, 1980]

§ 52.523 [Reserved]

§ 52.524 Compliance schedules.

(a) The requirements of § 51.262(a) of this chapter are not met since compliance schedules with adequate increments of progress have not been submitted for every source for which they are required.

(b) Federal compliance schedules. (1) Except as provided in paragraph (b)(6) of this section, the owner or operator of any stationary source subject to the following emission limiting regulations in the Florida implementation plan shall comply with the compliance schedule in paragraph (b)(2) of this section, Rules of the State of Florida, Department of Pollution Control, Air Pollution, subsections 17–2.04(2); 17–2.04(3); 17–2.04(6)(a); 17–2.04(6)(b); 17–2.04(6)(d); 17–2.04(6) (e)2.a; 17–2.04(6)(e)3.b; 17–2.04(6)(f); and 17–2.04(6)(h).

(2) Compliance schedule. (i) November 1, 1973—Submit to the Administrator a final control plan, which describes at a minimum the steps which will be taken by the source to achieve compliance with the applicable regulations.

(ii) January 1, 1974—Negotiate and sign all necessary contracts for emission control systems or process modifications, or issue orders for the purchase of component parts to accomplish emission control or process modification.

(iii) February 1, 1974—Initiate onsite construction or installation of emission control equipment or process modification.

(iv) May 1, 1975—Complete onsite construction or installation of emission control equipment or process modification.

(v) July 1, 1975—Achieve compliance with the applicable regulations, and certify such compliance to the Administrator.

(vi) If a performance test is necessary for a determination as to whether compliance has been achieved, such a test must be completed by July 1, 1975. Ten days prior to such a test, notice must be given to the Administrator to afford him the opportunity to have an observer present.

(vii) Five days after the deadline for completing paragraphs (b)(2) (ii) through (iv) in this section, certify to the Administrator whether the increment has been met.

(3) Except as provided in paragraph (b)(6) of this section, the owner or operator of any boiler or furnace of more than 250 million Btu per hour heat input subject to the requirements of Rules of the State of Florida, Department of Pollution Control, Air Pollution, subsections 17–2.04(6)(e)2. c. and d. contained as part of the Florida Implementation Plan shall notify the Administrator, no later than October 1, 1973, of his intent to utilize either low-sulfur fuel or stack gas desulfurization to meet these requirements.

(4) Any owner or operator of a stationary source subject to paragraph (b)(3) of this section who elects to utilize low-sulfur fuel shall be subject to the following compliance schedule:

(i) November 1, 1973—Submit to the Administrator a projection of the amount of fuel, by types, that will be substantially adequate to enable compliance with the applicable regulation on July 1, 1975, and for at least one year thereafter.

(ii) December 31, 1973—Sign contracts with fuel suppliers for fuel requirements as projected above.

(iii) January 31, 1974—Submit a statement as to whether boiler modifications will be required. If modifications will be required, submit plans for such modifications.

(iv) March 15, 1974—Let contracts for necessary boiler modifications, if applicable.

(v) June 15, 1974—Initiate onsite modifications, if applicable.

(vi) March 31, 1975—Complete onsite modifications, if applicable.

(vii) July 1, 1975—Achieve compliance with the requirements of Florida Air Pollution Rules subsections 17–2.04(6)(e)2. c. and d. and certify such compliance to the Administrator.

(viii) If a performance test is necessary for a determination as to whether compliance has been achieved, such a test must be completed by July 1, 1975. Ten days prior to such a test, notice must be given to the Administrator to afford him the opportunity to have an observer present.

(ix) Five days after the deadline for completing paragraphs (b)(4) (ii) through (vi) of this section, certify to the Administrator whether the increment has been met.

(5) Any owner or operator subject to paragraph (b)(3) of this section, who elects to utilze stack gas desulfurization shall be subject to the compliance schedule in paragraph (b)(2) of this section.

(6) (i) None of the above paragraphs shall apply to a source which is presently in compliance with applicable regulations and which has certified such compliance to the Administrator by October 1, 1973. The Administrator may request whatever supporting information he considers necessary for proper certification.

(ii) Any compliance schedule adopted by the State and approved by the Administrator shall satisfy the requirements of this paragraph for the affected source.

(iii) Any owner or operator subject to a compliance schedule in this paragraph may submit to the Administrator no later than October 1, 1973, a proposed alternative compliance schedule. No such compliance schedule may provide for final compliance after the final compliance date on the applicable compliance schedule of this paragraph. If promulgated by the Administrator, such schedule shall satisfy the requirements of this paragraph for the affected source.

(7) Nothing in this paragraph shall preclude the Administrator from promulgating a separate schedule for any source to which the application of the compliance schedule in paragraph (b)(2) or (4) of this section fails to satisfy the requirements of §§ 51.261 and 51.262(a) of this chapter.

[38 FR 16145, June 20, 1973, as amended at 38 FR 22740, Aug. 23, 1973; 38 FR 24333, 24342, Sept. 7, 1973; 38 FR 26325, Sept. 19, 1973; 40 FR 11724, 11725, Mar. 13, 1975; 51 FR 40676, 40677, Nov. 7, 1986; 54 FR 25258, June 14, 1989]

§ 52.525 General requirements.

(a) The requirements of § 51.116(c) of this chapter are not met since the legal authority to provide for public availability of emission data is inadequate.

(b) Regulation for public availability of emission data. (1) Any person who cannot obtain emission data from the Agency responsible for making emission data available to the public, as specified in the applicable plan, concerning emissions from any source subject to emission limitations which are part of the approved plan may request that the appropriate Regional Administrator obtain and make public such data. Within 30 days after receipt of any such written request, the Regional Administrator shall require the owner or operator of any such source to submit information within 30 days on the nature and amounts of emissions from such source and any other information as may be deemed necessary by the Regional Administrator to determine whether such source is in compliance with applicable emission limitations or other control measures that are part of the applicable plan.

(2) Commencing after the initial notification by the Regional Administrator pursuant to paragraph (b)(1) of this section, the owner or operator of the source shall maintain records of the nature and amounts of emissions from such source and any other information as may be deemed necessary by the Regional Administrator to determine whether such source is in compliance with applicable emission limitations or other control measures that are part of the plan. The information recorded shall be summarized and reported to the Regional Administrator, on forms furnished by the Regional Administrator, and shall be submitted within 45 days after the end of the reporting period. Reporting periods are January 1 to June 30 and July 1 to December 31.

(3) Information recorded by the owner or operator and copies of this summarizing report submitted to the Regional Administrator shall be retained by the owner or operator for 2 years after the date on which the pertinent report is submitted.

(4) Emission data obtained from owners or operators of stationary sources will be correlated with applicable emission limitations and other control measures that are part of the applicable plan and will be available at the appropriate regional office and at other locations in the state designated by the Regional Administrator.

[39 FR 34536, Sept. 26, 1974, as amended at 40 FR 55328, Nov. 28, 1975; 51 FR 40676, Nov. 7, 1986]

§ 52.526 Legal authority.

(a) The requirements of § 51.230(f) of this chapter are not met, since section 403.111 of the Florida Statutes could, in some circumstances, prohibit the disclosure of emission data to the public.

Therefore, section 403.111 is disapproved.

[39 FR 34536, Sept. 26, 1974, as amended at 51 FR 40676, Nov. 7, 1986]

§52.527 Control strategy: General.

(a) Since the testing and research rule (FAC 17–1.585) submitted by the Florida Department of Environmental Regulation on April 7, 1980, as a revision of the plan does not meet the requirements of Section 110 of the Clean Air Act and the requirements of section 51.8 of this chapter, it is disapproved, and is not part of the plan.

(b) [Reserved]

[48 FR 52303, Nov. 17, 1983]

§52.528 Control strategy: Sulfur oxides and particulate matter.

(a) In a letter dated October 10, 1986, the Florida Department of Environmental Regulation certified that no emission limits in the State's plan are based on dispersion techniques not permitted by EPA's stack height rules.

(b) The variance granted to the Turkey Point and Port Everglades plants of Florida Power and Light Company from the particulate emission limits of the plan is disapproved because the relaxed limits would cause violation of the Class I increment for sulfur dioxide in the Everglades National Park. These plants must meet the 0.1#/MMBTU particulate limit of the plan.

[48 FR 33868, July 26, 1983, as amended at 54 FR 25455, June 15, 1989]

§52.529 [Reserved]

§52.530 Significant deterioration of air quality.

(a) EPA approves the Florida Prevention of Significant Deterioration (PSD) rule on condition that the State submit to EPA by December 14, 1983, a demonstration that its method of calculating increment consumption is consistent with Federal law and regulations. After receipt of the submittal and consideration of additional comments, EPA will, if it finds the State's method to be consistent, fully approve the Florida plan. If not, the State will change its regulation to implement EPA's approach.

(b) Pending final full approval of the State's PSD plan by EPA, if a source's application can be approved under Florida's rules, but not under EPA's rules, solely because of the different methods of calculating increment consumption, the source must obtain a PSD permit from EPA before beginning construction.

(c) All applications and other information required pursuant to §52.21 of this part from sources located in the State of Florida shall be submitted to the Florida Department of Environmental Regulation, Bureau of Air Quality Management, Twin Towers Office Building, 2600 Blair Stone Road, Tallahassee, Florida 32301.

(d) The requirements of sections 160 through 165 of the CAA are not met since the Florida plan, as submitted, does not apply to certain sources. Therefore, the provisions of §52.21(b) through (w) are hereby incorporated by reference and made a part of the Florida plan for:

(1) Sources proposing to locate on Indian reservations in Florida; and

(2) Permits issued by EPA prior to approval of the Florida PSD rule.

[45 FR 52741, Aug. 7, 1980, as amended at 46 FR 17020, Mar. 17, 1981; 48 FR 52716, Nov. 22, 1983]

§52.532 Extensions.

(a) The Administrator hereby extends for 18 months (until July 1, 1980) the statutory timetable for submittal of Florida's plans to attain and maintain the secondary ambient standard for particulate matter in the Jacksonville and Tampa nonattainment areas (40 CFR 81.310).

[45 FR 2033, Jan. 10, 1980; 45 FR 28112, Apr. 28, 1980]

§52.533 Source surveillance.

The plan lacks test methods for several source categories. As required by §52.12(c)(1) of this part, EPA test methods (found at 40 CFR part 60) will be used by EPA to determine compliance with the following emission limiting standards:

(a) Particulate emissions from citrus plants controlled by a scrubber and subject to the process weight table

(submitted as 17–2.05(2) and reformatted as 17–2.610(1)1.a).

(b) TRS emissions from recovery furnaces at kraft pulp mills (submitted as 17–2.05(6)D and reformatted as 17–2.600(4)1).

(c) Sulfur dioxide emissions from fossil fuel steam sources (submitted as 17–2.05(6)E and reformatted as 17–2.600 (5) and (6)).

(d) Emissions from portland cement plants (submitted as 17–2.05(6)F and reformatted as 17–2.600(7)).

(e) Particulate and visible emissions from carbonaceous fuel burning equipment (submitted as 17–2.05(6)I and reformatted as 17–2.600(10)).

[47 FR 32116, July 26, 1982]

§ 52.534 Visibility protection.

(a) The requirements of section 169A of the Clean Air Act are not met because the plan does not include approvable procedures meeting the requirements of 40 CFR 51.305 and 51.307 for protection of visibility in mandatory Class I Federal areas.

(b) Regulations for visibility new source review. The provisions of § 52.28 are hereby incorporated and made part of the applicable plan for the State of Florida.

[51 FR 5505, Feb. 13, 1986]

§ 52.535 Rules and regulations.

(a) The regulatory portion of the lead implementation plan submitted on September 17, 1984, is disapproved because the laws or regulations needed to implement specific measures necessary to assure attainment and maintenance of the NAAQS for lead were not included.

(b) The following requirements shall apply to all the facilities listed in paragraph (c) of this section:

(1) The facilities listed in paragraph (c) of this section shall conduct an initial test on all sources of lead emissions specified for each facility within 120 days of promulgation of this regulation, unless such sources have been tested within the previous 12 months, and the results submitted to EPA, Region IV, within 30 days after promulgation, and approved. Such test shall demonstrate compliance with the specified emission limit for each source. Source test methods and analytical procedures used shall be in accordance with provisions of part 60, Appendix A, Method 9 and 12. For source testing, a plan of testing including the date(s) the tests will be performed, a description of the test equipment and procedures to be used and the sampling locations with appropriate dimensions, showing upstream and downstream gas flow disturbances, shall be submitted to the EPA Region IV Administrator thirty (30) days prior to the initial test. Results of all source testing and compliance determinations shall be submitted to the Region IV Administrator within thirty (30) days after completion of the test. After completion of the initial performance test required above, the facilities shall conduct annual stack tests for all sources with a specified emission limit.

(2) Non-process fugitive emissions, (i.e., road dust, stock piles, plant grounds, etc.) shall be minimized. Minimization efforts shall include such fugitive dust suppression activities as: chemical stabilization, water spraying with appropriate runoff collection, resurfacing, sweeping, revegetation, and other EPA approved methods. Minimization efforts shall be monitored by EPA via site inspections and review of records and logs of fugitive dust suppression efforts.

(3) Upon submittal and approval by EPA, the Agency will accept an alternative method to demonstrate compliance with the specified emission limit. A submittal for an alternative compliance method must provide an exclusive means (i.e., mathematical relationship with established parameter(s)) to determine compliance with the applicable emission limit. Until an alternative compliance method request is approved by EPA, the initial and annual test requirements will remain in effect.

(4) The owner(s) or operator(s) shall maintain continuous records of plant process and emission control operations as necessary to determine continuous compliance. Such records shall include reports of all process operations and control equipment operating parameters. Such records shall also include reports of all types of process upsets and emission control equipment

malfunction, detailing the nature and duration of the upset or malfunction, the expected effects on emissions, and the corrective actions taken or planned to avoid recurrences. Such records shall be available at the plant site for inspections by the Region IV Administrator of EPA for a period of at least two (2) years.

(5) Source tests shall be performed in accordance with EPA Reference Methods 1 through 4, 9, and 12 (40 CFR part 60, Appendix A). In the case of Method 9, Section 2.5 shall be excluded.

(6) All emissions testing shall be performed at the maximum production rate, or other production rate or operating conditions, which would result in the highest lead emissions.

(c) The following requirements are promulgated as applicable to the indicated stationary sources of lead:

(1) Gulf Coast Lead, 1901 North 66th Street, Tampa, FL. Secondary Lead Smelter Operation.

(i) All emission points shall be limited to the following levels:

Source name	Lead emission rate lb/hr
Blast & Slag Furnaces	1.810
Blast & Slag Furnaces Slag & Product Tapping	0.060
Blast Furnace Charging	0.220
50-ton Melt Kettles (3 total)	0.400
20-ton Keel Cast Kettle	0.080
Total	2.570

(ii) Visible emissions from the closed charge doors on the blast furnace and the refining kettle shall not exceed 5 percent opacity during furnace operation.

(iii) Visible emissions from the charge doors on the blast furnace shall not exceed 10 percent opacity during charging operations.

(iv) Visible emissions from all other sources shall not exceed 5 percent opacity.

(v) No more than one blast furnace shall operate at a time.

(vi) No more than two 50-ton melt kettles shall be operated at a time.

(2) Johnson Controls, Globe Battery Division, 10215 North 30th Street, Tampa, FL. Lead—Acid Battery Manufacturing Plant

(i) All emission points shall be limited to the following levels:

Source name	Lead emission rates—lb/hr
OSI Drying Oven—A	0.008
OSI Drying Oven—B	0.008
Hofman VAC System	0.030
Remelt Rotoclone	0.020
Paste Mixing Rotoclone	0.008
Wirtz Caster #1	0.015
Wirtz Caster #2	0.015
Wirtz Caster #3	0.015
Wirtz Caster #4	0.015
Wirtz Caster #5	0.006
Mark V Cast on Strapline	0.118
Cast on Strapline 1 & 2	0.100
Cast on Strapline #3	0.050
Paste Mixing—dry	0.040
Mill Bearing	0.006
PbO Storage	0.010
Total	0.464

(ii) Visible emissions from all emission points shall not exceed 5 percent opacity during operation.

(3) [Reserved]

(4) Chloride Metals, US. 41/Raleigh Street, Tampa, FL. Secondary Lead Smelter Operation

(i) All emission points shall be limited to the following levels:

Source name	Lead emission rates—lb/hr
Blast Furnace #1	0.600
Slag & Product Tapping—Furnace #1	0.100
Blast Furnace #2	0.080
Slag & Product Tapping—Furnace #2	0.050
Remelt Kettles (4 total)	0.200
PbO Plant	0.220
PbO Transfer	0.220
Total	1.470

(ii) Visible emissions from the closed charge doors on Furnaces No. 1 and 2 shall not exceed 5 percent opacity during furnace operation.

(iii) Visible emissions from the charge doors on Furnaces No. 1 and 2 shall not exceed 10 percent opacity during charging operations.

(iv) Visible emissions from the lead oxide plant shall not exceed 5 percent opacity.

(v) Visible emissions from all other sources shall not exceed 5 percent opacity.

(5) Gould Battery (GNB), 11331 Satellite Boulevard, Orlando, FL. Lead—Acid Battery Manufacturing Plant.

(i) All emission points shall be limited to the following levels:

Source name	GNB ID #	Lead emission rates—lb/hr
Pasting/Parting	B1	0.1950
Assembly	B2	0.2188
Casting, QC Mixing	B3	0.1808
Assembly	B4	0.2998
Assembly	B5	0.4902
Bulk Oxide	B6	0.0142
Central Vaccum	B7	0.0096
Pot Hood	E1	0.1190
Pot Hood	E2	0.0096
Pot Hood	E3	0.0096
Tray Exhaust	E4	0.1238
Paste Oven POS	E5	0.0048
Paste Oven NEG	E6	0.0048
Total		1.6800

(ii) Visible emissions from all emission points shall not exceed 5 percent opacity during operation.

(iii) The following sources shall be limited to operating 4000 hours per year: Pasting/Parting, GNB ID #B1; Assembly, GNB ID #B2; Assembly, GNB ID #B4; Assembly, GNB ID #B5; Central Vaccum, GNB ID #B7; Tray Exhaust, GNB ID #E4; Paste OvenPOS, GNB ID #E5; Paste Oven NEG, GNB ID #E6.

(iv) The Bulk Oxide point source, GNB ID #B6, shall be limited to operating 1000 hours per year.

(v) The following sources shall be limited to operating 5000 hours per year:

Casting, QC Mixing, GNB ID #B3; Pot Hood, GNB ID #E1; Pot Hood, GNB ID #E2; Pot Hood, GNB ID #E3.

[50 FR 45605, Nov. 1, 1985, as amended at 50 FR 52328, Dec. 23, 1985]

Subpart L—Georgia

§ 52.570 Identification of plan.

(a) Title of plan: ''Implementation Plan for Attainment of State and National Ambient Air Standards.''

(b) The plan was officially submitted on January 27, 1972.

(c) The plan revisions listed below were submitted on the dates specified.

(1) Revisions to paragraph (a)(2) of Code Chapter 88–9 submitted on March 28, 1972, by the Assistant Attorney General.

(2) Certification of public hearing submitted on February 14, 1972, by the Georgia Department of Health.

(3) Miscellaneous non-regulatory additions to the plan submitted on March 9, 1972, by the Georgia Department of Health.

(4) Clarifying comments on the plan submitted on May 5, 1972, by the Georgia Department of Health.

(5) Certification of public hearing and miscellaneous additions to Chapter 391–3–1, Sections .02(2)(d), .02(2)(q), .02(2)(r) and .02(6) submitted on July 31, 1972, by the Governor.

(6) Amendments concerning operating permits, Section 391–3–1–.03, submitted on March 20, 1974, by the Georgia Department of Natural Resources.

(7) AQMA identification material submitted on May 17, 1974, by the Georgia Department of Natural Resources.

(8) Revisions to Sections 391–3–1–02(2)(a) and 391–3–1–.02(2)(g) and revocation of Section 391–3–1–02(2)(i) submitted on July 23, 1974, by the Georgia Department of Natural Resources.

(9) Compliance schedules submitted on August 2, 1974, by the Georgia Department of Natural Resources.

(10) Temporary operating permits submitted as compliance schedules on October 8, 1974, by the Georgia Department of Natural Resources.

(11) Temporary operating permits submitted as compliance schedules on November 7, 1974, by the Georgia Department of Natural Resources.

(12) Compliance schedules submitted on January 23, 1975, by the Georgia Department of Natural Resources.

(13) AQMA identification material submitted on March 10, 1975, by the Georgia Department of Natural Resources.

(14) Permit to operate for Georgia Power Company's Plant Atkinson submitted on May 22, 1975, by the Georgia Department of Natural Resources.

(15) Deletion of Section 391–3–1–.02(2)(m), the last sentence in Section 391–3–1–.03(2)(c) and the last sentence in Section 391–3–1–.03(3) submitted on June 30, 1975, by the Georgia Department of Natural Resources.

(16) Miscellaneous plan revisions, submitted on December 16, 1975, by the Georgia Department of Natural Resources.

(17) 1979 Implementation plan revisions for nonattainment areas for ozone, total suspended particulates, and carbon monoxide, submitted on January 17, March 9, 16, 20, June 29, December 27, 1979 and April 8, 1980, by the Georgia Department of Natural Resources.

(18) Order for Georgia Power Company's Plant Bowen, Units 1 and 2, Taylorsville, submitted on May 16, 1979, by the Georgia Department of Natural Resources.

(19) Miscellaneous implementation plan revisions, submitted on March 9, 1979, by the Georgia Department of Natural Resources.

(20) Alternate VOC compliance schedules for Ford and General Motors plants in the Atlanta area, submitted on April 14, 1980 by the Georgia Department of Natural Resources.

(21) Order for Georgia Power Company's Plant Harllee Branch, Unit 3 and 4 submitted on May 13, 1980, by the Georgia Department of Natural Resources.

(22) Air quality surveillance plan submitted on January 29, 1980, by the Georgia Department of Natural Resources.

(23) Permit revision affecting the allowable particulate emission rates from the No. 6 Recovery Boiler, No. 3 Power Boiler and No. 5 Smelt Dissolving Tank at the ITT Rayonier, Inc. in Jesup, Georgia submitted on December 18, 1980, by the Georgia Department of Natural Resources.

(24) Order on Units 1 and 2 of Georgia Power Company's Plant Bowen submitted on December 20, 1980, by the Georgia Department of Natural Resources.

(25) Georgia lead SIP submitted on December 18, 1980, by the Georgia Department of Natural Resources.

(26) Prevention of significant deterioration SIP, submitted on December 18, 1980, by the Georgia Department of Natural Resources.

(27) A modified permit submitted on December 22, 1981, by the Georgia Department of Natural Resources which imposes special reporting and opacity limitations on Union Camp Corporation's Power Boilers 11 and 12 in Savannah, Georgia.

(28) Set II VOC regulations, submitted on December 18, 1980, by the Georgia Department of Natural Resources.

(29) Alternative VOC compliance schedules for three sources in the Atlanta area (St. Regis Paper Co., Printpack, Inc., and American Can Co.), submitted on December 18, 1980, and May 7, 1981, by the Georgia Department of Natural Resources.

(30) Revisions to the Part D plan for the Atlanta CO nonattainment area, submitted on July 30, 1982, by the Georgia Department of Natural Resources.

(31) Bubble permit for Blue Bird Body Company in Fort Valley, submitted on January 27, 1984, by the Georgia Department of Natural Resources.

(32) Visibility new source review regulations and visibility monitoring strategy were submitted to EPA on May 22, 1985, and October 31, 1985.

(i) Incorporation by reference.

(A) Letter of May 22, 1985, from the Georgia Department of Natural Resources and new paragraph (2)(uu) of Rule No. 391–3–1–.02, titled ''Visibility Protection'', adopted by the Georgia Board of Natural Resources on May 1, 1985.

(ii) Additional material.

(A) Narrative SIP, titled ''Georgia's Plan for Visibility Protection in Class I Areas'' which includes the State's Visibility Monitoring Strategy.

(B) Letter dated October 31, 1985, from the Georgia Department of Natural Resources, providing a schedule for the completion of Georgia's Visibility Monitoring Strategy.

(33) [Revised]

(34) Revision to Georgia's plan for visibility protection in Class I areas entitled ''Visibility SIP'' submitted to EPA on August 31, 1987, by the Georgia Environmental Protection Division (GEPD) to satisfy the Part 2 visibility requirements.

(i) Incorporation by reference.

(A) June 10, 1988, letter from the Georgia Department of Natural Resources, and page 5 of the section entitled ''Visibility SIP'' which is part of the Georgia plan for visibility protection in Class I areas. This page contains the periodic review requirements satisfying 40 CFR 51.306(c), and was adopted by the Georgia Department of Natural Resources on August 31, 1987.

(ii) Additional material.

(A) Narrative entitled ''Visibility SIP'', a revision to Georgia's plan for visibility protection in Class I areas.

(35) A revised subsection (2)(c), ''Incinerators,'' of rule 391–3–1–02 was submitted by the Georgia Department of Natural Resources on May 22, 1985.

(i) Incorporation by reference.

(A) Letter of May 22, 1985, from the Georgia Department of Natural Resources and revised subsection (2)(c) of rule 391–3–1–.02, titled ''Incinerators,'' adopted by the Georgia Board of Natural Resources on May 1, 1985.

(ii) Additional material—none.

(36) Revised subsections (b) and (d) of rule 391–3–1–.02 (5), ''Open Burning,'' were submitted by the Georgia Department of Natural Resources on May 22, 1985.

(i) Incorporation by reference.

(A) Letter of May 22, 1985, from the Georgia Department of Natural Resources and revised subsections (b) and (d) of rule 391–3–1–.02(5), entitled ''Open Burning,'' adopted by the Georgia Board of Natural Resources on May 1, 1985, to be effective May 27, 1985.

(ii) Additional material.

(A) Modeling demonstration, submitted on February 19, 1988, by the Georgia Department of Natural Resources.

(37) Revisions to the VOC regulations, to correct RACT deficiencies; Chapter 391–3–1–.01, and .02 of the Georgia Department of Natural Resources Rules for Air Quality Control, which was submitted on January 3, 1991, and April 3, 1991. Change to Chapter 391–3–1–.02(3) to reference a new version of the test manual which includes capture efficiency protocols, which was submitted on September 30, 1991, and November 15, 1991.

(i) Incorporation by reference.

(A) The following Rules of the Georgia Department of Natural Resources, Chapter 391–3–1, Air Quality Control, became State effective on January 9, 1991.

391–3–1–.01(jjj);
391–3–1–.02(2)(a)4.;
391–3–1–.02(2)(t);
391–3–1–.02(2)(u)2.(i) and (iii);
391–3–1–.02(2)(v)2.(i) and (iii);
391–3–1–.02(2)(w)2.(i) and (iii);
391–3–1–.02(2)(x)2.(i), (iii), and (x)3.(v);
391–3–1–.02(2)(y)2.(i) and (iii);
391–3–1–.02(2)(z)2.(i) and (iii);
391–3–1–.02(2)(aa)2.(i) and (iii);
391–3–1–.02(2)(bb)1.(ii);
391–3–1–.02(2)(cc);
391–3–1–.02(2)(ee)1.(iii);
391–3–1–.02(2)(ff)2.(ii)(V) and 3.(iii)(III);
391–3–1–.02(2)(ii)4.(i) and (iii);
391–3–1–.02(2)(jj)2.(i) and (iii);
391–3–1–.02(2)(mm)1.(i), (ii), and (iii);
391–3–1–.02(2)(pp);
391–3–1–.02(2)(qq);
391–3–1–.0292)(rr);
391–3–1–.02(2)(ss);
391–3–1–.02(3)(a);
391–3–1–.02(6)(a)3.

(B) A revised Rule 391–3–1–.02(3)(a) ''Sampling'' which became State effective October 17, 1991.

(ii) Other material—None.

(38) State implementation plan for PM10 which was submitted on April 15, 1988, January 3, 1991, and April 3, 1991, by the Georgia Department of Natural Resources.

(i) Incorporation by reference.

(A) Revisions to Chapter 391–3–1, ''Air Quality Control'' which became State effective April 14, 1988. Rule 391–3–1–.01, ''Definitions'', mm, yyy, zzz, aaaa; Rule 391–3–1–.02(4)(c), ''Ambient Air Standards''; Rule 391–3–1.–02(7), ''Prevention of Significant Deterioration of Air Quality''.

(B) Revisions to Rule 391–3–1–.02(4)(c), ''PM10'', which became State effective January 9, 1991.

(ii) Other material.

(A) April 15, 1988, January 3, 1991, and April 3, 1991, letters from the Georgia Department of Natural Resources.

(39) On December 15, 1986, and November 13, 1992, the Georgia Department of Natural Resources, Environmental Protection Division submitted regulations for Part D New Source Review.

(i) Incorporation by reference. Revisions to the following Rules of Georgia Department of Natural Resources, Environmental Protection Division, effective November 22, 1992:

(A) 391–3–1–.01 introductory paragraph

(B) 391–3–1–.03(8)(c)

(ii) Other material. Letter dated February 28, 1989, from the Georgia Department of Natural Resources, page 3 regarding change in operation of a source.

(40) Revisions to include NO_2 increment requirements in the PSD regulations, Chapter 391–3–.02(7) of the Georgia Department of Natural Resources Administrative Code which was submitted on January 3, 1991.

(i) *Incorporation by reference.*

(A) Rule 391–3–1–.02(7) entitled ''Prevention of Significant Deterioration of Air Quality'' which became state effective on January 9, 1991.

(ii) *Other material.*

(A) Letters dated January 3, 1991, and April 3, 1991, from the Georgia Department of Natural Resources.

(B) Letter dated August 6, 1991, from the Georgia Department of Natural Resources regarding minimum program elements.

(41) [Reserved]

(42) Revisions to the Georgia stack height regulations; Chapter 391–3–1 of the Georgia Department of Natural Resources Administrative Code which were submitted on December 15, 1986, and January 3, 1991.

(i) Incorporation by reference.

(A) Rule 391–3–1–.02 (2)(g), which was adopted by the Georgia Dept. of Natural Resources on December 3, 1986.

(B) Rule 391–3–1–.01 (Definitions) to include definitions (bbbb) and (cccc) for ''stack'' and ''stack in existence''; and Rule 391–3–1–.02 (2)(a)4., which were adopted on December 5, 1990 by the Georgia Department of Natural Resources, and became State law effective January 9, 1991.

(43) The Georgia Environmental Protection Division has submitted revisions to the Georgia State Implementation Plan on September 27, 1995. These revisions address the requirements of section 507 of Title V of the Clean Air Act and establish the Small Business Stationary Source Technical and Environmental Program.

(i) Incorporation by reference.

(A) The submittal of the state of Georgia's Small Business Stationary Source Technical and Environmental Compliance Assistance Program which was adopted on July 20, 1995.

(ii) Additional Material. None.

(44) Revisions to the Georgia State Implementation Plan; Chapter 391–3–1 and Chapter 391–3–10 of the Georgia Department of Natural Resources Administrative Code which were submitted to EPA on November 13, 1992.

(i) Incorporation by reference.

(A) Georgia Department of Natural Resources Air Quality Rules submitted by the Georgia Department of Natural Resources, Environmental Protection Division for inclusion in the Georgia state implementation plan which were adopted on October 28, 1992, are as follows:

391–3–1–.05, 391–3–1–.09, 391–3–1–.10, 391–3–1–.02(2)(zz), 391–3–1–.02(6)(a)4., 391–3–1–.03(5), 391–3–1–.03(6)(h), 391–3–10.01(d)(e), 391–3–10–.04(d), 391–3–10–.07(2), 391–3–10–.10(b), 391–3–10–.12, 391–3–10–.24(11), 391–3–10–.30(1), 391–3–10–.30(2).

(ii) Other material. None.

(45) [Reserved]

(46) Revisions to minor source permit rules submitted by the Georgia Environmental Protection Division on March 15, 1995.

(i) Incorporation by reference. Revised Rule 391–3–1–.03, ''Permits'', sections (1), (2), and (12), effective August 17, 1994.

(ii) Other material. None.

(47) Chapter 391–3–1–.01, .02(2), and .02(7), of the Georgia Department of Natural Resources Rules for Air Quality Control, submitted on June 24, 1994, and November 15, 1994. Change to Chapters 391–3–1–.02(3) and 391–3–1–.02(6) to reference a new version of the Georgia Department of Natural Resources Manual of Procedures for Testing and Monitoring Sources of Air Pollutants, submitted on November 15, 1994.

(i) Incorporation by reference.

(A) The following revised Rules of the Georgia Department of Natural Resources, Chapter 391–3–1, Air Quality Control, became State effective on June 13, 1994:

391–3–1–.02(2)(hh)(iii);
391–3–1–.02(7);

(B) The following revised Rules of the Georgia Department of Natural Resources, Chapter 391–3–1, Air Quality Control, became State effective on November 20, 1994:

391–3–1–.01;
391–3–1–.02(2)(t);
391–3–1–.02(2)(ccc);
391–3–1–.02(2)(eee);
391–3–1–.02(3)(a);
391–3–1–.02(6)(a)2.(v)(I);

391–3–1–.02(6)(a)2.(vii)(I);
391–3–1–.02(6)(a)2.(vii)(II)I.;
391–3–1–.02(6)(b)1.(vi)

(ii) Other material. None.

(48) Clean Fuel Fleet program submitted to EPA by the Georgia Department of Natural Resources on May 5, 1994.

(i) Incorporation by reference.

(A) Addition of Regulations 391–3–21–.01, ''Definitions,'' 391–3–21–.02, ''Covered Area,'' 391–3–21–.03, ''Covered Fleet Operators,'' 391–3–21–.04, ''Covered Fleet Vehicles,'' 391–3–21–.05, ''Determination of Capable of Being Centrally Fueled,'' 391–3–21.06, ''Purchase Requirements,'' 391–3–21.07, ''Emission Standards,'' 391–3–21.08, ''Credit Program,'' 391–3–21.09, ''Transportation Control Exemptions,'' 391–3–21.10, ''Requirements for Fuel Providers,'' 391–3–21–.11, '' Enforcement'' which became effective on May 22, 1994.

(ii) Other material. None.

[37 FR 10859, May 31, 1972]

EDITORIAL NOTE: For FEDERAL REGISTER citations affecting § 52.570, see the List of CFR Sections Affected in the Finding Aids section of this volume.

EFFECTIVE DATE NOTE: At 61 FR 33373, June 27, 1996, § 52.570 was amended by revising paragraph (c)(37)(i)(A), effective Aug. 26, 1996. For the convenience of the user the superseded text appears as follows:

§ 52.570 Identification of plan.

* * * * *

(c) * * *

(37) * * *

(i) * * *

(A) The following revised Rules of the Georgia Department of Natural Resources, Chapter 391–3–1, Air Quality Control, became State effective on January 9, 1991.

391–3–1–.01(jjj);
402–3–1–.02(2)(a)4.;
391–3–1–.02(2)(t);
391–3–1–.02(2)(u)2.(i) and (iii);
391–3–1–.02(2)(v)2.(i) and (iii);
391–3–1–.02(2)(w)2.(i) and (iii);
391–3–1–.02(2)(x)2.(i),(iii), and (x)3.(v);
391–3–1–.02(2)(y)2.(i) and (iii);
391–3–1–.02(2)(z)2.(i) and (iii)
391–3–1–.02(2)(aa)2.(i) and (iii);
391–3–1–.02(2)(bb)1.(ii);
391–3–1–.02(2)(cc);
391–3–1–.02(2)(ee)1.(iii);
391–3–1–.02(2)(ff)2.(ii)(V) and 3. (iii) (III);
391–3–1–.02(2)(ii)4.(i) and (iii);
391–3–1–.02(2)(jj)2.(i) and (iii);
391–3–1–.02(2)(mm)1.(i), (ii) and (iii);
391–3–1–.02(2)(pp);
391–3–1–.02(2)(qq);
391–3–1–.02(2)(rr);
391–3–1–.02(2)(ss);
391–3–1–.02(2)(ww);
391–3–1–.02(6)(a)3.

* * * * *

§ 52.571 Classification of regions.

The Georgia plan was evaluated on the basis of the following classifications:

Air quality control region	Pollutant				
	Particulate matter	Sulfur oxides	Nitrogen dioxide	Carbon monoxide	Photochemical oxidants (hydrocarbons)
Augusta (Georgia)-Aiken (South Carolina) Interstate	I	II	III	III	III
Metropolitan Atlanta Intrastate	I	I	III	III	III
Chattanooga Interstate	I	II	III	III	III
Columbus (Georgia)-Phenix City (Alabama) Interstate	I	III	III	III	III
Central Georgia Intrastate	I	I	III	III	III
Jacksonville (Florida)-Brunswick (Georgia) Interstate	I	II	III	III	I
Northeast Georgia Intrastate	II	III	III	III	III
Savannah (Georgia)-Beaufort (South Carolina) Interstate	I	I	III	III	III
Southwest Georgia Intrastate	II	II	III	III	III

[37 FR 10859, May 31, 1972, as amended at 39 FR 16346, May 8, 1974]

§ 52.572 Approval status.

With the exceptions set forth in this subpart, the Administrator approves Georgia's plans for the attainment and maintenance of the national standards under section 110 of the Clean Air Act. Furthermore, the Administrator finds

the plans satisfy all requirements of Part D, Title I, of the Clean Air Act as amended in 1977, except as noted below.

[44 FR 54050, Sept. 18, 1979]

§52.573 Control strategy: General.

The generic rules and procedures for emission trades (bubbles), submitted on October 27, 1982, by the Georgia Department of Natural Resources, are disapproved because they do not meet the requirements of the Clean Air Act.

[49 FR 44464, Nov. 7, 1984]

§52.574—52.575 [Reserved]

§52.576 Compliance schedules.

(a) [Reserved]

(b) The extended compliance schedule for the General Motors Lakewood Assembly Plant submitted on July 30, 1982, is disapproved because the State has failed to show that the schedule would not interfere with the attainment of the ozone standard in the Atlanta nonattainment area.

[40 FR 3413, Jan. 22, 1975, as amended at 40 FR 18432, Apr. 28, 1975; 40 FR 42352, Sept. 12, 1975; 51 FR 3778, Jan. 30, 1986; 51 FR 40675, 40676, Nov. 7, 1986; 54 FR 25258, June 14, 1989]

§52.577 [Reserved]

§52.578 Control Strategy: Sulfur oxides and particulate matter.

In a letter dated March 26, 1987, the Georgia Department of Natural Resources certified that no emission limits in the State's plan are based on dispersion techniques not permitted by EPA's stack height rules. This certification does not apply to Georgia Power plants; Hammond (Coosa), McDonough (Smyrna), Arkwright (Macon), Branch (Milledgeville), Wansley (Roopville), Scherer (Juliette), and Yates (Newnan), Savannah Electric Plants McIntosh (Rincon) and Port Wentworth (Port Wentworth); Inland (Rome); Buckeye Cellulose (Oglethorpe); Georgia Kraft (Macon), Union Camp (Savannah); and Stone Container (Savannah).

[54 FR 40002, Sept. 29, 1989]

§52.579 Economic feasibility considerations.

Section 88–906(h), (i), (k), (o) and (q) of the Georgia Code is disapproved, since consideration of economic feasibility could, in some cases, conflict, with the requirements of the Act that primary standards be attained as expeditiously as practicable, but in no case later than July 1975.

[39 FR 34536, Sept. 26, 1974]

§52.580 [Reserved]

§52.581 Significant deterioration of air quality.

(a) All applications and other information required pursuant to §52.21 of this part from sources located in the State of Georgia shall be submitted to the Environmental Protection Division, Georgia Department of Natural Resources, 270 Washington Street, S.W., Atlanta, Georgia 30334, instead of the EPA Region IV office.

(b) A letter of commitment concerning the incorporation of EPA's revised modeling guidelines for PSD into the Georgia regulations was submitted to EPA on May 11, 1987, by the Georgia Department of Natural Resources.

[41 FR 24885, June 21, 1976, as amended at 47 FR 6018, Feb. 10, 1982; 52 FR 32918, Sept. 1, 1987]

§52.582 Control strategy: Ozone.

Approval—The Administrator approves the incorporation of the photochemical assessment ambient monitoring system submitted by Georgia on November 8, 1993, into the Georgia State Implementation Plan. This submittal satisfies 40 CFR 58.20(f) which requires the State to provide for the establishment and maintenance of photochemical assessment monitoring stations (PAMS).

[59 FR 46178, Sept. 7, 1994]

§52.583 Additional rules and regulations.

Section 391–3–1–.02(2)(e), Particulate Emissions from Manufacturing Processes, is hereby approved only to the extent that it provides for the establishment, as permit conditions, of

emission limits more stringent than those otherwise applicable under the currently approved Georgia regulations. Any application of this regulation which would result in permit provisions less stringent than those otherwise required by the State's regulations must be formally submitted to EPA for prior approval as a plan revision pursuant to section 110(a) of the Clean Air Act.

[41 FR 35185, Aug. 20, 1976]

Subpart M—Hawaii

§ 52.620 Identification of plan.

(a) Title of plan: ''State of Hawaii Air Pollution Control Implementation Plan''.

(b) The plan was officially submitted on January 28, 1972.

(c) The plan revisions listed below were submitted on the dates specified.

(1) Certification that the plan was adopted submitted on April 4, 1972, by the Department of Health.

(2) Telegram and letters (Non-regulatory) clarifying the plan submitted on May 8, 1972, by the Governor.

(3) Telegram (Non-regulatory) clarifying the particulate matter control strategy submitted on May 22, 1972, by the Governor.

(4) Letter (Non-regulatory) clarifying disapproval of the plan submitted on June 15, 1972, by the Governor.

(5) Revised regulations (in their entirety) for the State of Hawaii submitted on November 21, 1972, by the Governor.

(6) Regulations establishing a permit system for agricultural burning submitted on May 15, 1973, by the Governor.

(7) Compliance schedule submitted on July 27, 1973, by the Governor.

(8) 18-month extension plan for particulate matter submitted on August 15, 1973, by the Governor.

(9) Date for attainment of the national ambient air quality standards for particulate matter submitted on April 25, 1974, by the Governor.

(10) A variance to the Hawaii Public Health Regulations, Chapter 43, Section 7(b)(5) submitted on September 12, 1978 by the Governor.

(11) A variance to the Hawaii Public Health Regulations, Chapter 43, Section 7(b)(5) submitted on February 22, 1979 by the Governor.

(12) The following amendments to the plan were submitted on August 21, 1980, by the Governor.

(i) XII. Air Quality Surveillance Network.

(13) A variance to the Hawaii Public Health Regulations, Chapter 43, section 8 (b)(1) submitted on November 25, 1980 by the Governor.

(14) A variance of the Hawaii Public Health Regulations, Chapter 43, section 8(b)(1) submitted on April 6, 1982, by the Governor.

(15) Hawaii State Lead SIP Revision submitted on October 29, 1982, by the State.

(16) The following amendments to the plan were submitted on December 20, 1982 by the State.

(i) Title 11—Department of Health, Chapter 60, Air Pollution Control.

(A) Amended sections 11–60–01 thru 11–60–29, 11–60–35 thru 11–60–38.

[37 FR 10861, May 31, 1972, as amended at 41 FR 8959, Mar. 2, 1976; 44 FR 23828, Apr. 23, 1979; 44 FR 46274, Aug. 7, 1979; 46 FR 40513, Aug. 10, 1981; 47 FR 3111, Jan. 22, 1982; 48 FR 37403, Aug. 18, 1983]

§ 52.621 Classification of regions.

The Hawaii plan was evaluated on the basis of the following classifications:

Air quality control region	Pollutant				
	Particulate matter	Sulfur oxides	Nitrogen dioxide	Carbon monoxide	Photochemical oxidants (hydrocarbons)
State of Hawaii	II	III	III	III	III

[37 FR 10860, May 31, 1972]

§52.622 [Reserved]

§52.623 Approval status.

With the exceptions set forth in this subpart, the Administrator approves Hawaii's plan for attainment and maintenance of the national standards. The State included various provisions in its plan to provide for the attainment of State ambient air quality standards. As described in the Governor's letters of January 28, May 8, and May 22, 1972, these provisions were included for information purposes only and were not to be considered a part of the plan to implement national standards. Accordingly, these additional provisions are not considered a part of the applicable plan.

[37 FR 10861, May 31, 1972, as amended at 38 FR 12712, May 14, 1973; 39 FR 7280, Feb. 25, 1974]

§52.624 General requirements.

(a) The requirements of §51.116(c) of this chapter are not met since the legal authority to provide for public availability of emission data is inadequate.

(b) *Regulation for public availability of emission data.* (1) Any person who cannot obtain emission data from the Agency responsible for making emission data available to the public, as specified in the applicable plan, concerning emissions from any source subject to emission limitations which are part of the approved plan may request that the appropriate Regional Administrator obtain and make public such data. Within 30 days after receipt of any such written request, the Regional Administrator shall require the owner or operator of any such source to submit information within 30 days on the nature and amounts of emissions from such source and any other information as may be deemed necessary by the Regional Administrator to determine whether such source is in compliance with applicable emission limitations or other control measures that are part of the applicable plan.

(2) Commencing after the initial notification by the Regional Administrator pursuant to paragraph (b)(1) of this section, the owner or operator of the source shall maintain records of the nature and amounts of emissions from such source and any other information as may be deemed necessary by the Regional Administrator to determine whether such source is in compliance with applicable emission limitations or other control measures that are part of the plan. The information recorded shall be summarized and reported to the Regional Administrator, on forms furnished by the Regional Administrator, and shall be submitted within 45 days after the end of the reporting period. Reporting periods are January 1 to June 30 and July 1 to December 31.

(3) Information recorded by the owner or operator and copies of this summarizing report submitted to the Regional Administrator shall be retained by the owner or operator for 2 years after the date on which the pertinent report is submitted.

(4) Emission data obtained from owners or operators of stationary sources will be correlated with applicable emission limitations and other control measures that are part of the applicable plan and will be available at the appropriate regional office and at other locations in the state designated by the Regional Administrator.

[39 FR 34536, Sept. 26, 1974, as amended at 40 FR 55329, Nov. 28, 1975; 51 FR 40676, Nov. 7, 1986]

§52.625 Legal authority.

(a) The requirements of §51.230(f) of this chapter are not met, since sections 322–64(5) and 322–66 of the Hawaii Revised Statutes could, in some circumstances, prohibit the disclosure of emission data to the public. Therefore, sections 322–64(5) and 322–66 are disapproved.

[39 FR 34536, Sept. 26, 1974, as amended at 51 FR 40676, Nov. 7, 1986]

§52.626 Compliance schedules.

(a) [Reserved]

(b) The compliance schedules for the sources identified below are disapproved as not meeting the requirements of Subpart N of this chapter. The regulations cited are air pollution control regulations of the State.

Source	Location	Regulation sections involved	Date of adoption
Nanakuli Paving & Rock Co., Ltd.	Molokai	8, 13	7/27/73.
Kohala Corp	Halaula	8, 12	Do.

[39 FR 16348, May 8, 1974, as amended at 51 FR 40676, Nov. 7, 1986; 54 FR 25258, June 14, 1989]

§ 52.627—52.631 [Reserved]

§ 52.632 Significant deterioration of air quality.

(a) The requirements of sections 160 through 165 of the Clean Air Act are not met, since the plan does not include approvable procedures for preventing the significant deterioration of air quality.

(b) Regulations for preventing significant deterioration of air quality. The provisions of § 52.21(b) through (w) are hereby incorporated and made a part of the applicable state plan for the State of Hawaii.

[43 FR 26410, June 19, 1978, as amended at 45 FR 52741, Aug. 7, 1980]

§ 52.633 Visibility protection.

(a) The requirements of section 169A of the Clean Air Act are not met, because the plan does not include approvable procedures for protection of visibility in mandatory Class I Federal areas.

(b) Regulations for visibility monitoring and new source review. The provisions of §§ 52.26, 52.27 and 52.28, are hereby incorporated and made part of the applicable plan for the State of Hawaii.

(c) *Long-term strategy*. The provisions of § 52.29 are hereby incorporated and made part of the applicable plan for the State of Hawaii.

[50 FR 28553, July 12, 1985, as amended at 52 FR 45137, Nov. 24, 1987]

§ 52.634 Particulate matter (PM–10) Group III SIP.

(a) On September 14, 1988, the Governor of Hawaii submitted a revision to the State Implementation Plan (SIP) for implementing the required monitoring activities and other tasks necessary to satisfy the requirements of the PM–10 Group III SIP.

(b) The Hawaii Department of Health has committed to meet the ongoing requirements for PM–10 Group III areas.

[55 FR 18110, May 1, 1990]

Subpart N—Idaho

§ 52.670 Identification of plan.

(a) Title of plan: ''Idaho Air Quality Implementation Plan.''

(b) The plan was officially submitted on January 31, 1972.

(c) The plan revisions listed below were submitted on the dates specified.

(1) Miscellaneous additions (compliance schedules and non-regulatory provisions) to the plan submitted on February 23, 1972, by the Idaho Air Pollution Control Commission.

(2) Request for delegation of legal authority submitted on March 2, 1972, by the Governor.

(3) Compliance schedules submitted on April 12, 1972, by the Governor.

(4) Request for an 18-month extension for particulate matter in all AQCR's submitted on May 5, 1972, by the Governor.

(5) Miscellaneous additions (Non-regulatory) to the plan submitted on May 26, 1972, by the Idaho Air Pollution Control Commission.

(6) Appendices D and E of the plan submitted on June 9, 1972, by the Governor.

(7) Revisions to the Rules and Regulations for the Control of Air Pollution in Idaho submitted on February 15, 1973, by the Governor.

(8) Compliance schedules submitted on July 23, 1973, by the Governor.

(9) Amendment to Chapter IX of the plan to provide for review of indirect sources and a new Chapter XIV which sets forth the control strategy for attaining secondary particulate matter standards on October 16, 1973, by the Governor.

(10) Revisions to 1972 Session Laws, Chapter 347; 1973 Session Laws, Chapter 87, 136, 137, 138, 139, and 143; Chapters 18 and 52, Idaho Code; and the accompanying Attorney General's opinion submitted August 15, 1973, by the Governor.

(11) A new section 4 of Regulation A (General Provisions) and revised Regulation T (Air Pollution Sources Permits) of the Rules and Regulations for the Control of Air Pollution in Idaho (Chapter VII of the plan), an addition to Chapter XI of the plan to include administrative procedures for indirect source review, and compliance schedules submitted on July 1, 1974, by the Governor.

(12) Air quality maintenance area designation submitted on June 11, 1974, by the Idaho Department of Environmental and Community Services.

(13) An amendment to Regulation C (Ambient Air Quality Standards) and Regulation S (Control of Sulfur Oxide Emissions from Combined Lead/Zinc Smelters) of the Rules and Regulations for the Control of Air Pollution in Idaho and revisions to Chapter IV and Appendix F of the Implementation Plan submitted on January 10, 1975, by the Governor.

(14) Revised sections 2 and 6 of Regulation A (General Provisions) of the Rules and Regulations for the Control of Air Pollution in Idaho submitted on January 24, 1975, by the Governor.

(15) Consent Order for Beker Industries submitted on July 28, 1975 by the Governor.

(16) On January 15, 1980 the Governor submitted the transportation portion of the Boise-Ada County carbon monoxide plan.

(17) On July 1, 1980 the Governor submitted a SIP revision containing a variance from the indirect source regulation for an urban renewal project located in downtown Boise, as well as an adjustment to the TCP which had been submitted to EPA in January 1980.

(18) On February 14, 1980 the State of Idaho Department of Health and Welfare submitted a plan revision to meet the requirements of Air Quality Monitoring 40 CFR part 58, subpart C, § 58.20.

(19) Revisions to the ''Implementation Plan for the Control of Air Pollution in the State of Idaho'' submitted by the Governor of Idaho on January 15, 1980: Chapter I ''Introduction;'' Chapter II ''General Administration;'' Chapter III ''Emissions Inventory;'' Chapter IV ''Air Quality Monitoring;'' Chapter V ''Source Surveillance;'' Chapter VI ''Emergency Episode Plan;'' Chapter VII ''Approval Procedures for New and Modified Sources;'' Chapter VIII ''Non-Attainment Area Plans;'' Chapter VIII–a ''Silver Valley Non-Attainment Plan;'' Chapter VIII–e ''Soda Springs Non-Attainment Plan;'' Appendix A.2 Legal Authority (Section 39–100, *Idaho Code);* Appendix A.3, Title I, Chapter I, Rules and Regulations for the Control of Air Pollution in Idaho, except indirect source review provisions (1–1002.37, 1–1002.76 and 1–1004), variance provisions (1–1007 and 1–1904) and ''Sulfur Dioxide Emission Limitations for Combined Zinc and Lead Smelters'' (1–1851 through 1–1868); Appendix B ''Emission Inventory, Ada County Carbon Monoxide Non-Attainment Area;'' Appendix G ''Permits—Silver Valley'' (six permits); and Appendix K ''Permits—Soda Springs'' (four permits).

(20) Chapter VIII–b ''Lewiston Non-Attainment Plan'' submitted by the Governor of Idaho on January 15, 1980. On December 4, 1980, the Governor submitted revised pages 31–39, an operating permit for a kraft pulp and paper mill (Appendix H.1), operating permits for two grain loading terminals (Appendices H.3 and H.4), and an operating permit for an asphalt plant (Appendix H.5). On February 5, 1981 the Governor further revised the nonattainment area plan by submitting a permit for a wood products operation (Appendix H.2).

(21) Chapter VIII–d ''Pocatello TSP Non-Attainment Plan'' submitted by the Governor of Idaho on March 7, 1980. This submittal included operating permits for an elemental phosphorus plant (Appendix J.1), a phosphate fertilizer manufacturing plant (Appendix J.2), and a Portland cement plant (Appendix J.3). On February 5, 1981, the Governor submitted a revised Chapter VIII–d.

(22) On February 3, 1984 the State of Idaho Department of Health and Welfare submitted a revision to add a lead maintenance strategy to the Idaho Implementation Plan.

(23) On May 29, 1984, the State of Idaho Department of Health and Welfare submitted the Boise-Ada County carbon monoxide attainment plan as an official State Implementation Plan revision. The submittal was then supplemented on January 3, 1985.

(24) A revised Chapter VII *Approval Procedures for New and Modified Facilities;* revised sections 1–1002, 1–1012, 1–1013, 1–1014, and 1–1101 of Appendix A. 3 ''Title 1, Chapter 1, *Rules and Regulations for the Control of Air Pollution in Idaho Manual;*'' and the repeal of sections 1–1003, 1–1102 through 1–1112, and 1–1900 through 1–1906 of Appendix A. 3 ''Title 1, Chapter 1, *Rules and Regulations for the Control of Air Pollution in Idaho Manual;*'' of the Implementation Plan for the Control of Air Pollution in the State of Idaho, submitted by the Director of the State of Idaho Department of Health and Welfare on April 19, 1985. (Sections 1–1003, 1–1102 through 1–1112, and 1–1900 through 1–1906 of Appendix A. 3 ''Title 1, Chapter 1, *Rules and Regulations for the Control of Air Pollution in Idaho Manual*'' were previously approved by EPA at 40 CFR 52.670(c)(19).) An April 3, 1986, commitment letter from the Director of the State of Idaho Department of Health and Welfare regarding stack height provisions.

(i) Incorporation by reference. (A) Revised sections 1–1002, 1–1012, 1–1013, 1–1014, and 1–1101 of Appendix A. 3, ''Title 1, Chapter 1, *Rules and Regulations for the Control of Air Pollution in Idaho Manual*'' of the Implementation Plan for the Control of Air Pollution in the State of Idaho, as adopted by the Idaho Board of Health and Welfare on November 1, 1984. An April 3, 1986, commitment letter from the Director of the State of Idaho Department of Health and Welfare regarding stack height provisions.

(ii) Other materials. (A) Revised Chapter VII *Approval Procedures for New and Modified Facilities* of the Implementation Plan for the Control of Air Pollution in the State of Idaho, submitted by the Director of the Idaho Department of Health and Welfare on April 19, 1985. (This revised chapter replaces an earlier version which was approved by EPA and incorporated by reference at 40 CFR 52.670(c)(19).)

(B) Sections 1–1003, 1–1102 through 1–1112, and 1–1900 through 1–1906 of Appendix A. 3 ''Title 1, Chapter 1, *Rules and Regulations for the Control of Air Pollution in Idaho,*'' of the Implementation Plan for the Control of Air Pollution in the State of Idaho, repealed by the Idaho Board of Health and Welfare on November 1, 1984. (These sections, noted as repealed, replace the earlier versions which were approved by EPA and incorporated by reference at 40 CFR 52.670(c)(19).)

(25) On March 27, 1987, the State of Idaho Department of Health and Welfare submitted revised rules regulating the use of stack heights and dispersion techniques (section 16.01.1002.94 and section 16.01.1014) as revisions to the Idaho state implementation plan. Additional revisions included clarifications to section 16.01.1009 (Total Compliance), and section 16.01.1201.03 (Visible Emissions-Exception).

(i) Incorporation by reference.

(A) March 27, 1987 letter from the State of Idaho Department of Health and Welfare to EPA, Region 10.

(B) Section 16.01.1002.94 (Stack), section 16.01.1014 (Stack Heights and Dispersion Techniques), section 16.01.1009 (Total Compliance) and section 16.01.1201.03 (Visible Emissions-Exception) adopted by the State of Idaho Department of Health and Welfare on February 11, 1987.

(26) On June 15, 1990, the Administrator of the Idaho Department of Health and Welfare submitted amendments to State of Idaho's Rules and Regulations for the Control of Air Pollution in Idaho Manual as revisions to the Idaho state implementation plan as follows: Idaho Administrative Procedures Act, Section 16.01.01002 Definitions, Section 16.01.01012 Procedures and Requirements for Permits to Construct and Operating Permits, and Section 16.01.01101 Air Quality Standards and Area Classification.

(27) On September 4, 1992, the Administrator of the Idaho Department of Health and Welfare submitted a revised and recodified Rules and Regulations for the Control of Air Pollution in Idaho Manual (Idaho Administrative Procedures Act Sections 16.01.01000 through 16.01.01999) as a revision to the Idaho state implementation plan.

(i) Incorporation by reference.

(A) June 15, 1990, letter from the Administrator of the Idaho Department of Health and Welfare to EPA Region 10 submitting amendments to the Idaho state implementation plan.

(B) September 4, 1992, letter from the Administrator of the Idaho Department of Health and Welfare to EPA Region 10 submitting amendments to the Idaho state implementation plan.

(C) Idaho's Rules and Regulations for the Control of Air Pollution in Idaho Manual (except for sections IDAPA 16.01.01007 Variances, IDAPA 16.01.01853 through 16.01.01856 Combined Zinc and Lead Smelters, IDAPA 16.01.0951 through 16.01.01968 Regulation of Standards of Performance for New Stationary Sources, and IDAPA 16.01.01997 Confidentiality of Records) as adopted by the Board of the Idaho Department of Health and Welfare on July 30, 1992, and effective on August 21, 1992.

(28) On April 14, 1992, the State of Idaho submitted a revision to the SIP for Pinehurst, ID, for the purpose of bringing about the attainment of the national ambient air quality standards for particulate matter with an aerodynamic diameter less than or equal to a nominal 10 micrometers. This submittal includes an additional area in Shoshone County adjacent to the City of Pinehurst which EPA designated nonattainment and moderate for PM–10 on January 20, 1994.

(i) Incorporation by reference.

(A) April 7, 1992 letter from Idaho Department of Health and Welfare to EPA Region 10 submitting the Pinehurst Particulate Air Quality Improvement Plan as a revision to the Implementation Plan for the Control of Air Pollution in the State of Idaho. The plan has been adopted in accordance with the authorities and requirements of the Federal Clean Air Act and the Idaho Environmental Protection and Health Act (Idaho Code section 39–10/*et seq*).

(B) SIP revision for Pinehurst Particulate Air Quality Improvement Plan, February 5, 1992 (adopted on April 7, 1992).

(29) On June 29, 1994, the Idaho Department of Health and Welfare submitted a CO State Implementation Plan for Northern Ada County, Idaho.

(i) Incorporation by reference.

(A) June 29, 1994 letter from Idaho Department of Health and Welfare to EPA Region 10 submitting the CO SIP for Northern Ada County, Idaho.

(B) Minor Revision of the Northern Ada County, Idaho 1984 State Implementation Plan for CO, June 1994 (including Ada County Ordinance 228, City of Boise Ordinance 5273, City of Meridian Ordinance 547, City of Garden City Ordinance 558, and City of Eagle Ordinance 177), as adopted by the Idaho Department of Health and Welfare on June 28, 1994.

(30) On January 7, 1994, the Administrator for the Idaho Department of Health and Welfare, Division of Environmental Quality, submitted the State PROGRAM as a revision to the Idaho SIP.

(i) Incorporation by reference.

(A) The January 3, 1994 letter from the Administrator of the Idaho Department of Health and Welfare, Division of Environmental Quality, submitting the PROGRAM to EPA.

(B) The State Implementation Plan Revision to Establish a State Small Business Stationary Source Technical and Environmental Compliance Assistance Program (which includes the text of Idaho Code 39–118E, Small Business Assistance, signed into law Senate bill 1236 by Idaho Governor, Cecil D. Andrus, on March 29, 1993), dated December 29, 1993, and adopted on January 3, 1994.

(31) On November 14, 1991, and on December 30, 1994, the Idaho Department of Health and Welfare (IDHW) submitted revisions to the Idaho State Implementation Plan (SIP) for the Northern Ada County/Boise Particulate (PM_{10}) Air Quality Improvement Plan.

(i) Incorporation by reference.

(A) November 14, 1991, letter from the IDHW Administrator to the EPA Region 10 Regional Administrator submitting a revision to the Idaho SIP for the Northern Ada County/Boise Particulate Air Quality Improvement Plan; The Northern Ada County Boise Particulate (PM_{10}) Air Quality Improvement Plan adopted on November 14, 1991.

(B) December 30, 1994, letter from the IDHW Administrator to the EPA Region 10 Regional Administrator including a revision to the Idaho SIP for the Northern Ada County/Boise PM_{10} Air Quality Improvement Plan; Appendix C–1, Supplemental Control Strategy Documentation, Northern Ada County/Boise PM_{10} Air Quality Improvement Plan, adopted December 30, 1994, with

the following attachments: Garden City Ordinances #514 (May 14, 1987), #533 (January 10, 1989) and #624 (September 13, 1994); Meridian Ordinance #667 (August 16, 1994); Eagle Ordinance #245 (April 26, 1994); Ada County Ordinance #254 (November 3, 1992); and Table Ordinance-1 (December 30, 1994).

[37 FR 10861, May 31, 1972, as amended at 41 FR 8959, Mar. 2, 1976; 41 FR 23202, June 9, 1976; 45 FR 70261, Oct. 23, 1980; 46 FR 15136, Mar. 4, 1981; 47 FR 32533, July 28, 1982; 49 FR 18833, May 3, 1984; 50 FR 23811, June 6, 1985; 51 FR 22810, June 23, 1986; 53 FR 48540, Dec. 1, 1988; 58 FR 39447, July 23, 1993; 59 FR 43751, Aug. 25, 1994; 59 FR 47804, Sept. 19, 1994; 59 FR 61549, Dec. 1, 1994; 60 FR 27893, May 26, 1995; 61 FR 27023, May 30, 1996]

EFFECTIVE DATE NOTE: At 61 FR 27023, May 30, 1996, § 52.670 was amended by adding paragraph (c)(31), effective July 29, 1996.

§ 52.671 Classification of regions.

The Idaho plan was evaluated on the basis of the following classifications:

Air quality control region	Pollutants				
	Particulate matter	Sulfur oxides	Nitrogen dioxide	Carbon monoxide	Ozone
Eastern Idaho Intrastate	I	II	III	III	III.
Eastern Washington Northern Idaho Interstate (Idaho)	I	II	III	III	III.
Idaho Intrastate	I	III	III	III	III.
Metropolitan Boise Intrastate	II	III	III	I	III.

[37 FR 10861, May 31, 1972, as amended at 45 FR 70261, Oct. 23, 1980; 47 FR 32534, July 28, 1982]

§ 52.672 [Reserved]

§ 52.673 Approval status.

With the exceptions set forth in this subpart, the Administrator approves Idaho's plan for the attainment and maintenance of the national standards.

§ 52.674 Legal authority.

(a) The requirements of § 51.230(f) of this chapter are not met since the authority to release emission data to the public could be precluded in certain circumstances by section 39–111 of the Idaho Code annotated.

(b) Delegation of Authority: Pursuant to section 114 of the Act, Idaho requested a delegation of authority to enable it to collect, correlate, and release emission data to the public. The Administrator has determined that Idaho is qualified to receive a delegation of the authority it requested. Accordingly, the Administrator delegates to Idaho his authority under section 114(a) (1) and (2) and section 114(c) of the Act, i.e., authority to collect, correlate, and release emission data to the public.

[37 FR 10861, May 31, 1972, as amended at 39 FR 41253, Nov. 11, 1974; 51 FR 40676, Nov. 7, 1986]

§ 52.675 Control strategy: Sulfur oxides—Eastern Idaho Intrastate Air Quality Control Region.

(a)(1) Regulation R of the Rules and Regulations for the Control of Air Pollution in Idaho, which is part of the sulfur dioxide (SO_2) control strategy, is disapproved since it is inconsistent with the purposes and provisions of subpart G of this chapter. These requirements are not met by Regulation R in that the SO_2 control strategy contained therein is not adequate for the attainment and maintenance of SO_2 national ambient air quality standards (NAAQS).

(2) Rules 1–1801 through 1–1804 (Rules for Control of Sulfur Oxide Emissions from Sulfuric Acid Plants) of the ''Rules and Regulations for the Control

of Air Pollution in Idaho'' are inadequate to ensure attainment and maintenance of Sulfur Dioxide National Ambient Air Quality Standards in the Eastern Idaho Intrastate Air Quality Control Region. Special limits have previously been established for certain existing acid plants in this Air Quality Control Region (§§ 52.670(c)(15) and 52.675(b)). Therefore, Rules 1–1801 through 1–1804 are approved except as they apply to existing acid plants with approved or promulgated emission limits that are more stringent than the limit found in 1–1802.

(b) Regulation for control of sulfur dioxide (SO_2) emissions: Sulfuric Acid Plants. (1) The provisions of this paragraph shall apply to the owner(s) and operator(s) of The J. R. Simplot Company's Minerals and Chemical Division, located in Power County, Idaho, in the Eastern Idaho Intrastate Air Quality Control Region.

(2) The owner(s) and operator(s) of The J. R. Simplot Company facility shall utilize best engineering techniques in the operation of their plant to prevent fugitive SO losses. Such techniques shall include but are not limited to:

(i) Operating and maintaining all conducts, flues, and stacks in a leakfree condition.

(ii) Operating and maintaining all process equipment and gas collection systems in such a fashion that leakage of SO_2 gases will be prevented to the maximum extent possible.

(3) The owner(s) and operator(s) of The J. R. Simplot Company facility shall limit SO_2 emissions from their sulfuric acid plants per the following:

(i) The combined SO_2 emissions from the designated 100 and 200 sulfric acid plants shall not exceed 2 kilograms (kg) per metric ton (4 pounds per ton) of 100 percent sulfuric acid produced.

(ii) The SO_2 emissions from the designated 300 sulfuric acid plant and stack shall not exceed 994 kg per hour (2190 pounds per hour).

(4) (i) The owner(s) and operator(s) of The J. R. Simplot Company shall achieve compliance with the requirements specified in paragraphs (b)(2) and (b)(3) of this section in accordance with the following schedule:

(A) Advise EPA as to status of contract(s) and construction schedules for pollution abatement projects within 30 days of the effective date of this regulation.

(B) Attain final compliance by July 31, 1976.

(ii) A performance test of the 300 acid plant shall be necessary to determine whether compliance has been achieved with the requirements of paragraph (b)(3) of this section. Such test must be completed within 15 days of the final compliance date specified in paragraph (b)(4)(i) of this section. Notice must be given to the Administrator at least 10 days prior to such a test to afford him an opportunity to have an observer present.

(iii) Within 60 days after achieving the maximum production rate at which the 100 and 200 acid plant will be operated, but not later than 180 days after initial start-up of these plants and at such other times as may be required by the Administrator under section 114 of the Clean Air Act, the owner(s) and operator(s) of the facility shall conduct performance test(s) in accordance with the requirements of 40 CFR 60.8.

(iv) If the owner(s) and operator(s) of the J. R. Simplot Company facility are presently in compliance with the requirements of paragraphs (b)(2) and (b)(3) of this section or in compliance with a portion of these requirements, such compliance shall be certified to the Administrator within 15 days following the date of the publication of these requirements as a final regulation in the FEDERAL REGISTER. If the owner(s) or operator(s) of The J. R. Simplot Company achieve compliance prior to July 31, 1976, such compliance shall be certified to the Administrator within 15 days of the date of achieving compliance. The Administrator may request whatever supporting information he considers necessary to determine the validity of the certification.

(5) (i) By no later than September 30, 1976, the owner(s) and operator(s) of The J. R. Simplot Company facility shall install, calibrate, maintain and operate measurement system(s) for:

(A) Continuously monitoring and recording SO_2 concentration rates in each sulfuric acid plant discharge

stack per the requirements of 40 CFR 60.13 and 60.84.

(B) Continuously monitoring and recording gas volumetric flow rates in the exhaust stack of the designated 300 sulfuric acid plant.

(ii) By no later than October 30, 1976, and at such other times following that date as the Administrator may specify, the SO_2 concentration measurement system(s) and stack gas volumetric flow rate system(s) installed and used pursuant to this paragraph shall be demonstrated to meet the measurement system performance specifications prescribed in 40 CFR 60.13 and Appendix E to this part, respectively. The Administrator shall be notified at least 10 days prior to the start of this field test period to afford the Administrator the opportunity to have an observer present.

(iii) The sampling point for monitoring the concentration of SO_2 emissions shall be in the duct at the centroid of the cross section of the discharge stack if the cross sectional area is less than 4.65 m^2 (50 ft^2) or at a point no closer to the wall than 0.91 m (3 ft) if the cross sectional area is 4.65 m^2 (50 ft^2) or more. The monitor sample point shall be representative of the average concentration in the duct.

(iv) The measurement system(s) shall be maintained, operated and calibrated in accordance with the methods prescribed by the manufacturers. Records of maintenance and/or calibration shall be kept and submitted to the Administrator upon request. These records shall clearly show instrument readings before and after such calibration and/or maintenance.

(v) The owner(s) and operator(s) of The J. R. Simplot Company facility shall maintain a daily record of three hour average emission rate measurements for each sulfuric acid plant. Three hour average emission rates shall be calculated for each day beginning at midnight. For the 100 and 200 acid plants, the calculations shall be in conformance with 40 CFR 60.84. For the 300 acid plant, average SO_2 emission rates expressed in kg SO_2 per hour shall be calculated. The results of these calculations for each month shall be submitted to the Administrator within 15 days following the end of each month. Such submission shall identify each period of excess emissions that occurred and the nature and cause of any malfunction (if known), the corrective action taken or preventative measures adopted. The records of such measurements including strip charts and other appropriate raw data shall be retained for a minimum of two years following the date of such measurements.

(vi) The continuous monitoring and recordkeeping requirements of paragraph (b)(5) of this section shall become applicable September 30, 1976.

(6)(i) Compliance with the requirements set forth in paragraph (b)(3) of this section shall be determined using the emission rates measured by the continuous measurement system(s) installed, calibrated, maintained and operated in accordance with the requirements of paragraph (b)(5) of this section.

(ii) At the Administrator's discretion, compliance may also be determined using the manual source test methods per 40 CFR 60.85 and Appendix A to part 60 of this title. Emission rates for each stack shall be expressed in units consistent with those in paragraph (b)(3) of this section.

(iii) A violation of the requirements of paragraph (b)(3) of this section shall occur whenever the SO_2 emission rates determined according to paragraph (b)(6)(i) or (b)(6)(ii) of this section exceed the corresponding SO_2 emission rates specified in paragraph (b)(3) of this section.

(7) The owner(s) and operator(s) of The J. R. Simplot Company facility shall by September 30, 1976, install, calibrate, maintain and operate a network for continuously monitoring ground level ambient SO_2 concentrations and wind speed and direction.

(i) The monitoring network shall consist of at least four ambient SO_2 monitoring stations and one meteorological station placed at locations approved by the Administrator.

(ii) The SO_2 monitoring network shall be consistent with automated equivalent methods for measurement of ambient concentrations of SO_2 as defined in part 53 of this chapter.

(iii) The monitoring network installed and used pursuant to this subparagraph shall be maintained, operated and calibrated in accordance with the methods prescribed by the manufacturers. Records of maintenance and/or calibration shall be kept and submitted to the Administrator upon request. These records shall clearly show instrument readings before and after such calibration and/or maintenance.

(iv) The owner(s) and operator(s) of The J. R. Simplot Company facility shall maintain a daily record of all measurements required by this subparagraph. Strip charts and other raw data from the monitoring network shall be retained for a minimum of two years following the date of such measurement.

(v) The owner(s) and operator(s) of The J. R. Simplot Company shall calculate hourly average ambient SO_2 concentrations, wind speed, and wind direction from each monitoring station and submit such values to the Administrator within 15 days following the end of each month.

(vi) The continuous monitoring and recordkeeping requirements of paragraph (b)(7) of this section shall become applicable September 30, 1976 and shall remain applicable until such time as the Administrator declares that an adequate ambient air data base has been established, which shall be no earlier than at least one calendar year.

(vii) Within 90 days of the Administrator's declaration of an adequate data base, Simplot shall submit to the Administrator a technical analysis of the degree of permanent control required on the 300 acid plant to ensure attainment and maintenance of NAAQS.

(8) Nothing in paragraph (b) of this section shall be construed to relieve the owner(s) and operator(s) of The J. R. Simplot Company to comply with any applicable requirements of part 60 of this title. In the event of conflicting requirements or interpretations between part 60 of this title and this paragraph, the more restrictive interpretation or requirement shall apply.

(9) In the event that measurement systems cannot be installed and operational by the date specified in this section, The J. R. Simplot Company shall propose the earliest possible date by which such requirements can be met. Such proposal shall include adequate justification and supporting documentation.

[41 FR 23202, June 9, 1976, as amended at 47 FR 32534, July 28, 1982; 51 FR 40676, Nov. 7, 1986]

§§52.676—52.678 [Reserved]

§52.679 Contents of Idaho State Implementation Plan.

IMPLEMENTATION PLAN FOR THE CONTROL OF AIR POLLUTION IN THE STATE OF IDAHO

Chapter I—Introduction (submitted 1–15–80)
Chapter II—Administration (submitted 1–15–80)
Chapter III—Emissions Inventory (submitted 1–15–80)
Chapter IV—Air Quality Monitoring (submitted 1–15–80, 2–14–80)
Chapter V—Source Surveillance (submitted 1–15–80)
Chapter VI—Emergency Episode Plan (submitted 1–15–80)
Chapter VII—Approval Procedures for New and Modified Facilities (submitted 4–19–85)
Chapter VIII—Non-Attainment Area Plan
- VIII-a—Silver Valley Nonattainment Plan (submitted 1–15–80)
- VIII-b—Lewiston Nonattainment Plan (submitted 1–15–80, 12–4–80)
- VIII-c—Transportation Control Plan for the carbon monoxide of Ada County (submitted 5–24–84, 1–3–85, 3–25–85)
- VIII-d—Pocatello TSP Nonattainment Plan (submitted 3–7–80, 2–5–81)
- VIII-e—Soda Springs Nonattainment Plan (submitted 1–15–80)

Chapter IX—Reserved
Chapter X—Plan for Maintenance of National Ambient Air Quality Standards for Lead (submitted 2–3–84)
Appendix A—Legal Authority and Other General Administrative Matters (submitted 1–15–80)
Appendix A.2—Section 39–100, Idaho Code (submitted 1–15–80)
Appendix A.3—Title 1, Chapter 1, Rules and Regulations for Control of Air Pollution in Idaho Manual (submitted 1–15–80, 4–19–85, 6–15–90, 8–21–92)
- 01.01000. Legal Authority (6–28–78)
- 01.01001. Policy (6–28–78)
- 01.01002. Title (12–31–91)
- 01.01003. Definitions
- 01.01003,01. Act (4–1–72)
- 01.01003,02. Actual Emissions (11–1–84)
- 01.01003,03. Adverse Effect on Visibility (11–1–84)
- 01.01003,04. Agricultural Field (3–12–85)

01.01003,05. Air Contaminant (11–1–84)
01.01003,06. Air Pollution (1–24–69)
01.01003,07. Air Quality (4–1–72)
01.01003,08. Air Quality Criterion (4–1–72)
01.01003,09. Allowable Emissions (11–1–84)
01.01003,10. Ambient Air (11–1–84)
01.01003,11. Ambient Air Quality Violation (8–11–75)
01.01003,12. ASTM (4–1–72)
01.01003,13. Attainment Area (11–1–84)
01.01003,14. Background Level (6–20–74)
01.01003,15. Baseline (Area, Concentration, Date) (12–31–91)
01.01003,16. Best Available Control Technology (BACT) (11–1–84)
01.01003,17. Board (6–20–74)
01.01003,18. BTU (11–1–84)
01.01003,19. Collection Efficiency (4–1–72)
01.01003,20. Commence Construction or Modification (11–1–84)
01.01003,21. Complete (11–1–84)
01.01003,22. Construction (11–1–84)
01.01003,23. Control Equipment (4–1–72)
01.01003,24. Controlled Emission (4–1–72)
01.01003,25. Criteria Pollutant (11–1–84)
01.01003,26. Department (6–20–74)
01.01003,27. Designated Facility (11–1–84)
01.01003,28. Director (12–31–91)
01.01003,29. Emission (8–21–92)
01.01003,30. Emission Standard (11–1–84)
01.01003,31. Emission Standard Violation (11–1–84)
01.01003,32. Emissions Unit (11–1–84)
01.01003,33. Equivalent Air-Dried Kraft Pulp (5–16–71)
01.01003,34. Existing Stationary Source or Facility (11–1–84)
01.01003,35. Facility (11–1–84)
01.01003,36. Federal Class I Area (12–31–91)
01.01003,37. Federal Land Manager (11–1–84)
01.01003,38. Fire Hazard (3–12–85)
01.01003,39. Fuel-Burning Equipment (4–1–72)
01.01003,40. Fugitive Dust (11–1–84)
01.01003,41. Fugitive Emissions (11–1–84)
01.01003,42. Garbage (3–12–85)
01.01003,43. Hazardous Air Pollutant (11–1–84)
01.01003,44. Hazardous Waste (3–12–85)
01.01003,45. Hot-Mix Asphalt Plant (1–24–69)
01.01003,46. Incinerator (4–1–72)
01.01003,47. Indian Governing Body (11–1–84)
01.01003,48. Indian Reservation (11–1–84)
01.01003,49. Industrial Process (11–1–84)
01.01003,50. Innovative Control Technology (11–1–84)
01.01003,51. Integral Vista (11–1–84)
01.01003,52. Kraft Pulping (5–16–71)
01.01003,53. Lowest Achievable Emission Rate (LAER) (11–1–84)
01.01003,54. Major Facility (11–1–84)
01.01003,55. Major Modification (11–1–84)
01.01003,56. Malfunction (12–5–74)
01.01003,57. Mandatory Federal Class I Area (11–1–84)
01.01003,58. Modification (11–1–84)
01.01003,59. Monitoring (4–1–72)
01.01003,60. Multiple Chamber Incinerator (4–1–72)
01.01003,61. Net Emissions Increase (12–31–91)
01.01003,62. New Stationary Source or Facility (12–31–91)
01.01003,63. Nonattainment Area (11–1–84)
01.01003,64. Noncondensables (4–1–72)
01.01003,65. Odor (4–1–72)
01.01003,66. Opacity (11–1–84)
01.01003,67. Open Burning (4–1–72)
01.01003,68. Operating Permit (12–31–91)
01.01003,69. Particulate Matter (4–1–72)
01.01003,70. Particulate Matter Emissions (5–16–90)
01.01003,71. Permit to Construct (12–31–91)
01.01003,72. Person (11–1–84)
01.01003,73. PM–10 (5–16–90)
01.01003,74. PM–10 Emissions (5–16–90)
01.01003,75. Portable Equipment (11–1–84)
01.01003,76. PPM (parts per million) (4–1–72)
01.01003,77. Prescribed Fire Management Burning (3–12–85)
01.01003,78. Primary Ambient Air Quality Standard (4–1–72)
01.01003,79. Process or Process Equipment (11–1–84)
01.01003,80. Process Weight (11–1–84)
01.01003,81. Process Weight Rate (11–1–84)
01.01003,82. Reasonable Further Progress (RFP) (11–1–84)
01.01003,83. Salvage Operations (4–1–72)
01.01003,84. Secondary Ambient Air Quality Standard (4–1–72)
01.01003,85. Secondary Emissions (11–1–84)
01.01003,86. Significant (5–16–90)
01.01003,87. Significant Contribution (5–16–90)
01.01003,88. Small Fire (3–12–85)
01.01003,89. Smoke (4–1–72)
01.01003,90. Smoke Management Plan (12–31–91)
01.01003,91. Smoke Management Program (3–12–85)
01.01003,92. Source (11–1–84)
01.01003,93. Source Operation (4–1–72)
01.01003,94. Stack (3–3–87)
01.01003,95. Standard Conditions (12–31–91)
01.01003,96. Stationary Source (11–1–84)
01.01003,97. Time Intervals (11–1–84)
01.01003,98. Total Suspended Particulates (5–16–90)
01.01003,99. Trade Wastes (3–12–85)
01.01003,100. TRS (total reduced sulfur) (5–16–71)
01.01003,101. Unclassifiable Area (11–1–84)
01.01003,102. Uncontrolled Emission (11–1–84)
01.01003,103. Visibility Impairment (11–1–84)
01.01003,104. Wigwam Burner (4–1–72)
01.01004, Incorporations by Reference (12–31–91)
01.01004,01. Locations Within the Department (12–31–91)
01.01004,02. Federal Publications (5–16–90)
01.01005. Reporting

01.01005,01. Requirements by Department (6–26–75)
01.01005,02. Requirements by Administrator (10–25–72)
01.01005,03. Format of Reports (4–1–72)
01.01005,04. Conformance to Rules (12–31–91)
01.01006. Upset Conditions, Breakdown (12–31–91)
01.01006,01. Upset Reports (5–7–76)
01.01006,02. Scheduled Maintenance (5–7–76)
01.01006,03. Correction of Condition (5–7–76)
01.01006,04. Auxiliary Equipment (5–7–76)
01.01008. Circumvention (12–31–91)
01.01009. Total Compliance (1–24–69)
01.01010. Sampling and Analytical Procedures (1–24–69)
01.01011. Provisions Governing Specific Activities
01.01011,01. Toxic Substances (12–31–91)
01.01011,02. Modifying Physical Conditions (1–24–69)
01.01011,03. Source Density (12–31–91)
01.01011,04. Polychlorinated Biphenyls (PCBs) (12–31–91))
01.01012. Procedures and Requirements for Permits to Construct and Operating Permits
01.01012,01. Purpose (12–31–91)
01.01012,02. Permit to Construct (12–31–91)
01.01012,03. Operating Permit (12–31–91)
01.01012,04. Application Procedures (12–31–91)
01.01012,05. Permit Requirements for New and Modified Stationary Sources (11–1–84)
01.01012,06. Permit Requirements for New Major Facilities or Major Modifications in Nonattainment Areas (12–31–91)
01.01012,07. Permit Requirements for New Major Facilities or Major Modifications in Attainment or Unclassifiable Areas (12–31–91)
01.01012,08. Optional Offsets for Permits to Construct (12–31–91)
01.01012,09. Requirements for Alternative Emission Limits (Bubbles) (12–31–91)
01.01012,10. Requirements for Banking Emission Reduction Credits (ERC's) (12–31–91)
01.01012,11. Requirements for Emission Reduction Credit (11–1–84)
01.01012,12. Demonstration of Net Air Quality Benefit and Ambient Equivalence (5–16–90)
01.01012,13. Procedure for Issuing Permits (12–31–91)
01.01012,14. Conditions for Permits to Construct and Operating Permits (12–31–91)
01.01012,15. Obligation to Comply (11–1–84)
01.01013. Registration Procedures and Requirements for Portable Equipment
01.01013,01. Registration Requirements (12–31–91)
01.01013,02. Compliance with Regulations (11–1–84)
01.01014. Stack Heights and Dispersion Techniques
01.01014,01. Applicability (3–3–87)
01.01014,02. Definitions (12–31–91)
01.01014,03. Requirements (3–3–87)
01.01014,04. Opportunity for Public Hearing (12–31–91)
01.01014,05. Approval of Field Studies and Fluid Models (12–31–91)
01.01014,06. No Restriction on Actual Stack Height (3–3–87)
01.01015—01.01050 (Reserved)
01.01051. Air Pollution Emergency Regulation (12–31–91)
01.01052. Episode Criteria
01.01052,01. Stages (6–28–78)
01.01052,02. Effect of Stages (6–28–78)
01.01052,03. Criteria for Defining Episode Stages (6–28–78)
01.01052,04. Episode Stages: Emergency Episode Air Pollution Criteria—Table (4–1–72)
01.01052,05. Criteria for Defining Levels Within Stages (6–28–78)
01.01053. Public Notification
01.01053,01. Information to be Given (12–31–91)
01.01053,02. Manner and Frequency of Notification (4–1–72)
01.01053,03. Notification to Sources (6–28–78)
01.01054. General Rules (6–28–78)
01.01054.01 Stage 1—Air Pollution Forecast (6–28–78)
01.01054,02. Stage 2—Alert (6–28–78)
01.01054,03. Stage 3—Warning (6–28–78)
01.01054,04. Stage 4—Emergency (12–31–91)
01.01055. Specific Emergency Episode Abatement Plans for Point Sources (12–31–91)
01.01056—01.01100 (Reserved)
01.01101. Air Quality Standards and Area Classification
01.01101,01. Ambient Air Quality Standards (12–31–91)
01.01101,02. Designation of Attainment, Unclassifiable, and Nonattainment Areas (11–1–84)
01.01101,03. Baselines for Prevention of Significant Deterioration (5–16–90)
01.01101,04. Classification of Prevention of Significant Deterioration Areas (11–1–84) except for 01.01101,04.b.ii(a) (12–31–91)
01.01101,05. Prevention of Significant Deterioration (PSD) Increments (12–31–91)
01.01102—01.01150 (Reserved)
01.01151. Rules for Control of Open Burning
01.01151,01. Purpose and Effective Date (12–31–91)
01.01151,02. Fire Permits, Hazardous Materials and Liability (12–31–91)
01.01151,03. Nonpreemption of Other Jurisdictions (12–31–91)
01.01151,04. General Restrictions (12–31–91)
01.01151,05. Alternatives to Open Burning (12–31–91)
01.01152 (Reserved)
01.01153. Categories of Allowable Burning (12–31–91)

01.01153,01. Recreational and Warming Fires (3–12–85)
01.01153,02. Weed Control Fires (3–12–85)
01.01153,03. Training Fires (12–31–91)
01.01153,04. Industrial Flares (3–12–85)
01.01153,05. Residential Solid Waste Disposal Fires (3–12–85)
01.01153,06. Landfill Disposal Site fires (12–31–91)
01.01153,07. Orchard Fires (12–31–91)
01.01153,08. Prescribed Burning (12–31–91) 2401.01153,09. Dangerous Material Fires (3–12–85)
01.01153,10. Infectious Waste Burning (12–31–91)
01.01154—01.01200 (Reserved)
01.01201. Visible Emissions (12–21–79)
01.01201,01. Exemptions (12–21–79)
01.01201,02. Standards for Exempted Sources (12–31–91)
01.01201,03. Exception (12–31–91)
01.01202 (Reserved)
01.01203. General Restrictions of Visible Emissions From Wigwam Burners (12–21–79)
01.01204—01.01250 (Reserved)
01.01251. Rules for Control of Fugitive Dust (12–31–91)
01.01252. General Rules
01.01252,01. Use of Water or Chemicals (1–25–79)
01.01252,02. Application of Dust Suppressants (1–25–79)
01.01252,03. Use of Control Equipment (1–25–79)
01.01252,04. Covering of Trucks (1–25–79)
01.01252,05. Paving (1–25–79)
01.01252,06. Removal of Materials (1–25–79)
01.01253—01.01300 (Reserved)
01.01301. Fuel Burning Equipment—Particulate Matter
01.01301,01. Standards for New Sources (12–21–79)
01.01301,02. Standards for Minor and Existing Sources (12–21–79)
01.01301,03. Combinations of Fuels (12–21–79)
01.01301,04. Averaging Period (12–31–91)
01.01301,05. Altitude Correction (12–31–91)
01.10302—01.01326 (Reserved)
01.01327. Emission Limitations (1–24–69)
01.01328. Allowable Rate of Emission Based on Process Weight Rate—Table (1–24–69)
01.01329. Particulate Matter—New Equipment Process Weight Limitations
01.01329,01. General Restrictions (12–21–79)
01.01329,02. Minimum Allowable Emission (12–31–91)
01.10329,03. Averaging Period (12–31–91)
01.01329,04. Exemption (12–31–91)
01.01329,05. Emission Standards—Table (12–31–91)
01.01330. Particulate Matter—Existing Equipment Process Weight Limitations (12–31–91)
01.01330,01. General Restrictions (12–21–79)
01.01330,02. Minimum Allowable Emission (12–31–91)
01.01330,03. Averaging Period (12–31–91)
01.01330,04. Exemptions (12–31–91)
01.01330,05. Emission Standards—Table (12–31–91)
01.01331—01.01350 (Reserved)
01.01351. Rules for Sulfur Content of Fuels (12–31–91)
01.01352. Definitions as Used in This Regulation
01.01352,01. ASTM (4–1–72)
01.01352,02. Distillate Fuel Oil (4–1–72)
01.01352,03. Residual Fuel Oil (4–1–72)
01.01353. Residual Fuel Oils
01.01353,01. Standards for 1973 (6–28–78)
01.10353,02. Standards Beginning 1974 (6–28–78)
01.01354. Distillate Fuel Oil
01.01354,01. ASTM Grade 1 (4–1–72)
01.01354.02. ASTM Grade 2 (4–1–72)
01.01355. Coal (4–1–72)
01.01356—01.01400 (Reserved)
01.01401. Rules for Control of Fluoride Emissions (12–31–91)
01.01402. General Rules (12–31–91)
01.01402,01. Emission Limitations—Phosphate Fertilizer Plants (12–31–91)
01.01402,02. Monitoring, Testing, and Reporting Requirements (12–31–91)
01.01402,03. Source Specific Permits (12–31–91)
01.01402,04. Exemptions (12–31–91)
01.01403—01.01450 (Reserved)
01.01451. Rules for Control of Odors (12–31–91)
01.01452. General Rules
01.01452,01. General Restrictions (4–1–72)
01.01452,02. Restrictions on Rendering Plants (4–1–72)
01.01453—01.01500 (Reserved)
01.01501. Rules for Control of Incinerators (12–31–91)
01.01502. Emission Limits (4–1–72)
01.01503. Design Standards (4–1–72)
01.01504. Exceptions (12–31–91)
01.01505—01.01550 (Reserved)
01.01551. Rules for Control of Motor Vehicle Emissions (12–31–91)
01.01552. Pollution Control Devices (4–1–72)
01.01553. Visible Emission Standards (4–1–72)
01.01554—01.01600 (Reserved)
01.01601. Rules for Control of Hot-Mix Asphalt Plants (12–31–91)
01.01602. Emission Limits (12–31–91)
01.01603 (Reserved)
01.01604. Multiple Stacks (1–24–69)
01.01605. Fugitive Dust Control
01.01605,01. Fugitive Emission Controls (1–24–69)
01.01605,02. Plant Property Dust Controls (1–24–69)
01.01606—01.01650 (Reserved)
01.01651. Rules for Control of Kraft Pulping Mills (12–31–91)
01.01652. Statement of Policy
01.01652,01. Best Treatment and Control (5–16–71)

01.01652,02. Monitoring (5–16–71)
01.01652,03. Research (5–16–71)
01.01652,04. Available Technology Required (5–16–71)
01.01652,05. New Source Standards (5–16–71)
01.10653. General Rules (12–31–91)
01.01654. Recovery Furnace Standards (5–16–71)
01.01655. Recovery Furnace TRS Standards (5–16–71)
01.01656. Digester and Evaporator Standards (5–16–71)
01.01657. Recovery Furnace Particulate Standards (5–16–71)
01.01658. Lime Kiln Standards (5–16–71)
01.01659. Smelt Tank Standards (5–16–71)
01.01660. Monitoring and Reporting
01.01660,01. Continuous TRS Monitoring (5–16–71)
01.01660,02. Particulate Monitoring (5–16–71)
01.01660,03. Monitoring Program (12–31–91)
01.01660,04. Reporting (5–16–71)
01.01660,05. Miscellaneous Reports (5–16–71)
01.01661. Special Studies
01.01661,01. Areas to be Included (5–16–71)
01.01661,02. Additional Studies (5–16–71)
01.01662. Exceptions (12–31–91)
01.01663—01.01750 (Reserved)
01.01751. Rules for Control of Rendering Plants (12–31–91)
01.01752. Control of Cookers (4–1–72)
01.01753. Control of Expellers (4–1–72)
01.10754. Control of Plant Air (4–1–72)
01.01755. Exceptions (12–31–91)
01.01756—01.01800 (Reserved)
01.01801. Rules for Control of Sulfur Oxide Emissions From Sulfanic Acid Plants (12–31–91)
01.01802. General Restrictions (10–25–72)
01.01803. Monitoring and Testing (12–31–91)
01.01804. Compliance Schedule (12–31–91)
01.01805—01.01852 (Reserved)
01.01855 (Reserved)
01.01857—01.01950 (Reserved)
01.01969—01.01995 (Reserved)
01.01996. Administrative Provisions (12–31–91)
01.01998. Inclusive Gender and Number (12–31–91)
01.01999. Severability (12–31–91)
Appendix B Emission Inventory—Ada Country Carbon Monoxide NonAttainment Area (submitted 1/15/80)
Appendix G Permits—Silver Valley (submitted 1/15/80)
Appendix H Permits—Lewiston (submitted 12/4/80, 2/5/81)
Appendix J Permits—Pocatello (submitted 3/7/80)
Appendix K Permits—Soda Springs (submitted 1/15/80)
Beker Industries, 1973 Consent Order (40 CFR 52.670(c)(15)—SO2 Emission Limitation (submitted 7/28/75)
40 CFR part 52, subparts A and N

[58 FR 39448, July 23, 1993]

§52.680 [Reserved]

§52.681 Permits to construct and operating permits.

(a) Emission limitations and other provisions contained in Permits to Construct or Operating permits, issued by the State of Idaho Department of Health and Welfare in accordance with the federally-approved Rules and Regulations for the Control of Air Pollution in Idaho Manual sections 16.01.01002 Definitions, 16.01.01012 Procedures and Requirements for Permits to Construct and Operating Permits, 16.01.01014 Stack Heights and Dispersion Techniques, and 16.01.01101 Ambient Air Quality Standards and Area Classifications, except for Operating Permits authorizing the use of alternative emission limits (bubbles) under sections 16.01.01012,03.a(1) and 16.01.01012,09 or compliance schedule extensions under section 16.01.01012,03.d, shall be the applicable requirements of the federally-approved Idaho SIP (in lieu of any other provisions) for the purposes of section 113 of the Clean Air Act and shall be enforceable by EPA and by any person in the same manner as other requirements of the SIP.

(b) Operating Permits authorizing the use of alternative emission limits (bubbles) under sections 16.01.01012,03.a(1) and 16.01.01012,09, including the use of banked emission reduction credits pursuant to section 16.01.01012,10 in a bubble, and operating permits authorizing compliance schedule extensions under section 16.01.01012,03.d, must be submitted to EPA for approval as revisions to the Idaho SIP before they shall become the applicable requirements of the SIP.

[58 FR 39450, July 23, 1993]

§52.682 [Reserved]

§52.683 Significant deterioration of air quality.

(a) The Rules and Regulations for the Control of Air Pollution in Idaho Manual, specifically, sections 16.01.01002 Definitions, 16.01.01012 Procedures and Requirements for Permits to Construct and Operating Permits, 16.01.01014 Stack Heights and Dispersion Techniques, and 16.01.01101 Ambient Air

Quality Standards and Area Classifications, are approved as meeting the requirements of part C of the Clean Air Act for preventing significant deterioration of air quality.

(b) The requirements of sections 160 through 165 of the Clean Air Act are not met for Indian reservations since the plan does not include approvable procedures for preventing significant deterioration of air quality on Indian reservations. Therefore, the provisions of § 52.21 (b) through (w) are hereby incorporated and made part of the applicable plan for Indian reservations in the State of Idaho.

(c) The requirements of section 165 of the Clean Air Act are not met for sources subject to prevention of significant deterioration requirements prior to August 22, 1986, the effective date of EPA's approval of the rules cited in paragraph (a) of this section. Therefore, the provisions of § 52.21(b), (c), (d), and (h) through (w) are hereby incorporated and made part of the applicable plan for sources subject to § 52.21 prior to August 22, 1986.

[58 FR 39450, July 23, 1993]

§ 52.684–52.689 [Reserved]

§ 52.690 Visibility protection.

(a) The requirements of section 169A of the Clean Air Act are not met, because the plan does not include approvable procedures for protection of visibility in mandatory Class I Federal areas.

(b) Regulation for visibility monitoring. The provisions of § 52.26 are hereby incorporated and made a part of the applicable plan for the State of Idaho.

(c) *Long-term strategy*. The provisions of § 52.29 are hereby incorporated and made part of the applicable plan for the State of Idaho.

[50 FR 28553, July 12, 1985; 51 FR 23759, July 1, 1986, as amended at 52 FR 45137, Nov. 24, 1987]

§ 52.691 Extensions.

The Administrator, by authority delegated under section 188(d) of the Clean Air Act, as amended in 1990, hereby extends for one year (until December 31, 1995) the attainment date for the Power-Bannock Counties PM–10 nonattainment area and the Sandpoint PM–10 nonattainment area.

[61 FR 20732, May 8, 1996]

Subpart O—Illinois

§ 52.719 Identification of plan—Conditional approval.

The plan revision commitments listed in paragraph (a) of this section were submitted on the date specified.

(a) On May 15, 1992, Illinois submitted a part D particulate matter (PM) nonattainment area plan for the Lake Calumet, McCook, and Granite City moderate nonattainment areas. This plan included control measures adopted in a final opinion and order of the Illinois Pollution Control Board, on April 9, 1992, in proceeding R91–22. The USEPA is conditionally approving the State's plan, contingent on fulfillment of the State's commitment to meet 5 requirements by November 20, 1995. The first requirement is for the State to adopt and submit additional enforceable control measures, if necessary, that will achieve attainment. The second requirement is for the State to submit a complete and accurate emissions inventory (including corrected emissions estimates, as well as any new control measures which may be needed) and an acceptable modeled attainment demonstration. The third requirement is for the State to impose an opacity limit for coke oven combustion stacks which is reflective of their mass emission limits. The fourth requirement is for the State to provide an appropriate regulation for the electric arc furnaces at American Steel Foundries. The fifth requirement is for the State to correct the following three other enforcement concerns: First, section 212.107, Measurement Methods for Visible Emissions, states that Method 22 should be used for ''detection of visible emissions''. This could be misinterpreted as requiring use of Method 22 for sources subject to opacity limits as well as sources subject to limits on detectability of visible emissions. USEPA recommends revising the language of the rule to state that ''for both process emission sources and fugitive particulate matter sources, a determination as to the presence or absence of visible emissions shall be in accordance with

Method 22''. Second, measurement methods for opacity, visible emissions, and ''PM'' are in section 212.110, and in separate sections 212.107, 212.108, and 212.109. The measurement methods in these sections are not always consistent with each other. USEPA recommends that the measurement methods in 212.107, 212.108, and 212.109 be integrated with section 212.110. Third, several of the submitted rules contain language which exempts sources with no visible emissions from mass emissions limits. It is USEPA's understanding that the State intends for these exemptions to apply to small, well-controlled sources. However, the way the exemptions are worded, they could be misinterpreted to exclude many other sources from mass emissions limits. The rules containing these exemptions need to be clearer about exactly what sources are to be exempt, and when. If the State fails to meet any portion of its commitment by the date listed above, the USEPA's conditional approval will automatically become a limited approval/disapproval without further regulatory action.

(1) Incorporation by reference.

(i) Illinois Administrative Code Title 35: Environmental Protection, Subtitle B: Air Pollution, Chapter 1: Pollution Control Board, Subchapter c: Emission Standards and Limitations for Stationary Sources, Part 211:

Definitions and General Provisions, Subpart A: General Provisions, Section 211.101. Adopted at 16 *Illinois Register* 7656, effective May 1, 1992. (ii) Illinois Administrative Code Title 35: Environmental Protection, Subtitle B: Air Pollution, Chapter 1: Pollution Control Board, Subchapter c: Emission Standards and Limitations for Stationary Sources, Part 212: Visible and Particulate Matter Emissions, Subpart A: General, Sections 212.107, 212.108, 212.109, 212.110, 212.113; Subpart E: Particulate Matter Emissions from Fuel Combustion Sources, Section 212.210; Subpart K: Fugitive Particulate Matter, Sections 212.302, 212.309, 212.316; Subpart L: Particulate Matter from Process Emission Sources, Section 212.324; Subpart N: Food Manufacturing, Section 212.362; Subpart Q: Stone, Clay, Glass and Concrete Manufacturing, Section 212.425; Subpart R: Primary and Fabricated Metal Products and Machinery Manufacture, Section 212.458; Subpart S: Agriculture, Section 212.464; Section 212 Illustration D: McCook Vicinity Map, Illustration E: Lake Calumet Vicinity Map, and Illustration F: Granite City Vicinity Map. Adopted at 16 *Illinois Register* 7880, effective May 11, 1992.

(b) [Reserved]

[59 FR 59656, Nov. 18, 1994]

§52.720 Identification of plan.

(a) Title of plan: ''State of Illinois Air Pollution Implementation Plan.''

(b) The plan was officially submitted on January 31, 1972.

(c) The plan revision listed below were submitted on the dates specified.

(1) The role of the City of Chicago as a local agent was defined in a letter from the State Environmental Protection Agency on March 13, 1972.

(2) Copies of the Illinois Pollution Control Board Regulations, Chapter 2, Parts I, II and III were submitted May 4, 1972, by the Governor.

(3) A document describing the role of the Chicago Department of Environmental Control was submitted July 28, 1972, by the State Environmental Protection Agency.

(4) Copies of the revisions to the State air episode regulations were submitted on August 29, 1972, by the Governor.

(5) Compliance schedules submitted on March 13, 1973, by the Pollution Control Board.

(6) Compliance schedules submitted on April 3, 1973, by the Pollution Control Board.

(7) Transportation control plan submitted on April 17, 1973, by the Pollution Control Board.

(8) Compliance schedules submitted on May 3, 1973, by the Pollution Control Board.

(9) Compliance schedules submitted on June 15, 1973, by the Pollution Control Board.

(10) Compliance schedules submitted on August 7, 1973, by the Pollution Control Board.

(11) Information concerning the coal ban in the Chicago area was submitted on October 22, 1973, by Governor Walker.

(12) On July 22, 1976, the Director of the Illinois Environmental Protection Agency submitted revised emergency episode regulations.

(13) On November 29, 1977, the Director of the Illinois Environmental Protection Agency submitted grain handling and drying emission limitations as revisions to Rule 203.

(14) Revision consisting of an Illinois Pollution Control Board Order issued on July 20, 1978 to Commonwealth Edison Company, Christian County, Illinois and submitted on August 14, 1978 by the Illinois Environmental Protection Agency.

(15) Revision consisting of an Illinois Pollution Control Board Order issued to Shell Oil Company's Wood River refinery on December 14, 1978 by the Illinois Environmental Protection Agency.

(16) On April 4, 1979, the State submitted its draft nonattainment area plan for all areas designated nonattainment as of March 3, 1978 and as revised on October 5, 1978. This submittal contained a request for extensions of the statutory attainment deadline for CO and 03. The submittal also included a vehicle emission inspection and maintenance program and a new source review plan. Although the State submittal also included the following provisions, U.S. EPA is taking no action to include them in the federally approved SIP at this time: the portions of Rules 101, 103 and 105 relating to the provisions addressing malfunctions, general requirements of the Clean Air Act which are not Part D requirements, and the provisions covering open burning, mobile source emission standards, diesel locomotive emission standards, sulfur dioxide emissions for certain fuel combustion sources located outside major metropolitan areas, compliance dates for organic emission limitations, particulate emissions from low carbon waste incinerators, and adoption of Federal New Source Performance Standards. In addition, U.S. EPA is not rulemaking at this time on those portions of the following rules which contain specified changes made between the publication of the notice of proposed rulemaking and the final rulemaking action:

(i)—(iii) [Reserved]

(iv) The new materials in Section 4.11 of the Rules for Issuance of Permits to New or Modified Air Pollution Sources;

(v) The addition of a definition of ''reconstruction'' in Section 4.7 of the Rules for Issuance of Permits;

(vi) The procedure allowing external offsets contained in Section 10 of the Rules for Issuance of Permits.

(17) On August 29, 1979, the State submitted additional information and clarification for the nonattainment area plan in response to USEPA's July 2, 1979 notice of proposed rulemaking.

(18) On September 20, 1979, the State submitted a summary of public hearing comments on the plan.

(19) On October 30, 1979, the State submitted copies of Illinois Pollution Control Board final orders for control of VOC emissions from stationary sources (Rule 205), sources of fugitive particulate (Rule 203(f)), and particulate emissions from iron and steel sources (Rule 203(d)).

(20) On December 20, 1979, the State submitted a letter containing the dates that most of the regulatory and nonregulatory portions of the nonattainment area plans were finally adopted by the Illinois Pollution Control Board. Rule 205 containing RACT controls for stationary sources of VOC was effective in the State on July 18, 1979. Rule 203(f) governing fugitive dust emissions was effective in the State on September 18, 1979.

(21) On January 25, 1980, the State submitted a copy of finally enacted ''Rules for the Issuance of Permits to New or Modified Air Pollution Sources Affecting Nonattainment Areas.'' Sections 5.1(a)(2)(ii) and 5.1(a)(2)(iii) of these rules were reserved by the State. The effective date of these Rules was January 16, 1980.

(22) On March 21, 1979, the State of Illinois submitted to the USEPA revised regulations for control of sulfur dioxide emissions. On September 19, 1979, the State submitted additional information on these revised regulations to the USEPA.

(23) On January 17, 1980 and on February 7, 1980 the State submitted further information and clarifications to Rule 204.

(24) On September 19, 1979, the State of Illinois submitted a revision to Rule

204(e)(1) for the Commonwealth Edison Company. The revision approves an emission limitation of 105,162 lbs SO_2/hour for the Kincaid Generating Station in Christian County, Illinois.

(25) On April 30, 1980, the State submitted revisions to the transportation control plan for northeast Illinois (Chicago).

(26) On December 20, 1979, the State of Illinois submitted a revision to provide for modification of the existing air quality surveillance network.

(27) On January 8, 1980, the State submitted an Opinion and Final Order of the Pollution Control Board (dated November 19, 1979) which deletes Rule 206(d) of Chapter 2 from the Illinois Air Pollution Control Regulations.

(28) On September 18, 1979, the State submitted a Final Order of the Pollution Control Board (dated April 12, 1979) which amended Rule 205(g)(1) of Chapter 2 of the Illinois Air Pollution Control Regulations.

(29) On July 21, 1981, the State submitted Volume 9 Lead, of the Illinois State Implementation Plan for Air Pollution Control for incorporation in the Illinois State Implementation Plan. This plan covers all areas in Illinois except for Granite City in the St. Louis Interstate AQCR.

(30) On July 29, 1980, the State submitted a May 29, 1980, Opinion and Order of the Illinois Pollution Control Board granting a variance from the requirements Rule 203(d)(8)(B) of Chapter 2 of the Air Pollution Control Regulations to Continental Grain Company's grain elevator located in Crossville, White County, Illinois. This variance expired July 1, 1980.

(31) On April 4, 1980, the State submitted a November 29, 1979, Opinion and Order of the Illinois Pollution Control Board (IPCB) and Supplementary IPCB Orders dated January 24, 1980, and February 7, 1980. These Orders grant 13 Caterpillar Tractor Company boilers a variance from the requirements of IPCB (A), Rule 203(g)(1)(C)(i) and/or Rule 203(g)(1)(D) which regulate particulate emissions from new and existing sources. No action is taken at this time on variance provisions for Mapleton facility boilers #2, 3, 4, and 5. This variance expired on October 8, 1981.

(32) On August 31, 1981, the State of Illinois submitted a revision to the Illinois State Implementation Plan in the form of a July 9, 1981, Order of the Illinois Pollution Control Board (R–77–15). This Order creates Rule 204(c)(1)(E) which establishes sulfur dioxide (SO_2) emission limitations of 5.5 lbs/SO/MMBTU for solid fuel combustion sources having actual heat input not greater than 250 million BTU's per hour owned or operated by Bemis Company, Inc., Celotex Corporation or Sherex Corporation. On November 17, 1981, the State submitted additional information in support of this revision.

(33) On August 20, 1980, and March 20, 1981, the State submitted additional information on the transportation control plans for the Northeast Illinois (Chicago) Area.

(34) On October 15, 1980, the State submitted additional information on the transportation control plans for the Peoria Metropolitan Area.

(35) On April 1, 1981, the State submitted additional information on the transportation control plans for the St. Louis Metropolitan (Illinois) Area.

(36) On December 10, 1980, the State submitted a July 24, 1980, Opinion and Order of the Illinois Pollution Control Board and a September 18, 1980, Order of the Board granting Bunge Corporation's Cairo, Illinois soybean processing plant and grain elevator variance from Illinois Pollution Control Board's particulate emission standards under Rules 203(g)(1)(D) and 103(b)(1) of Chapter 2 of the Air Pollution Control Regulations through October 15, 1981.

(37) On July 17, 1980, the State submitted an April 3, 1980, Opinion and Order of the Illinois Pollution Control Board adopting a December 13, 1979, Proposed Opinion and Order of the Board which exempted certain small explosive waste incinerators from the requirements of Rule 203(e) Particulate Emission Standards and Limitations for incinerators and Rule 206(b) Carbon Monoxide Emissions Standards and Limitations for incinerators.

(38) On May 10, 1982, the State submitted a February 4, 1982, Illinois Pollution Control Board Opinion and Order (PCB 81–184) granting a variance from the requirements of Rules 205(m)(1)(B) and 204(n)(1)(G) of Chapter

2 of the Air Pollution Control Regulations to the Lyon Metal Products, Incorporated, Montgomery, Illinois facility. This variance expires on May 31, 1985.

(39) On October 1, 1981, the State submitted a report in satisfaction of the Total Suspended Particulate Control Strategy approval condition in which the State agreed to conduct an analysis of the potential air quality impact from storage piles with uncontrolled emissions of less than 50 tons per year, to submit the results of any analysis to EPA, to submit any necessary regulations to the Illinois Pollution Control Board, and promulgate and submit any necessary regulations to EPA. This report concluded that no further regulations were needed.

(40) EPA Study Volatile Organic Compound Emissions from Solvent Cleaning Operations in the State of Illinois (EPA 905/4–80–008) was prepared to satisfy the Ozone Control Strategy approval condition in which the State agreed to conduct a study to demonstrate that the three pound per hour, 15 pound per day exemption for solvent metal cleaners contained in Rule 205(k) represents RACT, to submit the results of the study to EPA, to submit the necessary regulations to the Illinois Pollution Control Board and promulgate and submit any necessary regulations to EPA. The State reviewed this report and in a February 11, 1981, letter to EPA noted their agreement with the findings of the report and indicated that because there was no need for further regulations, this condition is satisfied.

(41) On December 7, 1981, the State submitted a October 8, 1981, Illinois Pollution Control Board Final Order (R79–11). This Final Order amends Rule 203(g)(1) by adding subsection (E).

(42) On January 4, 1983, the State submitted a revision to the Illinois State Implementation Plan in the form of an October 27, 1982, Illinois Pollution Control Board (IPCB) Opinion and Order (PCB 82–88). This Opinion and Order grants a variance from the requirements of Rule 203(a) of Chapter 2 of the Air Pollution Control Regulations to a proposed fluidized bed combustion boiler at B.F. Goodrich's Henry County, Illinois facility. This variance continues until October 1, 1987, or until the facility is no longer subject to Rule 206(a), whichever comes first.

(43) On July 29, 1982, the State submitted a revision to the Illinois State Implementation Plan in the form of a May 28, 1981, Illinois Pollution Control Board (IPCB) Final Opinion of the Board (R78–17). This Final Opinion deletes Rule 204(c)(1)(D) and the reference to it in Rule 204(h) from the IPCB Air Pollution Control Regulations.

(44) On March 17, 1983, the Illinois Environmental Protection Agency (IEPA) submitted a revision to its ozone SIP for Chrysler's Belvidere facility. The revision request contains an alternative compliance time schedule with interim emission limitations which is in the form of a variance for prime coating and prime surface coating operations. Final compliance is changed from December 31, 1982 to December 31, 1987.

(45) On August 19, 1983, the State of Illinois submitted a revision to the Illinois State Implementation Plan in the form of a July 26, 1983, Order of the Illinois Pollution Control Board (R82–12). This Order creates Rule 313 which establishes 1.5 micrograms per cubic meter, maximum arithmetic mean, averaged over a calendar quarter as the State's ambient air quality standard for lead. The Board also adopted, as part of Rule 313, a measurement method for determining compliance with the standard.

(46) On August 15, 1983, the Illinois Environmental Protection Agency submitted a May 19, 1983, Opinion and Order (PCB–82–147) of the Illinois Pollution Control Board (IPCB) granting Del Monte Corporation's Can Manufacturing Plant No. 115 located in Rochelle, Ogle County, Illinois, a variance from the IPCB volatile organic compound emission standards under Rule 205(n)(1)(B)(i) and Rule 205(n)(1)(B)(vi) of Chapter 2: Air Pollution Regulations. The variance expires on December 31, 1984.

(47) On March 24, 1983, and May 3, 1983, the State submitted information that indicated that a February 21, 1980 (45 FR 11472), conditional approval of the incorporation of a revised Part D sulfur dioxide control strategy into the Illinois State Implementation Plan has

been satisfied for Cincinnati, Pekin and Elm Grove Townships in Tazewell County and for Logan and Limestone Townships in Peoria County. This approval condition required that the SIP include a reanalysis of the Pekin, Illinois area; a submittal of the analysis results to USEPA; the proposal of any necessary regulations to the Illinois Pollution Control Board necessary to insure attainment and maintenance of the sulfur dioxide standard; and the promulgation of any necessary regulations. Any promulgated regulations must be submitted to USEPA.

(48)—(49) [Reserved]

(50) On May 3, 1983, the State requested that USEPA incorporate IPCB Rule 204 (f)(2) into the Illinois SIP. Rule 204(f)(2) was adopted by Illinois as part of a February 24, 1983, Order of the Board (R80–22). USEPA approves the incorporation of Rule 204(f)(2) as it pertains to Pekin Energy, a source in the Peoria major metropolitan area.

(51) On January 30, 1984, the State submitted Rule 204(f) as contained in a February 24, 1983, Order of the IPCB (R80–22) as it applies to sources in the Peoria Major Metropolitan area for incorporation in the SIP. USEPA approves the incorporation of Rule 204(f) into the SIP as it applies to all sources in Peoria and Tazewell Counties except Caterpillar Tractor Mapleton and East Peoria Plants. No action is taken on Rule 204(f) as it applies to the Chicago or St. Louis (Illinois—portion) Major Metropolitan Areas or on Rule 204(f) (1) and (2).

(52) [Reserved]

(53) On September 30, 1983, the State submitted a revision to the Illinois State Implementation Plan in the form of a lead plan to assure attainment and maintenance of the NAAQS in the Granite City area. The Illinois plan includes a discussion of air quality data measured since 1978, an emission inventory of three source categories capable of emitting lead, atmospheric modeling analyses and proposed necessary control strategies. On March 19, 1984, the State submitted five consent decrees entered by the State of Illinois with the Circuit Court for the Third Judicial Circuit of Madison County and filed March 16, 1984, for incorporation in the lead plan. These include *People of the State of Illinois* vs. *Taracorp, Inc.; People of the State of Illinois* vs. *St. Louis Lead Recyclers; People of the State of Illinois* vs. *First Granite City National Bank; People of the State of Illinois,* vs. *Stackorp Inc.;* and *People of the State of Illinois* vs. *B.V. and G.V. Transport Company*.

(54) [Reserved]

(55) On November 14, 1985, the State of Illinois submitted a negative declaration for natural gas/gasoline processing plants.

(i) Incorporation by reference.

(A) Letter dated November 14, 1985, from Michael J. Hayes, Manager, Division of Air Pollution Control, Illinois Environmental Protection Agency.

(56) On June 19, 1984, the State submitted Illinois Environmental Protection Agency Rule 252 entitled, ''Rules for Governing Public Participation in the Air Pollution Permit Program for Major Source in Nonattainment Areas.''

(i) Incorporation by reference.

(A) Illinois Environmental Protection Agency Rule 252 entitled, ''Rule for Governing Public Participation in the Air Pollution Permit Program for Major Sources in Nonattainment Areas,'' published on June 8, 1984.

(57)—(60) [Reserved]

(61) On March 15, 1984 and June 14, 1984 the Illinois Environmental Protection Agency submitted commitments for satisfying several outstanding conditions to the sulfur dioxide [52.724(a)(1)] State Implementation Plan.

(62) On January 16, 1985, the Illinois Environmental Protection Agency submitted a variance from Illinois Rule 206(a).

(i) Incorporation by reference.

(A) June 14, 1984, Opinion and Order of the Illinois Pollution Control Board (IPCB), PCB 84–19. This is a variance from Illinois Rule 206(a) until June 14, 1987, for CO emissions from a fluidized bed combustion boiler at Midwest Solvents Company's facility in Tazewell County, Illinois.

(63) On February 6, 1985, the Illinois Environmental Protection Agency (IEPA) submitted a site-specific revision to its total suspended particulates State Implementation Plan for Villa

Grove's ''Dump and Boot Pit'' emissions in Champaign County, Illinois.

(i) Incorporation by reference.

(A) Illinois Pollution Control Board, Opinion and Order of the Board, PCB 84–53, Villa Grove's ''Dump and Boot Pit'' site-specific TSP revision. This revision extends the compliance date for control requirements on these emissions until September 1, 1987, and was adopted on July 14, 1984.

(64) On May 13, 1985, the Illinois Environmental Protection Agency (IEPA) submitted a variance from Illinois Rule 202(b) for a Brule pathological waste incinerator (BPWI) at NPWC's facility located at the Great Lakes Naval Base, Great Lakes, Shields Township, Illinois, as a revision to its TSP SIP. Shields Township is an attainment area for both the primary and secondary national ambient air quality standards (NAAQS) for TSP.

(i) Incorporation by reference.

(A) Opinion and Order of the Illinois Pollution Control Board 84–156 adopted on March 22, 1985.

(65) Submitted from the Illinois Environmental Protection Agency (IEPA) dated July 22, 1985, requesting an extended compliance schedule for Precision Coatings Incorporated (PCI) coating Machine Number 2.

(i) Incorporation by reference.

(A) Illinois Pollution Control Board Opinion and Order of the Board, PCB 84–117, which was adopted on February 20, 1985, and a modification to PCB 84–117 which was adopted on April 14, 1985.

(66) On March 27, 1985, the Illinois Environmental Protection Agency (IEPA) submitted a site-specific revision to its Carbon Monoxide State Implementation Plan for Anderson Clayton Foods, Inc. (ACF), a variance from 35 Illinois Administrative Code (IAC) 216.121 which governs Carbon Monoxide emissions from the Fluidized Bed Combuster retrofitted boiler at ACF's Jacksonville, Illinois facility. IAC 216.121 was incorporated in the Illinois SIP on May 31, 1972 (37 FR 10862), as Illinois Pollution Control Board Rule 206(a).

(i) Incorporation by reference.

(A) Illinois Pollution Control Board Opinion and Order of the Board, PCB 84–147, which was adopted on January 24, 1985.

(67) On April 18, 1983, the State of Illinois submitted a 0.60 lb TSP/MMBTU emission limit for the City of Rochelle Municipal Steam Power Plant. On May 24, 1985, it submitted a revised modeling analysis.

(i) Incorporation by reference.

Illinois Pollution Control Board Order (R78–15), Rule 203(g)(1)(C)(iii) which is dated February 24, 1983.

(68) On May 8, 1985, the Illinois Environmental Protection Agency submitted a variance until December 31, 1987, from Illinois Rule 205(n)(1)(b)(v) and Rule 205(n)(1)(b)(vi), for American Can Corporation's Hoopeston, Illinois facility in the form of a January 24, 1985, Opinion and Order of the Illinois Pollution Control Board (PCB 84–106).

(i) Incorporation by reference. (A) A January 24, 1985, Opinion and Order of the Illinois Pollution Control Board (ICPB), PCB 84–106. This is a variance until December 31, 1987, for the coating reformulation programs at American Can Corporation's Hoopeston facility located in Hoopeston, Illinois.

(69) On January 28, 1983, the Illinois Environmental Protection Agency submitted a December 30, 1982, Illinois Pollution Control Board Order (R80–5). Illinois Pollution Control Board Rules 205(l) (4) through (10), 205(t) and 205(u) are approved.

(i) Incorporation by reference. (A) Ilinois Pollution Control Board Rules 205(l)(4) through (10), 205(t) and 205(u) as contained in December 30, 1982, Illinois Pollution Control Board Order R80–5.

(ii) Additional material—none.

(70) On February 13, 1986, the Illinois Environmental Protection Agency (IEPA) submitted a revision to its ozone SIP for the Fedders-USA's facility located in Effingham, Effingham County, Illinois. It grants Fedders-USA a compliance date extension for control requirements from October 1, 1982, to April 1, 1986, and provides for a legally enforceable compliance program.

(i) Incorporation by reference.

(A) A January 9, 1986, Opinion and Order of the Illinois Pollution Control Board (IPCB), PCB 83–47.

(71) On October 20, 1983, the Illinois Environmental Protection Agency submitted a site-specific revision to Illinois' sulfur dioxide plan for Illinois

Power Company's Baldwin Power Station. The revised SO_2 emission limitations are 101,966 lbs/hour, in the aggregate, and 6 lbs/MMBTU.

(i) Incorporation by reference. (A) Emission limits within Paragraph 1 of Illinois Pollution Control Board Final Order PCB 79–7, which was adopted September 8, 1983.

(72) [Reserved]

(73) On May 6, 1985, the Illinois Environmental Protection Agency, requested an extended compliance schedule for National Can Corporation's Rockford facility.

(i) Incorporation by reference.

(A) Illinois Pollution Control Board, April 1, 1982, Opinion and Order of the Board, PCB 81–189 and a January 24, 1985, Opinion and Order PCB 84–108. These orders grant National Can Corporation (Rockford Plant) a variance from the existing VOC SIP requirements from December 31, 1982, until December 31, 1983, and from December 31, 1983, until December 31, 1985, respectively.

(74) On October 30, 1986, the Illinois Environmental Protection Agency submitted a September 25, 1986, Final Order of the Illinois Pollution Control Board R85–33 revises the State's coke oven pushing and charging rules and recodifies some related rules.

(i) Incorporation by reference. (A) Order of the Illinois Pollution Control Board R85–33, which was adopted September 25, 1986.

(75)—(77) [Reserved]

(78) On January 28, 1983, June 25, 1987, August 21, 1987, September 28, 1987, October 2, 1987, December 22, 1987, January 8, 1988, March 29, 1988, and May 2, 1988 the State submitted stationary source control measures for incorporation in the ozone plan.

(i) Incorporation by reference. (A) The following sections of title 35, Environmental Protection; subtitle B: Air Pollution; Chapter 1: Pollution Control Board of the Illinois Administrative Code, (June 1989): section 211.122 (definitions of bead-dipping; component; dry cleaning facility; external floating roof; gas service; green tire spraying; green tires; heavy liquid; liquid mounted seal; liquid service; pneumatic rubber tire manufacture; refinery unit, process unit, or unit; tread end cementing; undertread cementing; valves not externally regulated; vapor collection system; vapor mounted primary seal; volatile organic liquid; and volatile organic material) of subpart B (part 211); section 215.104 (definitions of continuous process; in vacuum service; material recovery section; open-ended valve; polystyrene plant; polystyrene resin; repaired; styrene devolatilizer unit; and styrene recovery unit) of subpart A (part 215); sections 215.124, 215.125, and 215.126 of subpart B (part 215); section 215.205 of subpart F (part 215); sections 215.240, 215.241, and 215.249 of subpart H (part 215); section 215.408 of subpart P (part 215); sections 215.420 through 215.431, 215.433, 215.434, 215.435, 215.437, and 215.438, all of subpart Q (part 215); section 215.453 of subpart R (part 215); sections 215.465 and 215.466 of subpart S (part 215); sections 215.520, 215.521, 215.525, 215.526, and 215.527 all of subpart V (part 215); sections 215.582, 215,583, and 215.584 of subpart Y (part 215); sections 215.607 through 215.613 of subpart Z (part 215); and sectons 215.875, 215.877, 215.879, 215.881, 215.883, and 215.886 all of subpart BB (part 215) are approved.

(ii) Additional material.

(79) On March 20, 1986, November 17, 1986, and July 1, 1987, Illinois submitted its vehicle inspection and maintenance plan for the Chicago and East St. Louis areas.

(i) *Incorporation by reference.* (A) Title 35: Environmental Protection, Subtitle B: Air Pollution, Chapter II: Environmental Protection Agency, Part 276, Procedures To Be Followed in the Performance of Annual Inspections of Motor Vehicle Exhaust Emissions, Adopted at 10 Illinois Register 13954, effective August 13, 1986.

(ii) *Additional material.* (A) ''Technical Procedures Memorandum—Enforcement'' between the Illinois Secretary of State and the Illinois Environmental Protection Agency, as submitted by Michael J. Hayes, Manager, Division of Air Pollution Control on July 1, 1987.

(80) [Reserved]

(81) On April 6, 1990, and May 4, 1990, Illinois submitted a regulation which reduced the maximum allowable volatility for gasoline sold in Illinois during July and August 1990 to 9.5 pounds per square inch.

(i) Incorporation by reference

(A) Title 35: Environmental protection, Subtitle B: Air pollution, Chapter I: Pollution control board, Part 215, Organic material emission standards and limitations, §215.585, Gasoline volatility standards, Adopted at 14 Illinois register *6434*, effective April 11, 1990.

(82)—(83) [Reserved]

(84) On September 18, 1991, and November 18, 1991, the State submitted documents intended to satisfy federal requirements for an operating permit program which can issue federally enforceable operating permits.

(i) Incorporation in Reference.

(A) Public Act 87–555, an Act to amend the Environmental Protection Act by changing section 9.1, effective September 17, 1991. (Ch. 111 1/2, par. 1009.1) par. 1009.1(a), (b), (c), (d) and (f).

(85) On March 24, 1988, the State submitted rules for issuance of construction permits to new and modified air pollution sources located in or affecting nonattainment areas (New Source Review rules).

(i) Incorporation by reference.

(A) Illinois Administrative Code, Title 35 Environmental Protection, Subtitle B: Air Pollution, Chapter 1: Pollution Control Board, Part 203: Major Stationary Sources.

(86) On February 8, 1991, the State submitted revisions to its sulfur dioxide measurement methodology.

(i) *Incorporation by reference.* (A) Title 35: Environmental Protection, Subtitle B: Air Pollution, Chapter 1: Pollution Control Board, Part 214 Sulfur Limitations, Subpart A: General Provisions, section 214.101 Measurement Methods. Adopted December 20, 1990, effective January 15, 1991.

(87) On March 13, 1985, the State submitted revisions to its sulfur dioxide limitations.

(i) Incorporation by reference.

(A) Title 35: Environmental Protection, Subtitle B: Air Pollution, Chapter 1: Pollution Control Board, Part 214 Sulfur Limitations, Subpart C: Existing Solid Fuel Combustion Emission Sources, Section 214.141 Sources Located in Metropolitan Areas, through paragraph (a) only, effective March 28, 1983; Subpart F: Alternative Standards for Sources Inside Metropolitan Areas, Section 214.201 Alternative Standards for Sources in Metropolitan Areas and Section 214.202 Dispersion Enhancement Techniques, effective March 28, 1983.

(88) On June 9, 1986, the State submitted revisions to its sulfur dioxide limitations in the form of a April 24, 1986, opinion and order of the Illinois Pollution Board in proceeding R84–28.

(i) Incorporation by reference.

(A) Title 35: Environmental Protection, Subtitle B: Air Pollution Chapter 1: Pollution Control Board Part 214 Sulfur Limitations, Subpart C: Existing Solid Fuel Combustion Emission Sources, §214.141 Sources Located in Metropolitan Areas, paragraphs b), c) and d), and Subpart X: Utilities, §214.560 Scope and §214.561 E.D. Edwards Electric Generating Station effective May 20, 1986.

(89) On March 17, 1989, and August 28, 1990, the State of Illinois submitted a revision to the Illinois State Implementation Plan. The revision is contained in subpart J, §201.281 and subpart L, §§201.401-.408 of part 210 of title 35 of the Illinois Administrative Code. This revision provides a legally enforceable procedure for continuously monitoring and recording emissions to determine the status of compliance of certain stationary source categories and complies with 40 CFR 51.214 and part 51, appendix P. The rules were adopted by the Illinois Pollution Control Board on December 15, 1988, published (13 Ill. Reg. 2066) and became effective February 3, 1989. The rules were corrected for an omission, published on November 15, 1989, (13 Ill Reg. 19444), and became effective December 5, 1989. In a November 18, 1991, letter from Bharat Mathur, then Manager, Division of Air Pollution Control, Illinois Environmental Protection Agency (IEPA) to Stephen Rothblatt, Chief, Regulation Development Branch, Region 5, USEPA, Illinois committed to notify USEPA of any pending construction or operating permit application during the 30 day public comment period which is part of Illinois' permit issuance process (Section 203.150). This commitment is part of the administrative record of USEPA's approval of the Illinois' operating permit program for the purpose of issuing federally enforceable operating permits at 40 CFR

52.720 (c) (84) and 52.737 on December 17, 1992 (57 FR 59928). USEPA may deem a permit not federally enforceable if monitoring provisions do not comply with the requirements of 40 CFR 51.214, part 51, appendix P or §51.165.

(i) Incorporation by reference.

(A) Title 35: Environmental Protection; Subtitle B: Air Pollution; Chapter I: Pollution Control Board; Subchapter a: Permits and General Provisions; Part 201: Permits and General Provisions, Subpart J: Monitoring and Testing, Section 201.281; and Subpart L: Continuous Monitoring, Sections 201.401 through 201.408, adopted at Ill. Reg. 2066, effective February 3, 1989.

(90) On June 11, 1991, Illinois submitted regulations concerning the emission of volatile organic compounds from pharmaceutical manufacturing.

(i) Incorporation by reference.

(A) Title 35 of the Illinois Administrative Code: Environmental Protection, Subtitle B: Air Pollution, Chapter 1: Pollution Control Board, Subchapter C: Emissions Standards and Limitations for Stationary Sources, Part 215: Organic Material Emission Standards and Limitations, Subpart T: Pharmaceutical Manufacturing, Subpart A: General Provisions: Amendments to sections 215.102 and 215.105 and Creation of section 215.108. Adopted at 15 ILLINOIS REGISTER 80 18, effective May 14, 1991.

(B) Title 35 of the Illinois Administrative Code: Environmental Protection, Subtitle B: Air Pollution, Chapter 1: Pollution Control Board, Subchapter C: Emissions Standards and Limitations for Stationary Sources, Part 211: Definitions and General Provisions, Subpart B: Definitions. Adopted at 15 ILLINOIS REGISTER 79 01, effective May 14, 1991.

(91) [Reserved]

(92) On June 4, 1992, the State submitted particulate matter regulations adopted as part of Pollution Control Board Proceeding R91–35. These regulations concern particulate matter ambient limits and episode regulations.

(i) Incorporation by reference. Illinois Administrative Code, Title 35: Environmental Protection, Subtitle B: Air Pollution, Chapter I: Pollution Control Board

(A) Part 212 Visible and Particulate Matter Emissions: Section 212.113 Incorporations by Reference; section 212.424 Fugitive Particulate Matter Control for the Portland Cement Manufacturing Plant and Associated Quarry Operations located in LaSalle County, South of the Illinois River; section 212.443 Coke Plants; section 212.445 Blast Furnace Cast Houses; adopted at 16 Illinois Register 8204, effective May 15, 1992.

(B) Part 243 Air Quality Standards: Section 243.108 Incorporations by Reference; section 243.120 PM_{-10}; section 243.121 Repealed; adopted at 16 Illinois Register 8185, effective May 15, 1992.

(C) Part 244 Episodes: Section 244.101 Definitions; section 244.106 Monitoring; section 244.107 Determination of Areas Affected; section 244.121 Local Agency Responsibilities; section 244.161 Advisory Alert and Emergency Levels; section 244.162 Criteria for Declaring and Advisory; section 244.163 Criteria for Declaring a Yellow Alert; section 244.166 Criteria for Terminating Advisory, Alert and Emergency; section 244.167 Episode Stage Notification; section 244.168 Contents of Episode Stage Notification; section 244.169 Actions During Episode Stages Adopted; section 244 appendix D; adopted at 16 Illinois Register 8191, effective May 15, 1992.

(93) On September 30, 1992, the State submitted rules regulating volatile organic compound emissions from gasoline dispensing facilities' motor vehicle fuel operations.

(i) Incorporation by reference.

(A) Illinois Administrative Code, title 35 Environmental Protection, subtitle B: Air Pollution, chapter I: Pollution Control Board part 218: Organic Material Emission Standards and Limitations for the Chicago Area; subpart Y: Gasoline Distribution; §218.583 Gasoline Dispensing Facilities—Storage Tank Filling Operations, amended at 16 Illinois Register 13864 effective August 24, 1992, and; §218.586 Gasoline Dispensing Facilities—Motor Vehicle Fueling Operations, added at 16 Illinois Register 13864, effective August 24, 1992.

(B) [Reserved]

(ii) Additional materials.

(A) Stage II Vapor Recovery SIP Program Description dated September 29, 1992.

(94) On July 30, 1986, the State submitted particulate boiler rules intended to replace rule 203(g)(1) which was vacated by the Courts. No action is taken on § 212.209 because the variance which it authorized has expired. On July 22, 1988, the State submitted opacity rules intended to replace rule 202(b) which had been vacated by the Courts. Also on July 22, 1988, the State submitted Illinois Pollution Control Board procedural rules for considering Air Adjusted Standard Procedures.

(i) Incorporation by reference.

(A) Title 35: Environmental Protection, Illinois Administrative Code, Subtitle B: Air Pollution; Chapter 1: Pollution Control Board; part 212 Visible and Particulate Matter Emissions; subpart E: Particulate Matter Emission from Fuel Combustion Emission Sources; §§ 212.201, 212.202, 212.203 and 212.204. Amended or added at 10 Ill Reg. 12637, effective July 9, 1986.

(B) Title 35: Environmental Protection, Illinois Administrative Code, Subtitle B: Air Pollution; Chapter 1: Pollution Control Board; part 212 Visible and Particulate Matter Emissions; subpart B: Visible Emissions. Amended or added at 12 Ill. Reg 12492, effective July 13, 1988.

(C) Title 35: Environmental Protection, Illinois Administrative Code; Subtitle A: General Provisions; Chapter 1: Pollution Control Board; part 106: Hearings Pursuant to Specific Rules; subpart E: Air Adjusted Standards Procedures. Added at 12 Ill. Reg 12484, effective July 13, 1988.

(95) On October 16, 1991, and November 13, 1991, the State submitted particulate matter regulations adopted as part of Pollution Control Board Proceeding R91–6. These regulations concern particulate matter controls for LaSalle County, Illinois.

(i) Incorporation by reference. Illinois Administrative Code, Title 35: Environmental Protection, Subtitle B: Air Pollution, Chapter I: Pollution Control Board.

(A) The addition of definitions for ''Condensible PM–10'', ''PM–10'', ''Portland Cement Manufacturing Process Emission Source'', and the modification of the definition of ''Portland Cement Process'' to Part 211 Definitions and General Provisions: Section 211.122 Definitions; adopted at 15 Illinois Register 15673, effective October 14, 1991.

(B) Part 212 Visible and Particulate Matter Emissions: Section 212.110 Measurement Methods; the addition of an abbreviation for pounds per hour to Section 212.111 Abbreviations and Units; additions and deletions to Section 212.113 Incorporations by Reference including the addition and/or renumbering of paragraphs (a), (b), (c), (d), (e), and (h) and the deletion of paragraphs earlier numbered as (a) and (f); Section 212.423 Emission Limits for Portland Cement the Manufacturing Plant Located in LaSalle County, South of the Illinois River; adopted at 15 Illinois Register 15708, effective October 4, 1991.

(96) On November 12, 1992, the State of Illinois submitted a Small Business Stationary Source Technical and Environmental Assistance Program for incorporation in the Illinois State Implementation Plan as required by section 507 of the Clean Air Act Amendments of 1990. Included in the State's submittal were a program description, newly adopted enabling legislation including new subsection 20 of section 39.5 of the Environmental Protection Act, Public Act 87–1213, and new subsection 46.13(a) of the Civil Administrative Code, Public Act 87–1177, and a May 4, 1992, State of Illinois, Illinois Department of Commerce and Community Affairs (DCCA), Illinois Environmental Protection Agency (IEPA) Interagency Agreement defining the responsibilities of DCCA and IEPA in developing and implementing the Small Business Stationary Source Technical and Environmental Compliance Assistance Program (Program).

(i) *Incorporation by reference.* (A) Subsection 20 of section 39.5 of the Environmental Protection Act adopted as Public Act 87–1213 signed into law on September 26, 1992, and effective upon signature.

(B) Subsection 46.13(a) of the Civil Administrative Code adopted as Public Act 87–1177 signed into law on September 21, 1992, and effective upon signature.

(ii) *Other material.* (A) Program description.

(B) May 4, 1992, Interagency Agreement between DCCA and IEPA defining the responsibilities of each agency in developing and implementing the program.

(97) On October 12, 1992, and June 2, 1993, the State of Illinois submitted a requested revision to the Illinois State Implementation Plan (SIP) intended to satisfy the requirements of section 182(a)(3)(B) of the Clean Air Act as amended in 1990. Included were State rules establishing procedures for the annual reporting of emissions of volatile organic material (VOM) and oxides of nitrogen (NO_x) as well as other regulated air pollutants by stationary sources in ozone nonattainment areas. Also included was a June 2, 1993, commitment letter from the Illinois Environmental Protection Agency (IEPA) to fulfill the reporting requirements of the United States Environmental Protection Agency by performing the following tasks:

(i) Update the AIRS Facility Subsystem using the annual emissions report data. The 1992 data will be updated by December 31, 1993, and subsequent updates will be made by July 1st of each year.

(ii) Retain annual emissions reports for at least three (3) years.

(iii) Develop and submit Emissions Statement Status Reports (ESSR) on a quarterly basis each year until all applicable sources have submitted the required annual emissions reports. The report will show the total number of facilities from which emission statement data was requested, the number of facilities that met the provisions, and the number of facilities that failed to meet the provisions. Sources that are delinquent in submitting their emissions statements will be individually listed if they emit 500 tons per year or more of VOM or 2500 tons per year or more of NO_x. The report will also contain the emission data requested in Appendix F of the July 6, 1992, Draft Guidance on the Implementation of an Emission Statement Program.

(iv) All sources subject to the emission statement requirements must report, at a minimum, the information specified under subpart C of part 254 of chapter II of subtitle B of title 35 of the Illinois Administrative Code.

(A) Incorporation by reference. Illinois Administrative Code, Title 35: Environmental Protection, Subtitle B: Air Pollution, Chapter II: Environmental Protection Agency, Part 254: Annual Emissions Report, adopted at 17 Illinois Register 7782, effective May 14, 1993.

(B) *Other material.* June 2, 1993, commitment letter.

(98) On July 21, 1986, the State a submitted revision to its particulate matter regulations to incorporate an emission limit for continuous automatic stoking animal pathological waste incinerators.

(i) Incorporation by reference.

(A) Title 35: Environmental Protection, Subtitle B: Air Pollution, Chapter 1: Pollution Control Board, Part 212 Visible and Particulate Matter Emissions, subpart D: Particulate Matter Emissions from Incinerators, section 212.185 Continuous Automatic Stoking Animal Pathological Waste Incinerators. Adopted December 18, 1986, added at 11 Ill. Reg. 1410, effective December 30, 1986.

(99) On January 4, 1989, the State submitted revisions to its sulfur dioxide rules.

(i) Incorporation by reference.

(A) Title 35: Environmental Protection, Subtitle B: Air Pollution, Chapter 1: Pollution Control Board, Subchapter c: Emission Standards and Limitations for Stationary Sources, Part 214 Sulfur Limitations, Subpart A: General Provisions, section 214.102 Abbreviations and Units. Amended at 12 Ill. Reg. 20778, effective December 5, 1988.

(B) Title 35: Environmental Protection, Subtitle B: Air Pollution, Chapter 1: Pollution Control Board, Subchapter c: Emission Standards and Limitations for Stationary Sources, Part 214 Sulfur Limitations, Subpart A: General Provisions, section 214.104 Incorporations by Reference. Amended at 15 Ill. Reg. 1017, effective January 15, 1991.

(C) Title 35: Environmental Protection, Subtitle B: Air Pollution, Chapter 1: Pollution Control Board, Subchapter c: Emission Standards and Limitations for Stationary Sources, Part 214 Sulfur

Limitations, Subpart O: Petroleum Refining, Petrochemical and Chemical Manufacturing, section 214.382 Petroleum and Petrochemical Processes. Amended at 12 Ill. Reg. 20778, effective December 5, 1988.

(100) On October 21, 1993, the State submitted definitions codified as part of the Illinois Administrative Code for incorporation in the Illinois State Implementation Plan.

(i) Incorporation by reference.

Illinois Administrative Code Title 35: Environmental Protection, Subtitle B: Air Pollution, Chapter I: Pollution Control Board, Subchapter c: Emission Standards and Limitations for Stationary Sources, Part 211 Definitions and General Provisions, Subpart A: General Provisions: Sections 211.101 and 211.102, Subpart B: Definitions, Sections 211.121, 211.130, 211.150, 211.170, 211.210, 211.230, 211.250, 211.290, 211.310, 211.330, 211.350, 211.370, 211.390, 211.410, 211.430, 211.450, 211.470, 211.490, 211.510, 211.530, 211.550, 211.570, 211.590, 211.610, 211.630, 211.650, 211.670, 211.690, 211.710, 211.730, 211.750, 211.770, 211.790, 211.810, 211.830, 211.850, 211.870, 211.890, 211.910, 211.930, 211.950, 211.970, 211.990, 211.1010, 211.1050, 211.1090, 211.1110, 211.1130, 211.1150, 211.1170, 211.1190, 211.1210, 211.1230, 211.1250, 211.1270, 211.1290, 211.1310, 211.1330, 211.1350, 211.1370, 211.1390, 211.1410, 211.1430, 211.1470, 211.1490, 211.1510, 211.1530, 211.1550, 211.1570, 211.1590, 211.1610, 211.1630, 211.1650, 211.1670, 211.1690, 211.1710, 211.1730, 211.1750, 211.1770, 211.1790, 211.1810, 211.1830, 211.1850, 211.1870, 211.1890, 211.1910, 211.1930, 211.1950, 211.1970, 211.1990, 211.2010, 211.2050, 211.2070, 211.2090, 211.2110, 211.2130, 211.2150, 211.2170, 211.2190, 211.2210, 211.2230, 211.2250, 211.2270, 211.2310, 211.2330, 211.2350, 211.2370, 211.2390, 211.2410, 211.2430, 211.2450, 211.2470, 211.2490, 211.2510, 211.2530, 211.2550, 211.2570, 211.2590, 211.2650, 211.2670, 211.2690, 211.2710, 211.2730, 211.2750, 211.2770, 211.2790, 211.2810, 211.2830, 211.2850, 211.2870, 211.2890, 211.2910, 211.2930, 211.2950, 211.2970, 211.2990, 211.3010, 211.3030, 211.3050, 211.3070, 211.3090, 211.3110, 211.3130, 211.3150, 211.3170, 211.3190, 211.3210, 211.3230, 211.3250, 211.3270, 211.3290, 211.3310, 211.3330, 211.3350, 211.3370, 211.3390, 211.3410, 211.3430, 211.3450, 211.3470, 211.3490, 211.3510, 211.3530, 211.3550, 211.3570, 211.3590, 211.3610, 211.3630, 211.3650, 211.3670, 211.3690, 211.3710, 211.3730, 211.3750, 211.3770, 211.3790, 211.3810, 211.3830, 211.3850, 211.3870, 211.3890, 211.3910, 211.3930, 211.3970, 211.3990, 211.4010, 211.4030, 211.4050, 211.4070, 211.4090, 211.4110, 211.4130, 211.4150, 211.4170, 211.4190, 211.4210, 211.4230, 211.4250, 211.4270, 211.4290, 211.4310, 211.4330, 211.4350, 211.4370, 211.4390, 211.4410, 211.4430, 211.4450, 211.4470, 211.4490, 211.4510, 211.4530, 211.4550, 211.4590, 211.4610, 211.4630, 211.4650, 211.4670, 211.4690, 211.4710, 211.4730, 211.4750, 211.4770, 211.4790, 211.4810, 211.4870, 211.4890, 211.4910, 211.4930, 211.4950, 211.4990, 211.5030, 211.5050, 211.5070, 211.5090, 211.5110, 211.5130, 211.5150, 211.5170, 211.5185, 211.5190, 211.5210, 211.5230, 211.5250, 211.5270, 211.5310, 211.5330, 211.5350, 211.5370, 211.5410, 211.5430, 211.5450, 211.5470, 211.5490, 211.5510, 211.5550, 211.5570, 211.5590, 211.5610, 211.5630, 211.5650, 211.5670, 211.5690, 211.5710, 211.5730, 211.5750, 211.5770, 211.5790, 211.5810, 211.5830, 211.5850, 211.5870, 211.5890, 211.5910, 211.5930, 211.5950, 211.5970, 211.5990, 211.6010, 211.6030, 211.6050, 211.6070, 211.6090, 211.6130, 211.6150, 211.6190, 211.6210, 211.6230, 211.6270, 211.6290, 211.6310, 211.6330, 211.6350, 211.6370, 211.6390, 211.6410, 211.6430, 211.6450, 211.6470, 211.6490, 211.6510, 211.6530, 211.6550, 211.6570, 211.6590, 211.6610, 211.6670, 211.6690, 211.6730, 211.6750, 211.6770, 211.6790, 211.6810, 211.6850, 211.6870, 211.6890, 211.6910, 211.6930, 211.6950, 211.6970, 211.6990, 211.7010, 211.7030, 211.7070, 211.7090, 211.7110, 211.7130, 211.7150, 211.7170, 211.7190, 211.7210, 211.7230, 211.7250, 211.7270, 211.7290, 211.7310, 211.7330, 211.7350.

These section were added at 17 Ill. Reg. 16504, effective September 27, 1993.

(101) On October 21, 1993, the state submitted volatile organic compound (VOC) control regulations for incorporation in the Illinois State Implementation for ozone.

(i) Incorporation by reference.

(A) Illinois Administrative Code Title 35: Environmental Protection, Subtitle B: Air Pollution, Chapter I: Pollution Control Board, Subchapter c: Emissions Standards and Limitations

for Stationary Sources, Part 218: Organic Material Emission Standards and Limitations for the Chicago Area Subparts A, B, C, E, F, G, H, Q, R, S, T, V, W, X, Y, Z, AA, BB, and Section 218.

Appendix A, B, C, and D. These regulations were adopted at R91–7 at 15 Ill. Reg. 12231, effective August 16, 1991; amended in R91–23 at Ill. Reg. 13564, effective August 24, 1992; amended in R91–28 and R91–30 at 16 Ill. Reg. 13864, effective August 24, 1992; amended in R93–9 at 17 Ill. Reg. 16636, effective September 27, 1993. The specific adoption and effective dates of the rules incorporated by reference follow.

(*1*) Adopted at R91–7 at 15 Ill. Reg. 12231, effective August 16, 1991. Subpart A 218.108; Subpart C: 218.142; Subpart R: 218.442, 218.444, 218.448, 218.451; Subpart T: 218.484, 218.488; Subpart V: 218.526; Subpart X: 218.561, 218.563; Subpart Z: 218.607; Subpart AA: 218.625, 218.626 and 218.630.

(*2*) Amended in R93–9 at 17 Ill. Reg. 16636, effective September 27, 1993. Subpart A: 218.100, 218.101, 218.102, 218.103, 218.104, 218.105, 218.106, 218.107, 218.109, 218.110, 218.111, 218.112; Subpart B: 218.121, 218.122, 218.123, 218.124; Subpart C: 218.141, 218.143, 218.144; Subpart E: 218.181, 218.182, 218.183, 218.184, 218.186; Subpart F: 218.204, 218.205, 218.206, 218.207, 218.208, 218.209, 218.210, 218.211; Subpart G: 218.301, 218.302, 218.303, 218.304; Subpart H: 218.401, 218.402, 218.403, 218.404, 218.405; Subpart Q: 218.421, 218.422, 218.423, 218.424, 218.425, 218.426, 218.427, 218.428, 218.429; Subpart R: 218.441, 218.443, 218.445, 218.446, 218.447, 218.449, 218.450, 218.452; Subpart S: 218.461, 218.462, 218.463, 218.464; Subpart T: 218.480, 218.481, 218.482, 218.483, 218.485, 218.486, 218.487, 218.489; Subpart V: 218.525; Subpart W: 218.541; Subpart X: 218.562; Subpart Y: 218.581, 218.582, 218.583, 218.584, 218.585, 218.586; Subpart Z: 218.601, 218.602, 218.603, 218.608, 218.609, 218.610, 218.611; Subpart AA: 218.620, 218.621, 218.623, 218.624, 218.628, 218.636, 218.637; Subpart BB: 218.640, 218.642, 218.644, Section 218: Appendix A, Appendix B, Appendix C, Appendix D.

(B) Illinois Administrative Code Title 35: Environmental Protection, Subtitle B: Air Pollution, Chapter I: Pollution Control Board, Subchapter c: Emissions Standards and Limitations for Stationary Sources, Part 219: Organic Material Emission Standards and Limitations for Metro East Area Subparts A, B, C, E, F, G, H, Q, R, S, T, V, W, X, Y, Z, AA, BB and Section 219 Appendix A, B, C, and D. These regulations were adopted at R91–8 at Ill. Reg. 12491, effective August 16, 1991; amended in R91–24 at 16 Ill. Reg. 13597, effective August 24, 1992; amended in R91–30 at 16 Ill. Reg. 13833, effective August 24, 1992, emergency amendment in R93–12 at Ill. Reg. 8295, effective May 24, 1993, for a maximum of 150 days, amended in R93–9 at 17 Ill. Reg. 16918, effective September 27, 1993 and October 21, 1993. The specific adoption and effective dates of the rules incorporated by reference follow.

(*1*) Adopted at R91–8 at 15 Ill. Reg. 12491, effective August 16, 1991: Subpart A: 219.103, 219.108; Subpart C: 219.142; Subpart R: 219.442, 219.444, 219.448, 219.451; Subpart T: 219.484, 219.488; Subpart V: 219.526; Subpart X: 219.561, 219.563; Subpart Z: 219.607; Subpart AA: 219.625, 219.626, 219.630.

(*2*) Amended in R93–9 at 17 Ill. Reg. 16918, effective September 27, 1993:

Subpart A: 219.100, 219.101, 219.102, 219.104, 219.105, 219.106, 219.107, 219.109, 219.110, 219.111, 219.112;

Subpart B: 219.121, 219.122, 219.123, 219.124;

Subpart C: 219.141, 219.143, 219.144;

Subpart E: 219.181, 219.182, 219.183, 219.184, 219.186;

Subpart F: 219.204, 219.205, 219.206, 219.207, 219.208, 219.209, 219.210, 219.211;

Subpart G: 219.301, 219.302, 219.303, 219.304;

Subpart H: 219.401, 219.402, 219.403, 219.404, 219.405;

Subpart Q: 219.421, 219.422, 219.423, 219.424, 219.425, 219.426, 219.427, 219.428, 219.429;

Subpart R: 219.441, 219.443, 219.445, 219.446, 219.447, 219.449, 219.450, 219.452;

Subpart S: 219.461, 219.462, 219.463, 219.464;

Subpart T: 219.480, 219.481, 219.482, 219.483, 219.485, 219.486, 219.487, 219.489;

Subpart V: 219.525;

Subpart W: 219.541;

Subpart X: 219.562;

Subpart Y: 219.581, 219.582, 219.583, 219.584, 219.585, 219.586;

Subpart Z: 219.601, 219.602, 219.603, 219.608, 219.609, 219.610, 219.611;

Subpart AA: 219.620, 219.621, 219.623, 219.624, 219.628, 219.636, 219.637;

Subpart BB: 219.640, 219.642, 219.644;

Section 219: Appendix A, Appendix B, Appendix C, Appendix D.

(102) [Reserved]

(103) On February 11, 1993, Illinois submitted a site specific revision to its carbon monoxide State Implementation Plan for a General Motors Corporation iron foundry located adjacent to Interstate 74 at G Street in Vermilion County, Illinois.

(i) Incorporation by reference.

(A) Illinois Administrative Code; Title 35 Environmental Protection; Subtitle B: Air Pollution; Chapter I: Pollution Control Board; Subchapter C: Emission Standards and Limitations for Stationary Sources; P 216: Carbon Monoxide Emissions; Subpart O: Primary and Fabricated Metal Products; Section 216.382 Exception, General Motors Ferris Foundry in Vermilion County. Added at 16 Illinois Register 18075, effective November 13, 1992.

(104) [Reserved]

(105) On February 7, 1994, the State submitted revisions intended to create a permit program for small sources. The purpose of these revisions is to lessen the permitting burden on small sources and the permitting authority by reducing the frequency and/or the requirement of operating permit renewal for sources emitting a total of less than 25 tons per year of regulated air pollutants. A permit obtained through these procedures is intended to continue as a legally binding State document until the source modifies its operations, withdraws its permit or becomes subject to a new applicable requirement. At that time, the State will determine whether the small source procedures continue to be appropriate and issue a revised small source permit or direct the source in following the correct permit procedures. Since small source permits are not subject to a public comment period or review by USEPA, they are not federally enforceable and cannot be used to limit sources' potential to emit and thereby exempt them from the requirements of the title v operating permit program.

(i) Incorporation by reference. Illinois Administrative Code, Title 35: Environmental Protection, Subtitle B: Air Pollution, Chapter I: Pollution Control Board.

(A) Subchapter a: Permits and General Provisions, Part 201: Permits and General Provisions.

(1) Subpart D: Permit Applications and Review Process, Section 201.162 Duration and Section 201.163 Joint Construction and Operating Permits. Amended at 17 Ill. Reg., effective December 7, 1993.

(2) Subpart E: Special Provisions for Operating Permits for Certain Smaller Sources, Section 201.180 Applicability, Section 201.181 Expiration and Renewal and Section 201.187 Requirement for a Revised Permit Added at 17 Ill. Reg., effective December 7, 1993.

(B) Subchapter C: Emission Standards and Limitations for Stationary Sources, Part 211: Definitions and General Provisions, Subpart B: Definitions, Section 211.5500 Regulated Air Pollutant. Adopted at 17 Ill. Reg., effective December 7, 1993.

(106) On November 23, 1994, the State submitted amended marine vessel loading rules which consisted of revised definitions, and revisions to the Ozone Control Plan for the Chicago and Metro-East St. Louis areas.

(i) *Incorporation by reference.*

Illinois Administrative Code, Title 35: Environmental Protection, Subtitle B: Air Pollution, Chapter I: Pollution Control Board, Subchapter c: Emissions Standards and Limitations for Stationary Sources.

(A) Part 211: Definitions and General Provisions, Subpart B: Definitions, Sections 211.3480 Loading Event and 211.3660 Marine Vessel added at 18 Ill. Reg. 166769, effective October 25, 1994; Sections 211.3650 Marine Terminal, and 211.6970 Vapor Collection System, and Section 211.6990 Vapor Control System amended at 18 Ill. Reg. 16769, effective October 25, 1994.

(B) Part 218: Organic Material Emission Standards and Limitations for the Chicago Area, Subpart A; General Provisions, Sections 218.101 Savings Clause and 218.106 Compliance Dates amended at 18 Ill. Reg. 16392, effective October 25, 1994; Subpart GG: Marine Terminals, Sections 218.760 Applicability, 218.762 Control Requirements, 218.764 Compliance Certification, 218.766 Leaks, 218.768 Testing and Monitoring,

and 218.770 Recordkeeping and Reporting added at 18 Ill. Reg. 16392, effective October 25, 1994; Appendix E: List of Affected Marine Terminals amended at 18 Ill. Reg. 16392, effective October 25, 1994.

(C) Part 219: Organic Material Emissions Standards and Limitations for the Metro-East Area, Subpart A; General Provisions, Sections 219.101 Savings Clause and 219.106 Compliance Dates amended at 18 Ill. Reg. 16415, effective October 25, 1994; Subpart GG: Marine Terminals, Sections 219.760 Applicability, 219.762 Control Requirements, 219.764 Compliance Certification, 219.766 Leaks, 219.768 Testing and Monitoring, and 219.770 Recordkeeping and Reporting added at 18 Ill. Reg. 16415, effective October 25, 1994.

(107) On October 25, 1994, Illinois submitted a regulation which requires gasoline dispensing operations in the Chicago and Metro-East St. Louis ozone nonattainment areas that have storage tanks of at least 575 gallons to install pressure/vacuum relief valves on storage tank vent pipes. Tanks installed before January 1, 1979, are exempt from the rule if they have a capacity of less than 2000 gallons, as are tanks that are equipped with floating roofs or equivalent control devices that have been approved by the State and USEPA.

(i) Incorporation by reference. Illinois Administrative Code Title 35: Environmental Protection, Subtitle B: Air Pollution, Chapter I: Pollution Control Board, Subchapter c: Emissions Standards and Limitations for Stationary Sources.

(A) Part 201 Permits and General Provisions, Section 201.302 Reports. Amended at 18 Ill. Reg. 15002. Effective September 21, 1994.

(B) Part 211 Definitions and General Provisions, Section 211.5060 Pressure/Vacuum Relief Valve. Added at 18 Ill. Reg. 14962. Effective September 21, 1994.

(C) Part 218 Organic Material Emission Standards and Limitations for Chicago Area, Section 218.583 Gasoline Dispensing Operations–Storage Tank Filling Operations. Amended at 18 Ill. Reg. 14973. Effective September 21, 1994.

(D) Part 219 Organic Material Emission Standards and Limitations for Metro East Area, Section 219.583 Gasoline Dispensing Operations–Storage Tank Filling Operations. Amended at 18 Ill. Reg. 14987. Effective September 21, 1994.

(108) On January 25, 1994, the State submitted a revision to its ozone State Implementation Plan (SIP) for Quantum Chemical Corporation's facility located in Morris, Aux Sable Township, Grundy County, Illinois. It grants an adjusted standard from Parts 35 Illinois Administration Code (IAC) 218.966 and 218.986 as they apply to specific units or plants within this facility.

(i) Incorporation by reference.

(A) Illinois Pollution Control Board Final Opinion and Order, AS 92–14, adopted on October 7, 1993, and effective on October 7, 1993.

(109) On October 25, 1994, Illinois submitted a regulation that reduced the maximum allowable volatility for gasoline sold in the Metro-East St. Louis ozone nonattainment area, which includes Madison, Monroe, and St. Clair Counties, to 7.2 psi during the summer control period. The summer control period is June 1 to September 15 for retail outlets and wholesale consumers, and May 1 to September 15 for all others.

(i) Incorporation by reference. Illinois Administrative Code Title 35: Environmental Protection, Subtitle B: Air Pollution, Chapter I: Pollution Control Board, Subchapter c: Emissions Standards and Limitations for Stationary Sources, Part 219 Organic Material Emission Standards and Limitations for Metro East Area,

(A) Section 219.112 Incorporation by Reference. Amended at 18 Ill. Reg. 14987. Effective September 21, 1994.

(B) Section 219.585 Gasoline Volatility Standards. Amended at 18 Ill. Reg. 14987. Effective September 21, 1994.

(110) On September 26, 1994, the State of Illinois submitted a revision to its ozone State Implementation Plan for the J. M. Sweeney Company located in Cicero, Cook County, Illinois. It grants a compliance date extension from Stage II vapor control requirements (35 Ill. Adm. Code 218.586) from November 1, 1993, to March 31, 1995.

(i) Incorporation by reference.

(A) Illinois Pollution Control Board Final Opinion and Order, PCB 93–257, adopted on September 1, 1994, and effective on September 1, 1994. Certification

dated 9/23/94 of Acceptance by J. M. Sweeney.

(111) On July 29, 1994, Illinois submitted regulations which require adoption and implementation of particulate matter contingency measures for Illinois' four moderate particulate matter nonattainment areas. Sources in the nonattainment areas which emit at least 15 tons of particulate matter must submit two levels of contingency measures, which will then become Federally enforceable. Sources will be required to implement the contingency measures if an exceedance of the National Ambient Air Quality Standard for Particulate Matter is measured, or if the United States Environmental Protection Agency finds that an area has failed to attain the National Ambient Air Quality Standards.

(i) Incorporation by reference.

Illinois Administrative Code Title 35: Environmental Protection, Subtitle B: Air Pollution, Chapter I: Pollution Control Board;

(A) Part 106 Hearings Pursuant to Specific Rules, Section 106.930—Applicability, Section 106.931—Petition for Review, Section 106.932—Response and Reply, Section 106.933—Notice and Hearing, Section 106.934—Opinion and Order. Amended at 18 Ill. Reg. 11579–11586. Effective July 11, 1994.

(B) Part 212 Visible and Particulate Matter Emissions, Section 212.700—Applicability, Section 212.701—Contingency Measure Plans, Submittal and Compliance Date, Section 212.702—Determination of Contributing Sources, Section 212.703—Contingency Measure Plan Elements, Section 212.704—Implementation, Section 212.705—Alternative Implementation. Added at 18 Ill. Reg. 11587–11606. Effective July 11, 1994.

(112) On March 28, 1995, the State of Illinois submitted a revision to its ozone State Implementation Plan for P & S, Incorporated's facility located in Wood Dale, Du Page County, Illinois. It grants a compliance date extension from Stage II vapor control requirements (35 Ill. Adm. Code 218.586) from November 1, 1994 until April 1, 1996, or 60 days after notification to P & S, Incorporated that the roadway construction complicating the installation of Stage II equipment will be abandoned for any reason, whichever is sooner.

(i) Incorporation by reference.

(A) Illinois Pollution Control Board Final Opinion and Order, PCB 94–299, adopted on February 16, 1995, and effective on February 16, 1995. Certification dated March 1, 1995 of Acceptance by P & S, Incorporated.

(113) On April 27, 1995, the Illinois Environmental Protection Agency requested a revision to the Illinois State Implementation Plan in the form of revisions to the State's New Source Review rules for sources in the Chicago and metropolitan East St. Louis ozone nonattainment areas and are intended to satisfy Federal requirements of the Clean Air Act as amended in 1990. The State's New Source Review provisions are codified at Title 35: Environmental Protection Subtitle B: Air Pollution, Chapter I: Pollution Control Board, Subchapter a: Permits and General Provisions. Part 203 Major Stationary Sources Construction and Modification is amended as follows:

(i) Incorporation by reference.

(A) Title 35: Environmental Protection, Subpart A: General Provisions, Section 203.101 Definitions, Section 203.107 Allowable Emissions, Section 203.110 Available Growth Margin, Section 203.112 Building, Structure and Facility, Section 203.121 Emission Offset, Section 203.122 Emissions Unit, Section 203.123 federally Enforceable, Section 203.126 Lowest Achievable Emission Rate, Section 203.128 Potential to Emit, Section 203.145 Volatile Organic Material, Section 203.150 Public Participation. Effective April 30, 1993.

(B) Title 35: Environmental Protection, Subpart B: Major Stationary Sources in Nonattainment Areas, Section 203.201 Prohibition, Section 203.203 Construction Permit Requirement and Application, Section 203.206 Major Stationary Source, Section 203.207 Major Modification of a Source, Section 203.208 Net Emission Determination, Section 203.209 Significant Emissions Determination. Effective April 30, 1993.

(C) Title 35: Environmental Protection, Subpart C: Requirements for Major Stationary Sources in Nonattainment Areas, Section 203.301 Lowest Achievable Emission Rate, Section 203.302 Maintenance of Reasonable Further Progress and Emission Offsets, Section 203.303 Baseline and Emission

Offsets Determination, Section 203.306 Analysis of Alternatives. Effective April 30, 1993.

(D) Title 35: Environmental Protection, Subpart H: Offsets for Emission Increases From Rocket Engines and Motor Firing, Section 203.801 Offsetting by Alternative or Innovative Means. Effective April 30, 1993. Published in the Illinois Register, Volume 17, Issue 20, May 14, 1993.

(114) On November 30, 1994, the State submitted an amended Synthetic Organic Chemical Manufacturing Industry Air Oxidation Process rule which consisted of extended applicability and tightened control measures to the Ozone Control Plan for the Chicago and Metro-East St. Louis areas.

(i) Incorporation by reference. Illinois Administrative Code, Title 35: Environmental Protection, Subtitle B: Air Pollution, Chapter I: Pollution Control Board, Subchapter c: Emissions Standards and Limitations for Stationary Sources.

(A) Part 218: Organic Material Emission Standards and Limitations for the Chicago Area, Subpart V; Air Oxidation Processes, Sections 218.520 Emission Limitations for Air Oxidation Processes, 218.522 Savings Clause, 218.523 Compliance, 218.524 Determination of Applicability, and 218.525 Emission Limitations for Air Oxidation Processes (Renumbered) at 18 Ill. Reg. 16972, effective November 15, 1994.

(B) Part 219: Organic Material Emissions Standards and Limitations for the Metro-East Area, Subpart V; Air Oxidation Processes, Sections 219.520 Emission Limitations for Air Oxidation Processes, 219.522 Savings Clause, 219.523 Compliance, 219.524 Determination of Applicability, and 219.525 Emission Limitations for Air Oxidation Processes (Renumbered) at 18 Ill. Reg. 17001, effective November 15, 1994.

(115) On May 5, 1995, and May 26, 1995, the State submitted an amended coating rule which consisted of a tightened applicability cut-off level for wood furniture coating operations to the Ozone Control Plan for the Chicago and Metro-East St. Louis areas.

(i) Incorporation by reference. Illinois Administrative Code, Title 35: Environmental Protection, Subtitle B: Air Pollution, Chapter I: Pollution Control Board, Subchapter c: Emissions Standards and Limitations for Stationary Sources.

(A) Part 218: Organic Material Emission Standards and Limitations for the Chicago Area, Subpart F; Coating Operations, Sections 218.208 Exemptions from Emission Limitations, Subsection (b), amended at 19 Ill. Reg. 6848, effective May 9, 1995.

(B) Part 219: Organic Material Emissions Standards and Limitations for the Metro-East Area, Subpart F; Coating Operations, Section 219.208 Exemptions from Emission Limitations, Subsection (b), amended at 19 Ill. Reg. 6958, effective May 9, 1995.

(116) On May 5, 1995, and May 26, 1995, the State submitted a rule for automotive/transportation and business machine plastic parts coating operations, which consisted of new volatile organic compound emission limitations to the Ozone Control Plan for the Chicago and Metro-East St. Louis areas.

(i) Incorporation by reference. Illinois Administrative Code, Title 35: Environmental Protection, Subtitle B: Air Pollution, Chapter I: Pollution Control Board, Subchapter c: Emissions Standards and Limitations for Stationary Sources.

(A) Part 211: Definitions and General Provisions, Subpart B; Definitions, Sections 211.660 Automotive/Transportation Plastic Parts, 211.670 Baked Coatings, 211.820 Business Machine Plastic Parts, 211.1880 Electromagnetic Interference/Radio Frequency Interference Shielding Coatings, 211.1900 Electrostatic Prep Coat, 211.2360 Flexible Coatings, 211.2630 Gloss Reducers, 211.4055 Non-Flexible Coating, 211.4740 Plastic Part, 211.5480 Reflective Argent Coating, 211.5600 Resist Coat, 211.6060 Soft Coat, 211.6140 Specialty Coatings, 211.6400 Stencil Coat, 211.6580 Texture Coat, and 211.6880 Vacuum Metallizing, amended at 19 Ill. 6823, effective May 9, 1995.

(B) Part 218: Organic Material Emission Standards and Limitations for the Chicago Area, Subpart F; Coating Operations, Sections 218.204 Emission Limitations, Subsection (n) Plastic Parts Coating: Automotive/Transportation and (o) Plastic Parts Coating: Business Machine, 218.205 Daily-

Weighted Average Limitations, Subsection (g), and 218.207 Alternative Emission Limitations, Subsection (i), amended at 19 Ill. 6848, effective May 9, 1995.

(C) Part 219: Organic Material Emissions Standards and Limitations for the Metro-East Area, Subpart F; Coating Operations, Section 219.204 Emission Limitations, Subsection (m) Plastic Parts Coating: Automotive/Transportation and (n) Plastic Parts Coating: Business Machine, 219.205 Daily-Weighted Average Limitations, Subsection (f), and 219.207 Alternative Emission Limitations, Subsection (h), amended at 19 Ill. Reg. 6958, effective May 9, 1995.

(117) On May 31, 1995, the State submitted amended lithographic printing rules which consisted of revised definitions, and revisions to the Ozone Control Plan for the Chicago and Metro-East St. Louis areas.

(i) Incorporation by reference.

Illinois Administrative Code, Title 35: Environmental Protection, Subtitle B: Air Pollution, Chapter I: Pollution Control Board, Subchapter c: Emissions Standards and Limitations for Stationary Sources.

(A) Part 211: Definitions and General Provisions, Subpart B: Definitions, Sections 211.474 Alcohol, 211.560 As-Applied Fountain Solution, 211.2850 Heatset Web Offset Lithographic Printing Line, 211.4065 Non-Heatset, 211.5980 Sheet-Fed added at 19 Ill. Reg. 6823, effective May 9, 1995.

(B) Part 218: Organic Material Emission Standards and Limitations for the Chicago Area, Subpart H; Printing and Publishing, Sections 218.405 Lithographic Printing: Applicability, 218.406 Provisions Applying to Heatset Web Offset Lithographic Printing Prior to March 15, 1996, 218.407 Emissions Limitations and Control Requirements for Lithographic Printing Lines On and After March 15, 1996, 218.408 Compliance Schedule for Lithographic Printing on and After March 15, 1996, 218.409 Testing for Lithographic Printing On and After March 15, 1996, 218.410 Monitoring Requirements for Lithographic Printing, 218.411 Recordkeeping and Reporting for Lithographic Printing added at 19 Ill. Reg. 6848, effective May 9, 1995.

(C) Part 219: Organic Material Emissions Standards and Limitations for the Metro-East Area, Subpart H; Printing and Publishing, Sections 219.405 Lithographic Printing: Applicability, 219.406 Provisions Applying to Heatset Web Offset Lithographic Printing Prior to March 15, 1996, 219.407 Emissions Limitations and Control Requirements for Lithographic Printing Lines On and After March 15, 1996, 219.408 Compliance Schedule for Lithographic Printing on and After March 15, 1996, 219.409 Testing for Lithographic Printing On and After March 15, 1996, 219.410 Monitoring Requirements for Lithographic Printing, 219.411 Recordkeeping and Reporting for Lithographic Printing added at 19 Ill. Reg. 6848, effective May 9, 1995.

(118) On October 24, 1994, the State submitted a site-specific revision to the State Implementation Plan establishing lubricant selection and temperature control requirements for Alumax Incorporated, Morris, Illinois facility's hot and cold aluminum rolling mills, as part of the Ozone Control Plan for the Chicago area.

(i) Incorporation by reference. September 1, 1994, Opinion and Order of the Illinois Pollution Control Board AS 92–13, effective September 1, 1994.

(119) On May 5, 1995, and May 26, 1995, the State submitted a revised rule tightening volatile organic compound emission limitations for certain surface coating operations in the Chicago and Metro-East St. Louis areas.

(i) *Incorporation by reference.* Illinois Administrative Code, Title 35: Environmental Protection, Subtitle B: Air Pollution, Chapter I: Pollution Control Board, Subchapter c: Emissions Standards and Limitations for Stationary Sources.

(A) Part 218: Organic Material Emission Standards and Limitations for the Chicago Area, Subpart F; Coating Operations, Sections 218.204 Emission Limitations, 218.205 Daily-Weighted Average Limitations, 218.207 Alternative Emission Limitations, 218.208 Exemptions From Emission Limitations, 218.210 Compliance Schedule, 218.212 Cross-line Averaging to Establish Compliance for Coating Lines, 218.213 Recordkeeping and Reporting for Cross-line Averaging Participating

Coating Lines, 218.214 Changing Compliance Methods, 218 Appendix H Baseline VOM Content Limitations for Subpart F, Section 218.212 Cross-Line Averaging, amended at 19 Ill. 6848, effective May 9, 1995.

(B) Part 219: Organic Material Emissions Standards and Limitations for the Metro-East Area, Subpart F; Coating Operations, Sections 219.204 Emission Limitations, 219.205 Daily-Weighted Average Limitations, 219.207 Alternative Emission Limitations, 219.208 Exemptions From Emission Limitations, 219.210 Compliance Schedule, 219.212 Cross-line Averaging to Establish Compliance for Coating Lines, 219.213 Recordkeeping and Reporting for Cross-line Averaging Participating Coating Lines, 219.214 Changing Compliance Methods, 219 Appendix H Baseline VOM Content Limitations for Subpart F, Section 219.212 Cross-line Averaging, amended at 19 Ill. Reg. 6958, effective May 9, 1995.

(120) [Reserved]

(121) On May 23, 1995, and June 7, 1995, the State submitted volatile organic compound control regulations for incorporation in the Illinois State Implementation Plan for ozone.

(i) Incorporation by reference.

(A) Title 35: Environmental Protection, Subtitle B: Air Pollution, Chapter I: Pollution Control Board, Subchapter c: Emission Standards and Limitations for Stationary Sources, Part 211: Definitions and General Provisions, Subpart B: Definitions, Sections 211.695, 211.696, 211.5245, 211.6025. These sections were adopted on May 4, 1995, Amended at 19 Ill. Reg. 7344, and effective May 22, 1995.

(B) Title 35: Environmental Protection, Subtitle B: Air Pollution, Chapter I: Pollution Control Board, Subchapter c: Emission Standards and Limitations for Stationary Sources, Part 218: Organic Material Emission Standards and Limitations for the Chicago Area, Subpart V: 218.500, 218.501, 218.502, 218.503, 218.504, 218.505, 218.506. These sections were adopted on May 4, 1995, Amended at 19 Ill. Reg. 7359, and effective May 22, 1995.

(C) Title 35: Environmental Protection, Subtitle B: Air Pollution, Chapter I: Pollution Control Board, Subchapter c: Emission Standards and Limitations for Stationary Sources, Part 219: Organic Material Emission Standards and Limitations for the Metro East Area, Subpart V: 219.500, 219.501, 219.502, 219.503, 219.504, 219.505, 219.506. These sections were adopted on May 4, 1995, Amended at 19 Ill. Reg. 7385, and effective May 22, 1995.

(122) On June 26, 1995, the Illinois Environmental Protection Agency (IEPA) submitted a State Implementation Plan (SIP) revision containing the 1992 enhancements to the Illinois vehicle inspection and maintenance (I/M) program. Such enhancements were originally developed to meet the I/M performance standard as called for in the United States Environmental Protection Agency's (USEPA's) proposed 'post-1987' I/M SIP policy and specified in the settlement agreement entered into by the parties in *Wisconsin* v. *Reilly,* Case No. 87–C–0395, E.D. Wis. The submittal includes authorizing legislation P.A. 86–1433, signed into law on September 12, 1990 and procedural rules published in the Illinois Register on June 26, 1992 at Volume 16, Issue #16.

(i) Incorporation by reference.

(A) 35 Illinois Administrative Code 276; Sections 276.101, 276.102, 276.204, 276.206, 276.301, 276.303, 276.304, 276.307, 276.308, 276.309, 276.310, 276.311, 276.401, 276.402, 276.701, 276.702, and 276.703 amended or added at 16 Ill. Reg. 10230, effective June 15, 1992.

(ii) Other material.

(A) Public Act 86–1433 adopted by the Illinois General Assembly on June 29, 1990, signed into law by Governor Edgar on September 12, 1990 effective September 12, 1990 (Sections 2,3, and 4) and January 1, 1991 (Section 1). (B) June 26, 1995 letter and attachments from the IEPA's Bureau of Air Chief to the USEPA's Regional Air and Radiation Division Director submitting Illinois' revision to the ozone SIP.

(123) [Reserved]

(124) The state of Illinois requested a revision to the Illinois State Implementation Plan (SIP). This revision is for the purpose of establishing and implementing a Clean-Fuel Fleet Program in the Chicago ozone nonattainment area, which includes Cook, DuPage, Grundy (Aux Sable and Goose Lake townships only), Kane, Kendall (Oswego township only), Lake,

McHenry, and Will counties, to satisfy the federal requirements for a Clean Fuel Fleet Program to be part of the SIP for Illinois.

(i) Incorporation by reference.

(A) 35 Illinois Administrative Code 241; Sections 241.101, 241.102, 241.103, 241.104, 241.110, 241.111, 241.112, 241.113, 241.114, 241.115, 241.130, 241.131, 241.140, 241.141, 241.142, 241. Appendix A, 241. Appendix B adopted in R95–12 at 19 Ill. Reg. 13265, effective September 11, 1995.

(ii) Other material.

(A) September 29, 1995 letter and attachments from the Illinois Environmental Protection Agency's Bureau of Air Chief to the USEPA's Regional Air and Radiation Division Director submitting Illinois' revision to the ozone SIP.

(125) On November 14, 1995 the State submitted requested revisions to the Illinois State Implementation Plan in the form of revisions to the definitions of Organic Material and Organic Materials, Organic Solvent, Petroleum Liquid and Volatile Organic Material (VOM) or Volatile Organic Compound (VOC) intended to exempt acetone from regulation as a VOC.

(i) Incorporation by reference. Illinois Administrative Code, Title 35: Environmental Protection, Subtitle B: Air Pollution, Chapter I: Pollution Control Board, Subchapter c: Emission Standards and Limitations for Stationary Sources, Part 211: Definitions and General Provisions, Subpart B: Definitions, Section 211.4250 Organic Material and Organic Materials, Section 211.4260 Organic Solvent, Section 211.4610 Petroleum Liquid, Section 211.7150 Volatile Organic Material (VOM) or Volatile Organic Compounds (VOC). Amended at 19 Ill. Reg. 15176, effective October 19, 1995.

(126) On November 15, 1995 the State submitted a requested revision to the Illinois State Implementation Plan in the form of a revision to the definition Volatile Organic Material (VOM) or Volatile Organic Compound (VOC) intended to exempt parachlorobenzotrifluoride and cyclic, branched or linear completely methylated siloxanes from the definition of VOM or VOC and thereby, from regulation as a VOC.

(i) Incorporation by reference. Illinois Administrative Code, Title 35: Environmental Protection, Subtitle B: Air Pollution, Chapter I: Pollution Control Board, Subchapter c: Emission Standards and Limitations for Stationary Sources, Part 211: Definitions and General Provisions, Subpart B: Definitions, Section 211.7150 Volatile Organic Material (VOM) or Volatile Organic Compounds (VOC). Amended at 19 Ill. Reg. 11066, effective July 12, 1995.

(127) On October 21, 1993, and May 26, 1995, Illinois submitted volatile organic compound control regulations for incorporation in the Illinois State Implementation Plan for ozone.

(i) Incorporation by reference.

(A) Illinois Administrative Code Title 35: Environmental Protection, Subtitle B: Air Pollution, Chapter I: Pollution Control Board, Subchapter c: Emissions Standards and Limitations for Stationary Sources, Part 219: Organic Material Emissions Standards and Limitations for Metro East Area, Subpart PP: 219.920, 219.923, 219.927, 219.928; Subpart QQ: 219.940, 219.943, 219.947, 219.948; Subpart RR: 219.960, 219.963, 219.967, 219.968; Subpart TT: 219.980, 219.983, 219.987, 219.988; and Subpart UU. These Subparts were adopted on September 9, 1993, Amended at 17 Ill. Reg. 16918, effective September 27, 1993.

(B) Illinois Administrative Code Title 35: Environmental Protection, Subtitle B: Air Pollution, Chapter I: Pollution Control Board, Subchapter c: Emissions Standards and Limitations for Stationary Sources, Part 219: Organic Material Emissions Standards and Limitations for Metro East Area, Subpart PP: 219.926; Subpart QQ: 219.946; Subpart RR: 219.966; and Subpart TT: 219.986. These Subparts were adopted on April 20, 1995, Amended at 19 Ill. Reg. 6958, effective May 9, 1995.

[37 FR 10862, May 31, 1972]

EDITORIAL NOTE: For FEDERAL REGISTER citations affecting § 52.720, see the List of CFR Sections Affected in the Finding Aids section of this volume.

EFFECTIVE DATE NOTE: At 61 FR 20457, May 7, 1996, § 52.720 was amended by adding paragraph (c)(127), effective July 8, 1996.

§52.721 Classification of regions.

The Illinois plan was evaluated on the basis of the following classifications:

Air quality control region	Pollutant				
	Particulate matter	Sulfur oxides	Nitrogen dioxide	Carbon monoxide	Ozone
Burlington-Keokuk Interstate	I	I	III	III	III
East Central Illinois Intrastate	III	II	III	III	III
Metropolitan Chicago Interstate (Indiana-Illinois)	I	I	I	I	I
Metropolitan Dubuque Interstate	I	III	III	III	III
Metropolitan Quad Cities Interstate	I	III	III	III	III
Metropolitan St. Louis Interstate (Missouri-Illinois)	I	I	III	I	I
North Central Illinois Intrastate	II	IA	III	III	III
Paducah (Kentucky)-Cairo (Illinois) Interstate	I	II	III	III	III
Rockford (Illinois)-Janesville-Beloit (Wisconsin) Interstate	II	III	III	III	III
Southeast Illinois Intrastate	III	II	III	III	III
West Central Illinois Intrastate	I	IA	III	III	III

[37 FR 10862, May 31, 1972, as amended at 39 FR 16346, May 8, 1974; 45 FR 11493, Feb. 21, 1980]

§52.722 Approval status.

(a) With the exceptions set forth in this subpart, the Administrator approved Illinois' plan for the attainment and maintenance of the National Ambient Air Quality Standards under section 110 of the Clean Air Act. Furthermore, the Administrator finds the plan satisfies all requirements of part D, title I of the Clean Air Act as amended in 1977, except as noted below. In addition, continued satisfaction of the requirements of part D for the ozone portion of the SIP depends on the adoption and submittal of RACT requirements by July 1, 1980, for the sources covered by CTGs between January 1978 and January 1979 and adoption and submittal by each subsequent January of additional RACT requirements for sources covered by CTGs issued by the previous January.

(b) The Administrator finds that the transportation control plans for the East St. Louis and Chicago areas submitted on December 3, 1982, satisfy the related requirements of part D, title I of the Clean Air Act, as amended in 1977.

(c) The Administrator finds that the carbon monoxide control strategy submitted on May 4, 1983, satisfies all requirements of part D, title I of the Clean Air Act, as amended in 1977, except for section 172(b)(6).

[55 FR 40661, Oct. 4, 1990]

§52.723 [Reserved]

§52.724 Control strategy: Sulfur dioxide.

(a) Part D—Conditional Approval—The Illinois plan is approved provided that the following condition is satisfied:

(1) The plan includes a reanalysis of the Pekin, Illinois area, a submittal of the analysis results to USEPA, the proposal of any additional regulations to the Illinois Pollution Control Board necessary to insure attainment and maintenance of the sulfur dioxide standard, and the promulgation of any necessary regulations. The State must complete the reanalysis, submit the results to USEPA and submit any necessary, additional regulations to the Illinois Pollution Control Board by September 30, 1980. Any necessary regulation must be finally promulgated by the State and submitted to USEPA by September 30, 1981.

(2) Extension of Condition—USEPA approves the date of July 1, 1984 for submitting the draft sulfur dioxide rule revisions and supporting documentation as required in (a)(1) for Peoria, Hollis and Groveland Townships in Illinois. The State must complete final rule adoption as expeditiously as possible but no later than December 31, 1985.

(b) Part D—Disapproval—USEPA disapproves Rules 204(c)(1)(B), Rule

204(c)(1)(C), Rule 204(e)(1) and Rule 204(e)(2) for those sources for which these rules represent a relaxation of the federally enforceable State Implementation Plan. Rule 204(c)(1)(B), Rule 204(c)(1)(C), Rule 204(e)(1) and Rule 204(e)(2) are approved as not representing relaxations of the State Implementation Plan for the following sources:

SOURCES OF 10 MILLION BTU PER HOUR OR MORE NOT INCREASING ALLOWABLE SULFUR DIOXIDE EMISSIONS AS A RESULT OF RECORD RULES 204(C) AND 204(E) BECAUSE NEW ALLOWABLE EMISSIONS RATE IS SAME AS OR LESS THAN OLD ALLOWABLE RATE POUNDS PER HOUR (POUNDS PER MILLION BTU)

County	Name	Emissions formerly allowable [1]	Emissions now allowable without new permit application [2]
Boone	Chrysler	1,760 (4.4)	1,760 (4.4)
Champaign	Chanute Air Base	1,317 (3.0)	1,317 (3.0)
Crawford	CIPS	8,242 (5.1)	8,242 (5.1)
Douglas	USI Chemicals	8,022 (5.3)	8,022 (5.3)
Fulton	Freeman Coal	22.2 (1.2)	22.2 (1.2)
La Salle	Del Monte	296 (3.9)	296 (3.9)
Massac	EEI Joppa	36,865 (3.6)	36,865 (3.6)
Montgomery	CIPS	55,555 (5.8)	55,555 (5.8)
Morgan	.....do	24,000 (6.0)	20,800 (5.2)
Putnam	Illinois Power	17,051 (5.8)	17,051 (5.8)
Randolph	.....do [3]	81,339 (4.6)	81,339 (4.6)
Rock Island	International Harvester	1,643 (4.35)	1,643 (4.35)
Williamson	Marion Correctional	396 (5.7)	396 (5.7)

[1] 6.0 lbs/MMBTU of existing coal fired capacity or total 204(e)(2) emissions less actual oil fired and NSPS emissions, whichever is lower.

[2] Maximum allowable emissions for existing coal fired capacity according to revised rules 204(c) and 204(e) consolidated, usually equally equalling total emissions as given by 204(e)(2) less actual oil fired NSPS emissions. (In the one case wherein the new allowable limit is less than that given by 204(e)(2) the allowable emissions were determined by 204(e)(1) with which the source is required to comply.)

[3] Source is in compliance per 204(e)(3).

CIPS=Central Illinois Public Service.
EEI=Electric Energy Incorporated.

This disapproval does not in and of itself result in the growth restrictions of section 110(a)(2)(1).

(c) Disapproval—USEPA disapproves Rule 204(e)(4) as not being adequate to protect the NAAQS. This disapproval does not in and of itself result in the growth restrictions of section 110(a)(2)(I).

(d) Disapproval—USEPA disapproves Rule 204(f)(1)(D) as completely deregulating SO_2 emissions from existing processes without providing an assessment of the ambient air quality impact or a showing that increasing the allowable emissions from these sources will not cause or contribute to violations of the NAAQS or PSD increments. This disapproval does not in and of itself result in the growth restrictions of section 110(a)(2)(I).

(e) Disapproval—USEPA disapproves Rule 204(h) for those sources for which USEPA has disapproved rules 204(c) and 204(e). This disapproval does not in and of itself result in the growth restrictions of section 110(a)(2)(I).

(f) Approval—USEPA approves rule 204(e)(3) for those sources able to show that the proposed emission rate will not cause or contribute to a violation of the NAAQS. The State must submit these emission limitations, along with the technical support to USEPA for approval.

(g) Part D—Approval—The State plan for Alton Township, Madison County, which consists of a federally Enforceable State Operating Permit controlling sulfur dioxide emissions from the boilers and reheat furnaces at Laclede Steel, which was submitted on November 18, 1993, is approved.

(h) Approval—On November 10, 1994, the Illinois Environmental Protection Agency submitted a sulfur dioxide redesignation request and maintenance plan for Peoria and Hollis Townships in Peoria County and Groveland Township in Tazewell County to redesignate the townships to attainment for sulfur

dioxide. The redesignation request and maintenance plan meet the redesignation requirements in section 107(d)(3)(d) of the Clean Air Act (Act) as amended in 1990.

[45 FR 62806, 62809, Sept. 22, 1980, as amended at 50 FR 5250, Feb. 7, 1985; 59 FR 18753, Apr. 20, 1994; 60 FR 17001, Apr. 4, 1995]

§52.725 Control strategy: Particulates.

(a) [Reserved]

(b) Part D—Disapproval. (1) U.S. EPA disapproves the provisions of Rule 203(f) which allow the use of an equivalent method without review and approval of that method. Any source subject to Rule 203(f) which chooses to use an equivalent method must have that equivalent method submitted to U.S. EPA and approved as a SIP revision.

(2) U.S. EPA disapproves the following portions of Rule 203(d)(5) which regulate the control of particulate matter from specific sources within the iron and steel industry: Rule 205(d)(5)(B)(ii), Rule 205(d)(5)(B)(iii), Rule 205(d)(5)(D), and Rule 205(d)(5)(K).

(3) USEPA disapproves a proposed SIP revision submitted by the State on May 12, 1982, in the form of a May 18, 1981 Consent Decree (Civil Action 81–3009) to which USEPA, Illinois Environmental Protection Agency and National Steel Corporation are parties and a draft Alternative Control Strategy Permit. This submission was modified by the State, September 30, 1982, with the submission of a separate document embodying the elements of the Alternative Control Strategy. This separate document was intended to become an enforceable part of the SIP.

(c) Approval—On September 28, 1988, the State of Illinois submitted a committal SIP for particulate matter with an aerodynamic diameter equal to or less than 10 micrometers (PM_{10}) for the Illinois Group II areas of concern in DuPage, Will, Rock Island, Macon, Randolph, and St. Clair Counties. The committal SIP contains all the requirements identified in the July 1, 1987, promulgation of the SIP requirements for PM_{10} at 52 FR 24681.

[45 FR 11493, Feb. 21, 1980, as amended at 46 FR 44185, Sept. 3, 1981; 47 FR 26620, June 21, 1982; 48 FR 45246, Oct. 4, 1983; 49 FR 1905, Jan. 16, 1984; 55 FR 20266, May 16, 1990]

§52.726 Control strategy: Ozone.

(a) Part D—Conditional Approval—The Illinois plan is approved provided that the following conditions are satisfied:

(1) [Reserved]

(2) The State conducts a study to demonstrate that the 75 percent overall control efficiency requirement in Rule 205(n) represents RACT, submits the results of the study to USEPA, and submits any necessary regulations representing RACT to the Illinois Pollution Control Board. The State must comply with these conditions by February 28, 1981. Any necessary regulations must be finally promulgated by the State and submitted to USEPA by February 28, 1982.

(3) Extension of Condition—USEPA approves the date of July 31, 1984 for the State of Illinois to satisfy the condition of approval to the ozone State Implementation Plan listed in paragraph (a)(2) of this section.

(b) Disapproval—USEPA disapproves the compliance schedule in Rule 205(j) as it applies to loading rack controls for all emission sources subject to Rule 205(b)(1), as approved by USEPA on May 31, 1972 which were required to be in compliance by December 31, 1973. This disapproval does not in and of itself result in the growth restrictions of section 110(a)(2)(I).

(c) *Negative Declarations—Stationary Source Catagories.* The State of Illinois has certified to the satisfaction of USEPA that no sources are located in the nonattainment areas of the State which are covered by the following Control Technique Guidelines:

(1) High density polyethylene and polypropylene manufacturers.

(2) Vegetable oil processing sources with volatile organic compound emissions equal to or greater than 100 tons per year.

(d) Part D Disapproval—The Administrator finds that Illinois' ozone plan for Cook, Lake, DuPage and Kane Counties, which was required to be submitted by July 1, 1982, does not satisfy all the requirements of Part D, Title I of the Clean Air Act and, thus, is disapproved. No major new stationary source, of major modification of a stationary source, or volatile organic compounds may be constructed in

Cook, Lake, DuPage or Kane Counties, unless the construction permit application is complete on or before November 16, 1988. This disapproval does not affect USEPA's approval (or conditional approval) of individual parts of Illinois' ozone plan, and they remain approved.

(e) Disapproval—The Administrator finds that the following State rules have not been demonstrated to be consistent with the reasonably available control technology requirements of section 172 of the Clean Air Act, as amended in 1977, and thus, are disapproved: subpart F, section 215.204(c); subpart F, section 215.206(b); subpart F, section 215.204(j)(4); subpart I; subpart AA; subpart PP; subpart QQ; subpart RR; subpart A, section 215.102; subpart T; subpart H, section 215.245; subpart F, section 215.207; and subpart A, section 215.107, all of title 35; Environmental Protection; subtitle B: Air Pollution; Chapter 1: Pollution Control Board of the Illinois Administrative Code (June 1989).

(f) On September 30, 1992, the State submitted rules regulating volatile organic compound emissions from gasoline dispensing facilities' motor vehicle fuel operations (Stage II vapor recovery rules) in the Chicago ozone nonattainment area. The Illinois Environmental Protection Agency Bureau of Air must as part of the program conduct inspections of facilities subject to this rule to ensure compliance with the applicable rules. These inspections will be conducted on an annual basis or an alternative schedule as approved in the USEPA Fiscal Year Inspection Program Plan.

(g) Approval—The Administrator approves the incorporation of the photochemical assessment ambient monitoring system submitted by Illinois on November 4, 1993, into the Illinois State Implementation Plan. This submittal satisfies 40 CFR 58.20(f) which requires the State to provide for the establishment and maintenance of photochemical assessment monitoring stations (PAMS) by November 12, 1993.

(h) Approval—On November 12, 1993, the Illinois Environmental Protection Agency submitted an ozone redesignation request and maintenance plan for Jersey County ozone nonattainment area and requested that Jersey County be redesignated to attainment for ozone. The redesignation request and maintenance plan meet the redesignation requirements in section 107(d)(3)(d) of the Act. The redesignation meets the Federal requirements of section 182(a)(1) of the Clean Air Act as a revision to the Illinois ozone State Implementation Plan for Jersey County.

(i) The base year (1990) ozone emission inventory requirement of section 182(a)(1) of the Clean Air Act, as amended in 1990, has been satisfied for the following Illinois ozone nonattainment areas: the Chicago nonattainment area—Cook, DuPage, Kane, Lake, Will and McHenry Counties, Aux Sable and Gooselake Townships in Grundy County, and Oswego Township in Kendall County; the Metro-East St. Louis nonattainment area—Madison, Monroe, and St. Clair Counties; and Jersey County.

(j) Approval—On July 14, 1994, Illinois submitted two of three elements required by section 182(d)(1)(A) of the Clean Air Amendments of 1990 to be incorporated as part of the vehicle miles traveled (VMT) State Implementation Plan intended to offset any growth in emissions from a growth in vehicle miles traveled. These elements are the offsetting of growth in emissions attributable to growth in VMT which was due November 15, 1992, and, transportation control measures (TCMs) required as part of Illinois' 15 percent reasonable further progress (RFP) plan which was due November 15, 1993. Illinois satisfied the first requirement by projecting emissions from mobile sources and demonstrating that no increase in emissions would take place. Illinois satisfied the second requirement by submitting the TCMs listed in Table 1 which are now approved into the Illinois SIP.

TABLE 1

Project type	Location description	Completion status	SIP credit VOC tpd
RS/SIG MOD	Madison Street (Western Ave. to Halsted Street)	Done	0.015400
SIG COORD	Willow Road (Landwer Road to Shermer)	Awarded	0.052000
SIG COORD	Rand Road (Baldwin Road to Kennicott)	Awarded	0.052000
SIG COORD	Northwest Hwy (Potter Road to Cumberland Avenue)	Awarded	0.030000
SIGS/SIG COORD	159th Street (US 45 to 76th Ave & at 91st Avenue)	Awarded	0.030000
SIG COORD	Harlem Ave. (71st St. to 92nd)	Awarded	0.052000
SIG COORD	Harlem Ave. (99th Street to 135th St.)	Awarded	0.052000
RECONST/SIGS/LTS	Archer Ave. (88th Ave to 65th St.)	Awarded	0.030000
SIG COORD	Ogden Ave. (N. Aurora Road to Naper Boulevard)	Awarded	0.030000
SIG COORD	North Ave. (Tyler to Kautz)	Awarded	0.030000
SIG COORD	Higgens Road (Il 72 at Il 31)	Awarded	0.030000
SIG COORD	Sheridan Road (Il 173 to Wadsworth)	Awarded	0.030000
SIG COORD	Lagrange Road (Belmont to Lake St.)	Awarded	0.030000
SIG COORD	Dundee Road (Sanders Road to Skokie Valley Road)	Awarded	0.052000
SIG COORD	Dundee Road (Buffalo Grove Road to Il 21)	Awarded	0.030000
INT IMP/SIG COORD	Golf Road (E. River Road to Washington Ave.)	Awarded	0.052000
SIG COORD	Golf Road (Barrington to Roselle Road)	Awarded	0.030000
SIG COORD	Higgins Road (Barrington to Roselle Road)	Awarded	0.030000
SIG COORD	Joe Orr Road (Vincennes Ave. to Il 1)	Awarded	0.030000

TABLE 1

Project type	Location description	Completion status	SIP credit
SIG COORD/RS	Crawford Ave. (93rd Street to 127th Street)	Awarded	0.052000
SIG COORD	IL 53 (Briarcliff to South of I–55)	Done	0.030000
SIG COORD	Ogden Ave. (Oakwood Avenue to Fairview Avenue)	Awarded	0.019000
SIG COORD	US 14 (Rohlwing Road to Wilke Road)	Awarded	0.030000
SIG COORD	US 30 (At Cottage Grove, Ellis St)	Awarded	0.030000
SIG COORD	IL 53 (Modonough to Mills)	Done	0.030000
SIG CONN	Ogden Ave. (IL 43 to 31st Street)	Awarded	0.013000
SIG CONN	US 12 (Long Grove—Hicks Road)	Awarded	0.055200
SIG CONN	North Ave. (Oak Park to Ridgeland)	Awarded	0.007000
SIG CONN	Roosevelt Road (Westchester Bl—IL 43)	Awarded	0.137000
SIG CONN	Depster St (Keeler to Crawford Ave.)	Awarded	0.010000
SIG CONN	Arlington Hgts Rd. (Thomas to Central)	Awarded	0.044000
SIG CONN	Palatine Rd. (Shoenbeck to Wolf Roads)	Awarded	0.042500
SIG CONN	Western Ave. (US 30—Lakewood)	Awarded	0.018900
RS/INT IMP	North Ave. (I–290 to IL 43)	Awarded	0.056100
INT IMP	Plum Grove Rd. (At Higgins Road)	Awarded	0.010700
INT IMP	St Street (At Illinois)	Awarded	0.002700
RS/SIG MOD/INT IMP	Illinois/Grand (Kingsbury to Lake Shore Drive)	Done	0.004200
ADD TURN LANES	York Rd. (Industrial to Grand Ave.)	Done	0.003800
SERVICE IMP	SW Route Lane Service	Scheduled	0.005516
SIG INTCONN	Washington Street	Scheduled	0.030370
SIG INTCONN	IL 59	Scheduled	0.068650
ENGR	Citywide—Naperville		0.086230
SIG INTCONN	Washington Street	Scheduled	0.008230
SIG INTCONN	Lewis Ave. (Yorkhousse to ILL 173)	Scheduled	0.034600
SIG INTCONN	Schaumberg Rd. (Barrington to Martingale)	Scheduled	0.078080
Vanpool Program (94 vehicles)	Region-Wide Suburban	Done	0.134000
Transp. Center	North West Cook County	Done	0.032835
Transp. Center	Sears T.F.	Done	0.005805
Station	Clark/Lake	Done	0.010000
Station Recon	18 Th Douglas Line	Done	0.001500
Station Recon	Linden	Done	0.001500
Station Recon	Cottage Grove	Done	0.001300
Com. Pkg	Lisle	Done	0.010177
Com. Pkg	Jefferson Park	Done	0.000110
Com. Pkg	Edison Park	Done	0.003614
Com. Pkg	Palatine	Done	0.004336
Com. Pkg	Central Street	Done	0.000519
Com. Pkg	Palatine	Done	0.004890
Com. Pkg	Crystal Lake	Done	0.034948
Com. Pkg	137Th/Riverdale	Done	0.004565
Com. Pkg	River Forest	Done	0.000289
Com. Pkg	115Th/Kensington	Done	0.002795
Com. Pkg	119Th St	Done	0.004483
Com. Pkg	Wilmette	Done	0.001587
Com. Pkg	111Th St	Done	0.000507

TABLE 1—Continued

Project type	Location description	Completion status	SIP credit
Com. Pkg	Edison Park	Done	0.002371
Com. Pkg	Joliet	Done	0.003967
Com. Pkg	Hanover Park	Done	0.021799
Com. Pkg	Bartlett	Done	0.008911
Com. Pkg	Chicago Ridge	Done	0.002159
Com. Pkg	103 Rd St	Done	0.000675
Com. Pkg	Elmhurst	Done	0.003857
Com. Pkg	Bartlett	Done	0.009326
Com. Pkg	Morton Grove	Done	0.001444
Com. Pkg	Palatine	Done	0.003598
Com. Pkg	Harvard	Done	0.006299
Com. Pkg	Willow Springs	Done	0.001200
Com. Pkg	Edgebrook	Done	0.002240
Com. Pkg	Bensenville	Done	0.002010
Com. Pkg	Hanover Park	Done	0.015020
Com. Pkg	Midlothian	Done	0.002570
Com. Pkg	Route 59	Done	0.025020
Com. Pkg	Lake Forest (West)	Done	0.013780
Com. Pkg	Lombard	Done	.....
Com. Pkg	Elmhurst	Done	0.001010
Com. Pkg	Woodstock	Done	0.019000
Com. Pkg	University Park	Done	0.019950
Com. Pkg	Grayslake	Done	0.006210
Com. Pkg	Oak Forest	Done	0.004260
Com. Pkg	91 St St.	Done	0.003380
Com. Pkg	Lockport	Done	0.007360
Com. Pkg	Ravenswood	Done	0.000130
Com. Pkg	Hickory Creek	Done	0.060140
Com. Pkg	Cary	Done	0.005980
Com. Pkg	Blue Island	Done	0.019430
Com. Pkg	Lemont	Done	0.016200
Com. Pkg	Itasca	Done	0.003860
Com. Pkg	Maywood	Done	0.000600
Com. Pkg	Ivanhoe	Done	0.001960
Com. Pkg	Ravinia	Done	0.003210
Com. Pkg	Fox River Grove	Done	0.025170
Com. Pkg	Medinah	Done	0.012250
Com. Pkg	Hanover Park	Done	0.011840
Com. Pkg	Worth	Done	0.003530
Com. Pkg	Roselle	Done	0.007710
Com. Pkg	Crystal Lake	Done	0.015050
Com. Pkg	Gresham	Done	0.000300
Com. Pkg	Barrington	Done	0.002420
Rideshare Prog.	Regionwide	Scheduled	0.040000
Rapid Transit Service	Midway Airport	Done	0.220000
Transp. Center	Deerfield Lake-Cook	Done	0.004160
Station Recon	Davis St.	Done	0.004000
Station Recon	Addison	Done	0.004000
Station Recon	King Drive	Done	0.003000
Station Recon	Washington/Wells	Done	0.003000
Com. Pkg	Cary	Done	0.027910
Com. Pkg	Morton Grove	Done	0.002460
Com. Pkg	80th Ave.	Scheduled	0.043200
Com. Pkg	Round Lake	Done	0.015150
Com. Pkg	Grayslake	Done	0.009170
Com. Pkg	Ingleside	Scheduled	0.005430
Com. Pkg	Schamburg	Scheduled	0.042090
Com. Pkg	Oak Forest	Scheduled	0.004680
Com. Pkg	Lake Cook	Scheduled	0.026390
Com. Pkg	Grayslake	Scheduled	0.035290

(k) Approval—EPA is approving the section 182(f) oxides of nitrogen (NO_X) reasonably available control technology (RACT), new source review (NSR), vehicle inspection/maintenance (I/M), and general conformity exemptions for the Illinois portion of the Chicago-Gary-Lake County severe ozone nonattainment area as requested by the States of Illinois, Indiana, Michigan, and Wisconsin in a July 13, 1994 submittal. This approval does not

cover the exemption of NO_X transportation conformity requirements of section 176(c) for this area. Approval of these exemptions is contingent on the results of the final ozone attainment demonstration expected to be submitted in mid-1997. The approval will be modified if the final attainment demonstration demonstrates that NO_X emission controls are needed in the nonattainment area to attain the ozone standard in the Lake Michigan Ozone Study modeling domain.

(l) Approval—The United States Environmental Protection Agency is approving under section 182(b)(1) of the Clean Air Act the exemption of the Chicago severe, ozone nonattainment area from the build/no-build and less than-1990 interim transportation conformity oxides of nitrogen requirements as requested by the State of Illinois in a June 20, 1995 submittal. In light of the modeling completed thus far and considering the importance of the OTAG process and attainment plan modeling efforts, USEPA grants this NO_X waiver on a contingent basis. As the OTAG modeling results and control recommendations are completed in 1996, this information will be incorporated into attainment plans being developed by the LADCO States. When these attainment plans are submitted to USEPA in mid-1997, these new modeling analyses will be reviewed to determine if the NO_X waiver should be continued, altered, or removed. USEPA's rulemaking action to reconsider the initial NO_X waiver may occur simultaneously with rulemaking action on the attainment plans. The USEPA also reserves the right to require NO_X emission controls for transportation sources under section 110(a)(2)(D) of the Act if future ozone modeling demonstrates that such controls are needed to achieve the ozone standard in downwind areas. The Chicago severe ozone nonattainment area includes the Counties of Cook, DuPage, Grundy (Aux Sable and Gooselake Townships), Kane, Kendall (Oswego Township), Lake, McHenry, and Will.

[45 FR 55197, Aug. 19, 1980, as amended at 45 FR 62810, Sept. 22, 1980; 47 FR 26620, June 21, 1982; 50 FR 5250, Feb. 2, 1985; 52 FR 26012, July 10, 1987; 53 FR 40426, Oct. 17, 1988; 55 FR 21751, May 29, 1990; 55 FR 26909, June 29, 1990; 58 FR 3844, Jan. 12, 1993; 59 FR 9092, Feb. 25, 1994; 59 FR 64855, Dec. 16, 1994; 60 FR 13634, Mar. 14, 1995; 60 FR 13635, Mar. 14, 1995; 60 FR 48899, Sept. 21, 1995; 61 FR 2437, Jan. 26, 1996; 61 FR 5295, Feb. 12, 1996]

§52.727 [Reserved]

§52.728 Control strategy: Nitrogen dioxide. [Reserved]

§52.729 [Reserved]

§52.730 Compliance schedules.

(a) The requirements of §51.262(a) of this chapter are not met since compliance schedules with adequate increments of progress have not been submitted for every source for which they are required.

(b) Federal compliance schedules. (1) Except as provided in paragraph (b)(3) of this section, the owner or operator of any stationary source subject to the following emission limiting regulations in the Illinois implementation plan shall comply with the applicable compliance schedule in paragraph (b)(2) of this section: Illinois Air Pollution Control Regulations Rule 203(d)(4), 203(d)(6)(B)(ii)(bb), 203(g)(1)(B), 203(g)(2), 203(g)(3), 203(g)(4), 204(c)(1)(A), 204(c)(2), 204(d), and 204(e).

(2) *Compliance schedules.* (i) The owner or operator of any stationary source subject to Illinois Air Pollution Control Regulation Rule 203(d)(4) shall take the following actions with respect to the source no later than the date specified.

(*a*) September 30, 1973—Advertise for bids for purchase and construction or installation of equipment, or for materials requisite for process modification sufficient to control particulate emissions from the source.

(*b*) November 15, 1973—Award contracts for emission control systems or process modification, or issue orders

for the purchase of component parts to accomplish emission control or process modification.

(*c*) May 31, 1974—Initiate onsite construction or installation of emission control system or process modification.

(*d*) March 31, 1975—Complete onsite construction or installation of emission system or process modification.

(*e*) May 31, 1975—Complete shakedown operation and performance test on source, submit performance test results to the Administrator; achieve full compliance with State agency regulation.

(ii) The owner or operator of any stationary source subject to Illinois Air Pollution Control Regulation Rule 203(d)(6)(B)(ii)(bb) shall take the following actions with respect to the source no later than the date specified.

(*a*) September 30, 1973—Advertise for bids for purchase and construction or for modification of equipment sufficient to control particulate emissions from the source.

(*b*) November 15, 1973—Award contracts for emissions control systems or process modification, or issue orders for the purchase of component parts to accomplish emission control or process modification.

(*c*) March 31, 1974—Initiate onsite construction or installation of emission control system.

(*d*) October 31, 1974—Complete onsite construction or installation of emission control system.

(*e*) December 31, 1974—Achieve final compliance with Illinois Air Pollution Control Regulations Rule 203(d)(6)(B)(ii)(bb).

(iii) (*a*) The owner or operator of any boiler or furnace of more than 250 million BTU per hour heat input subject to Illinois Air Pollution Control Regulation Rule 204(c)(1)(A), 204(c)(2), 204(d), and 204(e) shall notify the Administrator, no later than October 1, 1973, of his intent to utilize either low-sulfur fuel or stack gas desulfurization to the requirements of said regulation.

(*b*) Any owner or operator of a stationary source subject to paragraph (b)(2)(iii)(*a*) of this section who elects to utilize low sulfur fuel shall take the following actions with respect to the source no later than the date specified.

(*1*) November 1, 1973—Submit to the Administrator a projection of the amount of fuel, by types, that will be substantially adequate to enable compliance with Illinois Air Pollution Control Regulations Rule 204(c)(1)(A), 204(c)(2), 204(d), and 204(e) on May 31, 1975, and for at least one year thereafter.

(*2*) December 31, 1973—Sign contracts with fuel suppliers for fuel requirements as projected above.

(*3*) January 31, 1974—Submit a statement as to whether boiler modifications will be required. If modifications will be required, submit plans for such modifications.

(*4*) March 15, 1974—Let contracts for necessary boiler modifications, if applicable.

(*5*) June 15, 1974—Initiate onsite modifications, if applicable.

(*6*) March 31, 1975—Complete onsite modifications, if applicable.

(*7*) May 31, 1975—Final compliance with the emission limitation of Rules 204(c)(1)(A), 204(c)(2), 204(d), and 204(e).

(*c*) Any owner or operator of a fuel combustion source subject to paragraph (b)(2)(iii)(*a*) of this section who elects to utilize stack gas desulfurization shall take the following actions with respect to the source no later than the date specified.

(*1*) November 1, 1973—Let necessary contracts for construction.

(*2*) March 31, 1974—Initiate onsite construction.

(*3*) March 31, 1975—Complete onsite construction.

(*4*) May 31, 1975—Complete shakedown operations and performance test on source, submit performance test results to the Administrator; achieve full compliance with Rule 204(c)(1)(A), 204(c)(2), 204(d), and 204(e).

(iv) (*a*) The owner or operator of any stationary source subject to Illinois Air Pollution Control Regulations Rule 203(g)(1)(B), 203(g)(2), 203(g)(3), and 203(g)(4) shall notify the Administrator, no later than October 1, 1973, of his intent to utilize either low ash fuel or a stack gas cleaning system to meet the requirements of said regulation.

(*b*) Any owner or operator of a stationary source subject to paragraph (b)(2)(iv)(*a*) of this section who elects to utilize low ash fuel shall take the

following actions with respect to the source no later than the date specified.

(*1*) November 1, 1973—Submit to the Administrator a projection of the amount of fuel, by types, that will be substantially adequate to enable compliance with Illinois Air Pollution Control Regulations Rule 203(g)(1)(B), 203(g)(2), 203(g)(3), and 203(g)(4) on May 31, 1975, and for at least one year thereafter.

(*2*) December 31, 1973—Sign contracts with fuel suppliers for fuel requirements as projected above.

(*3*) January 31, 1974—Submit a statement as to whether boiler modifications will be required. If modifications will be required, submit plans for such modifications.

(*4*) March 15, 1974—Let contracts for necessary boiler modifications, if applicable.

(*5*) June 15, 1974—Initiate onsite modifications, if applicable.

(*6*) March 31, 1975—Complete onsite modifications, if applicable.

(*7*) May 31, 1975—Final compliance with the emission limitation of Rule 203(g)(1)(B), 203(g)(2), 203(g)(3), and 203(g)(4).

(*c*) Any owner or operator of a stationary source subject to paragraph (b)(2)(iv)(*a*) of this section who elects to utilize a stack gas cleaning system shall take the following actions with respect to the source no later than the date specified.

(*1*) January 15, 1974—Let necessary contracts for construction.

(*2*) April 1, 1974—Initiate onsite construction.

(*3*) April 1, 1975—Complete onsite construction.

(*4*) May 31, 1975—Complete shakedown operations and performance tests on source, submit performance test results to the Administrator; achieve full compliance with Rule 203(g)(1)(B), 203(g)(2), 203(g)(3), and 203(g)(4).

(v) Ten days prior to the conduct of any performance test required by this paragraph, the owner or operator of the affected source shall give notice of such test to the Administrator to afford him the opportunity to have an observer present.

(vi) Any owner or operator subject to a compliance schedule above shall certify to the Administrator, within five days after the deadline for each increment of progress in that schedule, whether or not the increment has been met.

(3)(i) None of the above paragraphs shall apply to a source which is presently in compliance with applicable regulations and which has certified such compliance to the Administrator by October 1, 1973. The Administrator may request whatever supporting information he considers necessary for proper certification.

(ii) Any compliance schedule adopted by the State and approved by the Administrator shall satisfy the requirements of this paragraph for the affected source.

(iii) Any owner or operator subject to a compliance schedule in this paragraph may submit to the Administrator no later than October 1, 1973, a proposed alternative compliance schedule. No such compliance schedule may provide for final compliance after the final compliance date in the applicable compliance schedule of this paragraph. If promulgated by the Administrator, such schedule shall satisfy the requirements of this paragraph for the affected source.

(4) Nothing in this paragraph shall preclude the Administrator from promulgating a separate schedule for any source to which the application of the compliance schedules in paragraph (b)(2) of this section fail to satisfy the requirements of §§ 51.261 and 51.262(a) of this chapter.

(c) [Reserved]

(d) The compliance schedules for the sources identified below are disapproved as not meeting the requirements of subpart N of this chapter. All regulations cited are air pollution control regulations of the State, unless otherwise noted.

Source	Location	Regulation involved	Date schedule adopted
CHRISTIAN COUNTY			
Allied Mills, Inc	Taylorville	204(c)	Feb. 28, 1973.
COOK COUNTY			
Harco Aluminum Inc	Chicago	204(c)	Dec. 9, 1973.
J. L. Clark Manufacturing Co	Downers Grove	205(f)	May 4, 1973.
Johnson & Johnson	Bedford Park	205(f)	Jun. 20, 1973.
Lloyd J. Harris Pie, Co. Inc	Chicago	204(c)	Feb. 27, 1973.
Union Oil Co. of California	.....do	204(c)	Jun. 19, 1973,
(a) No. 10 boiler			Dec. 13, 1973.
(b) 11BIA crude heater.			
W. H. Hutchingson & Son, Inc	.....do	205(f)	Aug. 12, 1973.
Western Rust Proof Co	.....do	204(c)	Oct. 10, 1973.
Wheeler Uniform Service Inc	.....do	204(c)	May 22, 1973.
Wm. Yuenger Manufacturing Co	.....do	204(c)	Aug. 16, 1973.
World's Finest Chocolate Inc	.....do	204(c)	May 30, 1973.
JACKSON COUNTY			
Tuck Industries, Inc	Carbondale	204(c)	Jun. 20, 1973.
KANE COUNTY			
All Steel Equipment Corp	Montgomery	204(f)	July 24, 1973.
Consolidated Food Inc	Aurora	205(f)	May 9, 1973.
LAKE COUNTY			
Morton Manufacturing Co	Libertyville	205(f)	Aug. 27, 1973.
LA SALLE COUNTY			
Allied Mills Inc	Mendota	204(c)	May 28, 1973.
MADISON COUNTY			
Clark Oil & Refining Corp	Hartford	204(f)	Feb. 22, 1973.
Granite City Steel Co	Granite City	203(d)(6)	Apr. 25, 1972.
(a) Coke oven pushing operations			as amended.
(b) Charging operations			May 21, 1973.
Illinois Power Company (Wood River Boiler No. 5)	E. Alton	204(c)	May 1, 1973.
Owens-Illinois Inc	Madison	204(c)	May 2, 1973.
Owen-Illinois Inc. (No. 2 Powerhouse)	Alton	204(c)	Mar. 30, 1973.
Shell Oil Co. (Cat. Cracker Units Nos. 1, 2)	Roxana	203(b)	Nov. 27, 1972.
RANDOLF COUNTY			
Chester Dairy Co	Chester	204(c)	Aug. 6, 1973.
ST. CLAIR COUNTY			
Lock Stove Co	East St. Louis	205(b)	June 11, 1973.
TAZEWELL COUNTY			
Quaker Oats Co	Pekin	204(c)	May 24, 1973.
VERMILLION COUNTY			
Lauhoff Grain Co	Danville	204(c)	Mar. 31, 1973.

[38 FR 16145, June 20, 1973, as amended at 38 FR 22742, Aug. 23, 1973; 38 FR 24342, Sept. 7, 1973; 39 FR 28155, Aug. 5, 1974; 51 FR 40675, 40676, 40677, Nov. 7, 1986; 54 FR 25258, June 14, 1989]

§§52.731–52.735 [Reserved]

§52.736 Review of new sources and modifications.

(a) [Reserved]

(b) The rules submitted by the State on March 24, 1988, to satisfy the requirements of the Clean Air Act are approved. These rules are part 203: Major Stationary Sources Construction and Modification as effective March 22, 1991. The moratorium on construction and modification of new sources in nonattainment areas as provided in section 110(a)(2)(I) of the Clean Air Act is revoked.

[57 FR 59935, Dec. 17, 1992]

§52.737 Operating permits.

Emission limitation and other provisions contained in operating permits issued by the State in accordance with the provisions of the federally approved permit program shall be the applicable requirements of the federally approved Illinois SIP for the purpose of section 113 of the Clean Air Act and shall be enforceable by USEPA and by any person in the same manner as other requirements of the SIP. USEPA reserves the right to deem an operating permit not federally enforceable. Such a determination will be made according to appropriate procedures, and be based upon the permit, permit approval procedures or permit requirements which do not conform with the operating permit program requirements or the requirements of USEPA's underlying regulations.

[57 FR 59936, Dec. 17, 1992]

§52.738 Significant deterioration of air quality.

(a) The requirements of sections 160 through 165 of the Clean Air Act are not met, since the plan does not include approvable procedures for preventing the significant deterioration of air quality.

(b) *Regulations for preventing significant deterioration of air quality*. The provisions of §52.21(b) through (w) are hereby incorporated and made a part of the applicable state plan for the State of Illinois.

(c) All applications and other information required pursuant to §52.21 from sources located in the State of Illinois shall be submitted to the Director of the Illinois Environmental Protection Agency, 2200 Churchill Road, Springfield, Illinois 62706 instead of the EPA Region V office.

[45 FR 52741, Aug. 7, 1980, as amended at 46 FR 9584, Jan. 29, 1981]

§52.739 Permit fees.

(a) The requirements of section 110(a)(2)(K) of the Clean Air Act as amended in 1977 are not met since the state has not submitted to EPA, as a part of its State Implementation Plan, provisions for a permit fee system.

[46 FR 23237, Apr. 24, 1981]

§52.740 Interstate pollution.

(a) The requirements of section 126(a)(2) of the Clean Air Act as amended in 1977 are not met since the state has not submitted to EPA, as a part of its State Implementation Plan, the procedures on which the state is relying to notify nearby states of any proposed major stationary source which may significantly contribute to levels of air pollution in excess of the National Ambient Air Quality Standards in that state.

[46 FR 23237, Apr. 24, 1981]

§52.741 Control strategy: Ozone control measures for Cook, DuPage, Kane, Lake, McHenry and Will Counties.

(a) *General Provisions*—(1) *Abbreviations and conversion factors*. (i) The following abbreviations are used in §52.741:

ASTM	American Society for Testing and Materials.
bbl	barrels (42 gallons).
°C	degrees Celsius or centigrade.
cm	centimeters.
cu in.	cubic inches.
°F	degrees Fahrenheit.
FIP	Federal implementation plan.
ft	feet.
ft^2	square feet.
g	grams.
gpm	gallons per minute.
g/mole	grams per mole.
gal	gallons.
hr	hours.
in	inches.
K	degrees Kelvin.
kcal	kilocalories.

kg	kilograms.
kg/hr	kilograms per hour.
kPa	kilopascals; one thousand newtons per square meter.
l	liters.
l/sec	liters per second.
lbs	pounds.
lbs/hr	pounds per hour.
lbs/gal	pounds per gallon.
LEL	lower explosive limit.
m	meters.
m^2	square meters.
m^3	cubmic meters.
mg	milligrams.
Mg	Megagrams, metric tons or tonnes.
ml	milliliters.
min	minutes.
MJ	megajoules.
mm Hg	millimeters of mercury.
ppm	parts per million.
ppmv	parts per million by volume.
psi	pounds per square inch.
psia	pounds per square inch absolute.
psig	pounds per square inch gauge.
scf	standard cubic feet.
scm	standard cubic meters.
sec	seconds.
SIP	State implementation plan.
sq cm	square centimeters.
sq in	square inches.
USEPA	United States Environmental Protection Agency.
VOC	volatile organic compounds.
VOL	volatile organic liquids.
VOM	volatile organic materials.

(ii) The following conversion factors are used in § 52.741.

English	Metric
1 gal	3.785 l.
1,000 gal	3,785 l or 3.785 m^3.
1 psia	6.897 kPa (51.71 mm Hg).
2.205 lbs	1 kg.
1 bbl	159.0 l.
1 cu in	16.39 ml.
1 lb/gal	119,800 mg/l.
1 ton	0.907 Mg.

(2) *Applicability*. Effective October 11, 1994 Illinois Administrative Code Title 35: Environmental Protection, Subtitle B: Air Pollution, Chapter I: Pollution Control Board, Subchapter c: Emissions Standards and Limitations for Stationary Sources, Part 218: Organic Materials Emissions Standards and Limitations for the Chicago Area replaces the requirements of 40 CFR 52.741 Control strategy: Ozone control measures for Cook, DuPage, Kane, Lake, McHenry and Will County as the federally enforceable control measures in these counties except as noted in paragraphs (a)(2)(i) through (iii) of this section.

(i) Illinois' major non-CTG sources in the Chicago area, subject to paragraph u, v, w, or x because of the applicability criteria in these paragraphs, continue to be subject to paragraphs u, v, w, x, and in addition they remain subject to the recordkeeping requirements in paragraph y and any related parts of section 52.741 necessary to implement these paragraphs, e.g., those paragraphs containing test methods, definitions, etc.

(ii) In accordance with section 218.101(b), all FIP requirements remain in effect (and are enforceable after October 11, 1994 for the period prior to October 11, 1994).

(iii) Any source that received a stay, as indicated in section 218.103(a)(2), remains subject to the stay if still in effect, or (if the stayis no longer in effect) the federally promulgated rule applicable to such source.

(3) *Definitions*. The following terms are defined for the purpose of § 52.741.

NOTE: The Federal definitions supersede the State definitions for these terms, which were previously approved by USEPA as part of the SIP. The federally approved definitions for all other terms remain in effect and applicable to these Federal rules.

Accelacota means a pharmaceutical coating operation which consists of a horizontally rotating perforated drum in which tablets are placed, a coating is applied by spraying, and the coating is dried by the flow of air across the drum through the perforations.

Accumulator means the reservoir of a condensing unit receiving the condensate from a surface condenser.

Actual emissions means the actual quantity of VOM emissions from an emission source during a particular time period.

Adhesive means any substance or mixture of substances intended to serve as a joining compound.

Administrator means the Administrator of the USEPA or that person's designee.

Afterburner means a control device in which materials in gaseous effluent are combusted.

Air contaminant means any solid, liquid, or gaseous matter, any odor, or any form of energy, that is capable of

being released into the atmosphere from an emission source.

Air dried coatings means any coatings that dry by use of air or forced air at temperatures up to 363.15 K (194 °F).

Air pollution means the presence in the atmosphere of one or more air contaminants in sufficient quantities and of such characteristics and duration as to be injurious to human, plant, or animal life, to health, or to property, or to unreasonably interfere with the enjoyment of life or property.

Air pollution control equipment means any equipment or facility of a type intended to eliminate, prevent, reduce or control the emission of specified air contaminants to the atmosphere.

Air suspension coater/dryer means a pharmaceutical coating operation which consists of vertical chambers in which tablets or particles are placed, and a coating is applied and then dried while the tablets or particles are kept in a fluidized state by the passage of air upward through the chambers.

Air-assisted airless spray means a spray coating method which combines compressed air with hydraulic pressure to atomize the coating material into finer droplets than is achieved with pure airless spray. Lower hydraulic pressure is used than with airless spray.

Airless spray means a spray coating method in which the coating is atomized by forcing it through a small opening at high pressure. The coating liquid is not mixed with air before exiting from the nozzle.

Allowable emissions means the quantity of VOM emissions during a particular time period from a stationary source calculated using the maximum rated capacity of the source (unless restricted by federally enforceable limitations on operating rate, hours of operation, or both) and the most stringent of:

(A) The applicable standards in 40 CFR parts 60 and 61:

(B) The applicable implementation plan; or

(C) A federally enforceable permit.

Ambient air quality standards means those standards designed to protect the public health and welfare codified in 40 CFR part 50 and promulgated from time to time by the USEPA pursuant to authority contained in Section 108 of the Clean Air Act, 42 U.S.C. 7401 *et seq.*, as amended from time to time.

Applicator means a device used in a coating line to apply coating.

As applied means the exact formulation of a coating during application on or impregnation into a substrate.

Asphalt means the dark-brown to black cementitious material (solid, semisolid, or liquid in consistency) of which the main constituents are bitumens which occur naturally or as a residue of petroleum refining.

Automobile means a motor vehicle capable of carrying no more than 12 passengers.

Automobile or light-duty truck assembly plant means a facility where parts are assembled or finished for eventual inclusion into a finished automobile or light-duty truck ready for sale to vehicle dealers, but not including customizers, body shops, and other repainters.

Automobile or light-duty truck refinishing means the repainting of used automobiles and light-duty trucks.

Baked coatings means any coating which is cured or dried in an oven where the oven air temperature exceeds 90°C (194°F).

Binders means organic materials and resins which do not contain VOM's.

Bituminous coatings means black or brownish coating materials which are soluble in carbon disulfide, which consist mainly of hydrocarbons, and which are obtained from natural deposits or as residues from the distillation of crude oils or of low grades of coal.

Brush or wipe coating means a manual method of applying a coating using a brush, cloth, or similar object.

Bulk gasoline plant means a gasoline storage and distribution facility with an average throughput of 76,000 l (20,000 gal) or less on a 30-day rolling average that distributes gasoline to gasoline dispensing facilities.

Can means any metal container, with or without a top, cover, spout or handles, into which solid or liquid materials are packaged.

Can coating means any coating applied on a single walled container that is manufactured from metal sheets thinner than 29 gauge (0.0141 in.).

Can coating facility means a facility that includes one or more can coating line(s).

Can coating line means a coating line in which any protective, decorative, or functional coating is applied onto the surface of cans or can components.

Capture means the containment or recovery of emissions from a process for direction into a duct which may be exhausted through a stack or sent to a control device. The overall abatement of emissions from a process with an add-on control device is a function both of the capture efficiency and of the control device.

Capture device means a hood, enclosed room floor sweep or other means of collecting solvent or other pollutants into a duct. The pollutant can then be directed to a pollution control device such as an afterburner or carbon adsorber. Sometimes the term is used loosely to include the control device.

Capture efficiency means the fraction of all VOM generated by a process that are directed to an abatement or recovery device.

Capture system means all equipment (including, but not limited to, hoods, ducts, fans, ovens, dryers, etc.) used to contain, collect and transport an air pollutant to a control device.

Clean Air Act means the Clean Air Act of 1963, as amended, including the Clean Air Act Amendments of 1977, (42 U.S.C. 7401 *et seq.*).

Clear coating means coatings that lack color and opacity or are transparent using the undercoat as a reflectant base or undertone color.

Clear topcoat means the final coating which contains binders, but not opaque pigments, and is specifically formulated to form a transparent or translucent solid protective film.

Closed vent system means a system that is not open to the atmosphere and is composed of piping, connections, and, if necessary, flow inducing devices that transport gas or vapor from an emission source to a control device.

Coating means a material applied onto or impregnated into a substrate for protective, decorative, or functional purposes. Such materials include, but are not limited to, paints, varnishes, sealers, adhesives, thinners, diluents, and inks.

Coating applicator means equipment used to apply a coating.

Coating line means an operation consisting of a series of one or more coating applicators and any associated flash-off areas, drying areas, and ovens wherein a surface coating is applied, dried, or cured. (It is not necessary for an operation to have an oven, or flash-off area, or drying area to be included in this definition.)

Coating plant means any plant that contains one or more coating line(s).

Coil means any flat metal sheet or strip that is rolled or wound in concentric rings.

Coil coating means any coating applied on any flat metal sheet or strip that comes in rolls or coils.

Coil coating facility means a facility that includes one or more coil coating line(s).

Coil coating line means a coating line in which any protective, decorative or functional coating is applied onto the surface of flat metal sheets, strips, rolls, or coils for industrial or commercial use.

Cold cleaning means the process of cleaning and removing soils from surfaces by spraying, brushing, flushing, or immersion while maintaining the organic solvent below its boiling point. Wipe cleaning is not included in this definition.

Component means, with respect to synthetic organic chemical and polymer manufacturing equipment, and petroleum refining and related industries, any piece of equipment which has the potential to leak VOM including, but not limited to, pump seals, compressor seals, seal oil degassing vents, pipeline valves, pressure relief devices, process drains, and open ended pipes. This definition excludes valves which are not externally regulated, flanges, and equipment in heavy liquid service. For purposes of paragraph (i) of this section, this definition also excludes bleed ports of gear pumps in polymer service.

Concrete curing compounds means any coating applied to freshly poured concrete to retard the evaporation of water.

Condensate means volatile organic liquid separated from its associated gases, which condenses due to changes

in the temperature or pressure and remains liquid at standard conditions.

Continuous process means, with respect to polystyrene resin, a method of manufacture in which the styrene raw material is delivered on a continuous basis to the reactor in which the styrene is polymerized to polystyrene.

Control device means equipment (such as an afterburner or adsorber) used to remove or prevent the emission of air pollutants from a contaminated exhaust stream.

Control device efficiency means the ratio of pollution prevented by a control device and the pollution introduced to the control device, expressed as a percentage.

Conveyorized degreasing means the continuous process of cleaning and removing soils from surfaces utilizing either cold or vaporized solvents.

Crude oil means a naturally occurring mixture which consists of hydrocarbons and sulfur, nitrogen, or oxygen derivatives of hydrocarbons and which is a liquid at standard conditions.

Crude oil gathering means the transportation of crude oil or condensate after custody transfer between a production facility and a reception point.

Custody transfer means the transfer of produced petroleum and/or condensate after processing and/or treating in the producing operations, from storage tanks or automatic transfer facilities to pipelines or any other forms of transportation.

Daily-weighted average VOM content means the average VOM content of two or more coatings as applied on a coating line during any day, taking into account the fraction of total coating volume that each coating represents, as calculated with the following equation:

$$VOM_w = [\sum_{i=1}^{n} V_i C_i]/V_T$$

where:

VOM_w=The average VOM content of two or more coatings as applied each day on a coating line in units of kg VOM/l (lbs VOM/gal) of coating (minus water and any compounds which are specifically exempted from the definition of VOM),

n=The number of different coatings as applied each day on a coating line,

V_i=The volume of each coating (minus water and any compounds which are specifically exempted from the definition of VOM) as applied each day on a coating line in units of l (gal).

C_i=The VOM content of each coating as applied each day on a coating line in units of kg VOM/l (lbs VOM/gal) of coating (minus water and any compounds which are specifically exempted from the definition of VOM), and

V_T=The total volume of all coatings (minus water and any compounds which are specifically exempted from the definition of VOM) as applied each day on a coating line in units of l (gal).

Day means the consecutive 24 hours beginning at 12 a.m. (midnight) local time.

Degreaser means any equipment or system used in solvent cleaning.

Delivery vessel means any tank truck or trailer equipped with a storage tank that is used for the transport of gasoline to a stationary storage tank at a gasoline dispensing facility, bulk gasoline plant, or bulk gasoline terminal.

Dip coating means a method of applying coatings in which the part is submerged in a tank filled with the coating.

Drum means any cylindrical metal shipping container of 13- to 110-gallon capacity.

Electrostatic bell or disc spray means an electrostatic spray coating method in which a rapidly-spinning bell- or disc-shaped applicator is used to create a fine mist and apply the coating with high transfer efficiency.

Electrostatic spray means a spray coating method in which opposite electrical charges are applied to the substrate and the coating. The coating is attracted to the object due to the electrostatic potential between them.

Emission source and source mean any facility from which VOM is emitted or capable of being emitted into the atmosphere.

Enamel means a coating that cures by chemical cross-linking of its base resin. Enamels can be distinguished from lacquers because enamels are not readily resoluble in their original solvent.

Enclose means to cover any VOL surface that is exposed to the atmosphere.

End sealing compound coat means a compound applied to can ends which functions as a gasket when the end is assembled onto the can.

Excessive release means a discharge of more than 295 g (0.65 lbs) of mercaptans and/or hydrogen sulfide into the atmosphere in any 5-minute period.

Exterior base coat means a coating applied to the exterior of a can body, or flat sheet to provide protection to the metal or to provide background for any lithographic or printing operation.

Exterior end coat means a coating applied to the exterior end of a can to provide protection to the metal.

External-floating roof means a cover over an open top storage tank consisting of a double deck or pontoon single deck which rests upon and is supported by the volatile organic liquid being contained and is equipped with a closure seal or seals to close the space between the roof edge and tank shell.

Extreme environmental conditions means exposure to any or all of the following: ambient weather conditions; temperatures consistently above 95 °C (203 °F); detergents; abrasive and scouring agents; solvents; or corrosive atmospheres.

Extreme performance coating means any coating which during intended use is exposed to extreme environmental conditions.

Fabric coating means any coating applied on textile fabric. Fabric coating includes the application of coatings by impregnation.

Fabric coating facility means a facility that includes one or more fabric coating lines.

Fabric coating line means a coating line in which any protective, decorative, or functional coating or reinforcing material is applied on or impregnated into a textile fabric.

Federally enforceable means all limitations and conditions which are enforceable by the Administrator including those requirements developed pursuant to 40 CFR parts 60 and 61; requirements within any applicable implementation plan; and any permit requirements established pursuant to 40 CFR 52.21 or under regulations approved pursuant to 40 CFR part 51 subpart I and 40 CFR 51.166.

Final repair coat means the repainting of any topcoat which is damaged during vehicle assembly.

Firebox means the chamber or compartment of a boiler or furnace in which materials are burned, but not the combustion chamber or afterburner of an incinerator.

Fixed-roof tank means a cylindrical shell with a permanently affixed roof.

Flexographic printing means the application of words, designs, and pictures to a substrate by means of a roll printing technique in which the pattern to be applied is raised above the printing roll and the image carrier is made of elastomeric materials.

Flexographic printing line means a printing line in which each roll printer uses a roll with raised areas for applying an image such as words, designs, or pictures to a substrate. The image carrier on the roll is made of rubber or other elastome

Floating roof means a roof on a stationary tank, reservoir, or other container which moves vertically upon change in volume of the stored material.

Fountain solution means the solution which is applied to the image plate to maintain hydrophilic properties of the non-image areas.

Fuel combustion emission source means any furnace, boiler, or similar equipment used for the primary purpose of producing heat or power by indirect heat transfer.

Fuel gas system means a system for collection of refinery fuel gas including, but not limited to, piping for collecting tail gas from various process units, mixing drums and controls, and distribution piping.

Gas/gas method means either of two methods for determining capture which rely only on gas phase measurements. The first method requires construction of a temporary total enclosure (TTE) to ensure that all would-be fugitive emissions are measured. The second method uses the building or room which houses the facility as an enclosure. The second method requires that all other VOM sources within the room be shut down while the test is performed, but all fans and blowers within the room must be operated according to normal procedures.

Gas service means that the component contains process fluid that is in the gaseous state at operating conditions.

Gasoline means any petroleum distillate or petroleum distillate/alcohol blend having a Reid vapor pressure of 27.6 kPa or greater which is used as a fuel for internal combustion engines.

Gasoline dispensing facility means any site where gasoline is transferred from a stationary storage tank to a motor vehicle gasoline tank used to provide fuel to the engine of that motor vehicle.

Gross vehicle weight means the manufacturer's gross weight rating for the individual vehicle.

Gross vehicle weight rating means the value specified by the manufacturer as the maximum design loaded weight of a single vehicle.

Heated airless spray means an airless spray coating method in which the coating is heated just prior to application.

Heatset means a class of web-offset lithography which requires a heated dryer to solidify the printing inks.

Heatset-web-offset lithographic printing line means a lithographic printing line in which a blanket cylinder is used to transfer ink from a plate cylinder to a substrate continuously fed from a roll or an extension process and an oven is used to solidify the printing inks.

Heavy liquid means liquid with a true vapor pressure of less than 0.3 kPa (0.04 psi) at 294.3 K (70 °F) established in a standard reference text or as determined by ASTM method D2879–86 (incorporated by reference as specified in 40 CFR 52.742); or which has 0.1 Reid Vapor Pressure as determined by ASTM method D323–82 (incorporated by reference as specified in 40 CFR 52.742); or which when distilled requires a temperature of 421.95 K (300 °F) or greater to recover 10 percent of the liquid as determined by ASTM method D86–82 (incorporated by reference as specified in 40 CFR 52.742).

Heavy off-highway vehicle products means, for the purpose of paragraph (e) of this section, heavy construction, mining, farming, or material handling equipment; heavy industrial engines; diesel-electric locomotives and associated power generation equipment; and the components of such equipment or engines.

Heavy off-highway vehicle products coating facility means a facility that includes one or more heavy off-highway vehicle products coating line(s).

Heavy off-highway vehicle products coating line means a coating line in which any protective, decorative, or functional coating is applied onto the surface of heavy off-highway vehicle products.

High temperature aluminum coating means a coating that is certified to withstand a temperature of 537.8 °C (1000 °F) for 24 hours.

Hood means a partial enclosure or canopy for capturing and exhausting, by means of a draft, the organic vapors or other fumes rising from a coating process or other source.

Hood capture efficiency means the emissions from a process which are captured by the hood and directed into a control device, expressed as a percentage of all emissions.

Hot well means the reservoir of a condensing unit receiving the condensate from a barometric condenser.

Hour means a block period of 60 minutes (*e.g.*, 1 a.m. to 2 a.m.).

In vacuum service means, for the purpose of paragraph (i) of this section, equipment which is operating at an internal pressure that is at least 5 kPa (0.73 psia) below ambient pressure.

In-process tank means a container used for mixing, blending, heating, reacting, holding, crystallizing, evaporating or cleaning operations in the manufacture of pharmaceuticals.

Incinerator means a combustion apparatus in which refuse is burned.

Indirect heat transfer means transfer of heat in such a way that the source of heat does not come into direct contact with process materials.

Ink means a coating used in printing, impressing, or transferring an image onto a substrate.

Interior body spray coat means a coating applied by spray to the interior of a can body.

Internal-floating roof means a cover or roof in a fixed-roof tank which rests upon and is supported by the volatile organic liquid being contained and is equipped with a closure seal or seals to

close the space between the roof edge and tank shell.

Lacquers means any clear wood finishes formulated with nitrocellulose or synthetic resins to dry by evaporation without chemical reaction, including clear lacquer sanding sealers.

Large appliance means any residential and commercial washers, dryers, ranges, refrigerators, freezers, water heaters, dish washers, trash compactors, air conditioners, and other similar products.

Large appliance coating means any coating applied to the component metal parts (including, but not limited to, doors, cases, lids, panels, and interior support parts) of residential and commercial washers, dryers, ranges, refrigerators, freezers, water heaters, dish washers, trash compactors, air conditioners, and other similar products.

Large appliance coating facility means a facility that includes one or more large appliance coating line(s).

Large appliance coating line means a coating line in which any protective, decorative, or functional coating is applied onto the surface of large appliances.

Light liquid means VOM in the liquid state which is not defined as heavy liquid.

Light-duty truck means any motor vehicle rated at 3,850 kg gross vehicle weight or less, designed mainly to transport property.

Liquid/gas method means either of two methods for determining capture which require both gas phase and liquid phase measurements and analysis. The first method requires construction of a TTE. The second method uses the building or room which houses the facility as an enclosure. The second method requires that all other VOM sources within the room be shut down while the test is performed, but all fans and blowers within the room must be operated according to normal procedures.

Liquid service means that the equipment or component contains process fluid that is in a liquid state at operating conditions.

Lithographic printing line means a printing line, except that the substrate is not necessarily fed from an unwinding roll, in which each roll printer uses a roll where both the image and non-image areas are essentially in the same plane (planographic).

Magnet wire means aluminum or copper wire formed into an electromagnetic coil.

Magnet wire coating means any coating or electrically insulating varnish or enamel applied to magnet wire.

Magnet wire coating facility means a facility that includes one or more magnet wire coating line(s).

Magnet wire coating line means a coating line in which any protective, decorative, or functional coating is applied onto the surface of a magnet wire.

Malfunction means any sudden and unavoidable failure of air pollution control equipment, process equipment, or a process to operate in a normal or usual manner. Failures that are caused entirely or in part by poor maintenance, careless operation, or any other preventable upset condition or preventable equipment breakdown shall not be considered malfunctions.

Manufacturing process means a method whereby a process emission source or series of process emission sources is used to convert raw materials, feed stocks, subassemblies, or other components into a product, either for sale or for use as a component in a subsequent manufacturing process.

Maximum theoretical emissions means the quantity of volatile organic material emissions that theoretically could be emitted by a stationary source before add-on controls based on the design capacity or maximum production capacity of the source and 8760 hours per year. The design capacity or maximum production capacity includes use of coating(s) or ink(s) with the highest volatile organic material content actually used in practice by the source.

Metal furniture means a furniture piece including, but not limited to, tables, chairs, waste baskets, beds, desks, lockers, benches, shelving, file cabinets, lamps, and room dividers.

Metal furniture coating means any non-adhesive coating applied to any furniture piece made of metal or any metal part which is or will be assembled with other metal, wood, fabric, plastic or glass parts to form a furniture piece including, but not limited to, tables, chairs, waste baskets, beds,

desks, lockers, benches, shelving, file cabinets, lamps, and room dividers. This definition shall not apply to any coating line coating miscellaneous metal parts or products.

Metal furniture coating facility means a facility that includes one or more metal furniture coating line(s).

Metal furniture coating line means a coating line in which any protective, decorative, or functional coating is applied onto the surface of metal furniture.

Metallic shoe-type seal means a primary or secondary seal constructed of metal sheets (shoes) which are joined together to form a ring, springs, or levers which attach the shoes to the floating roof and hold the shoes against the tank wall, and a coated fabric which is suspended from the shoes to the floating roof.

Miscellaneous fabricated product manufacturing process means:

(A) A manufacturing process involving one or more of the following applications, including any drying and curing of formulations, and capable of emitting VOM:

(*1*) Adhesives to fabricate or assemble components or products.
(*2*) Asphalt solutions to paper or fiberboard.
(*3*) Asphalt to paper or felt.
(*4*) Coatings or dye to leather.
(*5*) Coatings to plastic.
(*6*) Coatings to rubber or glass.
(*7*) Disinfectant material to manufactured items.
(*8*) Plastic foam scrap or ''fluff'' from the manufacture of foam containers and packaging material to form resin pallets.
(*9*) Resin solutions to fiber substances.
(*10*) Viscose solutions for food casings.

(B) The storage and handling of formulations associated with the process described above, and the use and handling of organic liquids and other substances for clean-up operations associated with the process described in this definition.

Miscellaneous formulation manufacturing process means:

(A) A manufacturing process which compounds one or more of the following and is capable of emitting VOM:

(*1*) Adhesives.
(*2*) Asphalt solutions.
(*3*) Caulks, sealants, or waterproofing agents.
(*4*) Coatings, other than paint and ink.
(*5*) Concrete curing compounds.
(*6*) Dyes.
(*7*) Friction materials and compounds.
(*8*) Resin solutions.
(*9*) Rubber solutions.
(*10*) Viscose solutions.

(B) The storage and handling of formulations associated with the process described above, and the use and handling of organic liquids and other substances for clean-up operations associated with the process described in this definition.

Miscellaneous metal parts or products means any metal part or metal product, even if attached to or combined with a nonmental part or product, except cans, coils, metal furniture, large appliances, magnet wire, automobiles, ships, and airplane bodies.

Miscellaneous metal parts and products coating means any coating applied to any metal part or metal product, even if attached to or combined with a nonmetal part or product, except cans, coils, metal furniture, large appliances, and magnet wire. Prime coat, prime surfacer coat, topcoat, and final repair coat for automobiles and light-duty trucks are not miscellaneous metal parts and products coatings. However, underbody anti-chip (*e.g.*, underbody plastisol) automobile, and light-duty truck coatings are miscellaneous metal parts and products coatings. Also, automobile or light-duty truck refinishing coatings, coatings applied to the exterior of marine vessels, coatings applied to the exterior of airplanes, and the customized topcoating of automobiles and trucks if production is less than 35 vehicles per day are not miscellaneous metal parts and products coatings.

Miscellaneous metal parts or products coating facility means a facility that includes one or more miscellaneous metal parts or products coating lines.

Miscellaneous metal parts or products coating line means a coating line in which any protective, decorative, or functional coating is applied onto the surface of miscellaneous metal parts or products.

Miscellaneous organic chemical manufacturing process means:

(A) A manufacturing process which produces by chemical reaction, one or

more of the following organic compounds or mixtures of organic compounds and which is capable of emitting VOM:

(*1*) Chemicals listed in appendix A of this section.
(*2*) Chlorinated and sulfonated compounds.
(*3*) Cosmetic, detergent, soap, or surfactant intermediaries or specialties and products.
(*4*) Disinfectants.
(*5*) Food additives.
(*6*) Oil and petroleum product additives.
(*7*) Plasticizers.
(*8*) Resins or polymers.
(*9*) Rubber additives.
(*10*) Sweeteners.
(*11*) Varnishes

(B) The storage and handling of formulations associated with the process described above and the use and handling of organic liquids and other substances for clean-up operations associated with the process described in this definition.

Monitor means to measure and record.

Multiple package coating means a coating made from more than one different ingredient which must be mixed prior to using and has a limited pot life due to the chemical reaction which occurs upon mixing.

Offset means, with respect to printing and publishing operations, use of a blanket cylinder to transfer ink from the plate cylinder to the surface to be printed.

Opaque stains means all stains that are not semi-transparent stains.

Open top vapor depressing means the batch process of cleaning and removing soils from surfaces by condensing hot solvent vapor on the colder metal parts.

Open-ended valve means any valve, except pressure relief devices, having one side of the valve in contact with process fluid and one side open to the atmosphere, either directly or through open piping.

Organic compound means any compound of carbon, excluding carbon monoxide, carbon dioxide, carbonic acid, metallic carbides or carbonates, and ammonium carbonate.

Organic material means any chemical compound of carbon including diluents and thinners which are liquids at standard conditions and which are used as dissolvers, viscosity reducers, or cleaning agents, but excluding methane, carbon monoxide, carbon dioxide, carbonic acid, metallic carbonic acid, metallic carbide, metallic carbonates, and ammonium carbonate.

Organic vapor means the gaseous phase of an organic material or a mixture of organic materials present in the atmosphere.

Oven means a chamber within which heat is used for one or more of the following purposes: Dry, bake, cure, or polymerize a coating or ink.

Overall control means the product of the capture efficiency and the control device efficiency.

Overvarnish means a transparent coating applied directly over ink or coating.

Owner or operator means any person who owns, operates, leases, controls, or supervises an emission source or air pollution control equipment.

Packaging rotogravure printing means rotogravure printing upon paper, paper board, metal foil, plastic film, and other substrates, which are, in subsequent operations, formed into packaging products or labels for articles to be sold.

Packaging rotogravure printing line means a rotogravure printing line in which surface coatings are applied to paper, paperboard, foil, film, or other substrates which are to be used to produce containers, packaging products, or labels for articles.

Pail means any cylindrical metal shipping container of 1- to 12-gallon capacity and constructed of 29-gauge and heavier metal.

Paint manufacturing plant means a plant that mixes, blends, or compounds enamels, lacquers, sealers, shellacs, stains, varnishes, or pigmented surface coatings.

Paper coating means any coating applied on paper, plastic film, or metallic foil to make certain products, including (but not limited to) adhesive tapes and labels, book covers, post cards, office copier paper, drafting paper, or pressure sensitive tapes. Paper coating includes the application of coatings by impregnation and/or saturation.

Paper coating facility means a facility that includes one or more paper coating lines.

Paper coating line means a coating line in which any protective, decorative, or functional coating is applied on, saturated into, or impregnated into paper, plastic film, or metallic foil to make certain products, including (but not limited to) adhesive tapes and labels, book covers, post cards, office copier paper, drafting paper, and pressure sensitive tapes.

Parts per million (volume) means a volume/volume ratio which expresses the volumetric concentration of gaseous air contaminant in a million unit volume of gas.

Person means any individual, corporation, partnership, association, State, municipality, political subdivision of a State; any agency, department, or instrumentality of the United States; and any officer, agent, or employee thereof.

Petroleum means the crude oil removed from the earth and the oils derived from tar sands, shale, and coal.

Petroleum refinery means any facility engaged in producing gasoline, kerosene, distillate fuel oils, residual fuel oils, lubricants, or other products through distillation of petroleum, or through redistillation, cracking, or reforming of unfinished petroleum derivatives.

Pharmaceutical means any compound or mixture, other than food, used in the prevention, diagnosis, alleviation, treatment, or cure of disease in man and animal.

Pharmaceutical coating operation means a device in which a coating is applied to a pharmaceutical, including air drying or curing of the coating.

Pigmented coatings means opaque coatings containing binders and colored pigments which are formulated to conceal the wood surface either as an undercoat or topcoat.

Plant means all of the pollutant-emitting activities which belong to the same industrial grouping, are located on one or more contiguous or adjacent properties, and are under the control of the same person (or persons under common control), except the activities of any marine vessel. Pollutant-emitting activities shall be considered as part of the same industrial grouping if they belong to the same ''Major Group'' (*i.e.*, which have the same two-digit code) as described in the ''Standard Industrial Classification Manual, 1987'' (incorporated by reference as specified in 40 CFR 52.742).

Plasticizers means a substance added to a polymer composition to soften and add flexibility to the product.

Prime coat means the first of two or more coatings applied to a surface.

Prime surfacer coat means a coating used to touch up areas on the surface of automobile or light-duty truck bodies not adequately covered by the prime coat before application of the top coat. The prime surfacer coat is applied between the prime coat and topcoat. An anti-chip coating applied to main body parts (*e.g.*, rocker panels, bottom of doors and fenders, and leading edge of roof) is a prime surfacer coat.

Primers means any coatings formulated and applied to substrates to provide a firm bond between the substrate and subsequent coats.

Printing means the application of words, designs, and pictures to a substrate using ink.

Printing line means an operation consisting of a series of one or more roll printers and any associated roll coaters, drying areas, and ovens wherein one or more coatings are applied, dried, and/or cured.

Process means any stationary emission source other than a fuel combustion emission source or an incinerator.

Production equipment exhaust system means a system for collecting and directing into the atmosphere emissions of volatile organic material from reactors, centrifuges, and other process emission sources.

Publication rotogravure printing line means a rotogravure printing line in which coatings are applied to paper which is subsequently formed into books, magazines, catalogues, brochures, directories, newspaper supplements, or other types of printed material.

Reactor means a vat, vessel, or other device in which chemical reactions take place.

Refiner means any person who owns, leases operates, controls, or supervises a refinery.

Refinery unit, process unit or unit means a set of components which are a

part of a basic process operation such as distillation, hydrotreating, cracking, or reforming of hydrocarbons.

Refrigerated condenser means a surface condenser in which the coolant supplied to the condenser has been cooled by a mechanical device, other than by a cooling tower or evaporative spray cooling, such as refrigeration unit or steam chiller unit.

Repair coatings means coatings used to correct imperfections or damage to furniture surface.

Repaired means, for the purpose of paragraph (i) of this section, that equipment component has been adjusted, or otherwise altered, to eliminate a leak.

Roll coater means an apparatus in which a uniform layer of coating is applied by means of one or more rolls across the entire width of a moving substrate.

Roll printer means an apparatus used in the application of words, designs, or pictures to a substrate, usually by means of one or more rolls each with only partial coverage.

Roll printing means the application of words, designs, and pictures to a substrate usually by means of a series of hard rubber or metal rolls each with only partial coverage.

Roller coating means a method of applying a coating to a sheet or strip in which the coating is transferred by a roller or series of rollers.

Rotogravure printing means the application of words, designs, and pictures to a substrate by means of a roll printing technique in which the pattern to be applied is recessed relative to the non-image area.

Rotogravure printing line means a printing line in which each roll printer uses a roll with recessed areas for applying an image to a substrate.

Safety relief valve means a valve which is normally closed and which is designed to open in order to relieve excessive pressures within a vessel or pipe.

Sanding sealers means any coatings formulated for and applied to bare wood for sanding and to seal the wood for subsequent application of varnish. To be considered a sanding sealer a coating must be clearly labelled as such.

Sealer means a coating containing binders which seals wood prior to the application of the subsequent coatings.

Semi-transparent stains means stains containing dyes or semi-transparent pigments which are formulated to enhance wood grain and change the color of the surface but not to conceal the surface, including, but not limited to, sap stain, toner, non-grain raising stains, pad stain, or spatter stain.

Set of safety relief valves means one or more safety relief valves designed to open in order to relieve excessive pressures in the same vessel or pipe.

Sheet basecoat means a coating applied to metal when the metal is in sheet form to serve as either the exterior or interior of a can for either two-piece or three-piece cans.

Side-seam spray coat means a coating applied to the seam of a three-piece can.

Single coat means one coating application applied to a metal surface.

Solvent means a liquid substance that is used to dissolve or dilute another substance.

Solvent cleaning means the process of cleaning soils from surfaces by cold cleaning, open top vapor degreasing, or conveyorized degreasing.

Specified air contaminant means any air contaminant as to which this Section contains emission standards or other specific limitations.

Splash loading means a method of loading a tank, railroad tank car, tank truck, or trailer by use of other than a submerged loading pipe.

Standard conditions means a temperature of 70 °F and a pressure of 14.7 psia.

Standard cubic foot (scf) means the volume of one cubic foot of gas at standard conditions.

Standard Industrial Classification Manual means the Standard Industrial Classification Manual (1987), Superintendent of Documents, U.S. Government Printing Office, Washington, DC 20402 (incorporated by reference as specified in 40 CFR 52.742).

Start-up means the setting in operation of an emission source for any purpose.

Stationary emission source and *Stationary source* mean an emission source which is not self-propelled.

Storage tank or storage vessel means any stationary tank, reservoir or container used for the storage of VOL's.

Submerged loading pipe means any discharge pipe or nozzle which meets either of the following conditions:

(A) Where the tank is filled from the top, the end of the discharge pipe or nozzle must be totally submerged when the liquid level is 15 cm (6 in.) above the bottom of the tank.

(B) Where the tank is filled from the side, the discharge pipe or nozzle must be totally submerged when the liquid level is 46 cm (18 in.) above the bottom of the tank.

Substrate means the surface onto which a coating is applied or into which a coating is impregnated.

Surface condenser means a device which removes a substance from a gas stream by reducing the temperature of the stream, without direct contact between the coolant and the stream.

Tablet coating operation means a pharmaceutical coating operation in which tablets are coated.

Thirty-day rolling average means any value arithmetically averaged over any consecutive thirty-days.

Three-piece can means a can which is made from a rectangular sheet and two circular ends.

Topcoat means a coating applied in a multiple coat operation other than prime coat, final repair coat, or prime surfacer coat.

Topcoat operation means all topcoat spray booths, flash-off areas, and bake ovens at a facility which are used to apply, dry, or cure the final coatings (except final off-line repair) on components of automobile or light-duty truck bodies.

Transfer efficiency means the ratio of the amount of coating solids deposited onto a part or product to the total amount of coating solids used.

True vapor pressure means the equilibrium partial pressure exerted by a volatile organic liquid as determined in accordance with methods described in American Petroleum Institute Bulletin 2517, ''Evaporation Loss From Floating Roof Tanks,'' second edition, February 1980 (incorporated by reference as specified in 40 CFR 52.742).

Two-piece can means a can which is drawn from a shallow cup and requires only one end to be attached.

Undercoaters means any coatings formulated for and applied to substrates to provide a smooth surface for subsequent coats.

Unregulated safety relief valve means a safety relief valve which cannot be actuated by a means other than high pressure in the pipe or vessel which it protects.

Vacuum producing system means any reciprocating, rotary, or centrifugal blower or compressor or any jet ejector or device that creates suction from a pressure below atmospheric and discharges against a greater pressure.

Valves not externally regulated means valves that have no external controls, such as in-line check valves.

Vapor balance system means any combination of pipes or hoses which creates a closed system between the vapor spaces of an unloading tank and a receiving tank such that vapors displaced from the receiving tank are transferred to the tank being unloaded.

Vapor collection system means all piping, seals, hoses, connections, pressure-vacuum vents, and other possible sources between the gasoline delivery vessel and the vapor processing unit and/or the storage tanks and vapor holder.

Vapor control system means any system that limits or prevents release to the atmosphere of organic meterial in the vapors displaced from a tank during the transfer of gasoline.

Vapor recovery system means a vapor gathering system capable of collecting all VOM vapors and gases discharged from the storage tank and a vapor disposal system capable of processing such VOM vapors and gases so as to prevent their emission to the atmosphere.

Vehicle means a device by which any person or property may be propelled, moved, or drawn upon a highway, excepting a device moved exclusively by human power or used exclusively upon stationary rails or tracks.

Vinyl coating means any topcoat or printing ink applied to vinyl coated fabric or vinyl sheets. Vinyl coating does not include plastisols.

Vinyl coating facility means a facility that includes one or more vinyl coating line(s).

Vinyl coating line means a coating line in which any protective, decorative or functional coating is applied onto vinyl coated fabric or vinyl sheets.

Volatile organic liquid means any substance which is liquid at storage conditions and which contains volatile organic compounds.

Volatile organic material (VOM) or volatile organic compounds (VOC) is as defined in § 51.100(s) of this chapter.

Wash coat means a coating containing binders which seals wood surfaces, prevents undesired staining, and controls penetration.

Web means a substrate which is printed in continuous roll-fed presses.

Wood furniture means room furnishings including cabinets (kitchen, bath, and vanity), tables, chairs, beds, sofas, shutters, art objects, wood paneling, wood flooring, and any other coated furnishings made of wood, wood composition, or fabricated wood materials.

Wood furniture coating facility means a facility that includes one or more wood furniture coating line(s).

Wood furniture coating line means a coating line in which any protective, decorative, or functional coating is applied onto wood furniture.

Woodworking means the shaping, sawing, grinding, smoothing, polishing, and making into products of any form or shape of wood.

(4) *Testing methods and procedures*—(i) Coatings, inks and fountain solutions. The following test methods and procedures shall be used to determine compliance of as applied coatings, inks, and fountain solutions with the limitations set forth in § 52.741.

(A) *Sampling.* Samples collected for analyses shall be one-liter taken into a one-liter container at a location and time such that the sample will be representative of the coating as applied (i.e., the sample shall include any dilution solvent or other VOM added during the manufacturing process). The container must be tightly sealed immediately after the sample is taken. Any solvent or other VOM added after the sample is taken must be measured and accounted for in the calculations in paragraph(a)(4)(i)(C) of this section. For multiple package coatings, separate samples of each component shall be obtained. A mixed sample shall not be obtained as it will cure in the container. Sampling procedures shall follow the guidelines presented in:

(*1*) ASTM D3925–81 (Reapproved 1985) Standard Practice for Sampling Liquid Paints and Related Pigment Coating. This practice is incorporated by reference as specified in 40 CFR 52.742.

(*2*) ASTM E300–86 Standard Practice for Sampling Industrial Chemicals. This practice is incorporated by reference as specified in 40 CFR 52.742.

(B) *Analyses.* The applicable analytical methods specified below shall be used to determine the composition of coatings, inks, or fountain solutions as applied.

(*1*) Method 24 of 40 CFR part 60, appendix A, shall be used to determine the VOM content and density of coatings. If it is demonstrated to the satisfaction of the Administrator that plant coating formulation data are equivalent to Method 24 results, formulation data may be used. In the event of any inconsistency between a Method 24 test and a facility's formulation data, the Method 24 test will govern.

(*2*) Method 24A of 40 CFR part 60, appendix A, shall be used to determine the VOM content and density of rotogravure printing inks and related coatings. If it is demonstrated to the satisfaction of the Administrator that the plant coating formulation data are equivalent to Method 24A results, formulation data may be used. In the event of any inconsistency between a Method 24A test and a facility's formulation data, the Method 24A test will govern.

(*3*) The following ASTM methods are the analytical procedures for determining VOM:

(*i*) ASTM D1475–85: Standard Test Method for Density of Paint, Varnish, Lacquer and Related Products. This test method is incorporated by reference as specified in 40 CFR 52.742.

(*ii*) ASTM D2369–87: Standard Test Method for Volatile Content of Coatings. This test method is incorporated by reference as specified in 40 CFR 52.742.

(*iii*) ASTM D3792–86: Standard Test Method for Water Content of Water-reducible

Paints by Direct Injection into a Gas Chromatograph. This test method is incorporated by reference as specified in 40 CFR 52.742.

(*iv*) ASTM D4017–81 (Reapproved 1987): Standard Test Method for Water in Paints and Paint Materials by the Karl Fischer Method. This test method is incorporated by reference as specified in 40 CFR 52.742.

(*v*) ASTM D4457–85: Standard Test Method for Determination of Dichloromethane and 1,1,1-Trichloroethane in Paints and Coatings by Direct Injection into a Gas Chromatograph. (The procedure delineated above can be used to develop protocols for any compounds specifically exempted from the definition of VOM.) This test method is incorporated by reference as specified in 40 CFR 52.742.

(*vi*) ASTM D2697–86: Standard Test Method for Volume Non-Volatile Matter in Clear or Pigmented Coatings. This test method is incorporated by reference as specified in 40 CFR 52.742.

(*vii*) ASTM D3980–87: Standard Practice for Interlaboratory Testing of Paint and Related Materials. This practice is incorporated by reference as specified in 40 CFR 52.742.

(*viii*) ASTM E180–85: Standard Practice for Determining the Precision of ASTM Methods for Analysis of and Testing of Industrial Chemicals. This practice is incorporated by reference as specified in 40 CFR 52.742.

(*ix*) ASTM D2372–85: Standard Method of Separation of Vehicle from Solvent-reducible Paints. This method is incorporated by reference as specified in 40 CFR 52.742.

(*4*) Use of an adaptation to any of the analytical methods specified in paragraphs (a)(4)(i)(B)(*1*), (*2*) and (*3*) may be approved by the Administrator on a case-by-case basis. An owner or operator must submit sufficient documentation for the Administrator to find that the analytical methods specified in paragraphs (a)(4)(i)(B)(*1*), (*2*) and (*3*) will yield inaccurate results and that the proposed adaptation is appropriate.

(C) *Calculations.* Calculations for determining the VOM content, water content and the content of any compounds which are specifically exempted from the definition of VOM of coatings, inks and fountain solutions as applied shall follow the guidance provided in the following documents.

(1) ''A Guide for Surface Coating Calculation'' EPA–340/1–86–016 (which is available from the National Technical Information Services, 5285 Port Royal Road, Springfield, VA 22161)

(2) ''Procedures for Certifying Quantity of Volatile Organic Compounds Emitted by Paint, Ink and Other Coatings'' (revised June 1986) EPA–450/3–84–019 (which is available from the National Technical Information Services, 5285 Port Royal Road, Springfield, VA 22161)

(3) ''A Guide for Graphic Arts Calculations'' August 1988 EPA–340/1–88–003 (which is available from the National Technical Information Services, 5285 Port Royal Road, Springfield, VA 22161)

(ii) *Automobile or light-duty truck test protocol.* The protocol for testing, including determining the transfer efficiency, of coating applicators at topcoat coating operations at an automobile assembly facility shall follow the procedure in: ''Protocol for Determining the Daily Volatile Organic Compound Emission Rate of Automobile and Light-Duty Truck Topcoat Operations'' December 1988 EPA–450/3–88–018 (which is available for purchase from the National Technical Information Services, 5285 Port Royal Road, Springfield, VA 22161)

(iii) *Capture system efficiency test protocols*—(A) *Applicability.* The requirements of paragraphs (a)(4)(iii)(B) of this section shall apply to all VOM emitting processes employing capture equipment (*e.g.,* hoods, ducts), except those cases noted below.

(*1*) If a source installs a permanent total enclosure (PTE) that meets USEPA specifications, and which directs all VOM to a control device, then the source is exempted from the requirements described in paragraph (B). The USEPA specifications to determine whether a strucutre is considered a PTE are given in Procedure T of appendix B of this section. In this instance, the capture efficiency is assumed to be 100 percent and the source is still required to measure control efficiency using appropriate test methods as specified in (a)(4)(iv) of this section.

(*2*) If a source uses a control device designed to collect and recover VOM (*e.g.,* carbon adsorber), an explicit measurement of capture efficiency is not necessary provided that the conditions given below are met. The overall

control of the system can be determined by directly comparing the input liquid VOM to the recovered liquid VOM. The general procedure for use in this situation is given in 40 CFR 60.433, with the following additional restrictions:

(*i*) The source must be able to equate solvent usage with solvent recovery on a 24-hour (daily) basis, rather than a 30-day weighted average, within 72 hours following the 24-hour period. In addition, one of the following two criteria must be met:

(*ii*) The solvent recovery system (i.e., capture and control system) must be dedicated to a single process line (*e.g.*, one process line venting to a carbon adsorber system), or

(*iii*) If the solvent recovery system controls multiple process lines, then the source must be able to demonstrate that the overall control (*i.e.*, the total recovered solvent VOM divided by the sum of liquid VOM input to all process lines venting to the control system) meets or exceeds the most stringent standard applicable for any process line venting to the control system.

(B) *Specific requirements.* The capture efficiency of a process line shall be measured using one of the four protocols given below. Any error margin associated with a test protocol may not be incorporated into the results of a capture efficiency test. If these techniques are not suitable for a particular process, then the source must present an alternative capture efficiency protocol and obtain approval for it by the Administrator as a SIP or FIP revisions.

(*1*) Gas/gas method using temporary total enclosure (TTE). The USEPA specifications to determine whether a temporary enclosure is considered a TTE are given in Procedure T of appendix B of this section. The capture efficiency equation to be used for this protocol is:

$$CE=Gw/(GW+Fw)$$

where:

CE=capture efficiency, decimal fraction.

Gw=mass of VOM captured and delivered to control device using a TTE.

Fw=mass of fugitive VOM that escapes from a TTE.

Procedure G.2 contained in appendix B of this section is used to obtain Gw. Procedure F.1 in appendix B of this section is used to obtain Fw.

(*2*) *Liquid/gas method using TTE.* The USEPA specifications to determine whether a temporary enclosure is considered a TTE are given in Procedure T of appendix B of this section. The capture efficiency equation to be used for this protocol is:

$$CE=(L-F)/L$$

where:

CE=capture efficiency, decimal fraction.

L=mass of liquid VOM input to process.

Fw=mass of fugitive VOM that escapes from a TTE.

Procedure L contained in appendix B of this section is used to obtain L. Procedure F.1 in appendix B of this section is used to obtain Fw.

(*3*) Gas/gas method using the building or room (building or room enclosure) in which the affected source is located as the enclosure and in which ''F'' and ''G'' are measured while operating only the affected facility. All fans and blowers in the building or room must be operated as they would under normal production. The capture efficiency equation to be used for this protocol is:

$$CE=G/(G+F_B)$$

where:

CE=capture efficiency, decimal fraction.

G=mass of VOM captured and delivered to control device.

F_B=mass of fugitive VOM that escapes from building enclosure.

Procedure G.2 contained in appendix B of this section is used to obtain G. Procedure F.2 in appendix B of this section is used to obtain F_B.

(*4*) Liquid/gas method using the building or room (building or room enclosure) in which the affected source is located as the enclosure and in which ''F'' and ''L'' are measured while operating only the affected facility. All fans and blowers in the building or room must be operated as they would under normal production. The capture efficiency equation to be used for this protocol is:

$$CE=(L-F_B)/L$$

where:

CE=capture efficiency, decimal fraction.

L=mass of liquid VOM input to process.

F_B=mass of fugitive VOM that escapes from building enclosure.

Procedure L contained in appendix B of this section is used to obtain L. Procedure F.2 in appendix B of this section is used to obtain F_B.

(C) *Recordkeeping and reporting. (1)* All affected facilities must maintain a copy of the capture efficiency protocol submitted to USEPA on file. All results of the appropriate test methods and capture efficiency protocols must be reported to USEPA within sixty (60) days of the test date. A copy of the results must be kept on file with the source for a period of three (3) years.

(*2*) If any changes are made to capture or control equipment, then the source is required to notify USEPA of these changes and a new test may be required by USEPA.

(*3*) The source must notify the Administrator 30 days prior to performing any capture efficiency or control test. At that time, the source must notify the Administrator which capture efficiency protocol and control device test methods will be used.

(*4*) Sources utilizing a PTE must demonstrate that this enclosure meets the requirement given in Procedure T (in appendix B of this section) for a PTE during any testing of their control device.

(*5*) Sources utilizing a TTE must demonstrate that their TTE meets the requirements given in Procedure T (in appendix B of this section) for a TTE during testing of their control device. The source must also provide documentation that the quality assurance criteria for a TTE have been achieved.

(iv) *Control device efficiency testing and monitoring.* (A) The control device efficiency shall be determined by simultaneously measuring the inlet and outlet gas phase VOM concentrations and gas volumetric flow rates in accordance with the gas phase test methods specified in paragraph (a)(4)(vi) of this section.

(B) Any owner or operator that uses an afterburner or carbon adsorber to comply with any paragraph of § 52.741 shall use USEPA approved continuous monitoring equipment which is installed, calibrated, maintained, and operated according to vendor specifications at all times the afterburner or carbon adsorber is in use. The continuous monitoring equipment must monitor the following parameters:

(*1*) Combustion chamber temperature of each afterburner.

(*2*) Temperature rise across each catalytic afterburner bed or VOM concentration of exhaust.

(*3*) The VOM concentration of each carbon adsorption bed exhaust.

(v) *Overall efficiency*. (A) The overall efficiency of the emission control system shall be determined as the product of the capture system efficiency and the control device efficiency or by the liquid/liquid test protocol as specified in 40 CFR 60.433 (and revised by paragraph (a)(4)(iii)(A)(*2*) of this section for each solvent recovery system. In those cases in which the overall efficiency is being determined for an entire line, the capture efficiency used to calculate the product of the capture and control efficiency is the total capture efficiency over the entire line.

(B) For coating lines which are both chosen by the owner or operator to comply with paragraphs (e)(2)(ii), (e)(2)(iii), (e)(2)(iv), (e)(2)(v), or (e)(2)(vi) of this section by the alternative in paragraph (e)(2)(i)(B) of this section and meet the criteria allowing them to comply with paragraph (e)(2) of this section instead of paragraph (e)(1) of this section, the overall efficiency of the capture system and control device, as determined by the test methods and procedures specified in paragraphs (a)(4) (iii), (iv) and (v)(A) of this section, shall be no less than the equivalent overall efficiency which shall be calculated by the following equation:

$$E = ([VOM_a - VOM_1]/VOM_a) \times 100$$

Where:

E = Equivalent overall efficiency of the capture system and control device as a percentage,

VOM_a = Actual VOM content of a coating, or the daily-weighted average VOM content of two or more coatings (if more than one coating is used), as applied to the subject coating line as determined by the applicable test methods and procedures specified in paragraph (a)(4)(i) of this section in units of kg VOM/l (lb VOM/gal) of coating solids as applied,

VOM_1 = The VOM emission limit specified in paragraph (e)(2) (i) or (ii) of this section in units of kg VOM/l (lb VOM/gal) of coating solids as applied.

(vi) *Volatile organic material gas phase source test methods.* The methods in 40 CFR part 60, appendix A, delineated below shall be used to determine control device efficiencies.

(A) 40 CFR part 60, appendix A, Method 18, 25 or 25A, as appropriate to the conditions at the site, shall be used to determine VOM concentration. Method selection shall be based on consideration of the diversity of organic species present and their total concentration and on consideration of the potential presence of interfering gases. Except as indicated in paragraphs (a)(4)(vi)(A)(*1*) and (*2*) of this section, the test shall consist of three separate runs, each lasting a minimum of 60 min, unless the Administrator determines that process variables dictate shorter sampling times.

(*1*) When the method is to be used to determine the efficiency of a carbon adsoption system with a common exhaust stack for all the individual adsorber vessels, the test shall consist of three separate runs, each coinciding with one or more complete sequences through the adsorption cycles of all the individual adsorber vessels.

(*2*) When the method is to be used to determine the efficiency of a carbon adsorption system with individual exhaust stacks for each adsorber vessel, each adsorber vessel shall be tested individually. The test for each adsorber vessel shall consist of three separate runs. Each run shall coincide with one or more complete adsorption cycles.

(B) 40 CFR part 60, appendix A, Method 1 or 1A shall be used for sample and velocity traverses.

(C) 40 CFR part 60, appendix A, Method 2, 2A, 2C or 2D shall be used for velocity and volumetric flow rates.

(D) 40 CFR part 60, appendix A, Method 3 shall be used for gas analysis.

(E) 40 CFR part 60, appendix A, Method 4 shall be used for stack gas moisture.

(F) 40 CFR part 60, appendix A, Methods 2, 2A, 2C, 2D, 3 and 4 shall be performed, as applicable, at least twice during each test run.

(G) Use of an adaptation to any of the test methods specified in paragraphs (a)(4)(vi) (A), (B), (C), (D), (E), and (F) of this section may be approved by the Administrator on a case-by-case basis. An owner or operator must submit sufficient documentation for the Administrator to find that the test methods specified in paragraphs (a)(4)(vi) (A), (B), (C), (D), (E), and (F) of this section will yield inaccurate results and that the proposed adaptation is appropriate.

(vii) *Leak detection methods for volatile organic material.* Owners or operators required by the various subparts of this regulation to carry out a leak detection monitoring program shall comply with the following requirements:

(A) *Leak detection monitoring.* (*1*) Monitoring shall comply with 40 CFR part 60, appendix A. Method 21.

(*2*) The detection instrument shall meet the performance criteria of Method 21.

(*3*) The instrument shall be calibrated before use on each day of its use by the methods specified in Method 21.

(*4*) Calibration gases shall be:

(*i*) Zero air (less than 10 ppm of hydrocarbon in air); and

(*ii*) A mixture of methane or n-hexane and air at a concentration of approximately, but no less than, 10,000 ppm methane or n-hexane.

(*5*) The instrument probe shall be traversed around all potential leak interfaces as close to the interface as possible as described in Method 21.

(*B*) When equipment is tested for compliance with no detectable emissions as required, the test shall comply with the following requirements:

(*1*) The requirements of paragraphs (a)(4) (vii)(A)(*1*) through (vii)(A)(*5*) of this section shall apply.

(*2*) The background level shall be determined as set forth in Method 21.

(*C*) Leak detection tests shall be performed consistent with:

(*1*) ''APTI Course SI 417 controlling Volatile Organic Compound Emissions from Leaking Process Equipment'' EPA–450/2–82–015 (which is available for purchase from the National Technical Information Services, 5285 Port Royal Road, Springfield, VA 22161)

(*2*) ''Portable Instrument User's Manual for Monitoring VOC Sources'' EPA–340/1–86–015 (which is available for purchase from the National Technical Information Services, 5285 Port Royal Road, Springfield, VA 22161)

(*3*) ''Protocols for Generating Unit-Specific Emission Estimates for Equipment Leaks of VOC and VHAP'' EPA–450/3–88–010 (which is available for purchase from the National Technical Information Services, 5285 Port Royal Road, Springfield, VA 22161)

(*4*) ''Petroleum Refinery Enforcement Manual'' EPA–340/1–80–008 (which is available for purchase from the National Technical Information Services, 5285 Port Royal Road, Springfield, VA 22161)

(viii) *Bulk gasoline delivery system test protocol.* (A) The method for determining the emissions of gasoline from a vapor recovery system are delineated in 40 CFR part 60, subpart XX, § 60.503.

(B) Other tests shall be performed consistent with:

(*1*) ''Inspection Manual for Control of Volatile Organic Emissions from Gasoline Marketing Operations: Appendix D'' EPA–340/1–80–012 (which is available for purchase from the National Technical Information Services, 5285 Port Royal Road, Springfield, VA 22161)

(*2*) ''Control of Hydrocarbons from Tank Truck Gasoline Loading Terminals: Appendix A'' EPA–450/2–77–026 (which is available for purchase from the National Technical Information Services, 5285 Port Royal Road, Springfield, VA 22161)

(5) *Compliance dates.* Compliance with the requirements of all rules is required by July 1, 1991, unless otherwise indicated by compliance dates contained in specific rules. This paragraph shall not operate to provide additional time for compliance under section 113(d) of the Act, 42 U.S.C. 7413(d), for sources subject to compliance upon promulgation.

(6) *Afterburners.* The operation of any natural gas fired afterburner and capture system used to comply with § 52.741 is not required during the period of November 1 of any year to April 1 of the following year provided that the operation of such devices is not required for purposes of occupational safety or health, or for the control of toxic substances, odor nuisances, or other regulated pollutants.

(7) *Exemptions, variances, and alternative means of control or compliance determinations.* Notwithstanding the provisions of any other paragraphs of this section, any exemptions, variances or alternatives to the control requirements, emission limitations, or test methods in the Illinois SIP or FIP can only be allowed if approved by the Administrator as a SIP or FIP revision.

(8) *Vapor pressure of volatile organic liquids.* (i) If the VOL consists of only a single compound, the vapor pressure shall be determined by ASTM Method D2879–86 (incorporated by reference as specified in 40 CFR 52.742) or the vapor pressure may be obtained from a published source such as: Boublik, T., V. Fried and E. Hala, ''The Vapor Pressure of Pure Substances,'' Elsevier Scientific Publishing Co., New York (1973); Perry's Chemical Engineer's Handbook, McGraw-Hill Book Company (1984); CRC Handbook of Chemistry and Physics, Chemical Rubber Publishing Company (1986–87); and Lange's Handbook of Chemistry, John A. Dean, editor, McGraw-Hill Book Company (1985).

(ii) If the VOL is a mixture, the vapor pressure shall be determined by ASTM Method D2879–86 (incorporated by reference as specified in 40 CFR 52.742) or by the following equation:

$$P_{vol} = \sum_{i=1}^{n} P_i X_i$$

where:

P_{vol}=Total vapor pressure of the mixture,
n=Number of components in the mixture,
i=Subscript denoting an individual component,
P_i=Vapor pressure of a component determined in accordance with paragraph (a) of this section
X_i=Mole fraction of the component in the total mixture.

(9) *Vapor pressure of organic material or solvent.* (i) If the organic material or solvent consists of only a single compound, the vapor pressure shall be determined by ASTM Method D2879–86 (incorporated by reference as specified in 40 CFR 52.742) or the vapor pressure may be obtained from a published source such as: Boublik, T., V. Fried and E. Hala, ''The Vapor Pressure of Pure Substances,'' Elsevier Scientific Publishing Co., New York (1973); Perry's Chemical Engineer's Handbook, McGraw-Hill Book Company (1984); CRC Handbook of Chemistry and Physics, Chemical Rubber Publishing Company (1986–87); and Lange's Handbook

of Chemistry, John A. Dean, editor, McGraw-Hill Book Company (1985).

(ii) If the organic material or solvent is in a mixture made up of both organic material compounds and compounds which are not organic material, the vapor pressure shall be determined by the following equation:

$$P_{om} = \frac{\sum_{i=1}^{n} P_i X_i}{\sum_{i=1}^{n} X_i}$$

where:

P_{om}=Total vapor pressure of the portion of the mixture which is composed of organic material,

n=Number of organic material components in the mixture,

i=Subscript denoting an individual component,

P_i=Vapor pressure of an organic material component determined in accordance with paragraph (a) of this section,

X_i=Mole fraction of the organic material component of the total mixture.

(iii) If the organic material or solvent is in a mixture made up of only organic material compounds, the vapor pressure shall be determined by ASTM Method D2879–86 (incorporated by reference as specified in 40 CFR 52.742) or by the above equation.

(10) *Vapor pressure of volatile organic material.* (i) If the VOM consists of only a single compound, the vapor pressure shall be determined by ASTM Method D2879–86 (incorporated by reference as specified in 40 CFR 52.742) or the vapor pressure may be obtained from a published source such as: Boublik, T., V. Fried and E. Hala, ''The Vapor Pressure of Pure Substances,'' Elsevier Scientific Publishing Co., New York (1973); Perry's Chemical Engineer's Handbook, McGraw-Hill Book Company (1984); CRC Handbook of Chemistry and Physics, Chemical Rubber Publishing Company (1986–87); and Lange's Handbook of Chemistry, John A. Dean, editor, McGraw-Hill Book Company (1985).

(ii) If the VOM is in a mixture made up of both VOM compounds and compounds which are not VOM, the vapor pressure shall be determined by the following equation:

$$P_{vom} = \frac{\sum_{i=1}^{n} P_i X_i}{\sum_{i=1}^{n} X_i}$$

where:

P_{vom}=Total vapor pressure of the portion of the mixture which is composed of VOM,

n=Number of VOM components in the mixture,

i=Subscript denoting an individual component,

P_i=Vapor pressure of a VOM component determined in accordance with paragraph (a) of this section,

X_i=Mole fraction of the VOM component of the total mixture.

(iii) If the VOM is in a mixture made up of only VOM compounds, the vapor pressure shall be determined by ASTM Method D2879–86 (incorporated by reference as specified in 40 CFR 52.742) or by the above equation.

(b)—(c) [Reserved]

(d) *Solvent cleaning*—(1) *Solvent cleaning in general.* The requirements of subpart E (sections 215.182–215.184) of 35 Ill. Adm. Code 215 (incorporated by reference as specified in 40 CFR 52.742) shall apply to all cold cleaning, open top vapor degreasing, and conveyorized degreasing operations.

NOTE: For Federal purposes, paragraph (d)(1) supersedes subpart E (section 215.181) of 35 Ill. Adm. Code 215.)

(2) *Compliance schedule.* Every owner or operator of an emission source which was previously exempt from the requirements of subpart E (sections 215.182–215.184) of 35 Ill. Adm. Code 215 (incorporated by reference as specified in 40 CFR 52.742) because it satisfied the criteria in either (d)(a)(i) or (d)(2)(ii) of this section, shall comply with the requirements of subpart E (sections 215.182–215.184) of 35 Ill. Adm. Code 215 (incorporated by reference as specified in 40 CFR 52.742) on and after July 1, 1991. A source which did not satisfy the criteria in either (d)(a)(i) or (d)(2)(ii) of this section, shall comply with the requirements of subpart E

(sections 215.182–215.184) of 35 Ill. Adm. Code 215 (incorporated by reference as specified in 40 CFR 52.742) upon promulgation.

(i) If emissions of VOM exceed neither 6.8 kg (15 lbs) in any one day, nor 1.4 kg (3 lbs) in any one hour, or

(ii) If the source is used exclusively for chemical or physical analysis or for determination of product quality and commercial acceptance, provided that the operation of the source is not an integral part of the production process, the emissions of VOM from the source do not exceed 363 kg (800 lbs) in any calendar month, and the exemption had been approved in writing by the Illinois Environmental Protection Agency.

(3) *Test methods.* The following test methods shall be used to demonstrate compliance with subpart E (sections 215.182–215.184) of 35 Ill. Adm. Code 215 (incorporated by reference as specified in 40 CFR 52.742):

(i) Vapor pressures shall be determined by using the procedure specified in paragraph (a)(9) of this section.

(ii) Exhaust ventilation rates shall be determined by using the procedures specified in paragraph (a)(4)(vi)(C) of this section.

(iii) The performance of control devices shall be determined by using the procedures specified in paragraph (a)(4)(vi) of this section.

(e) *Coating operations*—(1) *Emission limitations for manufacturing plants.* (i) Except as provided in paragraph (e)(3) of this section, no owner or operator of a coating line shall apply at any time any coating in which the VOM content exceeds the following emission limitations for the specified coating. The following emission limitations are expressed in units of VOM per volume of coating (minus water and any compounds which are specifically exempted from the definition of VOM) as applied at each coating applicator, except where noted. Compounds which are specifically exempted from the definition of VOM should be treated as water for the purpose of calculating the ''less water'' part of the coating composition. Compliance with this paragraph must be demonstrated through the applicable coating analysis test methods and procedures specified in paragraph (a)(4)(i) of this section and the recordkeeping and reporting requirements specified in paragraph (e)(6)(ii) of this section. As an alternative to compliance with this paragraph, the owner or operator of a coating line may meet the requirements of paragraph (e)(1)(ii) or paragraph (e)(2) of this section. The equation presented in paragraph (e)(1)(iii) of this section shall be used to calculate emission limitations for determining compliance by add-on controls, credits for transfer efficiency, emissions trades and cross-line averaging.

	kg/l	lb/gal
(A) Automobile or Light-Duty Truck Coating		
(1) Prime coat	0.14	(1.2)
(2) Prime surfacer coat	0.34	(2.8)

NOTE: The prime surfacer coat limitation is based upon a transfer efficiency of 30 percent. Transfer efficiency credits can only be allowed if approved by the Administrator as a SIP or FIP revision.

(3) Topcoat	1.81	(15.1)

NOTE: The topcoat limitation is in units of kg (lbs) of VOM per l (gal) of coating solids deposited. Compliance with the limitation shall be based on the daily-weighted average VOM content from the entire topcoat operation (all topcoat spray booths, flash-off areas and bake ovens). Compliance shall be demonstrated in accordance with the topcoat protocol for automobiles and light-duty trucks referenced in paragraph (a)(4)(ii) of this section. Paragraph (e)(1)(ii) of this section does not apply to the topcoat limitation.) At least 180 days prior to the initial compliance date, the owner or operator of a coating line subject to the topcoat limitation shall submit to the Administrator a detailed proposal specifying the method of demonstrating compliance with the protocol. The proposal shall include, at a minimum, a comprehensive plan (including a rationale) for determining the transfer efficiency at each booth through the use of in-plant, or pilot testing; the selection of coatings to be tested (for the purpose of determining transfer efficiency) including the rationale for coating groupings; and the method for determining the analytic VOM content of as applied coatings and the formulation solvent content of as applied coatings. Upon approval of the protocol by the Administrator, the source may proceed with the compliance demonstration.

(4) Final repair coat	0.58	(4.8)
(B) Can Coating		
(1) Sheet basecoat and overvarnish	0.34	(2.8)
(2) Exterior basecoat and overvarnish	0.34	(2.8)
(3) Interior body spray coat	0.51	(4.2)
(4) Exterior end coat	0.51	(4.2)

	kg/l	lb/gal
(5) Side seam spray coat	0.66	(5.5)
(6) End sealing compound coat	0.44	(3.7)
(C) Paper Coating	0.35	(2.9)
NOTE: The paper coating limitation shall not apply to any owner or operator of any paper coating line on which printing is performed if the paper coating line complies with the emissions limitations in paragraph (h)(1) of this section: Printing and Publishing.		
(D) Coil Coating	0.31	(2.6)
(E) Fabric Coating	0.35	(2.9)
(F) Vinyl Coating	0.45	(3.8)
(G) Metal Furniture Coating	0.36	(3.0)
(H) Large Appliance Coating	0.34	(2.8)
NOTE: The limitation shall not apply to the use of quick-drying lacquers for repair of scratches and nicks that occur during assembly, provided that the volume of coating does not exceed 0.95 l (1 quart) in any one rolling eight-hour period.		
(I) Magnet Wire Coating	0.20	(1.7)
(J) Miscellaneous Metal Parts and Products Coating		
(1) Clear coating	0.52	(4.3)
(2) Air-dried coating	0.42	(3.5)
(3) Extreme performance coating	0.42	(3.5)
(4) Steel pail and drum interior coating	0.52	(4.3)
(5) All other coatings	0.36	(3.0)

	kg/l	lb/gal
(K) Heavy Off-Highway Vehicle Products Coating		
(1) Extreme performance prime coat	0.42	(3.5)
(2) Extreme performance top-coat (air dried)	0.42	(3.5)
(3) Final repair coat (air dried)	0.42	(3.5)
(4) All other coatings are subject to the emission limitations for miscellaneous metal parts and products coatings in paragraph (e)(1)(i)(J) of this section.		
(L) Wood Furniture Coating		
(1) Clear topcoat	0.67	(5.6)
(2) Opaque stain	0.56	(4.7)
(3) Pigmented coat	0.60	(5.0)
(4) Repair coat	0.67	(5.6)
(5) Sealer	0.67	(5.6)
(6) Semi-transparent stain	0.79	(6.6)
(7) Wash coat	0.73	(6.1)
NOTE: An owner or operator of a wood furniture coating operation subject to this paragraph shall apply all coatings, with the exception of no more than 37.8 l (10 gal) of coating per day used for touch-up and repair operations, using one or more of the following application systems: airless spray application system, air-assisted airless spray application system, electrostatic spray application system, electrostatic bell or disc spray application system, heated airless spray application system, roller coating, brush or wipe coating application system, or dip coating application system.		
(M) Existing Diesel-Electric Locomotive Coating Lines in Cook County		
(1) Extreme performance prime coat	0.42	(3.5)
(2) Extreme performance top-coat (air dried)	0.42	(3.5)
(3) Final repair coat (air dried)	0.42	(3.5)
(4) High-temperature aluminum coating	0.72	(6.0)
(5) All other coatings	0.36	(3.0)

(ii) *Daily-weighted average limitations.* No owner or operator of a coating line subject to the limitations of paragraph (e)(1)(i) of this section and complying by means of paragraph (e)(1)(ii) of this section shall operate the subject coating line unless the owner or operator has demonstrated compliance with paragraph (e)(1) (ii)(A), (ii)(B), (ii)(C), (ii)(D), (ii)(E) or (ii)(F) of this section (depending upon the source category) through the applicable coating analysis test methods and procedures specified in paragraph (a)(4)(i) of this section and the recordkeeping and reporting requirements specified in paragraph (e)(6)(iii) of this section.

(A) No owner or operator of a coating line subject to only one of the limitations from among paragraph (e)(1)(i)(A)*(1)*, (i)(A)*(2)*, (i)(A)*(4)*, (i)(C), (i)(D), (i)(E), (i)(F), (i)(G), (i)(H), or (i)(I) of this section shall apply coating on any such coating line, during any day, whose daily-weighted average VOM content exceeds the emission limitation to which the coatings are subject.

(B) No owner or operator of a miscellaneous metal parts and products coating line subject to the limitations of paragraph (e)(1)(i)(J) of this section shall apply coatings to miscellaneous metal parts or products on the subject coating line unless the requirements in paragraph (e)(1)(ii)(B) (*1*) or (*2*) of this section are met.

(*1*) For each coating line which applies multiple coatings, all of which are subject to the same numerical emission limitation within paragraph (e)(1)(i)(J) of this section, during the same day (*e.g.*, all coatings used on the line are subject to 0.42 kg/l [3.5 lbs/gal]), the daily-weighted average VOM content shall not exceed the coating VOM content limit corresponding to the category of coating used, or

(*2*) For each coating line which applies coatings from more than one of the four coating categories in paragraph (e)(1)(i)(J) of this section, during the same day, the owner or operator shall submit to and receive approval from the Administrator for a site-specific FIP revision. To receive approval, the requirements of USEPA's Emissions Trading Policy Statement (and related policy) must be satisfied.

(C) No owner or operator of a can coating facility subject to the limitations of pargraph (e)(1)(i)(B) of this section shall operate the subject coating facility using a coating with a VOM content in excess of the limitations specified in paragrpah (e)(1)(i)(B) of this section unless all of the following requirements are met:

(*1*) An alternative daily emission limitation shall be determined according to paragraph (e)(1)(ii)(C)(*2*) of this section. Actual daily emissions shall never exceed the alternative daily emission limitation and shall be calculated by use of the following equation.

$$E_d = \sum_{i=1}^{n} V_i C_i$$

where:

E_d=Actual VOM emissions for the day in units of kg/day (lbs/day),

i=Subscript denoting a specific coating applied,

n=Total number of coatings applied in the can coating operation,

V_i=Volume of each coating applied for the day in units of l/day (gal/day) of coating (minus water and any compounds which are specifically exempted from the definition of VOM), and

C_i=The VOM content of each coating as applied in units of kg VOM/l (lbs VOM/gal) of coating (minus water and any compounds which are specifically exempted from the definition of VOM).

(*2*) The alternative daily emission limitation (A_d) shall be determined on a daily basis as follows:

$$A_d = \sum_{i=1}^{n} \frac{V_i L_i (D_i - C_i)}{(D_i - L_i)}$$

where:

A_d=The VOM emissions allowed for the day in units of kg/day (lbs/day),

i=Subscript denoting a specific coating applied,

n=Total number of surface coatings applied in the can coating operation,

C_i=The VOM content of each surface coating as applied in units of kg VOM/l (lbs VOM/gal) of coating (minus water and any compounds which are specifically exempted from the definition of VOM),

D_i=The density of VOM in each coating applied. For the purposes of calculating A_d, the density is 0.882 kg VOM/l VOM (7.36 lbs VOM/gal VOM),

V_i=Volume of each surface coating applied for the day in units of l (gal) of coating (minus water and any compounds which are specifically exempted from the definition of VOM),

L_i=The VOM emission limitation for each surface coating applied as specified in paragraph (e)(1)(i)(B) of this section in units of kg VOM/l (lbs VOM/gal) of coating (minus water and any compounds which are specifically exempted from the definition of VOM).

(D) No owner or operator of a heavy off-highway vehicle products coating line subject to the limitations of paragraph (e)(1)(i)(K) of this section shall apply coatings to heavy off-highway vehicle products on the subject coating line unless the requirements of paragraph (e)(1)(ii)(D) (*1*) or (*2*) of this section are met.

(*1*) For each coating line which applies multiple coatings, all of which are subject to the same numerical emission limitation within paragraph (e)(1)(i)(K) of this section, during the same day (*e.g.*, all coatings used on the

line are subject to 0.42 kg/l [3.5 lbs/gal]), the daily-weighted average VOM content shall not exceed the coating VOM content limit corresponding to the category of coating used, or

(*2*) For each coating line which applies coatings subject to more than one numerical emission limitation in paragraph (e)(1)(i)(K) of this section, during the same day, the owner or operator shall submit to and receive approval from the Administrator for a site-specific FIP revision. To receive approval, the requirements of USEPA's Emissions Trading Policy Statement (and related policy) must be satisfied.

(E) No owner or operator of a wood furniture coating line subject to the limitations of paragraph (e)(1)(i)(L) of this section shall apply coatings to wood furniture on the subject coating line unless the requirements of paragraph (e)(1)(ii)(E) (*1*) or (*2*) of this section, in addition to the requirements specified in the note to paragraph (e)(1)(i)(L) of this section, are met.

(*1*) For each coating line which applies multiple coatings, all of which are subject to the same numerical emission limitation within paragraph (e)(1)(i)(L) of this section, during the same day (e.g., all coatings used on the line are subject to 0.67 kg/l [5.6 lbs/gal]), the daily-weighted average VOM content shall not exceed the coating VOM content limit corresponding to the category of coating used, or

(*2*) For each coating line which applies coatings subject to more than one numerical emission limitation in paragraph (e)(1)(i)(L) of this section, during the same day, the owner or operator shall submit to and receive approval from the Administrator for a site-specific FIP revision. To receive approval, the requirements of USEPA's Emissions Trading Policy Statement (and related policy) must be satisfied.

(F) No owner or operator of an existing diesel-electric locomotive coating line in Cook County, subject to the limitations of paragraph (e)(1)(i)(M) of this section shall apply coatings to diesel-electric locomotives on the subject coating line unless the requirements of paragraph (e)(1)(ii)(F) (*1*) or (*2*) of this section are met.

(*1*) For each coating line which applies multiple coatings, all of which are subject to the same numerical emission limitation within paragraph (e)(1)(i)(M) of this section, during the same day (e.g., all coatings used on the line are subject to 0.42 kg/l [3.5 lbs/gal]), the daily-weighted average VOM content shall not exceed the coating VOM content limit corresponding to the category of coating used, or

(*2*) For each coating line which applies coatings subject to more than one numerical emission limitation in paragraph (e)(1)(i)(M) of this section, during the same day, the owner or operator shall submit to and receive approval from the Administrator for a site-specific FIP revision. To receive approval, the requirements of USEPA's Emissions Trading Policy Statement (and related policy) must be satisfied.

(iii) Limitations in terms of kg (lbs) of VOM emissions per l (gal) of solids as applied at each coating applicator shall be determined by the following equation:

$$S = \frac{C}{1-(C/D)}$$

where:

S=The limitation on VOM emissions in terms of kg VOM/l (lbs VOM/gal) of solids,

C=The limitation on VOM emissions in terms of kg/l (lbs/gal) of coating (minus water and any compounds which are specifically excluded from the definition of VOM) specified in paragraph (e)(1)(i) of this section,

D=The density of VOM in the coating. For the purposes of calculating S, the density is 0.882 kg VOM/l VOM (7.36 lbs VOM/gal VOM).

(2) *Alternative emission limitations.* Any owner or operator of a coating line subject to paragraph (e)(1) of this section may comply with this paragraph, rather than with paragraph (e)(1) of this section, if a capture system and control device are operated at all times and the owner or operator demonstrates compliance with paragraphs (e)(2) (ii), (iii), (iv), (v), (vi) or (vii) of this section (depending upon the source category) through the applicable coating analysis and capture system and control device efficiency test methods and procedures specified in paragraph (a)(4) of this section and the recordkeeping and reporting requirements specified in paragraph (e)(6)(iv) of this

section; and the control device is equipped with the applicable monitoring equipment specified in paragraph (a)(4)(iv) of this section and the monitoring equipment is installed, calibrated, operated and maintained according to vendor specifications at all times the control device is in use. The use of a capture system and control device, which does not demonstrate compliance with paragraph (e)(2) (ii), (iii), (iv), (v), (vi), or (vii), may only be used as an alternative to compliance with paragraph (e)(1) of this section if approved as a FIP revision.

(i) *Alternative add-on control methodologies.* (A) The coating line is equipped with a capture system and control device that provides 81 percent reduction in the overall emissions of VOM from the coating line and the control device has a 90 percent efficiency, or

(B) The system used to control VOM from the coating line is demonstrated to have an overall efficiency sufficient to limit VOM emissions to no more than what is allowed under paragraph (e)(1) of this section. Use of any control system other than an afterburner, carbon absorption, condensation, or absorption scrubber system can only be allowed if approved by the Administrator as a SIP or FIP revision. Transfer efficiency credits can only be allowed if approved by the Administrator as a SIP or FIP revision. Baseline transfer efficiencies and transfer efficiency test methods must be approved by the Administrator.

Such overall efficiency is to be determined as follows:

(*1*) Obtain the emission limitation from the appropriate paragraph in (e)(1) of this section,

(*2*) Calculate ''S'' according to the equation in paragraph (e)(1)(iii) of this section,

(*3*) Calculate the overall efficiency required according to paragraph (a)(4)(v) of this section. For the purposes of calculating this value, according to the equation in (a)(4)(v)(B) of this section VOM_1 is equal to the value of ''S'' as determined above in (i)(B)(*2*).

(ii) No owner or operator of a coating line subject to only one of the emission limitations from among paragraph (e)(1)(i)(A)(*1*), (e)(1)(i)(A)(*2*), (e)(1)(i)(A)(*4*), (e)(1)(i)(C), (e)(1)(i)(D), (e)(1)(i)(E), (e)(1)(i)(F), (e)(1)(i)(G), (e)(1)(i)(H), or (e)(1)(i)(I) of this section and equipped with a capture system and control device shall operate the subject coating line unless the requirements in paragraph (e)(2)(i) (A) or (B) of this section are met. No owner or operator of a coating line subject to paragraph (e)(1)(i)(A)(*3*) of this section and equipped with a capture system and control device shall operate the coating line unless the owner or operator demonstrates compliance with the topcoat limitation in accordance with the topcoat protocol for automobile or light-duty trucks referenced in paragraph (a)(4)(ii) of this section.

(iii) No owner or operator of a miscellaneous metal parts and products coating line which applies one or more coatings during the same day, all of which are subject to the same numerical emission limitation within paragraph (e)(1)(i)(J) of this section (e.g., all coatings used on the line are subject to 0.42 kg/l [3.5 lbs/gal]), and which is equipped with a capture system and control device shall operate the subject coating line unless the requirements in paragraph (e)(2)(i) (A) or (B) of this section are met.

(iv) No owner or operator of a heavy off-highway vehicle products coating line which applies one or more coatings during the same day, all of which are subject to the same numerical emission limitation within paragraph (e)(1)(i)(K) of this section (e.g., all coatings used on the line are subject to 0.42 kg/l [3.5 lbs/gal]), and which is equipped with a capture system and control device shall operate the subject coating line unless the requirements in paragraph (e)(2)(i) (A) or (B) of this section are met.

(v) No owner or operator of an existing diesel-electric locomotive coating line in Cook County which applies one or more coatings during the same day, all of which are subject to the same numerical emission limitation within paragraph (e)(1)(i)(M) of this section (e.g., all coatings used on the line are subject to 0.42 kg/l [3.5 lbs/gals]), and which is equipped with a capture system and control device shall operate

the subject coating line unless the requirements in paragraph (e)(2)(i) (A) or (B) of this section are met.

(vi) No owner or operator of a wood furniture coating line which applies one or more coatings during the same day, all of which are subject to the same numerical emission limitation within paragraph (e)(1)(i)(L) (*e.g.,* all coatings used on the line are subject to 0.67 kg/l [5.6 lbs/gal]), and which is equipped with a capture system and control device shall operate the subject coating line unless the requirements in paragraph (e)(2)(i) (A) or (B) of this section are met. If compliance is achieved by meeting the requirements in paragraph (e)(2)(i)(B) of this section, then the provisions in the note to paragraph (e)(1)(i)(L) of this section must also be met.

(vii) No owner or operator of a can coating facility and equipped with a capture system and control device shall operate the subject coating facility unless the requirements in paragraph (e)(2)(vii) (A) or (B) of this section are met.

(A) An alternative daily emission limitation shall be determined according to paragraph (e)(1)(ii)(C)(*2*) of this section. Actual daily emissions shall never exceed the alternative daily emission limitation and shall be calculated by use of the following equation:

$$E_d = \sum_{i=1}^{n} V_i C_i (1 - F_i)$$

where:

E_d=Actual VOM emissions for the day in units of kg/day (lbs/day),

i=Subscript denoting the specific coating applied,

n=Total number of surface coatings as applied in the can coating operation,

V_i=Volume of each coating as applied for the day in units of 1/day (gal/day) of coating (minus water and any compounds which are specifically exempted from the definition of VOM),

C_i=The VOM content of each coating as applied in units of kg VOM/l (lbs VOM/gal) of coating (minus water and any compounds which are specifically exempted from the definition of VOM), and

F_i=Fraction, by weight, of VOM emissions from the surface coating, reduced or prevented from being emitted to the ambient air. This is the overall efficiency of the capture system and control device.

(B) The coating line is equipped with a capture system and control device that provide 75 percent reduction in the overall emissions of VOM from the coating line and the control device has a 90 percent efficiency.

(3) *Exemptions from emission limitations*—(i) *Exemptions for all source categories except wood furniture coating.* The limitations of paragraph (e) of this section shall not apply to coating lines within a facility, that otherwise would be subject to the same subparagraph of paragraph (e)(1)(i) of this section (because they belong to the same source category, e.g. can coating), provided that combined actual emissions of VOM from all lines at the facility subject to that subparagraph never exceed 6.8 kg/day (15 lbs/day) before the application of capture systems and control devices. (For example, can coating lines within a plant would not be subject to the limitations of subparagraph (e)(1)(i)(B) of this section if the combined actual emissions of VOM from the can coating lines never exceed 6.8 kg/day (15 lbs/day) before the application of capture systems and control devices.) Volatile organic material emissions from heavy off-highway vehicle products coating lines must be combined with VOM emissions from miscellaneous metal parts and products coating lines to determine applicability. Any owner or operator of a coating facility shall comply with the applicable coating analysis test methods and procedures specified in paragraph (a)(4)(i) of this section and the recordkeeping and reporting requirements specified in paragraph (e)(6)(i) of this section if total VOM emissions from the subject coating lines are always less than or equal to 6.8 kg/day (15 lbs/day) before the application of capture systems and control devices and, therefore, are not subject to the limitations of paragraph (e)(1) of this section. Once a category of coating lines at a facility is subject to the limitations in paragraph (e)(1) of this section, the coating lines are always subject to the limitations in paragraph (e)(1) of this section.

(ii) *Applicability for wood furniture coating.* (A) The limitations of paragraph (e) of this section shall apply to a plant's wood furniture coating lines if the plant contains process emission sources, not regulated by paragraphs (d), (e) (excluding paragraph (e)(1)(i)(L)), (h) (excluding paragraph (h)(5)), (i), (j), or (q)(1), or subparts B, Q (excluding sections 215.432 and 215.436), R (excluding sections 215.447, 215.450, and 215.452), S, V, X, Y (sections 215.582–215.584), or Z of 35 Ill. Adm. Code 215 (incorporated by reference as specified in 40 CFR 52.742), which as a group both:

(*1*) Have maximum theoretical emissions of 91 Mg (100 tons) or more per calendar year of VOM if no air pollution control equipment were used, and

(*2*) Are not limited to less than 91 Mg (100 tons) of VOM per calendar year if no air pollution control equipment were used, through production or capacity limitations contained in a federally enforceable construction permit or SIP or FIP version.

(B) If a plant ceases to fulfill the criteria of paragraph (e)(3)(ii)(A) of this section, the limitations of paragraph (e)(1)(i)(L) of this section shall continue to apply to any wood furniture coating line which was ever subject to the limitations of paragraph (e)(1)(i)(L) of this section.

(C) For the purposes of paragraph (e)(3)(ii) of this section, an emission source shall be considered regulated by a subpart (of the Illinois rules), section, or paragraph if it is subject to the limitations of that subpart (of the Illinois rules), section, or paragraph. An emission source is not considered regulated by a subpart (of the Illinois rules), section, or paragraph if its emissions are below the applicability cutoff level or if the source is covered by an exemption.

(D) Any owner or operator of a wood furniture coating line to which the limitations of paragraph (e) of this section are not applicable due to the criteria in paragraph (e)(3)(ii) of this section shall, upon request by the Administrator, submit records to the Administrator within 30 calendar days from the date of the request that document that the coating line is exempt from the limitations of paragraph (e) of this section.

(4) *Exemption from general rule on use of organic material.* No owner or operator of a coating line subject to the limitations of paragraph (e)(1) of this section is required to meet the limitations of subpart K (section 215.301 or 215.302) of 35 Ill. Adm. Code 215 (incorporated by reference as specified in 40 CFR 52.742), after the date by which the coating line is required to meet paragraph (e)(1) of this section.

(5) *Compliance schedule.* Except as specified in paragraph (e)(7) of this section, every owner or operator of a coating line (of a type included within paragraph (e)(1)(i) of this section) shall comply with the requirements of paragraph (e)(1),(e)(2) or (e)(3) of this section and paragraph (e)(6) of this section in accordance with the appropriate compliance schedule as specified in paragraph (e)(5)(i),(ii),(iii) or (iv) of this section.

(i) No owner or operator of a coating line which is exempt from the limitations of paragraph (e)(1) of this section because of the criteria in paragraph (e)(3)(i) of this section shall operate said coating line on or after July 1, 1991, unless the owner or operator has complied with, and continues to comply with, paragraph (e)(6)(i) of this section. Wood furniture coating lines are not subject to paragraph (e)(6)(i) of this section.

(ii) No owner or operator of a coating line complying by means of paragraph (e)(1)(i) of this section shall operate said coating line on or after July 1, 1991, unless the owner or operator has complied with, and continues to comply with, paragraphs (e)(1)(i) and (e)(6)(ii) of this section.

(iii) No owner or operator of a coating line complying by means of paragraph (e)(1)(ii) of this section shall operate said coating line on or after July 1, 1991, unless the owner or operator has complied with, and continues to comply with, paragraphs (e)(1)(ii) and (e)(6)(iii) of this section.

(iv) No owner or operator of a coating line complying by means of paragraph (e)(2) of this section shall operate said coating line on or after July 1, 1991, unless the owner or operator has complied with, and continues to comply

with, paragraphs (e)(2) and (e)(6)(iv) of this section.

(6) *Recordkeeping and reporting.* The VOM content of each coating and the efficiency of each capture system and control device shall be determined by the applicable test methods and procedures specified in paragraph (a)(4) of this section to establish the records required under paragraph (e)(6) of this section.

(i) Any owner or operator of a coating line which is exempted from the limitations of paragraph (e)(1) of this section because of paragraph (e)(3)(i) of this section shall comply with the following:

(A) By July 1, 1991, the owner or operator of a facility referenced in paragraph (e)(6)(i) of this section shall certify to the Administrator that the facility is exempt under the provisions of paragraph (e)(3)(i) of this section. Such certification shall include:

(*1*) A declaration that the facility is exempt from the limitations of paragraph (e)(1) of this section because of paragraph (e)(3)(i) of this section; and

(*2*) Calculations which demonstrate that the combined VOM emissions from all coating lines at the facility never exceed 6.8 kg (15 lbs) per day before the application of capture systems and control devices. The following equation shall be used to calculate total VOM emissions:

$$T_e = \sum_{j=1}^{m} \sum_{i=1}^{n} (A_i B_i)j$$

where:

T_e=Total VOM emissions from coating lines at a facility each day before the application of capture systems and control devices in units of kg/day (lbs/day),

m=Number of coating lines at the facility,

j=Subscript denoting an individual coating line,

n=Number of different coatings as applied each day on each coating line at the facility,

i=Subscript denoting an individual coating,

A_i=Weight of VOM per volume of each coating (minus water and any compounds which are specifically exempted from the definition of VOM) as applied each day on each coating line at the facility in units of kg VOM/l (lbs VOM/gal), and

B_i=Volume of each coating (minus water and any compounds which are specifically exempted from the definition of VOM) as applied each day on each coating line at the facility in units of l/day (gal/day). The instrument or method by which the owner or operator accurately measured or calculated the volume of each coating as applied on each coating line each day shall be described in the certification to the Administrator.

(B) On and after July 1, 1991, the owner or operator of a facility referenced in paragraph (e)(6)(i) of this section shall collect and record all of the following information each day for each coating line and maintain the information at the facility for a period of three years:

(*1*) The name and identification number of each coating as applied on each coating line.

(*2*) The weight of VOM per volume and the volume of each coating (minus water and any compounds which are specifically exempted from the definition of VOM) as applied each day on each coating line.

(C) On and after July 1, 1991, the owner or operator of a facility exempted from the limitations of paragraph (e)(1) of this section because of paragraph (e)(3)(i) of this section shall notify the Administrator of any record showing that total VOM emissions from the coating facility exceed 6.8 kg (15 lbs) in any day before the application of capture systems and control devices shall be reported by sending a copy of such record to the Administrator within 30 days after the exceedance occurs.

(ii) Any owner or operator of a coating line subject to the limitations of paragraph (e)(1) of this section and complying by means of paragraph (e)(1)(i) of this section shall comply with the following:

(A) By July 1, 1991, or upon initial start-up of a new coating line, or upon changing the method of compliance from an existing subject coating line from paragraph (e)(1)(ii) or paragraph (e)(2) to paragraph (e)(1)(i) of this section; the owner or operator of a subject coating line shall certify to the Administrator that the coating line will be in compliance with paragraph (e)(1)(i) of this section on and after July 1, 1991, or

on and after the initial start-up date. Such certification shall include:

(*1*) The name and identification number of each coating as applied on each coating line.

(*2*) The weight of VOM per volume of each coating (minus water and any compounds which are specifically exempted from the definition of VOM) as applied each day on each coating line.

(*3*) For coating lines subject to paragraph (e)(1)(i)(A)(*3*) of this section, certification shall include:

(*i*) The name and identification number of each coating line which will comply by means of paragraph (e)(1)(i)(A)(*3*) of this section,

(*ii*) The name and identification number of each coating as applied on each coating line,

(*iii*) The weight of VOM per volume of each coating as applied on each coating line,

(*iv*) The instrument or method by which the owner or operator will accurately measure or calculate the volume of each coating as applied each day on each coating line,

(*v*) The method by which the owner or operator will create and maintain records each day as required in paragraph (e)(6)(ii)(B) of this section for coating lines subject to paragraph (e)(1)(i)(A)(*3*) of this section,

(*vi*) An example format in which the records required in paragraph (e)(6)(ii)(B) of this section for coating lines subject to paragraph (e)(1)(i)(A)(*3*) of this section.

(B) On and after July 1, 1991, or on and after the initial start-up date, the owner or operator of a coating line subject to the limitations of paragraph (e)(1) of this section and complying by means of paragraph (e)(1)(i) of this section shall collect and record all of the following information each day for each coating line and maintain the information at the facility for a period of three years:

(*1*) The name and identification number of each coating as applied on each coating line.

(*2*) The weight of VOM per volume of each coating (minus water and any compounds which are specifically exempted from the definition of VOM) as applied each day on each coating line.

(*3*) For coating lines subject to paragraph (e)(1)(i)(A)(*3*) of this section, the owner or operator shall maintain all records necessary to calculate the daily-weighted average VOM content from the coating line in accordance with the proposal submitted, and approved by the Administrator, pursuant to paragraph (e)(1)(A)(*3*) of this section.

(C) On and after July 1, 1991, the owner or operator of a subject coating line shall notify the Administrator in the following instances:

(*1*) Any record showing violation of paragraph (e)(1)(i) of this section shall be reported by sending a copy of such record to the Administrator within 30 days following the occurrence of the violation, except that any record showing a violation of paragraph (e)(1)(i)(A)(*3*) of this section shall be reported by sending a copy of such record to the Administrator within 15 days from the end of the month in which the violation occurred.

(*2*) At least 30 calendar days before changing the method of compliance with paragraph (e)(1) of this section from paragraph (e)(1)(i) to paragraph (e)(1)(ii) or paragraph (e)(2) of this section, the owner or operator shall comply with all requirements of paragraph (e)(6) (iii)(A) or (iv)(A) of this section, respectively. Upon changing the method of compliance with paragraph (e)(1) of this section from paragraph (e)(1)(i) to paragraph (e)(1)(ii) or paragraph (e)(2) of this section, the owner or operator shall comply with all requirements of paragraph (e)(6) (iii) or (iv) of this section, respectively.

(*3*) For coating lines subject to paragraph (e)(1)(i)(A)(*3*) of this section, the owner or operator shall notify the Administrator of any change to the topcoating operation at least 30 days before the change is effected. The Administrator shall determine whether or not recertification testing is required. If the Administrator determines that recertification testing is required, then the owner or operator shall submit a proposal to the Administrator to test within 30 days and retest within 30 days of the Administrator's approval of the proposal.

(iii) Any owner or operator of a coating line subject to the limitations of paragraph (e)(1) of this section and

complying by means of paragraph (e)(1)(ii) of this section shall comply with the following:

(A) By July 1, 1991, or upon initial start-up of a new coating line, or upon changing the method of compliance for an existing subject coating line from paragraph (e)(1)(i) or paragraph (e)(2) to paragraph (e)(1)(ii) of this section; the owner or operator of the subject coating line shall certify to the Administrator that the coating line will be in compliance with paragraph (e)(1)(ii) of this section on and after July 1, 1991, or on and after the initial start-up date. Such certification shall include:

(*1*) The name and identification number of each coating line which will comply by means of paragraph (e)(1)(ii) of this section.

(*2*) The name and identification number of each coating as applied on each coating line.

(*3*) The weight of VOM per volume and the volume of each coating (minus water and any compounds which are specifically exempted from the definition of VOM) as applied each day on each coating line.

(*4*) The instrument or method by which the owner or operator will accurately measure or calculate the volume of each coating as applied each day on each coating line.

(*5*) The method by which the owner or operator will create and maintain records each day as required in paragraph (e)(6)(iii)(B) of this section.

(*6*) An example of the format in which the records required in paragraph (e)(6)(iii)(B) of this section will be kept.

(B) On and after July 1, 1991, or on and after the initial start-up date, the owner or operator of a coating line subject to the limitations of paragraph (e)(1) of this section and complying by means of paragraph (e)(1)(ii) of this section, shall collect and record all of the following information each day for each coating line and maintain the information at the facility for a period of three years:

(*1*) The name and identification number of each coating as applied on each coating line.

(*2*) The weight of VOM per volume and the volume of each coating (minus water and any compounds which are specifically exempted from the definition of VOM) as applied each day on each coating line.

(*3*) The daily-weighted average VOM content of all coatings as applied on each coating line as defined in paragraph (a)(3) of this section.

(C) On and after July 1, 1991, the owner or operator of a subject coating line shall notify the Administrator in the following instances:

(*1*) Any record showing violation of paragraph (e)(1)(ii) of this section shall be reported by sending a copy of such record to the Administrator within 30 days following the occurrence of the violation.

(*2*) At least 30 calendar days before changing the method of compliance with paragraph (e) from paragraph (e)(1)(ii) to paragraph (e)(1)(i) or paragraph (e)(2) of this section, the owner or operator shall comply with all requirements of paragraph (e)(6)(ii)(A) or (iv)(A), respectively. Upon changing the method of compliance with paragraph (e) from paragraph (e)(1)(ii) to paragraph (e)(1)(i) or paragraph (e)(2) of this section, the owner or operator shall comply with all requirements of paragraph (e)(6)(ii) or (iv), respectively.

(iv) Any operator or owner of a coating line subject to the limitations of paragraph (e)(2) of this section and complying by means of paragraph (e)(2)(ii), (iii), (iv), (v), (vi) or (vii) of this section shall comply with the following:

(A) By July 1, 1991, or upon initial start-up of a new coating line, or upon changing the method of compliance for an existing coating line from paragraph (e)(1) (i) or (ii) to paragraph (e)(2) of this section; the owner or operator of the subject coating line shall perform all tests and submit to the Administrator the results of all tests and calculations necessary to demonstrate that the subject coating line will be in compliance with paragraph (e)(2) of this section on and after July 1, 1991, or on and after the initial start-up date.

(B) On and after July 1, 1991, or on and after the initial start-up date, the owner or operator of a coating line subject to the limitations of paragraph (e)(2) of this section and complying by means of paragraph (e)(2) (ii), (iii), (iv),

(v), (vi) or (vii) of this section shall collect and record all of the following information each day for each coating line and maintain the information at the facility for a period of three years:

(*1*) The weight of VOM per volume of coating solids as applied each day on each coating line, if complying pursuant to paragraph (e)(2)(i)(B) of this section.

(*2*) Control device monitoring data.

(*3*) A log operating time for the capture system, control device, monitoring equipment and the associated coating line.

(*4*) A maintenance log for the capture system, control device and monitoring equipment detailing all routine and non-routine maintenance performed including dates and duration of any outages.

(C) On and after July 1, 1991, the owner or operator of a subject coating line shall notify the Administrator in the following instances:

(*1*) Any record showing violation of paragraph (e)(2) of this section shall be reported by sending a copy of such record to the Administrator within 30 days following the occurrence of the violation.

(*2*) At least 30 calendar days before changing the method of compliance with paragraph (e) from paragraph (e)(2) to paragraph (e)(1)(i) or paragraph (e)(1)(ii) of this section, the owner or operator shall comply with all requirements of paragraph (e)(6)(ii)(A) or (iii)(A) of this section, respectively. Upon changing the method of compliance with paragraph (e) from paragraph (e)(2) to paragraph (e)(1)(i) or paragraph (e)(1)(ii) of this section, the owner or operator shall comply with all requirements of paragraph (e)(6)(ii) or (iii) of this section, respectively.

(*7*) *Compliance schedule for diesel electric locomotive coatings.* Notwithstanding any other provision of this subpart, the compliance date for the emission limitations and standards for ''topcoat'' and ''final repair coat'' operations only as applied to General Motors Corporation at their diesel electric locomotive coating lines in Cook County, Illinois, codified at 40 CFR 52.741(e)(1)(i)(M) (*2*) and (*3*) is specified in this paragraph (e)(7). Compliance with the requirements of paragraph (e)(1), (e)(2) or (e)(3) of this section and paragraph (e)(6) of this section must be in accordance with the appropriate compliance schedule as specified in paragraph (e)(7)(i),(ii),(iii), or (iv) of this section.

(i) No owner or operator of a coating line which is exempt from the limitations of paragraph (e)(1) of this section because of the criteria in paragraph (e)(3)(i) of this section shall operate said coating line on or after March 25, 1995, unless the owner or operator has complied with, and continues to comply with, paragraph (e)(6)(i) of this section.

(ii) No owner or operator of a coating line complying by means of paragraph (e)(1)(i) of this section shall operate said coating line on or after March 25, 1995, unless the owner or operator has complied with, and continues to comply with, paragraph (e)(1)(i) and (e)(6)(ii) of this section.

(iii) No owner or operator of a coating line complying by means of paragraph (e)(1)(ii) of this section shall operate said coating line on or after March 25, 1995, unless the owner or operator has complied with, and continues to comply with, paragraphs (e)(1)(ii) and (e)(6)(iii) of this section.

(iv) No owner or operator of a coating line complying by means of paragraph (e)(2) of this section shall operate said coating line on or after March 25, 1995, unless the owner or operator has complied with, and continues to comply with, paragraphs (e)(2) and (e)(6)(iv) of this section.

(8) The control requirements in this paragraph apply to the wood coating line, which coats wooden globe stand components, at Replogle Globes, Inc. (Replogle) Broadview facility in Cook County, Illinois, instead of the control requirements in paragraphs (e)(1) and (e)(2) of this section. Compliance with this paragraph must be demonstrated through the applicable coating analysis test methods and procedures specified in paragraph (a)(4)(i) of this section.

(i) After October 6, 1991, no coatings shall at any time be applied which exceed the following emission limitations for the specified coating.

(A) 6.59 pounds (lbs) Volatile Organic Material (VOM) per gallon of stain

(minus water and any compounds which are specifically exempted from the definition of VOM) as applied to coat wooden globe stand components. Such stain consists of #9250 Walnut NGR Stain (RGI #W06000100), #9974 Cherry NGR Stain (RGI #W06003500) and #9943 Ash NGR Stain (RGI #W06003600). The Administrator must be notified at least ten (10) days prior to the use of any replacement stains.

(B) 5.53 lbs VOM per gallon of Sanding Sealer (minus water and any compounds which are specifically exempted from the definition of VOM) as applied to coat wooden globe stand components. Such sealer consists of #15304 High Build Sanding Sealer (RGI #W06003700). The Administrator must be notified at least ten (10) days prior to the use of any replacement sanding sealer.

(C) 5.20 lbs VOM per gallon of lacquer (minus water and any compounds which are specifically exempted from the definition of VOM) as applied to coat wooden globe stand components. Such lacquer consists of #15352 High Build Lacquer (RGI #W06003300). The Administrator shall be notified at least ten (10) days prior to the use of any replacement lacquer.

(ii) After October 6, 1991, the volume of coatings used shall not exceed the following:

(A) 5,000 gallons per year total for all coatings specified in paragraph (e)(8)(i)(A) of this section. The yearly volume of coatings used are to be calculated as follows:

(*1*) Compute the volume of specified coating used each month by the 15th of the following month.

(*2*) By the 15th of each month, add the monthly coating use for the 12 previous months (to obtain the yearly volume of coatings used).

(B) 4,000 gallons per year total for all coatings specified in paragraph (e)(8)(i)(B) of this section. The yearly volume of the coatings used are to be calculated as specified in paragraphs (e)(8)(ii)(A)(1) and (e)(8)(ii)(A)(2) of this section.

(C) 5,000 gallons per year total for all coatings specified in paragraph (e)(8)(i)(C) of this section. The yearly volume of coatings used are to be calculated as specified in paragraphs (e)(8)(ii)(A)(1) and (e)(8)(ii)(A)(2) of this section.

(iii) Beginning on October 6, 1991, the owner and operator of the Replogle Globes, Inc. plant in Broadview, Illinois shall keep the following records for each month. All records shall be retained at Replogle Globes, Inc. for three (3) years and shall be made available to the Administrator on request.

(A) the name and identification number of each coating as applied on any wood coating line.

(B) The weight of VOM per volume (determined in accordance with the procedures in paragraph (a)(4)(i) of this section) and the volume of each coating (minus water and any compounds which are specifically exempted from the definition of VOM) as applied each month on any wood coating line.

(9) [Reserved]

(10) Until December 31, 1996, the control and recordkeeping requirements in this paragraph apply to the three solvent-based polyester paper coating lines (Lines C, D and E) at Riverside Laboratories' Kane County, Illinois facility, instead of the control requirements in paragraphs (e)(1) and (e)(2) of this section and the recordkeeping requirements in paragraph (e)(6) of this section. Compliance with this paragraph must be demonstrated through the applicable coating analysis test methods and procedures specified in paragraph (a)(4)(i) of this section. The requirements in paragraphs (e)(1), (e)(2), and (e)(6) of this section shall apply to Riverside on and after December 31, 1996.

(i) After December 21, 1995, no coatings shall at any time be applied on Lines C, D or E which exceed 3.5 pounds (lbs.) volatile organic material (VOM) per gallon of coating (minus water and any compounds which are specifically exempted from the definition of VOM), except as provided in paragraph (e)(10)(ii) of this section.

(ii) After December 21, 1995, the following specifically identified coatings may exceed 3.5 lbs. VOM per gallon of coating (minus water and any compounds which are specifically exempted from the definition of VOM) only if they are applied on Line E and they do not exceed the limits indicated below (minus water and any compounds

which are specifically exempted from the definition of VOM):

EXP–5027—4.34 lbs./gallon
PD 75 CLR—4.19 lbs./gallon
PD 75 BRN—4.18 lbs./gallon
SQZ–54—3.88 lbs./gallon
SPX–34GL—3.51 lbs./gallon

(iii) That portion of Riverside's polyester production which is manufactured with the use of any VOC, from Lines C, D, and E, may not exceed the following levels: 35 million square feet per year during and after 1992, 29 million square feet per year during and after 1994, and 25 million square feet during 1996. Compliance with this requirement shall be determined by adding the polyester production from any 12 consecutive months during and after the years indicated, through 1996. That is, the polyester production for any 12 consecutive months starting with January 1992 cannot exceed 35 million square feet; the polyester production from any 12 consecutive months starting with January 1994 cannot exceed 29 million square feet; and the polyester production for the twelve months from January through December 1996 cannot exceed 25 million square feet. Only those square feet of polyester whose production involves the use of VOC need to be restricted by the production levels in this paragraph (e)(10)(iii) of this section.

(iv) By December 21, 1995, Riverside shall certify to the Administrator that its polyester coating operations will be in compliance with paragraphs (e)(10)(i), (e)(10)(ii), and (e)(10)(iii) of this section. Such certification shall include the following:

(A) The name and identification number of each coating as applied on coating lines C, D and E.

(B) The weight of VOM per volume of each coating (minus water and any compounds which are specifically exempted from the definition of VOM) as applied on each coating line.

(v) The Administrator must be notified at least 10 days prior to the use of any polyester coating not previously identified pursuant to paragraph (e)(10)(iv) of this section. This notification must include the information specified in paragraphs (e)(10)(iv)(A) and (e)(10)(iv)(B) of this section.

(vi) On and after December 21, 1995, Riverside shall collect and record all of the following information each day for each coating and maintain the information at the facility for a period of 3 years:

(A) The name and identification number of each coating as applied.

(B) The weight of VOM per volume of each coating (minus water and any compounds which are specifically exempted from the definition of VOM) as applied each day.

(C) Any record showing a VOM content in excess of the emission limits in paragraph (e)(10)(i) or (e)(10)(ii) of this section shall be reported by sending a copy of such record to the Administrator within 30 days following its collection.

(D) Any VOM besides acetone used in any coating must be identified.

(vii) Starting with the first full month after December 21, 1995, Riverside shall collect and record the figures on polyester production (in square feet), for each month and maintain the information at the facility for a period of at least 3 years.

(viii) Regardless of any other provision of paragraph (e)(10) of this section, after August 21, 1995 no coating which contains any VOM other than acetone shall at any time be applied on Line C, D, or E which exceeds 2.9 lbs. VOM per gallon of coating (minus water and any compounds which are specifically exempted from the definition of VOM).

(f)—(g) [Reserved]

(h) *Printing and publishing*—(1) *Flexographic and rotogravure printing.* (i) No owner or operator of a subject flexographic, packaging rotogravure or publication rotogravure printing line shall apply at any time any coating or ink unless the VOM content does not exceed the limitation specified in either paragraph (h)(1)(i)(A) or (B) of this section. Compliance with this paragraph must be demonstrated through the applicable coating or ink analysis test methods and procedures specified in paragraph (a)(4)(i) of this section and the recordkeeping and reporting requirements specified in paragraph (h)(4)(ii) of this section. As an alternative to compliance with paragraph (h)(1)(i) of this section, a subject printing line may meet the requirements of

paragraph (h)(1)(ii) or (iii) of this section.

(A) Forty percent VOM by volume of the coating and ink (minus water and any compounds which are specifically exempted from the definition of VOM), or

(B) Twenty-five percent VOM by volume of the volatile content in the coating and ink.

(ii) No owner or operator of a subject flexographic, packaging rotogravure or publication rotogravure printing line shall apply coatings or inks on the subject printing line unless the weighted average, by volume, VOM content of all coatings and inks as applied each day on the subject printing line does not exceed the limitation specified in either paragraph (h)(1)(i)(A) (as determined by paragraph (h)(1)(ii)(A) or (h)(1)(i)(B) (as determined by paragraph (h)(1)(ii)(B) of this section. Compliance with this paragraph must be demonstrated through the applicable coating or ink analysis test methods and procedures specified in paragraph (a)(4)(i) of this section and the recordkeeping and reporting requirements specified in paragraph (h)(4)(iii) of this section.

(A) The following equation shall be used to determine if the weighted average VOM content of all coatings and inks as applied each day on the subject printing line exceeds the limitation specified in paragraph (h)(1)(i)(A) of this section.

$$VOM_{(i)(A)} = \frac{\sum_{i=1}^{n} C_i L_i (V_{si} + V_{VOMi})}{\sum_{i=1}^{n} L_i (V_{si} + V_{VOMi})}$$

where:

$VOM_{(i)(A)}$=The weighted average VOM content in units of percent VOM by volume of all coatings and inks (minus water and any compounds which are specifically exempted from the definition of VOM) used each day,

i=Subscript denoting a specific coating or ink as applied,

n=The number of different coatings and/or inks as applied each day on a printing line,

C_i=The VOM content in units of percent VOM by volume of each coating or ink as applied (minus water and any compounds which are specifically exempted from the defintion of VOM),

L_i=The liquid volume of each coating or ink as applied in units of l (gal),

V_{si}=The volume fraction of solids in each coating or ink as applied, and

V_{VOMi}=The volume fraction of VOM in each coating or ink as applied.

(B) The following equation shall be used to determine if the weighted average VOM content of all coatings and inks as applied each day on the subject printing line exceeds the limitation specified in paragraph (h)(1)(i)(B) of this section.

$$VOM_{(i)(B)} = \frac{\sum_{i=1}^{n} C_i L_i V_{VMi}}{\sum_{i=1}^{n} L_i V_{VMi}}$$

where:

$VOM_{(i)(B)}$=The weighted average VOM content in units of percent VOM by volume of the volatile content of all coatings and inks used each day,

i=Subscript denoting a specific coating or ink as applied,

n=The number of different coatings and/or inks as applied each day on each printing line,

C_i=The VOM content in units of percent VOM by volume of the volatile matter in each coating or ink as applied,

L_i=The liquid volume of each coating or ink as applied in units of l (gal), and

V_{VMi}=The volume fraction of volatile matter in each coating or ink as applied.

(iii) No owner or operator of a subject flexographic, packaging rotogravure or publication rotogravure printing line equipped with a capture system and control device shall operate the subject printing line unless the owner or operator meets the requirements in paragraph (h)(1)(iii) (A), (B) or (C) and paragraphs (h)(1)(iii) (D), (E) and (F) of this section.

(A) A carbon adsorption system is used which reduces the captured VOM emissions by at least 90 percent by weight, or

(B) An incineration system is used which reduces the captured VOM emissions by at least 90 percent by weight, or

(C) An alternative VOM emission reduction system is demonstrated to have at least a 90 percent control device efficiency and the alternative emission reduction system is approved by the Administrator as a SIP or FIP revisions, and

(D) The printing line is equipped with a capture system and control device that provides an overall reduction in VOM emissions of at least:

(*1*) 75 percent where a publication rotogravure printing line is employed, or

(*2*) 65 percent where a packaging rotogravure printing line is employed, or

(*3*) 60 percent where a flexographic printing line is employed, and

(E) The control device is equipped with the applicable monitoring equipment specified in paragraph (a)(4)(iv)(B) of this section and the monitoring equipment is installed, calibrated, operated and maintained according to vendor specifications at all times the control device is in use, and

(F) The capture system and control device are operated at all times when the subject printing line is in operation. The owner or operator shall demonstrate compliance with this paragraph by using the applicable capture system and control device test methods and procedures specified in paragraphs (a)(4) (iii) through (vi) of this section and by complying with the recordkeeping and reporting requirements specified in paragraph (h)(4)(iv) of this section.

(2) *Applicability*. (i) The limitations of paragraph (h)(1) of this section apply to all flexographic and rotogravure printing lines at a subject facility. All facilities with flexographic and/or rotogravure printing lines are subject facilities unless:

(A) Total maximum theoretical emissions of VOM from all flexographic and rotogravure printing line(s) at the facility never exceed 90.7 Mg (100 tons) per calendar year before the application of capture systems and control devices, or

(B) A federally enforceable construction permit or SIP or FIP revision for all flexographic and rotogravure printing line(s) at a facility requires the owner or operator to limit production or capacity of these printing line(s) to reduce total VOM emissions from all flexographic and rotogravure printing line(s) to 90.7 Mg (100 tons) or less per calendar year before the application of capture systems and control devices.

(ii) Upon achieving compliance with paragraph (h) of this section, the emission source is not required to meet subpart K (sections 215.301 or 215.302) of 35 Ill. Adm. Code 215 (incorporated by reference as specified in 40 CFR 52.742). Emission sources exempt from paragraph (h) of this section are subject to subpart K (sections 215.301 or 215.302). Rotogravure or flexographic equipment used for both roll printing and paper coating are subject to paragraph (h) of this section.

(iii) Once subject to the limitations of paragraph (h)(1) of this section, a flexographic or rotogravure printing line is always subject to the limitations of paragraph (h)(1) of this section.

(iv) Any owner or operator of any flexographic or rotogravure printing line that is exempt from the limitations of paragraph (h)(1) of this section because of the criteria in paragraph (h)(2) of this section is subject to the recordkeeping and reporting requirements specified in paragraph (h)(4)(i) of this section.

(3) *Compliance schedule.* Every owner or operator of a flexographic and/or rotogravure printing line shall comply with the applicable requirements of paragraph (h)(1) of this section and paragraph (h)(4) of this section in accordance with the applicable compliance schedule specified in paragraph (h)(3) (i), (ii), (iii) or (iv) of this section.

(i) No owner or operator of a flexographic or rotogravure printing line which is exempt from the limitations of paragraph (h)(1) of this section because the criteria in paragraph (h)(2) of this section shall operate said printing line on or after July 1, 1991, unless the owner or operator has complied with, and continues to comply with, paragraph (h)(4)(i) of this section.

(ii) No owner or operator of a flexographic or rotogravure printing line complying by means of paragraph (h)(1)(i) of this section shall operate said printing line on or after July 1, 1991, unless the owner or operator has

complied with, and continues to comply with, paragraphs (h)(1)(i) and (h)(4)(ii) of this section.

(iii) No owner or operator of a flexographic or rotogravure printing line complying by means of paragraph (h)(1)(ii) of this section shall operate said printing line on or after July 1, 1991, unless the owner or operator has complied with, and continues to comply with, paragraphs (h)(1)(ii) and (h)(4)(iii) of this section.

(iv) No owner or operator of a flexographic or rotogravure printing line complying by means of paragraph (h)(1)(iii) of this section shall operate said printing line on or after July 1, 1991, unless the owner or operator has complied with, and continues to comply with, paragraphs (h)(1)(iii) and (h)(4)(iv) of this section.

(4) *Recordkeeping and reporting.* The VOM content of each coating and ink and the efficiency of each capture system and control device shall be determined by the applicable test methods and procedures specified in paragraph (a)(4) of this section to establish the records required under paragraph (h)(4) of this section.

(i) Any owner or operator of a printing line which is exempted from the limitations of paragraph (h)(1) of this section because of the criteria in paragraph (h)(2) of this section shall comply with the following:

(A) By July 1, 1991, the owner or operator of a facility to which paragraph (h)(4)(i) of this section is applicable shall certify to the Administrator that the facility is exempt under the provisions of paragraph (h)(2) of this section. Such certification shall include:

(*1*) A declaration that the facility is exempt from the limitations of the criteria in paragraph (h)(1) of this section because of paragraph (h)(2) of this section, and

(*2*) Calculations which demonstrate that total maximum theoretical emissions of VOM from all flexographic and rotogravure printing lines at the facility never exceed 90.7 Mg (100 tons) per calendar year before the application of capture systems and control devices. Total maximum theoretical emissions of VOM for a flexograhpic or rotogravure printing facility is the sum of maximum theoretical emissions of VOM from each flexographic and rotogravure printing line at the facility. The following equation shall be used to calculate total maximum theoretical emissions of VOM per calendar year before the application of capture systems and control devices for each flexographic and rotogravure printing line at the facility:

$$E_p = A \times B$$

where:

E_p=Total maximum theoretical emissions of VOM from one flexographic or rotogravure printing line in units of kg/year (lbs/year),

A=Weight of VOM per volume of solids of the coating or ink with the highest VOM content as applied each year on the printing line in units of kg VOM/l (lbs VOM/gal) of coating or ink solids, and

B=Total volume of solids for all coatings and inks that can potentially be applied each year on the printing line in units of l/year (gal/year). The instrument and/or method by which the owner or operator accurately measured or calculated the volume of each coating and ink as applied and the amount that can potentially be applied each year on the printing line shall be described in the certification to the Administrator.

(B) On and after July 1, 1991, the owner or operator of a facility referenced in paragraph (h)(4)(i) of this section shall collect and record all of the following information each year for each printing line and maintain the information at the facility for a period of three years:

(*1*) The name and identification number of each coating and ink as applied on each printing line.

(*2*) The VOM content and the volume of each coating and ink as applied each year on each printing line.

(C) On and after July 1, 1991, the owner or operator of a facility exempted from the limitations of paragraph (h)(1) of this section because of the criteria in paragraph (h)(2) of this section shall notify the Administrator of any record showing that total maximum theoretical emissions of VOM from all printing lines exceed 90.7 Mg (100 tons) in any calendar year before the application of capture systems and control devices, shall be reported by sending a copy of such record to the Administrator within 30 days after the exceedance occurs.

(ii) Any owner or operator of a printing line subject to the limitations of paragraph (h)(1) of this section and complying by means of paragraph (h)(1)(i) of this section shall comply with the following:

(A) By July 1, 1991, or upon initial start-up of a new printing line, or upon changing the method of compliance from an existing subject printing line from paragraph (h)(1) (ii) or (iii) of this section to paragraph (h)(1)(i) of this section, the owner or operator of a subject printing line shall certify to the Administrator that the printing line will be in compliance with paragraph (h)(1)(i) of this section on and after July 1, 1991, or on and after the initial start-up date. Such certification shall include:

(*1*) The name and identification number of each coating and ink as applied on each printing line.

(*2*) The VOM content of each coating and ink as applied each day on each printing line.

(B) On and after July 1, 1991, or on and after the initial start-up date, the owner or operator of a printing line subject to the limitations of paragraph (h)(1) of this section and complying by means of paragraph (h)(1)(i) of this section shall collect and record all of the following information each day for each coating line and maintain the information at the facility for a period of three years:

(*1*) The name and identification number of each coating and ink as applied on each printing line.

(*2*) The VOM content of each coating and ink as applied each day on each printing line.

(C) On and after July 1, 1991, the owner or operator of a subject printing line shall notify the Administrator in the following instances:

(*1*) Any record showing violation of paragraph (h)(1)(i) of this section shall be reported by sending a copy of such record to the Administrator within 30 days following the occurrence of the violation.

(*2*) At least 30 calendar days before changing the method of compliance with paragraph (h)(1) of this section from paragraph (h)(1)(i) of this section to paragraph (h)(1) (ii) or (iii) of this section, the owner or operator shall comply with all requirements of paragraph (h)(4) (iii)(A) or (iv)(A) of this section respectively. Upon changing the method of compliance with paragraph (h)(1) from paragraph (h)(1)(i) to paragraph (h)(1) (ii) or (iii) of this section, the owner or operator shall comply with all requirements of paragraph (h)(4) (iii) or (iv) of this section, respectively.

(iii) Any owner or operator of a printing line subject to the limitations of paragraph (h)(1) of this section and complying by means of paragraph (h)(1)(ii) of this section shall comply with the following:

(A) By July 1, 1991, or upon initial start-up of a new printing line, or upon changing the method of compliance for an existing subject printing line from paragraph (h)(1) (i) or (iii) of this section to paragraph (h)(1)(ii) of this section, the owner or operator of the subject printing line shall certify to the Administrator that the printing line will be in compliance with paragraph (h)(1)(ii) of this section on and after July 1, 1991, or on and after the initial start-up date. Such certification shall include:

(*1*) The name and identification number of each printing line which will comply by means of paragraph (h)(1)(ii) of this section.

(*2*) The name and identification number of each coating and ink available for use on each printing line.

(*3*) The VOM content of each coating and ink as applied each day on each printing line.

(*4*) The instrument or method by which the owner or operator will accurately measure or calculate the volume of each coating and ink as applied each day on each printing line.

(*5*) The method by which the owner or operator will create and maintain records each day as required in paragraph (h)(4)(iii)(B) of this section.

(*6*) An example of the format in which the records required in paragraph (h)(4)(iii)(B) of this section will be kept.

(B) On and after July 1, 1991, or on and after the initial start-up date, the owner or operator of a printing line subject to the limitations of paragraph (h)(1) of this section and complying by means of paragraph (h)(1)(ii) of this

section shall collecting line and maintain the information at the facility for a period of three years:

(*1*) The name and identification number of each coating and ink as applied on each printing line.

(*2*) The VOM content and the volume of each coating and ink as applied each day on each printing line.

(*3*) The daily-weighted average VOM content of all coatings and inks as applied on each printing line.

(C) On and after July 1, 1991, the owner or operator of a subject printing line shall notify the Administrator in the following instances:

(*1*) Any record showing violation of paragraph (h)(1)(ii) of this section shall be reported by sending a copy of such record to the Administrator within 30 days following the occurrence of the violation.

(*2*) At least 30 calendar days before changing the method of compliance with paragraph (h)(1) of this section from paragraph (h)(1)(ii) to paragraph (h)(1)(i) or (iii) of this section, the owner or operator shall comply with all requirements of paragraph (h)(4)(ii)(A) or (iv)(A), respectively. Upon changing the method of compliance with paragraph (h)(1) from paragraph (h)(1)(ii) to paragraph (h)(1)(i) or (iii), the owner or operator shall comply with all requirements of paragraph (h)(4)(ii) or (iv) of this section, respectively.

(iv) Any owner or operator of a printing line subject to the limitations of paragraph (h)(1) of this section and complying by means of paragraph (h)(1)(iii) of this section shall comply with the following:

(A) By July 1, 1991, or upon initial start-up of a new printing line, or upon changing the method of compliance for an existing printing line from paragraph (h)(1)(i) or (ii) of this section to paragraph (h)(1)(iii) of this section, the owner or operator of the subject printing line shall perform all tests and submit to the Administrator the results of all tests and calculations necessary to demonstrate that the subject printing line will be in compliance with paragraph (h)(1)(iii) of this section on and after July 1, 1991, or on and after the initial start-up date.

(B) On and after July 1, 1991, or on and after the initial start-up date, the owner or operator of a printing line subject to the limitations of paragraph (h)(1) of this section and complying by means of paragraph (h)(1)(iii) of this section shall collect and record all of the following information each day for each printing line and maintain the information at the facility for a period of three years:

(*1*) Control device monitoring data.

(*2*) A log of operating time for the capture system, control device, monitoring equipment and the associated printing line.

(*3*) A maintenance log for the capture system, control device and monitoring equipment detailing all routine and non-routine maintenance performed including dates and duration of any outages.

(C) On and after July 1, 1991, the owner or operator of a subject printing line shall notify the Administration in the following instances:

(*1*) Any record showing violation of paragraph (h)(1)(iii) of this section shall be reported by sending a copy of such record to the Administrator within 30 days following the occurrence of the violation.

(*2*) At least 30 calendar days before changing the method of compliance with paragraph (h)(1) from paragraph (h)(1)(iii) to paragraph (h)(1) (i) or (ii), the owner or operator shall comply with all requirements of paragraph (h)(4) (ii)(A) or (iii)(A) of this section, respectively. Upon changing the method of compliance with paragraph (h)(1) from paragraph (h)(1)(iii) to paragraph (h)(1) (i) or (ii) of this section, the owner or operator shall comply with all requirements of paragraph (h)(4) (ii) or (iii) of this section, respectively.

(5) *Heatset-web-offset lithographic printing*—(i) *Applicability*. (A) The limitations of paragraph (h)(5)(ii) of this section apply to all heatset-web-offset lithographic printing lines at a subject facility. All facilities with heatset-web-offset lithographic printing lines are subject facilities unless:

(*1*) Total maximum theoretical emissions of VOM from all heatset-web-offset lithographic printing lines at the facility never exceed 90.7 Mg (100 tons)

per calendar year in the absence of air pollution control equipment, or

(*2*) A federally enforceable construction permit or SIP or FIP revision for all heatset-web-offset lithographic printing line(s) at a facility requires the owner or operator to limit production or capacity of these printing line(s) to reduce total VOM emissions from all heatset-web-offset lithographic printing line(s) to 90.7 Mg (100 tons) per calendar year or less in the absence of air pollution control equipment, and

(B) Any owner or operator of any heatset-web-offset lithographic printing line that is exempt from the limitations in paragraph (h)(5)(ii) of this section because of the criteria in paragraph (h)(5)(i)(A) of this section shall be subject to the recordkeeping and reporting requirements in paragraph (h)(5)(iii)(A) of this section.

(ii) *Specific provisions.* No owner or operator of a subject heatset-web-offset printing line may cause or allow the operation of the subject heatset-web-offset printing line unless the owner or operator meets the requirements in paragraph (h)(5)(ii) (A) or (B) of this section and the requirements in paragraphs (h)(5)(ii) (C) and (D) of this section.

(A) An afterburner system is installed and operated that reduces 90 percent of the VOM emissions from the dryer exhaust, or

(B) The fountain solution contains no more than 8 percent, by weight, of VOM and a condensation recovery system is installed and operated that removes at least 75 percent of the non-isopropyl alcohol organic materials from the dryer exhaust, and

(C) The control device is equipped with the applicable monitoring equipment specified in paragraph (a)(4)(iv)(B) of this section and the monitoring equipment is installed, calibrated, operated and maintained according to vendor specifications at all times the control device is in use, and

(D) The control device is operated at all times when the subject printing line is in operation. The owner or operator shall demonstrate compliance with paragraph (h)(5) of this section by using the applicable test methods and procedures specified in paragraphs (a)(4) (i), (iv), and (vi) of this section and by complying with the recordkeeping and reporting requirements specified in paragraph (h)(5)(iii) of this section.

(iii) *Recordkeeping and reporting.* The VOM content of each fountain solution and ink and the efficiency of each control device shall be determined by the applicable test methods and procedures specified in paragraph (a)(4) of this section to establish the records required under paragraph (h)(5)(iii) of this section.

(A) Any owner or operator of a printing line which is exempted from the limitations of paragraph (h)(5)(ii) of this section because of the criteria in paragraph (h)(5)(i) of this section shall comply with the following:

(*1*) By July 1, 1991, the owner or operator of a facility to which paragraph (h)(5)(iii)(A) of this section is applicable shall certify to the Administrator that the facility is exempt under the provisions of paragraph (h)(5)(i) of this section. Such certification shall include:

(*i*) A declaration that the facility is exempt from the limitations of paragraph (h)(5)(ii) of this section because of the criteria in paragraph (h)(5)(i) of this section, and

(*ii*) Calculations which demonstrate that total maximum theoretical emissions of VOM from all heatset-web-offset lithographic printing lines at the facility never exceed 90.7 Mg (100 tons) per calendar year before the application of air pollution control equipment. Total maximum theoretical emissions of VOM for a heatset-web-offset lithographic printing facility is the sum of maximum theoretical emissions of VOM from each heatset-web-offset lithographic printing line at the facility. The following equation shall be used to calculate total maximum theoretical emissions of VOM per calendar year in the absence of air pollution control equipment for each heatset-web-offset lithographic printing line at the facility.

$$E_p = (A \times B) + \frac{(C \times D)}{100}$$

where

E_p=Total maximum theoretical emissions of VOM from one heatset-web-offset printing line in units of kg/year (lbs/year),

A=Weight of VOM per volume of solids of ink with the highest VOM content as applied each year on the printing line in units of kg VOM/l (lbs VOM/gal) of solids, and

B=Total volume of solids for all inks that can potentially be applied each year on the printing line in units of l/year (gal/year). The instrument or method by which the owner or operator accurately measured or calculated the volume of each ink as applied and the amount that can potentially be applied each year on the printing line shall be described in the certification to the Administrator.

C=The weight percent VOM of the fountain solution with the highest VOM content.

D=The total volume of fountain solution that can potentially be used each year on the printing line in units of l/year (gal/year). The instrument and/or method by which the owner or operator accurately measured or calculated the volume of each fountain solution used and the amount that can potentially be used each year on the printing line shall be described in the certification to the Administrator.

(*2*) On and after July 1, 1991, the owner or operator of a facility to which paragraph (h)(5)(iii)(A) of this section is applicable shall collect and record all of the following information each year for each printing line and maintain the information at the facility for a period of three years:

(*i*) The name and identification of each fountain solution and ink as applied on each printing line.

(*ii*) The VOM content and the volume of each fountain solution and ink as applied each year on each printing line.

(*3*) On and after July 1, 1991, the owner or operator of a facility exempted from the limitations of paragraph (h)(5)(ii) of this section because of the criteria in paragraph (h)(5)(i) of this section shall notify the Administrator of any record showing that total maximum theoretical emissions of VOM from all printing lines exceed 90.7 Mg (100 tons) in any calendar year in the absence of air pollution control equipment shall be reported by sending a copy of such record to the Administrator within 30 days after the exceedance occurs.

(B) Any owner or operator of a printing line subject to the limitations of paragraph (h)(5)(ii) of this section and complying by means of paragraph (h)(5)(ii)(A) of this section shall comply with the following:

(*1*) By July 1, 1991, or upon initial start-up of a new printing line, or upon changing the method of compliance for an existing printing line from paragraph (h)(5) (ii)(B) to (ii)(A) of this section, the owner or operator of the subject printing line shall perform all tests and submit to the Administrator the results of all tests and calculations necessary to demonstrate that the subject printing line will be in compliance with paragraph (h)(5)(ii)(A) of this section on and after July 1, 1991, or on and after the initial start-up date.

(*2*) On and after July 1, 1991, or on and after the initial start-up date, the owner or operator of a printing line subject to the limitations of paragraph (h)(5)(ii) of this section and complying by means of paragraph (h)(5)(ii)(A) of this section shall collect and record the following information each day for each printing line and maintain the information at the facility for a period of three years:

(*i*) Control device monitoring data.

(*ii*) A log of operating time for the control device, monitoring equipment and the associated printing line.

(*iii*) A maintenance log for the control device and monitoring equipment detailing all routine and nonroutine maintenance performed including dates and duration of any outages.

(*3*) On and after July 1, 1991, the owner or operator of a subject printing line shall notify the Administrator in the following instances:

(*i*) Any record showing violation of paragraph (h)(5)(ii)(A) of this section shall be reported by sending a copy of such record to the Administrator within 30 days following the occurrence of the violation.

(*ii*) At least 30 calendar days before changing the method of compliance with paragraph (h)(5)(ii) of this section from paragraph (h)(5) (ii)(A) to (ii)(B), the owner or operator shall comply with all requirements of paragraph (h)(5)(iii)(C)(*1*) of this section. Upon changing the method of compliance

with paragraph (h)(5)(ii) from paragraph (h)(5) (ii)(A) to (ii)(B) of this section the owner or operator shall comply with all requirements of paragraph (h)(5)(iii)(C) of this section.

(C) Any owner or operator of a printing line subject to the limitations of paragraph (h)(5)(ii) of this section and complying by means of paragraph (h)(5)(ii)(B) of this section shall comply with the following:

(*1*) By July 1, 1991, or upon initial start-up of a new printing line, or upon changing the method of compliance for an existing printing line from paragraph (h)(5) (ii)(A) to (ii)(B) of this section, the owner or operator of the subject printing line shall perform all tests and submit to the Administrator the results of all tests and calculations necessary to demonstrate that the subject printing line will be in compliance with paragraph (h)(5)(ii)(B) of this section on and after July 1, 1991, or on and after the initial start-up date.

(*2*) On and after July 1, 1991, or on and after the initial start-up date, the owner or operator of a printing line subject to the limitations of paragraph (h)(5)(ii) of this section and complying by means of paragraph (h)(5)(ii)(B) of this section shall collect and record the following information each day for each printing line and maintain the information at the facility for a period of three years:

(*i*) The VOM content of the fountain solution used each day on each printing line.

(*ii*) A log of operating time for the control device and the associated printing line.

(*iii*) A maintenance log for the control device detailing all routine and non-routine maintenance performed including dates and duration of any outages.

(*3*) On and after July 1, 1991, the owner or operator of a subject printing line shall notify the Administrator in the following instances:

(*i*) Any record showing violation of paragraph (h)(5)(ii)(B) of this section shall be reported by sending a copy of such record to the Administrator within 30 days following the occurrence of the violation.

(*ii*) At least 30 calendar days before changing the method of compliance with paragraph (h)(5)(ii) of this section from paragraph (h)(5)(ii)(B) to (h)(5)(ii)(A) of this section, the owner or operator shall comply with all requirements of paragraph (h)(5)(iii)(B)(*1*) of this section. Upon changing the method of compliance with paragraph (h)(5)(ii) of this section from paragraph (h)(5)(ii)(B) to (h)(5)(ii)(A) of this section, the owner or operator shall comply with all requirements of paragraph (h)(5)(iii)(B) of this section.

(iv) *Compliance schedule.* Every owner or operator of a heatset-web-offset lithographic printing line shall comply with the applicable requirements of paragraphs (h)(5) (ii) and (iii) of this section in accordance with the applicable compliance schedule specified in paragraph (h)(5)(iv) (A), (B) or (C) of this section.

(A) No owner or operator of a heatset-web-offset lithographic printing line which is exempt from the limitations of paragraph (h)(5)(ii) of this section because of the criteria in paragraph (h)(5)(i) of this section shall operate said printing line on or after July 1, 1991, unless the owner or operator has complied with, and continues to comply with, paragraphs (h)(5)(iii)(A) and (h)(5)(ii)(A) of this section.

(B) No owner or operator of a heatset-web-offset lithographic printing line complying by means of paragraph (h)(5)(ii)(A) of this section shall operate said printing line on or after July 1, 1991, unless the owner or operator has complied with, and continues to comply with, paragraphs (h)(5)(iii)(B) and (h)(5)(ii)(B) of this section.

(C) No owner or operator of a heatset-web-offset lithographic printing line complying by means of paragraph (h)(5)(ii)(B) of this section shall operate said printing line on or after July 1, 1991, unless the owner or operator has complied with, and continues to comply with, paragraph (h)(5)(iii)(C) of this section.

(6) The control and recordkeeping and reporting requirements, as well as the test methods in this paragraph, apply to the rotogravure and flexographic presses at General Packaging

Products, Inc.'s (GPP) plant in Chicago, Illinois, instead of the requirements in 40 CFR 52.741(h)(1) through 40 CFR 52.741(h)(5).

(i) After July 1, 1992, no inks or other volatile organic material (VOM) containing materials shall at any time be applied or used which have a higher percent VOM by weight than the following:

(A) 8 percent VOM by weight for waterbased inks as applied on GPP's presses.

(B) 82 percent VOM by weight for solvent based inks as applied on GPP's presses.

(C) 100 percent VOM by weight for all other VOM containing materials (besides inks) as used on GPP's presses.

(ii) After July 1, 1992, the weight of ink and other VOM containing materials used shall not exceed the following:

(A) 200,000 pounds per year total for all waterbased inks, as applied (including dilution material). The yearly weight of waterbased inks used is to be calculated according to the procedure in paragraph (h)(6)(iii) of this section.

(B) 100,008 pounds per year total for all solvent based inks, as applied (including dilution material). The yearly weight of solvent based inks used is to be calculated according to the procedure in paragraph (h)(6)(iii) of this section.

(C) 100,000 pounds per year total (based upon the formulation of the material as it is used on the presses) for all other VOM containing materials (besides inks). The yearly weight of other VOM containing materials is to be calculated according to the procedure in paragraph (h)(6)(iii) of this section.

(iii) The yearly weight of ink/material used is to be calculated as follows:

(A) Compute the weight of ink/material used each month by the 15th of the following month.

(B) By the 15th of each month, add the monthly ink/material usage for the 12 previous months (to obtain the yearly weight of ink/material used).

(iv) Beginning on July 1, 1992, the owner and operator of GPP's plant in Chicago, Illinois, shall keep the following records for each month. All records shall be retained at GPP for 3 years and shall be made available to the Administrator on request:

(A) The name and identification number of each waterbased ink, each solvent based ink, and each other VOM containing material as applied or used on any press.

(B) The pounds of waterbased ink as applied on all presses for each month and the percent VOM by weight for each waterbased ink as applied on any press for each month.

(C) The pounds of solvent based ink as applied on all presses for each month and the percent VOM by weight for each solvent based ink as applied on any press for each month.

(D) The pounds of other (non-ink) VOM containing material used on all presses for each month and the percent VOM by weight for each (non-ink) VOM containing material as used on any press for each month.

(v) Any record showing a violation of paragraph (h)(6)(i) or (h)(6)(ii) of this section shall be reported by sending a copy of such record to the Administrator within 30 days of the violation.

(vi) To determine compliance with paragraphs (h)(6)(i) and (h)(6)(ii) of this section and to establish the records required under paragraph (h)(6)(iv) of this section the percent VOM by weight of each ink and other VOM containing material shall be determined by the applicable test methods and procedures specified in paragraph (a)(4) of this section.

(i) *Leaks from synthetic organic chemical and polymer manufacturing equipment*—(1) *Inspection program for leaks.* The owner or operator of a synthetic organic chemical or polymer manufacturing plant subject to paragraph (i) and subpart Q (sections 215.430, 215.431, 215.433, 215.434, 215.435, and 215.437) of Ill. Adm. Code 215 (incorporated by reference as specified in 40 CFR 52.742) shall, for the purposes of detecting leaks, conduct a component inspection program using the test methods specified in Method 21, 40 CFR part 60, appendix A, consistent with the following provisions:

(i) Test annually those components operated near extreme temperature or pressure such that they would be unsafe to routinely monitor and those components which would require the

elevation of monitoring personnel higher than two meters above permanent worker access structures or surfaces.

(ii) Test quarterly all other pressure relief valves in gas service, pumps in light liquid service, valves in light liquid service and in gas service, and compressors.

(iii) If less than or equal to 2 percent of the valves in light liquid service and in gas service tested pursuant to paragraph (i)(1)(ii) of this section are found not to leak for five consecutive quarters, no leak tests shall be required for three consecutive quarters. Thereafter, leak tests shall resume for the next quarter. If that test shows less than or equal to 2 percent of the valves in light liquid service and in gas service are leaking, then no tests are required for the next three quarters. If more than 2 percent are leaking, then tests are required for the next five quarters.

(iv) Observe visually all pump seals weekly.

(v) Test immediately any pump seal from which liquids are observed dripping.

(vi) Test any relief valve within 24 hours after it has vented to the atmosphere.

(vii) Routine instrument monitoring of valves which are not externally regulated, flanges, and equipment in heavy liquid service, is not required. However, any valve which is not externally regulated, flange or piece of equipment in heavy liquid service that is found to be leaking on the basis of sight, smell or sound shall be repaired as soon as practicable but no later than 30 days after the leak is found.

(viii) Test immediately after repair any component that was found leaking.

(ix) Within one hour of its detection, a weatherproof, readily visible tag, in bright colors such as red or yellow, bearing an identification number and the date on which the leak was detected must be affixed on the leaking component and remain in place until the leaking component is repaired.

(x) The following components are exempt from the monitoring requirements in paragraph (i)(1) of this section:

(A) Any component that is in vacuum service, and

(B) Any pressure relief valve that is connected to an operating flare header or vapor recovery device.

(2) *Alternative program for leaks.* The Administrator shall approve an alternative program of monitoring, recordkeeping, or reporting to that prescribed in paragraph (i) and subpart Q (sections 215.430, 215.431, 215.433, 215.434, 215.435, and 215.437) of Ill. Adm. Code 215 (incorporated by reference as specified in 40 CFR 52.742), upon a demonstration by the owner or operator of such plant that the alternative program will provide plant personnel and USEPA personnel with an equivalent ability to identify and repair leaking components. Any alternative program can only be allowed if approved by the Administrator as a SIP or FIP revision.

(j) *Petroleum refining and related industries: asphalt materials*—(1) *Monitoring program for leaks.* (i) The owner or operator of a petroleum refinery subject to subpart R (section 215.445) of Ill. Adm. Code 215 (incorporated by reference as specified in 40 CFR 52.742) shall, for the purpose of detecting leaks, conduct a component monitoring program consistent with the following provisions:

(A) Test once between March 1 and June 1 of each year, by methods referenced in paragraph (a)(4)(vii) of this section, all pump seals, pipeline valves in liquid service and process drains.

(B) Test once each quarter of each calendar year, by methods referenced in paragraph (a)(4)(vii) of this section, all pressure relief valves in gaseous service, pipeline valves in gaseous service and compressor seals.

(C) Inaccessible valves may be tested once each calendar year instead of once each quarter of each calendar year.

(D) Observe visually all pump seals weekly.

(E) Test immediately any pump seal from which liquids are observed dripping,

(F) Test any relief valve within 24 hours after it has vented to the atmosphere, and

(G) Test immediately after repair any component that was found leaking.

(ii) Storage tank valves and pressure relief devices connected to an operating flare header or vapor recovery device are exempt from the monitoring

requirements in paragraph (j)(1)(i) of this section.

(iii) The Administrator may require more frequent monitoring than would otherwise be required by paragraph (j)(1)(i) of this section for components which are demonstrated to have a history of leaking.

(2) *Alternative program for leaks.* The Administrator may approve an alternative program of monitoring, recordkeeping or reporting to that prescribed in paragraph (j)(1) of this section and subpart R (sections 215.446, 215.448, and 215.449) of Ill. Adm. Code 215 (incorporated by reference as specified in 40 CFR 52.742), upon a demonstration by the owner or operator of a petroleum refinery that the alternative program will provide refinery and USEPA personnel with an equivalent ability to identify and repair leaking components. Any alternative program can only be allowed if approved by the Administrator as a SIP or FIP revision.

(3) *Compliance schedule for leaks.* The owner or operator of a petroleum refinery shall adhere to the increments of progress contained in the following schedule:

(i) Submit to the Administrator a monitoring program consistent with subpart R (section 215.446) of Ill. Adm. Code 215 (incorporated by reference as specified in 40 CFR 52.742) prior to September 1, 1990.

(ii) Submit to the Administrator the first monitoring report pursuant to subpart R (section 215.449) of Ill. Adm. Code 215 (incorporated by reference as specified in 40 CFR 52.742) prior to October 1, 1990.

(k)–(l) [Reserved]

(m) *Pharmaceutical manufacturing*—(1) *Applicability.* (i) The rules of paragraph (m) of this section, except for paragraphs (m)(4) through (m)(6) of this section, apply to all emission sources of VOM, including but not limited to reactors, distillation units, dryers, storage tanks for VOL, equipment for the transfer of VOL, filters, crystallizers, washers, laboratory hoods, pharmaceutical coating operations, mixing operations and centrifuges used in manufacturing, including packaging, of pharmaceuticals, and emitting more than 6.8 kg/day (15 lbs/day) and more than 2,268 kg/year (2.5 tons/year) of VOM. If an emission source emits less than 2,268 kg/year (2.5 tons/year) of VOM, the requirements of this paragraph still apply to the emission source if VOM emissions from the emission source exceed 45.4 kg/day (100 lbs/day).

(ii) Notwithstanding paragraph (m)(1)(i) of this section, the air suspension coater/dryer, fluid bed dryers, tunnel dryers, and Accelacotas located in Libertyville Township, Lake County, Illinois shall be exempt from the rules of paragraph (m) of this section, except for paragraphs (m)(4) through (m)(6) of this section, if emissions of VOM not vented to air pollution control equipment do not exceed the following levels:

(A) For the air suspension coater/dryer: 2,268 kg/year (2.5 tons/year);

(B) For each fluid bed dryer: 4,535 kg/year (5.0 tons/year);

(C) For each tunnel dryer: 6,803 kg/year (7.5 tons/year); and

(D) For each Accelacota: 6,803 kg/year (7.5 tons/year).

(iii) Paragraphs (m)(4) through (m)(6) of this section apply to a plant having one or more emission sources that:

(A) Are used to manufacture pharmaceuticals, and

(B) Emit more than 6.8 kg/day (15 lbs/day) of VOM and more than 2,268 kg/year (2.5 tons/year) of VOM, or, if less than 2,268 kg/year (2.5 tons/year), these paragraphs still apply if emissions from one or more sources exceed 45.4 kg/day (100 lbs/day).

(iv) No owner or operator shall violate any condition in a permit when the condition results in exclusion of an emission source from paragraph (m) of this section.

(v) Any pharmaceutical manufacturing source that becomes subject to the provisions of paragraph (m) of this section at any time shall remain subject to the provisions of paragraph (m) of this section at all times.

(vi) Emissions subject to paragraph (m) of this section shall be controlled at all times consistent with the requirements set forth in paragraph (m) of this section.

(vii) Control devices required pursuant to paragraph (m) of this section shall be operated at all times when the source it is controlling is operated.

(viii) Determinations of daily and annual emissions for purposes of paragraph (m)(1) of this section shall be made using both data on the hourly emission rate (or the emissions per unit of throughput) and appropriate daily and annual data from records of emission source operation (or material throughput or material consumption data). In the absence of representative test data pursuant to paragraph (m)(8) of this section for the hourly emission rate (or the emissions per unit of throughput), such items shall be calculated using engineering calculations, including the methods described in appendix B of ''Control of Volatile Organic Emissions from Manufacturing of Synthesized Pharmaceutical Products'' (EPA–450/2–78–029). (This subparagraph shall not affect the Administrator's authority to require emission tests to be performed pursuant to paragraph (m)(8) of this section.)

(2) *Control of reactors, distillation units, crystallizers, centrifuges and vacuum dryers.* (i) The owner or operator shall equip all reactors, distillation units, crystallizers, centrifuges and vacuum dryers that are used to manufacture pharmaceuticals with surface condensers or other air pollution control equipment listed in paragraph (m)(2)(i)(B) of this section.

(A) If a surface condenser is used, it shall be operated such that the condenser outlet gas temperature does not exceed:

(*1*) 248.2 K (−13 °F) when condensing VOM of vapor pressure greater than 40.0kPa (5.8 psi) at 294.3K (70 °F), or

(*2*) 258.2 K (5 °F) when condensing VOM of vapor pressure greater than 20.0 kPa (2.9 psi) at 294.3 K (70 °F), or

(*3*) 273.2 K (32 °F) when condensing VOM of vapor pressure greater than 10.0 kPa (1.5 psi) at 294.3 K (70 °F), or

(*4*) 283.2 K (50 °F) when condensing VOM of vapor pressure greater than 7.0 kPa (1.0 psi) at 294.3 K (70 °F), or

(*5*) 298.2 K (77 °F) when condensing VOM of vapor pressure greater than 3.45 kPa (0.5 psi) at 294.3 K (70 °F).

(B) If a scrubber, carbon adsorption, thermal afterburner, catalytic afterburner, or other air pollution control equipment other than a surface condenser is used, such equipment shall provide a reduction in the emissions of VOM of 90 percent or more.

(ii) The owner or operator shall enclose all centrifuges used to manufacture pharmaceuticals and that have an exposed VOL surface, where the VOM in the VOL has a vapor pressure of 3.45 kPa (0.5 psi) or more at 294.3 K (70 °F), except as production, sampling, maintenance, or inspection procedures require operator access.

(3) *Control of air dryers, production equipment exhaust systems and filters.* (i) The owner or operator of an air dryer or production equipment exhaust system used to manufacture pharmaceuticals shall control the emissions of VOM from such emission sources by air pollution control equipment which reduces by 90 percent or more the VOM that would otherwise be emitted into the atmosphere.

(ii) The owner or operator shall enclose all rotary vacuum filters and other filters used to manufacture pharmaceuticals and that have an exposed VOL surface, where the VOM in the VOL has a vapor pressure of 3.45 kPa (0.5 psi) or more at 294 K (70 °F), except as production, sampling, maintenance, or inspection procedures require operator access.

(4) *Material storage and transfer.* The owner or operator of a pharmaceutical manufacturing plant shall:

(i) Provide a vapor balance system that is at least 90 percent effective in reducing VOM emissions from truck or railcar deliveries to storage tanks with capacities equal to or greater than 7.57 m^3 (2,000 gal) that store VOL with vapor pressures greater than 28.0 kPa (4.1 psi) at 294.3 K (70 °F), and

(ii) Install, operate, and maintain pressure/vacuum conservation vents set at 0.2 kPa (0.03 psi) or greater on all storage tanks that store VOL with vapor pressures greater than 10 kPa (1.5 psi) at 294.3 K (70 °F).

(5) *In-process tanks.* The owner or operator shall install covers on all in-process tanks used to manufacture pharmaceuticals and containing a VOL at any time. These covers must remain closed, except as production, sampling, maintenance or inspection procedures require operator access.

(6) *Leaks.* The owner or operator of a pharmaceutical manufacturing plant shall repair any component from which

a leak of VOL can be observed. The repair shall be completed as soon as practicable but no later than 15 days after the leak is found. If the leaking component cannot be repaired until the process unit is shut down, the leaking component must then be repaired before the unit is restarted.

(7) *Other emission sources.* The owner or operator of a washer, laboratory hood, tablet coating operation, mixing operation or any other process emission source not subject to paragraphs (m)(2) through (m)(6) of this section, and used to manufacture pharmaceuticals shall control the emissions of VOM from such emission sources by:

(i) Air pollution control equipment which reduces by 81 percent or more the VOM that would otherwise be emitted to the atmosphere, or

(ii) A surface condenser which captures all the VOM which would otherwise be emitted to the atmosphere and which meets the requirements of paragraph (m)(2)(i) of this section.

(8) *Testing.* (i) Upon request by the Administrator, the owner or operator of any VOM emission source subject to paragraph (m) or exempt from paragraph (m) of this section by virtue of the provisions of paragraph (m)(1) of this section shall, at his own expense, demonstrate compliance to the Administrator by the methods or procedures listed in paragraph (a)(vi)(A) of this section.

(ii) A person planning to conduct a VOM emissions test to demonstrate compliance with paragraph (m) of this section shall notify the Administrator of that intent not less than 30 calendar days before the planned initiation of the test.

(9) *Monitoring and recordkeeping for air pollution control equipment*—(i) *Monitoring.* (A) At a minimum, continuous monitors for the following parameters shall be installed on air pollution control equipment used to control sources subject to paragraph (m) of this section:

(*1*) Destruction device combustion temperature.

(*2*) Temperature rise across a catalytic afterburner bed.

(*3*) VOM concentration on a carbon absorption unit to determine breakthrough.

(*4*) Outlet gas temperature of a refrigerated condenser.

(*5*) Temperature of a non-refrigerated condenser coolant supply system.

(B) Each monitor shall be equipped with a recording device.

(C) Each monitor shall be calibrated quarterly.

(D) Each monitor shall operate at all times while the associated control equipment is operating.

(ii) *Recordkeeping.* (A) The owner or operator of a pharmaceutical manufacturing facility shall maintain the following records:

(*1*) Parameters listed in paragraph (m)(9)(i)(A) of this section shall be recorded.

(*2*) For sources subject to paragraph (m)(2) of this section, the vapor pressure of VOM being controlled shall be recorded for every process.

(B) For any leak subject to paragraph (m)(6) of this section which cannot be readily repaired within one hour after detection, the following records shall be kept:

(*1*) The name of the leaking equipment,

(*2*) The date and time the leak is detected,

(*3*) The action taken to repair the leak, and

(*4*) The data and time the leak is repaired.

(C) The following records shall be kept for emission sources subject to paragraph (m)(5) of this section which contain VOL:

(*1*) For maintenance and inspection:

(*i*) The date and time each cover is opened,

(*ii*) The length of time the cover remains open, and

(*iii*) The reason why the cover is opened.

(*2*) For production and sampling, detailed written procedures or manufacturing directions specifying the circumstances under which covers may be opened and the procedures for opening covers.

(D) For each emission source used in the manufacture of pharmaceuticals for which the owner or operator of a pharmaceutical manufacturing plant claims emission standards are not applicable, because the emissions are

below the applicability cutoffs in paragraph (m)(1)(i) of this section or paragraph (m)(1)(ii) of this section the owner or operator shall:

(*1*) Maintain a demonstration including detailed engineering calculations of the maximum daily and annual emissions for each such emission source showing that the emissions are below the applicability cutoffs in paragraph (m)(1)(i) or paragraph (m)(1)(ii) of this section, as appropriate, for the current and prior calendar years;

(*2*) Maintain appropriate operating records for each such emission source to identify whether the applicability cutoffs in paragraph (m)(1)(i) or paragraph (m)(1)(ii) of this section, as appropriate, are ever exceeded; and

(*3*) Provide written notification to the Administrator within 30 days of a determination that such an emission source has exceeded the applicability cutoffs in paragraph (m)(1)(i) or paragraph (m)(1)(ii) of this section, as appropriate.

(E) Records required under paragraph (m)(9)(ii)(A) of this section shall be maintained by the owner or operator for a minimum of two years after the date on which they are made.

(F) Copies of the records shall be made available to the Administrator upon verbal or written request.

(n)—(p) [Reserved]

(q) *Gasoline distribution—(*1) *Bulk gasoline plants.* (i) Subject to paragraph (q)(1)(v) of this section, no person may cause or allow the transfer of gasoline from a delivery vessel into a stationary storage tank located at a bulk gasoline unless:

(A) The delivery vessel and the stationary storage tank are each equipped with a vapor collection system that meets the requirements of paragraph (q)(1)(iv)(D) of this section,

(B) Each vapor collection system is operating,

(C) The delivery vessel displays the appropriate sticker pursuant to the requirements of sections 215.584 (b) or (d) of 35 I11. Adm. Code 215 (incorporated by reference as specified in 40 CFR 52.742),

(D) The pressure relief valve(s) on the stationary storage tank and the delivery vessel are set to release at no less than 0.7 psi or the highest pressure allowed by state or local fire codes or the guidelines of the National Fire Prevention Association, and

(E) The stationary storage tank is equipped with a submerged loading pipe.

(ii) Subject to paragraph (q)(1)(vi) of this section, no person may cause or allow the transfer of gasoline from a stationary storage tank located at a bulk gasoline plant into a delivery vessel unless:

(A) The requirements set forth in paragraphs (q) (1)(i)(A) through (1)(i)(D) of this section are met, and

(B) Equipment is available at the bulk gasoline plant to provide for the submerged filling of the delivery vessel or the delivery vessel is equipped for bottom loading.

(iii) Subject to paragraph (q)(1)(v) of this section, each owner of a stationary storage tank located at a bulk gasoline plant shall:

(A) Equip each stationary storage tank with a vapor control system that meets the requirements of paragraph (q) (1)(i) or (1)(ii) of this section, whichever is applicable,

(B) Provide instructions to the operator of the bulk gasoline plant describing necessary maintenance operations and procedures for prompt notification of the owner in case of any malfunction of a vapor control system, or

(C) Repair, replace or modify any worn out or malfunctioning component or element of design.

(iv) Subject to paragraph (q)(1)(v) of this section, each operator of a bulk gasoline plant shall:

(A) Maintain and operate each vapor control system in accordance with the owner's instructions,

(B) Promptly notify the owner of any scheduled maintenance or malfunction requiring replacement or repair of a major component of a vapor control system,

(C) Maintain gauges, meters or other specified testing devices in proper working order, and

(D) Operate the bulk plant vapor collection system and gasoline loading equipment in a manner that prevents:

(*1*) Gauge pressure from exceeding 45.7 cm (18 in.) of water and vacuum from exceeding 15.2 cm (6 in.) of water,

as measured as close as possible to the vapor hose connection,

(*2*) A reading equal to or greater than 100 percent of the lower explosive limit (LEL measured as propane) when tested in accordance with the procedure described in ''Control of Volatile Organic Compound Leaks from Gasoline Tank Trucks and Vapor Collection Systems'', Appendix B, EPA 450/2–78–051 (which is available for purchase from the National Technical Information Services, 5285 Port Royal Road, Springfield, VA 22161), and

(*3*) Avoidable leaks of liquid during loading or unloading operations.

(E) Provide a pressure tap or equivalent on the bulk plant vapor collection system in order to allow the determination of compliance with paragraph (q)(1)(iv)(D)(*1*) of this section, and

(F) Within 15 business days after discovery of any leak by the owner, operator, or the Administrator, repair and retest a vapor collection system which exceeds the limits of paragraph (q)(1)(iv)(D) (*1*) or (*2*) of this section.

(v) The requirements of paragraphs (q) (1)(i), (1)(iii) and (1)(iv) of this section, shall not apply to:

(A) Any stationary storage tank with a capacity of less than 2,177 l (575 gal), or

(B) Any bulk gasoline plant whose daily gasoline throughtput is less than 15,140 l (4,000 gal/day) on a thirty-day rolling average.

(vi) The requirements of paragraph (q)(1)(ii) of this section shall only apply to bulk gasoline plants:

(A) Whose daily gasoline throughput is greater than or equal to 15,140 l (4,000 gal/day) on a thirty-day rolling average, and

(B) That either distribute gasoline to gasoline dispensing facilities subject to the requirements of section 215.583(a)(2) of 35 Ill. Adm. Code 215 (incorporated by reference as specified in 40 CFR 52.742) or that are in Cook, DuPage, Kane, Lake, McHenry or Will County.

(vii) Any bulk gasoline plant which is ever subject to paragraph (q)(1) (i), (ii), (iii) or (iv) of this section shall always be subject to these paragraphs.

(2) [Reserved]

(r) [Reserved]

(s) *Paint and ink manufacturing*—(1) *Applicability*. (i) Paragraph (s) shall apply to all paint and ink manufacturing plants which:

(A) Include process emission sources not subject to subparts (B), (Q) (excluding sections 215.432 and 215.436), (R) (excluding sections 215.447, 215.450, and 215.452), (S), (V), (X), (Y) (sections 215.582, 215.583, and 215.584), or (Z) of 35 Ill. Adm. Code 215 (incorporated by reference as specified in 40 CFR 52.742), or to paragraphs (d), (e) (excluding paragraph (e)(1)(i)(L)), (h) (excluding paragraph (h)(5)), (i), (j), or (q)(1) of this section; and which as a group both:

(*1*) Have maximum theoretical emissions of 91 Mg (100 tons) or more per calendar year of VOM if no air pollution control equipment were used, and

(*2*) Are not limited to less than 91 Mg (100 tons) of VOM emissions per calendar year in the absence of air pollution control equipment, through production or capacity limitations contained in a federally enforceable construction permit or a SIP or FIP revision, or

(B) Produce more than 7,570,820 l (2,000,000 gal) per calendar year of paint or ink formulations, which contain less than 10 percent (by weight) water, and ink formulations not containing as the primary solvents water, Magie oil or glycol.

(ii) For the purposes of paragraph (s) of this section, uncontrolled VOM emissions are the emissions of VOM which would result if no air pollution control equipment were used.

(2) *Exemption for waterbase material and heatset-offset ink*. The requirements of paragraphs (s)(4) and (s)(5) of this section and paragraph (s)(7)(i) of this section shall not apply to equipment while it is being used to produce either:

(i) Paint or ink formulations which contain 10 percent or more (by weight) water, or

(ii) Inks containing Magie oil and glycol as the primary solvent.

(3) *Permit conditions*. No person shall violate any condition in a federally enforceable permit when the condition results in exclusion of the plant or an emission source from paragraph (s).

(4) *Open-top mills, tanks, vats or vessels*. No person shall operate an open-top mill, tank, vat or vessel with a volume of more than 45 l (12 gal) for the production of paint or ink unless:

(i) The mill, tank, vat or vessel is equipped with a cover which completely covers the mill, tank, vat or vessel opening except for an opening no larger than necessary to allow for safe clearance for a mixer shaft. Such cover shall extend at least 1.27 cm (0.5 in.) beyond the outer rim of the opening or be attached to the rim.

(ii) The cover remains closed except when production, sampling, maintenance or inspection procedures require access.

(iii) The cover is maintained in good condition such that, when in place, it maintains contact with the rim of the opening for at least 90 percent of the circumference of the rim.

(5) *Grinding mills.* (i) No person shall operate a grinding mill for the production of paint or ink which is not maintained in accordance with the manufacturer's specifications.

(ii) No person shall operate a grinding mill fabricated or modified after the effective date of paragraph (s) which is not equipped with fully enclosed screens.

(iii) The manufacturer's specifications shall be kept on file at the plant by the owner or operator of the grinding mill and be made available to any person upon verbal or written request during business hours.

(6) *Storage tanks.* (i) The owner or operator shall equip tanks storing VOL with a vapor pressure greater than 10 kPa (1.5 psi) at 20 °C (68 °F) with pressure/vacuum conservation vents set as a minimum at +/–0.2 kPa (0.029 psi). These controls shall be operated at all times. An alternative air pollution control system may be used if it results in a greater emission reduction than these controls. Any alternative control system can only be allowed if approved by the Administrator as a SIP or FIP revision.

(ii) Stationary VOL storage containers with a capacity greater than 946 l (250 gal) shall be equipped with a submerged-fill pipe or bottom fill. These controls shall be operated at all times. An alternative control system can only be allowed if approved by the Administrator as a SIP or FIP revision.

(7) *Leaks.* The owner or operator of a paint or ink manufacturing plant shall, for the purpose of detecting leaks, conduct an equipment monitoring program as set forth below:

(i) Each pump shall be checked by visual inspection each calendar week for indications of leaks, that is, liquids dripping from the pump seal. If there are indications of liquids dripping from the pump seal, the pump shall be repaired as soon as practicable, but no later than 15 calendar days after the leak is detected.

(ii) Any pump, valve, pressure relief valve, sampling connection, open-ended valve and flange or connector containing a fluid which is at least 10 percent VOM by weight which appears to be leaking on the basis of sight, smell or sound shall be repaired as soon as practicable, but no later than 15 calendar days after the leak is detected.

(iii) A weather proof, readily visible tag, in bright colors such as red or yellow, bearing an identification number and the date on which the leak was detected shall be attached to leaking equipment. The tag may be removed upon repair, that is, when the equipment is adjusted or otherwise altered to allow operation without leaking.

(iv) When a leak is detected, the owner or operator shall record the date of detection and repair and the record shall be retained at the plant for at least two years from the date of each detection or each repair attempt. The record shall be made available to any person upon verbal or written request during business hours.

(8) *Clean up.* (i) No person shall clean paint or ink manufacturing equipment with organic solvent unless the equipment being cleaned is completely covered or enclosed except for an opening no larger than necessary to allow safe clearance for proper operation of the cleaning equipment, considering the method and materials being used.

(ii) No person shall store organic wash solvent in other than closed containers, unless closed containers are demonstrated to be a safety hazard, or dispose of organic wash solvent in a manner such that more than 20 percent by weight is allowed to evaporate into the atmosphere.

(9) *Compliance schedule.* Every owner or operator of an emission source subject to the control requirements of

paragraph (s) of this section shall comply with the requirements of paragraph (s) of this section on and after July 1, 1991.

(10) *Recordkeeping and reporting.* (i) Upon request by the Administrator, the owner or operator of an emission source which claims to be exempt from the requirements of paragraph (s) of this section shall submit records to the Administrator within 30 calendar days from the date of the request which document that the emission source is in fact exempt from paragraph (s) of this section. These records shall include (but are not limited to) the percent water (by weight) in the paint or ink being produced and the quantity of Magie oil, glycol and other solvents in the ink being produced.

(ii) Every owner or operator of an emission source which is subject to the requirements of paragraph (s) of this section shall maintain all records necessary to demonstrate compliance with those requirements at the facility for three years.

(t) [Reserved]

(u) *Miscellaneous fabricated product manufacturing processes*—(1) *Applicability.*

(i) The requirements of paragraph (u) of this section shall apply to a plant's miscellaneous fabricated product manufacturing process emission sources which are not included within any of the source categories specified in subparts (B), (Q) (excluding sections 215.432 and 215.436), (R) (excluding sections 215.447, 215.450, and 215.452), (S), (V), (X), (Y) (sections 215.582, 215.583, and 215.584), or (Z) of 35 Ill. Adm. Code 215 (incorporated by reference as specified in 40 CFR 52.742), or specified in paragraph (d), (e), (h), (i), (j), or (q)(1) of this section; if the plant is subject to paragraph (u) of this section. A plant is subject to paragraph (u) of this section if it contains process emission sources, not regulated by subparts (B), (Q) (excluding sections 215.432 and 215.436), (R) (excluding sections 215.447, 215.450, and 215.452), (S), (V), (X), (Y) (sections 215.582, 215.583, 215.584), or (Z) of 35 Ill. Adm. Code 215 (incorporated by reference as specified in 40 CFR 52.742), or by paragraph (d), (e) (excluding paragraph (e)(1)(i)(L)), (h) (excluding paragraph (h)(5)), (i), (j), or (q)(1) of this section; which as a group both:

(A) Have maximum theoretical emissions of 91 Mg (100 tons) or more per calendar year of VOM if no air pollution control equipment were used, and

(B) Are not limited to less than 91 Mg (100 tons) of VOM emissions per calendar year in the absence of air pollution control equipment, through production or capacity limitations contained in a federally enforceable construction permit or a SIP or FIP revision.

(ii) If a plant ceases to fulfill the criteria of paragraph (u)(1)(i) of this section, the requirements of paragraph (u) of this section shall continue to apply to a miscellaneous fabricated products manufacturing process emission source which was ever subject to the control requirements of paragraph (u)(3) of this section.

(iii) No limits under paragraph (u) of this section shall apply to emission sources with emissions of VOM to the atmosphere less than or equal to 0.91 Mg (1.0 ton) per calendar year if the total emissions from such sources not complying with paragraph (u)(3) of this section does not exceed 4.5 Mg (5.0 tons) per calendar year.

(iv) For the purposes of paragraph (u) of this section, an emission source shall be considered regulated by a subpart (of the Illinois rules) or paragraph if it is subject to the limits of that subpart (of the Illinois rules) or paragraph. An emission source is not considered regulated by a subpart (of the Illinois rules) or paragraph if its emissions are below the applicability cutoff level or if the source is covered by an exemption.

(v) For the purposes of paragraph (u) of this section, uncontrolled VOM emissions are the emissions of VOM which would result if no air pollution control equipment were used.

(2) *Permit conditions.* No person shall violate any condition in a permit when the condition results in exclusion of the plant or an emission source from paragraph (u) of this section.

(3) *Control requirements.* Every owner or operator of an emission source subject to paragraph (u) of this section shall comply with the requirements of

paragraph (u)(3) (i), (ii) or (iii) of this section:

(i) Emission capture and control techniques which achieve an overall reduction in uncontrolled VOM emissions of at least 81 percent, or

(ii) For coating lines, the daily-weighted average VOM content shall not exceed 0.42 kg VOM/l (3.5 lbs VOM/gal) of coating as applied (minus water and any compounds which are specifically exempted from the definition of VOM) during any day. Owners and Code 215 (incorporated by reference as specified in 40 CFR 52.742), or

(iii) An alternative control plan which has been approved by the Administrator as a SIP or FIP revision.

(4) *Compliance schedule.* Every owner or operator of an emission source subject to the control requirements of paragraph (u) of this section shall comply with the requirements of paragraph (u) of this section on and after July 1, 1991.

(5) *Testing.* Any owner or operator of a VOM emission source which is subject to paragraph (u) of this section shall demonstrate compliance with paragraph (u)(3) of this section by using the applicable test methods and procedures specified in paragraph (a)(4) of this section.

(6) The control requirements in this paragraph apply to the adhesive globe coating operations at Replogle's Broadview facility in Cook County, Illinois, instead of the control requirements in paragraph (u)(3) of this section.

(i) After October 6, 1991, no coatings shall at any time be applied which exceed the following emission limitations for the specified coating.

(A) 7.0 lbs VOM per gallon of adhesive coating (minus water and any compounds which are specifically exempted from the definition of VOM) as applied to coat globes. Such coating consists of #7879446 Methylene Chloride (RGI #01004100). The Administrator shall be notified at least ten (10) days prior to the use of any replacement adhesive for coating globes.

(B) [Reserved]

(ii) After October 6, 1991, the volume of coatings used shall not exceed the following:

(A) 572 gallons per year total for all coatings specified in paragraph (u)(6)(i)(A) of this section. The yearly volume of coatings used are to be calculated as follows:

(*1*) Compute the volume of specified coating used each month by the 15th of the following month.

(*2*) By the 15th of each month, add the monthly coating use for the 12 previous months (to obtain the yearly volume of coatings used).

(B) [Reserved]

(iii) Beginning on October 6, 1991, the owner and operator of the Replogle Globes, Inc. plant in Broadview, Illinois shall keep the following records for each month. All records shall be retained at Replogle Globes, Inc. for three (3) years and shall be made available to the Administrator on request:

(A) The name and identification number of each coating as applied on any adhesive globe coating line.

(B) The weight of VOM per volume and the volume of each coating (minus water and any compounds which are specifically exempted from the definition of VOM) as applied each month on any adhesive globe coating line.

(7) The control requirements in this paragraph apply to the glass candle container coating line(s) and silk screening machines at the Candle Corporation of America (CCA), Chicago, Illinois facility, instead of the control requirements in paragraph (u)(3) of this section.

(i) After June 1, 1992, no coatings or inks shall at any time be applied, at any coating or ink applicator, which exceed the following emission limitations for the specified coating or ink.

(A) 6.04 pounds (lbs) volatile organic material (VOM) per gallon of clear lacquer/varnish (minus water and any compounds which are specifically exempted from the definition of VOM) as applied to coat glass candle containers. Such clear lacquer/varnish (multicolor) is identified as LP3500. The Administrator must be notified at least 10 days prior to the use of any replacement clear lacquers/varnishes.

(B) 5.23 lbs VOM per gallon of translucent coating (minus water and any compounds which are specifically exempted from the definition of VOM) as applied to coat glass candle containers.

Such translucent coating (multi-color) is identified as LP3603. The Administrator must be notified at least 10 days prior to the use of any replacement translucent coatings.

(C) 5.84 lbs VOM per gallon of white lacquer (minus water and any compounds which are specifically exempted from the definition of VOM) as applied to coat glass candle containers. Such white lacquer is identified as LP3507. The Administrator must be notified at least 10 days prior to the use of any replacement white lacquers.

(D) 3.40 lbs VOM per gallon of fast dry enamel silk screen printing ink (minus water and any compounds which are specifically exempted from the definition of VOM) as applied to print onto glass candle containers.

(ii) After June 1, 1992, the volume of coating and ink used shall not exceed the following:

(A) 2,164 gallons per month total for all coatings specified in paragraph (u)(7)(i)(A) of this section.

(B) 369 gallons per month total for all coatings specified in paragraph (u)(7)(i)(B) of this section.

(C) 49 gallons per month total for all coatings specified in paragraph (u)(7)(i)(C) of this section.

(D) 50 gallons per month total for all inks specified in paragraph (u)(7)(i)(D) of this Section.

(iii) Beginning on June 1, 1992, the owner and operator of CCA's plant in Chicago, Illinois, shall keep the following records for each month. All records shall be retained at CCA for 3 years and shall be made available to the Administrator on request.

(A) The name and identification number of each coating and ink as applied on any glass candle container coating line or silk screening machine.

(B) The weight of VOM per volume and the volume of each coating and ink (minus water and any compounds which are specifically exempted from the definition of VOM) as applied each month on any glass candle container coating line or silk screening machine.

(iv) After June 1, 1992, no more than 100 gallons per month of cleaning solvent is allowed to be used on the glass candle container coating line(s) at CCA. The only cleaning solvents allowed for use are acetone (identified as LP3525) and methyl ethyl ketone (identified as LP3520). Beginning on June 1, 1992, CCA shall keep monthly records of the type and volume of all cleaning solvents used. All such records shall be retained at CCA for 3 years and shall be made available to the Administrator on request.

(v) After June 1, 1992, no more than 50 gallons per month of cleaning solvent is allowed to be used on the glass candle container silk screening machines at CCA. The only cleaning solvent allowed for use is petroleum naphtha (identified as light aromatic naphtha with 7.28 lbs VOM per gallon, minus water and any compounds which are specifically exempted from the definition of VOM). Beginning on June 1, 1992, CCA shall keep monthly records of the type and volume and the weight of VOM per volume (minus water and any compounds which are specifically exempted from the definition of VOM) of all cleaning solvents used on the glass candle container silk screening machines. All such records shall be retained at CCA for 3 years and shall be made available to the Administrator on request.

(8) The control, recordkeeping and reporting requirements in this paragraph apply to the cellulose food casing manufacturing operations at the Viskase Corporation plant in Bedford Park, Illinois (Cook County) instead of the requirements in paragraph (v) of this section, the other parts of paragraph (u) of this section, and the recordkeeping requirements in paragraph (y) of this section. Unless otherwise stated, the following requirements must be met by Viskase on and after November 21, 1995.

(i) VOM emissions shall never exceed 3.30 tons per day.

(ii) VOM emissions shall not exceed 2.22 tons per day, on a monthly average, during June, July, and August.

(iii) VOM emissions shall not exceed 2.44 tons per day during June, July, and August.

(iv) Compliance with the emission limits in paragraphs (u)(8) (i) through (iii) of this section, and the records in paragraph (u)(8)(v) of this section, shall be determined using an emission factor of ''0.72 pounds of VOM emissions per pound of carbon disulfide consumed.''

(v) Viskase must keep the following daily records:

(A) The pounds of carbon disulfide per charge for its Fibrous process. If charges with different levels of carbon disulfide per charge are used the same day, a separate record must be kept for each level of carbon disulfide per charge.

(B) The pounds of carbon disulfide per charge for its NOJAX process. If charges with different levels of carbon disulfide per charge are used the same day, a separate record must be kept for each level of carbon disulfide per charge.

(C) The number of charges per day, for each level of carbon disulfide per charge, used in Viskase's Fibrous process.

(D) The number of charges per day, for each level of carbon disulfide per charge, used in Viskase's NOJAX process.

(E) The total quantity of carbon disulfide used per day in Viskase's Fibrous process, the total quantity of carbon disulfide used per day in Viskase's NOJAX process, and the daily VOM emissions resulting from use of the carbon disulfide.

(F) The monthly use of carbon disulfide, and the monthly VOM emissions resulting from use of the carbon disulfide, during June, July, and August.

(vi) Any violation of the emission limits in paragraphs (u)(8) (i) through (iii) of this section must be reported to USEPA within 30 days of its occurrence.

(vii) In order to determine daily and monthly VOM emissions, the test methods in paragraph (a)(4) of this section may be used in addition to, and take precedence over, the emission factor cited in paragraph (u)(8)(iv) of this section. Method 15 is to be used instead of Methods 18, 25, and 25A when the test methods in paragraph (a)(4) of this section are used to determine VOM emissions from Viskase's cellulose food casing facility.

(v) *Miscellaneous formulation manufacturing processes*—(1) *Applicability*. (i) The requirements of paragraph (v) of this section shall apply to a plant's miscellaneous formulation manufacturing process emission sources, which are not included within any of the source categories specified in subpart (B), (Q) (excluding sections 215.432 and 215.436), (R) (excluding sections 215.447, 215.450, and 215.452),(S), (V), (X), (Y) (sections 215.582, 215.583, and 215.584), or (Z) of 35 Ill. Adm. Code 215 (incorporated by reference as specified in 40 CFR 52.742), or specified in paragraph (d), (e), (h), (i), (j), or (q)(1) of this section; if the plant is subject to paragraph (v) of this section. A plant is subject to paragraph (v) of this section if it contains process emission sources, not regulated by subpart (B), (Q) (excluding sections 215.432 and 215.436), (R) (excluding sections 215.447, 215.450, and 215.452), (S), (V), (X), (Y) (sections 215.582, 215.583, and 215.584), or (Z) of 35 Ill. Adm. Code 215 (incorporated by reference as specified in 40 CFR 52.742), or by paragraph (d), (e) (excluding paragraph (e)(1)(i)(L)), (h) (excluding paragraph (h)(5)), (i), (j), or (q)(1) of this section; which as a group both:

(A) Have maximum theoretical emissions of 91 Mg (100 tons) or more per calendar year of VOM if no air pollution control equipment were used, and

(B) Are not limited to less than 91 Mg (100 tons) of VOM emissions per calendar year in the absence of air pollution control equipment, through production or capacity limitations contained in a federally enforceable construction permit or a SIP or FIP revision.

(ii) If a plant ceases to fulfill the criteria of paragraph (v)(1)(i) of this section, the requirements of paragraph (v) of this section shall continue to apply to a miscellaneous formulation manufacturing process emission source which was ever subject to the control requirements of paragraph (v)(3) of this section.

(iii) No limits under paragraph (v) of this section shall apply to emission sources with emissions of VOM to the atmosphere less than or equal to 2.3 Mg (2.5 tons) per calendar year if the total emissions from such sources not complying with paragraph (v)(3) of this section does not exceed 4.5 Mg (5.0 tons) per calendar year.

(iv) For the purposes of paragraph (v) of this section, an emission source shall be considered regulated by a subpart (of the Illinois rules) or paragraph

if it is subject to the limits of that subpart (of the Illinois rules) or paragraph. An emission source is not considered regulated by a subpart (of the Illinois rules) or paragraph if its emissions are below the applicability cutoff level or if the source is covered by an exemption.

(v) For the purposes of paragraph (v) of this section uncontrolled VOM emissions are the emissions of VOM which would result if no air pollution control equipment were used.

(2) *Permit conditions.* No person shall violate any condition in a permit when the condition results in exclusion of the plant or an emission source from paragraph (v) of this section.

(3) *Control requirements.* Every owner or operator of an emission source subject to paragraph (v) of this section shall comply with the requirements of paragraph (v)(3) (i) or (ii) of this section.

(i) Emission capture and control techniques which achieve an overall reduction in uncontrolled VOM emissions of at least 81 percent, or

(ii) An alternative control plan which has been approved by the Administrator as a SIP or FIP revision.

(4) *Compliance schedule.* Every owner or operator of an emission source subject to the control requirements of paragraph (v) of this section shall comply with the requirements of paragraph (v) of this section on and after July 1, 1991.

(5) *Testing.* Any owner or operator of a VOM emission source which is subject to paragraph (v) of this section shall demonstrate compliance with paragraph (v)(3) of this section by using the applicable test methods and procedures specified in paragraph (a)(4) of this section.

(6) The control requirements in this paragraph apply to the 7 blenders and 3 moguls of the adhesive coating solution formulation (compounding) operations at the Minnesota Mining and Manufacturing Corporation's (3M) Bedford Park facility in Cook County, Illinois, instead of the control requirements in paragraph (v)(3) of this section.

(i) After September 1, 1991, the following operating restrictions shall apply to 3M's Bedford Park, Illinois, compounding operations.

(A) The combined operating hours for all blenders shall not exceed 8,400 hours per quarter (rolled on a monthly basis). The combined quarterly operating hours of all blenders are to be calculated as follows:

(*1*) By the 15th of each month, compute the combined monthly operating hours of all blenders during the previous month.

(*2*) By the 15th of each month, add the monthly operating hours of all blenders for the 3 previous months (to obtain the combined quarterly operating hours of all blenders).

(B) The combined operating hours for all moguls shall not exceed 4,200 hours per quarter (rolled on a monthly basis). The quarterly operating hours of all moguls are to be calculated as follows:

(*1*) By the 15th of each month, compute the combined monthly operating hours of all moguls during the previous month.

(*2*) By the 15th of each month, add the monthly operating hours of all moguls for the 3 previous months (to obtain the combined quarterly operating hours of all moguls).

(ii) Beginning on September 1, 1991, the owner and operator of the 3M Bedford Park Plant in Bedford Park, Illinois, shall keep the following records. These records shall be compiled on a monthly basis, be retained at the 3M facility for a period of 3 years, and be made available to the Administrator upon request.

(A) Separate monthly records for each of the 7 blenders identifying each batch and the length of each batch as well as the total monthly hours of operation for all blenders.

(B) Separate monthly records for each of the 3 moguls identifying each batch and the length of each batch as well as the total monthly hours of operation for all moguls.

(w) *Miscellaneous organic chemical manufacturing processes*—(1) *Applicability.* (i) The requirements of paragraph (w) of this section shall apply to a plant's miscellaneous organic chemical manufacturing process emission sources which are not included within any of the source categories specified in subparts (B), (Q) (excluding sections

215.432 and 215.436), (R) (excluding sections 215.447, 215.450, and 215.452), (S), (V), (X), (Y) (sections 215.582, 215.583, and 215.584), or (Z) of 35 Ill. Adm. Code 215 (incorporated by reference as specified in 40 CFR 52.742), or specified in paragraph (d), (e), (h), (i), (j), or (q)(1) of this section; if the plant is subject to paragraph (w) of this section. A plant is subject to paragraph (w) of this section if it contains process emission sources, not regulated by subparts (B), (Q) (excluding sections 215.432 and 215.436), (R) (excluding sections 215.447, 215.450, and 215.452), (S), (V), (X), (Y) (sections 215.582, 215.583, and 215.584), or (Z) of 35 Ill. Adm. Code 215 (incorporated by reference as specified in 40 CFR 52.742), or by paragraph (d), (e) (excluding paragraph (e)(1)(i)(L)), (h) (excluding paragraph (h)(5)), (i), (j), or (q)(1) of this section; which as a group both:

(A) Have maximum theoretical emissions of 91 Mg (100 tons) or more per calendar year of VOM if no air pollution control equipment were used, and

(B) Are not limited to less than 91 Mg (100 tons) of VOM emissions per calendar year in the absence of air pollution control equipment, through production or capacity limitations contained in a federally enforceable construction permit or a SIP or FIP revision.

(ii) If a plant ceases to fulfill the criteria of paragraph (w)(1)(i) of this section, the requirements of paragraph (w) of this section shall continue to apply to a miscellaneous organic chemical manufacturing process emission source which was ever subject to the control requirements of paragraph (w)(3) of this section.

(iii) No limits under paragraph (w) of this section shall apply to emission sources with emissions of VOM to the atmosphere less than or equal to 0.91 Mg (1.0 ton) per calendar year if the total emissions from such sources not complying with paragraph (w)(3) of this section does not exceed 4.5 Mg (5.0 tons) per calendar year.

(iv) For the purposes of paragraph (w) of this section, an emission source shall be considered regulated by a subpart (of the Illinois rules) or paragraph if it is subject to the limits of that subpart (of the Illinois rules) or paragraph. An emission source is not considered regulated by a subpart (of the Illinois rules) or paragraph if its emissions are below the applicability cutoff level or if the source is covered by an exemption.

(v) For the purposes of paragraph (w) of this section, uncontrolled VOM emissions are the emissions of VOM which would result if no air pollution control equipment were used.

(2) *Permit conditions.* No person shall violate any condition in a permit when the condition results in exclusions of the plant or an emission source from paragraph (w) of this section.

(3) *Control requirements.* Every owner or operator of an emission source subject to paragraph (w) of this section shall comply with the requirements of paragraph (w)(3)(i) or (ii) of this section.

(i) Emission capture and control techniques which achieve an overall reduction in uncontrolled VOM emissions of at least 81 percent, or

(ii) An alternative control plan which has been approved by the Administrator as a SIP or FIP revision.

(4) *Compliance schedule.* Every owner or operator of an emission source subject to the control requirements of paragraph (w) of this section shall comply with the requirements of paragraph (w) of this section on and after July 1, 1991.

(5) *Testing.* Any owner or operator of a VOM emission source which is subject to paragraph (w) shall demonstrate compliance with paragraph (w)(3) of this section by using the applicable test methods and procedures specified in paragraph (a)(4) of this section.

(x) *Other emission sources*—(1) *Applicability*. (i) The requirements of paragraph (x) of this section shall apply to a plant's VOM emission sources, which are not included within any of the source categories specified in subpart (B), (Q) (excluding sections 215.432 and 215.436), (R) (excluding sections 215.447, 215.450, and 215.452), (S), (V), (X), (Y) (sections 215.582, 215.583, and 215.584), or (Z) of 35 Ill. Adm. Code 215 (incorporated by reference as specified in 40 CFR 52.742), or specified in paragraph (d), (e), (h), (i), (j), (q)(1), (s), (u), (v) or (w) of this section; if the plant is subject to paragraph (x) of this section. A

plant is subject to paragraph (x) of this section if it contains process emission sources, not regulated by subpart (B), (Q) (excluding sections 215.432 and 215.436), (R) (excluding sections 215.447, 215.450, and 215.452), (S), (V), (X), (Y) (sections 215.582, 215.583, and 215.584), or (Z) of 35 Ill. Adm. Code 215 (incorporated by reference as specified in 40 CFR 52.742), or by paragraph (d), (e) of this section (excluding paragraph (e)(1)(i)(L)), (h) (excluding paragraph (h)(5)), (i), (j), or (q)(1) of this section; which as a group both:

(A) Have maximum theoretical emissions of 91 Mg (100 tons) or more per calendar year of VOM if no air pollution control equipment were used, and

(B) Are not limited to less than 91 Mg (100 tons) of VOM emissions per calendar year in the absence of air pollution control equipment, through production or capacity limitations contained in a federally enforceable construction permit or a SIP of FIP revision.

(ii) If a plant ceases to fulfill the criteria of paragraph (x)(1)(i) of this section, the requirements of paragraph (x) of this section shall continue to apply to an emission source which was ever subject to the control requirements of paragraph (x)(3) of this section.

(iii) No limits under paragraph (x) of this section shall apply to emission sources with emissions of VOM to the atmosphere less than or equal to 2.3 Mg (2.5 tons) per calendar year if the total emissions from such sources not complying with paragraph (x)(3) of this section does not exceed 4.5 Mg (5.0 tons) per calendar year.

(iv) For the purposes of paragraph (x) of this section, an emission source shall be considered regulated by a subpart (of the Illinois rules) or paragraph if it is subject to the limits of that subpart (of the Illinois rules) or paragraph. An emission source is not considered regulated by a subpart (of the Illinois rules) or paragraph of its emissions are below the applicability cutoff level or if the source is covered by an exemption.

(v) The control requirements in paragraphs (u), (v), (w), and (x) of this section shall not apply to sewage treatment plants, vegetable oil processing plants, coke ovens (including by-product recovery plants), fuel combustion sources, bakeries, barge loading facilities, jet engine test cells, pharmaceutical manufacturing, production of polystyrene foam insulation board (including storage and extrusion of scrap where blowing agent is added to the polystyrene resin at the plant), production of polystyrene foam packaging (*not* including storage and extrusion of scrap where blowing agent is added to the polystyrene resin at the plant), and iron and steel production.

(2) *Permit conditions.* No person shall violate any condition in a permit when the condition results in exclusion of the plant or an emission source from paragraph (x) of this section.

(3) *Control requirements.* Every owner or operator of an emission source subject to paragraph (x) of this section shall comply with the requirements of paragraph (x)(3) (i), (ii) or (iii) of this section.

(i) Emission capture and control equipment which achieve an overall reduction in uncontrolled VOM emissions of at least 81 percent, or

(ii) For coating lines, the daily-weighted average VOM content shall not exceed 0.42 kg VOM/l (3.5 lbs VOM/gal) of coating (minus water and any compounds which are specifically exempted from the definition of VOM) as applied during any day. Owners and operators complying with this paragraph are not required to comply with section 215.301 of 35 Ill. Adm. Code 215 (incorporated by reference as specified in 40 CFR 52.742), or

(iii) An alternative control plan which has been approved by the Administrator as a SIP or FIP revision.

(4) *Compliance schedule.* Every owner or operator of an emissions source which is subject to paragraph (x) of this section shall comply with the requirements of paragraph (x) of this section on and after July 1, 1991.

(5) *Testing.* Any owner or operator of a VOM emission source which is subject to paragraph (x) of this section shall demonstrate compliance with paragraph (x)(3) of this section by using the applicable test methods and procedures specified in paragraph (a)(4) of this section.

(6) The control requirements in this paragraph apply to the varnish operations at the General Motors Corporation, Electro-Motive Division Plant (GMC Electro-Motive), LaGrange, Illinois, instead of the control requirements in paragraph (x)(3) of this section.

(i) After July 1, 1991, no coatings shall at any time be applied which exceed the following emission limitations for the specified coating.

(A) 8.0 lbs VOM per gallon of coating (minus water and any compounds which are specifically exempted from the definition of VOM) as applied at each coating applicator to coat Nomex rings. Such coating consists of Monsanto Skybond 705 Polyamide Resin (EMD P/N 9088817) and diluents. The Administrator must be notified at least 10 days prior to the use of any replacement coating(s) and/or diluents for coating Nomex rings.

(B) 6.8 lbs VOM per gallon of coating (minus water and any compounds which are specifically exempted from the definition of VOM) as applied at each coating applicator for any coatings not specified in paragraph (x)(6)(i)(A) of this section.

(ii) After July 1, 1991, the volume of coatings used shall not exceed the following:

(A) 600 gallons per year total for all coatings specified in paragraph (x)(6)(i)(A) of this section. The yearly volume of coatings used are to be calculated as follows:

(1) Compute the volume of specified coating used each month by the 15th of the following month.

(2) By the 15th of each month, add the monthly coating use for the 12 previous months (to obtain the yearly volume of coatings used).

(B) 28,500 gallons per year total for all coatings other than those specified in paragraph (x)(6)(i)(A) of this section. The yearly volume of coatings used are to be calculated as specified in paragraphs (x)(6)(ii)(A)(1) and (x)(6)(ii)(A)(2) of this section.

(iii) Beginning on July 1, 1991, the owner and operator of the General Motors Corporation Electro-Motive Division Plant in LaGrange, Illinois shall keep the following records for each month. All records shall be retained at General Motors for 3 years and shall be made available to the Administrator on request.

(A) The name and identification number of each coating as applied on any coating line within the varnish operation.

(B) The weight of VOM per volume and the volume of each coating (minus water and any compounds which are specifically exempted from the definition of VOM) as applied each month on any coating line within the varnish operation.

(7) The control, recordkeeping, and monitoring requirements in this paragraph apply to the aluminum rolling mills at the Reynolds Metals Company's McCook Sheet & Plate Plant in McCook, Illinois (Cook County) instead of the control requirements and test methods in the other parts of paragraph (x), and the recordkeeping requirements in paragraph (y) of this section. All of the following requirements must be met by Reynolds on and after July 7, 1995.

(i) Only organic lubricants with initial and final boiling points between 460 degrees F and 635 degrees F, as determined by a distillation range test using ASTM method D86–90, are allowed to be used at Reynolds' aluminum sheet cold rolling mills numbers 1 and 7. All incoming shipments of organic lubricant for the number 1 and 7 mills must be sampled and each sample must undergo a distillation range test to determine the initial and final boiling points using ASTM method D86–90. A grab rolling lubricant sample shall be taken from each operating mill on a monthly basis and each sample must undergo a distillation range test, to determine the initial and final boiling points, using ASTM method D86–90.

(ii) An oil/water emulsion, with no more than 15 percent by weight of petroleum-based oil and additives, shall be the only lubricant used at Reynolds' aluminum sheet and plate hot rolling mills, 120 inch, 96 inch, 80 inch, and 145 inch mills. A grab rolling lubricant sample shall be taken from each operating mill on a monthly basis and each sample shall be tested for the percent by weight of petroleum-based oil and additives by ASTM Method D95–83.

(iii) The temperature of the inlet supply of rolling lubricant for aluminum sheet cold rolling mills numbers 1 and 7 shall not exceed 150°F, as measured at or after (but prior to the lubricant nozzles) the inlet sump. The temperature of the inlet supply of rolling lubricant for the aluminum sheet and plate hot rolling mills, 120 inch, 96 inch, 80 inch, and 145 inch mills shall not exceed 200°F, as measured at or after (but prior to the lubricant nozzles) the inlet sump. Coolant temperatures shall be monitored at all the rolling mills by use of thermocouple probes and chart recorders or electronic data recorders.

(iv) All distillation test results for cold mill lubricants, all percent oil test results for hot mill lubricants, all coolant temperature recording charts and/or temperature data obtained from electronic data recorders, and all oil/water emulsion formulation records, shall be kept on file, and be available for inspection by USEPA, for three years.

(8) The control and recordkeeping requirements in this paragraph apply to the silk screen presses and associated ovens, cleaning operations and laminators at Parisian's Novelty Company (Parisian), Chicago, Illinois, facility, instead of the control requirements in paragraphs (x)(8) (u)(3) and (x)(3) of this section and the recordkeeping requirements in paragraph (x)(8)(y) of this section.

(i) After March 1, 1993, no coatings or inks shall at any time be applied, at any coating or ink applicator, which exceed the following emission limitations for the specified coating or ink.

(A) 6.65 pounds (lbs) volatile organic material (VOM) per gallon of ink (minus water and any compounds which are specifically exempted from the definition of VOM) as applied on Parisian's silk screen presses.

(B) 6.4 lbs VOM per gallon of adhesive coating (minus water and any compounds which are specifically exempted from the definition of VOM) as applied on Parisian's laminators. Such adhesive is identified as MIX #963.

(ii) After March 1, 1993, the volume of coating and ink used shall not exceed the following:

(A) 2,556 gallons per year total for all inks. The yearly volume of inks used is to be calculated as follows:

(*1*) Compute the volume of ink used each month by the 15th of the following month.

(*2*) By the 15th of each month, add the monthly ink usage for the 12 previous months (to obtain the yearly volume of ink used).

(B) 780 gallons per year total for all coatings specified in paragraph (x)(8)(i)(B) of this section. The yearly volume of coatings used are to be calculated as specified in paragraphs (x)(8)(ii)(A)(*1*) and (x)(8)(ii)(A)(*2*) of this section.

(iii) Beginning on March 1, 1993, the owner and operator of Parisian's plant in Chicago, Illinois, shall keep the following records for each month. All records shall be retained at Parisian for 3 years and shall be made available to the Administrator on request.

(A) The name and identification number of each coating as applied on any laminator.

(B) The weight of VOM per volume and the volume of each coating (minus water and any compounds which are specifically exempted from the definition of VOM) as applied each month on any laminator.

(C) The weight of VOM per volume and the volume of each type of ink (minus water and any compounds which are specifically exempted from the definition of VOM) as applied each month on any screen press.

(iv) After March 1, 1993, no more than 84 gallons per year of denatured alcohol may be used for cleaning labels at Parisian. The yearly volume of denatured alcohol used is to be calculated as specified in paragraphs (x)(8)(ii)(A)(*1*) and (x)(8)(ii)(A)(*2*) of this section. Beginning on March 1, 1993, Parisian shall keep monthly records of the type, volume, and VOM content of all solvents used for label cleaning. These records shall be retained at Parisian for 3 years and shall be made available to the Administrator on request.

(v) After March 1, 1993, no more than 7,932 gallons per year of screen wash #956 may be used on Parisian's screen cleaner. The yearly volume of screen wash #956 used is to be calculated as specified in paragraphs (x)(8)(ii)(A)(*1*)

and (x)(8)(ii)(A)(*2*) of this section. Beginning on March 1, 1993, Parisian shall keep monthly records of the type, volume, and VOM content of all cleaning compounds used on Parisian's screen cleaner. These records shall be retained at Parisian for 3 years and shall be made available to the Administrator on request.

(vi) After March 1, 1993, only those cleaners specifically identified in paragraphs (x)(8)(iv) and (x)(8)(v) of this section may be used at Parisian.

(9) The control requirements in this paragraph apply to the process sources listed in paragraph (x)(9)(i)(A) of this section at the Nalco Chemical Company facility in Bedford Park, Illinois, instead of the control requirements in paragraph (x)(3) of this section.

(i) *Production and Operation Restrictions.*

(A) On and after October 1, 1992, the maximum volatile organic compound (VOC) emissions per batch, the 12-month rolling average number of batches per year, and the peak limit of batches per month shall not exceed the following limits:

Source	Maximum VOC emissions, lb/batch	12-mo. rolling average limit batch/yr	Peak batch limit, batch/month
(*1*) System 1 charge	0.16	280	33.
System 1 purge	1.35		
(*2*) 24–T–156, 157	2.60	300	33.
(*3*) 28–T–217, 234	0.23	402	45.
(*4*) 28–T–214–216	5.70	603	65.
(*5*) 20–R–182, 185	0.02	72	8.
(*6*) 20–R–130	0.07	340	38.
(*7*) 20–R–155	0.21	254	29.
(*8*) 20–WT–174	0.21	254	29.
(*9*) 12–T–97–99	4.6E–4 lb/hr	8,760 hr/yr	744 hr/mo.
(*10*) 12–T–95	4.0E–6 lb/hr	8,760 hr/yr	744 hr/mo.
(*11*) 12–T–96	7.7E–5 lb/hr	8,760 hr/yr	744 hr/mo.
(*12*) 12–T–67, 73	0.003 lb/hr	8,760 hr/yr	744 hr/mo.
(*13*) 20–T–121–122	0.85	312	34.
(*14*) 20–T–123–125	5.4	616	68.
(*15*) 20–T–140, 142	8.0	600	65.
(*16*) 20–T–159	0.31	416	46.
(*17*) 20–R–193, 200	9.8	540	59.
(*18*) 32–R–300	0.18	365	41.
(*19*) 32–T–302	0.21	365	41.
(*20*) 32–T–304	0.21	730	81.
(*21*) 32–T–314	0.23	365	41.
(*22*) 32–T–322	0.21	365	41.
(*23*) 32–T–328	0.23	365	41.
(*24*) 10–T–61	0.001	365—containing organic	31—containing organic.
(*25*) 24–T–441, 166	0.12	730	81.
(*26*) 25–T–284, 440, 443–444	0.28	730	81.
(*27*) 25–T–170	4E–6	104	12.
(*28*) Tank truck loading	0.12 lb/truck	1,600 trucks/yr	134 trucks/mo.
(*29*) System 2	0.36	280	33.
(*30*) System 4	2.88	280	33.
(*31*) 25–R–164	0.10	365	41.
(*32*) 25–R–205	0.14	365	41.
(*33*) Drum station	3.51	1,005	110.
(*34*) V–4SAC	1.56	254	29.
(*35*) 20–CT–155	13.90	254	29.
(*36*) 12–SE–100	1.10 lb/hr	8,760 hr/yr	744 hr/mo.
(*37*) Drum exhaust hood A	1.00	365—involving use of organic material	31—involving use of organic material.
(*38*) 24–T–230	0.98	730	81.
(*39*) 8–CT–1	0.002 lb/hr	8,760 hr/yr	744 hr/mo.
(*40*) 9–CT–1	0.002 lb/hr	8,760 hr/yr	744 hr/mo.
(*41*) 10–CT–1	0.005 lb/hr	8,760 hr/yr	744 hr/mo.
(*42*) 22–CT–1	0.003 lb/hr	8,760 hr/yr	744 hr/mo.
(*43*) 25–CT–1	0.005 lb/hr	8,760 hr/yr	744 hr/mo.
(*44*) 25–CT–2	0.002 lb/hr	8,760 hr/yr	744 hr/mo.
(*45*) 29–CT–1	0.002 lb/hr	8,760 hr/yr	744 hr/mo.
(*46*) 32–CT–1	0.005 lb/hr	8,760 hr/yr	744 hr/mo.

(*47*) 36–CT–1	0.002 lb/hr	8,760 hr/yr	744 hr/mo.
(*48*) 32–T–325	0 [a]	365	41.
(*49*) 26–R–195	0.1 [a]	365	41.
(*50*) Continuous polymer-blending	0.1 lb/hr [a]	2,000 hr/yr	
(*51*) Portafeed washer booth 1	0.84 lb/hr [b]	4,160 hr/yr	744 hr/mo.
(*52*) Portafeed washer booth 2	0.84 lb/hr [b]	8,736 hr/yr	744 hr/mo.
(*53*) 32–T–392	4.4E–7	104	12.

[a] Assumed value.
[b] Based on monitoring data.

(B) The following equation shall be used to calculate maximum VOC emissions per batch for the process sources listed in paragraphs (x)(9)(i)(A)(*1*) (charge only and (*2*) through (*28*) and (*53*) of this section:

$$ER(lb/batch) = \frac{Q_O(gal/batch) \times M_V(lb/mole) \times P(mmHg)}{constant_1([gal][mmHg]/mole)}$$

Where:

ER = VOC emission rate;

Q_o = Quantity of organic per batch or charge rate;

M_v = Molecular weight of the volatile component;

P = Partial pressure of the volatile component for mixtures of liquid made up with more than one chemical; or vapor pressure for pure liquids made up of only one organic chemical; and

$Constant_1$ = (7.45 gal/ft^3)x(385 ft^3/mole)x(760 mmHg).

(C) The following equation shall be used to calculate the VOC emissions per batch from the process sources listed in paragraph (x)(9)(i)(A)(*1*) of this section (purge only) and (*29*) through (*32*) of this section:

$$ER(lb/batch) = \frac{PR(ft^3/batch) \times M_V(lb/mole) \times P(mmHg)}{constant_2([ft^3][mmHg]/mole)}$$

Where:

PR=Nitrogen purge rate; and

$Constant_2$ = (385 ft^3/mole)x(760 mmHg).

(D) The following equation shall be used to calculate the VOC emissions per batch from the drum station listed at paragraph (x)(9)(i)(A)(*33*) of this section:

ER(1b/batch) = (0.40 x [$ER_{28\text{-}T\text{-}217\text{-}218}$])+(0.60 x [$ER_{28\text{-}T\text{-}214\text{-}216}$])

(E) The following equation shall be used to calculate the VOC emissions per batch from the V–4SAC listed at paragraph (x)(9)(i)(A)(*34*) of this section:

$$ER(lb/batch) = \frac{FR_{1mmHg}(lb/batch) \times M_V(lb/mole) \times P_{V2}(mmHg)}{M_a(lb/mole) \times (760 - P_{V2})(mmHg)}$$

Where:

FR_{1mmHg} = Maximum air flow rate to maintain 1 mmHg;

M_a = Molecular weight of air; and

P_{v2} = Vapor pressure of organic at 65 °F and 760 mmHg.

(F) The following equation shall be used to calculate the VOC emissions per batch from 20–CT–155 listed at paragraph (x)(9)(i)(A)(*35*) of this section:

$$ER(lb/batch) = \left[ER_{tot}(lb/hr) - ER_{V-4SAC}(lb/hr)\right] \times hr/batch$$

Where:

ER_{tot} = Total system emission rate calculated using the following equation:

$$ER_{tot}(lb/hr) = \frac{FR_{1mmHg}(lb/hr) \times M_V(lb/mole) \times P_{V1}(mmHg)}{M_a(lb/mole) \times (350 - P_{V1})(mmHg)}$$

Where:

P_{v1} = Vapor pressure of organic at 200 °F and 350 mmHg.

(G) The following equation shall be used to calculate the VOC emissions per hour from 12–SE–100 listed at paragraph (x)(9)(i)(A)(*36*) of this section:

ER(lb/hr) = Evap (gm/cm²sec) × area (cm²) × 3600 sec/hr

Where:

Evap = Evaporation rate from a surface 8.93 cm × 8.9 cm (lb/[cm²] [sec]) calculated using the following equation:

$Evap = 10^{-7} M_v^{0.71} \times [0.034 (P_e - P_d)^{1.25} + 156 (P_e - P_d)]$

Where:

P_e = Partial pressure of the component from the spilled liquid;

P_d = Partial pressure of the component in the incident air stream, assumed to be 0 mmhg; and

Area = Surface area of the liquid.

(H) The following equation shall be used to calculate the VOC emissions per batch from the drum exhaust hood A listed at paragraph (x)(9)(i)(A)(*37*) of this section:

$$ER(lb/batch) = \frac{FR(ft^3/batch) \times M_V(lb/mole) \times P(mmHg)}{constant_2([ft^3][mmHg]/mole)}$$

Where:

FR = Air flow rate.

(I) The following equation shall be used to calculate the VOC emissions per batch from 24–T–230 listed at paragraph (x)(9)(i)(A)(*38*) of this section:

$$ER(lb/batch) = \frac{(V_H - V_A) \times M_V \times PP_{135°F} \times 0.5}{constant_3}$$

Where:

V_H = Head space volume at heated temperature 135°F;

V_A = Head space volume at ambient temperature 68°F;

PP_{135}°F = Partial pressure of volatile component at 135°F.

$Constant_3$ = (434 ft³/mole)(7.45 gal/ft³)x(760 mmHg)

(J) The following equations shall be used to calculate the VOC emissions per batch from the process sources listed in paragraph (x)(9)(i) (*39*) through (*47*) of this section:

$$ER_A(1b/yr) = \frac{V_R(gal) \times M_V(lb/mole) \times P(mmHg) \times org}{t(yr) \times constant_1\ ([gal]\ [mmHg]/mole)}$$

$$ER_B(lb/yr) = C_B \times V_T(gal) \times d_B(lb/gal) \times (charges/yr) \times org$$

$$ER_C(lb/yr) = C_C \times Evap(gal/min) \times d_C(lb/gal) \times (min/yr) \times org$$

Where:

V_R = Refill volume;
t = Time between refills;
org = Fraction of organic component in product;
C_B = Concentration of chemical B fed 3 times/week;
$_{VT}$ = Tower volume;
d_B = Density of chemical B;
C_C = Concentration of chemical C fed continuously;
Evap = Evaporation rate; and
d_c = Density of chemical C.

(K) The number of batches for each process source shall be calculated as follows:

(*1*) Compute the monthly number of batches for each process source by the 15th day of the following month.

(*2*) By the 15th day of each month, add the monthly number of batches for each process source for the 12 previous months to obtain the total number of batches per year.

(ii) *Recordingkeeping.*

(A) On and after October 1, 1992, the owner and operator of the Nalco Chemical Company facility in Bedford Park, Illinois, shall keep the following records for all process sources listed in paragraphs (x)(9)(i)(A) (*1*) through (*53*) of this section. These records shall be maintained for the units specified in paragraphs (x)(9)(i) (A) through (K) of this section, be compiled on a monthly basis, be retained at the facility for a period of 3 years, and be made available to the Administrator upon request.

(B) [Reserved]

(*1*) Calculations of the pounds per batch or pounds per hour (as appropriate) for each batch for each process source. This includes the information necessary for each calculation.

(*2*) The monthly number of batches for each process source.

(*3*) The total number of batches per year for the 12 previous months for each process source.

(10) The control requirements in this paragraph apply to the storage tanks listed in paragraph (x)(10)(i)(A) of this section at the Nalco Chemical Company facility in Bedford Park, Illinois, instead of the control requirements in paragraph (x)(3) of this section.

(i) *Production and Operation Restrictions.*

(A) On and after October 1, 1992, the product of the molecular weight of vapor in each storage tank (M_v), the true vapor pressure at bulk liquid conditions for each tank (P), and the paint factor (F_p); the storage tank maximum yearly throughput for each tank; and the maximum monthly throughput for each tank shall not exceed the following limits:

Tank No.	$M_V \times P \times F_p$, (lb) (mmhg)/lb-mole	Yearly throughput, gal/yr	Monthly throughput, gal/month
(*1*) 24–T–147	45.4	56,250	4,688
(*2*) 24–T–150	227	266,450	22,204
(*3*) 24–T–151	227	266,450	22,204
(*4*) 24–T–158N	18.9	173,830	14,486
(*5*) 24–T–158C	18.0	110,190	9,183
(*6*) 24–T–158S	1.17	52,010	4,334
(*7*) 24–T–160	226.8	266,450	22,204
(*8*) 24–T–161	227	182,450	15,204
(*9*) 24–T–162	473	93,900	7,825
(*10*) 20–T–101	3.72	90,290	7,525
(*11*) 20–T–102	1.80	122,900	10,242
(*12*) 20–T–103	420	23,960	1,997

Tank No.	$M_V \times P \times F_p$, (lb) (mmhg)/lb-mole	Yearly throughput, gal/yr	Monthly throughput, gal/month
(*13*) 20–T–104	180	475,900	39,659
(*14*) 20–T–105	370	52,360	4,363
(*15*) 20–T–106	1,210	623,100	51,926
(*16*) 20–T–107	294	90,040	7,503
(*17*) 20–T–108	1,360	81,470	6,789
(*18*) 20–T–109	1,390	167,060	13,922
(*19*) 20–T–153	180	35,000	2,917
(*20*) 20–T–131 [a]	.....	.....	.....
(*21*) 20–T–132 [a]	.....	.....	.....
(*22*) 20–T–133 [a]	.....	.....	.....
(*23*) 20–T–134 [a]	.....	.....	.....
(*24*) 20–T–135 [a]	.....	.....	.....
(*25*) 20–T–136	29.5	307,710	26,580
(*26*) 20–T–137 [a]			
(*27*) 20–T–138	29.5	307,710	26,580
(*28*) 32–T–305	288	785,550	65,462
(*29*) 32–T–306	66.5	165,350	13,779
(*30*) 32–T–307	66.5	294,750	24,563
(*31*) 32–T–308	66.5	128,470	10,706
(*32*) 32–T–310	66.5	77,290	6,441
(*33*) 32–T–311	66.5	182,130	15,177
(*34*) 32–T–319	50.0	688,950	57,413
(*35*) 32–T–320	50.0	688,950	57,413
(*36*) 32–T–326	70.0	248,440	20,703
(*37*) 32–T–331	70.0	489,540	40,795
(*38*) 32–T–332	70.0	70,380	5,865
(*39*) 32–T–333	70.0	270,850	22,571
(*40*) 32–T–334	70.0	210,610	18,267
(*41*) 32–T–335	70.0	418,200	34,850
(*42*) 32–T–336	70.0	632,460	52,706
(*43*) 32–T–337	798	53,850	4,488
(*44*) 17–T–206	27,000	300,760	25,063
(*45*) 17–T–208	27,000	300,760	25,063
(*46*) 17–T–207	2.48	180,180	15,016
(*47*) 17–T–209	2.48	180,180	15,016
(*48*) 24–T–515	331	216,860	18,072
(*49*) 25–T–282	1.42	1,920,410	160,034
(*50*) 25–T–283	1.42	1,920,410	160,034
(*51*) 24–T–442	18.0	90,990	7,583
(*52*) 17–T–210	47.9	582,990	48,583
(*53*) 17–T–211	47.9	582,990	48,583
(*54*) 17–T–212	508	728,420	60,702
(*55*) 17–T–213	508	728,420	60,702
(*56*) 17–T–401	50.0	131,970	10,998
(*57*) 17–T–402	15.0	120,160	10,014
(*58*) 17–T–403	6.20	127,770	10,648
(*59*) 17–T–404	26.5	1,601,510	133,460
(*60*) 17–T–405	50.0	113,830	9,486
(*61*) 17–T–406	40.0	231,030	19,253
(*62*) 17–T–407	206	135,180	11,265
(*63*) 17–T–409	395	327,410	27,285
(*64*) 17–T–410	395	129,290	10,774
(*65*) 17–T–411	50.0	213,870	17,843
(*66*) 17–T–412	50.0	277,840	23,153
(*67*) 17–T–414	50.0	72,920	6,077
(*68*) 17–T–415	50.0	56,140	4,678
(*69*) 17–T–416	395	393,550	32,796
(*70*) 17–T–417	23.4	233,780	19,482
(*71*) 17–T–418	115	873,270	72,773
(*72*) 17–T–419	119	278,460	23,205
(*73*) 17–T–420	112	730,780	60,898
(*74*) 17–T–421	25.2	300,010	25,001
(*75*) 17–T–422	115	873,270	72,773
(*76*) 17–T–423	23.4	215,060	17,922
(*77*) 17–T–424	23.4	209,610	17,468
(*78*) 26–T–218	50.0	64,890	5,408
(*79*) 26–T–219	1.50	197,900	16,492
(*80*) 26–T–220	2,460	160,020	13,336
(*81*) 26–T–221	50.0	74,820	6,235
(*82*) 26–T–222	80.0	66,590	5,550
(*83*) 26–T–224	4.80	225,290	18,774
(*84*) 26–T–225	50.0	36,610	3,051

Tank No.	$M_V \times P \times F_p$, (lb) (mmhg)/lb-mole	Yearly throughput, gal/yr	Monthly throughput, gal/month
(*85*) 26–T–226	294	47,390	3,949
(*86*) 26–T–227	50.0	63,040	5,253
(*87*) 26–T–228	500	136,150	11,346
(*88*) 26–T–229	50.0	112,970	9,414
(*89*) 26–T–231	23.4	319,610	26,634
(*90*) 26–T–232	117	564,280	47,024
(*91*) 26–T–233	23.4	539,700	44,975
(*92*) 27–T–245	21.6	361,970	30,165
(*93*) 27–T–246	348	141,820	11,818
(*94*) 27–T–247	23.4	71,670	5,972
(*95*) 27–T–248	198	96,010	8,001
(*96*) 27–T–249	927	51,240	4,270
(*97*) 27–T–250	110	433,030	36,086
(*98*) 27–T–251	396	45,440	3,787
(*99*) 27–T–252	21.6	171,370	14,281
(*100*) 27–T–253	348	237,900	19,825
(*101*) 26–T–192	10.0	117,950	9,829
(*102*) 27–T–278	0.62	74,910	6,243
(*103*) 27–T–279	0.18	583,760	48,647
(*104*) 27–T–285	21.6	459,530	38,294
(*105*) 27–T–286	21.6	459,530	38,294
(*106*) 25–T–201	19.8	143,550	11,963
(*107*) 32–T–388	0.07	499,340	41,612
(*108*) 32–T–389	0.07	499,340	41,612
(*109*) 32–T–390	288	808,310	583,340
(*110*) 32–T–391	1.42	800,00	583,340

[a] Tank not in use.

(B) The throughput shall be calculated as follows:

(*1*) Compute the monthly throughput for each tank by the 15th day of the following month.

(*2*) By the 15th day of each month, add the monthly throughputs for the 12 previous months to obtain the yearly throughput.

(ii) *Recordkeeping.* (A) On and after October 1, 1992, the owner and operator of the Nalco Chemical Company facility in Bedford Park, Illinois, shall keep the following records for all storage tanks. These records shall be compiled on a monthly basis, be retained at the facility for a period of 3 years, and be made available to the Administrator upon request.

(*1*) The molecular weight of vapor in each storage tank (M_v), the true vapor pressure at bulk liquid conditions for each tank (P), the paint factor (F_p), and their product. F_p shall be determined from Table 4.3–1 of ''Compilation of Air Pollutant Emission Factors, Volume I: Stationary Point and Area Sources,'' AP–42, September 1985.

(*2*) The monthly throughput.

(*3*) The total throughput per year for the 12 previous months.

(B) [Reserved]

(iii) *Test Methods.* (A) The true vapor pressure at bulk liquid temperature shall be determined by using the procedures specified in paragraph (a)(8) of this section.

(B) The molecular weight of vapor in the storage tank shall be determined by using Table 4.3–2 ''Compilation of Air Pollutant Emission Factors, Volume I: Stationary Point and Area Sources,'' AP–42, September 1985, or by analysis of vapor samples. Where mixtures of organic liquids are stored in a tank, M_v shall be estimated from the liquid composition using the following equation:

$$M_v = M_a \frac{P_a X_a}{P_t} + M_b \frac{P_b X_b}{P_t}$$

Where:

M_a=Molecular weight of pure component a;

P_a=Vapor pressure of pure component a;

X_a=Mole fraction of pure component a in the liquid;

M_b=Molecular weight of pure component b;

P_b=Vapor pressure of pure component b;

X_b=Mole fraction of pure component b in the liquid; and

$P_t = P_a X_2 + P_b X_b$.

(11) The control requirements in this paragraph apply to the fugitive emission sources listed in paragraph (x)(11)(i)(A) of this section at the Nalco Chemical Company facility in Bedfore Park, Illinois, instead of the control requirements in paragraph (x)(3) of this section.

(i) *Production and Operation Restrictions.*

(A) On and after October 1, 1992, all components (e.g., pumps, valves, flanges, pressure relief valves (PRV's), and open end lines) at the specified locations (e.g., Building 32—Tube Reactor System, etc.), and in the specified type of service (e.g., heavy liquid stratified, light liquid stratified, etc.) shall be limited by the maximum monthly hours in the following table:

(ii) *Recordkeeping.*

(A) On and after October 1, 1992, the owner and operator of the Nalco Chemical Company facility in Bedford Park, Illinois, shall keep the following records for all fugitive emission sources. These records shall be compiled on a monthly basis, be retained at the facility for a period of 3 years, and be made available to the Administrator upon request.

(*1*) The total number of hours of organic service for each component at each location specified in paragraphs (x)(11)(i)(A) (*1*) through (*10*) of this section.

(*2*) The vapor pressure of each organic compound in each component at each location specified in paragraphs (x)(11)(i)(A) (*1*) through (*10*) of this section.

(B) [Reserved]

(12) The control and recordkeeping and reporting requirements, as well as the test methods in this paragraph, apply to the gravure and screen press operations at the Meyercord Corporation (Meyercord) in Carol Stream, Illinois, instead of the requirements in paragraphs (x)(1) through (x)(5) of this section.

(i) After July 1, 1991, no materials which contain volatile organic material (VOM), including coatings, inks, and cleaning material, may be used at any gravure or screen press unless the total VOM emissions remain below 100 tons of VOM for every consecutive 365-day period, or fraction thereof, starting on July 1, 1991. A new 365-day period starts on each day. The VOM emissions, which are to be calculated on a daily basis, are to be added to the VOM emissions for the prior 364 days (but not including any day prior to July 1, 1991). VOM emissions are based upon the VOM content of the material and the volume of material used. The effect of add-on control equipment is not considered in calculating VOM emissions; that is, the VOM emissions are to be determined as if the press(es) do(es) not have add-on control equipment. The applicable test methods and procedures specified in paragraph (a)(4) of this section are to be used in determining daily VOM emissions.

(ii) The VOM content of each coating, ink, and cleaning solution shall be determined by the applicable test methods and procedures specified in paragraph (a)(4) of this section to establish the records required under paragraph (x)(12)(ii) of this section. Beginning on July 1, 1991, the owner or operator of the subject presses shall collect and record all of the following information each day and maintain the information at the facility for 3 years:

(A) The name and identification number of each coating, ink, and cleaning solution as applied on any press.

(B) The pounds (lbs) of VOM per gallon of each coating, ink, and cleaning solution (minus water and any compounds which are specifically exempted from the definition of VOM) as applied on any press.

(C) The total gallons of each coating, ink, and cleaning solution (minus water and any compounds which are specifically exempted from the definition of VOM) used per day.

(D) The total lbs of VOM contained in the volume of each coating, ink, and cleaning solution used per day on any press. The lbs of VOM per day is to be calculated by multiplying the lbs of VOM per gallon (minus water and any compounds which are specifically exempted from the definition of VOM) times the gallons (minus water and any compounds which are specifically exempted from the definition of VOM) used per day.

(E) The total lbs of VOM per day from all coatings, inks, and cleaning solutions used on all presses. The total lbs of VOM per day is to be obtained by adding the lbs of VOM per day contained in all coatings, inks, and cleaning solutions.

(F) Within 7 days after each 365-day period, the VOM emissions (as calculated in paragraph (x)(12)(ii)(E)) of this section before add-on control, from the 365-day period, are to be determined.

Starting on July 7, 1992, VOM emissions are to be determined for the 365 days ending 7 days earlier. Each day concludes a new 365-day period. However, no VOM emissions are to be included for any days prior to July 1, 1991. For example, on July 17, 1991, the emissions from July 1, through July 10, 1991, are to be included, whereas on January 7, 1994, the emissions from January 1, 1993, through December 31, 1993, are to be included.

(13) The control and recordkeeping and reporting requirements, as well as the test methods in this paragraph, apply to the sheet fed cold set presses and web heatset presses at the Wallace Computer Services, Inc. (Wallace) printing and binding plant in Hillside, Illinois, instead of the requirements in 40 CFR 52.741(h) and 40 CFR 52.741(x)(1) through 40 CFR 52.741(x)(5).

(i) After July 1, 1991, no inks shall at any time be applied, at the presses indicated below, which exceed the pounds (lbs) volatile organic material (VOM) per gallon of ink (minus water and any compounds which are specifically exempted from the definition of VOM) limit established for each press. After July 1, 1991, the yearly volume of ink used at each press, in gallons of ink (minus water and any compounds which are specifically exempted from the definition of VOM) per year, shall not exceed the gallons per year limit established below for each press. The yearly volume of ink used per press is to be calculated according to the procedure in paragraph (x)(13)(iii) of this section.

Press	Lbs VOM/ gallon ink	Gallons/ year ink
14	1.68	276
16	1.68	1896
22	3.01	2712
23	3.01	13140
25	3.01	12720
26	3.01	4764

(ii) After July 1, 1991, no materials (other than those inks subject to the limits in paragraph (x)(13)(i)) of this section, shall at any time be applied or used, at the presses indicated below, which exceed the lbs VOM per gallon of material (minus water and any compounds which are specifically exempted from the definition of VOM) limit established for each press. After July 1, 1991, the yearly volume of material (excluding ink and water) used at each press, in gallons of material (minus water and any compounds which are specifically exempted from the definition of VOM) per year, shall not exceed the gallons per year limit established for each press. The yearly volume of material (excluding ink and water) used per press is to be calculated according to the procedure in paragraph (x)(13)(iii) of this section.

Press	Lbs VOM/ gallon material	Gallons/ year material
14	6.9	612
16	6.9	8,340
22	7.1	360
23	7.1	480
25	7.1	516
26	7.1	1,848

(iii) The yearly volume of ink/material used is to be calculated as follows:

(A) Compute the volume of ink/material used each month per press by the 15th of the following month.

(B) By the 15th of each month, add the monthly ink/material usage per press for the 12 previous months (to obtain the yearly volume of ink used).

(iv) Beginning on July 1, 1991, the owner and operator of Wallace's plant in Hillside, Illinois, shall keep the following records for each press for each month. All records shall be retained by Wallace for 3 years and shall be made available to the Administrator on request:

(A) The name and identification number of each ink, fountain solution, fountain solution additive, cleaning solvent, and other VOM containing material as applied or used.

(B) The weight of VOM per volume of each ink, fountain solution, fountain solution additive, cleaning solvent, and each other VOM containing material (minus water and any compounds which are specifically exempted from the definition of VOM) as applied or used each month.

(C) The volume of ink (minus water and any compounds which are specifically exempted from the definition of VOM) as applied each month.

(D) The total volume of miscellaneous VOM containing materials (minus water and any compounds which are specifically exempted from the definition of VOM), other than inks, that are used each month.

(v) Any record showing a violation of paragraph (x)(13)(i) or (x)(13)(ii) of this section shall be reported by sending a copy of such record to the Administrator within 30 days of the violation.

(vi) To determine compliance with paragraphs (x)(13)(i) and (x)(13)(ii) of this section and to establish the records required under paragraph (x)(13)(iv) of this section the VOM content of each ink and miscellaneous VOM containing material shall be determined by the applicable test methods and procedures specified in paragraph (a)(4) of this section.

(14) The control and recordkeeping and reporting requirements, as well as the test methods in this paragraph, apply to the power-operated silk screen presses, the hand screen presses, the screen adhesive printing lines, the Andreotti rotogravure press, the Halley Rotogravure press, and the Viking press at the American Decal and Manufacturing Company's plant in Chicago, Illinois, instead of the requirements in paragraphs (h) and (x)(1) through (x)(5) of this section. The emissions from the sources listed above (in paragraph (x)(14) of this section) are to be included in the calculation of ''maximum theoretical emissions'' for determining applicability for any other sources (for which applicability is based on the quantity of maximum theoretical emissions) at American Decal and Manufacturing Company's Chicago plant not included in paragraph (x)(14) of this section.

(i) After July 24, 1992, no inks, coatings, thinner, clean-up material or other VOC-containing material shall at any time be applied, at the presses/printing lines listed above (in paragraph (x)(14) of this section), which exceed the VOC content (in percent by weight VOC) limit established below. After July 24, 1992, the yearly usage (in weight of material applied) of ink, coating, thinner, clean-up material, and other VOC-containing material, shall not exceed the applicable pounds per year limit established below. The yearly weight of ink, coating, thinner, clean-up material, and other VOC-containing material is to be calculated according to the procedure in paragraph (x)(14)(ii) of this section.

Material	Usage (lbs/yr)	Weight Percent VOC
#6 ink	9,076	56.8
#7 ink	1,278	54.2
#2 ink	2,911	72.7
Blue N.C. lacq.	394	64.3
Black M lacq.	753	61.6
4B9L Clear	2,451	77.1
4B9L H Clear	3,360	75.0
Flow-Out Agent	1,795	97.1
D.S. Stamp lacq.	1,047	62.0
Dull write-on	86	71.6
AH–16	621	84.5
Thinner (#7,6)	2,350	100.0
Exon 470	1,668	65.4
9L Clear	2,451	77.1
White M lacq	3,467	47.0
Tedlar Gr. Vehicle	1,050	66.7
TH–98	22,047	73.2
TH–57	59	69.5
TH–14M	16,520	0.7
PS 160	10,644	3.0
#1 tint	4,872	69.3
#2 tint	4,256	83.7
Roto Color	13,884	62.0
1st SS White	25,740	51.5
2nd SS White	25,740	51.5
Clean Up	108,742	100.0
Other Materials	400	100.0

(ii) The yearly weight of material used is to be calculated as follows:

(A) Compute the weight of each ink, coating, thinner, clean-up material,

and other VOC-containing material used each month by the 15th of the following month.

(B) By the 15th of each month, add the monthly usage (in pounds) for each ink, coating, thinner, clean-up material, and other VOC-containing material for the twelve previous months (to obtain the yearly weight of each ink, coating, thinner, clean-up material used). A comparison of these yearly usage levels (in pounds) with purchase records must be made to ensure the accuracy of the monthly usage levels (in pounds) obtained to satisfy paragraph (x)(14)(ii)(A) of this section.

(iii) Beginning on August 1, 1992, the owner and operator of the American Decal and Manufacturing Company plant in Chicago, Illinois, shall keep the following records for each ink, coating, thinner, clean-up material, and other VOC-containing material for each month. All records shall be kept by the American Decal and Manufacturing Company for 3 years and shall be made available to the Administrator on request:

(A) The name and identification number of each ink, coating, thinner, clean-up material, and other VOC-containing material as applied or used.

(B) The weight percent VOC of each ink, coating, thinner, clean-up material, and each other VOC-containing material as applied or used each month.

(C) The as applied weight of each ink, coating, thinner, clean-up material, and other VOC-containing material used each month.

(iv) Any record showing a violation of paragraph (x)(14)(i) of this section after October 20, 1995 shall be reported by sending a copy of such record to the Administrator within 30 days of the violation.

(v) To determine compliance with paragraph (x)(14)(i) of this section and to establish the records required under paragraph (x)(14)(iii) of this section, the weight percent VOC of each ink, coating, thinner, clean-up material, and other VOC-containing material shall be determined by the applicable test methods and procedures specified in paragraph (a)(4) of this section. Any material reported to be 100 percent VOC does not have to be tested for weight percent VOC.

(y) *Recordkeeping and reporting for non-CTG sources*—(1) *Exempt emission sources.* Upon request by the Administrator, the owner or operator of an emission source which is exempt from the requirements of paragraphs (u), (v), (w), (x), or (e)(3)(ii) of this section shall submit records to the Administrator within 30 calendar days from the date of the request that document that the emission source is exempt from those requirements.

(2) *Subject emission sources.* (i) Any owner or operator of a VOM emission source which is subject to the requirements of paragraph (u), (v), (w) or (x) of this section and complying by the use of emission capture and control equipment shall comply with the following:

(A) By July 1, 1991, or upon initial start-up of a new emission source, the owner or operator of the subject VOM emission source shall perform all tests and submit to the Administrator the results of all tests and calculations necessary to demonstrate that the subject emission source will be in compliance on and after July 1, 1991, or on and after the initial start-up date.

(B) On and after July 1, 1991, or on and after the initial start-up date, the owner or operator of a subject VOM emission source shall collect and record all of the following information each day and maintain the information at the facility for a period of three years:

(*1*) Control device monitoring data.

(*2*) A log of operating time for the capture system, control device, monitoring equipment and the associated emission source.

(*3*) A maintenance log for the capture system, control device and monitoring equipment detailing all routine and non-routine maintenance performed including dates and duration of any outages.

(C) On and after July 1, 1991, the owner or operator of a subject VOM emission source shall notify the Administrator in the following instances:

(*1*) Any record showing a violation of the requirements of paragraphs (u), (v), (w), or (x) of this section shall be reported by sending a copy of such record to the Administrator within 30 days

following the occurrence of the violation.

(*2*) At least 30 calendar days before changing the method of compliance with paragraphs (u) or (x) of this section from the use of capture systems and control devices to the use of complying coatings, the owner or operator shall comply with all requirements of paragraph (y)(2)(ii)(A) of this section. Upon changing the method of compliance with paragraphs (u) or (x) of this section from the use of capture systems and control devices to the use of complying coatings, the owner or operator shall comply with all requirements of paragraph (y)(2)(ii) of this section.

(ii) Any owner or operator of a coating line which is subject to the requirements of paragraphs (u) or (x) of this section and complying by means of the daily-weighted average VOM content limitation shall comply with the following:

(A) By July 1, 1991, or upon initial start-up of a coating line subject to paragraph (u) or (x) of this section; the owner or operator of the subject coating line shall certify to the Administrator that the coating line will be in compliance on and after July 1, 1991, or on and after the initial start-up date. Such certification shall include:

(*1*) The name and identification number of each coating line which will comply by means of the daily-weighted average VOM content limitation.

(*2*) The name and identification number of each coating as applied on each coating line.

(*3*) The weight of VOM per volume and the volume of each coating (minus water and any compounds which are specifically exempted from the definition of VOM) as applied each day on each coating line.

(*4*) The instrument or method by which the owner or operator will accurately measure or calculate the volume of each coating as applied each day on each coating line.

(*5*) The method by which the owner or operator will create and maintain records each day as required in paragraph (y)(2)(ii)(B) of this section.

(*6*) An example of the format in which the records required in paragraph (y)(2)(ii)(B) of this section will be kept.

(B) On and after July 1, 1991, or on and after the initial start-up date, the owner or operator of a subject coating line shall collect and record all of the following information each day for each coating line and maintain the information at the facility for a period of three years:

(*1*) The name and identification number of each coating as applied on each coating line.

(*2*) The weight of VOM per volume and the volume of each coating (minus water and any compounds which are specifically exempted from the definition of VOM) as applied each day on each coating line.

(*3*) The daily-weighted average VOM content of all coatings as applied on each coating line as defined in paragraph (a)(3) of this section.

(C) On and after July 1, 1991, the owner or operator of a subject coating line shall notify the Administrator in the following instances:

(*1*) Any record showing violation of the requirements of paragraph (u) or (x) of this section shall be reported by sending a copy of such record to the Administrator within 30 days following the occurrence of the violation.

(*2*) At least 30 calendar days before changing the method of compliance with paragraph (u) or (x) of this section from the use of complying coatings to the use capture systems and control devices, the owner or operator shall comply with all requirements of paragraph (y)(2)(i)(A) of this section. Upon changing the method of compliance with paragraphs (u) or (x) of this section from the use of complying coatings to the use capture systems and control devices, the owner or operator shall comply with all requirements of paragraph (y)(2)(i) of this section.

(iii) Any owner or operator of a VOM emission source which is subject to the requirements of paragraphs (u), (v), (w) or (x) of this section and complying by means of an alternative control plan which has been approved by the Administrator as a SIP or FIP revision shall comply with the recordkeeping and reporting requirements specified in the altenative control plan.

(z) *Rules stayed.* Not withstanding any other provision of this subpart, the effectiveness of the following rules is stayed as indicated below.

(1) [Reserved]

(2) Compliance with all of 40 CFR 52.741 is stayed for 60 days (July 1, 1991, until August 30, 1991) as it pertains to the following parties: The Illinois Environmental Regulatory Group including its approximately 40 member firms; Allsteel, Incorporated; Riverside Laboratories, Incorporated; the Printing Industry of Illinois/Indiana Association including its member firms, and R.R. Donnelley & Sons Company; the rules applicable to General Motors Corporation; Reynolds Metals Company; Stepan Company; and Duo-Fast Corporation. Final compliance for these parties is extended 60 days from July 1, 1991 until August 30, 1991.

(3) The following rules are stayed from July 23, 1991, until USEPA completes its reconsideration as indicated:

(i) 40 CFR 52.741(e) only as it applies to Duo-Fast Corporation's Franklin Park, Illinois ''power-driven metal fastener'' manufacturing facility, and

(ii) 40 CFR 52.741 (w) and (y) only as it applies to Stepan Company's miscellaneous organic chemical manufacturing processes at its manufacturing facility located near Millsdale, Illinois.

When USEPA concludes its reconsideration, it will publish its decision and any actions required to effectuate that decision in the FEDERAL REGISTER.

(4)–(5) [Reserved]

APPENDIX A—LIST OF CHEMICALS DEFINING SYNTHETIC ORGANIC CHEMICAL AND POLYMER MANUFACTURING

OCPDB No.[1]	Chemical
20	Acetal.
30	Acetaldehyde.
40	Acetaldol.
50	Acetamide.
65	Acetanilide.
70	Acetic acid.
80	Acetic anhydride.
90	Acetone.
100	Acetone cyanohydrin.
110	Acetonitrile.
120	Acetophenone.
125	Acetyl chloride.
130	Acetylene.
140	Acrolein.
150	Acrylamide.
160	Acrylic acid & esters.
170	Acrylonitrile.
180	Adipic acid.
185	Adiponitrile.
190	Alkyl naphthalenes.
200	Allyl alcohol.
210	Allyl chloride.
220	Aminobenzoic acid.
230	Aminoethylethanolamine.
235	p-aminophenol.
240	Amyl acetates.
250	Amyl alcohols.
260	Amyl amine.
270	Amyl chloride.
280	Amyl mercaptans.
290	Amyl phenol.
300	Aniline.
310	Aniline hydrochloride.
320	Anisidine.
330	Anisole.
340	Anthranilic acid.
350	Anthraquinone.
360	Benzaldehyde.
370	Benzamide.
380	Benzene.
390	Benzenedisulfonic acid.
400	Benzene-sulfonic acid.
410	Benzil.
420	Benzilic acid.
430	Benzoic acid.
440	Benzoin.
450	Bennzonitrile.
460	Benzophenone.
480	Benzotrichloride.
490	Benzoyl chloride.
500	Benzyl chalcohol.
510	Benzyl amine.
520	Benzyl benzoate.
530	Benzyl chloride.
540	Benzyl dichloride.
550	Biphenyl.
560	Bisphenol A.
570	Bromobenzene.
580	Bromonaphthalene.
590	Butadiene.
592	1-butene.
600	n-butyl acetate.
630	n-butyl acrylate.
640	n-butyl alcohol.
650	s-butyl alcohol.
660	t-butyl alcohol.
670	n-butylamine.
680	s-butylamine.
690	t-butylamine.
700	p-pert-butyl benzoic acid.
750	n-butyraldehyde.
760	Butyric acid.
770	Butyric anhydride.
780	Butyronitrile.
785	Caprolactam.
790	Carbon disulfide.
800	Carbon tetrabromide.
810	Carbon tetrachloride.
820	Cellulose acetate.
840	Chloroacetic acid.
850	m-chloroaniline.
860	o-chloroaniline.
870	p-chloroaniline.
880	Chlorobenzaldehyde.
890	Chlorobenzene.
900	Chlorobenzoic acid.
905	Chlorobenzotrichloride.
910	Chlorobenzoyl chloride.
920	Chlorodifluoroethane.
921	Chlorodifluoromethane.
930	Chloroform

OCPDB No.[1]	Chemical
940	Chloronaphthalene.
950	o-chloronitrobenzene.
951	p-chloronitrobenzene.
960	Chlorophenols.
964	Chloroprene.
965	Chlorosulfonic acid.
970	m-chlorotoluene.
980	o-chlorotoluene.
990	p-chlorotoluene.
992	Chlorotrifluoromethane.
1000	m-cresol.
1010	o-cresol.
1020	p-cresol.
1021	Mixed cresols.
1030	Cresylic acid.
1040	Crontonaldehyde.
1050	Crontonic acid.
1060	Cumene.
1070	Cumene hydroperoxide.
1080	Cyanoacetic acid.
1090	Cyanogen chloride.
1100	Cyanuric acid.
1110	Cyanuric chloride.
1120	Cychohexane.
1130	Cyclohexanol.
1140	Cyclohexanone.
1150	Cyclohexene.
1160	Cyclohexylamine.
1170	Cyclooctadiene.
1180	Decanol.
1190	Diacetone alcohol.
1200	Diaminobenzoic acid.
1210	Dichloroaniline.
1215	m-dichlorobenzene.
1216	o-dichlorobenzene.
1220	p-dichlorobenzene.
1221	Dichlorodifluoromethane.
1240	Dichloroethyl ether 1,2-dichloroethane.
1250	Dichlorohydrin
1270	Dichloropropene.
1280	Dicyclohexylamine.
1290	Diethylamine.
1300	Diethylene glycol.
1304	Diethylene glycol diethyl ether.
1305	Diethylene glycol dimethyl ether.
1310	Diethylene glycolmonobutyl ether.
1320	Diethylene glycolmonobutyl ether acetate.
1330	Diethylene glycolmonoethyl ether.
1340	Diethylene glycolmonoethyl ether acetate.
1360	Diethylene glycolmonomethyl ether.
1420	Diethyl sulfate.
1430	Difluoroethane.
1440	Diisobutylene.
1442	Diisodecyl phthalate.
1444	Diisooctyl phthalate.
1450	Diketene.
1460	Dimethylamine.
1470	N,N-dimethylaniline.
1480	N,N-dimethylether.
1490	N,N-dimethylformamide.
1495	Dimethylhydrazine.
1500	Dimethyl sulfate.
1510	Dimethyl sulfide.
1520	Dimethylsulfoxide.
1530	Dimethylterephthalate.
1540	3,5-dinitrobenzoic acid.
1545	Dinitrophenol.
1560	Dioxane.
1570	Dioxolane.
1580	Diphenylamine.
1590	Diphenyl oxide.
1600	Diphenyl thiourea.
1610	Dipropylene glycol.
1620	Dodecene.
1630	Dodecylaniline.
1640	Dodecylphenol.
1650	Epichlorohydrin.
1660	Ethanol.
1661	Ethanolamines.
1670	Ethyl acetate.
1680	Ethyl acetoacetate.
1690	Ethyl acrylate.
1700	Ethylamine.
1710	Ethylbenzene.
1720	Ethyl bromide.
1730	Ethylcellulose.
1740	Ethyl chloride.
1750	Ethyl chloroacetate.
1760	Ethylcyanoacetate.
1770	Ethylene.
1780	Ethylene carbonate.
1790	Ethylene chlorodhydrin.
1800	Ethylenediamine.
1810	Ethylene dibromide.
1830	Ethylene glycol.
1840	Ethylene glycol diacetate.
1870	Ethylene glycol dimethyl ether.
1890	Ethylene glycol monobutyl ether.
1900	Ethylene glycol monobutyl ether acetate.
1910	Ethylene glycol monoethyl ether.
1920	Ethylene glycol monoethyl ether acetate.
1930	Ethylene glycol monoethyl ether.
1940	Ethylene glycol monomethyl ether acetate.
1960	Ethylene glycol monophenyl ether.
1970	Ethylene glycol monopropyl ether.
1980	Ethylene oxide.
1990	Ethyl ether.
2000	2-ethylhexanol.
2010	Ethyl orthoformate.
2020	Ethyl oxalate.
2030	Ethyl sodium oxalacetate.
2040	Formaldehyde.
2050	Formamide.
2060	Formic acid.
2070	Fumaric acid.
2073	Furfural.
2090	Glycerol (Synthetic).
2091	Glycerol dichlorohydrin.
2100	Glycerol triether.
2110	Glycine.
2120	Glyoxal.
2145	Hexachlorobenzene.
2150	Hexachloroethane.
2160	Hexadecyl alcohol.
2165	Hexamethylenediamine.
2170	Hexamethylene glycol.
2180	Hexamethylentetramine.
2190	Hydrogen cyanide.
2200	Hydroquinone.
2210	p-hydroxy-benzoic acid.
2240	Isoamylene.
2250	Isobutanol.
2260	Isobutyl acetate.
2261	Isobutylene.
2270	Isobutyraldehyde.
2280	Isobutyric acid.
2300	Isodecanol.
2320	Isooctyl alcohol.
2321	Isopentane.
2330	Isophorone.
2340	Isophthalic acid.
2350	Isoprene.
2360	Isopropanol.
2370	Isopropyl acetate.
2380	Isopropylamine.
2390	Isopropyl chloride.

OCPDB No.[1]	Chemical
2400	Isopropylphenol.
2410	Ketene.
2414	Linear alkylsulfonate.
2417	Linear alkylbenzene.
2420	Maleic acid.
2430	Maleic anhydride.
2440	Malic acid.
2450	Mesityl oxide.
2455	Metanilic acid.
2460	Methacrylic acid.
2490	Methallyl chloride.
2500	Methanol.
2510	Methyl acetate.
2520	Methyl acetoacetate.
2530	Methylamine.
2540	n-methylaniline.
2545	Methyl bromide.
2550	Methyl butynol.
2560	Methyl chloride.
2570	Methyl cyclohexane.
2590	Methyl cyclohexanone.
2620	Methylene chloride.
2630	Methylene dianiline.
2635	Methylene diphenyl diisocyanate.
2640	Methyl ethyl ketone.
2644	Methyl formate.
2650	Methyl isobutyl carbinol.
2660	Methyl isobutyl ketone.
2665	Methyl methacrylate.
2670	Methyl pentynol.
2690	a-methyl styrene.
2700	Morpholine.
2710	a-napthalene sulfonic acid.
2720	B-napthalene sulfonic acid.
2730	a-naphthol.
2740	B-naphthol.
2750	Neopentanoic acid.
2756	o-nitroaniline.
2757	p-nitroaniline.
2760	o-nitroanisole.
2762	p-nitroanisole.
2770	Nitrobenzene.
2780	Nitrobenzoic acid (o, m & p).
2790	Nitroethane.
2791	Nitromethane.
2792	Nitrophenol.
2795	Nitropropane.
2800	Nitrotoluene.
2810	Nonene.
2820	Nonyl phenol.
2830	Octyl phenol.
2840	Paraldehyde.
2850	Pentaerythritol.
2851	n-pentane.
2855	l-pentene.
2860	Perchloroethylene.
2882	Perchloromethylmercaptan.
2890	o-phenetidine.
2900	p-phenetidine.
2910	Phenol.
2920	Phenolsulfonic acids.
2930	Phenyl anthranilic acid.
2940	Phenylenediamine.
2960	Phthalic anhydride.
2970	Phthalimide.
2973	b-picoline.
2976	Piperazine.
3000	Polybutenes.
3010	Polyethylene glycol.
3025	Polypropylene glycol.
3063	Propionaldehyde.
3066	Propionic acid.
3070	n-propyl alcohol.
3075	Propylamine.
3080	Propyl chloride.
3090	Propylene.
3100	Propylene chlorohydrin.
3110	Propylene dichloride.
3111	Propylene glycol.
3120	Propylene oxide.
3130	Pyridine.
3140	Quinone.
3150	Resorcinol.
3160	Resorcylic acid.
3170	Salicylic acid.
3180	Sodium acetate.
3181	Sodium benzoate.
3190	Sodium carboxymethylcellulose.
3191	Sodium chloroacetate.
3200	Sodium formate.
3210	Sodium phenate.
3220	Sorbic acid.
3230	Styrene.
3240	Succinic acid.
3250	Succinitrile.
3251	Sulfanilic acid.
3260	Sulfolane.
3270	Tannic acid.
3280	Terephthalic acid.
3290 & 3291.	Tetrachloroethanes.
3300	Tetrachlorophthalic anhydride.
3310	Tetraethyllead.
3320	Tetrahydronaphthalene.
3330	Tetrahydrophthalic anhydride.
3335	Tetramethyllead.
3340	Tetramethylenediamine.
3341	Tetramethylethylenediamine.
3349	Toluene.
3350	Toluene-2,4-diamine.
3354	Toluene-2,4-diisocyanate.
3355	Toluene diisocyanates (mixture).
3360	Toluene sulfonamide.
3370	Toluene sulfonic acids.
3380	Toluene sulfonylchloride.
3381	Toluidines.
3393	Trichlorobenzenes.
3395	1,1,1-trichloroethane.
3400	1,1,2-trichloroethane.
3410	Trichloroethylene.
3411	Trichlorofluoromethane.
3420	1,2,3-trichloropropane.
3430	1,1,2-trichloro-1,2,2-trifluoroethane.
3450	Triethylamine.
3460	Triethylene glycol.
3470	Triethylene glycoldimethyl ether.
3480	Triisobutylene.
3490	Trimethylamine.
3510	Vinyl acetate.
3520	Vinyl chloride.
3530	Vinylidene chloride.
3540	Vinyl toluene.
3541	Xylene (mixed).
3560	o-xylene.
3570	p-xylene.
3580	Xylenol.
3590	Xylidine, 1,3-butylene glycol, Dinitrotoluene, Methyltertbutyl ether, Phosgene, Polyethylene, Polypropylene, Polystyrene, Urea.

[1] The OCPDB Numbers are reference indices assigned to the various chemicals in the Organic Chemical Producers Data Base developed by the USEPA.

APPENDIX B—VOM MEASUREMENT TECHNIQUES FOR CAPTURE EFFICIENCY

Procedure G.1—Captured VOC Emissions

1. Introduction

1.1 *Applicability.* This procedure is applicable for determining the volatile organic compounds (VOC) content of captured gas streams. It is intended to be used as a segment in the development of liquid/gas or gas/gas protocols for determining VOC capture efficiency (CE) for surface coating and printing operations. The procedure may not be acceptable in certain site-specific situations, *e.g.,* when: (1) Direct fired heaters or other circumstances affect the quantity of VOC at the control device inlet; and (2) particulate organic aerosols are formed in the process and are present in the captured emissions.

1.2 *Principle.* The amount of VOC captured (G) is calculated as the sum of the products of the VOC content (C_{Gj}), the flow rate (Q_{Gj}), and the sample time (T_C) from each captured emissions point.

1.3 *Estimated measurement uncertainty.* The measurement uncertainties are estimated for each captured or fugitive emissions point as follows: Q_{Gj}=±5.5 percent and C_{Gj}=±5.0 percent. Based on these numbers, the probable uncertainty for G is estimated at about ±7.4 percent.

1.4 *Sampling requirements.* A capture efficiency test shall consist of at least three sampling runs. The sampling time for each run should be at least 8 hours, unless otherwise approved.

1.5 *Notes.* Because this procedure is often applied in highly explosive areas, caution and care should be exercised in choosing appropriate equipment and installing and using the equipment. Mention of trade names or company products does not constitute endorsement. All gas concentrations (percent, ppm) are by volume, unless otherwise noted.

2. Apparatus and Reagents

2.1 *Gas VOC concentration.* A schematic of the measurement system is shown in Figure 1. The main components are described below:

2.1.1 *Sample probe.* Stainless steel, or equivalent. The probe shall be heated to prevent VOC condensation.

2.1.2 *Calibration valve assembly.* Three-way valve assembly at the outlet of sample probe to direct the zero and calibration gases to the analyzer. Other methods, such as quick-connect lines, to route calibration gases to the outlet of the sample probe are acceptable.

2.1.3 *Sample line.* Stainless steel or Teflon tubing to transport the sample gas to the analyzer. The sample line must be heated to prevent condensation.

2.1.4 *Sample pump.* A lead-free pump, to pull the sample gas through the system at a flow rate sufficient to minimize the response time of the measurement system. The components of the pump that contact the gas stream shall be constructed of stainless steel or Teflon. The sample pump must be heated to prevent condensation.

2.1.5 *Sample flow rate control.* A sample flow rate control valve and rotameter, or equivalent, to maintain a constant sampling rate within 10 percent. The flow rate control valve and rotameter must be heated to prevent condensation. A control valve may also be located on the sample pump bypass loop to assist in controlling the sample pressure and flow rate.

2.1.6 *Sample gas manifold.* Capable of diverting a portion of the sample gas stream to the flame ionization analyzer (FIA), and the remainder to the bypass discharge vent. The manifold components shall be constructed of stainless steel or Teflon. If captured or fugitive emissions are to be measured at multiple locations, the measurement system shall be designed to use separate sampling probes, lines, and pumps for each measurement location and a common sample gas manifold and FIA. The sample gas manifold and connecting lines to the FIA must be heated to prevent condensation.

2.1.7 *Organic concentration analyzer.* An FIA with a span value of 1.5 times the expected concentration as propane; however, other span values may be used if it can be demonstrated that they would provide more accurate measurements.

The system shall be capable of meeting or exceeding the following specifications:

2.1.7.1 *Zero drift.* Less than ±3.0 percent of the span value.

2.1.7.2 *Calibration drift.* Less than ±3.0 percent of the span value.

2.1.7.3 *Calibration error.* Less than ±5.0 percent of the calibration gas value.

2.1.7.4 *Response time.* Less than 30 seconds.

2.1.8 *Integrator/data acquisition system.* An analog or digital device or computerized data acquisition system used to integrate the FIA response or compute the average response and record measurement data. The minimum data sampling frequency for computing average or integrated values is one measurement value every 5 seconds. The device shall be capable of recording average values at least once per minute.

2.1.9 *Calibration and other gases.* Gases used for calibration, fuel, and combustion air (if required) are contained in compressed gas cylinders. All calibration gases shall be traceable to NIST standards and shall be certified by the manufacturer to ±1 percent of the tag value. Additionally, the manufacturer of the cylinder should provide a recommended shelf life for each calibration gas cylinder over which the concentration does not change more than ±2 percent from the certified value. For calibration gas values not generally available, alternative methods

for preparing calibration gas mixtures, such as dilution systems, may be used with prior approval.

2.1.9.1 *Fuel.* A 40 percent H_2/60 percent He or 40 percent H_2/60 percent N_2 gas mixture is recommended to avoid an oxygen synergism effect that reportedly occurs when oxygen concentration varies significantly from a mean value.

2.1.9.2 *Carrier gas.* High purity air with less than 1 ppm of organic material (as propane or carbon equivalent) or less than 0.1 percent of the span value, whichever is greater.

2.1.9.3 *FIA Linearity calibration gases.* Low-, mid-, and high-range gas mixture standards with nominal propane concentrations of 20–30, 45–55, and 70–80 percent of the span value in air, respectively. Other calibration values and other span values may be used if it can be shown that more accurate measurements would be achieved.

2.1.10 *Particulate filter.* An in-stack or an out-of-stack glass fiber filter is recommended if exhaust gas particulate loading is significant. An out-of-stack filter must be heated to prevent any condensation unless it can be demonstrated that no condensation occurs.

2.2 *Captured emissions volumetric flow rate.*

2.2.1 *Method 2 or 2A apparatus.* For determining volumetric flow rate.

2.2.2 *Method 3 apparatus and reagents.* For determining molecular weight of the gas stream. An estimate of the molecular weight of the gas stream may be used if it can be justified.

2.2.3 *Method 4 apparatus and reagents.* For determining moisture content, if necessary.

3. Determinations of Volumetric Flow Rate of Captured Emissions

3.1 Locate all points where emissions are captured from the affected facility. Using Method 1, determine the sampling points. Be sure to check each site for cyclonic or swirling flow.

3.2 Measure the velocity at each sampling site at least once every hour during each sampling run using Method 2 or 2A.

4. Determinations of VOC Content of Captured Emissions

4.1 *Analysis duration.* Measure the VOC responses at each captured emissions point during the entire test run or, if applicable, while the process is operating. If there are multiple captured emission locations, design a sampling system to allow a single FIA to be used to determine the VOC responses at all sampling locations.

4.2 *Gas VOC concentration.*

4.2.1 Assemble the sample train as shown in Figure 1. Calibrate the FIA according to the procedure in section 5.1.

4.2.2 Conduct a system check according to the procedure in section 5.3.

4.2.3 Install the sample probe so that the probe is centrally located in the stack, pipe, or duct, and is sealed tightly at the stack port connection.

4.2.4 Inject zero gas at the calibration valve assembly. Allow the measurement system response to reach zero. Measure the system response time as the time required for the system to reach the effluent concentration after the calibration valve has been returned to the effluent sampling position.

4.2.5 Conduct a system check before and a system check after each sampling run according to the procedures in sections 5.2 and 5.3. If the drift check following a run indicates unacceptable performance, the run is not valid. The tester may elect to perform system drift checks during the run not to exceed one drift check per hour.

4.2.6 Verify that the sample lines, filter, and pump temperatures are 120±5°C.

4.2.7 Begin sampling at the start of the test period and continue to sample during the entire run. Record the starting and ending times and any required process information as appropriate. If multiple captured emission locations are sampled using a single FIA, sample at each location for the same amount of time (*e.g.,* 2 minutes) and continue to switch from one location to another for the entire test run. Be sure that total sampling time at each location is the same at the end of the test run. Collect at least 4 separate measurements from each sample point during each hour of testing. Disregard the measurements at each sampling location until two times the response time of the measurement system has elapsed. Continue sampling for at least 1 minute and record the concentration measurements.

4.3 *Background concentration.*

4.3.1 Locate all NDO's of the TTE. A sampling point shall be centrally located outside of the TTE at 4 equivalent diameters from each NDO, if possible. If there are more than 6 NDO's, choose 6 sampling points evenly spaced among the NDO's.

4.3.2 Assemble the sample train as shown in Figure 2. Calibrate the FIA and conduct a system check according to the procedures in sections 5.1 and 5.3.

NOTE: This sample train shall be a separate sampling train from the one to measure the captured emissions.

4.3.3 Position the probe at the sampling location.

4.3.4 Determine the response time, conduct the system check and sample according to the procedures described in sections 4.2.4 to 4.2.7.

4.4 *Alternative procedure.* The direct interface sampling and analysis procedure described in section 7.2 of Method 18 may be

used to determine the gas VOC concentration. The system must be designed to collect and analyze at least one sample every 10 minutes.

5. Calibration and Quality Assurance

5.1 *FIA calibration and linearity check.* Make necessary adjustments to the air and fuel supplies for the FIA and ignite the burner. Allow the FIA to warm up for the period recommended by the manufacturer. Inject a calibration gas into the measurement system and adjust the back-pressure regulator to the value required to achieve the flow rates specified by the manufacturer. Inject the zero- and the high-range calibration gases and adjust the analyzer calibration to provide the proper responses. Inject the low- and mid-range gases and record the responses of the measurement system. The calibration and linearity of the system are acceptable if the responses for all four gases are within 5 percent of the respective gas values. If the performance of the system is not acceptable, repair or adjust the system and repeat the linearity check. Conduct a calibration and linearity check after assembling the analysis system and after a major change is made to the system.

5.2 *Systems drift checks.* Select the calibration gas that most closely approximates the concentration of the captured emissions for conducting the drift checks. Introduce the zero and calibration gas at the calibration valve assembly and verify that the appropriate gas flow rate and pressure are present at the FIA. Record the measurement system responses to the zero and calibration gases. The performance of the system is acceptable if the difference between the drift check measurement and the value obtained in section 5.1 is less than 3 percent of the span value. Conduct the system drift checks at the end of each run.

5.3 *System check.* Inject the high range calibration gas at the inlet to the sampling probe while the dilution air is turned off. Record the response. The performance of the system is acceptable if the measurement system response is within 5 percent of the value obtained in section 5.1 for the high range calibration gas. Conduct a system check before and after each test run.

5.4 *Analysis audit.* Immediately before each test analyze an audit cylinder as described in section 5.2. The analysis audit must agree with the audit cylinder concentration within 10 percent.

6. Nomenclature

A_i=area of NDO i, ft^2.

A_N=total area of all NDO's in the enclosure, ft^2.

C_{Bi}=corrected average VOC concentration of background emissions at point i, ppm propane.

C_B=average background concentration, ppm propane.

C_{Gj}=corrected average VOC concentration of captured emissions at point j, ppm propane.

C_{DH}=average measured concentration for the drift check calibration gas, ppm propane.

C_{DO}=average system drift check concentration for zero concentration gas, ppm propane.

C_H=actual concentration of the drift check calibration gas, ppm propane.

C_i=uncorrected average background VOC concentration measured at point i, ppm propane.

C_j=uncorrected average VOC concentration measured at point j, ppm propane.

G=total VOC content of captured emissions, kg.

K_1=1.830×10^{-6} kg/ (m^3-ppm).

n=number of measurement points.

Q_{Gj}=average effluent volumetric flow rate corrected to standard conditions at captured emissions point j, m^3/min.

T_C=total duration of captured emissions sampling run, min.

7. Calculations

7.1 *Total VOC captured emissions.*

$$G = \sum_{j=1}^{n} (C_{Gj} - C_B)\, Q_{Gj}\, T_C\, K_1 \qquad \text{Eq. 1}$$

7.2 *VOC concentration of the captured emissions at point j.*

$$C_{Gj} = (C_j - C_{DO}) \frac{C_H}{C_{DH} - C_{DO}} \qquad \text{Eq. 2}$$

7.3. *Background VOC concentration at point i.*

$$C_{Bi} = (C_i - C_{DO}) \frac{C_H}{C_{DH} - C_{DO}} \qquad \text{Eq. 3}$$

7.4 *Average background concentration.*

$$C_B = \frac{\sum_{i=1}^{n} C_{Bi} A_i}{n A_N} \qquad \text{Eq. 4}$$

NOTE: If the concentration at each point is with in 20 percent of the average concentration of all points, the terms ''A_i'' and ''A_N'' may be deleted from Equation 4.

Procedure G.2—Captured VOC Emissions (Dilution Technique)

1. Introduction

1.1 *Applicability.* This procedure is applicable for determining the volatile organic compounds (VOC) content of captured gas streams. It is intended to be used as a segment in the development of a gas/gas protocol in which fugitive emissions are measured for determining VOC capture efficiency (CE) for surface coating and printing operations. A dilution system is used to reduce the VOC concentration of the captured emission to about the same concentration as the fugitive emission. The procedure may not be acceptable in certain site-specific situations, *e.g.*, when: (1) Direct fired heaters or other circumstances affect the quantity of VOC at the control device inlet; and (2) particulate organic aerosols are formed in the process and are present in the captured emissions.

1.2 *Principle.* The amount of VOC captured (G) is calculated as the sum of the products of the VOC content (C_{Gj}), the flow rate (Q_{Gj}), and the sampling time (T_C) from each captured emissions point.

1.3 *Estimated measurement uncertainty.* The measurement uncertainties are estimated for each captured or fugitive emissions point as follows: O_{Gj}=±5.5 percent and C_{Gj}=±5 percent. Based on these numbers, the probable uncertainty for G is estimated at about ±7.4 percent.

1.4 *Sampling requirements.* A capture efficiency test shall consist of at least three sampling runs. The sampling time for each run should be at least 8 hours, unless otherwise approved.

1.5 *Notes.* Because this procedure is often applied in highly explosive areas, caution and care should be exercised in choosing appropriate equipment and installing and using the equipment. Mention of trade names or company products does not constitute endorsement. All gas concentrations (percent, ppm) are by volume, unless otherwise noted.

2. Apparatus and Reagents

2.1 *Gas VOC concentration.* A schematic of the measurement system is shown in Figure 1. The main components are described below:

2.1.1 *Dilution system.* A Kipp in-stack dilution probe and controller or similar device may be used. The dilution rate may be changed by substituting different critical orifices or adjustments of the aspirator supply pressure. The dilution system shall be heated to prevent VOC condensation.

NOTE: An out-of-stack dilution device may be used.

2.1.2 *Calibration valve assembly.* Three-way valve assembly at the outlet of sample probe to direct the zero and calibration gases to the analyzer. Other methods, such as quick-connect lines, to route calibration gases to the outlet of the sample probe are acceptable.

2.1.3 *Sample line.* Stainless steel or Teflon tubing to transport the sample gas to the analyzer. The sample line must be heated to prevent condensation.

2.1.4 *Sample pump.* A leak-free pump, to pull the sample gas through the system at a flow rate sufficient to minimize the response time of the measurement system. The components of the pump that contract the gas stream shall be constructed of stainless steel or Teflon. The sample pump must be heated to prevent condensation.

2.1.5 *Sample flow rate control.* A sample flow rate control valve and rotameter, or equivalent, to maintain a constant sampling rate within 10 percent. The flow control valve and rotameter must be heated to prevent condensation. A control valve may also be located on the sample pump bypass loop to assist in controlling the sample pressure and flow rate.

2.1.6 *Sample gas manifold.* Capable of diverting a portion of the sample gas stream to the flame ionization analyzer (FIA), and the remainder to the bypass discharge vent. The manifold components shall be constructed of stainless steel or Teflon. If captured or fugitive emissions are to be measured at multiple locations, the measurement system shall be designed to use separate sampling probes, lines, and pumps for each measurement location and a common sample gas manifold and FIA. The sample gas manifold and connecting lines to the FIA must be heated to prevent condensation.

2.1.7 *Organic concentration analyzer.* An FIA with a span value of 1.5 times the expected concentration as propane; however, other span values may be used if it can be demonstrated that they would provide more accurate measurements.

The system shall be capable of meeting or exceeding the following specifications:

2.1.7.1 *Zero drift.* Less than ±3.0 percent of the span value.

2.1.7.2 *Calibration drift.* Less than ±3.0 percent of the span value.

2.1.7.3 *Calibration error.* Less than ±5.0 percent of the calibration gas value.

2.1.7.4 *Response time.* Less than 30 seconds.

2.1.7.8 *Integrator/data acquisition system.* An analog or digital device or computerized data acquisition system used to integrate the FIA response or compute the average response and record measurement data. The minimum data sampling frequency for computing average or integrated values is one measurement value every 5 seconds. The device shall be capable of recording average values at least once per minute.

2.1.9 *Calibration and other gases.* Gases used for calibration, fuel, and combustion air (if required) are contained in compressed gas cylinders. All calibration gases shall be

traceable to NIST standards and shall be certified by the manufacturer to ±1 percent of the tag value. Additionally, the manufacturer of the cylinder should provide a recommended shelf life for each calibration gas cylinder over which the concentration does not change more than ±2 percent from the certified value. For calibration gas values not generally available, alternative methods for preparing calibration gas mixtures, such as dilution system, may be used with prior approval.

2.1.9.1 *Fuel.* A 40 percent H_2/60 percent He or 40 percent H_2/60 percent N_2 gas mixture is recommended to avoid an oxygen synergism effect that reportedly occurs when oxygen concentration varies signficantly from a mean value.

2.1.9.2. *Carrier gas and dilution air supply.* High purity air with less than 1 ppm of organic material (as propane or carbon equivalent) or less than 0.1 percent of the span value, whichever is greater.

2.1.9.3 *FIA linearity calibration gases.* Low-, mid-, and high-range gas mixture standards with nominal propane concentrations of 20–30, 45–55, and 70–80 percent of the span value in air, respectively. Other calibration values and other span values may be used if it can be shown that more accurate measurements would be achieved.

2.1.9.4 *Dilution check gas.* Gas mixture standard containing propane in air, approximately half the span value after dilution.

2.1.10 *Particulate filter.* An in-stack or an out-of-stack glass fiber filter is recommended if exhaust gas particulate loading is significant. An out-of-stack filter must be heated to prevent any condensation unless it can be demonstrated that no condensation occurs.

2.2 *Captured emissions volumetric flow rate.*

2.2.1 *Method 2 or 2A apparatus.* For determining volumetric flow rate.

2.2.2 *Method 3 apparatus and reagents.* For determining molecular weight of the gas stream. An estimate of the molecular weight of the gas stream may be used if it can be justified.

2.2.3 *Method 4 apparatus and reagents.* For determining moisture content, if necessary.

3. Determination of Volumetric Flow Rate of Captured Emissions

3.1 Locate all points where emissions are captured from the affected facility. Using Method 1, determine the sampling points. Be sure to check each site for cyclonic or swirling flow.

3.2 Measure the velocity at each sampling site at least once every hour during each sampling run using Method 2 or 2A.

4. Determination of VOC Content of Captured Emissions

4.1 *Analysis duration.* Measure the VOC responses at each captured emissions point during the entire test run or, if applicable, while the process is operating. If there are multiple captured emissions locations, design a sampling system to allow a single FIA to be used to determine the VOC responses at all sampling locations.

4.2 *Gas VOC concentration.*

4.2.1 Assemble the sample train as shown in Figure 1. Calibrate the FIA according to the procedure in section 5.1.

4.2.2 Set the dilution ratio and determine the dilution factor according to the procedure in section 5.3.

4.2.3 Conduct a system check according to the procedure in section 5.4.

4.2.4 Install the sample probe so that the probe is centrally located in the stack, pipe, or duct, and is sealed tightly at the stack port connection.

4.2.5 Inject zero gas at the calibration valve assembly. Measure the system response time as the time required for the system to reach the effluent concentration after the calibration valve has been returned to the effluent sampling position.

4.2.6 Conduct a system check before and a system drift check after each sampling run according to the procedures in sections 5.2 and 5.4. If the drift check following a run indicates unacceptable performance, the run is not valid. The tester may elect to perform system drift checks during the run not to exceed one drift check per hour.

4.2.7 Verify that the sample lines, filter, and pump temperatures are 120±5°C.

4.2.8 Begin sampling at the start of the test period and continue to sample during the entire run. Record the starting and ending times and any required process information as appropriate. If multiple captured emission locations are sampled using a single FIA, sample at each location for the same amount of time (*e.g.*, 2 minutes) and continue to switch from one location to another for the entire test run. Be sure that total sampling time at each location is the same at the end of the test run. Collect at least 4 separate measurements from each sample point during each hour of testing. Disregard the measurements at each sampling location until two times the response time of the measurement system has elapsed. Continue sampling for at least 1 minute and record the concentration measurements.

4.3 *Background concentration.*

4.3.1 Locate all NDO's of the TTE. A sampling point shall be centrally located outside of the TTE at 4 equivalent diameters from each NDO, if possible. If there are more than 6 NDO's, choose 6 sampling points evenly spaced among the NDO's.

4.3.2 Assemble the sample train as shown in Figure 2. Calibrate the FIA and conduct a system check according to the procedures in sections 5.1 and 5.4.

4.3.3 Position the probe at the sampling location.

4.3.4 Determine the response time, conduct the system check and sample according to the procedures described in sections 4.2.4 to 4.2.8.

4.4 *Alternative procedure.* The direct interface sampling and analysis procedure described in section 7.2 of Method 18 may be used to determine the gas VOC concentration. The system must be designed to collect and analyze at least one sample every 10 minutes.

5. Calibration and Quality Assurance

5.1 *FIA Calibration and linearity check.* Make necessary adjustments to the air and fuel supplies for the FIA and ignite the burner. Allow the FIA to warm up for the period recommended by the manufacturer. Inject a calibration gas into the measurement system after the dilution system and adjust the back-pressure regulator to the value required to achieve the flow rates specified by the manufacturer. Inject the zero- and the high-range calibration gases and adjust the analyzer calibration to provide the proper responses. Inject the low- and mid-range gases and record the responses of the measurement system. The calibration and linearity of the system are acceptable if the responses for all four gases are within 5 percent of the respective gas values. If the performance of the system is not acceptable, repair or adjust the system and repeat the linearity check. Conduct a calibration and linearity check after assembling the analysis system and after a major change is made to the system.

5.2 *Systems drift checks.* Select the calibration gas that most closely approximates the concentration of the diluted captured emissions for conducting the drift checks. Introduce the zero and calibration gas at the calibration valve assembly and verify that the appropriate gas flow rate and pressure are present at the FIA. Record the measurement system responses to the zero and calibration gases. The performance of the system is acceptable if the difference between the drift check measurement and the value obtained in section 5.1 is less than 3 percent of the span value. Conduct the system drift check at the end of each run.

5.3 *Determination of dilution factor.* Inject the dilution check gas into the measurement system before the dilution system and record the response. Calculate the dilution factor using Equation 3.

5.4 *System check.* Inject the high range calibration gas at the inlet to the sampling probe while the dilution air is turned off. Record the response. The performance of the system is acceptable if the measurement system response is within 5 percent of the value obtained in section 5.1 for the high range calibration gas. Conduct a system check before and after each test run.

5.5 *Analysis audit.* Immediately before each test analyze an audit cylinder as described in section 5.2. The analysis audit must agree with the audit cylinder concentration within 10 percent.

6. Nomenclature

A_i=area of NDO i, ft^2.

A_N=total area of all NDO's in the enclosure, ft^2.

C_A=actual concentration of the dilution check gas, ppm propane.

C_{Bi}=corrected average VOC concentration of background emissions at point i, ppm propane.

C_B=average background concentration, ppm propane.

C_{DH}=average measured concentration for the drift check calibration gas, ppm propane.

C_{DO}=average system drift check concentration for zero concentration gas, ppm propane.

C_H=actual concentration of the drift check calibration, gas, ppm propane.

C_i=uncorrected average background VOC concentration measured at point i, ppm propane.

C_j=uncorrected average VOC concentration measured at point j, ppm propane.

C_M=measured concentration of the dilution check gas, ppm propane.

D_F=dilution factor.

G=total VOC content of captured emissions, kg.

$K_1=1.830 \times 10^{-6}$ kg/(m^3-ppm).

n=number of measurement points.

Q_{Gj}=average effluent volumetric flow rate corrected to standard conditions at captured emissions point j, m^3/min.

T_C=total duration of capture efficiency sampling run, min.

7. Calculations

7.1 *Total VOC captured emissions.*

$$G = \sum_{j=1}^{n} C_{Gj}\, Q_{Gj}\, T_C\, K_1 \qquad \text{Eq. 1}$$

7.2 *VOC concentration of the captured emissions to point j.*

$$C_{Gj} = DF(C_j + - C_{DO}) \frac{C_H}{C_{DH} - C_{DO}} \qquad \text{Eq. 2}$$

7.3 *Dilution factor.*

$$DF = \frac{C_A}{C_M} \qquad \text{Eq. 3}$$

7.4 *Background VOC concentration at point i.*

$$C_{Bi} = (C_i - C_{DO}) \frac{C_H}{C_{DH} - C_{DO}} \qquad \text{Eq. 4}$$

7.5 *Average background concentration.*

$$C_B = \frac{\sum_{i=1}^{n} C_{Bi} \; A_i}{n \; A_N} \qquad \text{Eq. 5}$$

NOTE: If the concentration at each point is within 20 percent of the average concentration of all points, the terms ''A_i'' and ''A_N'' may be deleted from Equation 4.

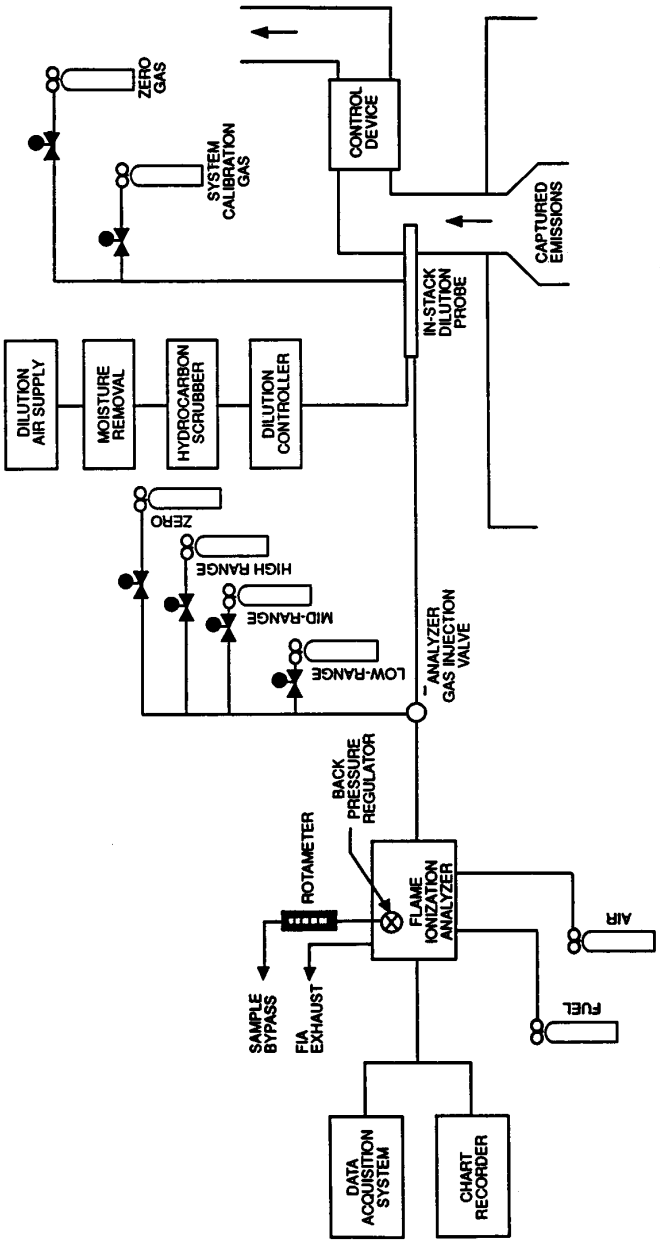

Figure 1. Captured emissions measurement system.

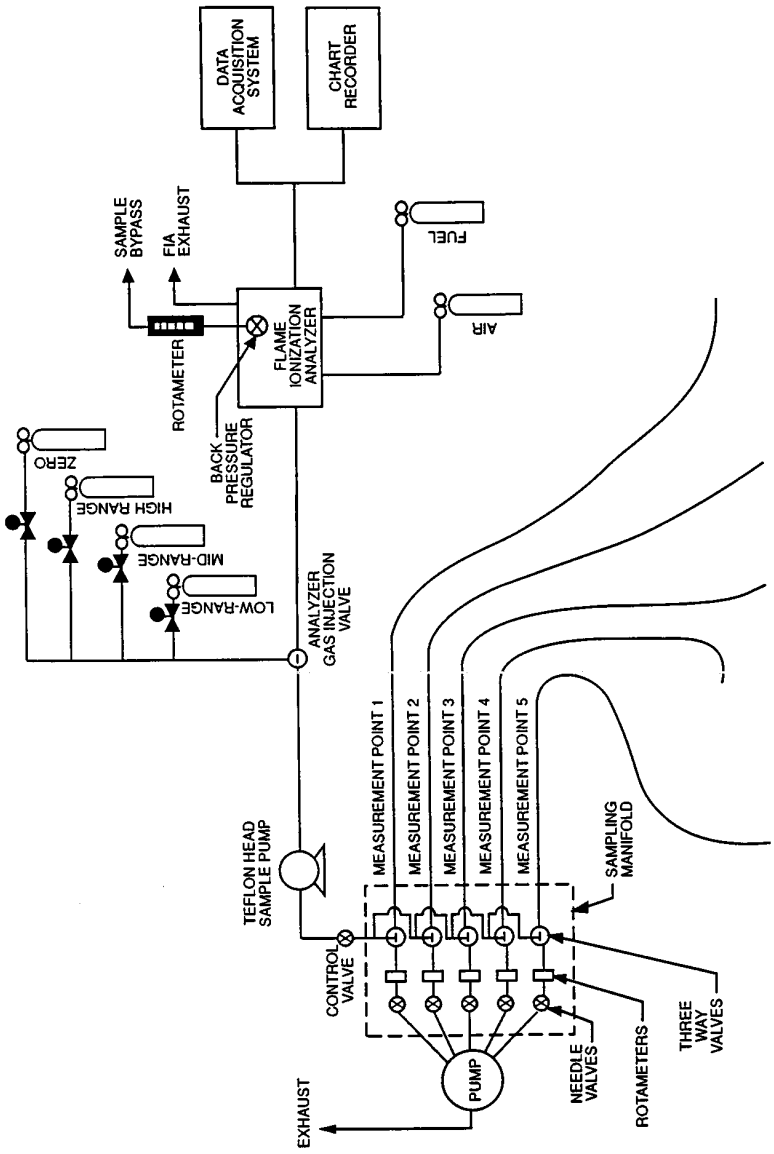

Figure 2. Background measurement system.

VOC 2/90

Procedure F.2—Fugitive VOC Emissions from Building Enclosures

1. Introduction

1.1 *Applicability.* This procedure is applicable for determining the fugitive volatile organic compounds (VOC) emissions from a building enclosure (BE). It is intended to be used as a segment in the development of liquid/gas or gas/gas protocols for determining VOC capture efficiency (CE) for surface coating and printing operations.

1.2 *Principle.* The total amount of fugitive VOC emissions (F_B) from the BE is calculated as the sum of the products of the VOC content (C_{Fj}) of each fugitive emissions point, its flow rate (Q_{Fj}), and time (T_F).

1.3 *Measurement uncertainty.* The measurement uncertainties are estimated for each fugitive emissions point as follows: Q_{Fj}=±5.0 percent and C_{Fj}=±5.0 percent. Based on these numbers, the probable uncertainty for F_B is estimated at about ±11.2 percent.

1.4 *Sampling requirements.* A capture efficiency test shall consist of at least three sampling runs. The sampling time for each run should be at least 8 hours, unless otherwise approved.

1.5 *Notes.* Because this procedure is often applied in highly explosive areas, caution and care should be exercised in choosing appropriate equipment and installing and using the equipment. Mention of trade names or company products does not constitute endorsement. All gas concentrations (percent, ppm) are by volume, unless otherwise noted.

2. Apparatus and Reagents

2.1 *Gas VOC concentration.* A schematic of the measurement system is shown in Figure 1. The main components are described below:

2.1.1 *Sample probe.* Stainless steel, or equivalent. The probe shall be heated to prevent VOC condensation.

2.1.2 *Calibration valve assembly.* Three-way valve assembly at the outlet of sample probe to direct the zero and calibration gases to the analyzer. Other methods, such as quick-connect lines, to route calibration gases to the outlet of the sample probe are acceptable.

2.1.3 *Sample line.* Stainless steel or Teflon tubing to transport the sample gas to the analyzer. The sample line must be heated to prevent condensation.

2.1.4 *Sample pump.* A leak-free pump, to pull the sample gas through the system at a flow rate sufficient to minimize the response time of the measurement system. The components of the pump that contact the gas stream shall be constructed of staimust be heated to prevent condensation.

2.1.5 *Sample flow rate control.* A sample flow rate control valve and rotameter, or equivalent, to maintain a constant sampling rate within 10 percent. The flow rate control valve and rotameter must be heated to prevent condensation. A control valve may also be located on the sample pump bypass loop to assist in controlling the sample pressure and flow rate.

2.1.6 *Sample gas manifold.* Capable of diverting a portion of the sample gas stream to the flame ionization analyzer (FIA), and the remainder to the bypass discharge vent. The manifold components shall be constructed of stainless steel or Teflon. If emissions are to be measured at multiple locations, the measurement system shall be designed to use separate sampling probes, lines, and pumps for each measurement location and a common sample gas manifold and FIA. The sample gas manifold must be heated to prevent condensation.

2.1.7 *Organic Concentration Analyzer.* An FIA with a span value of 1.5 times the expected concentration as propane; however, other span values may be used if it can be demonstrated that they would provide more accurate measurements. The system shall be capable or exceeding the following specifications:

2.1.7.1 *Zero drift.* Less than ±3.0 percent of the span value.

2.1.7.2 *Calibration drift.* Less than ±3.0 percent of the span value.

2.1.7.3 *Calibration error.* Less than ±5.0 percent of the calibration gas value.

2.1.7.4 *Response time.* Less than 30 seconds.

2.1.8 *Integrator/data acquisition system.* An analog or digital device or computerized data acquisition system used to integrate the FIA response or compute the average response and record measurement data. The minimum data sampling frequency for computing average or integrated values is one measurement value every 5 seconds. The device shall be capable of recording average values at least once per minute.

2.1.9 *Calibration and other gases.* Gases used for calibration, fuel, and combustion air (if required) are contained in compressed gas cylinders. All calibration gases shall be traceable to NIST standards and shall be certified by the manufacturer to ±1 percent of the tag value. Additionally, the manufacturer of the cylinder should provide a recommended shelf life for each calibration gas cylinder over which the concentration does not change more than ±2 percent from the certified value. For calibration gas values not generally available, alternative methods for preparing calibration gas mixtures, such as dilution systems, may be used with prior approval.

2.1.9.1 *Fuel.* A 40 percent H_2/60 percent He or 40 percent H_2/60 percent N_2 gas mixture is recommended to avoid an oxygen synergism effect that reportedly occurs when oxygen concentration varies significantly from a mean value.

2.1.9.2 *Carrier gas.* High purity air with less than 1 ppm of organic material (propane

or carbon equivalent) or less than 0.1 percent of the span value, whichever is greater.

2.1.9.3 *FIA linearity calibration gases.* Low-, mid-, and high-range gas mixture standards with nominal propane concentrations of 20–30, 45–55, and 70–80 percent of the span value in air, respectively. Other calibration values and other span values may be used if it can be shown that more accurate measurements would be achieved.

2.1.10 *Particulate filter.* An in-stack or an out-of-stack glass fiber filter is recommended if exhaust gas particulate loading is significant. An out-of-stack filter must be heated to prevent any condensation unless it can be demonstrated that no condensation occurs.

2.2 *Fugitive emissions volumetric flow rate.*

2.2.1 *Flow direction indicators.* Any means of indicating inward or outward flow, such as light plastic film or paper streamers, smoke tubes, filaments, and sensory perception.

2.2.2 *Method 2 or 2A apparatus.* For determining volumetric flow rate. Anemometers or similar devices calibrated according to the manufacturer's instructions may be used when low velocities are present. Vane anemometers (Young-maximum response propeller), specialized pitots with electronic manometers (*e.g.,* Shortridge Instruments Inc., Airdata Multimeter 860) are commercially available with measurement thresholds of 15 and 8 mpm (50 and 25 fpm), respectively.

2.2.3 *Method 3 apparatus and reagents.* For determining molecular weight of the gas stream. An estimate of the molecular weight of the gas stream may be used if it can be justified.

2.2.4 *Method 4 apparatus and reagents.* For determining moisture content, if necessary.

3. Determination of Volumetric Flow Rate of Fugitive Emissions

3.1 *Preliminary determinations.* The purpose of this exercise is to determine which exhaust points should be measured for volumetric flow rates and VOC concentrations.

3.1.1 *Forced draft openings.* Identify all forced draft openings. Determine the volumetric flow rate according to Method 2.

3.1.2 *NDO's exhaust points.* The NDO's in the roof of a facility are considered to be exhaust points. Determine volumetric flow rate from these NDO's. Divide the cross-sectional area according to Method 1 using 12 equal areas. Use the appropriate velocity measurement devices, *e.g.,* propeller anemometers.

3.1.3 *Other NDO's.*

3.1.3.1 This step is optional. Determine the exhaust flow rate, including that of the control device, from the enclosure and the intake air flow rate. If the exhaust flow rate divided by the intake air flow rate is greater than 1.1, then all other NDO's are not considered to be significant exhaust points.

3.1.3.2 If the option above is not taken, identify all other NDO's and other potential points through which fugitive emissions may escape the enclosure. Then use the following criteria to determine whether flow rates and VOC concentrations need to be measured:

3.1.3.2.1 Using the appropriate flow direction indicator, determine the flow direction. An NDO with zero or inward flow is not an exhaust point.

3.1.3.2.2 Measure the outward volumetric flow rate from the remainder of the NDO's. If the collective flow rate is 2 percent, or less, of the flow rate from sections 3.1.1 and 3.1.2, then these NDO's, except those within two equivalent diameters (based on NDO opening) from VOC sources, may be considered to be non-exhaust points.

3.1.3.2.3 If the percentage calculated in section 3.1.3.2.2 is greater than 2 percent, those NDO's (except those within two equivalent diameters from VOC sources) whose volumetric flow rate totals 2 percent of the flow rate from sections 3.1.1 and 3.1.2 may be considered as non-exhaust points. All remaining NDO's shall be measured for volumetric flow rate and VOC concentrations during the CE test.

3.1.3.2.4 The tester may choose to measure VOC concentrations at the forced exhaust points and the NDO's. If the total VOC emissions from the NDO's are less than 2 percent of the emissions from the forced draft and roof NDO's, then these NDO's may be eliminated from further consideration.

3.2 *Determination of flow rates.*

3.2.1 Measure the volumetric flow rate at all locations identified as exhaust points in section 3.1. Divide each exhaust opening into 9 equal areas for rectangular openings and 8 for circular openings.

3.2.2 Measure the velocity at each site at least once every hour during each sampling run using Method 2 or 2A, if applicable, or using the low velocity instruments in section 2.2.2.

4. Determination of VOC Content of Fugitive Emissions

4.1 *Analysis duration.* Measure the VOC responses at each fugitive emission point during the entire test run or, if applicable, while the process is operating. If there are multiple emissions locations, design a sampling system to allow a single FIA to be used to determine the VOC responses at all sampling locations.

4.2 Gas VOC concentration.

4.2.1 Assemble the sample train as shown in Figure 1. Calibrate the FIA and conduct a system check according to the procedures in sections 5.1 and 5.3, respectively.

4.2.2 Install the sample probe so that the probe is centrally located in the stack, pipe, or duct, and is sealed tightly at the stack port connection.

4.2.3 Inject zero gas at the calibration valve assembly. Allow the measurement system response to reach zero. Measure the system response time as the time required for the system to reach the effluent concentration after the calibration valve has been returned to the effluent sampling position.

4.2.4 Conduct a system check before and a system drift check after each sampling run according to the procedures in sections 5.2 and 5.3. If the drift check following a run indicates unacceptable performance, the run is not valid. The tester may elect to perform drift checks during the run not to exceed one drift check per hour.

4.2.5 Verify that the sample lines, filter, and pump temperatures are 120±5°C.

4.2.6 Begin sampling at the start of the test period and continue to sample during the entire run. Record the starting and ending times and any required process information as appropriate. If multiple emission locations are sampled using a single FIA, sample at each location for the same amount of time (*e.g.*, 2 minutes) and continue to switch from one location to another for the entire test run. Be sure that total sampling time at each location is the same at the end of the test run. Collect at least 4 separate measurements from each sample point during each hour of testing. Disregard the response measurements at each sampling location until two times the response time of the measurement system has elapsed. Continue sampling for at least 1 minute and record the concentration measurements.

4.3 *Alternative procedure.* The direct interface sampling and analysis procedure described in section 7.2 of Method 18 may be used to determine the gas VOC concentration. The system must be designed to collect and analyze at least one sample every 10 minutes.

5. Calibration and Quality Assurance

5.1 *FIA calibration and linearity check.* Make necessary adjustments to the air and fuel supplies for the FIA and ignite the burner. Allow the FIA to warm up for the period recommended by the manufacturer. Inject a calibration gas into the measurement system and adjust the back-pressure regulator to the value required to achieve the flow rates specified by the manufacturer. Inject the zero- and the high-range calibration gases and adjust the analyzer calibration to provide the proper responses. Inject the low- and mid-range gases and record the responses of the measurement system. The calibration and linearity of the system are acceptable if the responses for all four gases are within 5 percent of the respective gas values. If the performance of the system is not acceptable, repair or adjust the system and repeat the linearity check. Conduct a calibration and linearity check after assembling the analysis system and after a major change is made to the system.

5.2 *Systems drift checks.* Select the calibration gas that most closely approximates the concentration of the captured emissions for conducting the drift checks. Introduce the zero and calibration gas at the calibration valve assembly and verify that the appropriate gas flow rate and pressure are present at the FIA. Record the measurement system responses to the zero and calibration gases. The performance of the system is acceptable if the difference between the drift check measurement and the value obtained in section 5.1 is less than 3 percent of the span value. Conduct a system drift check at the end of each run.

5.3 *System check.* Inject the high range calibration gas at the inlet of the sampling probe and record the response. The performance of the system is acceptable if the measurement system response is within 5 percent of the value obtained in section 5.1 for the high range calibration gas. Conduct a system check before each test run.

5.4 *Analysis audit.* Immediately before each test analyze an audit cylinder as described in section 5.2. The analysis audit must agree with the audit cylinder concentration within 10 percent.

6. Nomenclature

C_{DH}=average measured concentration for the drift check calibration gas, ppm propane.

C_{DO}=average system drift check concentration for zero concentration gas, ppm propane.

C_{Fj}=corrected average VOC concentration of fugitive emissions at point j, ppm propane.

C_H=actual concentration of the drift check calibration gas, ppm propane.

C_j=uncorrected average VOC concentration measured at point j, ppm propane.

F_B=total VOC content of fugitive emissions from the building, kg.

$K_1=1.830\times10^{-6}$ kg/(m^3-ppm).

n=number of measurement points.

Q_{Fj}=average effluent volumetric flow rate corrected to standard conditions at fugitive emissions point j, m^3/min.

T_F=total duration of capture efficiency sampling run, min.

7. Calculations

7.1 *Total VOC fugitive emissions from the building.*

$$F_B = \sum_{j=1}^{n} C_{Fj} Q_{Fj} T_F K_1 \qquad \text{Eq. 1}$$

7.2 *VOC concentration of the fugitive emissions at point j.*

$$C_{Fj} = (C_j - C_{DO}) \frac{C_H}{C_{DH} - C_{DO}} \qquad \text{Eq. 2}$$

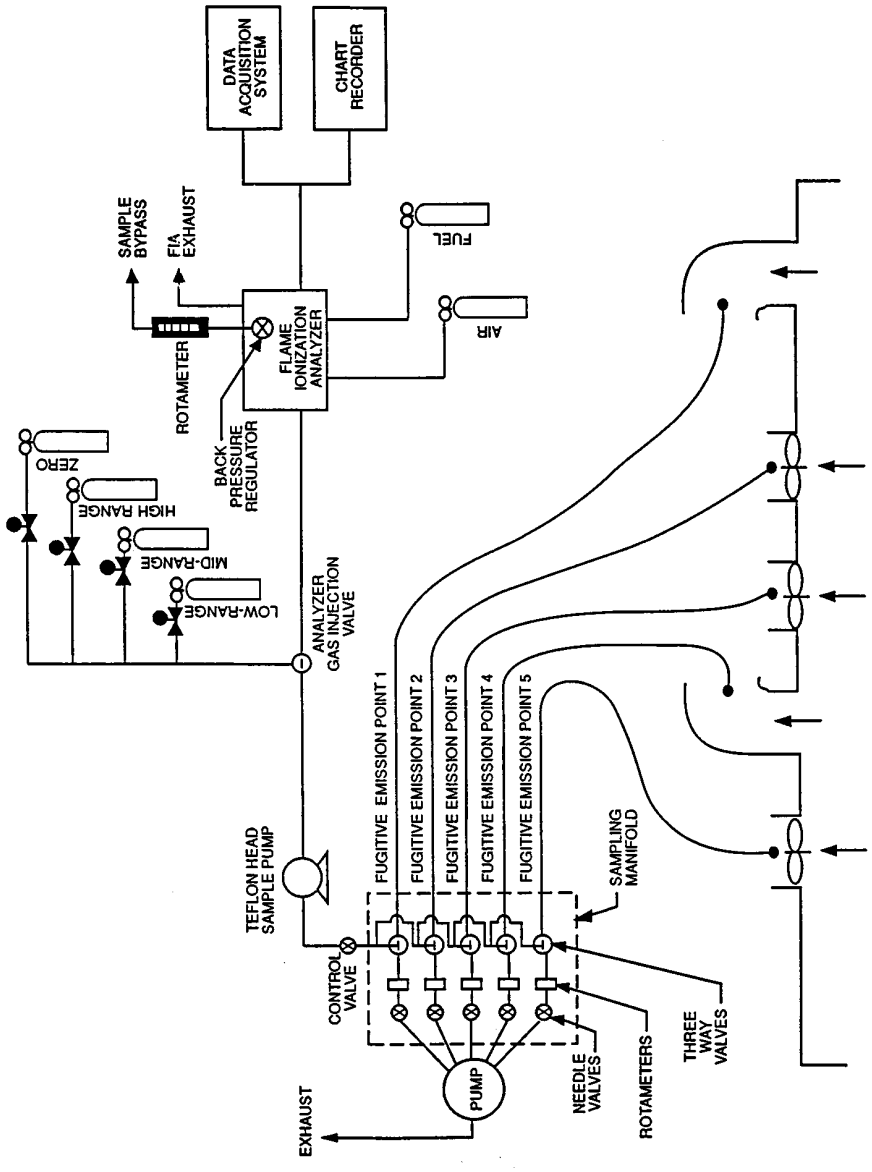

Figure 1. Fugitive emissions measurement system.

Procedure F.1—Fugitive VOC Emissions From Temporary Enclosures

1. Introduction

1.1 *Applicability.* This procedure is applicable for determining the fugitive volatile organic compounds (VOC) emissions from a temporary total enclosure (TTE). It is intended to be used as a segment in the development of liquid/gas or gas/gas protocols for determining VOC capture efficiency (CE) for surface coating and printing operations.

1.2 *Principle.* The amount of fugitive VOC emissions (F) from the TTE is calculated as the sum of the products of the VOC content (C_{Fj}), the flow rate (Q_{Fj}), and the sampling time (T_F) from each fugitive emissions point.

1.3 *Estimated measurement uncertainty.* The measurement uncertainties are estimated for each fugitive emission point as follows: Q=±5.5 percent and C_{Fj}=±5.0 percent. Based on these numbers, the probable uncertainty for F is estimated at about ±7.4 percent.

1.4 *Sampling requirements.* A capture efficiency test shall consist of at least three sampling runs. The sampling time for each run should be at least 8 hours, unless otherwise approved.

1.5 *Notes.* Because this procedure is often applied in highly explosive areas, caution and care should be exercised in choosing appropriate equipment and installing and using the equipment. Mention of trade names or company products does not constitute endorsement. All gas concentrations (percent, ppm) are by volume, unless otherwise noted.

2. Apparatus and Reagents

2.1 *Gas VOC concentration.* A schematic of the measurement system is shown in Figure 1. The main components are described below:

2.1.1 *Sample probe.* Stainless steel, or equivalent. The probe shall be heated to prevent VOC condensation.

2.1.2 *Calibration valve assembly.* Three-way valve assembly at the outlet of sample probe to direct the zero and calibration gases to the analyzer. Other methods, such as quick-connect lines, to route calibration gases to the outlet of the sample probe are acceptable.

2.1.3 *Sample line.* Stainless steel or Teflon tubing to transport the sample gas to the analyzer. The sample line must be heated to prevent condensation.

2.1.4 *Sample pump.* A leak-free pump, to pull the sample gas through the system at a flow rate sufficient to minimize the response time of the measurement system. The components of the pump that contact the gas stream shall be constructed of stainless steel or Teflon. The sample pump must be heated to prevent condensation.

2.1.5 *Sample flow rate control.* A sample flow rate control valve and rotameter, or equivalent, to maintain a constant sampling rate within 10 percent. The flow control valve and rotameter must be heated to prevent condensation. A control valve may also be located on the sample pump bypass loop to assist in controlling the sample pressure and flow rate.

2.1.6 *Sample gas manifold.* Capable of diverting a portion of the sample gas stream to the flame ionization analyzer (FIA), and the remainder to the bypass discharge vent. The manifold components shall be constructed of stainless steel or Teflon. If emissions are to be measured at multiple locations, the measurement system shall be designed to use separate sampling probes, lines, and pumps for each measurement location and a common sample gas manifold and FIA. The sample gas manifold and connecting lines to the FIA must be heated to prevent condensation.

2.1.7 *Organic concentration analzyer.* An FIA with a span value of 1.5 times the expected concentration as propane; however, other span values may be used if it can be demonstrated that they would provide more accurate measurements. The system shall be capable of meeting or exceeding the following specifications:

2.1.7.1 *Zero drift.* Less than ±3.0 percent of the span value.

2.1.7.2 *Calibration drift.* Less than ±3.0 percent of the span value.

2.1.7.3 *Calibration error.* Less than ±5.0 percent of the calibration gas value.

2.1.7.4 *Response time.* Less than 30 seconds.

2.1.8 Integrator/data acquisition system. An analog or digital device or computerized data acquisition system used to integrate the FIA response or compute the average response and record measurement data. The minimum data sampling frequency for computing average or integrated values is one measurement value every 5 seconds. The device shall be capable of recording average values at least once per minute.

2.1.9 *Calibration and other gases.* Gases used for calibration, fuel, and combustion air (if required) are contained in compressed gas cylinders. All calibration gases shall be traceable to NIST standards and shall be certified by the manufacturer to ±1 percent of the tag value. Additionally, the manufacturer of the cylinder should provide a recommended shelf life for each calibration gas cylinder over which the concentration does not change more than ±2 percent from the certified value. For calibration gas values not generally available, alternative methods for preparing calibration gas mixtures, such as dilution systems, may be used with prior approval.

2.1.9.1 *Fuel.* A 40 percent H_2/60 percent He or 40 percent H_2/60 percent N_2 gas mixture is recommended to avoid an oxygen synergism effect that reportedly occurs when oxygen concentration varies significantly from a mean value.

2.1.9.2 *Carrier gas.* High purity air with less than 1 ppm of organic material (as propane or carbon equivalent) or less than 0.1 percent of the span value, whichever is greater.

2.1.9.3 *FIA linearity calibration gases.* Low-, mid-, and high-range gas mixture standards with nominal propane concentrations of 20–30, 45–55, and 70–80 percent of the span value in air, respectively. Other calibration values and other span values may be used if it can be shown that more accurate measurements would be achieved.

2.1.10 *Particulate filter.* An in-stack or an out-of-stack glass fiber filter is recommended if exhaust gas particulate loading is significant. An out-of-stack filter must be heated to prevent any condensation unless it can be demonstrated that no condensation occurs.

2.2 *Fugitive emissions volumetric flow rate.*

2.2.1 *Method 2 or 2A apparatus.* For determining volumetric flow rate.

2.2.2 *Method 3 apparatus and reagents.* For determining molecular weight of the gas stream. An estimate of the molecular weight of the gas stream may be used if it can be justified.

2.2.3 *Method 4 apparatus and reagents.* For determining moisture content, if necessary.

2.3 *Temporary total enclosure.* The criteria for designing a TTE are discussed in Procedure T.

3. Determination of Volumetric Flow Rate of Fugitive Emissions

3.1 Locate all points where emissions are exhausted from the TTE. Using Method 1, determine the sampling points. Be sure to check each site for cyclonic or swirling flow.

3.2 Measure the velocity at each sampling site at least once every hour during each sampling run using Method 2 or 2A.

4. Determination of VOC Content of Fugitive Emissions

4.1 *Analysis duration.* Measure the VOC responses at each fugitive emission point during the entire test run or, if applicable, while the process is operating. If there are multiple emission locations, design a sampling system to allow a single FIA to be used to determine the VOC responses at all sampling locations.

4.2 *Gas VOC concentration.*

4.2.1 Assemble the sample train as shown in Figure 1. Calibrate the FIA and conduct a system check according to the procedures in sections 5.1 and 5.3, respectively.

4.2.2 Install the sample probe so that the probe is centrally located in the stack, pipe, or duct, and is sealed tightly at the stack port connection.

4.2.3 Inject zero gas at the calibration valve assembly. Allow the measurement system response to reach zero. Measure the system response time as the time required for the system to reach the effluent concentration after the calibration valve has been returned to the effluent sampling position.

4.2.4 Conduct a system check before and a system drift check after each sampling run according to the procedures in sections 5.2 and 5.3. If the drift check following a run indicates unacceptable performance, the run is not valid. The tester may elect to perform system drift checks during the run not to exceed one drift check per hour.

4.2.5 Verify that the sample lines, filter, and pump temperatures are 120 ± 5 °C.

4.2.6 Begin sampling at the start of the test period and continue to sample during the entire run. Record the starting and ending times and any required process information as appropriate. If multiple emission locations are sampled using a single FIA, sample at each location for the same amount of time (*e.g.*, 2 minutes) and continue to switch from one location to another for the entire test run. Be sure that total sampling time at each location is the same at the end of the test run. Collect at least 4 separate measurements from each sample point during each hour of testing. Disregard the response measurements at each sampling location until two times the response time of the measurement system has elapsed. Continue sampling for at least 1 minute and record the concentration measurements.

4.3 *Background concentration.*

4.3.1 *Determination of VOC background concentration.*

4.3.1.1 Locate all NDO's of the TTE. A sampling point shall be centrally located outside of the TTE at 4 equivalent diameters from each NDO, if possible. If there are more than 6 NDO's, choose 6 sampling points evenly spaced among the NDO's.

4.3.1.2 Assemble the sample train as shown in Figure 2. Calibrate the FIA and conduct a system check according to the procedures in sections 5.1 and 5.3.

4.3.1.3 Position the probe at the sampling location.

4.3.1.4 Determine the response time, conduct the system check and sample according to the procedures described in sections 4.2.3 to 4.2.6.

4.4 *Alternative procedure.* The direct interface sampling and analysis procedure described in section 7.2 of Method 18 may be used to determine the gas VOC concentration. The system must be designed to collect and analyze at least one sample every 10 minutes.

5. Calibration and Quality Assurance

5.1 *FIA calibration and linearity check.* Make necessary adjustments to the air and fuel supplies for the FIA and ignite the burner. Allow the FIA to warm up for the period recommended by the manufacturer. Inject a

calibration gas into the measurement system and adjust the back-pressure regulator to the value required to achieve the flow rates specified by the manufacturer. Inject the zero- and the high-range calibration gases and adjust the analyzer calibration to provide the proper responses. Inject the low- and mid-range gases and record the responses of the measurement system. The calibration and linearity of the system are acceptable if the responses for all four gases are within 5 percent of the respective gas values. If the performance of the system is not acceptable, repair or adjust the system and repeat the linearity check. Conduct a calibration and linearity check after assembling the analysis system and after a major change is made to the system.

5.2 *Systems drift checks.* Select the calibration gas concentration that most closely approximates that of the fugitive gas emissions to conduct the drift checks. Introduce the zero and calibration gas at the calibration valve assembly and verify that the appropriate gas flow rate and pressure are present at the FIA. Record the measurement system responses to the zero and calibration gases. The performance of the system is acceptable if the difference between the drift check measurement and the value obtained in section 5.1 is less than 3 percent of the span value. Conduct a system drift check at the end of each run.

5.3 *System check.* Inject the high range calibration gas at the inlet of the sampling probe and record the response. The performance of the system is acceptable if the measurement system response is within 5 percent of the value obtained in section 5.1 for the high range calibration gas. Conduct a system check before each test run.

5.4 *Analysis audit.* Immediately before each test analyze an audit cylinder as described in section 5.2. The analysis audit must agree with the audit cylinder concentration within 10 percent.

6. Nomenclature

A_i=area of NDO i, ft².

A_N=total area of all NDO's in the enclosure, ft².

C_{Bi}=corrected average VOC concentration of background emissions at point i, ppm propane.

C_B=average background concentration, ppm propane.

C_{DH}=average measured concentration for the drift check calibration gas, ppm propane.

C_{DO}=average system drift check concentration for zero concentration gas, ppm propane.

C_{Fj}=corrected average VOC concentration of fugitive emissions at point j, ppm propane.

C_H=actual concentration of the drift check calibration gas, ppm propane.

C_i=uncorrected average background VOC concentration at point i, ppm propane.

C_j=uncorrected average VOC concentration measured at point j, ppm propane.

F=total VOC content of fugitive emissions, kg.

K_1=1.830×10^{-6} kg/(m^3−ppm).

n=number of measurement points.

Q_{Fj}=average effluent volumetric flow rate corrected to standard conditions at fugitive emissions point j, m^3/min.

T_F=total duration of fugitive emissions sampling run, min.

7. Calculations

7.1 *Total VOC fugitive emissions.*

$$F = \sum_{j=1}^{n} (C_{Fj} - C_B)\, Q_{Fj}\, T_F\, K_1 \qquad \text{Eq. 1}$$

7.2 *VOC concentration of the fugitive emissions at point j.*

$$C_{Fj} = (C_j - C_{DO}) \frac{C_H}{C_{DH} - C_{DO}} \qquad \text{Eq. 2}$$

7.3 *Background VOC concentration at point i.*

$$C_{Bi} = (C_i - C_{DO}) \frac{C_H}{C_{DH} - C_{DO}} \qquad \text{Eq. 3}$$

7.4 *Average background concentration.*

$$C_B = \frac{\sum_{i=1}^{n} C_{Bi} A_i}{n A_N} \qquad \text{Eq. 4}$$

NOTE: If the concentration at each point is within 20 percent of the average concentration of all points, the terms ''A_i'' and ''A_N'' may be deleted from Equation 4.

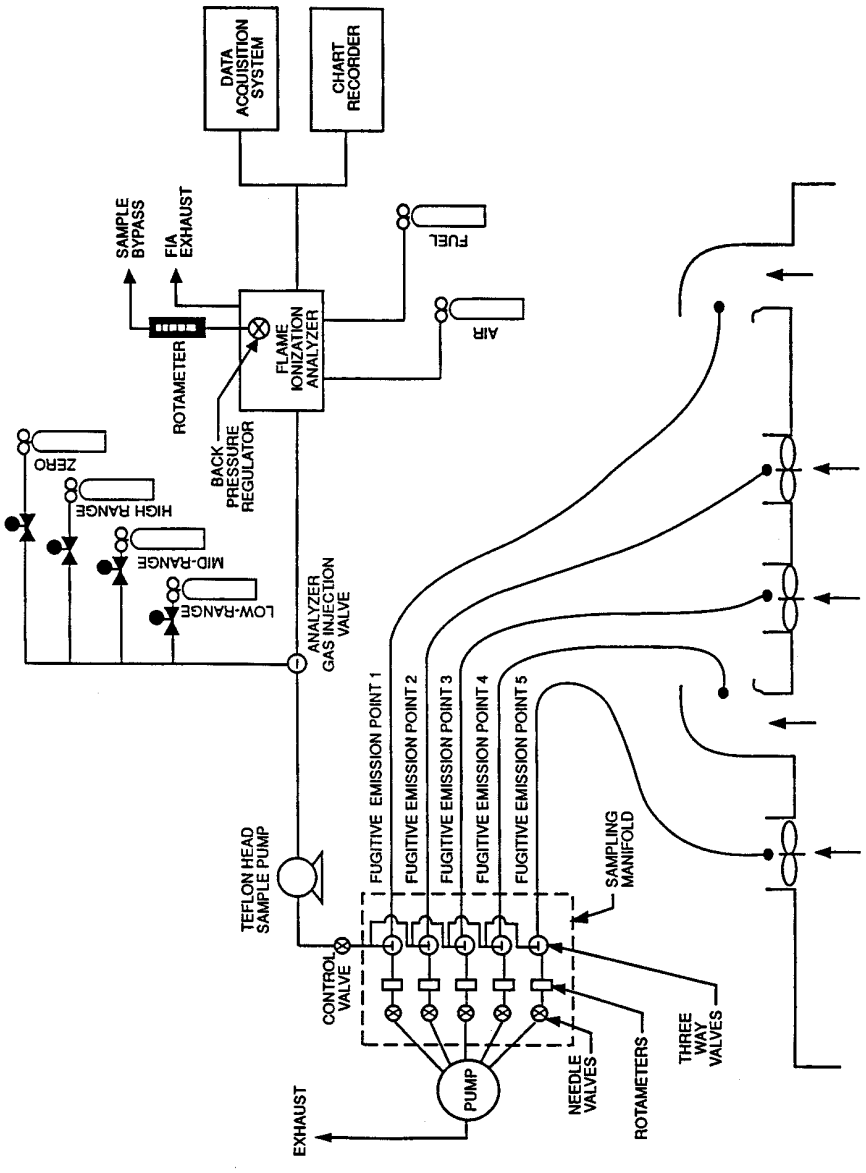

Figure 1. Fugitive emissions measurement system.

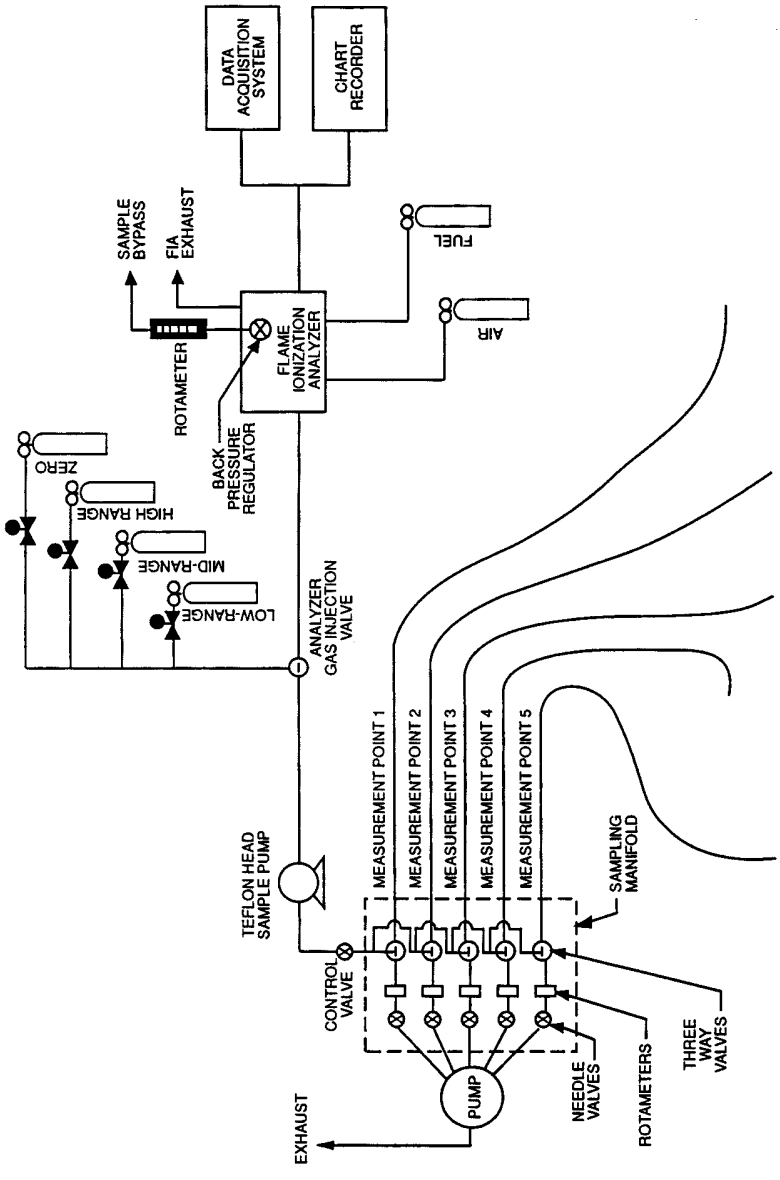

Figure 2. Background measurement system.

Procedure L—VOC Input

1. Introduction

1.1 *Applicability.* This procedure is applicable for determining the input of volatile organic compounds (VOC). It is intended to be used as a segment in the development of liquid/gas protocols for determining VOC capture efficiency (CE) for surface coating and printing operations.

1.2 *Principle.* The amount of VOC introduced to the process (L) is the sum of the products of the weight (W) of each VOC containing liquid (ink, paint, solvent, *etc.*) used and its VOC content (V). A sample of each VOC containing liquid is analyzed with a flame ionization analyzer (FIA) to determine V.

1.3 *Estimated measurement uncertainty.* The measurement uncertainties are estimated for each VOC containing liquid as follows: W=±2.0 percent and V=±12.0 percent. Based on these numbers, the probable uncertainty for L is estimated at about ±12.2 percent for each VOC containing liquid.

1.4 *Sampling requirements.* A capture efficiency test shall consist of at least three sampling runs. The sampling time for each run should be at least 8 hours, unless otherwise approved.

1.5 *Notes.* Because this procedure is often applied in highly explosive areas, caution and care should be exercised in choosing appropriate equipment and installing and using the equipment. Mention of trade names or company products does not constitute endorsement. All gas concentrations (percent, ppm) are by volume, unless otherwise noted.

2. Apparatus and Reagents

2.1 *Liquid weight.*

2.1.1 *Balances/digital scales.* To weigh drums of VOC containing liquids to within 0.2 lb.

2.1.2 *Volume measurement apparatus (alternative).* Volume meters, flow meters, density measurement equipment, etc., as needed to achieve same accuracy as direct weight measurements.

2.2 *VOC content (flame ionization analyzer technique).* The liquid sample analysis system is shown in Figures 1 and 2. The following equipment is required:

2.2.1 *Sample collection can.* An appropriately sized metal can to be used to collect VOC containing materials. The can must be constructed in such a way that it can be grounded to the coating container.

2.2.2 *Needle valves.* To control gas flow.

2.2.3 *Regulators.* For carrier gas and calibration gas cylinders.

2.2.4 *Tubing.* Teflon or stainless steel tubing with diameters and lengths determined by connection requirements of equipment. The tubing between the sample oven outlet and the FIA shall be heated to maintain a temperature of 120±5 °C.

2.2.5 *Atmospheric vent.* A tee and 0- to 0.5-liter/min rotameter placed in the sampling line between the carrier gas cylinder and the VOC sample vessel to release the excess carrier gas. A toggle valve placed between the tee and the rotameter facilitates leak tests of the analysis system.

2.2.6 *Thermometer.* Capable of measuring the temperature of the hot water bath to within 1 °C.

2.2.7 *Sample oven.* Heated enclosure, containing calibration gas coil heaters, critical orifice, aspirator, and other liquid sample analysis components, capable of maintaining a temperature of 120±5 °C.

2.2.8 *Gas coil heaters.* Sufficient lengths of stainless steel or Teflon tubing to allow zero and calibration gases to be heated to the sample oven temperature before entering the critical orifice or aspirator.

2.2.9 *Water bath.* Capable of heating and maintaining a sample vessel temperature of 100±5 °C.

2.2.10 *Analytical balance.* To measure ±0.001 g.

2.2.11 *Disposable syringes.* 2-cc or 5-cc.

2.2.12 *Sample vessel.* Glass, 40-ml septum vial. A separate vessel is needed for each sample.

2.2.13 *Rubber stopper.* Two-hole stopper to accommodate 3.2-mm (⅛-in.) Teflon tubing, appropriately sized to fit the opening of the sample vessel. The rubber stopper should be wrapped in Teflon tape to provide a tighter seal and to prevent any reaction of the sample with the rubber stopper. Alternatively, any leak-free closure fabricated of non-reactive materials and accommodating the necessary tubing fittings may be used.

2.2.14 *Critical orifices.* Calibrated critical orifices capable of providing constant flow rates from 50 to 250 ml/min at known pressure drops. Sapphire orifice assemblies (available from O'Keefe Controls Company) and glass capillary tubing have been found to be adequate for this application.

2.2.15 *Vacuum gauge.* 0 -to 760-mm (0- to 30-in.) Hg U-Tube manometer or vacuum gauge.

2.2.16 *Pressure gauge.* Bourdon gauge capable of measuring the maximum air pressure at the aspirator inlet (e.g., 100 psig).

2.2.17 *Aspirator.* A device capable of generating sufficient vacuum at the sample vessel to create critical flow through the calibrated orifice when sufficient air pressure is present at the aspirator inlet. The aspirator must also provide sufficient sample pressure to operate the FIA. The sample is also mixed with the dilution gas within the aspirator.

2.2.18 *Soap bubble meter.* Of an appropriate size to calibrate the critical orifices in the system.

2.2.19 *Organic concentration analyzer.* An FIA with a span value of 1.5 times the expected concentration as propane; however

other span values may be used if it can be demonstrated that they would provide more accurate measurements. The system shall be capable of meeting or exceeding the following specifications:

2.2.19.1 *Zero drift.* Less than ±3.0 percent of the span value.

2.2.19.2 *Calibration drift.* Less than ±3.0 percent of span value.

2.2.19.3 *Calibration error.* Less than ±5.0 percent of the calibration gas value.

2.2.20 *Integrator/data acquisition system.* An analog or digital device or computerized data acquisition system used to integrate the FIA response or compute the average response and record measurement data. The minimum data sampling frequency for computing average or integrated values is one measurement value every 5 seconds. The device shall be capable of recording average values at least once per minute.

2.2.21 *Chart recorder (optional).* A chart recorder or similar device is recommended to provide a continuous analog display of the measurement results during the liquid sample analysis.

2.2.22 *Calibration and other gases.* For calibration, fuel, and combustion air (if required) contained in compressed gas cylinders. All calibration gases shall be traceable to NIST standards and shall be certified by the manufacturer to ±1 percent of the tag value. Additionally, the manufacturer of the cylinder should provide a recommended shelf life for each calibration gas cylinder over which the concentration does not change more than ±2 percent from the certified value. For calibration gas values not generally available, alternative methods for preparing calibration gas mixtures, such as dilution systems, may be used with prior approval.

2.2.22.1 *Fuel.* A 40 percent H_2/60 percent He or 40 percent H_2/60 percent N_2 gas mixture is recommended to avoid an oxygen synergism effect that reportedly occurs when oxygen concentration varies significantly from a mean value.

2.2.22.2 *Carrier gas.* High purity air with less than 1 ppm of organic material (as propane) or less than 0.1 percent of the span value, whichever is greater.

2.2.22.3 *FIA linearity calibration gases.* Low-, mid-, and high-range gas mixture standards with nominal propane concentrations of 20–30, 45–55, and 70–80 percent of the span value in air, respectively. Other calibration values and other span values may be used if it can be shown that more accurate measurements would be achieved.

2.2.22.4 *System calibration gas.* Gas mixture standard containing propane in air, approximately the undiluted VOC concentration expected for the liquid samples.

3. Determination of Liquid Input Weight

3.1 *Weight difference.* Determine the amount of material introduced to the process as the weight difference of the feed material before and after each sampling run. In determining the total VOC containing liquid usage, account for: (a) The initial (beginning) VOC containing liquid mixture; (b) any solvent added during the test run; (c) any coating added during the test run; and (d) any residual VOC containing liquid mixture remaining at the end of the sample run.

3.1.1 Identify all points where VOC containing liquids are introduced to the process. To obtain an accurate measurement of VOC containing liquids, start with an empty fountain (if applicable). After completing the run, drain the liquid in the fountain back into the liquid drum (if possible), and weigh the drum again. Weigh the VOC containing liquids to ±0.5 percent of the total weight (full) or ±0.1 percent of the total weight of VOC containing liquid used during the sample run, whichever is less. If the residual liquid cannot be returned to the drum, drain the fountain into a preweighted empty drum to determine the final weight of the liquid.

3.1.2 If it is not possible to measure a single representative mixture, than weigh the various components separately (*e.g.*, if solvent is added during the sampling run, weigh the solvent before it is added to the mixture). If a fress drum of VOC containing liquid is needed during the run, then weigh both the empty drum and fresh drum.

3.2 *Volume measurement (alternative).* If direct weight measurements are not feasible, the tester may use volume meters and flow rate meters (and density measurements) to determine the weight of liquids used if it can be demonstrated that the technique produces results equivalent to the direct weight measurements. If a single representative mixture cannot be measured, measure the components separately.

4. Determination of VOC Content in Input Liquids

4.1 *Collection of liquid samples.*

4.1.1 Collect a 100-ml or larger sample of the VOC containing liquid mixture at each application location at the beginning and end of each test run. A separate sample should be taken of each VOC containing liquid added to the application mixture during the test run. If a fresh drum is needed during the sampling run, then obtain a sample from the fresh drum.

4.1.2 When collecting the sample, ground the sample container to the coating drum. Fill the sample container as close to the rim as possible to minimize the amount of headspace.

4.1.3 After the sample is collected, seal the container so the sample cannot leak out or evaporate.

4.1.4 Label the container to identify clearly the contents.

4.2 *Liquid sample VOC content.*

4.2.1 Assemble the liquid VOC content analysis system as shown in Figure 1.

4.2.2 Permanently identify all of the critical orifices that may be used. Calibrate each critical orifice under the expected operating conditions (i.e., sample vacuum and temperature) against a volume meter as described in section 5.3.

4.2.3 Label and tare the sample vessels (including the stoppers and caps) and the syringes.

4.2.4 Install an empty sample vessel and perform a leak test of the system. Close the carrier gas valve and atmospheric vent and evacuate the sample vessel to 250 mm (10 in.) Hg absolute or less using the aspirator. Close the toggle valve at the inlet to the aspirator and observe the vacuum for at least one minute. If there is any change in the sample pressure, release the vacuum, adjust or repair the apparatus as necessary and repeat the leak test.

4.2.5 Perform the analyzer calibration and linearity checks according to the procedure in section 5.1. Record the responses to each of the calibration gases and the back-pressure setting of the FIA.

4.2.6 Establish the appropriate dilution ratio by adjusting the aspirator air supply or substituting critical orifices. Operate the aspirator at a vacuum of at least 25 mm (1 in.) Hg greater than the vacuum necessary to achieve critical flow. Select the dilution ratio so that the maximum response of the FIA to the sample does not exceed the high-range calibration gas.

4.2.7 Perform system calibration checks at two levels by introducing compressed gases at the inlet to the sample vessel while the aspirator and dilution devices are operating. Perform these checks using the carrier gas (zero concentration) and the system calibration gas. If the response to the carrier gas exceeds ±0.5 percent of span, clean or repair the apparatus and repeat the check. Adjust the dilution ratio as necessary to achieve the correct response to the upscale check, but do not adjust the analyzer calibration. Record the identification of the orifice, aspirator air supply pressure, FIA back-pressure, and the responses of the FIA to the carrier and system calibration gases.

4.2.8 After completing the above checks, inject the system calibration gas for approximately 10 minutes. Time the exact duration of the gas injection using a stopwatch. Determine the area under the FIA response curve and calculate the system response factor based on the sample gas flow rate, gas concentration, and the duration of the injection as compared to the integrated response using Equations 2 and 3.

4.2.9 Verify that the sample oven and sample line temperatures are 120±5 °C and that the water bath temperature is 100±5 °C.

4.2.10 Fill a tared syringe with approximately 1 g of the VOC containing liquid and weigh it. Transfer the liquid to a tared sample vessel. Plug the sample vessel to minimize sample loss. Weigh the sample vessel containing the liquid to determine the amount of sample actually received. Also, as a quality control check, weigh the empty syringe to determine the amount of material delivered. The two coating sample weights should agree within ±0.02 g. If not, repeat the procedure until an acceptable sample is obtained.

4.2.11 Connect the vessel to the analysis system. Adjust the aspirator supply pressure to the correct value. Open the valve on the carrier gas supply to the sample vessel and adjust it to provide a slight excess flow to the atmospheric vent. As soon as the initial response of the FIA begins to decrease, immerse the sample vessel in the water bath. (Applying heat to the sample vessel too soon may cause the FID response to exceed the calibrated range of the instrument, and thus invalidate the analysis.)

4.2.12 Continuously measure and record the response of the FIA until all of the volatile material has been evaporated from the sample and the instrument response has returned to the baseline (i.e., response less than 0.5 percent of the span value). Observe the aspirator supply pressure, FIA back-pressure, atmospheric vent, and other system operating parameters during the run; repeat the analysis procedure if any of these parameters deviate from the values established during the system calibration checks in Section 4.2.7. After each sample perform the drift check described in Section 5.2. If the drift check results are acceptable, calculate the VOC content of the sample using the equations in Section 7. Integrate the area under the FIA response curve, or determine the average concentration response and the duration of sample analysis.

5. Calibration and Quality Assurance

5.1 *FIA calibration and linearity check.* Make necessary adjustments to the air and fuel supplies for the FIA and ignite the burner. Allow the FIA to warm up for the period recommended by the manufacturer. Inject a calibration gas into the measurement system and adjust the back-pressure regulator to the value required to achieve the flow rates specified by the manufacturer. Inject the zero- and the high-range calibration gases and adjust the analyzer calibration to provide the proper responses. Inject the low- and mid-range gases and record the responses of the measurement system. The calibration and linearity of the system are acceptable if the responses for all four gases are within 5 percent of the respective gas

values. If the performance of the system is not acceptable, repair or adjust the system and repeat the linearity check. Conduct a calibration and linearity check after assembling the analysis system and after a major change is made to the system.

5.2 *Systems drift checks.* After each sample, repeat the system calibration checks in Section 4.2.7 before any adjustments to the FIA or measurement system are made. If the zero or calibration drift exceeds ±3 percent of the span value, discard the result and repeat the analysis.

5.3 *Critical orifice calibration.*

5.3.1 Each critical orifice must be calibrated at the specific operating conditions that it will be used. Therefore, assemble all components of the liquid sample analysis system as shown in Figure 3. A stopwatch is also required.

5.3.2 Turn on the sample oven, sample line, and water bath heaters and allow the system to reach the proper operating temperature. Adjust the aspirator to a vacuum of 380 mm (15 in.) Hg vacuum. Measure the time required for one soap bubble to move a known distance and record barometric pressure.

5.3.3 Repeat the calibration procedure at a vacuum of 406 mm (16 in.) Hg and at 25-mm (1-in.) Hg intervals until three consecutive determinations provide the same flow rate. Calculate the critical flow rate for the orifice in ml/min at standard conditions. Record the vacuum necessary to achieve critical flow.

6. Nomenclature

A_L=area under the response curve of the liquid sample, area count.

A_S=area under the response curve of the calibration gas, area count.

C_S=actual concentration of system calibration gas, ppm propane.

$K=1.830\times10^{-9}$ g/(ml-ppm).

L=total VOC content of liquid input, kg.

M_L=mass of liquid sample delivered to the sample vessel, g.

q=flow rate through critical orifice, ml/min.

RF=liquid analysis system response factor, g/area count.

T_S=total gas injection time for system calibration gas during integrator calibration, min.

V_{Fj}=final VOC fraction of VOC containing liquid j.

V_{Ij}=initial VOC fraction of VOC containing liquid j.

V_{Aj}=VOC fraction of VOC containing liquid j added during the run.

V=VOC fraction of liquid sample.

W_{Fj}=weight of VOC containing liquid j remaining at end of the run, kg.

W_{Ij}=weight of VOC containing liquid j at beginning of the run, kg.

W_{Aj}=weight of VOC containing liquid j added during the run, kg.

7. Calculations

7.1 *Total VOC content of the input VOC containing liquid.*

$$L=\sum_{j=1}^{n} V_{Ij} W_{Ij} - \sum_{j=1}^{n} V_{Fj} W_{Fj} + \sum_{j=1}^{n} V_{Aj} W_{Aj} \quad \text{Eq. 1}$$

7.2 *Liquid sample analysis system response factor for systems using intergrators, grams/area counts.*

$$RF = \frac{C_S\, q\, T_S\, K}{A_S} \quad \text{Eq. 2}$$

7.3 VOC content of the liquid sample.

$$V = \frac{A_L RF}{M_L} \quad \text{Eq. 3}$$

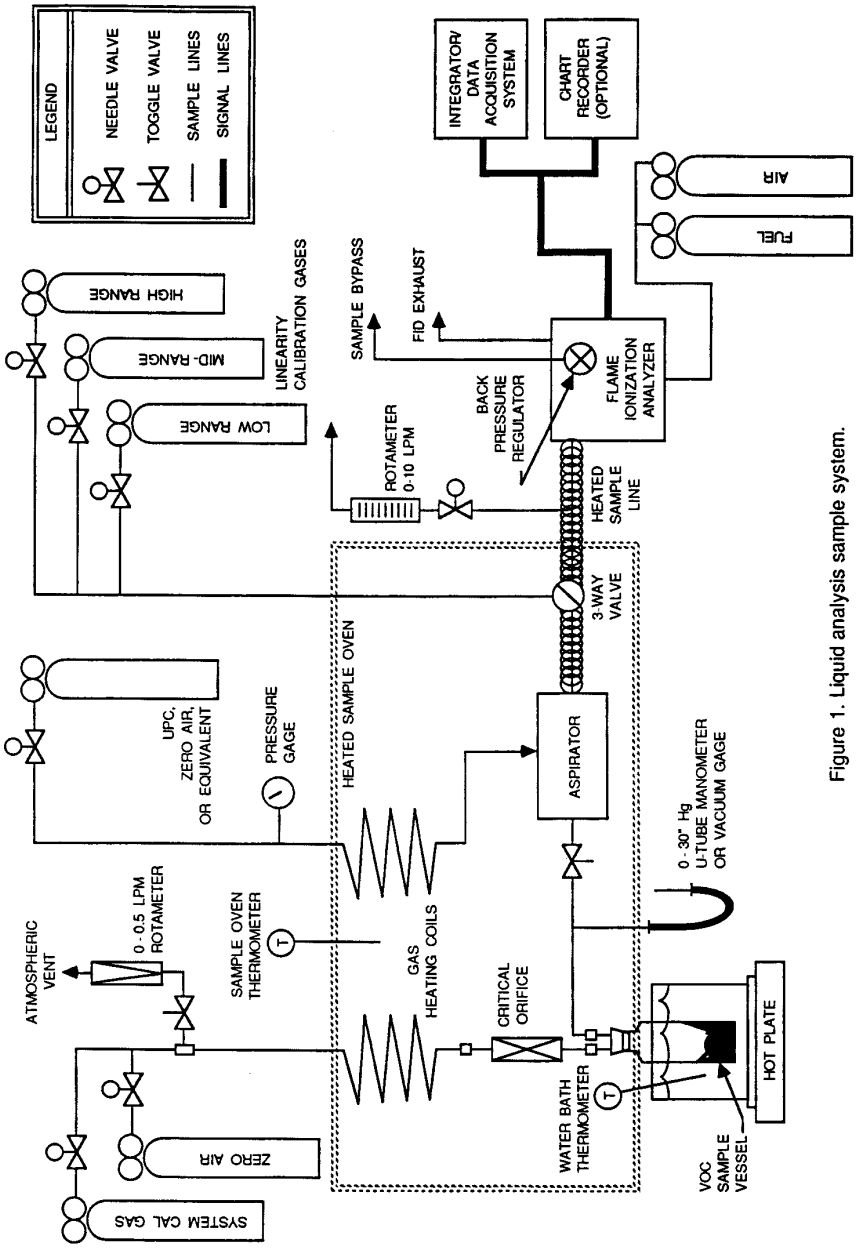

Figure 1. Liquid analysis sample system.

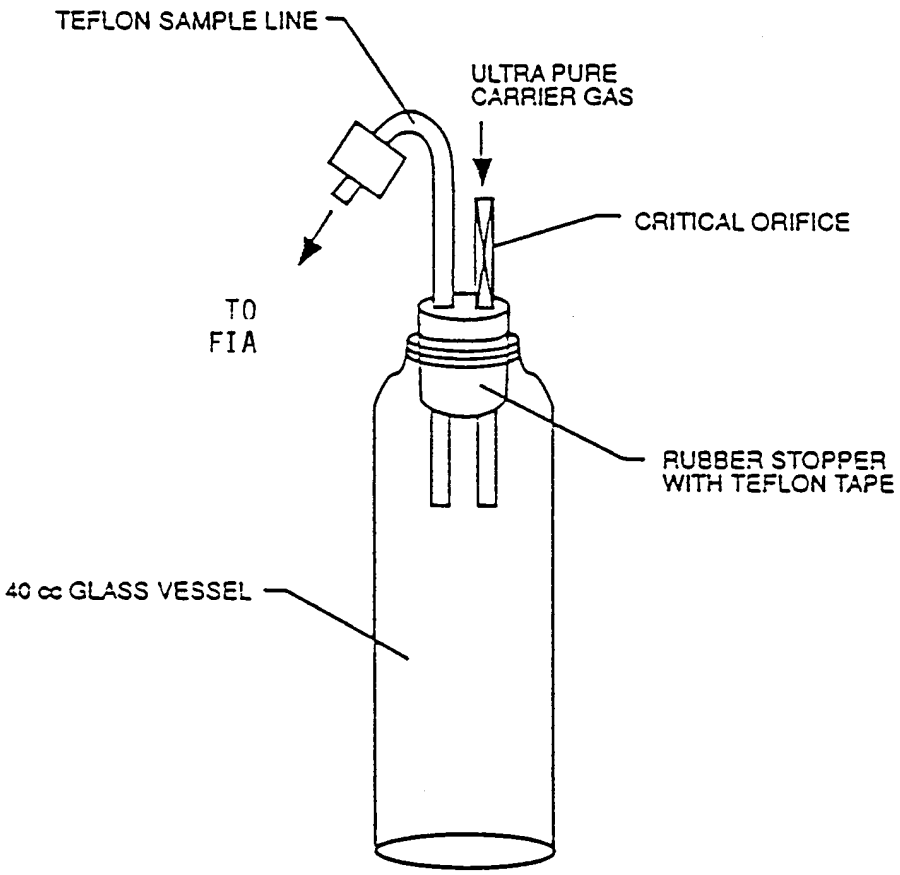

Figure 2. VOC sampling vessel.

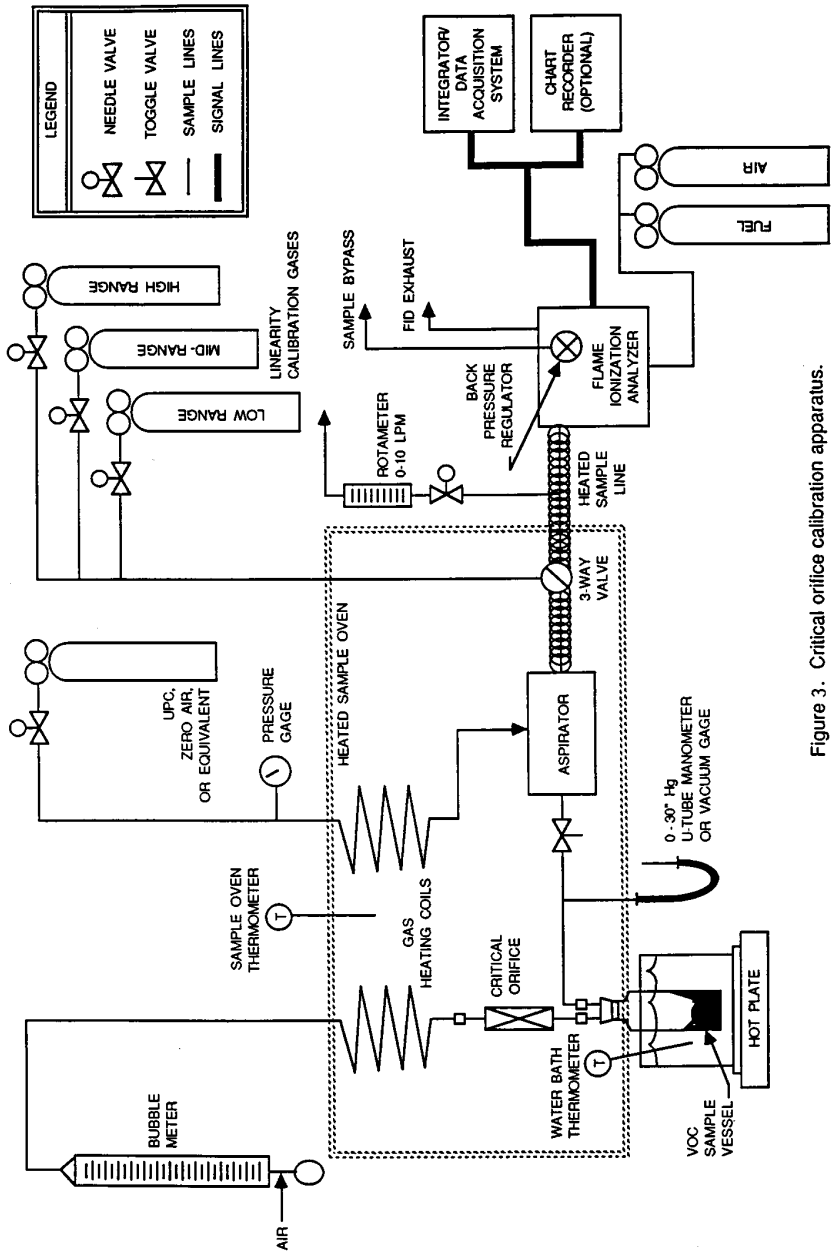

Figure 3. Critical orifice calibration apparatus.

Procedure T—Criteria for and Verification of a Permanent or Temporary Total Enclosure

1. Introduction

1.1 *Applicability*. This procedure is used to determine whether a permanent or temporary enclosure meets the criteria of a total enclosure.

1.2 *Principle.* An enclosure is evaluated against a set of criteria. If the criteria are met and if all the exhaust gases are ducted to a control device, then the volatile organic compounds (VOC) capture efficiency (CE) is assumed to be 100 percent and CE need not be measured. However, if part of the exhaust gas stream is not ducted to a control device, CE must be determined.

2. Definitions

2.1 *Natural Draft Opening (NDO)*—Any permanent opening in the enclosure that remains open during operation of the facility and is not connected to a duct in which a fan is installed.

2.2 *Permanent Total Enclosure (PTE)*—A permanently installed enclosure that completely surrounds a source of emissions such that all VOC emissions are captured and contained for discharge through a control device.

2.3 *Temporary Total Enclosure (TTE)*—A temporarily installed enclosure that completely surrounds a source of emissions such that all VOC emissions are captured and contained for discharge through ducts that allow for the accurate measurement of VOC rates.

3. Criteria of a Temporary Total Enclosure

3.1 Any NDO shall be at least 4 equivalent opening diameters from each VOC emitting point.

3.2 Any exhaust point from the enclosure shall be at least 4 equivalent duct or hood diameters from each NDO.

3.3 The total area of all NDO's shall not exceed 5 percent of the surface area of the enclosure's four walls, floor, and ceiling.

3.4 The average facial velocity (FV) of air through all NDO's shall be at least 3,600 m/hr (200 fpm). The direction of air through all NDO's shall be into the enclosure.

3.5 All access doors and windows whose areas are not included in section 3.3 and are not included in the calculation in section 3.4 shall be closed during routine operation of the process.

4. Criteria of a Permanent Total Enclosure

4.1 Same as sections 3.1 and 3.3–3.5.

4.2 All VOC emissions must be captured and contained for discharge through a control device.

5. Procedure

5.1 Determine the equivalent diameters of the NDO's and determine the distances from each VOC emitting point to all NDO's. Determine the equivalent diameter of each exhaust duct or hood and its distance to all NDO's. Calculate the distances in terms of equivalent diameters. The number of equivalent diameters shall be at least 4.

5.2 Measure the total area (A_t) of the enclosure and the total area (A_N) of all NDO's of the enclosure. Calculate the NDO to enclosure area ratio (NEAR) as follows:

$$NEAR=A_N/A_t$$

The NEAR must be ≤0.05.

5.3 Measure the volumetric flow rate, corrected to standard conditions, of each gas stream exiting the enclosure through an exhaust duct or hood using EPA Method 2. In some cases (*e.g.*, when the building is the enclosure), it may be necessary to measure the volumetric flow rate, corrected to standard conditions, of each gas stream entering the enclosure through a forced makeup air duct using Method 2. Calculate FV using the following equation:

$$FV=[Q_O - Q_I]/A_N$$

where:

Q_O=the sum of the volumetric flow from all gas streams exiting the enclosure through an exhaust duct or hood.

Q_I=the sum of the volumetric flow from all gas streams into the enclosure through a forced makeup air duct; zero, if there is no forced makeup air into the enclosure.

A_N=total area of all NDO's in enclosure.

The FV shall be at least 3,600 m/hr (200 fpm).

5.4 Verify that the direction of air flow through all NDO's is inward. Use streamers, smoke tubes, tracer gases, etc. Strips of plastic wrapping film have been found to be effective. Monitor the direction of air flow at intervals of at least 10 minutes for at least 1 hour.

6. Quality Assurance

6.1 The success of this protocol lies in designing the TTE to simulate the conditions that exist without the TTE, i.e., the effect of the TTE on the normal flow patterns around the affected facility or the amount of fugitive VOC emissions should be minimal. The TTE must enclose the application stations, coating reservoirs, and all areas from the application station to the oven. The oven does not have to be enclosed if it is under negative pressure. The NDO's of the temporary enclosure and a fugitive exhaust fan must be properly sized and placed.

6.2 Estimate the ventilation rate of the TTE that best simulates the conditions that exist without the TTE, i.e., the effect of the TTE on the normal flow patterns around the affected facility or the amount of fugitive

VOC emissions should be minimal. Figure 1 may be used as an aid. Measure the concentration (C_G) and flow rate (Q_G) of the captured gas stream, specify a safe concentration (C_F) for the fugitive gas stream, estimate the CE, and then use the plot in Figure 1 to determine the volumetric flowrate of the fugitive gas stream (Q_F). A fugitive VOC emission exhaust fan that has a variable flow control is desirable.

6.2.1 Monitor the concentration of VOC into the capture device without the TTE. To minimize the effect of temporal variation on the captured emissions, the baseline measurement should be made over as long a time period as practical. However, the process conditions must be the same for the measurement in section 6.2.3 as they are for this baseline measurement. This may require short measuring times for this quality control check before and after the construction of the TTE.

6.2.2 After the TTE is constructed, monitor the VOC concentration inside the TTE. This concentration shall continue to increase and must not exceed the safe level according to OSHA requirements for permissible exposure limits. An increase in VOC concentration indicates poor TTE design or poor capture efficiency.

6.2.3 Monitor the concentration of VOC into the capture device with the TTE. To limit the effect of the TTE on the process, the VOC concentration with and without the TTE must be within ±10 percent. If the measurements do not agree, adjust the ventilation rate from the TTE until they agree within 10 percent.

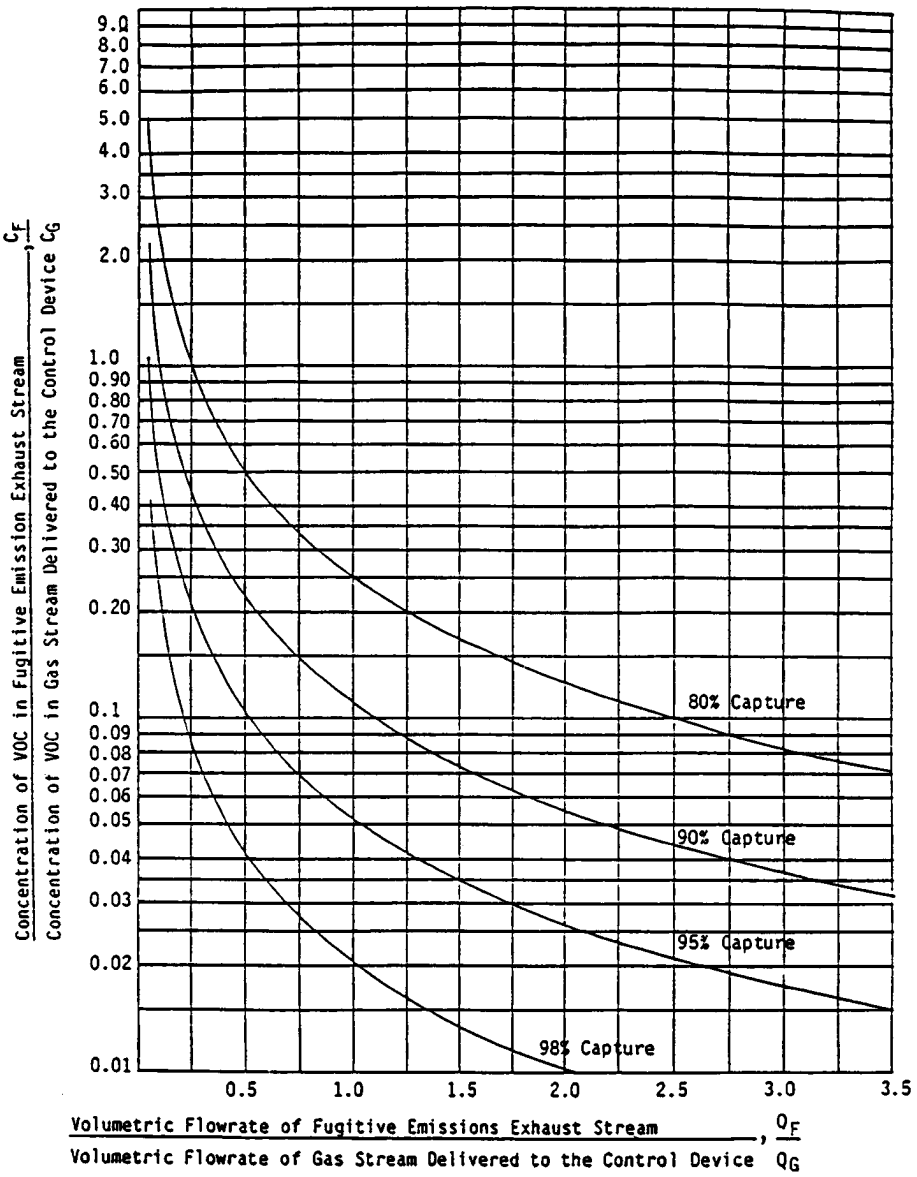

Figure 1. The Crumpler Chart

[55 FR 26856, June 29, 1990; 55 FR 31981, Aug. 6, 1990; 55 FR 39774, 39775, Sept. 28, 1990, as amended at 56 FR 24723, May 31, 1991; 56 FR 33712, July 23, 1991; 57 FR 3946, Feb. 3, 1992; 57 FR 7550, Mar. 3, 1992; 57 FR 27936, June 23, 1992; 58 FR 31653, June 4, 1993; 58 FR 34908, June 30, 1993; 59 FR 14112, Mar. 25, 1994; 59 FR 46569, Sept. 9, 1994; 60 FR 41, Jan. 3, 1995; 60 FR 13045, Mar. 10, 1995; 60 FR 14900, Mar. 21, 1995; 60 FR 43387, 43393, 43395, Aug. 21, 1995]

§ 52.742 Incorporation by reference.

The materials listed below are incorporated by reference in the corresponding sections noted. The incorporation by reference was approved by the Director of the Office of Federal Register in accordance with 5 U.S.C. 552(a) and 1 CFR part 51. These materials are incorporated as they exist on the date of approval, and a notice of any change in these materials will be published in the FEDERAL REGISTER. The materials are available from the sources listed below.

(a) The following material is available for purchase from the American Society for Testing and Materials (ASTM), 1916 Race Street, Philadelphia, PA 19103.

(1) ASTM D1475–85, Standard Test Method for Density of Paint, Varnish, Lacquer, and Related Products, for § 52.741(a)(4)(i)(B)(*3*)(*i*).

(2) ASTM D2369–87, Standard Test Method for Volatile Content of Coatings, for § 52.741(a)(4)(i)(B)(*3*)(*ii*).

(3) ASTM D3792–86, Standard Test Method for Water Content of Water-Reducible Paints by Direct Injection into a Gas Chromatograph, for § 52.741(a)(4)(i)(B)(*3*)(*iii*).

(4) ASTM D4017–81(Reapproved 1987), Standard Test Method for Water in Paints and Paint Materials by Karl Fischer Method, for § 52.741(a)(4)(i)(B)(*3*)(*iv*).

(5) ASTM D4457–85, Standard Test Method for Determination of Dichloromethane and 1,1,1-Trichloroethane in Paints and Coatings by Direct Injection into a Gas Chromatograph, for § 52.741(a)(4)(i)(B)(*3*)(*v*).

(6) ASTM D2697–86, Standard Test Method for Volume Nonvolatile Matter in Clear or Pigmented Coatings, for § 52.741(a)(4)(i)(B)(*3*)(*vi*).

(7) ASTM D3980–87, Standard Practice for Interlaboratory Testing of Paint and Related Materials, for § 52.741(a)(4)(i)(B)(*3*)(*vi*).

(8) ASTM E180–85, Standard Practice for Determining the Precision of ASTM Methods for Analysis and Testing of Industrial Chemicals, for § 52.741(a)(4)(i)(B)(*3*)(*viii*).

(9) ASTM D2372–85, Standard Method of Separation of Vehicle from Solvent-Reducible Paints, for § 52.741(a)(4)(i)(B)(*3*)(*ix*).

(10) ASTM D2879–86, Standard Test Method for Vapor Pressure-Temperature Relationship and Initial Decomposition Temperature of Liquids by Isoteniscope, for § 52.741(a)(3), (a)(8)(ii), (a)(9)(iii), and (a)(10)(iii).

(11) ASTM D323–82, Standard Test Method for Vapor Pressure of Petroleum Products (Reid Method), for § 52.741(a)(3).

(12) ASTM D86–82, Standard Method for Distillation of Petroleum Products, for § 52.741(a)(3).

(13) ASTM D3925–81(Reapproved 1985), Standard Practice for Sampling Liquid Paints and Related Pigment Coatings, for § 52.741(a)(4)(i)(A)(*1*).

(14) ASTM E300–86, Standard Practice for Sampling Industrial Chemicals, for § 52.741(a)(4)(i)(A)(*2*).

(b) The Evaporation Loss From External Floating-Roof Tanks, Publication 2517, second edition, February 1980, for § 52.741(a)(3) is available for purchase from the American Petroleum Institute, 2101 L Street, NW., Washington, DC 20037.

(c) The Standard Industrial Classification Manual, 1987, for § 52.741(a)(3) is available for purchase from the Superintendent of Documents, U.S. Government Printing Office, Washington, DC 20402.

(d) 35 Illinois Administrative Code 215, June 1989, subparts (B), (E) (sections 215.182, 215.183, and 215.184), (K) (sections 215.301 and 215.302), (Q) (excluding sections 215.432 and 215.436), (R) (excluding sections 215.447, 215.450, and 215.452), (S), (V), (X), (Y) (sections 215.582, 215.583, and 215.584), and (Z) of 35 Ill. Adm. Code 215 for § 52.741 (d)(l)–(d)(3); (e)(3), (e)(4); (h)(2); (i)(1), (i)(2); (j)(1)–(j)(3); (q)(1); (s)(1); (u)(1), (3); (v)(1); (w)(1); and (x)(1), (x)(3) is available from the United States Environmental Protection Agency, Air and Radiation Division, Region V, 230 S. Dearborn, Chicago, IL, 60604.

[55 FR 26909, June 29, 1990]

§ 52.743 Continuous monitoring.

(a) Alternative monitoring requirements established under Section 201.402 of Title 35, IAC must be either: Incorporated into a federally enforceable operating permit or construction permit or submitted to USEPA for approval as a revision to the Illinois State Implementation Plan (SIP). Illinois shall set forth alternative emissions monitoring and reporting requirements to satisfy the intent of 40 CFR part 51, appendix P whenever Illinois exempts any source subject to Section 201.401 from installing continuous emission monitoring systems. Illinois may exempt a source if the source cannot install a continuous emission monitoring system because of physical plant limitations or extreme economic reasons, according to the criteria of Section 201.402.

(b) As codified at 40 CFR 52.737 (USEPA's approval of the Illinois operating permit program for the purpose of issuing federally enforceable construction and operating permits), USEPA reserves the right to deem an operating permit not federally enforceable. Such a determination will be made according to appropriate procedures including operating permit requirements promulgated at 54 FR 27274 (June 28, 1989) and will be based upon either; the permit, permit approval procedures or state or local permit requirements which do not conform with the operating permit program requirements or the requirements of USEPA's underlying regulations. Among other things, underlying requirements include 40 CFR 51.214 and part 51, appendix P and Illinois' approved SIP, 40 CFR part 52. Should USEPA deem an operating or construction permit containing alternative monitoring requirements not federally enforceable, the underlying continuous monitoring requirements at Section 201.401 of the State rule would be the Federal requirements contained in the SIP to which the source would be subject. This interpretation of the impact of an operating permit deemed not federally enforceable by USEPA on a source to which it was issued was acknowledged by the State in a March 3, 1993, letter from Bharat Mathur, Chief, Bureau of Air, Illinois Environmental Protection Agency, to Stephen Rothblatt, Chief, Regulation Development Branch, Region 5, USEPA.

[58 FR 17783, Apr. 6, 1993]

§52.744 Small business stationary source technical and environmental compliance assistance program.

The Illinois program submitted on November 12, 1992, as a requested revision to the Illinois State Implementation Plan satisfies the requirements of section 507 of the Clean Air Act Amendments of 1990.

[58 FR 45451, Aug. 30, 1993]

Subpart P—Indiana

§52.769 Identification of plan—conditional approval.

The plan revision commitment listed in paragraphs (a) and (b) of this section were submitted on the dates specified.

(a) On February 25, 1994, Indiana submitted a revision to the definition of Volatile Organic Compound (VOC) in two parts as amendments to Title 326 of the Indiana Administrative Code (326 IAC) 1–2–48 (for nonphotochemically reactive hydrocarbon) and 1–2–90 (for VOC). The United States Environmental Protection Agency (USEPA) is conditionally approving the State's VOC definition, contingent on fulfillment of the State's commitment to adopt and submit a State Implementation Plan revision that would eliminate provisions which exclude vegetable oil from the State's definition of VOC by May 6, 1996. If the State fails to meet its commitment by the date listed above, the USEPA's conditional approval will automatically become a disapproval without further regulatory action.

(1) Incorporation by reference.

(i) (A) 326 IAC 1–2–48 Nonphotochemically reactive hydrocarbon definition and 1–2–90 Volatile Organic Compound definition. Filed with the Secretary of State, August 9, 1993, effective September 8, 1993, Published at Indiana Register, Volume 16, Number 12, September 1, 1993.

(b) On February 25, 1994, Indiana submitted an amendment to Title 326 of the Indiana Administrative Code (326 IAC) 8–5–5 to add Volatile Organic Compound (VOC) Reasonably Available Control Technology (RACT) requirements for graphic arts facilities in the Indiana severe ozone nonattainment area (Lake and Porter Counties) which have the potential to emit 25 tons per year or more of VOC. The United States Environmental Protection Agency (USEPA) is conditionally approving the State's graphic arts facilities VOC RACT rule, contingent on fulfillment of the State's commitment to

adopt and submit a State Implementation Plan (SIP) revision that would correct deficiencies in the State's recordkeeping and reporting requirements, contained in 326 IAC 8–1–2, by May 6, 1996. In order to correct the deficiencies, the State must meet three requirements.

The first requirement is for the monitoring, recordkeeping and reporting (MRR) requirements in the Indiana rules to be made more comprehensive to include more than: Daily volume-weighted averages of all coatings applied in a coating or printing line; and records of daily usage of gallons of solids coating and VOC content for each coating or ink solvent. Alternatively, when a source complies by using control devices, then records of monitoring parameters and other information must also be kept. The MRR requirements should also specify a period of time (i.e., 5 years) during which records shall be maintained at the facility. The second requirement is for the Indiana rules to be revised to require maintenance of records and reports of new or existing control devices. Records and reports that should be maintained include monitoring data, calibration and maintenance logs, and logs of operating time. The third requirement is for the Indiana rules to be revised to require the maintenance of records and reports for exempt sources such as: Information pertaining to the initial certification, calculations demonstrating that total potential emissions of VOC from all flexographic and rotogravure printing presses at the facility will be less than the required limits for each year, the maintenance of record for a period of 5 years, and the requirement that any exceedance will be reported to the Administrator within 30 days after the exceedance occurs. Exempt sources should calculate: Yearly potential emissions, yearly actual emissions, and the name, identification, VOC content, and yearly volume of coatings/inks. If the State ultimately fails to meet its commitment to meet these requirements by the date listed above, then USEPA's action for the State's requested SIP revision will automatically convert to a final disapproval without further regulatory action.

(1) Incorporation by reference.

(i) (A) 326 IAC 8–5–5 Graphic arts operations. Filed with the Secretary of State, August 9, 1993, effective September 8, 1993, Published at Indiana Register, Volume 16, Number 12, September 1, 1993.

[60 FR 22241, 22242, May 4, 1995]

§ 52.770 Identification of plan.

(a) Title of plan: ''State of Indiana Air Pollution Control Implementation Plan.''

(b) The plan was officially submitted on January 31, 1972.

(c) The plan revisions listed below were submitted on the dates specified.

(1) The State Air Pollution Control Board submitted a SO_2 control strategy for the City of Indianapolis on March 16, 1972.

(2) The Governor submitted Pub. L. 100, Regulation APC 12–R and 13 through 17 on April 11, 1972.

(3) On May 1, 1972, the Governor's office submitted an errata sheet and revised pages for the State plan.

(4) A request for a nine month extension to achieve secondary SO_2 standards in the Indianapolis Region was made by the Governor on May 16, 1972.

(5) The State Air Pollution Control Board submitted additional information on surveillance methodology (non-regulatory) on May 17, 1972.

(6) Regulation APC 4–R was transmitted by the Governor on June 30, 1972.

(7) Assurance that emission data for sources was available for public inspection was given on July 24, 1972, by the Technical Secretary to the Indiana Board.

(8) Clarification of a policy on availability of emission data to the public sent August 17, 1972, by the Technical Secretary to the Indiana Board.

(9) On September 15, 1972, amendments to State control regulations 13, 15 and 16 were submitted to the Governor.

(10) On May 8, 1973, the Governor submitted a new regulation (APC–19) which replaced APC–1.

(11) The Governor submitted a transportation control plan for Marion County on October 19, 1973.

(12) On March 7, 1974, the Technical Secretary of the Air Pollution Control Board, acting for the Governor of Indiana, submitted new regulation APC–20.

(13) On October 3, 1974, the Technical Secretary submitted revised regulations APC–16 covering CO, APC–17 covering NO_2 and a new regulation APC–22 covering classification of counties for SO_2, oxidants, particulates, NO_2 and CO.

(14) On November 8, 1974, the Technical Secretary submitted revised regulation APC–3 covering visible emissions and revised regulation APC–15 covering hydrocarbons.

(15) On December 5, 1974, the Technical Secretary submitted revised regulation APC–13 covering SO_2. On July 18, 1975, an updated Technical Support Document on APC–13 was submitted by the Technical Secretary.

(16) On June 14, 1976, the Technical Secretary submitted enforcement orders varying the final sulfur dioxide emission limitations for the Warrick and Culley electrical generating stations in Warrick County.

(17) On March 16, 1977, the Technical Secretary submitted new regulation APC–8, Continuous Emission Monitoring; and revised regulations APC–7, Incinerators; and APC–14, Indiana Ambient Air Quality Standards.

(18) On May 18, 1977, the Technical Secretary submitted revised regulation APC–2, Open Burning.

(19) On June 26, 1979, the Governor submitted a revised sulfur dioxide strategy, including regulation APC 13 with appendix, which was promulgated by the State on June 19, 1979 for all areas of the State. This included the Part D sulfur dioxide regulations for Lake, LaPorte, and Marion Counties. On August 27, 1980 and July 16, 1981 the State committed itself to correct conditionally approved items within their strategy. On October 6, 1980, the State submitted a recodified version of APC 13 which was promulgated by the State on August 27, 1980. This included 325 IAC 7, 325 IAC 1.1–6, 325 IAC 1.1–7–2 and 4, 325 IAC 12–5–1 and 2(a), 325 IAC 12–9–1 and 4, and 325 IAC 12–18–1 and 2. EPA is not taking action on: (i) 325 IAC 7 as it applies to Floyd and Vigo Counties, (ii) the 30-day averaging compliance method contained in 325 IAC 7–1–3, and (iii) the stack height provision for NIPSCO's Mitchell Station in the Lake County SO_2 strategy and (4) the stack height provisions for IPALCO's Stout Generating Chemicals Company, and Detroit Diesel Allison's Plant #8 in the Marion County SO_2 strategy.

(20) On June 26, 1979, the State of Indiana submitted to EPA revisions to the ozone and carbon monoxide portions (section 3.3.24) of its Marion County State Implementation Plan. On March 11, 1980, the state submitted revisions to the Marion County technical appendix to section 3.3.24. On May 19, 1980, the state submitted ozone and carbon monoxide attainment demonstrations for Marion County (section 1.5). On September 8, 1980 the state submitted its memoranda of understanding. On October 9 and October 15, 1980, the state submitted documentation concerning interagency coordination and the analysis of transportation control measures. On January 7, 1981, the state submitted corrections and clarifications in response to EPA's notice of proposed rulemaking (45 FR 81070).

(21) On June 26, 1979 Indiana submitted a motor vehicle inspection and maintenance program for Clark, Floyd, Lake, and Porter Counties. Additional commitments were submitted on April 7, 1980; June 12, 1980; August 27, 1980; November 13, 1980 and November 24, 1980.

(22) On June 26, 1979, Indiana made submittals pertaining to section 121 Consultation, section 110(a)(2)(K)—Permit Fees, section 126—Interstate Pollution, section 127—Public Notification, section 128—State Boards and section 110(a)(2)(F) (ii) and (iii)—Continuous Emission Monitoring Additional commitments were secured on April 17, 1980, June 25, 1980, August 1, 1980, November 10, 1980, December 9, 1980, and December 31, 1980. A revised version of Indiana's continuous emission monitoring regulation (325 IAC 3) was submitted on October 6, 1980.

(23) On June 26, 1979, the State of Indiana submitted a revision to provide for modification of the existing air quality surveillance network.

(24) On June 26, 1979, the Governor submitted a revised new source review

regulation, APC–19. Additional information and commitments were submitted on June 25, 1980 and May 19, 1981. EPA is not taking action on section 7 of APC–19, Prevention of Significant deterioration.

(25) On June 26, 1979 the Governor submitted revised emission limits for Knauf Fiberglass, Shelby County. Additional information was submitted by November 21, 1979. The emission limitations were recodified as 325 IAC 11–4 and 11–4 Appendix A and were resubmitted on October 6, 1980.

(26) On June 26, 1979 the Governor submitted Indiana's definition regulation, APC–1. The definitions were recodified as 325 IAC 1.1–1 and resubmitted on October 6, 1980. On January 21, 1981 Indiana submitted a revised definition for ''positive net air quality benefit.'' EPA is taking no action on 325 IAC 1.1–1–82, definition of ''State Implementation Plan (SIP).''

(27) On October 6, 1980, Indiana submitted Regulation 325 IAC 1.1–2 (formerly APC 14) which includes the primary and secondary ambient air quality standards for ozone and lead.

(28) On February 26, 1981, Indiana submitted a revision to its plan waiving the State's sulfur dioxide air monitoring requirement of section 4(a) of Regulation 325 IAC 7–1 for the area around Public Service of Indiana's Noblesville Generating Station.

(29) On June 26, 1979, May 19, 1980, September 24, 1980, October 9, 1980 and October 15, 1980, Indiana submitted transportation control plans and ozone demonstrations of attainment for Lake, Porter, Clark, Floyd, St. Joseph, Elkhart and Allen Counties. It also submitted a carbon monoxide demonstration of attainment for Lake County. EPA is taking no action on the ozone demonstration of attainment for St. Joseph, Elkhart and Allen Counties.

(30) On April 10, 1981, Indiana submitted revised emission limits for Indiana Farm Bureau Cooperative Association's Beech Grove plant.

(31) On February 11, 1980, Indiana submitted a revised sulfur dioxide strategy for Vigo County. Technical information was submitted on December 10, 1979 and on May 30, 1980. On October 6, 1980, the State submitted a recodified version of the Vigo County Regulations, 325 IAC Article 7, which was promulgated by the State on August 27, 1980. EPA is not taking action on the 30-day averaging compliance method contained in 325 IAC 7–1–3 as it applies to Vigo County.

(32) On November 24, 1981, Indiana submitted site specific emission limitations for Tecumseh Pipe Line Company, Schererville; and Wayne Transportation Division, Richmond.

(33) On February 11, 1980, Indiana submitted APC 15. EPA is taking no action the ''bubble'' provisions contained in Section 8(a)(2) of revised APC 15.

(34) On June 26, 1979, the Governor of Indiana submitted general TSP RACT emisson limits for nonattainment areas. These regulations were amended and recodified as 325 IAC 6–1 and resubmitted on October 6, 1980. On October 6, 1980, the State submitted a revised TSP regulation for process sources, 325 IAC 6–3; a source specific Dearborn County strategy (amendments were submitted on August 10, 1981), 325 IAC 6–1–8; a source specific Dubois County strategy, 325 IAC 6–1–9; and a source specific Wayne County strategy (amendments were submitted on January 29, 1981), 325 IAC 6–1–14. On February 11, 1980, Indiana submitted a source specific Marion County strategy (amendments were submitted on October 28, 1981), 325 IAC 6–1–12. EPA is deferring rulemaking at this time on the coke battery emission limitations in the Marion County strategy. On January 29, 1981, the State submitted a source specific Vigo County strategy (amendments were submitted on October 28, 1981 and May 7, 1982), 325 IAC 6–1–13; a source specific Howard County strategy, 325 IAC 6–1–15; and a source specific Vanderburgh County strategy (amendments were submitted on October 28, 1981), 325 IAC 6–1–16. EPA is deferring rulemaking at this time on the coke battery emission limitations in the Vigo County strategy and on whether the Howard County strategy currently contains all the elements required by the Clean Air Act. On July 8, 1981, the State submitted a source specific Clark County strategy, 325 IAC 6–1–17, and a source specific St. Joseph County strategy, 325 IAC 6–1–18. On January 29, 1981 and May 7, 1982, the

State submitted additional information and commitments.

(35) On October 6, 1980, Indiana submitted its regulations as recodified. Amendments were submitted on January 29, 1981 and March 18, 1981. EPA's approval is directed specifically to the codification numbering system change, not to the substance within each of the codified rules.

(36) [Reserved]

(37) On May 10, 1982, Indiana submitted source specific emission limits contained in operating permits for the Bunge Corporation, Globe Industries, Skyline Corporation, and Dubois County Farm Bureau Co-op Assn., Inc. as revisions to the Indiana SIP.

(38) On April 27, 1982, Indiana submitted source specific TSP emission limits for Huntingburg Wood Products, Jasper Desk Company, Jasper Office Furniture Company, Arist-O-Kraft Company, Mohr Construction Company, Dana Corporation, and Allis Chalmers Corporation. On April 29, 1982, Indiana submitted source specific VOC emission limits for McGee Refining Corporation, Hesco Industries, and Clark Oil and Refining Corporation.

(39) On November 25, 1980, Indiana submitted 325 IAC Article 8, Volatile Organic Compound Regulations. This regulation adds Group II CTG requirements to Indiana's VOC plan and was State promulgated on October 15, 1980. EPA is not taking action on 325 IAC 8–1.1 Section 2(b), Bubble Approach.

(40) On November 24, 1981, Indiana submitted site specific emission limitations for Jeffboat, Inc., Jeffersonville.

(41) On November 23, 1982, Indiana submitted source-specific emission limits for Paul H. Rohe Company, Inc.

(42) On June 26, 1979, Indiana submitted its coke oven battery regulation, APC 9. On October 6, 1980 Indiana resubmitted this regulation recodified as 325 IAC 11–3. On August 27, 1981, Indiana submitted amendments to 325 IAC 11–3. EPA is taking no action on 325 IAC 11–3–2(a), Pre-Carbonization Emissions. It is taking no action on 325 IAC 11–3–2(i), Underfire Particulate and Sulfur Dioxide Emissions, as it applies to Lake County.

(43) On February 26, 1981 and June 22, 1982, Indiana submitted a 9.57 lbs/MMBTU sulfur dioxide emission limit for IMEC's Breed Generating Station in Sullivan County. This limit supersedes that approved at paragraph (c)(19).

(44) On June 28, 1982, Indiana submitted new open burning regulations for Marion County. An amendment was submitted on August 25, 1982.

(45) On March 15, 1983, Indiana submitted a revision to the TSP and SO_2 portions of its SIP in the form of operating permits for the Sisters of Providence Convent in St. Mary-of-the-Woods, Indiana.

(46) On November 29, 1982, and December 9, 1982, Indiana submitted amendments to 325 IAC 11–4, Fiber Glass Insulation Manufacturing (Superfine Process) Limitations.

(47) On August 17, 1983, Indiana submitted emission limits of 1.8 lbs/hr and 2.4 tons/yr for the boilers at Jasper Cabinet Co., Dubois County. The 1.8 lbs/hr limit replaces the 7.6 lbs/hr limit approved for this source in subparagraph 34.

(48) [Reserved]

(49) On March 28, 1983, Indiana submitted a 20% 2-hour opacity limit as an ''equivalent visible emission limit'' (EVEL) for the underfire stack at Bethlehem Steel Corporation's Coke Battery No. 2 in Porter County. This EVEL is approved for as long as the SIP mass emission limit determined from 325 IAC 6–2 (October 6, 1980, submittal) for this source remains in the SIP See (c)(6), (35), and (42).

(50) On December 21, 1983, the Indiana Air Pollution Control Board submitted Indiana Rule 325 IAC 6–2.1, Particulate Emission Limitations for Sources of Indirect Heating. This rule repeals and replaces Indiana Rule 325 IAC 6–2. See §§52.770(c)(4) and (c)(35) and §52.776(i).

(i) Incorporation by reference.

(A) 325 IAC 6–2.1, revised regulation establishing Particulate Emission Limitations for Sources of Indirect Heating.

(ii) Additional material.

(A) December 21, 1983, submittal of Finding of Facts and Recommendations of Hearing Officer R. W. James on 325 IAC 6–2.1.

(B) March 27, 1985, commitment letter from the State concerning the procedures the State will use in processing ''bubbles'' under 325 IAC 6–2.1–2(B) and 3(b). See §52.776(i).

(51) On February 7, 1983, Indiana submitted revised opacity limits for existing boilers at Olin Corporation, located in Covington, Indiana. These ''equivalent visible emission limits'' (EVEL) are approved for as long as the SIP mass emission limit determined from 325 IAC 6–2 (October 6, 1980 submittal) for this source remains in the SIP. See § 52.770(c) (6) and (35) and § 52.776(h)(2).

(i) Incorporation by reference.

(A) EVELs for Olin Corporation contained in Operating Permits issued by IAPCB, dated October 6, 1981.

(ii) Additional material.

(A) September 1, 1983, transmittal by IAPCD's A. Sunderland of Olin's Mass Emission Tests, dated August 26, 1983.

(B) April 5, 1984, letter from IAPCD's E. Stresino transmitting original petition, including Method 9 opacity data.

(52) On February 23, 1984, the Indiana Air Pollution Control Board submitted a revision to Indiana's SO_2 SIP waiving the self-monitoring requirement for Public Service Indiana's Edwardsport Generating Station, as set forth in section 4(a) of Rule 325 IAC 7–1. See (c)(19). This revision becomes effective once the Edwardsport Station achieves an annual operating capacity of no greater than 10%.

(53) On October 6, 1980, Indiana submitted revised opacity regulation 325 IAC 5–1. It replaces 1972 APC 3 for process sources, approved at paragraph (b), and SIP 1974 APC 3 for combustion sources, approved in part at subparagraph (c)(14). Indiana does not intend 325 IAC 5–1 to regulate the emission points in Lake County listed in Table 2 of 325 IAC 6–1–110.2 (subparagraph (c)(57)). USEPA is disapproving 325 IAC 5–1 for these sources. Indiana does not intend 325 IAC 5–1 to regulate certain coke battery emission sources listed in 325 IAC 11–3 (subparagraph (c)(42)). USEPA is disapproving 325 IAC 5–1 as it applies to the provisions of 325 IAC 11–3 which USEPA disapproved at (c)(42), i.e., pushing and quenching sources throughout the State and coke oven doors in Lake and Marion Counties. Additionally, Indiana has modified 325 IAC 5–1 as it applies to the stack emission points in Porter County listed at 325 IAC 6–6–4. USEPA disapproved 325 IAC 5–1 as it applies to these Porter County sources on February 5, 1987 (52 FR 3640). For those source categories where USEPA is disapproving 325 IAC 5–1, they remain regulated by the previously approved opacity SIP which consists of SIP 1974 APC 3 for combustion sources and 1972 APC 3 for process sources. Additionally, as long as the Bethlehem Steel Corporation No. 2 Coke Oven Battery Underfire Stack EVEL (subparagraph (c)(49)) remains approved, it replaces 325 IAC 5–1.

(i) Incorporation by reference.

(A) A letter dated October 6, 1980 from the State of Indiana Air Pollution Control Board and 325 IAC 5–1, Visible Emission Limitations, State promulgated on August 26, 1980.

(ii) Additional material.

(A) February 12, 1985, letter from the Technical Secretary of the Air Pollution Control Board committing the State to make certain technical changes to 325 IAC 5–1.

(54) On March 28, 1984, Indiana submitted a revised TSP emission limitation for Richmond State Hospital, Wayne County, Indiana. This limitation replaces the one in 325 IAC 6–1–14 which was previously approved at (c)(34).

(i) Incorporation by reference.

(A) On January 13, 1984, Indiana issued to Richmond State Hospital an amendment to operating permit, 89–04–85–0153, which revised its TSP emission limitations for the four boilers to 0.60 lbs/MMBTU with an annual total limit of 452 tons/yr.

(55) On January 30, 1985, Indiana submitted revised VOC regulations 325 IAC 8–1.1, 8–2, 8–3, 8–4 and 8–5 to satisfy certain conditions of USEPA's approval. Those regulations amended those approved at (c)(33) and (c)(34). In addition, the applicability of the regulations was extended to cover St. Joseph and Elkhart Counties. USEPA is taking no action on changes to 325 IAC 8–1.1–2(f), Methods of Compliance, and the repeal of 325 IAC 8–5–6, Perchloroethylene Dry Cleaning, because these exempt the compound perchloroethylene from control without the State justifying that such exemption is consistent with the Part D reasonably available control technology (RACT) requirements.

NOTE: If Indiana allows use of a non-USEPA test method in the future, its use

must be submitted to USEPA as a SIP revision.

(i) Incorporation by reference.

(A) Indiana's Volatile Organic Compounds (VOC) RACT I and II regulations, Title 325 Air Pollution Control Board:

(*1*) 325 IAC 8–1.1, Establishes Volatile Organic Compound Emission Limitations. State promulgated on June 21, 1984, and amended November 7, 1984.

NOTE: 325 IAC 8–1.1–4 Test methods and procedures. If Indiana allows use of a non-USEPA test method in the future, its use must be submitted to USEPA as a SIP revision.

(*2*) 325 IAC 8–2 Surface Coating Emission Limitations. State promulgated on June 21, 1984, and amended November 7, 1984.

(*3*) 325 IAC 8–3 Solvent Metal Cleaning Operating Requirements. State promulgated on October 15, 1984, and amended November 7, 1984.

(*4*) 325 IAC 8–4 Petroleum Sources. State promulgated on June 21, 1984, and amended November 7, 1984.

(*5*) 325 IAC 8–5 Miscellaneous Operations. State promulgated on June 21, 1984, and amended November 7, 1984.

(56) On September 2, 1983, the Indiana Air Pollution Control Board (Board) submitted revised emission limitations for Occidental Chemical Corporation (OCC), located in Clark County, Indiana. Amendments to these operating permits were submitted by the State on December 21, 1983. These emission limits replace those approved for OCC (under its former name, Hooker Chemical) at (c)(34).

(i) Incorporation by reference.

(A) Indiana Air Pollution Control Board Operation Permits:

(*1*) Control Number 16113, date issued December 27, 1982.

(*2*) Control Number 16114, date issued December 27, 1982.

(*3*) Control Number 16115, date issued December 27, 1982.

(ii) Additional material.

(A) OCC corrected emissions dated September 13, 1984.

(B) OCC's new modeled data, dated November 6, 1984.

(C) State's modeling for OCC and surrounding area, dated July 2, 1984 and August 7, 1984.

(57) On October 11, 1983, October 24, 1983, and April 16, 1984, Indiana submitted a revised Lake County Total Suspended Particulates (TSP) Plan, including regulations 325 IAC 6–1–10.2 and 6–1–11.1. This plan is disapproved. See §52.776(j).

(58) On November 13, 1984, Indiana submitted 325 IAC 13–2, Motor Vehicle Tampering and Fuel Switching.

(i) Incorporation by reference.

(A) Indiana Rule 325 IAC 13–2, promulgated by the State on September 24, 1984.

(59) On March 24, 1986, the State of Indiana submitted a negative declaration for synthetic organic chemical manufacturing industry (SOCMI) source leaks and oxidation, and for natural gas/gasoline processing plants. On April 14, 1986, the State of Indiana submitted a negative declaration for manufacturers of high-density polyethylene, polypropylene, and polystyrene resins, and for large petroleum dry cleaners.

(i) Incorporation by reference.

(A) Letter dated March 24, 1986, from Harry D. Williams, Director, Air Pollution Control Division, Indiana State Board of Health. Letter dated April 14, 1986, from Walter J. Kulakowski, Assistant Commissioner for Air Management, Department of Environmental Management.

(60) On January 18, 1984, Indiana submitted as a revision to the TSP SIP certain operating conditions and limits for three coke oven batteries at Citizens Gas and Coke Utility in Marion County. The operating permits included conditions and limits for Batteries E, H and Number One with respect to visible emissions from coke oven doors and pushing operations and allowable content of total dissolved solids in quench makeup water. EPA disapproves the limit on coke oven door visible emissions and total dissolved solids content for quench makeup water on Battery Number One, because the limits are inconsistent with that battery's Part C Prevention of Significant Deterioration requirements and Part D Lowest Achievable Emission Rate requirements. See subparagraphs (c)(34) and (c)(42) for further background on actions concerning coke oven batteries.

(i) Incorporation by reference.

(A) Certificates of Operation Numbers 06895, 06896, and 06897 for Citizens Gas and Coke Utility issued by the City of Indianapolis, dated June 30, 1980, with addition of operating conditions and emission limits, dated September 12, 1983, as adopted by the State on January 4, 1984, and transmitted on January 18, 1984.

(ii) Additional information.

(A) September 7, 1983, letter from the City of Indianapolis to the State concerning quarterly analysis of coke quenching makeup water.

(61) On October 15, 1984, Indiana submitted a revision to the Porter County total suspended particulate (TSP) plan, including regulation 325 IAC 6–6, which was promulgated by Indiana on November 7, 1984. This plan is disapproved. See § 52.776(l).

(62) On March 4, 1985, Indiana submitted a revision to the Marion County carbon monoxide (CO) plan. USEPA approved this plan based on monitoring and modeling data and a commitment to implement a one-way street pair in the Indianapolis central business district. These elements demonstrate attainment of the CO National Ambient Air Quality Standards by December 31, 1987.

(i) Incorporation by reference.

(A) Marion County CO plan for attainment and maintenance of the CO NAAQS from Indianapolis Air Pollution Control Division, Sections 1.0, 3.4, 4.1, 4.2, 4.3.1, 4.3.2, 4.4, 5.1, 5.5.4, 6.1, 6.2.1, 6.2.2, 6.3, and 6.4, dated November 12, 1984.

(B) Letter from Indiana forwarding Marion County CO plan to USEPA, dated March 4, 1985.

(ii) Additional material.

(A) Portion of additional technical information from Indianapolis Air Pollution Control Division, including Section 1.0, dated August 28, 1985.

(B) Letter from Indiana forwarding additional technical information, dated October 7, 1985.

(63) On January 23, 1986, the State submitted revisions to its Stage I Gasoline Dispensing regulations, which replace those conditionally approved at (c)(33), (c)(35)—Codification only, and (c)(55).

(i) Incorporation by reference.

(A) Letter of January 23, 1986 to EPA from the State of Indiana, and Title 325 Air Pollution Control Board Rule 325 IAC 8–4–6, Gasoline Dispensing Facilities, which was promulgated on January 14, 1986.

(B) Title 325 Air Pollution Control Board Rule 8–1.1–3, Compliance Schedules, subsections (f), (g), and (h), which was promulgated on January 14, 1986.

(64) On January 23, 1986, the State of Indiana submitted to USEPA a revision to the Indiana Lead State Implementation Plan in order to satisfy the requirements of 40 CFR 51.160 through 51.163 and 51.165(b) (formerly 40 CFR 51.18 (a) through (i) and 51.18(k)) for a new source review program, USEPA approved this revision for lead new source review only.

(i) Incorporation by reference.

(A) Construction and Operating Permit Requirements, 325 IAC 2–1.1 promulgated on January 8, 1986.

(B) Letter of November 17, 1987, to EPA from the Indiana Department of Environmental Management.

(65) On November 30, 1981, Indiana established its air quality surveillance network for lead. On November 21, 1983, Indiana notified USEPA that Corning Glass was shut down. On February 18, 1987, Indiana submitted its regulation to control lead emissions, 325 IAC 15–1.

(i) Incorporation by reference.

(A) 325 IAC 15–1, Lead Emission Limitations, effective February 27, 1987.

(B) Letter of February 18, from the State of Indiana to EPA.

(ii) Additional material.

(A) A November 30, 1981, letter from Harry Williams, Technical Secretary, Indiana Air Pollution Control Board establishing Indiana's air quality surveillance network for lead.

(B) A November 21, 1983, letter from Harry Williams, Technical Secretary, confirming that the Corning Glass facility in Wells County was permanently shut down and had been taken out of the State's emission inventory.

(C) A June 9, 1987, letter from Timothy Method, Acting Assistant Commissioner, submitting a general strategy and additional increments of progress required of Hammond Lead.

(66) On October 21, 1987, the State of Indiana submitted 325 IAC 7–1–3.1, Reporting Requirements and Methods to

Determine Compliance, as a revision to its SO_2 plan. At paragraph (c)(19) of this section, USEPA approved/conditionally approved Indiana's SO_2 plan, 325 IAC 7-1, for most areas of the State. However, the emission limits in this plan were set aside by the Court of Appeals for the Seventh Circuit because USEPA took no action on the State's 30-day averaging compliance method in 325 IAC 7-1-3. New compliance method 325 IAC 7-1-3.1 replaces former 325 IAC 7-1-3. Therefore, with EPA's approval of 325 IAC 7-1-3.1, USEPA is reinstating its March 12, 1982, approval of Indiana's October 6, 1980, SO_2 rule, 325 IAC 7-1-1,7-1-2 (except for any emission limits in the below named counties), 7-1-4, 7-1-5, 7-1-6, and 7-1-7. Other than these general provisions and 325 IAC 7-1-3.1, USEPA is not acting on or approving today Indiana's SO_2 plan for Dearborn, Floyd, Gibson, Jefferson, Lake, LaPorte, Marion, Morgan, Porter, Sullivan, Vermillion, Vigo, Warrick, and Wayne Counties. Indiana recodified 325 IAC 7-1-1 through 7-1-7 to 326 IAC 7-1-1 through 7-1-7 and submitted the recodified rules on November 16, 1988.

(i) Incorporation by reference.

(A) 326 IAC 7-1-1 through 326 7-1-7, Sulfur Dioxide Emission Limitations, as published in the April 1, 1988, *Indiana Register* (IR) at 11 IR 2511.

(67) On February 3, 1988, Indiana submitted its SO_2 plan for Jefferson, LaPorte, Marion, Sullivan, and Wayne Counties; on March 23, 1988, it submitted its SO_2 plan for Vermillion County; and on August 1, 1988, it submitted its SO submitted the same rules in its plans for Jefferson, LaPorte, Marion, Sullivan, and Wayne Counties, as recodified into Title 326 of the Indiana Administrative Code. These plans consist of the provisions and requirements in 326nIAC 7-1 approved or reinstated for these counties at paragraph (c)(66), any SO_2 emission limits in 326 IAC 7-1-2 applicable in these counties (as incorporated by reference at (c)(66)(i)(C)), and the site-specific SO_2 emission limits and other requirements in 326 IAC 7-1-13 (Jefferson County), 326 IAC 7-1-12 (LaPorte County), 326 IAC 7-1-9 (Marion County), 326 IAC 7-1-14 (Sullivan County), 326 IAC 7-1-15 (Vermillion County), 326 IAC 7-1-10.1 (Vigo County), and 326 IAC 7-1-11 (Wayne County).

(i) Incorporation by reference.

(A) 326 IAC 7-1-13, Jefferson County Sulfur Dioxide Emission Limitations, as published in the April 1, 1988, *Indiana Register* (IR) at 11 IR 2526.

(B) 326 IAC 7-1-12, LaPorte County Sulfur Dioxide Emission Limitations, as published on April 1, 1988, at 11 IR 2526.

(C) 326 IAC 7-1-9, Marion County Sulfur Dioxide Emission Limitations, as published on April 1, 1988, at 11 IR 2518.

(D) 326 IAC 7-1-14, Sullivan County Sulfur Dioxide Emission Limitations, as published on April 1, 1988, at 11 IR 2526.

(E) 326 IAC 7-1-15, Vermillion County Sulfur Dioxide Emission Limitations, as published on March 1, 1988, at 11 IR 1735.

(F) 326 IAC 7-1-10.1, Vigo County Sulfur Dioxide Emission Limitations, as published on August 1, 1988, at 11 IR 3785.

(G) 325 IAC 7-1-11, Wayne County Sulfur Dioxide Emission Limitations, as published on April 1, 1988, at 11 IR 2525.

(68) On December 2, 1983, Indiana submitted its transportation control plans as an element in its ozone strategy for Lake and Porter Counties. Further information was submitted on June 10, 1986.

(i) Incorporation by reference. (A) Chapter 7, Mobile Source Strategies and Reductions, Sections A.1.a, 2, and 3 and Exhibits 7-1 and 7-3 of Indiana's 1982 ozone and carbon monoxide plan, as adopted by the Indiana Air Pollution Control Board at its November 2, 1983, metting.

(B) [Reserved]

(ii) Additional material. (A) On June 10, 1986, Indiana submitted a May 23, 1986, letter from the Northwestern Indiana Regional Planning Commission discussing the Lake and Porter Counties' transportation control plans and their implementation.

(B) [Reserved]

(69) On December 2, 1983, Indiana submitted its ozone plan for Lake and Porter Counties, as adopted by the Indiana Air Pollution Control Board on November 2, 1983. On March 2, 1984, Indiana submitted as its attainment demonstration for Lake and Porter Counties, Illinois' attainment demonstration for the greater Chicago area. The

greater Chicago attainment demonstration, as submitted by Indiana, and Indiana's overall ozone plan for Lake and Porter Counties is disapproved. See §§ 52.773(i) and 52.777(d). The disapproval does not affect USEPA's approval (or conditional approval) of individual parts of Indiana'a ozone plan, and they remain approved. See § 52.770(c) (20), (21), (29), (33), (38), (39), (55), (58), and (59).

(70) On February 3, 1988, and August 23, 1988, Indiana submitted its lead plans for Quemetco, Inc., in Indianapolis; Exide Corporation in Logansport; C and D Power System in Attica; and General Battery Corporation in Frankfort. This included a recodification of its former lead rule, 325 IAC 15-1 (40 CFR 52.770(c)(65)), to 326 IAC 15-1 and revisions to this rule.

(i) Incorporation by reference.

(A) Title 326—Air Pollution Control Board—Indiana Administrative Code (326 IAC) 15-1, Lead Emission Limitations, as published in the *Indiana Register* (IR) on April 1, 1988, at 11 IR 2564.

(B) Corrections of typographical, clerical, or spelling errors to the document printed at 11 IR 2368 (Indiana's recodified air rules, including 326 IAC 15-1), as published on August 1, 1988, at 11 IR 3921.

(71) On March 23, 1988, Indiana submitted its SO_2 plan for Morgan County; on July 12, 1988, it submitted its SO_2 plan for Floyd County, and on November 16, 1988, it submitted its SO_2 plan for Warrick County. On December 6, 1988, it submitted its Warrick County rule as published in the *Indiana Register*. These plans consist of the provisions and requirements in 326 IAC 7-1 approved or reinstated for these counties at paragraph (c)(66), and SO_2 emission limits in 326 IAC 7-1-2 applicable in these counties (as incorporated by reference at paragraph (c)(66)(i)(C) of this section), and the site-specific SO_2 emission limits and other requirements in 326 IAC 7-1-16 (Floyd County), 326 IAC 7-1-18 (Morgan County), and 326 IAC 7-1-17 (Warrick County).

(i) Incorporation by reference.

(A) 326 IAC 7-1-16, Floyd County Sulfur Dioxide Emission Limitations, as published in the March 1, 1988, *Indiana Register* (IR) at 11 IR 1737.

(B) 326 IAC 7-1-18, Morgan County Sulfur Dioxide Emission Limitations, as published on June 1, 1988, at 11 IR 3018.

(C) 326 IAC 7-1-17, Warrick County Sulfur Dioxide Emission Limitations, as published on December 1, 1988, at 12 IR 553.

(72) On November 16, 1988, Indiana submitted its SO_2 plan for Dearborn County; on July 12, 1988, it submitted its SO_2 plan for Gibson County; on November 16, 1988, and December 6, 1988, it submitted its SO_2 plan for Lake County, and on November 16, 1988, and December 6, 1988, it submitted its SO_2 plan for Porter County. These plans consist of the provisions and requirements in 326 IAC 7-1 approved or reinstated for these counties at paragraph (c)(66), any SO_2 emission limits in 326 IAC 7-1-2 applicable in these counties (as incorporated by reference at paragraph (c)(66)(i)(C) of this section, and the site-specific SO_2 emission limits and other requirements in 326 IAC 7-1-20 (Dearborn County), 326 IAC 7-1-8.1 (Lake County), 326 IAC 7-1-19 (Gibson County), and 326 IAC 7-1-21 (Porter County).

(i) Incorporation by reference.

(A) 326 IAC 7-1-20, Dearborn County Sulfur Dioxide Emission Limitations, as published in the August 1, 1988, *Indiana Register* (IR) at 11 IR 3784.

(B) 326 IAC 7-1-19, Gibson County Sulfur Dioxide Emission Limitations, as published on June 1, 1988, at 11 IR 3019.

(C) 326 IAC 7-1-8.1, Lake County Sulfur Dioxide Emission Limitations, as published on November 1, 1988, at 12 IR 262, and corrected on December 1, 1988, at 12 IR 597.

(D) 326 IAC 7-1-21, Porter County Sulfur Dioxide Emission Limitations, as published on November 1, 1988, at 12 IR 259, and corrected on December 1, 1988, at 12 IR 597.

(E) 326 IAC 7-1-1, Applicability, as published on December 1, 1988, at 12 IR 552.

(73) [Reserved]

(74) On July 23, 1987, the Indiana Department of Environmental Management submitted to USEPA a request for a site-specific revision to Indiana's ozone SIP. This revision consists of

compliance date extensions until November 7, 1987, for Uniroyal's two fabric coaters and four vinyl printers at its Mishawaka plant, located in St. Joseph County, Indiana.

(i) Incorporation by reference.

(A) Air pollution Operation Permits Numbers: U 2 33–15A, U 2 34–23, U 2 33–14C, U 2 34–3C, U 2 33–16, U 2 33–18, Date issued December 1, 1988, and Date Expires December 1, 1990.

(75) [Reserved]

(76) On October 21, 1987, the State submitted 325 IAC 8–1.1–5, Petition for alternative controls, which gives the provisions and requirements for petitioning for reasonably available control technology volatile organic compound plans. On November 16, 1988, the State submitted this rule recodified as 326 IAC 8–1–5, Petition for site-specific reasonably available control technology (RACT) plan.

(i) Incorporation by Reference

(A) Title 326 Air Pollution Control Board, Indiana Administration Code (IAC) 8–1–5, Petition for site-specific reasonably available control technology (RACT) plan, as published in the April 1, 1988, *Indiana Register,* at Volume 11 IR 2530. Filed with the Secretary of State on March 10, 1988.

(77) [Reserved]

(78) On January 18, 1989, and June 23, 1989, Indiana submitted its revised lead plan for the HLP-Lead Plant of Hammond Lead Products, Inc. in Hammond Indiana. Additionally, minor changes were made to Indiana's overall lead rule, 326 IAC 15–1, Lead Emission Limitations.

(i) Incorporation by reference.

(A) Title 326—Air Pollution Control Board—Indiana Administrative Code (326 IAC) 15–1, as published in the Indiana Register (IR) on July 1, 1989, at 1850. This rule was effective for State purposes on July 14, 1989.

(79) [Reserved]

(80) On October 15, 1987, the State submitted 325 IAC 8–2–13, Wood Furniture and Cabinet Coating, as a portion of its 1982 ozone plan, which gives provisions and requirements for controlling volatile organic compound (VOC) emissions from sources located in Clark, Floyd, Lake and Porter Counties. On November 16, 1988, the State submitted this rule recodified as 326 IAC 8–2–12, Wood Furniture and Cabinet Coating.

(i) Incorporation by reference.

(A) Title 326 Air Pollution Control Board, Indiana Administrative Code (IAC) 8–2–1, Applicability of rule; and 326 IAC 8–2–12, Wood furniture and cabinet coating, as published in the April 1, 1988, ''Indiana Register'' (IR), at 11 IR 2536 and corrected on March 1, 1989, at 12 IR 1394. Filed with the Secretary of State on March 10, 1988.

(81) On April 11, 1988, the State submitted, as a portion of its 1982 ozone plan, rules to control volatile organic compound (VOC) emissions in Lake and Porter Counties. These rules consist of the provisions and requirements in 326 IAC 14–1, General Provisions; 326 IAC 14–8, Emission Standards for Equipment Leaks; and 326 IAC 14–9, Emission Limitations for Benzene from Furnace Coke Oven By-product Recovery Plants.

(i) Incorporation by reference.

(A) Amendments to title 326, Air Pollution Control Board, Indiana Administrative Code (IAC) 14–1 General Provisions; 326 IAC 14–8 Emission Standards for Equipment Leaks; (Fugitive Emission Sources); and 326 IAC 14–9 Emission Limitations for Benzene from Furnace Coke Oven By-Product Recovery Plants, as published in the June 1, 1988, Indiana Register (IR) at 11 IR 3011. Filed with the Secretary of State on April 13, 1988.

(82) [Reserved]

(83) On January 21, 1981, the State submitted its revised Malfunctions Rule 325 IAC 1.1–5. On November 16, 1988, Indiana submitted its recodified regulations. This rule was renumbered 326 IAC 1–6, Malfunctions.

(i) Incorporation by reference. (A) Title 326 of the Indiana Administrative Code (IAC), Rule 326 IAC 1–6: Malfunctions as published in the April 1, 1988, Indiana Register (IR) at 11 IR 2380. Filed with the Secretary of State on March 10, 1988.

(ii) Additional materials. (A) On July 2, 1982, the State submitted clarifications of its intent for 325 IAC 1.1–5.

(84) On October 27, 1989, and January 19, 1990, Indiana submitted its vehicle inspection and maintenance plan for Clark, Floyd, Lake, and Porter Counties.

(i) *Incorporation by reference.* (A) Title 326, Air Pollution Control Board, of the Indiana Administrative Code (IAC), Rule 13–1, Motor Vehicle Inspection and Maintenance Requirements, Adopted at 13 Indiana Register 500, effective January l, 1990.

(85) On December 2, 1983, Indiana submitted its transportation control plan for Clark and Floyd Counties as one element in its ozone plan for the area. Additional material was submitted on May 14, 1986.

(i) *Incorporation by reference.* (A) Chapter 7, Mobile Source Strategies and Reductions, sections A.1.b and exhibits 7–2 and 7–4, as adopted by the Indiana Air Pollution Control Board at its November 2, 1983, meeting.

(ii) *Additional material.* (A) On May 14, 1986, Indiana submitted an April 23, 1986, Letter from Jim Thorne, Transportation Director, Kentuckiana Regional Planning and Development Agency, discussing the Clark and Floyd Counties portion of the Louisville, Kentucky transportation control plan.

(86) On February 15, 1990, Indiana submitted an amended rule which updates the applicable edition of the Code of Federal Regulations from the 1987 edition to the 1988 edition.

(i) Incorporation by reference. (A) Title 326, Air Pollution Control Board, Indiana Administrative Code (IAC) 1–1–3, References to the Code of Federal Regulations, as published in the February 1, 1990, Indiana Register (IR), Volume 13 at IR 867. Filed with the Secretary of State on December 14, 1989.

(87) On October 23, 1990, and August 19, 1991, the Indiana Department of Environmental Management submitted regulations adopted by the Indiana Air Pollution Control Board as part of title 326 of the Indiana Administrative Code and intended incorporation to the Indiana ozone plan as part of the stationary source control strategy.

(i) Incorporation by reference.

(A) The following volatile organic compound rules adopted by the Indiana Air Pollution Control Board as part of title 326 of the Indiana Administrative Code (326 IAC) and intended to partially satisfy the requirements of the Clean Air Act.

(*1*) Effective October 23, 1988: 326 IAC 8–1–.05 Coating Definition, 326 IAC 8–2–11 Fabric and Vinyl Coating.

(*2*) Effective February 15, 1990: 326 IAC 1–2–48 Non-Photochemically Reactive Hydrocarbon Defined; 326 IAC 8–2–5 Paper Coating Operations.

(*3*) Effective May 18, 1990: 326 IAC 1–2–18.5 Cold Cleaner Degreaser Defined; 326 IAC 1–2–21.5 Conveyorized Degreaser Defined; 326 IAC 1–2–29.5 Freeboard Height Defined; 326 IAC 1–2–29.6 Freeboard Ratio Defined; 326 IAC 1–2–49.5 Open Top Vapor Degreaser Defined; 326 IAC 8–2–9 Miscellaneous Metal Coating Operations; 326 IAC 8–3–1 Organic Solvent Degreasing Operations; 326 IAC 8–5–3 Synthesized Pharmaceutical Manufacturing Operations; 326 IAC 8–5–5 Graphic Arts Operations.

(*4*) Effective June 8, 1990: 326 IAC 8–1–2 Compliance Methods; 326 IAC 1–2–90 Volatile Organic Compound (VOC) Definition; 326 IAC 8–1–4 Testing Procedures.

(*5*) Effective June 5, 1991: 326 IAC 1–2–14 Coating Line Definition; 326 IAC 8–1–1 Applicability of Rule; 326 IAC 8–1–2 Compliance Methods; 326 IAC 8–1–4 Testing Procedures; 326 IAC 8–2–1 Applicability; 326 IAC 8–3–5 Cold Cleaner Degreaser Operation and Control; 326 IAC 8–3–6 Open Top Vapor Degreaser Operation and Control Requirements; 326 IAC 8–3–7 Conveyorized Degreaser Operation and Control; 326 IAC 8–4–8 Leaks from Petroleum Refineries, Monitoring, Reports; 326 IAC 8–5–5 Graphic Arts Operations.

(88) On February 15, 1990, the Indiana Department of Environmental Management submitted a request to revise the Indiana State Implementation Plan by adding a site specific particulate matter revision for Navistar International Transportation Corporation (Navistar) gray iron foundry and engine plant in Indianapolis, Indiana.

(i) Incorporation by reference.

(A) Title 326 Air Pollution Control Board, Indiana Administrative Code (IAC) 6–1–12 as amended, effective January 13, 1990.

(89) On July 22, 1991, as supplemented on April 18, 1994, the State submitted regulations adopted by the Indiana Air Pollution Control Board as part of Title 326 of the Indiana Administrative Code for incorporation into the Indiana

sulfur dioxide State Implementation Plan.

(i) Incorporation by reference.

(A) 326 Indiana Administrative Code 7–4–12.1: Gibson County sulfur dioxide emission limitations; effective December 5, 1990. Published in the *Indiana Register,* Volume 14, Number 3, December 1, 1990.

(90) On March 3, 1989, the Indiana Department of Environmental Management submitted a request to revise the Indiana State Implementation Plan (SIP) by adding an emission trade or bubble for Joseph E. Seagram and Sons which is located in Lawrenceburg, Indiana. This requested SIP revision repeals rule 326 Indiana Administrative Code (IAC) 6–1–8, adds a new Section, 326 IAC 6–1–8.1, and amends 326 IAC 6–1–7 to include a reference for the new Section and a recodification of the applicable rule.

(i) *Incorporation by reference.* (A) Title 326 IAC 6–1–7 as published in the Indiana Register Volume 12, Number 6, March 1, 1989, effective April 9, 1989.

(B) Title 326, IAC 6–1–8.1, repeal of 326 IAC 6–1–8 as published in the Indiana Register, Volume 12, Number 6, March 1, 1989, effective March 1, 1989.

(91) On January 6, 1994, the State of Indiana submitted a requested revision to the Indiana State Implementation Plan (SIP) intended to satisfy the requirements of section 182(a)(3)(B) of the Clean Air Act as amended in 1990. Included were State rules establishing procedures for the annual reporting of emissions of volatile organic material (VOM) and oxides of nitrogen (NOx) as well as other regulated air pollutants by stationary sources in ozone nonattainment areas.

(i) Incorporation by reference.

(A) Title 326 of the Indiana Administrative Code (326 IAC) 2–6 which was adopted by the Indiana Air Pollution Control Board, effective December 13, 1993.

(92) On February 25, 1994, Indiana submitted an employee commute option rule intended to satisfy the requirements of section 182(d)(1)(B) of the Clean Air Act Amendments of 1990.

(i) *Incorporation by reference.* (A) Title 326 of the Indiana Administrative Code, Article 19 MOBILE SOURCE RULES, Rule 1, Employee Commute Options. Filed with the Secretary of State, October 28, 1993, effective November 29, 1993. Published at Indiana Register, Volume 17, Number 3, December 1, 1993.

(93) On February 25, 1994, the Indiana Department of Environmental Management requested a revision to the Indiana State Implementation Plan in the form of Stage II Vapor Recovery Rules as amendments to Title 326 of the Indiana Administrative Code (326 IAC) 8–1–0.5 and 8–4–6.

(i) Incorporation by reference.

(A) 326 IAC 8–1–0.5 Definitions and 8–4–6 Gasoline dispensing facilities. Filed with the Secretary of State October 28, 1993, effective November 29, 1993. Published at Indiana Register, Volume 17, Number 3, December 1, 1993.

(94) On February 25, 1994, Indiana requested a revision to the State Implementation Plan (SIP) in the form of amendments to Title 326: Air Pollution Control Board of the Indiana Administrative Code (326 IAC) 2–1–1 and 2–1–3 which were intended to satisfy the additional new source review requirements of the Clean Air Act Amendments of 1990. The USEPA, at this time, is also approving the incorporation of permitting rules recodified as Article 2. Permit Review Rules of 326 IAC into the SIP to replace APC 19 which was incorporated into the Indiana SIP at 40 CFR 52.770 (c)(24).

(i) Incorporation by reference.

(A) Amendments to Title 326 IAC 2–1–1, 2–1–2, 2–1–3, 2–3–1, 2–3–2, 2–3–3, and 2–3–5. Filed with the Secretary of State November 12, 1993, effective December 13, 1993.

(B) Amendments to Title 326 IAC 2–1–4, 2–1–5, 2–1–6, 2–1–7, 2–1–9, 2–1–10, 2–1–11, 2–1–12, 2–1–13, 2–3–4. Filed with the Secretary of State March 10, 1988, effective April 9, 1988.

(95) On May 22, 1994, the Indiana Department of Environmental Management submitted a request to revise the Indiana State Implementation Plan by adding a lead plan for Marion County which consists of a source specific revision to Title 326 of the Indiana Administrative Code (326 IAC) for Refined Metals.

(i) Incorporation by reference.

(A) Amendments to 326 IAC 15–1–2 Source-specific provisions. Filed with the Secretary of State March 25, 1994.

Effective April 24, 1994. Published at Indiana Register, Volume 17, Number 8, May 1, 1994.

(96) On August 3, 1994 and February 6, 1995, the Indiana Department of Environmental Management submitted a requested SIP revision to the ozone plan for ozone nonattainment areas.

(i) *Incorporation by reference.*

(A) Indiana Administrative Code, Title 326: Air Pollution Control Board, Article 1: General Provisions, Rule 2: Definitions, Section 22.5 ''Department'' definition, Section 28.5 ''Federally enforceable'' definition, and Section 64.1 ''Reasonably available control technology'' or ''RACT'' definition. Added at 18 *Indiana Register* 1223–4, effective January 21, 1995.

(B) Indiana Administrative Code, Title 326: Air Pollution Control Board, Article 8: Volatile Organic Compound Rules, Rule 7: Specific VOC Reduction Requirements for Lake, Porter, Clark, and Floyd Counties. Added at 18 *Indiana Register* 1224–9, effective January 21, 1995.

(97) On October 25, 1994, the Indiana Department of Environmental Management requested a revision to the Indiana State Implementation Plan in the form of revisions to State Operating Permit Rules intended to satisfy Federal requirements for issuing federally enforceable State operating permits (FESOP) and thereby exempt certain small emission sources from review under the State's title V operating permit program. This FESOP rule is also approved for the purpose of providing federally enforceable emissions limits on hazardous air pollutants listed under section 112(b) of the Clean Air Act. This revision took the form of an amendment to Title 326: Air Pollution Control Board of the Indiana Administrative Code (326 IAC) 2–8 Federally Enforceable State Operating Permit Program.

(i) Incorporation by reference. 326 IAC 2–8 Federally Enforceable State Operating Permit Program. Sections 1 through 17. Filed with the Secretary of State May 25, 1994. Effective June 24, 1994. Published at Indiana Register, Volume 17, Number 10, July 1, 1994.

(98) On October 25, 1994, the Indiana Department of Environmental Management requested a revision to the Indiana State Implementation Plan in the form of revisions to State Operating Permit Rules intended to allow State permitting authorities the option of integrating requirements determined during preconstruction permit review with those required under title V. The State's Enhanced New Source Review provisions are codified at Title 326: Air Pollution Control Board (326 IAC) 2–1–3.2 Enhanced New Source Review.

(i) Incorporation by reference. 326 IAC 2–1–3.2 Enhanced new source review. Filed with the Secretary of State May 25, 1994. Effective June 24, 1994. Published at Indiana Register, Volume 17, Number 10, July 1, 1994.

(99) On June 16, 1993, December 9, 1993, September 8, 1994, and November 17, 1994, Indiana submitted a part D particulate matter (PM) nonattainment area plan for the Lake County moderate nonattainment area.

(i) Incorporation by reference.

(A) Indiana Administrative Code Title 326: Air Pollution Control Board, Article 1: General Provisions, Rule 2: Definitions, Section 32.1: ''Gooseneck cap'' definition, Section 34.1: ''Jumper pipe'' definition, Section 62.1: ''Quench car'' definition, Section 63.1: ''Quench reservoir'' definition, and Section 63.2: ''Quench tower'' definition. Added at 16 *Indiana Register* 2363, effective June 11, 1993.

(B) Indiana Administrative Code Title 326: Air Pollution Control Board, Article 5: Opacity Regulations, Rule 1: Opacity Limitations, Section 1: Applicability of rule, Section 2: Visible emissions limitations, Section 3: Temporary exemptions, Section 4: Compliance determination, Section 5: Violations, and Section 7: State implementation plan revisions. Amended at 16 *Indiana Register* 2363, effective June 11, 1993.

(C) Indiana Administrative Code Title 326: Air Pollution Control Board, Article 6: Particulate Rules, Rule 1: Nonattainment Area Limitations, Opacity Limitations, Section 10.1: Lake County PM10 emissions requirements (subsections a through k), Section 10.2: Lake County PM10 coke battery emissions requirements, and Section 11.1: Lake County fugitive particulate matter control requirements.

Added at 16 *Indiana Register* 2363, effective June 11, 1993.

(D) Indiana Administrative Code Title 326: Air Pollution Control Board, Article 11: Emissions Limitations for Specific Types of Operations, Rule 3: Coke Oven Batteries, Section 2: Emissions limitations (subsections a through f, and i), and Section 4: Compliance determination. Amended at 16 *Indiana Register* 2363, effective June 11, 1993.

(100) On August 25, 1995, Indiana submitted a regulation which bans residential open burning in Clark, Floyd, Lake, and Porter Counties in Indiana. The regulation allows residential open burning, with certain restrictions, in other parts of the State, and describes other types of open burning which are allowed in Indiana.

(i) Incorporation by reference.

(A) Indiana Administrative Code Title 326: Air Pollution Control Board, Article 4: Burning Regulations, Rule 1: Open Burning, Section 3: Exemptions. Added at 18 In. Reg. 2408 Effective June 23, 1995.

(101) On August 25, 1995, Indiana submitted a regulation which reduced the maximum allowable volatility for gasoline sold in Clark and Floyd Counties to 7.8 psi during the summer control period. The summer control period is June 1, to September 15, for retail outlets and wholesale customers, and May 1, to September 15, for all others.

(i) Incorporation by reference. 326 Indiana Administrative Code 13–3 Control of Gasoline Reid Vapor Pressure. Sections 1 through 7. Finally adopted by the Indiana Air Pollution Control Board January 11, 1995. Signed by the Secretary of State July 6, 1995. Effective August 5, 1995. Published at Indiana Register, Volume 18, Number 11, August 1, 1995.

(102) On June 6, 1995, and on September 28, 1995 the Indiana Department of Environmental Management submitted State Implementation Plan (SIP) revisions establishing an enhanced inspection and maintenance (I/M) program in accordance with the requirements of the Clean Air Act as amended in 1990. The new enhanced I/M program replaces the basic I/M programs in operation in Lake, Porter, Clark, and Floyd Counties. The Air Pollution Control Board adopted new rule 326 IAC 13–1.1 and repealed existing 326 IAC 13–1, thereby putting in place a revised I/M program.

(i) Incorporation by reference.

(A) 326 Indiana Administrative Code 13–1.1 adopted April 5, 1995, effective October 1, 1995.

(ii) Other material.

(A) June 6, 1995 letter and enclosures from the Indiana Department of Environmental Management (IDEM) Commissioner to the Regional Administrator of the United States Environmental Protection Agency (USEPA) submitting Indiana's revision to the ozone State Implementation Plan (SIP).

(B) September 28, 1995 letter and enclosures from the IDEM Assistant Commissioner to the Regional Administrator of USEPA submitting supplemental vehicle inspection and maintenance SIP revision information and documentation.

(103) On August 25, 1995, the State submitted regulations adopted by the Indiana Air Pollution Control Board as part of title 326 of the Indiana Administrative Code for incorporation into the Indiana sulfur dioxide State Implementation Plan.

(i) Incorporation by reference.

(A) 326 Indiana Administrative Code 7–4–13(3); Dearborn County sulfur dioxide emission limitations; effective May 18, 1995. Published in the *Indiana Register,* Volume 18, Number 9, June 1, 1995.

(104) On December 20, 1995, and February 14, 1996, Indiana submitted a Clean-Fuel Fleet Program for Lake and Porter Counties as a revision to the State Implementation Plan.

(i) Incorporation by reference. 326 Indiana Administrative Code 19–3 Clean Fuel Fleet Vehicles, Sections 1 through 7. Adopted by the Indiana Air Pollution Control Board October 4, 1995. Signed by the Secretary of State December 19, 1995. Effective January 18, 1996. Published at Indiana Register, Volume 19, Number 5, February 1, 1996.

(105) On October 25, 1994, the Indiana Department of Environmental Management submitted a requested revision to the Indiana State Implementation Plan in the form of Source Specific Operating Agreement (SSOA) regulations. The SSOA regulations are intended to

limit the potential to emit for a source to below the threshold level of Title V of the Clean Air Act. This revision took the form of an amendment to title 326: Air Pollution Control Board of the Indiana Administrative Code (326 IAC) 2–9–1, 2–9–2(a), 2–9–2(b), and 2–9–2(e) Source Specific Operating Agreement Program.

(i) Incorporation by reference. 326 Indiana Administrative Code 2–9. Sections 1, 2(a), 2(b), and 2(e). Adopted by the Indiana Air Pollution Control Board March 10, 1994. Signed by the Secretary of State May 25, 1994. Effective June 24, 1994. Published at Indiana Register, Volume 17, Number 10, July 1, 1994.

(106) On September 19, 1995, and November 8, 1995, Indiana submitted automobile and mobile equipment refinishing rules for Clark, Floyd, Lake, and Porter Counties as a revision to the State Implementation Plan. This rule requires suppliers and refinishers to meet volatile organic compound content limits or equivalent control measures for coatings used in automobile and mobile equipment refinishing operations in the four counties, as well as establishing certain coating applicator and equipment cleaning requirements.

(i) Incorporation by reference. 326 Indiana Administrative Code 8–10: Automobile refinishing, Section 1: Applicability, Section 2: Definitions, Section 3: Requirements, Section 4: Means to limit volatile organic compound emissions, Section 5: Work practice standards, Section 6: Compliance procedures, Section 7: Test procedures, Section 8: Control system operation, maintenance, and monitoring, and Section 9: Record keeping and reporting. Adopted by the Indiana Air Pollution Control Board June 7, 1995. Filed with the Secretary of State October 3, 1995. Published at Indiana Register, Volume 19, Number 2, November 1, 1995. Effective November 2, 1995.

(107) On August 8, 1995, Indiana submitted a site specific SIP revision request for Richmond Power and Light in Wayne County Indiana. The submitted revisions provide for revised particulate matter and opacity limitations on the number 1 and number 2 coal fired boilers at Richmond Power and Light's Whitewater Generating Station. The revisions also allow for time weighted averaging of stack test results at Richmond Power and Light to account for soot blowing. Indiana is making revisions to 326 IAC 3–2–1, which currently allows Indiana to authorize alternative emission test methods for Richmond Power and Light. Until the rule is revised to remove this authority, and approved by the United States Environmental Protection Agency, no alternate emission test method, changes in test procedures or alternate operating load levels during testing is to be granted to Richmond Power and Light.

(i) Incorporation by reference. Indiana Administrative Code Title 326: Air Pollution Control Board, Article 3: Monitoring Requirements, Rule 2.1: Source Sampling Procedures, Section 5: Specific Testing Procedures; Particulate Matter; Sulfur Dioxide; Nitrogen Oxides; Volatile Organic Compounds; Article 5: Opacity Regulations, Rule 1: Opacity Limitations, Section 2: Visible Emission Limitations; and Article 6: Particulate Rules, Rule 1: Nonattainment Area Limitations, Section 14: Wayne County. Added at 18 In. Reg. 2725. Effective July 15, 1995.

(ii) Additional Information. (A) August 8, 1995 letter from the Indiana Department of Environmental Management to USEPA Region 5 regarding submittal of a state implementation plan revision for Richmond Power and Light.

(108) On August 29, 1995, Indiana submitted a site specific SIP revision request for Allison Engine Company in Marion County, Indiana. The revision provides limits of 0 tons per year for boilers 2 and 11, which have shut down. The hourly mass limits remain unchanged at 0.337 pounds per million British Thermal Units (lbs/MMBTU) for boilers 1–4 of plant 5, 0.15 lbs/MMBTU for boilers 3–6 of plant 8, and 0.15 lbs/MMBTU for boilers 7–10 of plant 8. The rule provides for a combined limit of 130.0 tons per year for the boilers mentioned above, as well as new limits on the types and amounts of fuel which may be burned at the boilers, and a recordkeeping requirement to document compliance.

(i) Incorporation by reference. Indiana Administrative Code Title 326: Air Pollution Control Board, Article 6: Particulate Rules, Rule 1: Nonattainment Area Limitations, Section 12:

Marion County. Added at 19 In. Reg. 186. Effective November 3, 1995.

[37 FR 10863, May 31, 1972]

EDITORIAL NOTE: For FEDERAL REGISTER citations affecting §52.770, see the List of CFR Sections Affected in the Finding Aids section of this volume.

EFFECTIVE DATE NOTE: 1. At 61 FR 29963, June 13, 1996, §52.770 was amended by adding paragraph (c)(108), effective Aug. 12, 1996.

2. At 61 FR 29970, June 13, 1996, §52.770 was amended by adding paragraph (c)(106), effective Aug. 12, 1996.

§52.771 Classification of regions.

(a) The Indiana plan was evaluated on the basis of the following classifications:

Air quality control region	Pollutant				
	Particulate matter	Sulfur oxides	Nitrogen dioxide	Carbon monoxide	Photochemical oxidants (hydrocarbons)
East Central Indiana Intrastate	II	II	III	III	III
Evansville (Indiana)-Owensboro-Henderson (Kentucky) Interstate	I	II	III	III	III
Louisville Interstate	I	I	III	III	I
Metropolitan Chicago Interstate (Indiana-Illinois)	I	I	I	I	I
Metropolitan Cincinnati Interstate	I	II	III	III	I
Metropolitan Indianapolis Intrastate	I	I	I	I	I
Northeast Indiana Intrastate	II	III	III	III	III
South Bend-Elkhart (Indiana)-Benton Harbor (Michigan) Interstate	I	IA	III	III	III
Southern Indiana Intrastate	IA	IA	III	III	III
Wabash Valley Intrastate	I	I	III	III	III

(b) The requirements of §51.150 of this chapter are not met by the classification of counties in APC–22 for the purposes of attainment and maintenance of the total suspended particulate ambient air quality standards.

(c) The requirements of §51.150 of this chapter are not met by the classification of counties in APC–22 for the purposes of attainment and maintenance of the photochemical oxidant (hydrocarbon) ambient air quality standards.

(d) The requirements of §51.150 of this chapter are not met by the classification of Jefferson, LaPorte, Porter, Vigo and Warrick Counties in Indiana in Regulation APC–22 for the purposes of attainment and maintenance of the sulfur dioxide ambient air quality standards.

[37 FR 10863, May 31, 1972, as amended at 39 FR 16346, May 8, 1974; 40 FR 50033, Oct. 28, 1975; 41 FR 35677, Aug. 24, 1976; 42 FR 34519, July 6, 1977; 51 FR 40675, Nov. 7, 1986]

§52.772 [Reserved]

§52.773 Approval status.

(a) With the exceptions set forth in this subpart, the Administrator approves Indiana's plan for attainment and maintenance of the National Ambient Air Quality Standards under section 110 of the Clean Air Act.

(b) [Reserved]

(c) The Administrator finds that Indiana's new source review strategy satisfies all requirements of Part D, Title 1 of the Clean Air Act as amended in 1977.

(d)—(e) [Reserved]

(f) The Administrator finds ozone strategies for Clark, Elkhart, Floyd, Lake, Marion, Porter, and St. Joseph Counties satisfy all requirements of Part D, Title I of the Clean Air Act that are required to be submitted by January 1, 1981, except as noted below.

(g) The administrator finds that the total suspended particulate strategies for Clark, Dearborn, Dubois, St. Joseph, Vanderburgh, and Vigo Counties satisfy all the requirements of Part D, Title I of the Clean Air Act except as noted below.

(h) The Administrator finds that the SO_2 strategies for Lake, LaPorte, Marion, Vigo, and Wayne Counties satisfy all requirements of Part D, Title 1 of the Clean Air Act, as amended in 1977. See §52.770 (c)(67) and (c)(72).

(i) The Administrator finds that Indiana's ozone plan for Lake and Porter

Counties, which was required to be submitted by July 1, 1992, does not satisfy all the requirements of part D, title 1 of the Clean Air Act and, thus, is disapproved. See §§52.770(c)(69)and 52.770(d). The disapproval does not affect USEPA's approval (or conditional approval) of individual parts of Indiana's ozone plan and they remain approved.

(j) The Administrator finds that the following portions of Indiana's ozone and CO plans satisfy the related requirements of part D, title 1 of the Clean Air Act, as amended in 1977:

(1) The transportation control plans for Lake, Porter, Clark and Floyd Counties, submitted on May 14, 1986, June 10, 1986, and April 6, 1987.

(2) The vehicle inspection and maintenance plan for Clark, Floyd, Lake, and Porter Counties, submitted October 27, 1989, and January l9, 1990.

(3) The demonstration of attainment, submitted December 2, 1983, and the carbon monoxide plan as a whole for the designated nonattainment area in Lake County.

[37 FR 10864, May 31, 1972, as amended at 46 FR 38, Jan. 2, 1981; 47 FR 6275, Feb. 11, 1982; 47 FR 6623, Feb. 16, 1982; 47 FR 10825, Mar. 12, 1982; 47 FR 20586, May 13, 1982; 47 FR 30980, July 16, 1982; 51 FR 4915, Feb. 10, 1986; 53 FR 33811, Sept. 1, 1988; 53 FR 46613, Nov. 18, 1988; 54 FR 2118, Jan. 19, 1989; 55 FR 31052, July 31, 1990; 59 FR 51114, Oct. 7, 1994]

§ 52.774 [Reserved]

§ 52.775 Legal authority.

(a) The requirements of §51.232(b) of this chapter are not met since the following deficiencies exist in the local agency legal authority:

(1) East Chicago: (i) Authority to require recordkeeping is inadequate (§51.230(e) of this chapter).

(ii) Authority to require installation of monitoring devices is inadequate (§51.230(f) of this chapter).

(2) Evansville: (i) Authority to prevent construction, modification, or operation of any stationary source at any location where emissions from such source will prevent the attainment or maintenance of a national standard is inadequate (§51.230(d) of this chapter).

(ii) Authority to require recordkeeping is inadequate (§51.230(e) of this chapter).

(iii) Authority to require installation of monitoring devices is inadequate (§51.230(f) of this chapter).

(3) Gary: (i) Authority to require recordkeeping is inadequate (§51.230(e) of this chapter).

(ii) Authority to require installation of monitoring devices is inadequate (§51.230(f) of this chapter).

(4) Hammond: (i) Authority to require recordkeeping is inadequate (§51.230(e) of this chapter).

(ii) Authority to require installation of monitoring devices is inadequate (§51.230(f) of this chapter).

(5) Indianapolis: (i) Authority to require recordkeeping is inadequate (§51.230(e) of this chapter).

(ii) Authority to require installation of monitoring devices is inadequate (§51.230(f) of this chapter).

(6) Michigan City: (i) Authority to require recordkeeping is inadequate (§51.230(e) of this chapter).

(ii) Authority to require installation of monitoring devices is inadequate (§51.230(f) of this chapter).

(7) Wayne County: (i) Authority to require recordkeeping and to make inspections and conduct tests of air pollution sources is inadequate (§51.230(e) of this chapter).

(ii) Authority to require installation of monitoring devices is inadequate (§51.230(f) of this chapter).

(iii) Authority to prevent construction, modification, or operation of any stationary source at any location where emissions from such source will prevent the attainment or maintenance of a national standard is inadequate (§51.230(d) of this chapter).

(8) Lake County: (i) Authority to require installation of monitoring devices is inadequate (§51.230(f) of this chapter).

(ii) Authority to prevent construction, modification, or operation of any stationary source at any location where emissions from such source will prevent the attainment or maintenance of a national standard is inadequate (§51.230(d) of this chapter).

(9) St. Joseph County: (i) Authority to prevent construction, modification, or operation of any stationary source at any location where emissions from such source will prevent the attainment or maintenance of a national

standard is inadequate (§51.230(d) of this chapter).

(ii) Authority to require recordkeeping is inadequate (§51.230(e) of this chapter).

(iii) Authority to require installation of monitoring devices is inadequate (§51.230(f) of this chapter).

(10) Vigo County: (i) Authority to require recordkeeping is inadequate (§51.230(e) of this chapter).

(ii) Authority to require installation of monitoring devices is inadequate (§51.230(f) of this chapter).

(iii) Authority to prevent construction, modification, or operation of any stationary source at any location where emissions from such source will prevent the attainment or maintenance of a national standard is inadequate (§51.230(d) of this chapter).

(11) Anderson County: (i) Authority to require installation of monitoring devices is inadequate (§51.230(f) of this chapter).

[37 FR 10863, May 31, 1972, as amended at 40 FR 55329, Nov. 28, 1975; 51 FR 40676, Nov. 7, 1986; 52 FR 24367, June 30, 1987]

§52.776 Control strategy: Particulate matter.

(a) The requirements of subpart G of this chapter are not met since the plan does not provide for attainment and maintenance of the secondary standards for particulate matter in the Metropolitan Indianapolis Intrastate Region.

(b) APC 4–R of Indiana's ''Air Pollution Control Regulations'' (emission limitation for particulate matter from fuel combustion sources), which is part of the control strategy for the secondary standards for particulate matter, is disapproved for the Metropolitan Indianapolis Intrastate Region since it does not provide the degree of control needed to attain and maintain the secondary standards for particulate matter. APC 4–R is approved for attainment and maintenance of the primary standards for particulate matter in the Metropolitan Indianapolis Intrastate Region.

(c) APC–3 of Indiana's Air Pollution Control Regulations (visible emission limitation) is disapproved insofar as the phrase ''for more than a cumulative total of 15 minutes in a 24-hour period'' will interfere with attainment and maintenance of particulate standards.

(d) [Reserved]

(e) Part D—Conditional Approval—The complete Indiana plan for Clark, Dearborn, Dubois, Marion (except for coke batteries), St. Joseph, Vanderburgh, and Vigo Counties is approved provided that the following condition is satisfied:

(1) The Part D Plan must contain Industrial Fugitive Dust Regulations. The State must submit these by July 31, 1982.

(f) 325 IAC 11–3–2(f), (as amended on August 27, 1981) is not approved as it applies to Lake and Marion Counties, insofar as it does not meet the requirements of section 172(b)(3) of the Clean Air Act.

(g) 325 IAC 11–3–2(g) and 11–3–2(h) (as amended on August 27, 1981) are disapproved insofar as they do not meet the requirements of section 110(a)(2)(D) of the Clean Air Act.

(h) Equivalent Visible Emission Limits (EVEL). (1) A 20% 2-hour opacity limit for the underfire stack at Bethlehem Steel Corporation's Coke Battery No. 2 in Porter County is approved as an EVEL to determine compliance with the 325 IAC 6–2 SIP limit of 0.33 lbs/MMBTU. This EVEL is approved for as long as the SIP mass emission limit for this source remains the same as determined by 325 IAC 6–2 (October 6, 1980, submittal). See §52.770(c)(6), (35), and (42).

(2) Revised opacity limits for the boilers at Olin Corporation in Warren County are approved at §52.770(c)(51) as an EVEL to determine compliance with the 325 IAC 6–2 SIP limit of 0.80 lbs/MMBTU. This EVEL is approved for as long as the SIP mass emission limit for this source remains the same as determined by 325 IAC 6–2 (October 6, 1980 submittal). See §52.770(c)(6) and (35).

(i) 325 IAC 6–2.1 is approved with the State's March 27, 1985, commitment that any ''bubble'' approved by the State under 325 IAC 6–2.1–2(b) and 3(b) will also be subject to the State's general ''bubble'' regulation, 325 IAC 2–4. The State additionally committed that until such time as 325 IAC 2–4 is approved as a part of the SIP, all such limits approved under the bubbling

provisions of 325 IAC 6–2.1–2(b) and 3(b) will be submitted as site specific revisions to the SIP. Unless and until these emission point specific limits are approved as a portion of the SIP, the SIP limit for each individual emission point will remain the general limit calculated by means of the formulae in 325 IAC 6–2.1–2(a) and 3(a), even though a revised emission point specific limit has been adopted by Indiana under 325 IAC 6–2.1–2(b) and 3(b). See 52.770(c)(50).

(j) The revised Lake County Total Suspended Particulates (TSP) Plan, comprised of submittals dated October 11, 1983, October 24, 1983, and April 16, 1984, is disapproved because the State did not demonstrate that it assures attainment and maintenance of the primary TSP National Ambient Air Quality Standards in Lake County, Indiana. See 40 CFR 51.10(b).

(k) On January 18, 1984, Indiana submitted a visible emission limit on coke oven battery doors and a limit on total dissolved solids content of coke quench makeup water for Battery Number One at Citizens Gas and Coke Utility in Marion County. These limits are disapproved because they are impermissible relaxations of requirements for each new major stationary sources, as provided at § 52.21(j)(2) and section 173 of the Clean Air Act. See § 52.770(c)(60).

(l) The revised Porter County TSP plan, as submitted by Indiana on October 15, 1984, is disapproved, because the State did not demonstrate that it assures the attainment and maintenance of the primary TSP NAAQS in Porter County, Indiana. See § 52.770(c)(61).

(m) The Indiana Part D TSP plan is disapproved insofar as it does not contain RACT level opacity limits for certain process fugitive sources in TSP nonattainment areas and, therefore, does not meet the requirements of section 172 of the Clean Air Act.

(n) Approval—On June 23, 1988, and July 17, 1989, the State of Indiana submitted committal SIPs for particulate matter with an aerodynamic diameter equal to or less than 10 micrometers (PM_{10}) for the Group II areas within Marion and Vigo Counties and all of Porter County, respectively. The committal SIPs meet all the requirements identified in the July 1, 1987, promulgation of the SIP requirements for PM_{10} at 52 FR 24681.

(o) Approval—On November 16, 1988 and September 10, 1992, Indiana submitted the following list of control measures for particulate matter (PM) already in its State Implementation Plan as a Group III Plan: 326 IAC 1–3–2, its air monitoring network, its list of possible additional sites for PM, its Prevention of Significant Deterioration rules and the following control measures which are part of 325 IAC: 2, Permit Review Rules; 5–1, Opacity Limitations; 6–1–1 to 6–1–6, Nonattainment Area Limitations; 6–1–8, Dearborn County; 6–1–9, Dubois County; 6–1–12, Marion County; 6–1–13, Vigo County; 6–1–14, Wayne County; 6–1–15, Howard County; 6–1–16, Vandenburgh County; 6–1–17, Clark County; 6–1–18, St. Joseph County; 6–2, Particulate Emissions Limitations for Sources of Indirect Heating; 6–3, Process Operations; 6–4, Fugitive Dust Emissions; 11–1, Existing Foundries; 11–4, Fiberglass Insulation Manufacturing; 11–5, Fluoride Emission Limitations for Existing Primary Aluminum Plants.

(p) Approval–On January 13, 1993, the State of Indiana submitted a particulate matter State Implementation Plan revision for the Vermillion County nonattainment area. Additional information was submitted on February 22, 1993, and April 8, 1993. These materials demonstrate that the plan will provide for attainment of the National ambient air quality standards for particulate matter by December 31, 1994, in accordance with section 189(a)(1)(B) of the Clean Air Act.

[37 FR 15084, July 27, 1972]

EDITORIAL NOTE: For FEDERAL REGISTER citations affecting § 52.776, see the List of CFR Sections Affected in the Finding Aids section of this volume.

§ 52.777 Control strategy: Photochemical oxidants (hydrocarbons).

(a) The requirements of subpart G of this chapter are not met because the plan does not provide for attainment and maintenance of the national standards for photochemical oxidants (hydrocarbons) in the Metropolitan Indianapolis Intrastate Region by May 31, 1975.

(b) The requirements of subpart G are not met by Revised APC–15 (November 8, 1974 submission) because it does not provide for attainment and maintenance of the photochemical oxidant (hydrocarbon) standards throughout Indiana.

(c) Part D—Conditional approval—The 1979 Indiana plan for Clark, Floyd, Elkhart, Lake, Marion, Porter, and St. Joseph Counties is approved provided the following conditions are satisfied:

(1) The plan for stationary source volatile organic compound control must contain the following:

(i)—(iv) [Reserved]

(v) For regulation 325 IAC 8–5, Section 6, Perchloroethylene Dry Cleaning, the State must conduct a study to demonstrate that the 1,500 gallons exemption meets RACT requirements and submit the results to EPA within 6 months of the effective date of final rulemaking on 325 IAC 8 for VOC from Group II CTG source categories. If the demonstrated emissions resulting from the State's exemption are not essentially equivalent to those resulting from the RACT requirements, then the State must submit to EPA by July 1, 1983, a rule which requires control of emissions from dry cleaning sources using less than 1,500 gallons of perchloroethylene per year.

(2) The stationary source volatile organic control measures submitted by the State on October 23, 1990, and August 19, 1991, are approved as described in 40 CFR 52.770(c)(87) with the exception of 326 IAC 8–5–4 Pneumatic Rubber Tire Manufacturing, on which USEPA has taken no action. It should be noted that although the State's control measures provide that equivalent test methods, alternative emission controls, and revisions in rule applicability must be submitted to the USEPA as proposed revisions to the State Implementation Plan (SIP), such proposed SIP revisions are not part of the SIP unless and until they are approved as such by the USEPA.

(d) Part D—Disapproval. The 1982 Indiana plan for Lake and Porter County is disapproved because it does not assure the attainment and maintenance of the NAAQS there. See §§ 52.770(c)(69) and 52.773(i). The disapproval does not affect USEPA's approval (or conditional approval) of individual parts of Indiana's ozone plan and they remain approved.

(e) Approval—The Administrator approves the incorporation of the photochemical assessment ambient monitoring system submitted by Indiana on November 15, 1993, into the Indiana State Implementation Plan. This submittal satisfies 40 CFR 58.20(f), which requires the State to provide for the establishment and maintenance of photochemical assessment monitoring stations (PAMS) by November 12, 1993.

(f) *Approval.* The Indiana Department of Environmental Management submitted two ozone redesignation requests and maintenance plans requesting the ozone nonattainment areas to be redesignated to attainment for ozone: South Bend/Elkhart (St. Joseph and Elkhart Counties), submitted on September 22, 1993; Indianapolis (Marion County), submitted on November 12, 1993. The redesignation requests and maintenance plans meet the redesignation requirements in section 107(d)(3)(d) of the Act as amended in 1990. The redesignations meet the Federal requirements of section 182(a)(1) of the Clean Air Act as a revision to the Indiana Ozone State Implementation Plan for the above mentioned counties.

(g) The base year ozone precursor emission inventory requirement of section 182(a)(1) of the Clean Air Act, as amended in 1990, has been satisfied for the following areas: Vanderburgh County in the Evansville Metropolitan Area; Marion County in the Indianapolis Metropolitan Area; and St. Joseph and Elkhart Counties in the South Bend Metropolitan Area.

(h) On November 17, 1993, Indiana submitted two of three elements required by section 182(d)(1)(A) of the Clean Air Amendments of 1990 to be incorporated as part of the vehicle miles traveled (VMT) State Implementation Plan intended to offset any growth in emissions from a growth in vehicle miles traveled. These elements are the offsetting of growth in emissions attributable to growth in VMT which was due November 15, 1992, and, any transportation control measures (TCMs) required as part of Indiana's 15 percent reasonable further progress (RFP) plan

which was due November 15, 1993. Indiana satisfied the first requirement by projecting emissions from mobile sources and demonstrating that no increase in emissions would take place. Indiana satisfied the second requirement by determining that no TCMs were required as part of Indiana's 15 percent RFP plan.

(i) Approval—EPA is approving the section 182(f) oxides of nitrogen (NO_X) reasonably available control technology (RACT), new source review (NSR), vehicle inspection/maintenance (I/M), and general conformity exemptions for the Indiana portion of the Chicago-Gary-Lake County severe ozone nonattainment area as requested by the States of Illinois, Indiana, Michigan, and Wisconsin in a July 13, 1994 submittal. This approval does not cover the exemption of NO_X transportation conformity requirements of section 176(c) for this area. Approval of these exemptions is contingent on the results of the final ozone attainment demonstration expected to be submitted in mid-1997. The approval will be modified if the final attainment demonstration demonstrates that NO_X emission controls are needed in the nonattainment area to attain the ozone standard in the Lake Michigan Ozone Study modeling domain.

(j) The base year ozone precursor emission inventory requirement of section 182(a)(1) of the Clean Air Act, as amended in 1990, has been satisfied for Lake and Porter Counties, Indiana.

[38 FR 16565, June 22, 1973, as amended at 41 FR 35677, Aug. 24, 1976; 48 FR 2127, Jan. 18, 1983; 51 FR 4916, Feb. 10, 1986; 51 FR 40676, Nov. 7, 1986; 52 FR 33591, Sept. 4, 1987; 53 FR 46613, Nov. 18, 1988; 57 FR 8086, Mar. 6, 1992; 59 FR 12170, Mar. 16, 1994; 59 FR 31548, June 20, 1994; 59 FR 51114, Oct. 7, 1994; 59 FR 54395, Oct. 31, 1994; 60 FR 377, Jan. 4, 1995; 60 FR 38722, July 28, 1995; 61 FR 2437, Jan. 26, 1996]

§ 52.778 Compliance schedules.

(a) The requirements of § 51.262(a) of this chapter are not met since the compliance schedules for sources of nitrogen oxides extend over a period of more than 18 months and periodic increments of progress are not included.

(b)—(c) [Reserved]

(d) The compliance schedule for the source identified below is disapproved as not meeting the requirements of subpart N of this chapter. All regulations cited are air pollution control regulations of the State, unless otherwise noted.

Source	Location	Regulation involved	Date schedule adopted
LAKE COUNTY			
Commonwealth Edison Co. of Indiana, Inc. (State Line Station).	Hammond	APC 13	Jan. 18, 1973.

[38 FR 12698 May 14, 1973, as amended at 39 FR 28158, Aug. 5, 1974; 51 FR 40675, 40676, 40677, Nov. 7, 1986; 54 FR 25258, June 14, 1989]

§ 52.779 [Reserved]

§ 52.780 Review of new sources and modifications.

(a) The requirements of § 51.160(a) of this chapter are not met in that the plan does not contain procedures to enable the State to determine whether construction or modification of coal burning equipment having a heat input of between 350,000 Btu per hour and 1,500,000 Btu per hour will result in violations of applicable portions of the control strategy and section 4(a)(2)(iii) of APC–19 is disapproved to the extent that it exempts coal burning equipment having a heat input of between 350,000 Btu per hour and 1,500,000 Btu per hour from pre-construction/modification review.

(b)–(c) [Reserved]

(d) Limited regulation for the review of new sources and modifications. (1) This requirement is applicable to any coal burning equipment other than smokehouse generators, having a heat input of between 350,000 Btu per hour (88.2 Mg–cal/h) and 1,500,000 Btu per hour (378.0 MG cal/h), the construction of which was commenced after May 14, 1973.

(2) No owner or operator shall commence construction or modification of any coal burning equipment subject to this regulation without first obtaining approval from the Administrator of the location and design of such source.

(i) Application for approval to construct or modify shall be made on forms furnished by the Administrator,

(ii) A separate application is required for each source.

(iii) Each application shall be signed by the applicant.

(iv) Each application shall be accompanied by site information, plans, descriptions, specifications, and drawings showing the design of the source, the nature and amount of emissions, and the manner in which it will be operated and controlled.

(v) Any additional information, plans, specifications, evidence, or documentation that the Administrator may require shall be furnished upon request.

(3) No approval to construct or modify will be granted unless the applicant shows to the satisfaction of the Administrator that:

(i) The source will operate without causing a violation of any local, State, or Federal regulation which is part of the applicable plan; and

(ii) The source will not prevent or interfere with attainment or maintenance of any national standard.

(4) (i) Within twenty (20) days after receipt of an application to construct, or any addition to such application, the Administrator shall advise the owner or operator of any deficiency in the information submitted in support of the application. In the event of such a deficiency, the date of receipt of the application for the purpose of paragraph (d)(4)(ii) of this section, shall be the date on which all required information is received by the Administrator.

(ii) Within thirty (30) days after receipt of a complete application, the Administrator shall:

(*a*) Make a preliminary determination whether the source should be approved, approved with conditions, or disapproved.

(*b*) Make available in at least one location in each region in which the proposed source would be constructed, a copy of all materials submitted by the owner or operator, a copy of the Administrator's preliminary determination and a copy or summary of other materials, if any, considered by the Administrator in making his preliminary determination; and

(*c*) Notify the public, by prominent advertisement in a newspaper of general circulation in each region in which the proposed source would be constructed, of the opportunity for written public comment on the information submitted by the owner or operator and the Administrator's preliminary determination on the approvability of the source.

(iii) A copy of the notice required pursuant to this paragraph shall be sent to the applicant and to state and local air pollution control agencies, having cognizance over the location where the source will be situated.

(iv) Public comments submitted in writing within thirty (30) days after the date such information is made available shall be considered by the Administrator in making his final decision on the application. No later than ten (10) days after the close of the public comment period, the applicant may submit a written response to any comment submitted by the public. The Administrator shall consider the applicant's response in making his final decision. All comments shall be made available for public inspection in at least one location in the region in which the source would be located.

(v) The Administrator shall take final action on an application within thirty (30) days after the close of the public comment period. The Administrator shall notify the applicant in writing of his approval, conditional approval, or denial of the application, and shall set forth his reasons for conditional approval or denial. Such notification shall be made available for public inspection in at least one location in the region in which the source would be located.

(vi) The Administrator may extend each of the time periods specified in paragraph (d)(4) (ii), (iv) or (v) of this section by no more than 30 days, or such other period as agreed to by the applicant and the Administrator.

(5) The Administrator may impose any reasonable conditions upon an approval, including conditions requiring the source to be provided with:

(i) Sampling ports of a size, number, and location as the Administrator may require,

(ii) Safe access to each port,

(iii) Instrumentation to monitor and record emission data, and

(iv) Any other sampling and testing facilities.

(6) The Administrator may cancel an approval if the construction is not begun within 2 years from the date of issuance, or if during the construction, work is suspended for 1 year.

(7) Any owner or operator subject to the provisions of this regulation shall furnish the Administrator written notification as follows:

(i) A notification of the anticipated date of initial startup of a source not more than 60 days or less than 30 days prior to such date.

(ii) A notification of the actual date of initial startup of a source within 15 days after such date.

(8) Within 60 days after achieving the maximum production rate at which the source will be operated but not later than 180 days after initial startup of such source, the owner or operator of such source shall conduct a performance test(s) in accordance with methods and under operating conditions approved by the Administrator and furnish the Administrator a written report of the results of such performance test.

(i) Such test shall be at the expense of the owner or operator.

(ii) The Administrator may monitor such test and may also conduct performance tests.

(iii) The owner or operator of a source shall provide the Administrator 15 days prior notice of the performance test to afford the Administrator the opportunity to have an observer present.

(iv) The Administrator may waive the requirement of performance tests if the owner or operator of a source has demonstrated by other means to the Administrator's satisfaction that the source is being operated in compliance with all local, State, and Federal regulations which are part of the applicable plan.

(9) [Reserved]

(10) Approval to construct or modify shall not relieve any owner or operator of the responsibility to comply with all local, State, and Federal regulations which are part of the applicable plan.

(11) Any owner or operator who constructs, modifies, or operates a stationary source not in accordance with the application, as approved and conditioned by the Administrator, or any owner or operator of a stationary source subject to this paragraph who commences construction or modification without applying for and receiving approval hereunder, shall be subject to enforcement action under section 113 of the Act.

(e) The requirements of subpart I of this chapter are not met because the State failed to submit a plan for review of new or modified indirect sources.

(f) Regulation for review of new or modified indirect sources. The provisions of § 52.22(b) are hereby incorporated by reference and made a part of the applicable implementation of the plan for the State of Indiana.

(g) Delegation of authority. (1) The Administrator shall have the authority to delegate responsibility for implementing the procedures for conducting source review pursuant to this section in accordance with paragraphs (f) (2), (3), and (4) of this section.

(2) Where the Administrator delegates the responsibility for implementing the procedures for conducting source review pursuant to this section to any Agency, other than a Regional Office of the Environmental Protection Agency, a copy of the notice pursuant to paragraph (d)(4)(iii) of this section shall be sent to the Administrator through the appropriate Regional Office.

(3) In accordance with Executive Order 11752, the Administrator's authority for implementing the procedures for conducting source review pursuant to this section shall not be delegated, other than to a Regional Office of the Environmental Protection Agency, for new or modified sources which are owned or operated by the Federal Government or for new or modified

sources located on Federal lands; except that, with respect to the latter category, where new or modified sources are constructed or operated on Federal lands pursuant to leasing or other Federal agreements, the Federal Land Manager may at his discretion, to the extent permissible under applicable statutes and regulations, require the lessee or permittee to be subject to new source review requirements which have been delegated to a State or local agency pursuant to this paragraph.

(4) The Administrator's authority for implementing the procedures for conducting source review pursuant to this section shall not be redelegated, other than to a Regional Office of the Environmental Protection Agency, for new or modified sources which are located in Indian reservations except where the State has assumed jurisdiction over such land under other laws, in which case the Administrator may delegate his authority to the States in accordance with paragraphs (g) (2), (3), and (4) of this section.

(h) On March 7, 1994, Indiana requested a revision to the State Implementation Plan (SIP) for New Source Review (NSR) to satisfy the requirements of the Clean Air Act Amendments of 1990. The Indiana 326 IAC regulations do not include a definition of ''federally enforceable''. On July 13, 1994, Pamela Carter, Attorney General of the State of Indiana, sent a letter to USEPA clarifying Indiana's interpretation of the definition of federally enforceable. The letter states that federally enforceable, e.g. as used in 326 IAC 2–3–1, should be interpreted in accordance with the federal definition at 40 CFR 51.165(a)(1)(xiv). The USEPA took the opportunity of rulemaking on the State's submittal to recodify the permitting SIP to conform to Title 326 the Indiana Administrative Code.

[37 FR 10863, May 31, 1972, as amended at 38 FR 12698, May 14, 1973; 39 FR 4663, Feb. 6, 1974; 39 FR 7281, Feb. 25, 1974; 40 FR 50270, Oct. 29, 1975; 51 FR 40677, Nov. 7, 1986; 59 FR 51114, Oct. 7, 1994]

§52.781 Rules and regulations.

(a) [Reserved]

(b) A part of the second sentence in section 3, APC–17, which states ''Where there is a violation or potential violation of ambient air quality standards, existing emission sources or any existing air pollution control equipment shall comply with th

(c)–(d) [Reserved]

(e) Section 2(d) of APC–20, Fugitive Dust Emissions, is disapproved because it is unenforceable within the terms of the regulation.

(f) Subsections 3(b)(3) and 3(b)(5) of APC–2 (May 18, 1977) are disapproved because they are unenforceable within the terms of the regulation.

[37 FR 10863, May 31, 1972, as amended at 37 FR 15084, July 27, 1972; 38 FR 12698, May 14, 1973; 40 FR 50033, Oct. 28, 1975; 43 FR 26722, June 22, 1978]

§52.782 Request for 18-month extension.

(a) The requirements of §51.341 of this chapter are not met since the request for an 18-month extension for submitting that portion of the plan that implements the secondary standards for particulate matter in the Metropolitan Indianapolis Intrastate Region does not show that attainment of the secondary standards will require emission reductions exceeding those which can be achieved through the application of reasonably available control technology.

[37 FR 10863, May 31, 1972, as amended at 51 FR 40677, Nov. 7, 1986]

§52.783 [Reserved]

§52.784 Transportation and land use controls.

(a) To complete the requirements of subpart L and subpart G of this chapter, the Governor of Indiana must submit to the Administrator:

(1) No later than April 15, 1973, transportation and/or land use control strategies and a demonstration that said strategies, along with Indiana's presently adopted stationary source emission limitations for carbon monoxide and hydrocarbons and the Federal Motor Vehicle Control Program, will attain and maintain the national standards for carbon monoxide and photochemical oxidants (hydrocarbons) in the Metropolitan Indianapolis Intrastate Region by May 31, 1975. By such date (April 15, 1973), the State also must submit a detailed timetable for

implementing the legislative authority, regulations, and administrative policies required for carrying out the transportation and/or land use control strategies by May 31, 1975.

(2) No later than July 30, 1973, the legislative authority that is needed for carrying out such strategies.

(3) No later than December 30, 1973, the necessary adopted regulations and administrative policies needed to implement such strategies.

[38 FR 7326, Mar. 20, 1973, as amended at 51 FR 40676, Nov. 7, 1986]

§ 52.785 Control strategy: Carbon monoxide.

(a) The requirements of subpart G of this chapter are not met because the plan does not provide for attainment and maintenance of the national standards for carbon monoxide in the Metropolitan Indianapolis Intrastate Region by May 31, 1975.

[38 FR 16565, June 22, 1973, as amended at 51 FR 40676, Nov. 7, 1986]

§ 52.786 Inspection and maintenance program.

(a) Definitions:

(1) *Inspection and maintenance program* means a program to reduce emissions from in-use vehicles through identifying vehicles that need emission control related maintenance and requiring that such maintenance be performed.

(2) *Light-duty vehicle* means a motor vehicle rated at 6,000 lb. GVW (gross vehicle weight) or less.

(3) All other terms used in this section that are defined in part 51, subpart G of this chapter, are used herein with the meanings so defined.

(b) This regulation is applicable in the County of Marion, Indiana (including all cities, towns and municipal corporations therein).

(c) The State of Indiana shall establish and cause the implementation of an inspection and maintenance program applicable to all gasoline-powered light duty vehicles which are registered in Marion County. Such program shall conform with this § 52.786. The Consolidated City of Indianapolis, the County of Marion, and other municipalities within the County of Marion, shall take all legislative, executive, or other action necessary to establish and implement the program required by this regulation.

(d) Not later than April 1, 1975, the State of Indiana, the County of Marion and the Consolidated City of Indianapolis shall jointly submit to the Administrator, for his approval, legally adopted legislation and/or regulations establishing the regulatory scheme for the inspection/maintenance program required by paragraph (c) of this section. The legislation and/or regulations shall include:

(1) Provisions requiring inspection of all light-duty motor vehicles subject to the inspection program required by paragraph (c) of this section at periodic intervals no more than 1 year apart by means of an idle test. Any class or category of vehicles that are found to be rarely used on public streets and highways (such as classic or antique vehicles) may be exempted.

(2) Provisions for regulatory criteria that are consistent with achieving an 11 percent reduction of hydrocarbon emissions from light-duty vehicles.

(3) Provisions ensuring that failed vehicles receive, within 30 days, the maintenance necessary to achieve compliance with the inspection standards. These provisions shall impose sanctions against owners of non-complying vehicles, require retest of failed vehicles following maintenance, require a suitable distinctive tag or sticker for display on complying vehicles, and include such other measures as are necessary or appropriate.

(4) Provisions establishing a certification program to ensure that testing stations performing the required tests have the necessary equipment and knowledgeable operators to perform the tests satisfactorily, imposing sanctions against non-complying testing stations, and containing such other measures as necessary or appropriate to a testing program.

(5) Provisions prohibiting vehicles from being intentionally readjusted or modified subsequent to the inspection and/or maintenance in such a way as would cause them no longer to comply with the inspection standards. These may include authorization of spot

checks of idle adjustments or of a suitable type of physical seal or tag on vehicles. These provisions shall include appropriate penalties for violation by any person.

(6) Designation of agency or agencies responsible for conducting, overseeing, and enforcing the inspection/maintenance program. Private parties may be designated to conduct parts of the program to certify compliance.

(e) After July 1, 1976, the State of Indiana, County of Marion, the Consolidated City of Indianapolis, and other municipalities in Marion County shall not allow the operation on streets, roads, or highways under their ownership or control of any light duty motor vehicle subject to the inspection program established pursuant to paragraph (c) of this section that does not comply with the applicable standards and procedures adopted in accordance with paragraph (d) of this section.

(f) After July 1, 1976, no person shall operate or allow the operation of any motor vehicle subject to the inspection program established pursuant to paragraph (c) of this section that does not comply with the applicable standards and procedures adopted in accordance with paragraph (d) of this section.

(g) No later than October 1, 1974, the State of Indiana, County of Marion, and the Consolidated City of Indianapolis shall jointly submit to the Administrator, for his approval, a detailed compliance schedule showing the steps they will take to establish, operate and enforce the inspection program required by paragraph (c) of this section including:

(1) A detailed description of the inspection program required by paragraph (c) of this section (including a description of the way in which the program will be established, operated, and enforced and the respective responsibilities of the State, county, and municipalities for such tasks).

(2) A description of the legal authority for establishing and enforcing the inspection/maintenance program, including the text of proposed or adopted legislation and regulations.

(3) Specific dates (day, month, and year) by which various steps to implement the inspection/maintenance system will be completed, such steps to include, at a minimum, the following: submitting final plans and specifications for the system to the Administrator for this approval (this date to be no later than February 1, 1975), ordering necessary equipment (this date to be no later than April 15, 1975), commencement of onsite construction and/or installation, and system operational (this date to be no later than April 15, 1975, commencement of onsite construction and/ior installation, and system operational (this date to be no later than July 1, 1975).

(4) An identification of the sources and amounts of funds necessary to implement the system together with written assurances from the chief executive officers of the State, city, and county that they will seek such necessary funding from the appropriate legislative bodies.

(5) Other provisions necessary or appropriate to carry out the program.

(h) The State's December 2, 1992, commitment to timely adopt and implement enhanced inspection and maintenance (I/M) rules for Lake and Porter Counties is disapproved based on the failure of the State of Indiana to meet important milestones pertaining to the development and adoption of necessary authority for the I/M program. This disapproval initiates the sanction process of section 179(a) of the Act.

[39 FR 12348, Apr. 5, 1974, as amended at 46 FR 38, Jan. 2, 1981; 51 FR 40677, Nov. 7, 1986; 55 FR 31052, July 31, 1990; 58 FR 62535, Nov. 29, 1993]

§52.787 Gasoline transfer vapor control.

(a) *Gasoline* means any petroleum distillate having a Reid vapor pressure of 4 pounds or greater.

(b) This section is applicable in the County of Marion, Indiana (including all cities, towns and municipal corporations therein).

(c) No person shall transfer or permit the transfer of gasoline from any delivery vessel into any stationary source container with a capacity greater than 250 gallons unless such container is equipped with a submerged fill pipe and unless the displaced vapors from the storage container are processed by a control system that prevents release to

the atmosphere of no less than 90 percent by weight of organic compounds in said vapors displaced from the stationary storage container location. The control system shall include one or more of the following:

(1) A vapor-tight return line from the storage container to the delivery vessel and a system that will ensure that the vapor return line is connected before gasoline can be transferred into the container. If a ''vapor-balance return'' system is used to meet the requirements of this section, the system shall be so constructed as to be readily adapted to retrofit with an adsorption system, refrigeration-condensation system or equivalent system connected to the stationary storage container.

(2) Refrigeration-condensation system or adsorption system connected to the stationary storage container.

(3) An equivalent system, approved by the Administrator or his designee, designed to recover or eliminate no less than 90 percent by weight of the organic compounds in the displaced vapor.

(d) No person shall own or operate a delivery vessel containing gasoline unless the delivery vessel is so designed and maintained as to be vapor-tight at all times. This paragraph (d) shall not apply to delivery vessels in transit through Marion County which neither are filled nor deliver gasoline therein, nor shall this paragraph (d) be construed to prohibit safety-valves on other devices required by governmental safety regulations. Delivery vessels which are filled in Marion County but do not deliver in Marion County may be controlled only for filling.

(e) No person shall own or operate a facility for the filling of delivery vessels with gasoline unless the facility is equipped with a control system, which can recover or eliminate at least 90 percent by weight of the organic compounds in the vapors displaced from the delivery vessel during refilling. Facilities which have a daily throughput of 20,000 gallons or less are required to have a vapor recovery system in operation no later than May 31, 1977. Delivery vessels and storage containers served exclusively by facilities required to have a vapor recovery system in operation no later than May 31, 1977, also will be required to meet the provisions of this section no later than May 31, 1977.

(f) After March 1, 1976, no person shall intentionally release gasoline vapors from a delivery vessel, except to a control system that can recover or eliminate at least 90 percent by weight of organic compounds in the vapors released.

(g) The provisions of paragraph (c) of this section shall not apply to the following:

(1) Stationary containers having a capacity less than 550 gallons used exclusively for the fueling of farming equipment.

(2) Any stationary container having a capacity less than 2,000 gallons installed prior to promulgation of this paragraph.

(3) Transfer made to storage tanks equipped with floating roofs or their equivalent.

(4) Gasoline storage compartments of 1,000 gallons or less in gasoline delivery vessels in use on the promulgated date of this regulation will not be required to be retrofitted with a vapor return system until January 1, 1977.

(h) The operation of a source, otherwise, subject to paragraph (c), (d), or (e) of this section, shall not be a violation of paragraph (c), (d), or (e), respectively, if the following acts shall be completed with respect to such source before the following dates:

(1) October 1, 1974. The owner of the source or his designee shall submit to the Administrator, a final control plan, which describes at a minimum the steps that will be taken by the source to achieve compliance with the applicable provisions of paragraphs (c), (d), and (e) of this section.

(2) March 1, 1975. Negotiate and sign all necessary contracts for control systems, or issue orders for the purchase of component parts to accomplish emission control.

(3) May 1, 1975. Initiate on-site construction or installation of control system equipment.

(4) February 1, 1976. Complete on-site construction or installation of control system equipment.

(5) March 1, 1976. Achieve final compliance with the applicable provisions

of paragraphs (c), (d), and (e) of this section.

(6) Any owner of a source subject to the compliance schedule in this paragraph shall certify to the Administrator, within 5 days after the deadline for each increment of progress, whether or not the required increment of progress has been met.

(i) As an alternative to compliance with the schedule under paragraph (h) of this section:

(1) The owner of a source which is in compliance with the provisions of paragraph (c), (d), or (e) of this section, shall certify such compliance to the Administrator by October 1, 1974. The Administrator may request whatever supporting information he considers necessary for proper certification.

(2) A source for which a compliance schedule is adopted by the State and approved by the Administrator may operate in conformity with such compliance schedule.

(3) The owner of a source may submit to the Administrator, by October 1, 1974, a proposed alternative compliance schedule. No such schedule may provide for compliance after March 1, 1976. Until promulgated by the Administrator, such source shall conform with applicable portions of paragraph (c), (d), (e), or (h) of this section. Upon promulgation of the compliance schedule by the Administrator, no person shall own or operate the source except in conformity with the promulgated schedule.

(j) Nothing in this section shall preclude the Administrator from promulgating a separate schedule for any source to which the application of the compliance schedule in paragraph (h) of this section fails to satisfy the requirements of §51.15 (b) and (c) of this chapter.

(k) Any new container, facility, or vessel subject to this regulation that is placed in operation after October 1, 1974, shall within 30 days of commencing operation submit a compliance schedule in conformity with paragraph (i) of this section and shall otherwise comply with this section. Any facility subject to this regulation that is placed in operation after March 1, 1976, shall comply with the applicable requirements of this section immediately upon commencing operation.

[39 FR 12349, Apr. 5, 1974, as amended at 39 FR 41253, Nov. 26, 1974; 41 FR 56643, Dec. 29, 1976; 42 FR 29004, June 7, 1977]

§52.788 Operating permits.

Emission limitations and other provisions contained in operating permits issued by the State in accordance with the provisions of the federally approved permit program shall be the applicable requirements of the federally approved State Implementation Plan (SIP) for Indiana for the purpose of sections 112(b) and 113 of the Clean Air Act and shall be enforceable by the United States Environmental Protection Agency (USEPA) and any person in the same manner as other requirements of the SIP. USEPA reserves the right to deem an operating permit not federally enforceable. Such a determination will be made according to appropriate procedures, and be based upon the permit, permit approval procedures or permit requirements which do not conform with the operating permit program requirements or the requirements of USEPA's underlying regulations.

[60 FR 43012, Aug. 18, 1995]

§§52.789—52.792 [Reserved]

§52.793 Significant deterioration of air quality.

(a) The requirements of sections 160 through 165 of the Clean Air Act are not met, since the plan does not include approvable procedures for preventing the significant deterioration of air quality.

(b) *Regulations for preventing significant deterioration of air quality*. The provisions of §52.21(b) through (w) are hereby incorporated and made a part of the applicable state plan for the State of Indiana.

(c) All applications and other information required pursuant to §52.21 from sources located in the State of Indiana shall be submitted to the Commissioner, Indiana Department of Environmental Management, 105 South Meridian Street, P.O. Box 6015, Indianapolis, IN 46206.

[45 FR 52741, Aug. 7, 1980, as amended at 53 FR 18985, May 26, 1988]

§ 52.794 Source surveillance.

(a) The requirements of 51.212 of this chapter are not met by the phrase ''for more than a cumulative total of 15 minutes in a 24-hour period'' contained in section 1 of APC–3 of the Indiana Air Pollution Control Regulations.

(b) [Reserved]

(c) 325 IAC 5–1 (October 6, 1980, submittal—§ 52.770(c)(53)) is disapproved for the Lake County sources specifically listed in Table 2 of 325 IAC 6–1–10.2 (§ 52.770(c)(57)); for pushing and quenching sources throughout the State (August 27, 1981, 325 IAC 11–3–2 (g) and (h)—§ 52.770(c)(42)); and for coke oven doors in Lake and Marion Counties (325 IAC 11–3–2(f)—§ 52.770(c)(42)). Applicability of this regulation to these sources is being disapproved because 325 IAC 5–1 does not meet the enforceability requirements of § 51.22 as it applies to these sources. Opacity limits in 325 IAC 6–1–10.2 and certain opacity limits in 325 IAC 11–3 supersede those in 325 IAC 5–1, and USEPA has previously disapproved these superseding regulations (§ 52.776 (j), (g), and (f), respectively).

[40 FR 50033, Oct. 28, 1975; 41 FR 3475, Jan. 23, 1976, as amended at 48 FR 55860, Dec. 16, 1983; 51 FR 40676, 40677, Nov. 7, 1986; 52 FR 3644, Feb. 5, 1987; 52 FR 23038, June 17, 1987]

§ 52.795 Control strategy: Sulfur dioxide.

(a) Revised APC–13 (December 5, 1974 submission) of Indiana's Air Pollution Control regulations (sulfur dioxide emission limitation) is disapproved insofar as the provisions identified below will interfere with the attainment and maintenance of the suffix dioxide ambient air quality standards:

(1) The phrase ''equivalent full load'' in section 1(b)(2).

(2) The formula ''E_p=17.0 $Q_m^{0.67}$ where E_p=E_m×Q_m'' in section 2(a).

(3) The phrase ''Direct fired process operations'' in sections 2(a), 3(c), 4(b), and 4(c).

(4) The modification of Q_m for non-Indiana coal as expressed in Section 2(a).

(b) The requirements of § 51.281 are not met by Warrick and Culley electrical generating stations enforcement orders which would revise the sulfur dioxide emission limitations for these two stations.

(c) The requirements of § 51.110(e) are not met by Wayne, Dearborn, Jefferson, Porter, and Warrick Counties.

(d)—(e) [Reserved]

[41 FR 35677, Aug. 24, 1976, as amended at 42 FR 34519, July 6, 1977; 47 FR 10825, Mar. 12, 1982; 47 FR 39168, Sept, 7 1982; 49 FR 585, Jan. 5, 1984; 51 FR 40676, 40677, Nov. 7, 1986; 53 FR 1358, Jan. 19, 1988; 54 FR 2118, Jan. 19, 1989]

§ 52.796 Industrial continuous emission monitoring.

(a) APC–8, Appendix I 1.2.3, 3.3, and 6.0 are disapproved because they do not meet the requirements of 40 CFR 51.214.

(b)(1) The requirements of 40 CFR 51, Appendix P 3.3 are hereby incorporated and made a part of the applicable implementation plan for the State of Indiana.

(2) APC–8 does not apply to any source scheduled for retirement by October 6, 1980, or within five years after the promulgation of continuous emission monitoring requirements for that source category in 40 CFR part 51, Appendix P 1.1, provided that adequate evidence and guarantees are provided that clearly show that the source will cease operations on or before such date.

[43 FR 26722, June 22, 1978, as amended at 51 FR 40677, Nov. 7, 1986]

§ 52.797 Control strategy: Lead.

Indiana's control strategy for lead is approved except as noted below:

(a)—(b) [Reserved]

(c) On January 12, 1988, Indiana'a Office of Air Management (OAM), Indiana Department of Environmental Management, agreed to review all relevant hood designs and performance guidance to determine which criteria to use in determining ongoing compliance with the capture efficiency provisions in 326 IAC 15–1 for Quemetco, Inc., and Refined Metals. Because these efficiencies are closely related to equipment design, OAM believes that a review of the process and control equipment designs and operating paramenters should provide the necessary determination of compliance. OAM will work with the

Indianapolis local agency, the Indianapolis Air Pollution Control Division, on viable alternatives and will keep USEPA up to date on its progress. OAM anticipates that specific criteria for determining compliance will be incorporated into the sources' operation permits (and forwarded to USEPA for informational purposes), and, should the opportunity arise, 326 IAC 15–1 will be revised to similarly incorporate capture efficiency criteria.

[53 FR 12905, Apr. 19, 1988, as amended at 53 FR 38722, Oct. 3, 1988; 54 FR 33896, Aug. 17, 1989]

§52.798 Small business stationary source technical and environmental compliance assistance program.

The Indiana program submitted on January 14, 1993, as a requested revision to the Indiana State Implementation Plan satisfies the requirements of section 507 of the Clean Air Act Amendments of 1990.

[58 FR 46544, Sept. 2, 1993]

Subpart Q—Iowa

§52.820 Identification of plan.

(a) Title of plan: ''State of Iowa Air Pollution Control Implementation Plan.''

(b) The plan was officially submitted on January 27, 1972.

(c) The plan revisions listed below were submitted on the dates specified:

(1) Request for a two-year extension to meet the National Primary and Secondary Ambient Air Quality Standards for nitrogen dioxide in the Metropolitan Omaha-Council Bluffs Interstate Air Quality Control Region was submitted by the Governor on January 27, 1972. (Non-regulatory)

(2) Revisions of Appendices D and G of the plan were submitted on February 2, 1972, by the State Department of Health. (Non-regulatory)

(3) Source surveillance and record maintenance statements were submitted on April 14, 1972, by the State Department of Health. (Non-regulatory)

(4) Revised statement regarding public availability of emission data was submitted on May 2, 1972, by the State Department of Health. (Non-regulatory)

(5) State submitted Senate File 85 which created the Department of Environmental Quality and replaced the Iowa air pollution control statute which appeared as Chapter 136B of the Code of Iowa, on May 4, 1972. (Regulatory)

(6) A letter describing the issuance of a Certificate of Acceptance for the local air pollution control programs conducted by the Linn County Board of Health for the jurisdictions of the City of Cedar Rapids and Linn County, and the Des Moines-Polk County Health Department for the jurisdictions of the City of Des Moines and Polk County was submitted by the State Department of Health on December 14, 1972. (Non-regulatory)

(7) Compliance schedules were submitted by the State in February 1973. (Regulatory)

(8) Compliance schedules were submitted by the State in May 1973. (Regulatory)

(9) The State of Iowa High Air Pollution Episode Contingency Plan was submitted on June 20, 1973, by the Governor.

(10) The letter which requested the inclusion of the Linn County Health Department Rules and Regulations, the City of Cedar Rapids Air Pollution Control Ordinance, the Polk County Rules and Regulations—Air Pollution Control, and the City of Des Moines Air Pollution Control Regulations in the State of Iowa implementation plan was submitted by the State Department of Environmental Quality on June 25, 1974. (No approval action was taken on the request because it did not meet the procedural requirements specified in 40 CFR part 51.)

(11) Revisions of Rules 2.1, 3.1, 3.4, 4.1, 4.3(3) and 4.3(4) of the Iowa Rules and Regulations Relating to Air Pollution Control were submitted on April 24, 1974 (by the Governor's office). (No approval or disapproval action was taken on amended Subrule 4.3(3)a., which restricts emissions of sulfur oxides from fuel-burning sources.) (Regulatory)

(12) Compliance schedules were submitted by the State in May 1974.

(13) Compliance schedules were submitted by the State in May 1974.

(14) Compliance schedules were submitted by the State in July 1974.

(15) Compliance schedules were submitted by the State in August 1974.

(16) A letter from the Director of the Department of Environmental Quality, dated August 29, 1974, which requested that no further action be taken on Subrule 4.3(3) a. as submitted on April 24, 1974. (Regulatory)

(17) Compliance schedules were submitted by the State in September 1974.

(18) Compliance schedules were submitted by the State in November 1974.

(19) Compliance schedules were submitted by the State in February 1975.

(20) Compliance schedules were submitted by the State in April 1975.

(21) Compliance schedules were submitted by the State in June 1975.

(22) Revisions of Rules 1.2, 2.1, 3.1, 3.4, 4.1, 4.2, 4.3, 5.1, 7.1, 8.3 and 8.4 of the Iowa Rules and Regulations Relating to Air Pollution Control were submitted on July 17, 1975, by the Governor's office. (Regulatory) (No approval or disapproval action was taken on Subrules 4.3(2)c. or 4.3(3)b.)

(23) Summary of the public hearing which was held on the revised rules which were submitted on July 17, 1975, by the Governor's office was submitted by the Iowa Department of Environmental Quality on September 3, 1975. (non-regulatory)

(24) Letter which withdrew amended Subrule 4.3(2)c. from the proposed Iowa plan revision submitted on July 17, 1975, was submitted by the Governor's office on January 20, 1976.

(25) Revisions to Rules 1.2, 2.1, 3.1, 3.2, 4.1, 4.3, 4.4, and new Chapters 14 and 52 of the Iowa Administrative Code Relating to Air Pollution Control were submitted June 9, 1976, by the Department of Environmental Quality (Subrules 4.3(3)a(1) and 4. 3(3)a(5) were disapproved).

(26) Additional air quality modeling to support the sulfur dioxide emission standards of Subrules 4.3(3)a(1) and 4.3(3)a(2) was submitted March 4, 1977, by the Department of Environmental Quality (Non-regulatory).

(26a) Revisions of Rules 1.2, 4.3(2)b, 4.4(6), 4.4(12) and of Chapter 7 of the Iowa Administrative Code relating to Air Pollution Control were submitted June 20, 1977, by the Department of Environmental Quality.

(27) Nonattainment plan provisions as required by the Clean Air Act Amendments of 1977 were submitted on June 22, 1979, by the Department of Environmental Quality. The submission included amended rule 4.3(2) relating to fugitive dust and new rule 4.5 relating to offsets for particulate matter. The revisions included attainment plans for particulate in Mason City and Davenport, particulate and ozone in Cedar Rapids and particulate and carbon monoxide in Des Moines. The submission was disapproved in part for failure to meet the requirements of Section 173 and was conditionally approved with respect to several requirements.

(28) On October 8, 1979, the Iowa Department of Environmental Quality submitted additional information to support the June 22, 1979, submission.

(29) On November 16, 1979, the Iowa Air Quality Commission submitted additional information and commitments to allow approval or conditional approval of portions of the June 22, 1979, submission.

(30) Nonattainment plan provisions as required by the Clean Air Act Amendments of 1977 were submitted on April 18, 1980, by the Department of Environmental Quality. The submission included amended rule 4.3(2) relating to fugitive dust and amended rule 3.5 relating to particulate matter offsets. The revisions included plans to attain the secondary particulate standards for all areas designated nonattainment as of March 6, 1980. The submission was conditionally approved with respect to several requirements.

(31) The State of Iowa Lead State Implementation Plan was submitted on August 19, 1980 by the Director of the Department of Environmental Quality.

(32) Additional information to support the April 18, 1980 submission was submitted on September 16, 1980, by the Department of Environmental Quality.

(33) Additional information to support the April 18, 1980 submission was submitted on November 17, 1980, by the Department of Environmental Quality.

(34) A revised Chapter 5, dealing with excess emissions and malfunctions was submitted on December 23, 1980, by the Department of Environmental Quality.

(35) [Reserved]

(36) A letter was submitted dated January 19, 1981 by the Director of the Department of Environmental Quality which provided additional information concerning the Iowa Lead State Implementation Plan.

(37) A variance from 400—4.2(1) of the Iowa Administrative Code for the Iowa Army Ammunition Plant at Middletown, Iowa, was submitted on October 19, 1979 by the Executive Director.

(38) Revisions to Subrule 400—4.3(2)''c'' relating to fugitive emissions control and a document describing how this subrule is to be enforced were submitted on June 1, 1981, by the Department of Environmental Quality.

(39) A schedule for studying nontraditional sources of particulate matter and for implementing the results of the studies in the form of control strategies was submitted on June 26, 1981 by the Department of Environmental Quality. (Non-Regulatory).

(40) Revisions to Subrule 400—4.3(2)''b'' relating to particulate emissions from fuel burning sources were submitted on July 31, 1981, by the Department of Environmental Quality.

(41) The Iowa Ambient Air Monitoring Strategy was submitted July 15, 1981, by the Department of Environmental Quality (non-regulatory).

(42) A conditional permit containing an alternative emission reduction program for the Progressive Foundry, Inc., of Perry, Iowa, under 400–3.7 and 400–4.6 of the Iowa Administrative Code; and an administrative order setting forth a compliance schedule, were submitted on December 18, 1981, by the Executive Director. The conditional permit specifies particulate emissions not to exceed 16.3 pounds per hour from the gray iron cupola with a process weight rate not to exceed 8534 pounds per hour and specifies the casting shakeout exhaust system shall not exceed 0.05 grains per standard cubic foot nor 12.8 pounds per hour of particulate matter. The compliance schedule specifies a final compliance date of September 1, 1983.

(43) On July 1, 1983, the State's air pollution control regulations were recodified at Department 900, Title II, Chapters 20 through 29.

(44) Revised Chapter 22 regulations, dealing with new source review in nonattainment areas, were submitted on July 18, 1984, by the Iowa Department of Water, Air and Waste Management. Subrules 22.5(4) g, i, and j remain unapproved. EPA will temporarily defer action on these subrules pending a May 14, 1985, commitment from the State to submit appropriate revisions.

(i) Incorporation by reference. Revised Chapter 22 regulations, dealing with new source review in nonattainment areas, adopted by the State on July 17, 1984.

(ii) Additional material. May 14, 1985, letter of commitment from the State to revise unapprovable portions of their Chapter 22 air pollution regulations.

(45) Revised Chapter 22 subrules 22.5(2) a and b; and revised subrules 22.5(4) g, i, and j, all relating to new source review in nonattainment areas, were submitted on December 31, 1985, by the Iowa Department of Water, Air and Waste Management.

(a) Incorporation by reference.

(i) Revised Chapter 22 subrules 22.5(2) a and b; and subrules 22.5(4) g, i, and j, adopted by the State on December 17, 1985.

(ii) April 22, 1986, letter of commitment from the Iowa Department of Water, Air and Waste Management to submit stack height regulations by May 30, 1986, and to implement EPA's stack height requirements until such time that the regulations are fully approved.

(46) Revised Chapter 22 regulations pertaining to new source review in attainment and unclassified areas of the state (PSD) were submitted on March 9, 1987, by the Iowa Department of Natural Resources.

(i) Incorporation by reference.

(A) Iowa Administrative Bulletin (ARC 7446), amendments to Chapter 22, ''Controlling Pollution,'' adopted by the Iowa Environmental Protection Commission on February 17, 1987.

(B) Letter from Iowa dated April 22, 1987, committing to implementation of its stack height regulations in a manner consistent with EPA's stack height regulations with respect to new source review/PSD regulations.

(47) Revised Chapters 22 and 23 regulations pertaining to stack height credits for modeling purposes were submitted on May 20, 1986, by the Iowa Department of Natural Resources. Revised definition of ''emission limitation'' and ''emission standard'' at Iowa regulation 567.20.2(455B), Definitions.

(i) Incorporation by reference

(A) Iowa Administrative Bulletin (ARC 6566), amendments to Chapter 22, ''Controlling Pollution'' and Chapter 23, ''Emission Standards for Contaminants'' adopted by the Iowa Environmental Protection Commission on April 22, 1986, effective June 25, 1986.

(B) Iowa Administrative Bulletin (ARC 8023) amendment to 567–20.2(455B). Effective September 22, 1987.

(48) Revised Chapter 22, subrule 22.1(2)''d'' exemptions from permit requirements were submitted on September 13, 1988, by the Iowa Department of Natural Resources. The revision clarifies permit exemptions for certain grain roasting equipment.

(i) Incorporation by reference.

(A) Amendment to Chapter 22, ''Controlling Pollution,'' Iowa Administrative Code, subrule 22.1(2)''d'', effective September 14, 1988.

(49) Revised Polk County, Iowa, Board of Health Rules and Regulations, Chapter V, Air Pollution, submitted by the Iowa Department of Natural Resources on February 3, 1988. EPA approves these regulations with the provision that any operating permit which changes any requirement of the Iowa SIP, including requirements in any construction permit, must be submitted to EPA, and approved, as a SIP revision. In the absence of such approval, the enforceable requirements shall be those in the Iowa SIP.

(i) Incorporation by reference.

(A) Ordinance No. 28, Amendment to Polk County Board of Health Rules and Regulations chapter V, Air Pollution, Article I, 5–1 and 5–2 (except for variance); Article II, 5–3; and Article X, 5–28 through 5.50–1 (except for 5–49 and 5–50), effective October 8, 1987.

(ii) Additional material.

(A) None.

(50) Revised Linn County, Iowa, Chapter 10 Ordinance ''Air Pollution Control'' submitted as a SIP revision by the Iowa Department of Natural Resources on February 3, 1988. EPA approves these regulations with the provision that any operating permit which changes any requirement of the Iowa SIP, including requirements in any construction permit, must be submitted to EPA, and approved, as a SIP revision. In the absence of such approval, the enforceable requirements shall be those in the Iowa SIP.

(i) Incorporation by reference.

(A) Linn County Chapter 10 Ordinance ''Air Pollution Control'' sections 10.1 (except for 10.1(50)), 10.2, 10.3, and 10.4, adopted by the Linn County Board of Supervisors on September 2, 1987.

(ii) Additional material.

(A) None.

(51) Revised Iowa regulations pertaining to PM_{10} were submitted by the state on October 28, 1988. These rules became effective on December 21, 1988.

(i) Incorporation by reference.

(A) Amended Iowa Administrative Code pertaining to the prevention, abatement, and control of air pollution: Chapter 20, ''Scope of Title—Definitions—Forms—Rules of Practice;'' Chapter 22, ''Controlling Pollution;'' Chapter 26, ''Prevention of Air Pollution Emergency Episodes;'' and Chapter 28, ''Ambient Air Quality Standards,'' effective December 21, 1988.

(ii) Additional information.

(A) None.

(52) Revised chapter 22, subrule 22.4(1), submitted on May 7, 1990, incorporates by reference revised EPA Modeling Guideline Supplement A, July 1987, and recodified air quality rules chapter 20–29.

(i) Incorporation by reference.

(A) Amendment to chapter 22, ''Controlling Pollution,'' Iowa Administrative Code, subrule 22.4(1). Effective March 14, 1990.

(B) Recodification of Iowa Administrative Code, title II—Air Quality, chapters 20–29, effective December 3, 1986.

(53) Revised chapter 22, rule 22.4(455B), submitted on November 8, 1990, incorporates by reference revised EPA PSD rules pertaining to NO_x increments.

(i) Incorporation by reference

(A) Amendment to chapter 22, ''Controlling Pollution,'' Iowa Administrative Code, subrule 22.4, adopted by the

Environmental Protection Commission on October 17, 1990, effective November 21, 1990.

(ii) Additional material

(A) Letter from the state dated November 8, 1990, pertaining to NO_x rules and analysis which certifies the material was adopted by the state on October 17, 1990.

(54) On March 13, 1991, the Iowa Department of Natural Resources (IDNR) submitted a plan revision pertaining to major SO_2 sources in Clinton County, Iowa.

(i) *Incorporation by reference.* (A) Administrative Consent Order #90–AQ–10, signed by Larry Wilson, Director, IDNR, dated July 5, 1990, and revision dated March 25, 1991. Also, three letters to Archer-Daniels-Midland (ADM) Company dated June 20, 1990, signed by Michael Hayward, IDNR, which contain or reference new or revised permit conditions for ADM sources, and a letter to ADM from IDNR dated February 26, 1991, correcting certain permit provisions.

(B) Administrative Consent Order #89–AQ–04, signed by Larry Wilson, Director, IDNR, dated February 21, 1990. Also, two letters to Interstate Power Company dated January 25 and 29, 1990, and signed by Michael Hayward, IDNR, which contain supplemental permit condition for permits 74-A-117-S and 78–A–157–S.

(ii) *Additional material.* (A) Letter and supplemental material from Larry J. Wilson to Morris Kay dated March 13, 1991.

(55) Revised Polk County, Iowa Board of Health Rules and Regulations, chapter V, Air Pollution, submitted by the Iowa Department of Natural Resources on May 23, 1991.

(i) *Incorporation by reference.* (A) Polk County Board of Health Rules and Regulations, chapter V, Air Pollution, Ordinances 28, 72 and 85, effective May 1, 1991, except for the following: Article I, definition of variance; Article VI, Section 5–16 (n), (o), and (p); Article VI, Section 5–17(d), variance provision; Article VIII; Article IX, Sections 5–27(3) and 5–27(4); and Article X, Division 5—Variance.

(ii) *Additional material.* (A) Letter from Allan Stokes to William A. Spratlin dated October 23, 1991.

(56) Revised Chapter 23, rule 23.2, submitted on October 3, 1991, incorporates changes to the open burning rule.

(i) Incorporation by reference.

(A) Amendment to Chapter 23, ''Emission Standards for Contaminants, ''Iowa Administrative Code, subrule 23.2, adopted by the Environmental Protection Commission, effective September 12, 1990.

(ii) Additional information.

(A) Letter from Allan Stokes, IDNR, to William Spratlin, dated October 3, 1991.

(57) On January 5, 1993, the Iowa Department of Natural Resources (IDNR) submitted air quality rule revisions to Iowa Administrative Code, Chapters 20, 22, 23, 24, 25, 29, and revisions to the Compliance Sampling Manual.

(i) Incorporation by reference.

(A) Revisions to Chapter 20 (20.2), Scope of Title-Definitions-Forms-Rules of Practice; Chapter 22 (22.3(1), 22.4, 22.5(2)), Controlling Pollution; Chapter 23 (23.2(3), 23.3(2), 23.3(3), 23.4(12)), Emission Standards for Contaminants; Chapter 24 (24.1(1), 24.1(5)), Excess Emission; Chapter 25, (25.1(7), 25.1(9)), Measurement of Emissions and rescind 25.1(10)d; and Chapter 29 (29.1), Qualification in Visual Determination of the Opacity of Emissions. These revisions were adopted by the Iowa Environmental Protection Commission on December 21, 1992, and became effective on February 24, 1993.

(ii) Additional material.

(A) Letter from Larry Wilson, IDNR, to Morris Kay, EPA, dated January 5, 1993, and the Compliance Sampling Manual, revised December 1992.

(58) A plan for implementation of the Small Business Stationary Source Technical and Environmental Compliance Assistance Program was submitted by the Iowa Department of Natural Resources as a revision to the Iowa SIP on December 22, 1992.

(i) Incorporation by reference.

(A) Revisions to the Iowa State Implementation Plan for the Small Business Stationary Source Technical and Environmental Compliance Assistance Program dated December 1992.

(59) On May 5, 1994, the Director of the Iowa Department of Natural Resources submitted revisions to the State Implementation Plan (SIP) to

update the state's incorporation by reference and conformity to various federally approved regulations.

(i) Incorporation by reference.

(A) Revised rules, ''Iowa Administrative Code,'' effective January 12, 1994. This revision approves an amendment to paragraph 23.2(3)g pertaining to open fires burned for the purpose of training fire-fighting personnel.

(B) Revised rules, ''Iowa Administrative Code,'' effective April 20, 1994. This revision approves amendments to rules 22.4; 23.3(2)d (3) and (4); 23.4(6); and 25.1(9). These rules concern the update of the state's incorporation of prevention of significant deterioration and test method requirements.

(ii) Additional material. None.

(60) On May 5, 1994, the Director of the Iowa Department of Natural Resources submitted revisions to the State Implementation Plan (SIP) to update the state's incorporation by reference and conformity to various Federally approved regulations.

(i) Incorporation by reference.

(A) Revised rules, ''Polk County Ordinance No. 132—Polk County Board of Health Rules and Regulations,'' effective December 2, 1993. This revision approves all articles in Chapter V, except for Article VI, Section 5–16(n) and (p), Article VIII, and Article XIII.

(ii) Additional material.

(A) None.

(61) On October 18, 1994, and January 26, 1995, the Director of the Iowa Department of Natural Resources submitted revisions to the state implementation plan (SIP) to include special requirements for nonattainment areas, provisions for use of compliance, and enforcement information and adoption of EPA definitions. These revisions fulfill Federal regulations which strengthen maintenance of established air quality standards.

(i) Incorporation by reference.

(A) Revised rules ''Iowa Administrative Code,'' effective November 16, 1994. This revision approves revised rules 567–20.2, 567–22.5(1)a, 567–22.5(1)f(2), 567–22.5(1)m, 567–22.5(2), 567–22.5(3), 567–22.5(4)b, 567–22.5(6), 567–22.5(7), 567–22.105(2), and new rule 567–21.5. These rules provide for special requirements for nonattainment areas, provisions for use of compliance and enforcement information and adopts EPA's definition of volatile organic compound.

(B) Revised rules, ''Iowa Administrative Code,'' effective February 22, 1995. This revision approves new definitions to rule 567–20.2. This revision adopts EPA's definitions of ''EPA conditional method'' and ''EPA reference method.''

(ii) Additional material.

None.

(62) [Reserved]

(63) On December 8, 1994; February 16, 1996; and February 27, 1996, the Director of the Iowa Department of Natural Resources submitted revisions to the State Implemenation Plan (SIP) to create a voluntary operating permit program as an alternative to Title V. These revisions strengthen maintenance of established air quality standards.

(i) Incorporation by reference.

(A) ''Iowa Administrative Code,'' sections 567–22.200–22.208, effective December 14, 1994. These rules create the voluntary operating permit program.

(B) ''Iowa Administrative Code,'' sections 567–22.201(1)''a'' and 22.206(1)''h'', effective January 11, 1995.

(C) ''Iowa Administrative Code,'' section 567–22.203(1)''a''(1), effective February 24, 1995.

(D) ''Iowa Administrative Code,'' sections 567–20.2; 22.200; 22.201(1)''a'' and ''b''; 22.201(2)''a''; and 22.206(2)''c'', effective October 18, 1995.

(ii) Additional material.

(A) Letter from Allan E. Stokes, Iowa Department of Natural Resources, to William A. Spratlin, U.S. EPA, dated February 16, 1995. This letter outlines various commitments by the state to meet requirements outlined by the EPA.

[37 FR 10865, May 31, 1972]

EDITORIAL NOTE: For FEDERAL REGISTER citations affecting § 52.820, see the List of CFR Sections Affected in the Finding Aids section of this volume.

§ 52.821 Classification of regions.

The Iowa plan was evaluated on the basis of the following classification:

Air quality control region	Pollutant				
	Particulate matter	Sulfur oxides	Nitrogen dioxide	Carbon monoxide	Photochemical oxidants (hydrocarbons)
Metropolitan Omaha-Council Bluffs Interstate	I	II	III	III	III
Metropolitan Sioux Falls Interstate	II	III	III	III	III
Metropolitan Sioux City Interstate	III	III	III	III	III
Metropolitan Dubuque Interstate	I	III	III	III	III
Metropolitan Quad Cities Interstate	I	III	III	III	III
Burlington-Keokuk Interstate	I	I	III	III	III
Northwest Iowa Intrastate	III	III	III	III	III
North Central Iowa Intrastate	IA	III	III	III	III
Northeast Iowa Intrastate	I	III	III	III	III
Southwest Iowa Intrastate	III	III	III	III	III
South Central Iowa Intrastate	I	III	III	III	I
Southeast Iowa Intrastate	III	III	III	III	III

[37 FR 10865, May 31, 1972, as amended at 39 FR 16346, May 8, 1974]

§52.822 Approval status.

(a) With the exceptions set forth in this subpart, the Administrator approves Iowa's plan for the attainment and maintenance of the national standards. Further, the Administrator finds the plan satisfies all requirements of Part D, Title I, of the Clean Air Act as amended in 1977, except as noted below.

[45 FR 14567, Mar. 6, 1980, as amended at 46 FR 47546, Sept. 29, 1981]

§52.823 PM_{10} State Implementation Plan Development in Group II Areas

The Iowa Department of Natural Resources committed to comply with the PM_{10} regulations as set forth in 40 CFR part 51. In a letter to Morris Kay, EPA, dated October 28, 1988, Mr. Larry J. Wilson, Director, Iowa Department of Natural Resources, stated:

Three groups within the State of Iowa have been classified as Group II areas for fine particulate (PM–10) State Implementation Plan (SIP) development purposes. This includes portions of the cities of Des Moines, Mason City, and Cedar Rapids. The specific boundaries of these areas were identified in a letter of October 13, 1987, from Peter R. Hamlin to Carl Walter. The remainder of the State was classified as Group III.

In accordance with the SIP development procedures identified in the preamble of the PM–10 regulations for Implementing Revised Particulate Matter Standards, promulgated July 1, 1987, the State of Iowa commits to perform the following activities in these three Group II areas of the state:

(a) Gather ambient PM–10 data, to an extent consistent with minimum EPA requirements (note the network description contained in a letter of January 26, 1988, from Peter R. Hamlin to John Helvig).

(b) Analyze and verify the ambient PM–10 data and report exceedances of the 24-hour PM–10 National Ambient Air Quality Standards (NAAQS) to the Regional Office within 60 days of each exceedance.

(c) Immediately notify the Regional Office:

(1) Upon the availability of an appropriate number of verifiable 24-hour NAAQS exceedances to indicate a violation (see Section 2.0 of the PM–10 SIP development guideline) or

(2) when an annual arithmetic mean (AAM) above the annual PM–10 NAAQS becomes available.

(d) Within thirty (30) days of any notification of the Regional Office pursuant to (c) above (or upon collection of thirty-six (36) months of PM–10 ambient air quality data acceptable to EPA, whichever comes first) determine whether the measures in the existing SIP will assure timely attainment and maintenance of the primary PM–10 NAAQS and immediately notify the Regional Office of the results of this determination.

(e) Within six (6) months of any notification pursuant to (d) above, adopt and submit to EPA a PM–10 control strategy that assures attainment as expeditiously as practicable but not later than three (3) years from approval of the Committal SIP.

Because of the uncertainty about when the determination can be made pursuant to (d) above, it is difficult to determine if that control strategy could provide for the attainment of the PM–10 NAAQS within three years from the date EPA approves thisCommittal SIP. Therefore, I reserve the right to request a two-year extension of the attainment date as provided in Section 110(e) of the Clean Air Act, if and when the State of Iowa submits a SIP revision for any of these areas of the state.

The State of Iowa also commits to develop a PM–10 emission inventory for the areas submitted as part of any PM–10 SIP pursuant to items (c), (d), and (e) above. If the PM–10 NAAQS are not violated, the State of Iowa will proceed with this inventory for the three Group II areas in accordance with the following schedule:

October 1, 1988—Request special assistance funds from EPA to perform the inventory.

October 1, 1989—Initiate inventory.

August 1, 1990—Complete inventory.

October 31, 1990*—Submit inventory as part of a determination of adequacy that the current SIP will attain and maintain the PM–10 NAAQS.

[54 FR 33539, Aug. 15, 1989]

§ 52.824 [Reserved]

§ 52.825 Compliance schedules.

(a) [Reserved]

(b) *Regulation for increments of progress.* (1) Except as provided in paragraph (b)(2) of this section, the owner or operator of any stationary source subject to regulation 4.3.(3)(b), ''Rules and Regulations Relating to Air Pollution Control of the Iowa Air Pollution Control Commission'' shall, no later than December 31, 1972, submit to the Administrator for approval, a proposed compliance schedule that demonstrates compliance with the applicable regulation as expeditiously as practicable but no later than January 1, 1975. The compliance schedule shall provide for periodic increments of progress towards compliance. The dates for achievement of such increments shall be specified. Increments of progress shall include, but not be limited to: Letting of necessary contract for construction or process changes, if applicable; initiation of construction; completion and start-up of control system; performance tests; and submittal of performance test analysis and results.

(2) Where any such owner or operator demonstrates to the satisfaction of the Administrator that compliance with the applicable regulations will be achieved on or before December 31, 1973, no compliance schedule shall be required.

(3) Any owner or operator who submits a compliance schedule pursuant to this paragraph shall, within 5 days after the deadline for each increment of progress, certify to the Administrator whether or not the required increment of the approved compliance schedule has been met.

(4) Any compliance schedule adopted by the State and approved by the Administrator shall satisfy the requirements of this paragraph for the affected source.

(c) The compliance schedules for the sources identified below are approved as revisions to the plan pursuant to § 51.104 and subpart N of this chapter. All regulations cited are air pollution control regulations of the State, unless otherwise noted.

IOWA

Source	Location	Regulation involved	Date adopted	Variance expiration date	Final compliance date
Iowa Army Ammunition Plant (explosive contaminated waste burning).	Middletown, Iowa.	400—4.2(1)	June 14, 1979	Feb. 28, 1982	Feb. 1982.
Progressive Foundry, Inc., cupola and casting shakeout area.	Perry	400–4.6	Nov. 6, 1981 ...	.....	Sept. 1, 1983.

NOTE 1: Linn County Health Department does not issue variances if source(s) is on an approvable compliance schedule.

NOTE 2: Polk County Department of Health does not issue variances if source(s) is on an accepted and approved compliance schedule.

NOTE 3: City of Des Moines, Department of Public Health does not issue variances if source(s) is on an accepted and approved compliance schedule.

[37 FR 10865, May 31, 1972]

EDITORIAL NOTE: For FEDERAL REGISTER citations affecting § 52.825, see the List of CFR Sections Affected in the Finding Aids section of this volume.

*Presuming that sufficient ambient data acceptable to EPA are collected by July 31, 1990, and available by September 30, 1990.

§§52.826–52.827 [Reserved]

§52.828 Enforcement.

(a) Sections 23(1)(b) and 13(7) of Senate File 85, Division II for Iowa are disapproved insofar as they permit the Air Quality Commission of the Iowa Department of Environmental Quality to issue abatement orders (1) that defer compliance with plan requirements beyond the dates required for attainment of the national standards, (2) without the approval of the Administrator, and (3) for reasons not permitted by the Clean Air Act.

(b) Regulation limiting administrative abatement orders:

(1) No order deferring compliance with a requirement of the Iowa Implementation Plan shall be issued by the Air Quality Commission of the Iowa Department of Environmental Quality which does not meet the following requirements:

(i) An order must require compliance with the plan requirement within the times and under the conditions specified in §51.261 (a) and (b) of this chapter.

(ii) An order may not defer compliance beyond the last date permitted by section 110 of the Act for attainment of the national standard which the plan implements unless the procedures and conditions set forth in section 110(f) of the Act are met.

(iii) An order shall not be effective until it has been submitted to and approved by the Administrator in accordance with §§51.104, 51.105, 51.261 and 51.262(a).

(2) Notwithstanding the limitations of paragraph (b)(1)(ii) of this section, an order may be granted which provides for compliance beyond the statutory attainment date for a national standard where compliance is not possible because of breakdowns ormalfunctions of equipment, acts of God, or other unavoidable occurrences. However, such order may not defer compliance for more than three (3) months unless the procedures and conditions set forth in section 110(f) of the Act are met.

[38 FR 30877, Nov. 8, 1973, as amended at 51 FR 40675, 40676, 40677, Nov. 7, 1986; 52 FR 24367, June 30, 1987]

§§52.829—52.832 [Reserved]

§52.833 Significant deterioration of air quality.

(a) The requirements of sections 160 through 165 of the Clean Air Act are met, except for sources seeking permits to locate on Indian lands in the state of Iowa; sources with permits issued by EPA prior to the effective date of the state's rules; and certain sources affected by the stack height rules described in a letter from Iowa dated April 22, 1987.

(b) Regulations for preventing significant deterioration of air quality.

The provisions of §52.21 (b) through (w) are hereby incorporated and made a part of the applicable state plan for the state of Iowa for sources wishing to locate on Indian lands; sources constructed under permits issued by EPA; and certain sources as described in Iowa's April 22, 1987, letter.

[52 FR 23982, June 26, 1987]

Subpart R—Kansas

§52.870 Identification of plan.

(a) Title of plan: ''State of Kansas Implementation Plan for the Attainment and Maintenance of National Air Quality Standards.''

(b) The plan was officially submitted on January 31, 1972.

(c) The plan revisions listed below were submitted on the dates specified.

(1) Various comments on the plan in response to the Regions review were submitted on March 24, 1972, by the State Department of Health. (Non-regulatory)

(2) The Emergency Episode Operations/Communications Manual for the Kansas City Interstate AQCR was submitted on April 6, 1972, by the State Department of Health. (Non-regulatory)

(3) Emergency Episode Operations/Communications Manual for all Kansas Intrastate AQCR's was submitted on February 15, 1973, by the State Department of Health. (Non-regulatory)

(4) Revisions of sections 28–19–6 through 15, 20–24, 30–32, 40–47, 50–52 and 55–58 of the State air pollution control regulations were submitted by the

State Department of Health on April 17, 1973.

(5) Letter from the Governor, dated May 29, 1973, concerning the attainment of CO emission standards. (Non-regulatory)

(6) An amendment to the State air quality control law, Senate Bill No. 30, dealing with public access to emission data was submitted on July 27, 1973, by the Governor.

(7) Revisions of sections 28–19–8, 9, 14, 22, 25 and and 47 of the State air pollution control regulations were submitted on February 6, 1974, by the Governor.

(8) Copy of the State's analysis and recommendations concerning the designation of Air Quality Maintenance Areas was submitted by letter from the State Department of Health on February 28, 1974. (Non-regulatory)

(9) Kansas submitted State Implementation Plan (SIP) revisions to attain the National Ambient Air Quality Standards on September 17, 1979 for Wyandotte and Johnson Counties, on October 22, 1979 for Douglas County, and on March 10, 1980 for Kansas City of the state designated nonattainment areas under section 107 of the Clean Air Act as amended in 1977. On September 22 and 25, 1980, the state submitted revised regulations on the control of volatile organic compounds and a regulation on the new source permit review program. Included in the plan are the following approved state air pollution control regulations:

(i) The VOC regulations which EPA approved as RACT: 28–19–61 Definitions, 28–19–62 Testing Procedures, 28–19–63 Automobile and Light Duty Trunk Surface Coating, 28–19–65 Petroleum Liquid Storage Tanks, 28–19–66 Petroleum Liquid Storage in External Floating Roof Tanks, 28–19–67 Petroleum Refineries, 28–19–68 Leaks from Petroleum Refinery Equipment, 28–19–69 Cutback Asphalt.

(ii) The New Source Permit Review regulation 28–19–16 through 16m which EPA conditionally approved as meeting the requirements of sections 172(b)(6); 172(b)(11)(A), and 173.

(iii) The Kansas City-Wyandotte County air pollution control regulations which have been adopted by both the Kansas City, Kansas Board of City Commissioners and the Wyandotte County Board of County Commissioners:

2A–1 Jurisdiction, 2A–2 Purpose, 2A–3 Definitions, 2A–4 Powers of the Board, 2A–5 Facts and Circumstances Pertinent to Orders of Joint Board, 2A–6 Right of Entry for Inspection, 2A–7 Time for Compliance Schedule, 2A–8 Variance, 2A–9 Circumvention of Chapter or Regulations, 2A–10 Air Pollution Nuisances Prohibited; Additional Emission Restrictions; Interference with the Enjoyment of Life and Property, 2A–11 Reserved, 2A–12 Confidential Information, 2A–13 Registration and Permit System; Exemptions, 2A–14 Review of New or Altered Sources, 2A–15 Public Hearings, 2A–16 Installations in which Fuel is Burned, 2A–17 Restriction of Emission of Particulate Matter from Industrial Processes, 2A–18 Open Burning Prohibition, 2A–19 Opacity Requirements, 2A–20 Exceptions Due to Breakdowns or Scheduled Maintenance, 2A–21 Preventing Particulate Matter from Becoming Air-Borne, 2A–22 Measurement of Emissions, 2A–23 Restriction of Emission of Odors, 2A–24 Sulfur Compound Emissions, 2A–24.1 Hydrocarbon Emissions; Stationary Sources, 2A–25 Control of Carbon Monoxide Emissions, 2A–26 Control of Nitrogen Oxide Emissions, 2A–26.1 Incinerators, 2A–27 Air Pollution Emergencies—General Provisions, 2A–28 Air Pollution Emergencies—Episode Criteria, 2A–29 Emission Reduction Requirements, 2A–30 Emergency Episode Plans, 2A–31 Penalties for Violation of Chapter or Air Pollution Control Regulations, and 2A–32 Conflict of Ordinances, Effect Partial Invalidity.

(10) The Kansas State Implementation Plan for lead was submitted on February 17, 1981, by the Governor of Kansas, along with a submittal letter which provided additional information concerning the Kansas State Implementation Plan for lead.

(11) Kansas submitted SIP revisions to attain and maintain the National Ambient Air Quality Standards for carbon monoxide on April 16, 1981, for the South Central Kansas Interstate Air Quality Control Region, Wichita nonattainment area. The plan included commitments to complete transportation control measures for the reduction of carbon monoxide from transportation related sources for the attainment of the national standards by December 31, 1982.

(12) A plan revision which makes modifications to the existing Kansas air quality surveillance network was submitted by the Kansas Department

of Health and Environment on October 16, 1981.

(13) Additional information to correct two plan deficiencies was submitted by the Kansas Department of Health and Environment on May 12, 1981.

(14) Letter and supporting documents submitted on September 15, 1981, from the Director of Air Quality and Occupational Health relating to reasonably available control technology for certain particulate matter sources in the Kansas City, Kansas area.

(15) New regulations 28–19–70 and 28–19–62 applicable to tank trucks operating at bulk gasoline terminals were submitted by the Kansas Department of Health and Environment on June 15, 1982. State regulation 28–19–51 is revoked. Revised regulations 28–19–16, 28–19–16a, 28–19–16b, 28–19–16c, 28–19–16f, 28–19–16g, 28–19–16h, and 28–19–16i, applicable to new sources in nonattainment areas were included with the June 15, 1982 submittal. Action is deferred on the following regulations: 28–19–16a(d), 28–19–16a(v), 28–19–16, 28–19–16b, 28–19–16c, 28–19–16f, 28–19–16h, 28–19–16i, and 28–19–16a(o). The remainder of the provisions are approved.

(16) New regulations K.A.R. 28–19–17 through K.A.R. 28–19–171 applicable to stationary sources subject to prevention of significant deterioration (PSD) permit requirements were submitted on May 5, 1983. Regulation K.A.R. 28–19–171 pertaining to the use of innovative control technology is not approved. By letter dated June 20, 1984, the State of Kansas agrees to follow the EPA interim stack height policy for each PSD permit issued until such time as EPA revises its general stack height regulations.

(17) Revised regulation K.A.R. 28–19–69, applicable to the use of cutback asphalt, was submitted by the Secretary of the Kansas Department of Health and Environment on February 21, 1986.

(i) Incorporation by reference.

(A) Revised regulation K.A.R. 28–19–69 as approved by the Kansas Attorney General on December 5, 1985.

(18) Revised regulations K.A.R. 28–19–63 applicable to automobile and light-duty truck surface coating; K.A.R. 28–19–64 applicable to bulk gasoline terminals; K.A.R. 28–19–67 applicable to petroleum refineries; and K.A.R. 28–19–68 applicable to leaks at petroleum refineries, were submitted by the Secretary of the Kansas Department of Health and Environment on February 21, 1986.

(i) Incorporation by reference. (A) Revised regulations K.A.R. 28–19–63, K.A.R. 28–19–64, K.A.R. 28–19–67, and K.A.R. 28–19–68 as approved by the Kansas Attorney General on October 30, 1985.

(19) Revised Kansas regulations pertaining to fees for permits to construct and operate were submitted by the Kansas Department of Health and Environment on March 27, 1986.

(i) Incorporation by reference.

(A) Kansas Administrative Regulations (KAR) 28–19–7, 28–19–8, 28–19–9, 28–19–14, 14(a) and 14(b), 28–19–31, 28–19–45, which became effective on May 1, 1986.

(B) Letter of March 27, 1986 to EPA from the State of Kansas Department of Health and Environment.

(C) Letter of September 15, 1987 to EPA from the State of Kansas Department of Health and Environment.

(20) Revisions to the ozone attainment plan for the Kansas City metropolitan area were submitted by the Governor on July 2, 1986. Pursuant to this plan, revised regulations for the control of volatile organic compound emissions were submitted by the Secretary of the Kansas Department of Health and Environment on January 6, 1988. In numerous instances, the revised Kansas regulations provide for departmental discretion to approve compliance plans and test methods which are alternatives to the EPA reference methods. EPA approves these regulations with the understanding that all such alternative compliance plans and test methods must be submitted to EPA, and approved, as individual SIP revisions. In the absence of such approval, the enforceable requirements of the SIP shall be the emission limits or reduction requirements stated in the regulations. Also, the Kansas regulations contain provisions whereby testing is required when the facility intends to demonstrate compliance by improved operations or new emission controls, yet no test procedures are specified. Examples of such provisions are transfer efficiency (TE) and vapor processing systems. Test methods

which are developed by the state must be approved by EPA before facilities may demonstrate compliance through alternative controls and/or TE.

(i) Incorporation by reference.

(A) Revised regulations K.A.R. 28–19–8, Reporting required; K.A.R. 28–19–61, Definitions; K.A.R. 28–19–62, Testing procedures; K.A.R. 28–19–63, Automobile and light-duty truck surface coating; K.A.R. 28–19–64, Bulk gasoline terminals; K.A.R. 28–19–65, VOC liquid storage in permanent fixed roof type tanks; K.A.R. 28–19–66, VOC liquid storage in external floating roof tanks; K.A.R. 28–19–69, Cutback asphalt; K.A.R. 28–19–70, Leaks from gasoline delivery vessels and vapor collection systems; K.A.R. 28–19–71, Printing operations; K.A.R. 28–19–72, Gasoline dispensing facilities; K.A.R. 28–19–73, Surface coating of miscellaneous metal parts and products and metal furniture; K.A.R. 28–19–74, Wool fiberglass manufacturing; and K.A.R. 28–19–75, Solvent metal cleaning. Temporary versions of these regulations are effective December 16, 1987, through April 30, 1988. The permanent regulations are effective May 1, 1988.

(B) Letter of January 6, 1988, from the Secretary of the Kansas Department of Health and Environment. This letter establishes the effective dates for the revised regulations referenced in subparagraph (20)(i)(A) above.

(ii) Additional material.

(A) State of Kansas Implementation Plan, Part A—Kansas City Metropolitan Area, Ozone, dated June 1986, submitted by the Governor on July 2, 1986. The plan contains an attainment demonstration, emissions inventories, and a control strategy.

(B) Supplemental information, pursuant to the above referenced plan, was submitted on August 19, 1987.

(C) Negative declarations for certain VOC source categories were submitted on April 16 and August 18, 1987.

(21) Revised Kansas regulations applicable to air quality models and definitions were submitted by the Kansas Department of Health and Environment on January 6, 1988.

(i) Incorporation by reference.

(A) Kansas Administrative Regulations (K.A.R.) 28–19–17(f) and 28–19–7 (a) through (f) and (h) through (w) which became effective December 16, 1987. EPA is deferring action on 28–19–7(g), *Emission Limitation and Standard*.

(22) On March 1, 1985, the Governor of Kansas submitted a revised carbon monoxide state implementation plan for Wichita, Kansas. On September 3, 1987, the Kansas Department of Health and Environment submitted two new transportation control measures as part of the revised Wichita carbon monoxide control plan.

(i) Incorporation by reference. (A) Letter of September 3, 1987, from the Kansas Department of Health and Environment and attached transportation control measures adopted August 18, 1987.

(B) Revision of the Wichita-Sedgwick County Portion of the Kansas State Implementation Plan for Carbon Monoxide submitted by the Governor on March 1, 1985. The plan contains an attainment demonstration, emissions inventory, and a control strategy.

(23) Kansas Administrative Regulations (K.A.R.) 28–19–19(a) through 28–19–19(o) pertaining to continuous emission monitoring at certain stationary sources were submitted on January 6, 1988, by the Kansas Department of Health and Environment. K.A.R. 28–19–19(o) allows for departmental discretion on use of different but equivalent procedures than those specified in 28–19–19(a) through 28–19–19(n). EPA approves this rule with the understanding that all such equivalent procedures and requirements must be submitted to EPA as individual SIP revisions. In the absence of such approval, the enforceable provisions of K.A.R. 28–19–19(a) through 28–19–19(n) shall be applicable.

(i) Incorporation by reference. (A) K.A.R. 28–19–19(a) through 28–19–19(o), continuous emission monitoring, as submitted by the Secretary of the Kansas Department of Health and Environment. These regulations became effective on May 1, 1988.

(B) Letter of January 6, 1988, from the Secretary of the Kansas Department of Health and Environment. This letter establishes the effective date for the revised regulations referenced in paragraph (23)(i)(A) of this section.

(24) Revised regulations K.A.R. 28–19–7(g), K.A.R. 28–19–16, and K.A.R. 28–19–17

pertaining to new source permit requirements, were submitted by the Secretary of the Kansas Department of Health and Environment on March 27, 1986. Revised regulation K.A.R. 28–19–18 pertaining to stack heights was submitted by the Secretary of the Kansas Department of Health and Environment on January 6, 1988.

(i) Incorporation by reference.

(A) Revised regulations, K.A.R. 28–19–16, 28–19–16b, 28–19–16d, 28–19–16g, 28–19–16i, 28–19–161, 28–19–17, 28–19–17a, and 28–19–17b, which became effective on May 1, 1986.

(B) Revised regulations K.A.R. 28–19–7(g), and K.A.R. 28–19–18 through 28–19–18f. The temporary regulations became effective December 16, 1987, and became permanently effective on May 1, 1988.

(ii) Additional material.

(A) KDHE letter of March 27, 1986, to EPA pertaining to new source permit regulations.

(B) KDHE letter of January 6, 1988, and June 9, 1988, to EPA pertaining to stack height regulations.

(C) KDHE letters of December 7, 1987, and December 23, 1987, pertaining to the state's stack heights analysis and negative declarations.

(25) Revised Kansas Administrative Regulations (K.A.R.) pertaining to PM_{10} regulations and the PM_{10} committal SIP were submitted by Kansas on October 5, 1989.

(i) Incorporation by reference. (A) Revised regulations Article 19—Ambient Air Quality Standards and Air Pollution Control, K.A.R. 28–19–7, 28–19–8, 28–19–14, 28–19–16a, 28–19–17a, 28–19–17b, 28–19–17c, 28–19–17g, 28–19–17i, 28–19–20, 28–19–21, and 28–19–56, published August 31, 1989, effective October 16, 1989.

(ii) Additional material. (A) Letter of October 5, 1989, from the Secretary of the Kansas Department of Health and Environment (KDHE).

(B) Memorandum of October 16, 1989, from the Secretary of State (Kansas) to Stanley Grant (KDHE).

(C) Revised Air Quality Surveillance Monitoring Plan—Section E.

(26) Revisions to the state implementation plan for the Kansas City metropolitan area were submitted by the Governor on October 23, 1991. Revisions include a maintenance plan which demonstrates continued attainment of the NAAQS for ozone through the year 2002. Rule revisions were also submitted on October 23, 1991.

(i) Incorporation by reference,

(A) Article 19—Ambient Air Quality Standards and Air Pollution Control, revised Kansas Administrative Regulations (K.A.R.) 28–19–61, Definitions, and K.A.R. 28–19–62, Testing procedures; and new rules K.A.R. 28–19–76, Lithography printing facilities, and K.A.R. 28–19–77, Chemical processing facilities that operate alcohol plants or liquid detergent plants. These rules were published August 22, 1991, and became effective October 7, 1991.

(ii) Additional material

(A) State of Kansas Implementation Plan, Kansas City Metropolitan Area Maintenance Provisions, October 1991.

(27) On September 15, 1992, the Secretary of KDHE submitted rule revisions to K.A.R. 28–19–17, the PSD rule; to K.A.R. 28–19–19, the CEM rule; and to K.A.R. 28–19–73, a surface coating rule. These rule revisions were adopted by KDHE on April 3, 1992.

(i) Incorporation by reference,

(A) Revised regulations K.A.R. 28–19–17 through 28–19–171, K.A.R. 28–19–19 and K.A.R. 28–19–73, and new regulations K.A.R. 28–19–17m through 28–19–17q, effective June 8, 1992.

(ii) Additional material.

(A) Letter and attachment from KDHE dated September 15, 1992 pertaining to PSD NO_x requirements.

(28) A plan for implementation of the Small Business Stationary Source Technical and Environmental Compliance Assistance Program was submitted by the Kansas Department of Health and Environment as a revision to the Kansas State Implementation Plan (SIP) on January 25, 1994.

(i) Incorporation by reference.

(A) Kansas SIP, Small Business Stationary Source Technical and Environmental Compliance Assistance Program, dated November 15, 1993.

(29) On May 16, 1994 the Secretary of KDHE submitted revisions to rules K.A.R. 28–19–31, 28–19–32, 28–19–63, and operating permits #20090048 (BPU Quindaro station) and #20090049 (BPU Kaw station).

(i) Incorporation by reference.

(A) Revised regulations K.A.R. 28–19–31, K.A.R. 28–19–32, K.A.R. 28–19–63, effective November 8, 1993.

(B) Operating permits; Kansas City, Kansas, Board of Public Utilities Quindaro permit #20090048, and Kaw permit #20090049, effective October 20, 1993.

(ii) Additional material.

(A) Letter from BPU to KDHE dated December 11, 1992, regarding compliance verification methods and schedules.

(30) On February 17, 1995, the Secretary of the Kansas Department of Health and Environment (KDHE) submitted for approval numerous rule revisions which add and revise definitions, revise the Kansas construction permit program, and create a class II operating permit program.

(i) Incorporation by reference.

(A) Revised rules K.A.R. 28–19–7 effective November 22, 1993; K.A.R. 28–19–8 effective January 23, 1995; K.A.R. 28–19–14 effective January 24, 1994; and the revocation of K.A.R. 28–19–14a effective January 23, 1995; and the revocation of K.A.R. 28–19–14b effective January 24, 1994.

(B) New rules K.A.R. 28–19–204, 212, 300, 301, 302, 303, 304, 400, 401, 402, 403, 404, 500, 501, 502, 540, 541, 542, 543, 544, 545, 546, 561, 562, and 563 effective January 23, 1995.

(31) On May 11, 1995, the Kansas Department of Health and Environment submitted an emissions inventory update to the Kansas City maintenance plan approved by EPA on June 23, 1992. The submittal also establishes a motor vehicle emissions budget for the purpose of fulfilling the requirements of the Federal Transportation Conformity rule.

(i) Incorporation by reference.

(A) Kansas City Ozone Maintenance State Implementation Plan Revision: Emissions Inventories and Motor Vehicle Emissions Budgets for the Kansas City Metropolitan Area, adopted on May 11, 1995.

(d) Plan revisions were submitted on April 17, 1974, and February 17, 1974.

[37 FR 10867, May 31, 1972]

EDITORIAL NOTE: For FEDERAL REGISTER citations affecting § 52.870, see the List of CFR Sections Affected in the Finding Aids sections of this volume.

§ 52.871 Classification of regions.

The Kansas plan was evaluated on the basis of the following classifications:

Air quality control region	Pollutant				
	Particulate matter	Sulfur oxides	Nitrogen dioxide	Carbon monoxide	Photochemical oxidants (hydrocarbons)
Metropolitan Kansas City Interstate	I	III	III	I	I
South Central Kansas Intrastate	I	III	III	III	I
Northeast Kansas Intrastate	I	III	III	III	III
Southeast Kansas Intrastate	III	III	III	III	III
North Central Kansas Intrastate	I	III	III	III	III
Northwest Kansas Intrastate	I	III	III	III	III
Southwest Kansas Intrastate	I	III	III	III	III

[37 FR 10867, May 31, 1972]

§ 52.872 Operating permits.

Emission limitations and related provisions which are established in Kansas operating permits as Federally enforceable conditions shall be enforceable by EPA. EPA reserves the right to deem permit conditions not Federally enforceable. Such a determination will be made according to appropriate procedures and be based upon the permit, permit approval procedures, or permit requirements which do not conform with the operating permit program requirements or the requirements of EPA underlying regulations.

[60 FR 36364, July 17, 1995]

§ 52.873 Approval status.

(a) The Kansas portion of the Kansas City metropolitan area was designated

as nonattainment for ozone in 40 CFR part 81. Therefore, the Administrator approves continuation of the 7.8 RVP limit as federally enforceable in the Kansas City metropolitan area, even after the area is redesignated to attainment, because of its nonattainment designation effective January 6, 1992. Also, the requirement for 7.8 psi RVP volatility is deemed necessary to ensure attainment and maintenance of the ozone standard as demonstrated by the emissions inventory projections (based on use of 7.8 psi RVP) in Kansas' ozone maintenance plan for the Kansas City metropolitan area.

(b)[Reserved]

(c) The Administrator approves Rule K.A.R. 28–19–31 as identified at §52.870(c)(29), with the understanding that any alternative compliance plans issued under this rule must be approved by EPA as individual SIP revisions.

[37 FR 10867, May 31, 1972, as amended at 46 FR 20170, Apr. 3, 1981; 46 FR 61118, Dec. 15, 1981; 57 FR 27939, June 23, 1992; 59 FR 52427, Oct. 18, 1994; 61 FR 16061, Apr. 11, 1996]

§52.874 Legal authority.

(a) The requirements of §51.230(f) of this chapter are not met since authority to make emission data available to the public is inadequate. Kansas Statutes Annotated 65–3015 would require confidential treatment if the data related to processes or production unique to the owner or would tend to affect adversely the competitive position of the owner.

(b) The requirements of §51.232(b) of this chapter are not met since the following deficiencies exist in the local agency legal authority:

(1) *Kansas City, Kans.-Wyandotte County Health Department.* (i) Authority to make emission data available to the public is inadequate because the Kansas Statutes Annotated 65–3016 provides a designated local air quality conservation authority with the same authority as the State (§51.230(f) of this chapter).

(2) *Topeka-Shawnee County Health Department.* (i) Authority to make emission data available to the public is inadequate because the Kansas Statutes Annotated 65–3016 provides a designated air quality conservation authority with the same authority as the State (§51.230(f) of this chapter).

(3) *Wichita-Sedgwick County Health Department.* (i) Authority to make emission data available to the public is inadequate because the Kansas Statutes Annotated 65–3016 provides a designated local air quality conservation authority with the same authority as the State (§51.230(f) of this chapter).

(c) The requirements of §51.230(d) of this chapter are not met since statutory authority to prevent construction, modification, or operation of a facility, building, structure, or installation, or combination thereof, which indirectly results or may result in emissions of any air pollutant at any location which will prevent the maintenance of a national air quality standard is not adequate.

[37 FR 10867, May 31, 1972, as amended at 39 FR 7281, Feb. 25, 1974; 51 FR 40676, Nov. 7, 1986]

§52.875 [Reserved]

§52.876 Compliance schedules.

(a) The requirements of §51.260 and of §51.15(a)(2) of this chapter as of September 19, 1976 (40 FR 43216), are not met since the plan does not contain legally enforceable compliance schedules setting forth the dates by which all stationary sources or categories of such sources must be in compliance with applicable portions of the control strategy. Paragraphs C and D of Kansas Regulation 28–19–9 specify that all sources not in compliance must submit an acceptable compliance schedule within 120 days after receiving notification from the State. There are no assurances that all sources will be notified by the State in a timely manner, therefore, paragraphs C and D of Regulation 28–19–9 are disapproved.

(b) *Federal compliance schedule.* (1) Except as provided in paragraph (2) of this paragraph (b), the owner or operator of any stationary source subject to any emission regulation which is part of the approved plan shall be in compliance on or before January 31, 1974.

(i) Any owner or operator in compliance with any such applicable regulation on the effective date of this paragraph shall certify such compliance to

the Administrator no later than December 31, 1972.

(ii) Any owner or operator who achieves compliance with any such applicable regulation after the effective date of this paragraph shall certify such compliance to the Administrator within 5 days of the date compliance is achieved.

(2) An owner or operator of a stationary source subject to any emission regulation approved by the Administrator may no later than December 31, 1972, submit to the Administrator for approval a proposed compliance schedule that demonstrates compliance with such regulation as expeditiously as practicable, but no later than July 31, 1975. The compliance schedule shall provide for periodic increments of progress toward compliance. The dates for achievement of such increments shall be specified. Increments of progress shall include, but not be limited to: Letting of necessary contracts for construction or process changes, if applicable; initiation of construction; completion and startup of control systems; performance tests; and submittal of performance test analysis and results.

(3) Any owner or operator who submits a compliance schedule pursuant to this paragraph shall, within 5 days after the deadline for each increment of progress, certify to the Administrator whether or not the required increment of the approved compliance schedule has been met.

(4) Any compliance schedule adopted by the State and approved by the Administrator shall satisfy the requirements of this paragraph for the affected source.

(c) *State compliance schedules.* (1) [Reserved]

(2) The compliance schedules identified below are disapproved as not meeting the requirements of § 51.102 or subpart N of this chapter. All regulations cited are air pollution control regulations of the state, unless otherwise noted.

KANSAS

Source	Location	Regulation involved	Date adopted
Chanute Manufacturing Co., Inc.: sand blasting	Chanute	28–19–50	Dec. 14, 1973.
Kansas City Power & Light, coal transfer houses	LaCygne	28–19–50	Nov. 22, 1974.
Pence Food Center, incinerator	Chanute	28–19–40	Do.
Rodney Milling Co.:			
"A" house gallery and tunnel system	Topeka	28–19–50	Do.
"B" & "C" house gallery	.....do	28–19–50	Do.
Western Alfalfa Corp., alfalfa dehydrator	Deerfield	28–19–20	Do.
Do	Tice	28–19–20	Do.
Pence Food Center, incinerator	Humboldt	28–19–40	Do.
Sherwin-Williams Chemicals, Ozark P.M. Mill	Coffeyville	28–19–50B	Oct. 8, 1974.
Continental Grain Co., rail car loading	Hutchinson	28–19–50	Aug. 15, 1974.
Far-Mar-Co, Inc., headhouse cyclones	Topeka	28–19–50	Sept. 5, 1974.
Do	Hutchinson	28–19–50	Aug. 15, 1974.
Western Iron & Foundry, cupola	Wichita	28–19–20A, 28–19–50A.	Oct. 4, 1974.
Kansas Army Ammunition Plant, open burning	Parsons	28–19–45	Jan. 24, 1975.
Reid Grain, headhouse	Goodland	28–19–50	Do.
Sherwin-Williams Chemicals, black ash kiln	Coffeyville	28–19–50A	Do.
Cooperative Farm Chemicals, No. 1 $NH_4NO_3$99-percent evaporator and prilling tower.	Lawrence	28–19–20	Mar. 28, 1975.
Sherwin-Williams Chemical Co., ozide calciner exhaust	Coffeyville	28–19–50A	Do.
Kaw Dehydrating Co., alfalfa dehydrator	Lawrence	28–19–20	Do.
Empire Dist. Electric Co.: Boilers Nos. 7 and 8	Riverton	28–19–31C	May 23, 1975.
Gulf Oil Chemicals Co.: Coal-fired boiler	Pittsburg	28–19–31	Do.
Kansas City Power & Light: Main boiler	La Cygne	28–19–31B	Do.
Mid-America Dairymen: Spray dryers Nos. 1 and 2	Sabetha	28–19–20	Do.
Tower Metal Products: Reverberatory furnace C	Fort Scott	28–19–50A	Do.
U.S. Steel—Universal Atlas Cement	Independence.		
Clay storage bin		28–19–50A	Do.
Stone storage bin		28–19–50A	Do.
Krupp Ball Mill No. 2		28–19–50A	Do.
Krupp Ball Mill No. 3		28–19–50A	Do.

[37 FR 19809, Sept. 22, 1972]

EDITORIAL NOTE: For FEDERAL REGISTER citations affecting § 52.876, see the List of CFR Sections Affected in the Finding Aids section of this volume.

§§52.877—52.880 [Reserved]

§52.881 PM_{10} State implementation plan development in group II areas.

The state has submitted a committal SIP for Kansas City, Kansas. The committal SIP contains all the requirements identified in the July 1, 1987, promulgation of the SIP requirements for PM_{10} at 52 FR 24681, except the state will report the PM_{10} data which exceed the standard within 60 days of the exceedance, rather than 45 days.

[55 FR 1423, Jan. 16, 1990]

§§52.882—52.883 [Reserved]

§52.884 Significant deterioration of air quality.

(a) The requirements of section 160 through 165 of the Clean Air Act, as amended are met; except that:

(1) EPA retains PSD permit authority for Indian lands in the State of Kansas.

[49 FR 48186, Dec. 11, 1984, as amended at 54 FR 15935, Apr. 20, 1989; 58 FR 3848, Jan. 12, 1993]

Subpart S—Kentucky

§52.920 Identification of plan.

(a) Title of plan: ''Implementation Plan for the Attainment and Maintenance of the National and State Ambient Air Quality Standards.''

(b) The plan was officially submitted on February 8, 1972, and was resubmitted on December 5, 1973.

(c) The plan revisions listed below were submitted on the dates specified.

(1) Clarifying comments on the plan submitted on March 6, 1972, by the Kentucky Air Pollution Control Office.

(2) Chapters IV and V, Control Strategies, and Chapter VII, Emission Control Regulations, submitted on March 17, 1972, by the Kentucky Air Pollution Control Office.

(3) Summary letter of Kentucky Air Pollution Control Commission and Regional Office meeting with attachments submitted May 3, 1972, by the Kentucky Air Pollution Control Office.

(4) Letter requesting delegation of authority and offering justification for a two-year extension for attainment of the sulfur dioxide primary standard submitted on June 7, 1972, by the Governor.

(5) Indirect source Regulation AP–11 and compliance schedules submitted on December 5, 1973, by the Governor.

(6) Compliance schedules submitted on February 15, 1974, by the Kentucky Department for Natural Resources and Environmental Protection.

(7) Compliance schedules submitted on April 23, 1974, by the Kentucky Department for Natural Resources and Environmental Protection.

(8) Clarifying comments submitted on May 21, 1974, by the Kentucky Department for Natural Resources and Environmental Protection.

(9) AQMA material submitted on January 6, 1975, by the Kentucky Department for Natural Resources and Environmental Protection.

(10) Revised body of air pollution control regulations and revised control strategies submitted respectively on August 29 and September 16, 1975, by the Kentucky Department for Natural Resources and Environmental Protection.

(11) Letters requesting delegation of Federal authority for the administrative and technical portions of the Prevention of Significant Deterioration program were submitted on May 5 and June 13, 1976 by the Secretary of the Department for Natural Resources and Environmental protection.

(12) 1979 revisions for Part D requirements for ozone nonattainment areas, submitted on June 29, 1979, by the Kentucky Department for Natural Resources and Environmental Protection.

(13) 1979 revisions for Part D requirements for sulfur dioxide nonattainment areas (Boyd, Jefferson, McCracken, Muhlenberg, and Webster Counties), submitted on June 29, 1979, by the Kentucky Department for Natural Resources and Environmental Protection.

(14) 1979 revisions for Part D requirements for total suspended particulate nonattainment areas (Bell, Boyd, Jefferson, McCracken and Muhlenberg counties, that portion of Bullit County in Shepherdsville, that portion of Campbell County in Newport, that portion of Daviess County in Owensboro, those portions of Henderson County in and around Henderson, that portion of

Lawrence County in Louisa, that portion of Madison County in Richmond, that portion of Perry County in Hazard, that portion of Pike County in Pikeville, and that portion of Whitley County in Corbin) submitted on June 29, 1979, by the Kentucky Department for Natural Resources and Environmental Protection.

(15) Revision to the State Implementation Plan for a bubble action at the Kentucky Utilities—Green River Station was submitted on December 1, 1980.

(16) Corrections in 1979 ozone revisions required by conditional approval of January 25, 1980, submitted on May 18, 1980 (letter on oil-water effluent separators), September 22, 1980 (Jefferson County I/M ordinance and schedule), November 19, 1980 (Jefferson County transportation related commitments), and on January 8, 1981 (changes in Jefferson County I/M schedule), by the Kentucky Department for Natural Resources and Environmental Protection.

(17) 1979 Revisions for Part D requirements for the Jefferson County carbon monoxide nonattainment area, submitted on June 29, 1979, by the Kentucky Department for Natural Resources and Environmental Protection. Additional materials to correct the deficiencies noted in the November 15, 1979 proposed conditional approval were submitted as SIP revisions on September 22, 1980, November 19, 1980, and January 8, 1981, as noted in the preceding paragraph.

(18) Air quality surveillance plan submitted on November 15, 1979, by the Kentucky Department for Natural Resources and Environmental Protection.

(19) Revision to the State Implementation Plan for a bubble action at Corning Glassworks, Danville, Kentucky was submitted on May 18, 1981, by the Kentucky Department for Natural Resources and Environmental Protection.

(20) Revision to the State Implementation Plan for a bubble action at National Distillers Company's Old Crow Plant in Woodford County, submitted on December 24, 1980, by the Kentucky Department for Natural Resources and Environmental Protection.

(21) Boone County Inspection/Maintenance ordinance and transportation control measures for Boone, Campbell, and Kenton Counties, submitted on November 19, 1980, by the Kentucky Department for Natural Resources and Environmental Protection.

(22) Set II VOC regulations, submitted on February 5, 1981, and September 24, 1982, by the Kentucky Department for Environmental Protection.

(23) Implementation plan for lead, submitted on May 7, 1980, by the Kentucky Department for Natural Resources and Environmental Protection.

(24) Provision for permit and exemption fees, submitted on June 10, 1981, by the Kentucky Department for Natural Resources and Environmental Protection.

(25) Provisions for public notifications and participation pursuant to section 127(a) of the Clean Air Act, submitted on April 8, 1980, by the Kentucky Department for Natural Resources and Environmental Protection.

(26) Revision to the State Implementation Plan for a bubble action at General Electric, Louisville, Kentucky, submitted on August 7, 1981, by the Kentucky Department for Natural Resources and Environmental Protection.

(27) Revised Boone County Inspection/Maintenance schedule submitted on October 9, 1981 by the Kentucky Department for Natural Resources and Environmental Protection.

(28) Addition to Appendix N of Jefferson County Regulation 6.28, Standard of Performance for Existing Hot Air Aluminium Atomization Processes, submitted on May 18, 1981, by the Kentucky Department for Natural Resources and Environmental Protection.

(29) Revision of Appendix N, Jefferson County Regulation 6.35, Standard of Performance for Existing Fabric, Vinyl and Paper Surface Coating Operations, submitted on November 17, 1981, by the Kentucky Department for Natural Resources and Environmental Protection.

(30) Jefferson County Set II VOC regulations for new/existing affected facilities, submitted on October 20, 1981, by the Kentucky Department for Natural Resources and Environmental Protection.

(31) Miscellaneous non-Part D revisions, submitted on June 29, 1979, by the Kentucky Department for Natural

Resources and Environmental Protection.

(32) Revision to the State Implementation Plan for a bubble action at Borden Chemical Co., Jefferson County, Kentucky, received by EPA from the Kentucky Department for Natural Resources and Environmental Protection on March 5, 1982.

(33) Addition of Kentucky Regulation 401 KAR 61:165, section 5, Particulate Standard for Existing Primary Aluminum Reduction Plants, submitted on March 4, 1982, by the Kentucky Department for Natural Resources and Environmental Protection.

(34) [Reserved]

(35) Corrections in 1979 Part D revisions for sulfur dioxide nonattainment area (Boyd County), submitted on September 24, 1982, by the Kentucky Natural Resources and Environmental Protection Cabinet.

(36) Variance for seven per- chloroethylene dry cleaners, submitted on August 4, 1982, by the Kentucky Department for Environmental Protection.

(37) Variances for two dry cleaners, submitted on January 27, 1983, by the Kentucky Department for Environmental Protection.

(38) Revised SO_2 limit for large coal-fired boilers in Pulaski County, submitted on June 29, 1979, by the Kentucky Department for Natural Resources and Environmental Protection.

(39)—(40) [Reserved]

(41) Revisions to Appendix N, submitted July 19, 1982 and March 21, 1983, by the Kentucky Department for Environmental Protection.

(42) Regulation 401 KAR 61:070, Existing Ferroally Production Facilities, for the Marshall County Part D TSP area, submitted on June 29, 1979, by the Kentucky Department for Environmental Protection.

(43) 1982 revisions to the Part D plan for the Jefferson County ozone and carbon monoxide nonattainment area, submitted by the Kentucky Natural Resources and Environmental Protection Cabinet on February 9, June 15, September 12, November 21, and December 9, 1983.

(44) Variances for two dry cleaners, Jiffy The Cleaners and Hiland Cleaners, submitted on April 25, 1984, by the Kentucky Natural Resources Environmental Protection Cabinet.

(45) Corrections in the Part D TSP SIP and other revisions submitted on December 9, 1982, and May 1, 1984, by the Kentucky Department for Environmental Protection.

(i) Incorporation by reference.

(A) Revisions in regulations 401 KAR—

50:010, Definitions and Abbreviations;
50:055, General Compliance Requirements;
61:005, General Provisions;
61:015, Existing Indirect Heat Exchangers;
61:075, Steel Plants and Foundries Using Existing Electric Arc Furnaces;
61:080, Steel Plants Using Existing Basic Oxygen Process Furnaces;
61:140, Existing By-Product Coke Manufacturing Plants; and
61:170, Existing Blast Furnace Casthouses.

The changes in these regulations were effective September 22, 1982 (50:055), December 1, 1982 (50:010, 61:005, 61:015, 61:075, and 61:140), and April 1, 1984 (61:080 and 61:170). No action is taken on the definition of ''volatile organic compounds''in 401 KAR 50:010.

(ii) Other material—none.

(46) Kentucky regulation 401 KAR 51:017, Prevention of significant deterioration of air quality, and Kentucky's State Implementation Plan Revision for the Protection of Visibility for the Commonwealth of Kentucky pursuant to 40 CFR part 51, subpart P, submitted on February 20, 1986, by the Kentucky Natural Resources and Environmental Protection Cabinet.

(i) Incorporation by reference. (A) Kentucky regulation 401 KAR 51:017, Prevention of significant deterioration of air quality, which became State-effective on February 4, 1986.

(ii) Other material. (A) Kentucky's State Implementation Revision for the Protection of Visibility for the Commonwealth of Kentucky, pursuant to 40 CFR part 51, subpart P, which became State-effective on February 4, 1986.

(47) Stack height regulations were submitted to EPA on July 15, 1986, by the Kentucky Natural Resources and Environmental Protection Cabinet.

(i) Incorporation by reference.

(A) Regulation 401 KAR 50:042, which became effective on June 10, 1986.

(ii) Other material—none.

(48) Revisions to the I/M portions of the carbon monoxide and ozone Part D

plans for Jefferson County, submitted by the Kentucky Natural Resources and Environmental Protection Cabinet on February 18, 1986.

(i) Incorporation by reference.

(A) A revised Regulation 8, Vehicle Exhaust Testing Requirements of the rules of the Air Pollution Control District of Jefferson County which was adopted on September 18, 1985.

(ii) Other materials—none.

(49) A revision to the Kentucky SIP for Tennessee Valley Authority Paradise Steam Plant pursuant to the procedures specified in Kentucky regulation 401 KAR 61:015, section 3 was submitted on June 29, 1987, by the Kentucky Natural Resources and Environmental Protection Cabinet. The revised SO_2 limits are contained in Permit Number 0–87–012, issued on June 29, 1987.

(i) Incorporation by reference.

(A) Permit Number 0–87–012, issued by the Kentucky Natural Resources and Protection Cabinet on June 29, 1987.

(ii) Other material.

(A) Letter of June 27, 1987 from the Kentucky Natural Resources and Environmental Protection Cabinet.

(50) A revision in Kentucky regulation 401 KAR 61:140, Existing by-product coke manufacturing plants, submitted on September 19, 1986, by the Kentucky Natural Resources and Environmental Protection Cabinet.

(i) Incorporation by reference.

(A) A revision to Division of Air Pollution regulation 401 Kentucky Administrative Regulations (KAR) 61:140, Existing by-product coke manufacturing plants, which became effective on September 4, 1986.

(B) Letter of September 19, 1986 from the Commonwealth of Kentucky to EPA.

(51) Revisions to the I/M portions of the carbon monoxide and ozone Part D plans for Jefferson County, submitted by the Kentucky Natural Resources and Environmental Protection Cabinet on March 20, 1987.

(i) Incorporation by reference.

(A) A revised Regulation 8, Vehicle Exhaust Testing Requirements; of the rules of the Air Pollution Control District of Jefferson County which was adopted on December 17, 1986.

(B) March 2, 1987 letter to EPA from Jefferson County.

(ii) Additional materials—none.

(52) Kentucky Plan for the ''Protection of Visibility in Class I Areas (PART II)'' submitted to EPA on August 31, 1987, by the Kentucky Department for Environmental Protection (KDEP) to satisfy the Part 2 visibility requirements.

(i) Incorporation by reference.

(A) June 8, 1988, letter from the Kentucky Natural Resources and Environmental Protection Cabinet, October 9, 1987, clarification letter from the Kentucky Natural Resources and Environmental Protection Cabinet, and page 8 of the Kentucky plan for the protection of visibility in Class I areas (PART II) containing the periodic review requirements satisfying 40 CFR 51.306(c), adopted on August 31, 1987.

(ii) Additional material.

(A) Narrative entitled ''The Kentucky Plan for the Protection of Visibility in Class I Areas (PART II).''

(53) Revisions to Kentucky regulation 401 KAR 50:015, Documents incorporated by reference, submitted by the Kentucky Natural Resources and Environmental Protection Cabinet on March 23, 1987.

(i) Incorporation by reference.

(A) Revisions to Kentucky regulation 401 KAR 50:015, Documents incorporated by reference which became State-effective on February 10, 1987.

(B) Letter of March 23, 1987, from the Kentucky Natural Resources and Environmental Protection Cabinet transmitting the foregoing revisions.

(ii) Additional material—none.

(54) An opacity variance for boiler Units 1 and 2 of Tennessee Valley Authority's (TVA's) Paradise Steam Plant, submitted on August 6, 1986, by the Kentucky Natural Resources and Environmental Protection Cabinet.

(i) Incorporation by reference.

(A) Permit No. 0–86–75, for the TVA Paradise Steam Plant, issued by the Kentucky Natural Resources and Environmental Protection Cabinet on July 24, 1986.

(B) Letter of August 6, 1986, from the Kentucky Natural Resources and Environmental Protection Cabinet.

(ii) Other material—none.

(55) Revisions to Jefferson County, Kentucky Regulation 2.08, Permit Fees and Renewal, submitted on March 20, 1987, by the Kentucky Natural Resources and Environmental Protection Cabinet.

(i) Incorporation by reference.

(A) Revisions to Jefferson County, Kentucky Regulation 2.08, Permit Fees and Renewal, which became State-effective on December 17, 1986.

(B) Letter of March 20, 1987, from the Kentucky Natural Resources and Environmental Protection Cabinet.

(ii) Other material—none.

(56) A revision to Kentucky Regulation 401 KAR 51:017, Prevention of Significant Deterioration of Air Quality, submitted on February 9, 1988, by the Kentucky Natural Resources and Environmental Protection Cabinet. The revision to section 12(1)(e) replaces the reference to Regulation 401 KAR 51:052 with a reference to 40 CFR part 51, Appendix S, section IV. This revision became State-effective on December 11, 1987.

(i) Incorporation by reference.

(A) Kentucky Regulation 401 KAR 51:017, Prevention of Significant Deterioration of Air Quality, section 12(1)(e), which became State-effective on December 11, 1987.

(ii) Other material.

(A) Letter of February 9, 1988, from the Kentucky Natural Resources and Environmental Protection Cabinet.

(57) Jefferson County Air Pollution Control District Regulation 6.38 was submitted to EPA on March 20, 1987 by the Kentucky Natural Resources and Environmental Protection Cabinet.

(i) Incorporation by reference.

(A) Jefferson County Air Pollution Control District Regulation 6.38, ''Standards of performance for existing air oxidation processes in the synthetic organic chemical manufacturing industry'', which became effective December 17, 1986.

(B) Letter of March 20, 1987, from the Kentucky Natural Resources and Environmental Protection Cabinet.

(ii) Other materials—none.

(58) Jefferson County Air Pollution Control District Regulation 6.39 was submitted to EPA on March 20, 1987, by the Kentucky Natural Resources and Environmental Protection Cabinet.

(i) Incorporation by reference.

(A) Jefferson County Air Pollution Control District Regulation 6.39, ''Standard of performance for equipment leaks of volatile organic compounds in existing synthetic organic chemical and polymer manufacturing plants'', which became effective December 17, 1986.

(B) March 20, 1987, letter from the Kentucky Natural Resources and Environmental Protection Cabinet.

(ii) Other materials—none.

(59) Revision to Jefferson County Regulations 3.05, Methods of Measurement submitted on January 19, 1989, by the Kentucky Natural Resources and Environmental Protection Cabinet.

(i) Incorporation by reference.

(A) Revisions to the Jefferson County Regulations, 3.05. Methods of Measurement.

This revision became State-effective April 20, 1988.

(ii) Other material.

(A) Letter of January 19, 1989, from the Kentucky Natural Resources and Environmental Protection Cabinet.

(60) Corrections in Part D TSP SIP and other revisions submitted on September 19, 1986, by the Kentucky Department for Environmental Protection. The removal of these last two conditions renders the Kentucky's Part D SIP for TSP fully approved.

(i) Incorporation by reference.

(A) Revisions in Regulation 401 KAR—

50:015. Documents Incorporated by Reference.

Section 1. Code of Federal Regulations,

Section 3. American Society for Testing and Materials,

Section 8. Kentucky Division of Air Pollution,

Section 10. American Public Health Association, and

Section 11. Availability.

59:010. New process operations.

Section 1. Applicability,

Section 2. Definitions,

Section 3. Standard for Particulate Matter, and

Section 4. Test Methods and Procedures.

61:020. Existing process operations.

Section 1. Applicability

Section 2. Definitions;

Section 3. Standard for Particulate Matter, and

Section 4. Test Methods and Procedures.

These changes were effective September 4, 1986.

(B) Letter of September 19, 1986, from the Kentucky Natural Resources and Environmental Protection Cabinet to EPA.

(ii) Other material—none.

(61) Revisions in Regulations 5.01, 6.12, 6.19, 6.22, 6.29, 6.30, 6.31, 6.32, 6.33, 6.34, and 6.35 of the Jefferson County portion of Kentucky's SIP were submitted on January 19, 1989, by Kentucky's Natural Resources Division and Environmental Protection Cabinet.

(i) Incorporation by reference.

(A) Amendments to the Jefferson County Regulations 5.01, 6.12, 6.19, 6.22, 6.29, 6.30, 6.31, 6.32, 6.33, 6.34, and 6.35 adopted on April 20, 1988.

(B) Letter of January 19, 1989, from Kentucky's Natural Resources and Environmental Protection Cabinet.

(ii) Other materials-none.

(62) Revision to Kentucky Regulation 401 KAR 50:015, Documents incorporated by reference submitted on February 9, 1989, by the Kentucky Natural Resources and Environmental Protection Cabinet. Section 5(1)(a) was amended to incorporate by reference Supplement A to the Guideline on Air Quality Models (Revised), July 1987. Supplement A became effective February 5, 1988. Section 12(4) was amended to reflect the current phone number for the Florence Regional Office. The revisions to 50:015 became state effective October 26, 1988.

(i) Incorporation by Reference.

(A) Kentucky Regulation 401 KAR 50:015, Documents incorporated by reference, Section 12(4) was amended on October 26, 1988.

(B) Supplement A to the Guideline on Air Quality Models EPA–450/2–78–027R that became effective February 5, 1988.

(ii) Other material.

(A) Letter of February 9, 1989, from the Kentucky Natural Resources and Environmental Protection Cabinet.

(63) Revisions to Kentucky Regulations 401 KAR 50:010, Definitions and abbreviations and 401 KAR 51:017, Prevention of Significant Deterioration of Air Quality, submitted on December 29, 1986, by the Kentucky Natural Resources and Environmental Protection Cabinet.

(i) Incorporation by reference. (A) Revisions in Kentucky Regulations are as follows. 401 KAR 50:010, Definitions and abbreviations section 1(49), and 401 KAR 51:017 Prevention of Significant Deterioration of Air Quality, Section 8(3). These revisions were state effective December 2, 1986.

(ii) Other material. (A) Letter of February 9, 1988, from the Kentucky Natural Resources and Environmental Protection Cabinet.

(64) Revisions to Jefferson County Regulation 4, Emergency Episode submitted on January 19, 1989 and July 12, 1989, by the Kentucky Natural Resources and Environmental Protection Cabinet.

(i) Incorporation by reference.

(A) Revisions to the following Jefferson County Regulation.

(1) Regulation 4, except Regulation 4.02, effective February 16, 1983.

(2) Regulation 4.02 Episode Criteria effective April 20, 1988.

(ii) Other material.

(A) Letters of January 19, 1989 and July 12, 1989, from the Kentucky Natural Resources and Environmental Protection Cabinet.

(65) Addition of Jefferson County Regulation 2.05, Prevention of Significant Deterioration of Air Quality, submitted on August 2, 1989, by the Kentucky Natural Resources and Environmental Protection Cabinet.

(i) Incorporation by reference.

(A) Jefferson County Regulation 2.05, Prevention of Significant Deterioration of Air Quality. This regulation became effective April 19, 1989.

(ii) Other material.

(A) August 2, 1989, letter from the Natural Resources and Environmental Protection Cabinet.

(66) On July 7, 1988, revisions to Kentucky's State Implementation Plan for PM_{10} were submitted by the Kentucky Natural Resources and Environmental Protection Cabinet. The submittal included a committal SIP. EPA is taking no action on 401 KAR 51:052, Review of new sources in or impacting upon nonattainment areas.

(i) Incorporation by reference.

(A) The following revisions to 401 KAR were effective April 14, 1988:

(*1*) 50:010. Definitions and abbreviations: Section 1. Definitions and section 2. Abbreviations.

(*2*) 50:015. Documents incorporated by reference: Sections 1, 3, and 11.

(*3*) 50:035. Permits.

(*4*) 51:010. Attainment status designations: Section 1(1) and Appendices A and B.

(*5*) 51:017. Prevention of significant deterioration of air quality: Section 8(4) (e) and (f), section 8(9), section 12(1) (f) and (g), and Appendices A, B, C, and D.

(*6*) 53:005. General provisions: Section 3(2).

(*7*) 53:010. Ambient air quality standards: Appendix A.

(*8*) 55:005. Significant harm criteria.

(*9*) 55:010. Episode criteria: Headings and Appendix A.

(*10*) 59:010. New process operations: Section 3(1) (b) and (c).

(*11*) 61:020. Existing process operations: Section 3(1)(b).

(*12*) 61:170. Existing blast furnace casthouses: Necessity and function paragraph and section 2(3).

(ii) Other material.

(A) Letter of December 7, 1987, from the Kentucky Natural Resources and Environmental Protection Cabinet.

(B) Letter of July 7, 1988, from the Kentucky Natural Resources and Environmental Protection Cabinet.

(C) Letter of January 23, 1989, from the Kentucky Natural Resources and Environmental Protection Cabinet.

(67) Operating permits for nine presses at the Alcan Foil Products facility located in Louisville were submitted to EPA on July 28, 1989 by the Commonwealth of Kentucky.

(i) Incorporation by reference. (A) Alcan Foil Products operating permit numbers 103–74, 104–74, 105–74, 106–74, 110–74, and 111–74 which became State-effective on February 28, 1990.

(ii) Other material.

(A) Letter of July 28, 1989, from the Commonwealth of Kentucky Natural Resources and Environmental Protection Cabinet.

(68) Revisions to the Commonwealth of Kentucky State Implementation Plan (SIP) concerning Jefferson County Volatile Organic Compounds were submitted on February 12, 1992 by the Kentucky Natural Resources and Environmental Protection Cabinet.

(i) Incorporation by reference.

(A) Revisions to the following Jefferson County Regulations were effective May 15, 1991.

(*1*) Regulation 1.02 Definitions: (45), (61), (62), and (91).

(*2*) Regulation 1.08 Administrative Procedures: Subsections 1.1.1, 1.1.3, 2.2.7, 2.3, and 2.5, Section 3.0 closing paragraph, and Subsections 4.6, 8.1 and 8.4.

(*3*) Regulation 6.12 Standard of Performance for Existing Asphalt Paving Operations: Sections 1.0 and 5.0.

(*4*) Regulation 6.13 Standard of Performance for Existing Storage Vessels for Volatile Organic Compounds.

(*5*) Regulation 6.16 Standard of Performance for Existing Large Appliance Surface Coating Operations.

(*6*) Regulation 6.18 Standards of Performance for Existing Solvent Metal Cleaning Equipment.

(*7*) Regulation 6.19 Standard of Performance for Existing Metal Furniture Surface Coating Operations.

(*8*) Regulation 6.23 Standard of Performance for Existing Dry Cleaning Facilities: Section 1.0 and Subsection 4.3.

(*9*) Regulation 6.29 Standard of Performance for Existing Graphic Arts Facilities Using Rotogravure and Flexography.

(*10*) Regulation 6.30 Standard of Performance for Existing Factory Surface Coating Operations of Flat Wood Paneling.

(*11*) Regulation 6.31 Standard of Performance for Existing Miscellaneous Metal Parts and Products Surface Coating Operations.

(*12*) Regulation 6.32 Standard of Performance for Leaks from Existing Petroleum Refinery Equipment.

(*13*) Regulation 6.33 Standard of Performance for Existing Synthesized Pharmaceutical Product Manufacturing Operations.

(*14*) Regulation 6.34 Standard of Performance for Existing Pneumatic Rubber Tire Manufacturing Plants.

(*15*) Regulation 6.35 Standard of Performance for Existing Fabric, Vinyl and Paper Surface Coating Operations.

(*16*) Regulation 7.11 Standard of Performance for New Asphalt Paving Operations: Sections 1.0, 6.0, and 7.0.

(*17*) Regulation 7.12 Standard of Performance for New Storage Vessels for Volatile Organic Compounds: Section 1.0, Subsections 2.10, 5.3.2, 5.3.3, and 5.4, and Section 8.0.

(*18*) Regulation 7.16 Standard of Performance for New Large Appliance Surface Coating Operations: Section 1.0, Subsections 2.3, 4.2, 4.4, 5.3 and 5.4, and Sections 6.0 and 7.0.

(*19*) Regulation 7.18 Standards of Performance for New Solvent Metal Cleaning Equipment: Section 1.0 and Subsection 2.4.

(*20*) Regulation 7.19 Standard of Performance for New Metal Furniture Surface Coating Operations: Section 1.0, Subsections 2.3, 4.3, 4.5.1, 5.2, and Sections 6.0 and 7.0.

(*21*) Regulation 7.23 Standard of Performance for New Perchloroethylene Dry Cleaning Facilities: Section 1.0 and Subsection 4.5.

(*22*) Regulation 7.52 Standard of Performance for New Fabric, Vinyl, and Paper Surface Coating Operations: Section 1.0, Subsections 2.3, 2.12, 4.1, 4.3, 4.5.1, and 5.3, and Section 6.0.

(*23*) Regulation 7.56 Standard of Performance for Leaks from New Petroleum Refinery Equipment: Subsection 2.4 and 2.6, and Section 7.0.

(*24*) Regulation 7.57 Standard of Performance for New Graphic Arts Facilities Using Rotogravure and Flexography: Section 1.0, Subsections 2.8, 4.2, 4.4.1, and 5.2, and Sections 6.0, 7.0, and 8.0.

(*25*) Regulation 7.58 Standard of Performance for New Factory Surface Coating Operations of Flat Wood Paneling: Section 1.0, Subsection 2.5, 4.4.1, and 5.4, and Section 6.0.

(*26*) Regulation 7.59 Standard of Performance for New Miscellaneous Metal Parts and Products Surface Coating Operations: Section 1.0, Subsections 2.2, 2.4, 2.5, 2.8.7, 4.3, 4.5.1, 5.1.1, 5.1.2, 5.1.4, 5.2, and 5.4, and Sections 6.0 and 7.0.

(*27*) Regulation 7.60 Standard of Performance for New Synthesized Pharmaceutical Product Manufacturing Operations: Section 1.0 and Section 2.0.

(*28*) Regulation 7.61 Standard of Performance for New Pneumatic Rubber Tire Manufacturing Plants: Section 1.0, Subsections 2.2, 2.3, 2.4, 2.5, 2.6, and 2.7, and Section 3.0.

(ii) Other material.

(A) Letter dated February 12, 1992, from the Commonwealth of Kentucky Natural Resources and Environmental Protection Cabinet.

(69) Revisions to the Commonwealth of Kentucky State Implementation Plan (SIP) concerning the Commonwealth and Jefferson County, Kentucky for Volatile Organic Compounds were submitted on October 20, 1992, February 17, 1993, and March 4, 1993, by the Kentucky Natural Resources and Environmental Protection Cabinet.

(i) Incorporation by reference.

(A) Revisions to the following Jefferson County Regulations were effective November 18, 1992.

(*1*) Regulation 1.05. Compliance with Emission Standards and Maintenance Requirements.

(*2*) Regulation 1.06. Source Self-Monitoring and Reporting.

(*3*) Regulation 6.17. Standard of Performance for Existing Automobile and Truck Surface Coating Operations.

(*4*) Regulation 6.36. Standard of Performance for Existing Metal Parts and Products Surface Coating Operations at Heavy Duty Truck Manufacturing Plants.

(B) Revisions to the following Commonwealth of Kentucky Regulations were effective June 24, 1992.

(*1*) Regulation 401 KAR 50:010. Definitions and abbreviations of terms used in Title 401, Chapters 50, 51, 53, 55, 57, 59, 61, 63, and 65.

(*2*) Regulation 401 KAR 50:012. General application.

(*3*) Regulation 401 KAR 50:047. Test procedures for capture efficiency.

(*4*) Regulation 401 KAR 51:001. Definitions and abbreviations of terms used in Title 401, Chapter 51.

(*5*) Regulation 401 KAR 59:001. Definitions and abbreviations of terms used in Title 401, Chapter 59.

(*6*) Regulation 401 KAR 59:185. New solvent metal cleaning equipment.

(*7*) Regulation 401 KAR 59:190. New insulation of magnet wire operations.

(*8*) Regulation 401 KAR 59:210. New fabric, vinyl and paper surface coating operations.

(*9*) Regulation 401 KAR 59:212. New graphic arts facilities using rotogravure and flexography.

(*10*) Regulation 401 KAR 59:214. New factory surface coating operations of flat wood paneling.

(*11*) Regulation 401 KAR 59:225. New miscellaneous metal parts and products surface coating operations.

(*12*) Regulation 401 KAR 59:230. New synthesized pharmaceutical product manufacturing operations.

(*13*) Regulation 401 KAR 59:240. New perchloroethylene dry cleaning systems.

(*14*) Regulation 401 KAR 61:001. Definitions and abbreviations of terms used in Title 401, Chapter 61.

(*15*) Regulation 401 KAR 61:050. Existing storage vessels for petroleum liquids.

(*16*) Regulation 401 KAR 61:090. Existing automobile and light-duty truck surface coating operations.

(*17*) Regulation 401 KAR 61:095. Existing solvent metal cleaning equipment.

(*18*) Regulation 401 KAR 61:100. Existing insulation of magnet wire operations.

(*19*) Regulation 401 KAR 61:105. Existing metal furniture surface coating operations.

(*20*) Regulation 401 KAR 61:110. Existing large appliance surface coating operations.

(*21*) Regulation 401 KAR 61:120. Existing fabric, vinyl and paper surface coating operations.

(*22*) Regulation 401 KAR 61:124. Existing factory surface coating operations of flat wood paneling.

(*23*) Regulation 401 KAR 61:125. Existing can surface coating operations.

(*24*) Regulation 401 KAR 61:130. Existing coil surface coating operations.

(*25*) Regulation 401 KAR 61:132. Existing miscellaneous metal parts and products surface coating operations.

(*26*) Regulation 401 KAR 61:137. Leaks from existing petroleum refinery equipment.

(*27*) Regulation 401 KAR 61:150. Existing synthesized pharmaceutical product manufacturing operations.

(*28*) Regulation 401 KAR 61:155. Existing pneumatic rubber tire manufacturing plants.

(*29*) Regulation 401 KAR 61:160. Existing perchloroethylene dry cleaning systems.

(*30*) Regulation 401 KAR 61:175. Leaks from existing synthetic organic chemical and polymer manufacturing equipment.

(*31*) Regulation 401 KAR 63:001. Definitions and abbreviations of terms used in Title 401, Chapter 63.

(*32*) Regulation 401 KAR 63:025. Asphalt paving operations.

(C) Kentucky Regulation 401 KAR 59:315, Specific New Sources, effective June 24, 1992.

(D) Revisions to following Kentucky Regulations were effective February 8, 1993.

(*1*) Regulation 401 KAR 51:010. Attainment Status Designations.

(*2*) Regulation 401 KAR 59:175. New service stations.

(*3*) Regulation 401 KAR 61:085. Existing service stations.

(*4*) Regulation 401 KAR 63:031. Leaks from Gasoline Tanks.

(ii) Other material. None.

(70) The maintenance plan for the Owensboro and Edmonson County Areas which include Daviess, a portion of Hancock, and Edmonson Counties submitted by the Commonwealth of Kentucky Natural Resources and Environmental Protection Cabinet on November 13, 1992, November 24, 1992, March 10, 1993, July 16, 1993, March 3, 1994, and August 29, 1994, as part of the Kentucky SIP. The 1990 Baseline Emission Inventory for the Owensboro and Edmonson County areas which include Daviess, a portion of Hancock, and Edmonson Counties.

(i) Incorporation by reference.

(A) Commonwealth of Kentucky Attainment Demonstration and Ten Year Maintenance Plan for All Areas Designated Marginal Nonattainment for Ozone. The effective date is December 28, 1992.

(B) Attachment A—Demonstration of Permanent and Enforceable Reductions and Calculations of Interim Year Emission Projections. The effective date is August 26, 1994.

(C) Attachment B—VOC Emissions Summary for Kentucky's Marginal Ozone Nonattainment Areas. The effective date is August 26, 1994.

(D) Attachment C—CO Emissions Summary for Kentucky's Marginal Ozone Nonattainment Areas. The effective date is August 26, 1994.

(E) Attachment D—NO_X Emissions Summary for Kentucky's Marginal

Ozone Nonattainment Areas. The effective date is August 26, 1994.

(F) Table 6–12 Biogenic Emissions Hancock County, Kentucky. The effective date is December 28, 1992.

(G) Table 6–11 Biogenic Emissions Daviess County, Kentucky. The effective date is December 28, 1992.

(H) Table 6–1. Biogenic Emissions Edmonson County, Kentucky. The effective date is December 28, 1992.

(ii) Other material.

(A) February 28, 1994, letter from John E. Hornback, Director, Division for Air Quality to Mr. Doug Neeley, Chief, Air Programs Branch.

(B) October 4, 1994, letter from Phillip J. Shepherd, Secretary, Natural Resources and Environmental Protection Cabinet to John H. Hankinson, Regional Administrator, USEPA Region IV.

(71) The Commonwealth of Kentucky, Natural Resources and Environmental Protection Cabinet submitted revisions to the Kentucky State Implementation Plan on January 15, 1993 These revisions address the requirements of section 507 of title V of the CAA and establish the Small Business Stationary Source Technical and Environmental Assistance Program (PROGRAM).

(i) Incorporation by reference.

(A) Revision to the Kentucky State Implementation Plan to incorporate document titled ''Kentucky Small Business Stationary Source Technical Environmental Assistance Program'' which was approved by the Kentucky Natural Resources and Environmental Protection Cabinet effective on July 15, 1993.

(ii) Additional Material. None.

(72) Modifications to the existing basic I/M program in Jefferson County to implement an anti-tampering check, pressure testing of the evaporative control system, and testing of commuter vehicles submitted by the Commonwealth of Kentucky on November 12, 1993.

(i) Incorporation by reference. Regulation 8.01 and 8.02, adopted on February 17, 1993, and Regulation 8.03 adopted on February 17, 1993.

(ii) Other material. None.

(73) The maintenance plan for the Paducah area which include Livingston and Marshall Counties submitted by the Commonwealth of Kentucky Natural Resources and Environmental Protection Cabinet on November 13, 1992, November 24, 1992, March 10, 1993, July 16, 1993, March 3, 1994, and August 29, 1994, as part of the Kentucky SIP. The 1990 Baseline Emission Inventory for the Paducah area which include Livingston and Marshall Counties.

(i) Incorporation by reference.

(A) Commonwealth of Kentucky Attainment Demonstration and Ten Year Maintenance Plan for all areas designated Marginal Nonattainment for Ozone. The effective date is January 15, 1993.

(B) Table 6–13 Biogenic Emissions, Livingston County, Kentucky. The effective date is January 15, 1993.

(C) Table 6–14 Biogenic Emissions, Marshall County, Kentucky. The effective date is January 15, 1993.

(ii) Other material.

(A) January 15, 1993, letter from Phillip J. Shepherd, Secretary, Natural Resources and Environmental Protection Cabinet to Patrick Tobin, Acting Regional Administrator, U.S. EPA Region IV.

(B) February 28, 1994, letter from John E. Hornback, Director, Division for Air Quality to Mr. Doug Neeley, Chief, Air Programs Branch.

(C) October 4, 1994, letter from Phillip J. Shepherd, Secretary, Natural Resources and Environmental Protection Cabinet to John H. Hankinson, Regional Administrator, U.S. EPA Region IV.

(74)–(75) [Reserved]

(76) The maintenance plan and for the Lexington area which include Fayette and Scott Counties submitted by the Commonwealth of Kentucky Natural Resources and Environmental Protection Cabinet on November 13, 1992, November 24, 1992, March 10, 1993, July 16, 1993, March 3, 1994, and August 29, 1994, September 28, 1994 and June 14, 1995, as part of the Kentucky SIP. The 1990 Baseline Emission Inventory for the Lexington area which include Fayette and Scott Counties.

(i) Incorporation by reference.

(A) Commonwealth of Kentucky Attainment Demonstration and Ten Year Maintenance Plan for all areas designated Marginal Nonattainment for

Ozone. The effective date is January 15, 1993.

(B) Table 6–6 Biogenic Emissions Fayette County, Kentucky. The effective date is January 15, 1993.

(C) Table 6–7 Biogenic Emissions, Scott, Kentucky. The effective date is January 15, 1993.

(ii) Other material.

(A) February 28, 1994, letter from John E. Hornback, Director, Division for Air Quality to Mr. Doug Neeley, Chief, Air Programs Branch.

(B) October 4, 1994, letter from Phillip J. Shepherd, Secretary, Natural Resources and Environmental Protection Cabinet to John H. Hankinson, Regional Administrator, U.S. EPA Region 4.

(C) January 15, 1993, letter from Phillip J. Shepherd, Secretary, Natural Resources and Environmental Protection Cabinet to Patrick M. Tobin, Acting Regional Administrator, U.S. EPA Region 4.

(77) Revisions to the Commonwealth of Kentucky State Implementation Plan (SIP) concerning emission statements were submitted on December 29, 1994, by the Kentucky Natural Resources and Environmental Protection Cabinet.

(i) Incorporation by reference.

(A) Regulation 401 KAR 50:035 Permits. Section 1, Section 2(1) and Section 10. Regulation became effective September 28, 1994.

(ii) None.

(78) Operating Permit requiring VOC RACT for Calgon Corporation in the Kentucky portion of the Ashland/Huntington ozone nonattainment area, submitted November 11, 1994.

(i) Incorporation by reference. Natural Resources and Environmental Protection Cabinet; Kentucky Department for Environmental Protection; Division for Air Quality; Permit 0–94–020; Calgon Carbon Corporation, effective on November 17, 1994.

(ii) Other material. Letter of November 23, 1994, from the Commonwealth of Kentucky Natural Resources and Environmental Protection Cabinet.

(79) Revisions to the Commonwealth of Kentucky State Implementation Plan (SIP) regarding the definition of volatile organic compound (VOC) submitted on January 27, 1995.

(i) Incorporation by reference.

(A) 401 KAR 50:010. Definitions and abbreviations of terms used in 401 KAR Chapters 50, 51, 53, 55, 57, 59, 61, 63, and 65, effective April 6, 1995.

(B) 401 KAR 51:001. Definitions and abbreviations of terms used in 401 KAR Chapter 51, effective April 6, 1995.

(C) 401 KAR 59:001. Definitions and abbreviations of terms used in 401 KAR Chapter 59, effective April 6, 1995.

(D) 401 KAR 61:001. Definitions and abbreviations of terms used in 401 KAR Chapter 61, effective April 6, 1995.

(E) 401 KAR 63:001. Definitions and abbreviations of terms used in 401 KAR Chapter 63, effective April 6, 1995.

(F) 401 KAR 65:001. Definitions and abbreviations of terms used in 401 KAR Chapter 65, effective April 6, 1995.

(ii) Other material.

(A) May 4, 1995, letter from Phillip J. Shepherd, Secretary, Natural Resources and Environmental Protection Cabinet to John H. Hankinson, Regional Administrator, U.S. EPA, Region IV.

(80) The maintenance plan for the Ashland-Huntington area which includes Boyd and a portion of Greenup Counties was submitted by the Commonwealth of Kentucky Natural Resources and Environmental Protection Cabinet on November 13 and May 24, 1995, as part of the Kentucky SIP. The 1990 Baseline Emission Inventory for the Ashland-Huntington area which includes Boyd and a portion of Greenup Counties which was submitted on November 13, 1992.

(i) Incorporation by reference.

(A) Kentucky Natural Resources and Environmental Protection Cabinet Request to Redesignate the Huntington/Ashland Moderate Ozone Nonattainment Area, Maintenance Plan, effective May 24, 1995.

(B) Appendix F Kentucky Projected Emissions Summary: VOC, CO, and NO_x, effective May 24, 1995.

(C) Table 6–1 Summary of Biogenic Emissions Huntington-Ashland MSA, effective May 24, 1995.

(ii) Other material.

(A) May 24, 1995, letter from Phillip J. Shepherd, Secretary, Natural Resources and Environmental Protection

Cabinet to John H. Hankinson, Regional Administrator, USEPA Region 4.

(81) Revisions to air permit rules submitted by the Kentucky Natural Resources and Environmental Protection Cabinet on December 29, 1994.

(i) Incorporation by reference. Revised Rule 401 KAR 50:035, ''Permits'', Sections 1 through 7, effective September 28, 1994.

(ii) Other material. None.

(82) Revision to the Kentucky State Implementation Plan; Regulation 6.40 of the Air Pollution Control District of Jefferson County which was submitted to EPA on March 4, 1993.

(i) Incorporation by reference.

Regulation 6.40 Standards of Performance for Gasoline Transfer to Motor Vehicles (Stage II Vapor Recovery and Control) which were adopted on December 16, 1992.

(ii) Other material. None.

(83) Revisions to the Kentucky State Implementation Plan submitted by the Natural Resources and Environmental Protection Cabinet on June 15, 1983.

(i) Incorporation by reference.

401 KAR 50:025 Classification of Counties, and 401 KAR 61:015 Existing Indirect Heat Exchangers, effective June 1, 1983.

(ii) Additional material. None.

(84) Revisions to the Kentucky State Implementation Plan submitted by the Natural Resources and Environmental Protection Cabinet on December 29, 1994. The regulations being revised are 401 KAR 59:101 New Bulk Gasoline Plants and 401 KAR 61:056 Existing Bulk Gasoline Plants.

(i) Incorporation by reference. Division for Air Quality regulations 401 KAR 59:101 New bulk gasoline plants, and 401 KAR 61:056 Existing bulk gasoline plants, effective September 28, 1994.

(ii) Additional material. None.

[37 FR 10868, Mar. 31, 1972]

EDITORIAL NOTE: For FEDERAL REGISTER citations affecting § 52.920, see the List of CFR Sections Affected in the Finding Aids section of this volume.

EFFECTIVE DATE NOTE: At 61 FR 33676, June 28, 1996, § 52.920 was amended by adding paragraph (c)(84), effective Aug. 27, 1996.

§ 52.921 Classification of regions.

The Kentucky plan was evaluated on the basis of the following classifications:

Air quality control region	Pollutant				
	Particulate matter	Sulfur oxides	Nitrogen dioxide	Carbon monoxide	Photochemical oxidants (hydrocarbons)
Appalachian Intrastate	II	III	III	III	III
Bluegrass Intrastate	II	III	III	III	III
Evansville (Indiana)-Owensboro-Henderson (Kentucky) Interstate	I	II	III	III	III
Huntington (West Virginia)-Ashland (Kentucky)-Portsmouth-Ironton (Ohio) Interstate	I	III	III	III	III
Louisville Interstate	I	I	III	III	I
Metropolitan Cincinnati Interstate	I	II	III	III	I
North Central Kentucky Intrastate	II	III	III	III	III
Paducah (Kentucky)-Cairo (Illinois) Interstate	I	II	III	III	III
South Central Kentucky Intrastate	III	III	III	III	III

[37 FR 10868, May 31, 1972, as amended at 39 FR 16346, May 8, 1974]

§ 52.922 [Reserved]

§ 52.923 Approval status.

(a) With the exceptions set forth in this subpart, the Administrator approves Kentucky's plans for the attainment and maintenance of the national standards under section 110 of the Clean Air Act. Furthermore, the Administrator finds the plans satisfy all requirements of Part D, Title I, of the Clean Air Act as amended in 1977, except as noted below. In addition, continued satisfaction of the requirements of Part D for the ozone portion of the SIP depends on the adoption and submittal of RACT requirements by July 1, 1980 for the sources covered by CTGs

issued between January 1978 and January 1979 and adoption and submittal by each subsequent January of additional RACT requirements for sources covered by CTGs issued by the previous January.

(b) New Source review permits issued pursuant to Section 173 of the Clean Air Act will not be deemed valid by EPA unless the provisions of Section V of Appendix S of 40 CFR part 51 are met.

[45 FR 72157, Oct. 31, 1980]

§52.924 Legal authority.

(a) The requirements of §51.230(f) of this chapter are not met since K.R.S. 224.380 of the Air Pollution Control Law of the Commonwealth of Kentucky (June 18, 1970) does not provide for the release, under certain circumstances, of emission data to the public.

(b) Delegation of Authority: Pursuant to section 114 of the Act, Kentucky requested a delegation of authority to enable it to collect, correlate, and release emission data to the public. The Administrator has determined that Kentucky is qualified to receive a delegation of the authority it requested. Accordingly, the Administrator delegates to Kentucky his authority under section 114(a) (1) and (2) and section 114(c) of the Act, i.e., authority to collect, correlate, and release emission data to the public.

[37 FR 10868, May 31, 1972, as amended at 37 FR 15084, July 27, 1972; 51 FR 40676, Nov. 7, 1986]

§52.925 General requirements.

(a) The requirements of §51.116(c) of this chapter are not met since the legal authority to provide for public availability of emission data is inadequate.

[39 FR 34536, Sept. 26, 1974, as amended at 51 FR 40676, Nov. 7, 1986]

§52.926 Attainment dates for national standards.

The following table presents the latest dates by which the national standards are to be attained. The dates reflect the information presented in Kentucky's plan, except where noted.

Air quality control region	Pollutant						
	Particulate matter		Sulfur oxides		Nitrogen dioxide	Carbon monoxide	Ozone
	Primary	Secondary	Primary	Secondary			
Appalachian Intrastate:							
a. Bell County	g	h	b	b	b	b	b
b. Perry County	g	h	b	b	b	b	b
c. Whitley County	g	h	b	b	b	b	b
d. Rest of AQCR	c	*c*	b	b	b	b	b
Bluegrass Intrastate:							
a. Fayette County	a	*c*	b	b	b	b	*g*
b. Madison County	g	h	b	b	b	b	b
c. Rest of AQCR	a	*c*	b	b	b	b	b
Evansville (Indiana)-Ownsboro-Henderson (Kentucky) Interstate:							
a. Daviess County	g	i	g	g	b	b	b
b. Henderson County	g	i	a	e	b	b	*g*
c. Webster County	c	*c*	g	g	b	b	b
d. Rest of AQCR	c	*c*	a	e	b	b	b
Huntington (West Virginia)-Ashland (Kentucky)-Portsmouth-Ironton (Ohio) Interstate:							
a. Boyd County	g	i	g	b	b	b	*g*
b. Lawrence County	g	h	b	b	b	b	b
c. Rest of AQCR	c	*c*	b	b	b	b	b
Louisville Interstate	g	i	j	j	b	h	h
Metropolitan Cincinnati Interstate:							
a. Boone County	c	*c*	a	d	b	*d*	h
b. Campbell County	g	h	a	d	b	*d*	h
c. Kenton County	c	*c*	a	d	b	*d*	h
d. Rest of AQCR	c	*c*	a	*d*	b	*d*	c
North Central Kentucky Intrastate:							
a. Bullitt County	g	h	b	b	b	b	b
b. Rest of AQCR	a	*c*	b	b	b	b	b

Air quality control region	Pollutant						
	Particulate matter		Sulfur oxides		Nitrogen dioxide	Carbon monoxide	Ozone
	Primary	Secondary	Primary	Secondary			
Paducah (Kentucky) Cairo (Illinois) Interstate:							
a. McCracken County	g	h	g	f	b	b	b
b. Marshall County	c	g	a	f	b	b	b
c. Muhlenberg County	g	h	g	g	b	b	b
d. Rest of AQCR	c	*c*	a	f	b	b	b
South Central Kentucky Intrastate	b	b	b	b	b	b	b

See § 81.318 of this chapter to identify the specific nonattainment area.

NOTE: Dates or footnotes in italics are prescribed by the Administrator because the plan did not provide a specific date or the dates provided were not acceptable. Sources subject to plan requirements and attainment dates established under section 110(a)(2)(A) prior to the 1977 Clean Air Act Amendments remain obligated to comply with those requirements by the earlier deadlines. The earlier attainment dates are set out at 40 CFR 52.926 (1979 edition).

a. Air quality levels presently below primary standards or area is unclassifiable.
b. Air quality levels presently below secondary standards or area is unclassifiable.
c. April 1975.
d. July 1975.
e. July 1977.
f. July 1978.
g. December 31, 1982.
h. December 31, 1987.
i. 18 month extension for plan submittal granted: attainment date not yet established.
j. January 1, 1985.

[45 FR 85002, Dec. 24, 1980]

§ 52.927 Compliance schedules.

(a) The requirements of § 51.262(a) of this chapter are not met since compliance schedules with adequate increments of progress have not been submitted for every source for which they are required.

(b) Federal compliance schedules.

(1) Except as provided in paragraph (b)(5) of this section, the owner or operator of any fuel-burning facility subject to the requirements of the Kentucky Air Pollution Control Regulations as they apply to sulfur dioxide sources, shall notify the Regional Administrator, by no later than November 3, 1975, of his intent to utilize either low-sulfur fuel or stack gas desulfurization to meet these requirements.

(2) Any owner or operator of a stationary source subject to paragraph (b)(1) of this section who elects to utilize low-sulfur fuel shall be subject to the following compliance schedule:

(i) December 1, 1975—Submit to the Regional Administrator a projection of the amount of fuel, by types, that will be substantially adequate to enable compliance with the applicable regulation on July 1, 1977, and for at least one year thereafter, as well as a statement as to whether boiler modifications will be required. If so, final plans for such modifications must be submitted simultaneously.

(ii) December 31, 1975—Sign contracts with fuel suppliers for projected fuel requirements as projected above.

(iii) December 31, 1975—Let contracts for necessary boiler modifications, if applicable.

(iv) January 30, 1976—Initiate onsite modifications, if applicable.

(v) May 1, 1977—Complete onsite modifications, if applicable.

(vi) July 1, 1977—Achieve compliance with the applicable regulations, and certify such compliance to the Regional Administrator.

(3) Any owner or operator subject to paragraph (b)(1) of this section who elects to utilize stack gas desulfurization shall be subject to the following compliance schedule:

(i) December 1, 1975—Submit to the Regional Administrator a final control plan, which describes at a minimum the steps which will be taken by the source to achieve compliance with the applicable regulations.

(ii) December 31, 1975—Negotiate and sign all necessary contracts for emission control systems or process modifications, or issue orders for the purchase of component parts to accomplish emission control or process modifications.

(iii) January 30, 1976—Initiate onsite construction or installation of emission control equipment or process modification.

(iv) May 1, 1977—Complete onsite construction or installation or emission control equipment or process modification.

(v) July 1, 1977—Complete shakedown operations and performance tests for the applicable unit(s); achieve compliance with Kentucky Division of Air Pollution Regulation for sulfur dioxide sources and certify such compliance to the Regional Administrator. Ten days prior to any performance testing, notice must be given to the Regional Administrator to afford him the opportunity to have an observer present.

(4) Five days after the deadline for completing increments in paragraphs (b)(2)(ii) through (b)(2)(v) and (b)(3)(ii) through (b)(3)(iv) of this section, certify to the Regional Administrator whether the increment has been met.

(5) (i) None of the above paragraphs shall apply to a source which is presently in compliance with applicable regulations. The owner or operator of any fuel-burning facility with an aggregate heat input of more than 250 million BTU per hour which is presently in compliance, shall certify such compliance to the Regional Administrator by November 3, 1975. The Regional Administrator may request whatever supporting information he considers necessary for proper certification.

(ii) Any compliance schedule adopted by the State and approved by the Administrator shall satisfy the requirements of this paragraph for the affected source.

(iii) Any owner or operator subject to a compliance schedule in this paragraph may submit to the Regional Administrator no later than December 1, 1975, a proposed alternative compliance schedule. No such compliance schedule may provide for final compliance after the final compliance date in the applicable compliance schedule of this paragraph. If approved by the Administrator, such schedule shall satisfy the requirements of this paragraph for the affected source.

(6) Nothing in this paragraph shall preclude the Administrator from promulgating a separate schedule for any source to which the application of a compliance schedule in this paragraph fails to satisfy the requirements of §§51.261 and 51.262(a) of this chapter.

[38 FR 16145, June 20, 1973, as amended at 40 FR 3418, Jan. 22, 1975; 40 FR 14071, Mar. 28, 1975; 40 FR 29541, July 14, 1975; 40 FR 40160, Sept. 2, 1975; 51 FR 40675, 40676, 40677, Nov. 7, 1986; 54 FR 25258, June 14, 1989]

§52.928 Control strategy: Sulfur oxides.

The revised SO_2 emission limit for large coal-fired boilers in Bell, Clark, and Woodford Counties, submitted on June 29, 1979, is disapproved since it does not provide for attainment and maintenance of all SO_2 NAAQS. The limit approved by EPA on May 10, 1976 (41 FR 19105), remains the limit applicable to these sources.

[49 FR 11091, Mar. 23, 1984]

§52.929 [Reserved]

§52.930 Control strategy: Ozone.

(a) The VOC bubble for Alcan Foil Products in Louisville submitted as a SIP revision on March 3, 1986, is disapproved. The source must continue to meet all the requirements of Jefferson County Regulation 6.29.

(b) *Part D—disapproval*—(1) Campbell and Kenton Counties nonattainment area. The 1979 SIP revisions for these two counties are disapproved because the Commonwealth failed to submit evidence of legal authority to implement a vehicle inspection and maintenance program as required under section 172(b)(11)(B) of the Clean Air Act. No major new or modified sources of volatile organic compounds can be built in these two counties by virtue of the provisions of section 110(a)(2)(l) of the Clean Air Act.

(2) Northern Kentucky (Boone, Campbell and Kenton Counties) ozone nonattainment area. The demonstration of attainment of the ozone standards by the end of 1982, submitted as part of Kentucky's ozone SIP revision on June 23, 1982, (draft), September 27, 1982, and November 3, 1982, is disapproved. As a result, the extension of the attainment deadline until December 31, 1987, remains in effect, along with the related

requirement to submit a SIP revision addressing all requirements of Part D extension areas.

[46 FR 58082, Nov. 30, 1981, as amended at 48 FR 13169, Mar. 30, 1983; 51 FR 10210, Mar. 25, 1986; 54 FR 10983, Mar. 16, 1989; 60 FR 32469, June 22, 1995; 60 FR 40101, Aug. 7, 1995]

§ 52.931 Significant deterioration of air quality.

(a) Regulations for preventing significant deterioration of air quality. The provisions of § 52.21 (b) through (w) are hereby incorporated and made a part of the applicable state plan for the State of Kentucky only as they apply to permits issued pursuant to § 52.21 prior to final approval of Kentucky's Regulation for Prevention of Significant Deterioration (PSD), Visibility Monitoring, and Visibility New Source Review in Attainment Areas. The provisions of § 52.21 (b) through (w) are rescinded for permits issued after final approval of Kentucky's Regulation for Prevention of Significant Deterioration (PSD), Visibility Monitoring, and Visibility New Source Review in Attainment Areas.

(b) The Commonwealth of Kentucky has committed to revising the state's regulations accordingly when EPA amends the federal vessel emissions provisions contained in 40 CFR 51.166. In a letter dated October 17, 1986, Kentucky stated:

> As requested, the Division of Air Pollution Control hereby commits to changing the definition of ''building, structure, facility, or installation,'' and any other applicable definitions, when the issue of vessel emissions is resolved at the federal level, and after the federal regulation, 40 CFR 51.24, is amended.

(c) In a letter dated May 3, 1988, EPA informed Kentucky that the following caveat must be included in all potentially affected permits due to a decision of the U.S. Court of Appeals for the District of Columbia Circuit (*NRDC* v. *Thomas,* 838 F.2d 1224):

> In approving this permit, the Kentucky Division for Air Quality has determined that the application complies with the applicable provisions of the stack height regulations as revised by the EPA on July 8, 1985 (50 FR 27892). Portions of the regulations have been remanded by a panel of the U.S. Court of Appeals for the D.C. Circuit in NRDC v. *Thomas,* 838 F.2d 1224 (D.C. Cir. 1988). Consequently, this permit may be subject to modification if and when the EPA revises the regulation in response to the court decision. This may result in revised emission limitations or may affect other actions taken by the source owners or operators.

Kentucky responded with a letter dated May 11, 1988, stating in part:

> This is in response to your letter dated May 3, 1988 * * *. As requested by your letter, the Kentucky Division for Air Quality agrees to include the condition set forth in your letter, in all potentially affected permits issued under regulation 401 KAR 51:017 or 401 KAR 51:052. Therefore, we request that you consider this letter as our commitment that the required caveat will be included in all potentially affected permits * * *.

[54 FR 36311, Sept. 1, 1989]

§ 52.932 Rules and regulations.

(a) The last sentence of section 3(1) of Kentucky regulation 401 KAR 3:050, which specifies that a new fossil fuel fired steam electric generator's allowable SO_2 emissions may be calculated by averaging SO_2 emissions from existing units of this type and from new ones, is disapproved since it contravenes subpart D of 40 CFR part 60, New Source Performance Standards.

(b) Section 8(2)(a) of regulation 401 KAR 61:015 is disapproved in that it allows the Tennessee Valley Authority's Shawnee power plant until October 1, 1981, to achieve compliance with emissions limits which are not made more stringent by the 1979 Part D revisions, and which the source was previously required to meet by July 1, 1977.

(c) Section 8(2)(d) of regulation 401 KAR 61:015 is disapproved in that it allows sources until December 31, 1982, to achieve compliance with emission limits which are not made more stringent by the 1979 Part D revisions, and which the sources were previously required to meet prior to 1979.

[41 FR 19106, May 10, 1976, as amended at 46 FR 40188, Aug. 7, 1981]

§ 52.933 Control Strategy: Sulfur oxides and particulate matter.

In a letter dated March 27, 1987, the Kentucky Department for Natural Resources and Environmental Protection certified that no emission limits in the State's plan are based on dispersion techniques not permitted by EPA's

stack height rules. This certification does not apply to: Big Rivers-Green #1 & 2, Kentucky Utilities-Ghent #3 & 4, and Ashland Oil, Inc.-Catlettsburg.

[54 FR 23478, June 1, 1989]

§52.934 VOC rule deficiency correction.

(a) Sections 1.02, 1.08, 6.12, 6.13, 6.16, 6.18, 6.19, 6.23, 6.29, 6.30, 6.31, 6.32, 6.33, 6.34, 6.35, 7.11, 7.12, 7.16, 7.18, 7.19, 7.23, 7.52, 7.56, 7.57, 7.58, 7.59, 7.60 and 7.61 of the Jefferson County portion of the Commonwealth of Kentucky SIP are being approved. The Commonwealth submitted these regulations to EPA for approval on February 12, 1992. These sections were intended to correct deficiencies cited in a letter calling for the Commonwealth to revise its SIP for ozone from Greer C. Tidwell, the EPA Regional Administrator, to Governor Wallace G. Wilkinson on May 26, 1988, and clarified in a letter from Winston A. Smith, Air, Pesticides & Toxics Management Division Director, to William C. Eddins, Director of the Commonwealth of Kentucky Division for Air Quality.

(b) Sections 1.05, 1.06, 6.17, 6.36, 6.37, and 6.40 of the Jefferson County portion of the Commonwealth of Kentucky SIP are being approved. The Commonwealth submitted these regulations to EPA for approval on March 4, 1993. These sections were intended to correct deficiencies cited in a letter calling for the Commonwealth to revise its SIP for ozone from Greer C. Tidwell, the EPA Regional Administrator, to Governor Wallace G. Wilkinson on May 26, 1988, and clarified in a letter from Winston A. Smith, Air, Pesticides & Toxics Management Division Director, to William C. Eddins, Director of the Commonwealth of Kentucky Division for Air Quality.

(c) Deficiencies in 1.12 Emissions Trading, however, have not been corrected. The above deficiencies must be corrected according to the letters mentioned above, the proposed post-1987 ozone policy (52 FR 45044), and other EPA guideline relating to the deficiencies before the SIP for ozone can be fully approved.

[59 FR 32352, June 23, 1994]

§52.935 PM_{10} State implementation plan development in group II areas.

On July 7, 1988, the State submitted a committal SIP for the cities of Ashland and Catlettsburg in Boyd County. The committal SIP contains all the requirements identified in the July 1, 1987, promulgation of the SIP requirements for PM_{10} at 52 FR 24681. The SIP commits the State to submit an emissions inventory, continue to monitor for PM_{10}, report data and to submit a full SIP if a violation of the PM_{10} National Ambient Air Quality Standards is detected.

[55 FR 4172, Feb. 7, 1990]

§52.936 Visibility protection.

(a) The requirements of Section 169A of the Clean Air Act are not met because the plan does not include approvable procedures meeting the requirements of 40 CFR 51.307 (b) and (c) for protection of visibility in mandatory Class I Federal areas from sources in nonattainment areas.

(b) Regulations for visibility monitoring and new source review. The provisions of §52.28 are hereby incorporated and made part of the applicable plan for the State of Kentucky.

[54 FR 36311, Sept. 1, 1989]

§52.937 Review of new sources and modifications.

(a) Approval—EPA is approving the section 182(f) oxides of nitrogen (NO_X) reasonably available control technology (RACT) exemption request submitted by the Kentucky Department for Environmental Protection on August 16, 1994, for the Kentucky portion of the Huntington-Ashland ozone (O_3) moderate nonattainment area. This approval exempts this area from implementing NO_X RACT on major sources of NO_X. If a violation of the O_3 NAAQS occurs in the area, the exemption from the requirement of section 182(f) of the CAA in the applicable area shall not apply.

(b) [Reserved]

[60 FR 21717, May 3, 1995]

Subpart T—Louisiana

§ 52.970 Identification of plan.

(a) Title of plan: ''The Louisiana Air Control Commission Implementation Plan.''

(b) The plan was officially submitted on January 28, 1972.

(c) The plan revisions listed below were submitted on the dates specified.

(1) Certification that public hearings were held on the State's implementation plan was submitted on February 28, 1972. (Non-regulatory)

(2) Response to comments by Region VI on the plan was transmitted by the Louisiana Air Control Commission on May 8, 1972. (Non-regulatory)

(3) Revisions to Louisiana Air Control Regulations 6, 8, 18, 19, 22, A22, 27, 28, control strategy for photochemical oxidants-hydrocarbons, prevention of air pollution emergency episodes, source surveillance, and procedures for submission and approval and compliance schedules were submitted by the Governor on July 17, 1972.

(4) Revisions concerning the control strategy for photochemical oxidants and hydrocarbon for Region 106 was submitted by the Governor on March 30, 1973. (Regulatory)

(5) Revision of Section 6.1 of the State air control regulations was submitted by the Governor on April 25, 1973.

(6) A revision concerning the control strategy for particulate matter for the Southern Louisiana-Southeast Texas AQCR was submitted by the Governor on January 2, 1973.

(7) Variances to Emission Limiting Regulations adopted by the Louisiana Air Control Commission on October 29, 1975, December 12, 1975, and April 6, 1976, and submitted by the Governor on April 22, 1976.

(8) Commission Orders creditable as emission offsets for the GM Plant in Shreveport were submitted by the Governor on January 25, 1978 as amendments to the Louisiana State Implementation Plan.

(9) A proposed dedesignation of the Shreveport area as an AQMA for particulate matter was submitted by the Governor on December 9, 1977.

(10) An administrative revision of the Air Quality Surveillance Network was submitted by the Louisiana Air Control Commission on April 3, 1978. (Non regulatory)

(11) Revisions to Regulation 19.0, Emission Standards for Particulate Matter, as adopted on November 30, 1977, were submitted by the Governor on December 9, 1977.

(12) Minor changes and administrative revisions to regulations 2.0, 3.0, 4.0, 5.0, 6.0, 7.0, 8.0, 9.0, 10.0, 11.0, 12.0, 13.0, 14.0, 15.0, 16.0, and 17.0 of the Louisiana SIP were submitted by the Governor on December 9, 1977.

(13) A variance to Regulation 19.5 for Kaiser Aluminum & Chemical Corporation at Norco, Louisiana was submitted by the Governor on August 31, 1978.

(14) Revisions to the Air Control Regulations 18.1, 18.3, 18.5, 18.6–18.6.2, 18.7, 20.1–20.8, 21.1–21.6.4, 23.0–23.4.2, 24.1–24.5, 24.6.2, 24.7–24.7.3, 24.8, 25.0–25.6.2, 26.0–26.2, 26.4–26.8.2, 27.0–27.5.4, 28.0–28.6.2 and 30.0, as adopted by the Louisiana Air Control Commission on November 30, 1977, were submitted by the Governor on December 9, 1977.

(15) Revisions to the plan for attainment of standards for ozone (Part D requirements) were submitted by the Governor on April 30, 1979.

(16) Evidence of notice and public hearing for the April 30, 1979 plan was submitted by the Governor on June 20, 1979.

(17) Emission inventory information, emission reduction information, a certification of the lack of major degreasing sources, and a commitment to adopt future regulations were submitted by the Louisiana Air Control Commission on August 28, 1979 (non-regulatory).

(18) Schedule for the modification and submittal of regulations 22.6 and regulation 6.3.8 were submitted by the Louisiana Air Control Commission on October 11, 1979 (non-regulatory).

(19) Regulations 22.17 and 22.18, adopted by the Louisiana Air Control Commission on September 25, 1979 were submitted by the Governor on October 18, 1979.

(20) On January 10, 1980, the Governor submitted final revisions to the ambient monitoring portion of the plan.

(21) Revised Regulation 22.8(c) was submitted by the Governor on June 20, 1979. This regulation was adopted by

the Louisiana Air Control Commission on March 27, 1979.

(22) Revised Regulation 22.5 was submitted by the Governor on April 30, 1979. This regulation was adopted by the Louisiana Air Control Commission on March 27, 1979. A second revision to Regulation 22.5 was submitted by the Governor on July 7, 1979, as adopted by the Louisiana Air Control Commission on June 26, 1979.

(23) Revised Regulations 6.3.8, 22.3, 22.6.1, 22.6.2, 22.10, and 22.12.4 were submitted by the Governor on December 10, 1979. These regulations were adopted by the Louisiana Air Control Commission on November 27, 1979. A second revision to Regulation 6.3.8 was submitted by the Governor on October 23, 1980. The second revision was adopted by the Louisiana Air Control Commission on September 25, 1980.

(24) Revisions to the Air Control Regulations 24.6.1 and 24.7.4, as adopted by the Louisiana Environmental Control Commission on March 27, 1979, were submitted by the Governor on April 30, 1979.

(25) Revised Regulations 22.9.2, 22.9.3(b), 22.19, 22.20, 22.21, 22.22 and 22.23 and revised Regulation 4.0 (i.e. sections 4.99 through 4.116) were adopted by the State on November 27, 1979 and submitted by the Governor on December 10, 1979; and revised Regulations 22.3 and 22.20.2 were adopted by the State on July 22, 1980 and submitted by the Governor on September 12, 1980.

(26) Revised Regulations 22.9.3(b), 22.20.3, and 22.23.7 were adopted by the State on December 11, 1980 and submitted by the Governor on January 12, 1981; revised Regulation 22.21.2(E) was adopted by the State on April 23, 1981 and submitted by the Governor on June 3, 1981; and, revised Regulation 22.19.2(B) was adopted by the State on June 25, 1981 and submitted by the Governor on July 22, 1981.

(27) Revisions to the Air Control Regulations 6.1.1, 18.2, 18.4, 18.6.3, 19.5.1, 24.9.1, 24.9.2, 26.3.1, 26.3.2 and 51.11, as adopted by the Louisiana Environmental Control Commission on September 25, 1980, were submitted by the Governor on October 23, 1980.

(28) Revisions to the plan for permit fee systems, interstate pollution abatement, public availability of emission data, maintenance of pay, permit public comment, and public notification of exceedances of the primary national ambient air quality standards (NAAQS), were submitted by the Governor on April 30, 1979. In addition, revised submittals for permit fee schedules were submitted on July 7, 1979; September 12, 1980; October 23, 1980; and January 12, 1981. The September 12, 1980 letter also included a new §51.285 (a), (b) and (c). Finally, the State sent a notification letter on August 7, 1979, which corrected a typographical error in the maintenance of pay revision.

(29) A revision to the Air Control Regulations 22.9.3(d) as adopted by the Louisiana Air Control Commission on December 11, 1980, was submitted by the Governor on January 12, 1981.

(30) Revisions to the Air Control Regulations 8.5.1, 22.3.1.1, 22.3.1.2, and 22.10, as adopted by the Louisiana Air Control Commission on April 23, 1981, were submitted by the Governor on June 3, 1981.

(31) A revision to the Air Control Regulation 22.9.3(a), as adopted by the Louisiana Air Control Commission on May 28, 1981, was submitted by the Governor on June 3, 1981.

(32) A revision to the Air Control Regulation 22.3.2, as adopted by the Louisiana Air Control Commission on July 23, 1981, was submitted by the Governor on August 17, 1981.

(33) The Louisiana State Implementation Plan for lead and Regulations for—the Control of Air Pollution from lead, 10.0—10.3 and 19A.0, were submitted to EPA on July 27, 1979, by the Governor of Louisiana as adopted by the Louisiana Air Control Commission on July 24, 1979. Letters of Clarification dated January 6, 1982, April 1, 1982 and May 4, 1982 also were submitted. No action is taken on the Baton Rouge area.

(34) Section 6.1 of Regulation 6.0 amended and adopted by the Louisiana Environmental Control Commission on October 22, 1981, was submitted by the Governor on November 30, 1981.

(35) Revisions to the Air Control Regulations 4.102, 4.110, 22.20.2 and 22.21.2(D), as adopted by the Louisiana Environmental Control Commission on December 11, 1980, were submitted by the Governor on January 12, 1981.

(36) [Reserved]

(37) Revisions to the Air Control Regulations 4.14, 4.36, 6.6, 22.3.1.1, and 22.3.1.2, as adopted by the Louisiana Environmental Control Commission on February 26, 1981, were submitted by the Governor on March 25, 1981.

(38) Revisions to the Air Control Regulations 17.13, 23.4.1.1 and 23.4.4, as adopted by the Louisiana Environmental Control Commission on January 28, 1982, were submitted by the Governor on February 15, 1982.

(39) A revision to section 2210 of the Louisiana Air Control Law was submitted to EPA on March 10, 1982. The Section was renamed Section 1077 of the Environmental Affairs Act, by the Louisiana Legislature, and was effective January 1, 1980.

(40) The Louisiana State Implementation Plan for lead for the Baton Rouge area was submitted on July 27, 1979, with letters of clarification and revisions dated January 4, 1983, September 15, 1983, September 30, 1983. The final lead control plan was submitted in a letter dated October 31, 1983, as adopted by the Louisiana Air Control Commission on October 20, 1983.

(41) Revisions to sections 2.3, 3.1, 3.4, and 4.1 of the Rules and Regulations for the Fee System of the Air Quality Control Program, as adopted by the Louisiana Environmental Control Commission on January 26, 1983, were submitted by the Louisiana Department of Natural Resources (now the Department of Environmental Quality), Air Quality Division, on November 17, 1983.

(42) Deletion of Air Control Regulation 14.0, and deletion of hydrocarbon guideline standard from Table 1, 1a, and 2, as adopted by the Louisiana Environmental Control Commission on July 28, 1983, was submitted by the Governor on October 19, 1983.

(43) Revisions to the Air Control Regulation 22.22 as adopted by the Louisiana Environmental Control Commission on September 23, 1982, and submitted by the Governor on July 14, 1983.

(i) Incorporation by reference.

(A) Regulation 22.22.1(A) and 22.22.2(A) Letter dated July 14, 1983, from the State of Louisiana and which change the reference for the test methods from a CTG document to the Louisiana Air Quality Regulations Division's Source Test Manual. These regulations were adopted on September 23, 1982.

(44) On October 4, 1985, the Governor submitted a revision entitled, ''Protection of Visibility for Mandatory Class I Federal Areas,'' July 12, 1985. This submittal included new source review and visibility monitoring strategy as adopted by the Secretary of the Louisiana Department of Environmental Quality in October 1985.

(45) On August 14, 1985, the Governor of Louisiana submitted a Prevention of Significant Deterioration (PSD) Plan including Air Quality Regulations—Part V, (sections 90.1–90.19) as adopted by the Secretary of the Department of Environmental Quality on May 23, 1985. Air Quality Regulations—Part V provides authority for the State to implement the PSD program in certain areas of the State. Letters of commitment for air quality modeling (dated September 30, 1985) and Federal stack height and dispersion technique regulation (dated June 3, 1986) were submitted by the Secretary of Louisiana Department of Environmental Quality.

(i) Incorporation by reference.

(A) Louisiana Air Quality Regulations—Part V, Prevention of Significant Deterioration of Air Quality, except that no provision of this part applies to Indian Reservations meaning any Federally recognized reservation established by Treaty, Agreement,Executive Order, or Act of Congress, as adopted on May 23, 1985.

(B) A letter from the Secretary of Louisiana Department of Environmental Quality dated September 30, 1985, which commits the Department to use only the EPA approved air quality models in accordance with the provisions of 40 CFR 51.24(1) [now 40 CFR 51.166(1)] and to submit a stack height and dispersion techniques SIP revision by April 8, 1986.

(C) A letter from the Secretary of Louisiana Department of Environmental Quality dated June 3, 1986, which certifies that the Department interprets the provisions of section 90.8 of Louisiana PSD regulations as having the same meaning as the Federal stack height and dispersion technique regulation, 40 CFR 51.1(hh)-(kk) [now 40 CFR 51.100(hh)-(kk)], promulgated by EPA in the FEDERAL REGISTER of July 8,

1985, and that the State will apply, implement, and enforce these requirements in the PSD permitting process.

(D) A narrative explanation and additional requirements entitled ''Prevention of Significant Deterioration Revisions to the Louisiana State Implementation Plan''.

(46) On January 6, 1988, the Governor of Louisiana submitted a revision to the State Implementation Plan (SIP) that contained Air Quality Regulations, LAC 33: Part III, Section 921, Stack Heights, as adopted by the Secretary of the Department of Environmental Quality on December 20, 1987. Section 921, Stack Heights, enables the State to ensure that the degree of emission limitation required for the control of any air pollutant under its SIP is not affected by that portion of any stack height which exceeds GEP or by any other dispersion technique.

(i) Incorporation by reference.

(A) Louisiana Air Quality Regulations—LAC 33: Part III, Section 921, Stack Heights, as adopted by the Secretary of the Department of Environmental Quality on December 20, 1987.

(ii) Other material—none.

(47) A revision exempting four rural carbon black plants—Ashland Chemical, Louisa, LA; Cabot Corporation, Centerville, LA; Cabot Corporation, Ville Platte, LA; and Columbian Chemicals, Franklin, LA—from further controls on acetylene emissions as required under Louisiana Air Quality Regulation 22.8 received from the Governor on January 12, 1987, and amended May 13, 1987.

(i) Incorporation by reference.

(A) A letter dated May 29, 1987, from Martha Madden, Secretary, Louisiana Department of Environmental Quality, to the Governor of Louisiana approving the exemptions from further controls on acetylene emissions for the four rural carbon black plants and ordering each facility to maintain its emissions at or below the levels specified in the attached summary of emissions.

(ii) Additional material.

(A) A summary of VOC emissions for each of the four rural carbon black plants exempted from further controls on acetylene emissions under Louisiana Air Quality Regulation 22.8.

(48) Part II of the Visibility Protection Plan was submitted by the Governor on October 26, 1987.

(i) Incorporation by reference.

(A) Revision entitled, ''Louisiana State Implementation Plan Revision: Protection of Visibility: Proposed Part II Long-Term Strategy, October 26, 1987''. This submittal includes a visibility long-term strategy and general plan provisions as approved and adopted by the Secretary of the Louisiana Department of Environmental Quality on October 26, 1987.

(B) Letter dated October 26, 1987, from Secretary of Louisiana Department of Environmental Quality (LDEQ), to the Governor approving the SIP revision.

(ii) Additional material.

(A) Letter dated June 16, 1988, from Administrator, Air Quality Division, LDEQ, to Chief, SIP/New Source Section (6T–AN), EPA Region 6, committing to make its three-year periodic review report available to the public as well as to EPA.

(49) The recodified and revised regulations of the Louisiana Administrative Code, Title 33, Part 3 (LAC:33:III) that were adopted by the State effective December 20, 1987, and submitted by the Governor by letters dated January 6, 1988, and October 4, 1988, for inclusion in the SIP. These regulations include LAC:33:III: Chapters 1, 5, 7, 9, 11, 13, 15, 17, 23, 56, 60, 63, and 65, except LAC:33:III:111 ''Particulate matter,'' and ''Suspended particulate matter,'' LAC:33:III:505.J, and LAC:33:III:505.L, which were previously disapproved, and LAC:33:III:6099, which was withdrawn by the Governor.

(i) Incorporation by reference. (A) Louisiana Administrative Code, Title 33, Part 3, Chapters 1, 5, 7, 9, 11, 13, 15, 17, 23, 56, 60, 63, and 65 as adopted by Louisiana Department of Environmental Quality on December 20, 1987, except LAC:33:III: section 111 ''Particulate matter,'' ''Suspended particulate matter,'' section 505.J, section 505.L, and section 6099.

(ii) Additional material. (A) A letter dated December 16, 1987, from Martha Madden, Secretary of the Louisiana Department of Environmental Quality,

to the Governor of Louisiana, approving the codified air quality regulations effective December 20, 1987.

(50) The Louisiana State Implementation Plan for PM_{10} as submitted by the Governor in a letter dated July 26, 1988, and adopted by the State effective June 20, 1988.

(i) Incorporation by reference. (A) Revisions to the Louisiana Administrative Code, Title 33, Chapter III, Sections 111, 509.B, 509.I.8.a, 709, 1301.B, 1303.A, 1305.A., 1311.B, 1311.C, 1313.C, 1315, 1319.G, 5609.A.1, 5609.A.2, 5609.A.3, and Tables 1, 1a, and 2 of chapter 7 as adopted effective June 20, 1988.

(B) A letter dated May 22, 1989, from Mike D. McDaniel, Louisiana Department of Environmental Quality, to William B. Hathaway, U.S. Environmental Protection Agency.

(ii) Additional material.

(A) A letter dated July 26, 1988, from Paul H. Templet, Secretary, Louisiana Department of Environmental Quality, to the Governor of Louisiana approving the adoption of amendments to the Louisiana Air Quality Regulations to implement the new PM_{10} standard effective June 20, 1988.

(B) A narrative supplement to the Louisiana PM_{10} submitted by the Governor in a letter dated July 26, 1988.

(51) Revision to the Louisiana Lead State Implementation Plan (SIP) submitted by the Governor in a letter dated July 18, 1986.

(i) Incorporation by reference.

(A) An amended Compliance Order dated January 31, 1986, issued by the Secretary of the State of Louisiana Department of Environmental Quality in the matter of Ethyl Corporation, Baton Rouge, Louisiana.

(ii) Additional material.

(A) Computer modeling submitted by letter dated May 27, 1988, from Doug Walters, Louisiana Department of Environmental Quality, to Joe Winkler, U.S. Environmental Protection Agency.

(B) Explanatory letter dated January 27, 1989, from Gustave Von Bodungen, Louisiana Department of Environmental Quality, to Gerald Fontenot, U.S. Environmental Protection Agency.

(52) On October 31, 1983, the Governor submitted a request to revise the Louisiana SIP to include an Alternative Emission Reduction Plan for the Vulcan Materials Company facility located at Geismar, Ascension Parish. A permit was issued by LDEQ on March 24, 1983 (#1829T), but after several revisions, the final permit for the trade is #1829T (M–2), issued July 28, 1989. This Bubble uses credits obtained from installation of a vapor recovery system on a tank farm of five VOC storage tanks in lieu of controls on one process vent and one VOC storage tank.

(i) Incorporation by reference.

(A) LDEQ Permit number 1829T (M–2), Revision of Bubble Permit—Vulcan Chemicals Company, Geismar, Ascension Parish, Louisiana, issued July 28, 1989.

(ii) Additional material.

(A) Letter dated June 28, 1989, from the Administrator of the Louisiana Office of Air Quality, giving assurances that the State has resources and plans necessary to strive toward attainment and maintenance of the NAAQS for ozone taking into account the influence of this Bubble on air quality.

(53) On May 5, 1986, the Governor submitted a request to revise the Louisiana SIP to include an alternate Emission Reduction Plan for the American Cyanamid Company Fortier Plant located at Westwego, Jefferson Parish. A permit was issued by LDEQ on October 17, 1984 (#1896), but after several revisions, the final permit for the trade is #1896 (M–2), issued July 20, 1989. This Bubble uses credits obtained from the change of service of three storage tanks from VOC to non-VOC usage to offset reductions required by controlling one methanol storage tank.

(i) Incorporation by reference.

(A) LDEQ permit number 1896 (M–2) issued July 20, 1989, a Revision to Bubble Permit No. 1896 (M–1)—American Cyanamid Company, Westwego, Jefferson Parish, Louisiana.

(ii) Additional material.

(A) Letter dated June 6, 1989, from the Administrator of the Louisiana Office of Air Quality, giving the State position that the Volatile Organic Compounds that have been shifted out of the emission reduction credit donating tanks have not been shifted elsewhere in the nonattainment area.

(B) Letter received by EPA on March 31, 1989, from Mr. Addison Tatum of the State of Louisiana, including calculations for the permit.

(54) A revision to allow an alternative emission reduction plan (''bubble'') for the Vista Chemical Company facility in Westlake, Louisiana, as submitted by the Governor on November 22, 1983, and amended by Louisiana Department of Environmental Quality Air Quality Division permit #1828 M–2 issued September 25, 1986.

(i) Incorporation by reference.

(A) Louisiana Department of Environmental Quality Air Quality Division permit #1828 M–2 issued September 25, 1986.

(ii) Additional material.

None.

(55) A revision to allow an alternative emission reduction plan [''bubble''] for the Union Carbide facility in Hahnville, Louisiana, as submitted by the Governor on October 19, 1983, and amended by Louisiana Department of Environmental Quality Air Quality Division permit #1836T(M–1) issued April 23, 1987, and revised on May 5, 1990.

(i) Incorporation by reference

(A) Louisiana Department of Environmental Quality Air Quality Division permit 1828 M–2 issued September 25, 1986.

(ii) Additional material

None.

(55) A revision to allow an alternative emission reduction plan [''bubble''] for the Union Carbide facility in Hahnville, Louisiana, as submitted by the Governor on October 19, 1983, and amended by Louisiana Department of Environmental Quality Air Quality Division permit #1836T(M–1) issued April 23, 1987, and revised on May 5, 1990.

(i) Incorporation by reference.

(a) Louisiana Department of Environmental Quality Air Quality Division permit #1836T(M–1) issued April 23, 1987, and revised on May 5, 1990.

(ii) Additional materal

None.

(56) Revisions to Louisiana's volatile organic compound regulations were submitted by the Governor on June 13, 1990.

(i) Incorporation by reference.

(A) Revisions to Title 33, Environmental Quality, Part III. Air, Chapter 21. Control of Emission of Volatile Organic Compounds, Subchapter B. Organic Solvents, Section 2123. Organic Solvents, paragraphs C.6. and D.3., effective February 20, 1990.

(57) Revisions to the Louisiana State Implementation Plan for LAC:33:III: Section 509 Prevention of Significant Deterioration (PSD) sections (509)(B) (Baseline Area) (1), 509(B) (Baseline Area) (2), 509(B) (Baseline Concentration) (1), (509)(B) (Baseline Concentration) (1)(b), 509(B) (Baseline Concentration) (2)(a), 509(B) (Baseline Concentration) (2)(b), 509(B) (Baseline Date) (1)(a), 509(B) (Baseline Date) (1)(b), 509(B) (Baseline Date) (2), 509(B) (Baseline Date) (2)(a), 509(B) (Baseline Date) (2)(b), 509(B) (Net Emission Increases) (4), 509(D), and 509(P)(4), as adopted by the Secretary of Louisiana Department of Environmental Quality (LDEQ) on July 20, 1990, were submitted by the Governor on October 26, 1990.

(i) Incorporation by reference.

(A) LAG:33:III: Section 509 Prevention of Significant Deterioration Sections (509)(B) (Baseline Area) (1), 509(B) (Baseline Area) (2), 509(B) (Baseline Concentration) (1)(a), (509)(B) (Baseline Concentration) (1)(b), 509(B) (Baseline Concentration) (2)(a), 509(B) (Baseline Concentration) (2)(b), 509(B) (Baseline Date (1)(a), 509(B) (Baseline Date) (1)(b), 509(B) (Baseline Date) (2), 509(B) (Baseline Date) (2)(a), 509(B) (Baseline Date) (2)(b), 509(B) (Net Emission Increase) (4), 509(D), and 509(P)(4) as amended on July 20, 1990.

(ii) Additional Material—None.

(58) Louisiana Air Quality Regulation section 6.6 as revised and adopted by the Louisiana Environmental Control Commission on February 26, 1981, submitted by the Governor on March 25, 1981, and approved by the Environmental Protection Agency on June 9, 1982.

(i) *Incorporation by reference.* (A) Louisiana Air Quality Regulation section 6.6 as revised and adopted by the Louisiana Environmental Control Commission on February 26, 1981, submitted by the Governor on March 25, 1981, and approved by the Environmental Protection Agency on June 9, 1982.

(ii) *Additional material.* (A) Letter dated March 24, 1981, from the Secretary of the Louisiana Department of

Natural Resources to the Governor of Louisiana acknowledging approval of Louisiana Air Quality Regulation section 6.6 by the Louisiana Environmental Control Commission effective on February 26, 1981.

(59) A revision to the Louisiana State Implementation Plan (SIP) to include revisions to LAC, Title 33, ''Environmental Quality,'' Part III. Air, Chapter 15. Emission Standards for Sulfur Dioxide, effective April 20, 1992, and submitted by the Governor by cover letter dated August 5, 1992.

(i) Incorporation by reference.

(A) Revisions to LAC, Title 33, ''Environmental Quality,'' Part III. Air, Chapter 15. Emission Standards for Sulfur Dioxide, Section 1501, ''Degradation of Existing Emission Quality Restricted;'' Section 1503, ''Emission Limitations;'' Table 4, ''Emissions—Methods of Contaminant Measurement;'' Section 1505, ''Variances;'' Section 1507, ''Exceptions;'' Section 1509, ''Reduced Sulfur Compounds (New and Existing Sources);'' Section 1511, ''Continuous Emissions Monitoring;'' and Section 1513, ''Recordkeeping and Reporting,'' effective April 20, 1992.

(60) A revision to the Louisiana State Implementation plan (SIP) to include revisions to Louisiana Administrative Code (LAC), Title 33, Environmental Quality, Part III. Air, Chapter 1, Chapter 21, and Chapter 61 as submitted by the Governor on June 13, 1990, October 26, 1990, May 24, 1991, and March 24, 1992.

(i) Incorporation by reference.

(A) LAC, Title 33, Environmental Quality, Part III. Air, Chapter 21 (December 1987). Control of Emission of Organic Compounds, except section 2105. Storage of Volatile Organic Components (Small Tanks).

(B) Revisions to LAC, Title 33, Environmental Quality, Part III. Air, Chapter 1. General Provisions, section 111. Definitions–Administrator, Administrative Authority*, Attainment Areas, Nonattainment Areas, SIP, Volatile Organic Compound, and Chapter 21. Control of Emission of Organic Compounds, Subchapter A. General, section 2103. Storage of Volatile Organic Compounds paragraphs A., C., D.1., D.1.a. through D.1.d., D.2., D.2.a., D.2.b., D.3., E., F., H.1., H.2., I. effective January 20, 1990.

(C) Revisions to LAC, Title 33, Environmental Quality, Part III. Air, Chapter 21. Control of Emission of Organic Compounds Subchapter A. General, section 2107. Volatile Organic Compounds–Loading, section 2109. Oil/Water–Separation, paragraphs A.1. through A.4., B. through D., section 2113. Housekeeping, paragraphs A.1 through A.3., A.5., section 2117. Exemptions, section 2119. Variances B., and Subchapter D. Cutback Paving Asphalt section 2127. Cutback Paving Asphalt, paragraphs A., B., C.1., C.2., C.3., D., D.1., D.1.b., D.1.c., D.1.d., and D.2., effective February 20, 1990.

(D) Revisions to LAC, Title 33, Environmental Quality, Part III. Air, Chapter 21. Control of Emission of Organic Compounds, Subchapter B. Organic Solvents, section 2123. Organic Solvents, paragraphs C., C.1. through C.5., C.7. through C.9., effective February 20, 1990.

(E) Revisions to LAC, Title 33, Environmental Quality, Part III. Air, Chapter 21. Control of Emission of Organic Compounds, Subchapter F. Gasoline Handling, section 2131. Filling of Gasoline Storage Vessels, paragraphs A., B., B.1., B.3., D., D.1., D.4., D.5., E., F., and G., section 2133. Gasoline Bulk Plants paragraphs A., A.1., A.3. through A.6., B., B.3., B.4., C. and D., section 2135. Bulk Gasoline Terminals paragraphs A., B., B.1.a., B.1.a.i., B.1.a.iii., B.1.d., B.2. through B.5., and C. through E., E.1. through E.4., and section 2137. Gasoline Terminal Vapor-Tight Control Procedure. effective July 20, 1990.

(F) Revisions to LAC, Title 33, Environmental Quality, Part III. Air, Chapter 21. Control of Emission of Organic Compounds Subchapter A. General, section 2101. Compliance Schedules, section 2115. Waste Gas Disposal paragraphs A., B., C., D., F., G., H., I.1. through I.5., J. through K., section 2121. Fugitive Emission Control paragraphs B., B.1, B.2., C., C.1.b., C.1.b.i., C.1.b.ii., C.1.b.iii., C.1.c, C.2., C.2.b., C.2.b.i., C.4., C.4.c., C.4.d., C.5. and G., Subchapter C. Vapor Degreasers, section 2125. Vapor Degreasers paragraphs A., A.1., A.2., A.2.i. through A.2.m., A.3., A.3.a. through A.3.d., B., B.1., B.7., B.8., C., C.1., C.1.a. through C.1.c.,

C.1.i., C.1.j., and D. through G., Subchapter E. Perchloroethylene Dry Cleaning Systems, section 2129. Perchloroethylene Dry Cleaning Systems paragraphs A., A.1., A.2., A.2.a. through A.2.c., C., and D., Subchapter H. Graphic Arts, section 2143. Graphic Arts (Printing) by Rotogravure and Flexographic Processes paragraphs A., A.1., A.3., A.5., B., C. and D., Subchapter I. Pharmaceutical Manufacturing Facilities, section 2145. Pharmaceutical Manufacturing Facilities, paragraphs A., A.1., A.1.c., and E. through G. effective November 20, 1990.

(G) Revisions to LAC, Title 33, Environmental Quality, Part III. Air, Chapter 21. Control of Emissions of Organic Compounds Subchapter A. General, section 2103. Storage of Volatile Organic Compounds paragraphs B.,D., D.2.c. through D.2.e., G., H.3., I.2.c., I.4. and I.5., section 2107. Volatile Organic Compounds–Loading paragraphs D.3. and D.4., section 2109. Oil/Water Separation paragraphs A., B.4., and B.5., section 2111. Pumps and Compressors, section 2113. Housekeeping paragraph A.4., section 2119. Variances paragraph A.; Subchapter D. Cutback Paving Asphalt, section 2127. Cutback Paving Asphalt paragraphs C. and D.1.a. effective April 20, 1991.

(H) Revisions to LAC, Title 33, Environmental Quality, Part III. Air, Chapter 21. Control of Emission of Organic Compounds, section 2115. Waste Gas Disposal paragraphs I., K., and K.4., section 2121. Fugitive Emission Control paragraphs A., C.1., C.1.b.iv. through C.1.b.vi., C.4.a., C.4.b., C.4.h., D., D.1., D.1.b. through D.1.f., and D.2., seciton 2123. Organic Solvents paragraphs A., A.1. through A.3., B., B.1., B.1.a. through B.1.c., C.11., D., D.1. through D.9., E., E.1. through E.7., F., and F.1. through F.4., Subchapter F. Gasoline Handling, section 2131. Filling of Gasoline Storage Vessels paragraphs D.2. and D.3., section 2135. Bulk Gasoline Terminals paragraph E.5., Subchapter G–Petroleum Refinery Operations, section 2139. Refinery Vacuum Producing Systems paragraphs A. and B. and section 2141. Refinery Process Unit Turnarounds effective July 20, 1991.

(I) Revisions to LAC, Title 33, Environmental Quality, Part III. Air, Chapter 61. Division's Sources Test Manual, Subchapter A. Method 43–Capture Efficiency Test Procedures section 6121 through section 6131 effective July 20, 1991.

(J) Revisions to LAC, Title 33, Environmental Quality, Part III. Air Chapter 1. General Provisions, section 111. Definitions–Coating, Department, Distance from Source to Property Line, Exceedance, Hydrocarbon, Leak, Miscellaneous Metal Parts and Products Coating, Nonattainment Area, Ozone Exceedance, SIP effective August 20, 1991.

(61) A revision to the Louisiana SIP to include revisions to LAC, Title 33, ''Environmental Quality,'' Part III. Air, Chapter 21, Control of Emission of Organic Compounds, Section 2132—Stage II Vapor Recovery Systems for Control of Vehicle Refuelling Emissions at Gasoline Dispensing Facilities effective November 20, 1992, and submitted by the Governor by cover letter dated November 10, 1992.

(i) Incorporation by reference.

(A) Revisions to LAC, Title 33, ''Environmental Quality,'' Part III. Air, Chapter 21, Control of Emission of Organic Compounds, Section 2132—Stage II Vapor Recovery Systems for Control of Vehicle Refuelling Emissions at Gasoline Dispensing Facilities, effective November 20, 1992; and Chapter 65, Section 6523—Fee Schedule Listing, effective November 20, 1992.

(ii) Additional materials.

(A) November 15, 1993, narrative plan addressing: Legal authority, control strategy, compliance schedules, air quality surveillance, public notice, determination of regulated universe, Louisiana Department of Environmental Quality recordkeeping, facility recordkeeping, annual in-use above ground inspections, program penalties, training, and benefits.

(62) Alternative emission reduction (bubble) plan for the Dow Chemical facility located in Plaquemine, Iberville Parish, as adopted by the Louisiana Environmental Control Commission on July 28, 1983, submitted by the Governor on October 19, 1983, and amended by the Louisiana Department of Environmental Quality with permit number 1838T(M–2) issued on October 16, 1991.

(ii) Incorporation by reference.

(A) Permit number 1838T(M–2) as issued by the Louisiana Department of Environmental Quality on October 16, 1991.

(ii) Additional material.

(A) Letter dated September 17, 1991, from the Administrator of the Office of Air Quality at the Louisiana Department of Environmental Quality to the Chief of the Planning Section at the Air Programs Branch of the U.S. Environmental Protection Agency—Region 6, furnishing State assurances.

(63) The State is required to implement a Small Business Stationary Source Technical and Environmental Compliance Assistance Program (PROGRAM) as specified in the plan revision submitted by the Governor on October 22, 1992. This plan submittal, as adopted by the Secretary of the Louisiana Department of Environmental Quality (LDEQ) on October 22, 1992, was developed in accordance with section 507 of the Clean Air Act (CAA).

(i) Incorporation by reference.

(A) Enrolled House Bill No. 1319 (Act 1037, Regular Session, 1992), signed into law by the Governor on July 13, 1992, and effective upon signature, enacting Louisiana Revised Statutes (R.S.) 30:2061 and 2062 and R.S. 36:239(H). Included in Act 1037 are provisions establishing a small business stationary source compliance assistance program; creating the State Ombudsman Office for small business; creating a Compliance Advisory Panel (CAP); establishing membership of the CAP; and establishing CAP powers, duties, and functions.

(B) Louisiana R.S. 30:2060N.(6), ''Toxic air pollutant emission control program'', (the small business stationary source technical and environmental compliance assistance program subsection), as in effect on October 22, 1992.

(C) State of Louisiana Executive Order No. EWE 92–4 dated February 10, 1992, and effective upon signature, creating and establishing an Office of Permits within the Executive Department, Office of the Governor.

(D) Letter from Louisiana Governor Edwards to Mr. Kai Midboe, Secretary, LDEQ, dated February 20, 1992, designating the Governor's Office of Permits as the official State office to serve as Ombudsman for the PROGRAM per the mandate of section 507 of the Federal CAA. The Coordinator of the Office of Permits will be responsible for administering the Small Business Ombudsman portion of the PROGRAM.

(ii) Additional material.

(A) Narrative SIP Revision entitled, ''Louisiana SIP, Concerning CAA Amendments of 1990, Section 507, Small Business Stationary Source Technical and Environmental Compliance Assistance (Program); November 15, 1992.''

(B) ''State of Louisiana Memorandum of Understanding Between the Governor's Office of Permits and the Louisiana Department of Environmental Quality'', signed (and effective) on April 7, 1992, by Mr. Kai David Midboe, Secretary, LDEQ, and Ms. Martha A. Madden, Coordinator, Governor's Office of Permits.

(C) Legal opinion letter dated October 22, 1992, from James B. Thompson, III, Assistant Secretary for Legal Affairs and Enforcement, LDEQ, to Mr. B. J. Wynne, Regional Administrator, EPA Region VI, regarding ''Appointment to Small Business Advisory Panel''.

(64) [Reserved]

(65) Revisions to the Louisiana Department of Environmental Quality Regulation Title 33, Part III, Chapter 9, Section 919, (February 2, 1993), and a technical correction (October 20, 1994). These revisions are for the purpose of implementing an emission statement program for stationary sources within the ozone nonattainment areas.

(i) Incorporation by reference.

(A) Revisions to LAC, title 33, Part III, Chapter 9, *General Regulations on Control of Emissions and Emissions Standards,* Section 919, *Emission Inventory,* adopted in the *Louisiana Register,* Vol. 19, No. 2, 184–186, February 20, 1993. All subsections except B.2.a. and B.2.d.

(B) Revisions to LAC, title 33, Part III, Chapter 9, *General Regulations on Control of Emissions and Emissions standards,* Section 919, *Emission Inventory,* adopted in the *Louisiana Register,* Vol 20, No. 10, 1102, October 20, 1994. Subsections B.2.a. and B.2.d.

(66) Revisions to the Louisiana Department of Environmental Quality Regulation Title 33, Part III, Chapter 2,

Section 223 and Chapter 19, Sections 1951–1973. These revisions are for the purpose of implementing a Clean Fuel Fleet Program to satisfy the Federal requirements for a Clean Fuel Fleet Program to be part of the SIP for Louisiana.

(i) Incorporation by reference.

(A) Revision to LAC, Title 33, Part III, Chapter 2, Rules and Regulations for the Fee System of the Air Quality Control Programs, Section 223, Fee Schedule Listing, adopted in the *Louisiana Register*, Vol. 20, No. 11, 1263, November 20, 1994.

(B) Revision to LAC, Title 33, Part III, Chapter 19, Mobile Sources, Subchapter B, Clean Fuel Fleet Program, Sections 1951–1973, adopted in the *Louisiana Register*, Vol. 20, No. 11, 1263–1268, November 20, 1994.

[37 FR 10869, May 31, 1972]

EDITORIAL NOTE: For FEDERAL REGISTER citations affecting §52.970, see the List of CFR Sections Affected in the Finding Aids section of this volume.

§52.971 Classification of regions.

The Louisiana plan was evaluated on the basis of the following classifications:

Air quality control region	Pollutant				
	Particulate matter	Sulfur oxides	Nitrogen dioxide	Carbon monoxide	Ozone
Southern Louisiana-Southeast Texas Interstate	II	I	III	III	I
Shreveport-Texarkana-Tyler Interstate	II	III	III	III	III
Monroe-El Dorado Interstate	II	III	III	III	III

[37 FR 10869, May 31, 1972, as amended at 45 FR 9909, Feb. 14, 1980]

§§52.972—52.974 [Reserved]

§52.975 Redesignations and maintenance plans; ozone.

(a) *Approval.* The Louisiana Department of Environmental Quality (LDEQ) submitted redesignation requests and maintenance plans for the areas of Beauregard, Lafourche, and St. Mary Parishes on June 14, 1993. Redesignation requests and maintenance plans were submitted for the areas of Grant and Lafayette on May 25, 1993. The EPA deemed these requests complete on September 10, 1993. Several approvability issues existed, however. The LDEQ addressed these approvability issues in supplemental ozone redesignation requests and revised maintenance plans. These supplemental submittals were received for the areas of Beauregard, Grant, Lafayette, Lafourche, and St. Mary Parishes on March 27, 1995, December 12, 1994, October 21, 1994, November 18, 1994, and November 23, 1994, respectively. The redesignation requests and maintenance plans meet the redesignation requirements in section 107(d)(3)(E) of the Act as amended in 1990. The redesignations meet the Federal requirements of section 182(a)(1) of the Clean Air Act as a revision to the Louisiana ozone State Implementation Plan for these areas. The EPA therefore approved the request for redesignation to attainment with respect to ozone for the areas of Beauregard, Grant, Lafayette, Lafourche, and St. Mary Parishes on October 17, 1995.

(b) Approval—The Louisiana Department of Environmental Quality (LDEQ) submitted a redesignation request and maintenance plan for St. James Parish on May 25, 1993. The EPA deemed this request complete on September 10, 1993. Several approvability issues existed, however. The LDEQ addressed these approvability issues in a supplemental ozone redesignation request and revised maintenance plan. This supplemental submittal was received for St. James Parish on December 15, 1994. The redesignation request and maintenance plan meet the redesignation requirements in section 107(d)(3)(E) of the Act as amended in 1990. The redesignation meets the Federal requirements of section 182(a)(1) of the Clean Air Act as a revision to the Louisiana ozone State Implementation Plan for this parish. The EPA therefore

approved the request for redesignation to attainment with respect to ozone for St. James Parish on November 13, 1995.

(c) Approval—The Louisiana Department of Environmental Quality (LDEQ) submitted a redesignation request and maintenance plan for the New Orleans CMSA on April 23, 1993. The EPA deemed this request complete on September 10, 1993. Several approvability issues existed, however. The LDEQ addressed these approvability issues in a supplemental ozone redesignation request and revised maintenance plan. This supplemental submittal was received on October 14, 1994. The redesignation request and maintenance plans meet the redesignation requirements in section 107(d)(3)(E) of the Act as amended in 1990. The redesignation meets the Federal requirements of section 182(a)(1) of the Clean Air Act as a revision to the Louisiana ozone State Implementation Plan for Jefferson, Orleans, St. Bernard, and St. Charles Parishes. The EPA therefore approved the request for redesignation to attainment with respect to ozone for 7Jefferson, Orleans, St. Bernard, and St. Charles Parishes on December 1, 1995.

[60 FR 43025, Aug. 18, 1995, as amended at 60 FR 47285, Sept. 12, 1995; 60 FR 51360, Oct. 2, 1995]

§ 52.976 Review of new sources and modification.

(a) Section 6.7 of Regulation 6.0 is disappoved since it could conflict with the preconstruction requirements for the prevention of significant deterioration (PSD) of air quality.

(b) Section 6.9 of Regulation 6.0 is disapproved since it could conflict with the preconstruction requirements for the prevention of significant deterioration (PSD) of air quality and the Administrator's Interpretative on Rule of December 21, 1976.

[44 FR 18491, Mar. 28, 1979, as amended at 47 FR 6017, Feb. 10, 1982]

§§ 52.977—52.985 [Reserved]

§ 52.986 Significant deterioration of air quality.

(a) The plan submitted by the Governor of Louisiana on August 14, 1984 (as adopted by the Secretary of Louisiana Department of Environmental Quality (LDEQ) on May 23, 1985), July 26, 1988 (as revised and adopted by the LDEQ on May 5, 1988), and October 26, 1990 (as revised and adopted by the LDEQ on July 20, 1990), LAC:33:III: § 509 Prevention of Significant Deterioration (PSD) and its Supplement documents, is approved as meeting the requirements of Part C, Clean Air Act for preventing significant deterioration of air quality.

(b) The requirements of Section 160 through 165 of the Clean Air Act are not met for Federally designated Indian lands since the plan (specifically LAC:33:III:509.A.1) excludes all Federally recognized Indian lands from the provisions of this regulation. Therefore, the provisions of § 52.21 (b) through (w) are hereby incorporated by reference and made a part of the applicable implementation plan, and are applicable to sources located on land under the control of Indian governing bodies.

[56 FR 20139, May 2, 1991]

§ 52.987 Control of hydrocarbon emissions.

(a) Notwithstanding any provisions to the contrary in the Louisiana Implementation Plan, the control measures listed in paragraphs (b) through (n) of this section shall be implemented in accordance with the schedule set forth below.

(b) Removal from service of a 10,000 barrel capacity crude oil storage tank at the Belcher Station of the Exxon Pipeline Company, Belcher, Louisiana, with a final compliance date of January 1, 1980. This shall result in an estimated hydrocarbon emission reduction of at least 208 tons per year.

(c) Removal from service of a 55,000 barrel capacity crude oil storage tank at the Weller Station of the Exxon Pipeline Company, near Minden, Louisiana, with a final compliance date of January 1, 1980. This shall result in an estimated hydrocarbon emission reduction of at least 263 tons per year.

(d) Installation of emission control systems on three 3,000 barrel capacity distillate storage tanks, at the Jones O'Brien Inc., Keatchie, Louisiana, with a final compliance date of January 1,

1978. This shall result in an estimated hydrocarbon emission reduction of at least 23 tons per year.

(e) Installation of emission control systems on crude oil storage tanks TK–43, TK–44, T–45 and T–49, and distillate tanks T–46 and T–50 at the Atlas Processing Company, Shreveport, Louisiana with a final compliance date of January 2, 1980. This shall result in an estimated hydrocarbon emission reduction of at least 881 tons per year.

(f) Installation of emission control systems on crude oil storage tanks TK–19–74, TK–HC–74, TK–571–74 and TK–15–74 and agreement to store only nonvolatile organic solvent in tanks TK–F2–74, TK–41–74 and TK–40–74 at the Cotton Valley Solvents Company, Cotton Valley, Louisiana with a final compliance date of January 2, 1980. This shall result in an estimated hydrocarbon emission reduction of at least 934 tons per year.

(g) Discontinue use of residue gas in pneumatic instrumentation and control systems at the Kerr-McGee Corporation, Devon Corporation, and Eason Oil Company, Calhoun Plant, Calhoun, Louisiana with a final compliance date of July 1, 1978. This shall result in an estimated hydrocarbon emission reduction of at least 21 tons per year.

(h) Discontinue use of residue gas in pneumatic instrumentation and control systems with a final compliance date of July 1, 1978, and install emission control systems on distillate storage tanks 2–7 and 2–13 with a final compliance date of January 2, 1980, at the Kerr-McGee Corp., Devon Corp., and Eason Oil Co., Dubach Plant, Dubach, Louisiana. This shall result in an estimated hydrocarbon reduction of at least 367 tons per year.

(i) Installation of emission control systems on a 37,500 barrel capacity crude oil storage tank at Cities Service Pipeline Company, Oil City, Louisiana with a final compliance date of February 1, 1980. This shall result in an estimated hydrocarbon emission reduction of at least 208 tons per year.

(j) Installation of emission control systems on a 25,000 barrel capacity crude oil storage tank at Cities Service Pipeline Company, Haynesville, Louisiana with a final compliance date of February 1, 1980. This shall result in an estimated hydrocarbon emission reduction of at least 28 tons per year.

(k) Installation of emission control systems on a 10,000 barrel capacity crude oil storage tank at Cities Service Pipeline Company, Summerfield, Louisiana with final compliance achieved in August 1977. This shall result in an estimated hydrocarbon emission reduction of at least 162 tons per year.

(l) Installation of emission control systems on a 30,000 barrel capacity crude oil storage tank at the Scurlock Oil Company, Lake End, Louisiana, with a final compliance date of January 15, 1980. This shall result in an estimated hydrocarbon emission reduction of at least 90 tons per year.

(m) Installation of emission control systems on a 55,000 barrel capacity crude oil storage tank at the Scurlock Oil Company, Dutchtown Oil Field near Minden, Louisiana, with a final compliance date of January 15, 1980. This shall result in an estimated hydrocarbon emission reduction of at least 186 tons per year.

(n) Installation of emission control systems on distillate storage tank No. 414 with a final compliance date of September 1, 1979, and the removal from service of tank No. 450 with final compliance achieved on December 1, 1977, at the Texas Eastern Products Pipeline Company, Sarepta, Louisiana. This shall result in an estimated hydrocarbon emission reduction of at least 355 tons per year.

[44 FR 15705, Mar. 15, 1979]

§ 52.988 [Reserved]

§ 52.990 Stack height regulations.

The State of Louisiana has committed to submit to EPA a SIP revision whenever a new or revised emission limitation for a specific source exceeds the height allowed by Section 921(A) ''Good Engineering Practice (GEP) Stack Height 1 or 2'' of the State regulations. A letter from the Secretary of Louisiana Department of Environmental Quality, dated September 23, 1986, stated that:

In specific, the State regulation, Section 17.14.2 [now LAC 33: Part III, Section 921(B)], provides that the degree of emission limitation required of any source for control of any

air pollutant must not be affected by so much of any source's stack height that exceeds good engineering practice or by any other dispersion technique. In reference to this requirement, the Louisiana Department of Environmental Quality or the Administrative Authority will submit to EPA a SIP revision whenever the Louisiana Department of Environmental Quality adopts a new or revised emission limitation for a specific source that is based on a stack height that exceeds the height allowed by Section 17.14.1(e)(1) [now LAC 33: Part III, Section 921(A) ''Good Engineering Practice (GEP) Stack Height 1''] or Section 17.14.1(e)(2) [now LAC 33: Part III, Section 921(A) ''Good Engineering Practice (GEP) Stack Height 2'']. [53 FR 36010, Sept. 16, 1988]

§ 52.991 Small business assistance program.

The Governor of Louisiana submitted on October 22, 1992, a plan revision to develop and implement a Small Business Stationary Source Technical and Environmental Compliance Assistance Program to meet the requirements of section 507 of the Clean Air Act by November 15, 1994. The plan commits to provide technical and compliance assistance to small businesses, hire an Ombudsman to serve as an independent advocate for small businesses, and establish a Compliance Advisory Panel to advise the program and report to EPA on the program's effectiveness.

[59 FR 32360, June 23, 1994]

§ 52.992 Area-wide nitrogen oxides exemptions.

(a) The Louisiana Department of Environmental Quality submitted to the EPA on August 5, 1994, a petition requesting that the nonclassifiable ozone nonattainment areas in the State of Louisiana be exempted from the requirement to meet the NO_X provisions of the Federal transportation conformity rule. The exemption request was based on monitoring data which demonstrated that the National Ambient Air Quality Standard for ozone had been attained in this area for the 3 years prior to the petition. The parishes for which the NO_X exemption was requested include: Beauregard, Grant, Lafayette, Lafourche, Jefferson, Orleans, St. Bernard, St. Charles, St. James, and St. Mary. The EPA approved this exemption request on March 2, 1995.

(b) The LDEQ submitted to the EPA on November 17, 1994, a petition requesting that the Baton Rouge serious ozone nonattainment area be exempted from the NO_X control requirements of the CAA. In addition, supplemental information was submitted to the EPA by the LDEQ on January 26, 1995, June 6, 1995, and June 16, 1995. The Baton Rouge nonattainment area consists of East Baton Rouge, West Baton Rouge, Pointe Coupee, Livingston, Iberville, and Ascension Parishes. The exemption request was based on photochemical grid modeling which shows that reductions in NO_X would not contribute to attainment in the nonattainment area. On January 18, 1996, the EPA approved the State's request for an areawide exemption from the following requirements: NO_X new source review, NO_X reasonably available control technology, NO_X general conformity, and NO_X inspection and maintenance requirements.

(c) The LDEQ submitted to the EPA on July 25, 1995, a revision to the SIP, pursuant to section 182(b)(1), requesting that the Baton Rouge serious ozone nonattainment area be exempted from the transportation conformity NO_X requirements of the CAA. The Baton Rouge nonattainment area consists of East Baton Rouge, West Baton Rouge, Pointe Coupee, Livingston, Iberville, and Ascension Parishes. The exemption request was based on photochemical grid modeling which shows that additional reductions in NO_X would not contribute to attainment in the nonattainment area. On February 12, 1996, the EPA approved the State's request for an areawide exemption from the transportation conformity NO_X requirements.

[60 FR 5864, Jan. 31, 1995, as amended at 61 FR 2446, Jan. 26, 1996; 61 FR 7221, Feb. 27, 1996]

§ 52.993 Emissions inventories.

(a) The Governor of the State of Louisiana submitted the 1990 base year emission inventories for the Baton Rouge (BTR) and Calcasieu Parish (CAL) ozone nonattainment areas on November 16, 1992 as a revision to the State Implementation Plan (SIP). The

1990 base year emission inventory requirement of section 182(a)(1) of the Clean Air Act, as amended in 1990, has been satisfied for each of these areas.

(b) The inventories are for the ozone precursors which are volatile organic compounds, nitrogen oxides, and carbon monoxide. The inventories cover point, area, non-road mobile, on-road mobile, and biogenic sources.

(c) The BTR nonattainment area is classified as Serious and includes Ascension, East Baton Rouge, Iberville, Livingston, Point Coupee, and West Baton Rouge Parishes; the CAL nonattainment area is classified as Marginal and includes Calcasieu Parish.

[60 FR 13911, Mar. 15, 1995]

§52.995 Enhanced ambient air quality monitoring.

(a) The Governor of the State of Louisiana submitted the photochemical assessment monitoring stations (PAMS) State Implementation Plan (SIP) revision for the Baton Rouge ozone nonattainment area on September 10, 1993. This SIP submittal satisfies 40 CFR 58.20(f), which requires the State to provide for the establishment and maintenance of PAMS.

(b) The Baton Rouge ozone nonattainment area is classified as Serious and includes Ascension, East Baton Rouge, Iberville, Livingston, Pointe Coupee, and West Baton Rouge Parishes.

[61 FR 31037, June 19, 1996]

EFFECTIVE DATE NOTE: At 61 FR 31037, June 19, 1996, §52.995 was added, effective Aug.19, 1996.

Subpart U—Maine

§52.1019 Identification of plan—conditional approval.

(a) The following plan revisions were submitted on the dates specified.

(1) On November 1, 1993 the Maine Department of Environmental Protection submitted a revision to the State Implementation Plan (SIP) for an enhanced Inspection and Maintenance (I/M) program in Androscoggin, Cumberland, Kennebec, Knox, Lincoln, Sagadahoc, and York counties. This submittal was supplemented by a letter dated May 26, 1994 describing additional changes Maine is making to the I/M program, and a commitment to provide additional material by July 22, 1994. On July 21, 1994, Maine submitted a revised submission. In these submissions, the State submitted adequate legal and regulatory authority to establish and implement an I/M program which meets the requirements of the Clean Air Act by September 1, 1995.

(i) Incorporation by reference.

(A) Letters from the Maine Department of Environmental Protection dated November 1, 1993, May 26, 1994 and July 21, 1994 submitting a revision to the Maine State Implementation Plan.

(B) The ''Motor Vehicle Emission Inspection Program'' regulation at Chapter 128 of the Department of Environmental Protection regulations effective June 28, 1994.

(C) Title 38, Chapter 28, Motor Vehicle Inspection Program, and Title 29, Section 102–C, Motor Vehicle Inspection Requirement for Vehicle Registration, which are state law citations authorizing the above regulation, both effective June 30, 1992 and revised effective October 13, 1993.

(ii) Additional materials. Nonregulatory, administrative portions of the November 1, 1993, May 26, 1994, and July 21, 1994 submissions to the Maine State Implementation Plan.

(b) [Reserved]

[59 FR 55053, Nov. 3, 1994]

§52.1020 Identification of plan.

(a) Title of plan: ''Implementation Plan for the Achievement of National Air Quality Standards.''

(b) The plan was officially submitted on January 28, 1972.

(c) The plan revisions listed below were submitted on the dates specified.

(1) Miscellaneous non-regulatory changes to the plan submitted on March 17, 1972, by the Environmental Improvement Commission for the State of Maine.

(2) Regulation 10.8.4(g) establishing compliance schedules for sources in Maine submitted on July 28, 1972, by the Environmental Improvement Commission for the State of Maine.

(3) A revision removing fuel burning sources with a maximum heat input from three million up to 10 million

BTU/hr from the particulate matter control strategy submitted on March 29, 1973, by the Governor.

(4) Changes in the Open Burning Regulation 100.2 submitted on September 4, 1973, by the State of Maine Department of Environmental Protection.

(5) An AQMA proposal submitted on June 26, 1974, by the Governor.

(6) Revision to incinerator particulate emission standard, submitted on August 26, 1976 by the Commissioner of the Maine Department of Environmental Protection, which would exempt woodwaste cone burners from the plan until 1980.

(7) Revision to incinerator particulate emission standard, submitted on November 18, 1976 by the Commissioner of the Maine Department of Environmental Protection, which would exempt municipal waste cone burners from the plan.

(8) Revision to open burning regulation submitted on December 7, 1976 by

the Commissioner of the Maine Department of Environmental Protection.

(9) Revisions to Chapter 5—*State Implementation Plan Air Quality Surveillance,* and Chapter 6—*Revision of New Sources and Modifications,* submitted by the Governor on March 10, 1978.

(10) Plans to meet various requirements of the Clean Air Act, including Part C, were submitted on May 1, 1979, October 26, 1979 and December 20, 1979. Included in the revisions is a plan for review of construction and operation of new and modified major stationary sources of pollution in attainment areas.

(11) Attainment plans to meet the requirements of Part D and the Clean Air Act, as amended in 1977, were submitted on May 1, 1979; October 26, 1979; December 20, 1979; July 9, 1980; July 31, 1980; December 18, 1980; March 17, 1981. Included are plans to attain: The secondary TSP standard for Augusta, Thomaston, Bangor and Brewer; the primary and secondary SO_2 standard for Millinocket; the carbon monoxide standard for Lewiston and Bangor and the ozone standard for AQCRS 107 and 110. A program was also submitted for the review of construction and operation of new and modified major stationary sources of pollution in non-attainment areas. Certain miscellaneous provisions are also included.

(12) A plan to provide for public involvement in federally funded air pollution control activities was submitted on May 28, 1980.

(13) Revisions to Chapter 5—State Implementation Plan—Air Quality Surveillance, intended to meet requirements of 40 CFR part 58, were submitted by the Commissioner of the Maine Department of Environmental Protection on July 1, 1980.

(14) Revisions to attain and maintain the NAAQS for lead were submitted on August 7, and November 5, 1980.

(15) A revision to Regulation 100.6 (Chapter 106) ''Low Sulfur Fuel Regulation'' for the Metropolitan Portland Air Quality Control Region, submitted by the Governor of Maine on August 25, 1977.

(16) Department Regulation Chapter 112, Petroleum Liquid Transfer Vapor Recovery, is amended to exempt the town of Searsport, Maine from this regulation. This amendment was submitted by Henry E. Warren, Commissioner of the Department of Environmental Protection on October 23, 1981, in order to meet Part D requirements for ozone.

(17) Regulatory revisions to the plan containing changes to Chapter 101 ''Visible Emissions Regulation'' submitted August 7, 1980.

(18) On May 12, 1982 and February 11, 1983 the Maine Department of Environmental Protection submitted an emission limit contained in an air emissions license which requires Pioneer Plastics, Auburn, Maine to reduce its volatile organic compound emissions by at least 85%.

(19) On January 11, 1983 and March 29, 1984 and December 4, 1984 the Maine Department of Environmental Protection submitted revisions to Chapter 103 ''Fuel Burning Equipment Particulate Emission Standard.''

(20) A plan to attain the primary TSP standard in Lincoln, consisting of particulate emission limitations contained in an air emission license issued to the Lincoln Pulp and Paper Company, Inc., submitted by the Commissioner of the Maine Department of Environmental Protection on December 18, 1984.

(21) A revision to approve the deletion of Thomaston from the list of applicable municipalities in Maine regulation 29 M.R.S.A. Chapter 113, submitted by the Commissioner on February 20, 1986.

(22) Revision to federally-approved regulation Chapter 112, Petroleum Liquids Transfer Vapor Recovery [originally approved on February 19, 1980, see paragraph (c)(11), of this section, was submitted on August 4, 1986, by the Department of Environmental Protection.

(i) Incorporation by reference.

(A) Regulation Chapter 112(6), Emission Testing, is amended by incorporating test methods and procedures as stated in 40 CFR part 60, subpart XX, § 60.503 to determine compliance with emission standards for volatile organic compound emissions from bulk gasoline terminals. This revision to Regulation Chapter 112(6) became effective on July 22, 1986 in the State of Maine.

(ii) Additional material. The non-regulatory portions of the state submittals.

(23) [Reserved]

(24) Revisions to the State Implementation Plan submitted by the Maine Department of Environmental Protection on August 22, 1988.

(i) Incorporation by reference.

(A) Letter from the Maine Department of Environmental Protection dated August 19, 1988 submitting a revision to the Maine State Implementation Plan.

(B) Chapter 117 of the Maine Department of Environmental Protection Air Regulations entitled, ''Source Surveillance,'' effective in the State of Maine on August 9, 1988.

(ii) Additional material.

(A) Nonregulatory portions of the state submittal.

(25) Revisions to the Maine State Implementation Plan (SIP) for ozone submitted on February 14, 1989 and May 3, 1989 by the Maine Department of Environmental Protection (DEP) for its state gasoline volatility control program, including any waivers under the program that Maine may grant. The control period will begin May 1, 1990.

(i) Incorporation by reference. Maine Department Regulation chapter 119, Rules and Regulations of the State of Maine, entitled ''Motor Vehicle Fuel Volatility Limit,'' adopted August 10, 1988, amended Septemter 27, 1989 and effective October 25, 1989.

(26) Revisions to the State Implementation Plan submitted by the Maine Department of Environmental Protection on October 27, 1989.

(i) Incorporation by reference.

(A) Letter from the Maine Department of Environmental Protection dated October 27, 1989 submitting revisions to the Maine State Implementation Plan.

(B) Chapter 100 of the Maine Department of Environmental Protection's Air Regulations entitled ''Definitions Regulations,'' except for the definition of volatile organic compounds in Chapter 100(76) which is being incorporated by reference in 40 CFR 52.1020(c)(27). This regulation was effective in the State of Maine on October 3, 1989. Note, the definition of fuel burning equipment in Chapter 100(29) is not part of Maine's submittal.

(C) Chapter 110 except for Chapter 110(2) which is being incorporated by reference in 40 CFR 52.1020(c)(27), Chapter 113, Chapter 114 except for Chapter 114(II) and (III) which are being incorporated by reference in 40 CFR 52.1020(c)(27), Chapter 115, and Chapter 116 of the Maine Department of Environmental Protection's Air Regulations entitled, ''Ambient Air Quality Standards,'' ''Growth Offset Regulation,'' ''Classification of Air Quality Control Regions,'' ''Emission License Regulations,'' and ''Prohibited Dispersion Techniques,'' respectively. These regulations were effective in the State of Maine on October 25, 1989. Chapter 108, originally approved on January 30, 1980 and February 19, 1980 in paragraphs (c)(10) and (c)(11) of this section, is being withdrawn and replaced with Chapter 115.

(D) Portions of Chapter 1 entitled ''Regulations for the Processing of Applications,'' effective in the State of Maine on February 8, 1984.

(ii) Additional materials.

(A) A State Implementation Plan narrative contained in Chapter 6 entitled ''Review of New Sources and Modifications.''

(B) Letter dated May 1, 1989 from the Maine Department of Environmental Protection regarding implementation of BACT.

(C) Nonregulatory portions of the state submittal.

(27) Revisions to the State Implementation Plan submitted by the Maine Department of Environmental Protection on October 31, 1989.

(i) Incorporation by reference.

(A) Letter from the Maine Department of Environmental Protection dated October 31, 1989 submitting revisions to the Maine State Implementation Plan.

(B) The definition of volatile organic compounds in Chapter 100(76) of the Maine Department of Environmental Protection's ''Definitions Regulations'' effective in the State of Maine on October 3, 1989.

(C) Chapter 110(2) and Chapter 114 (II) and (III) of the Maine Department of Environmental Protection's ''Ambient Air Quality Standards'' and ''Classification of Air Quality Control Regions'' Regulations effective in the State of Maine on October 25, 1989.

Note that Millinocket remains designated as a nonattainment area for SO_2 until redesignated at 40 CFR 51.320.

(ii) Additional materials.

(A) A State Implementation Plan narrative contained in Chapter 6 entitled ''Review of New Sources and Modifications.''

(B) Nonregulatory portions of the state submittal.

(28) Revisions to the State Implementation Plan submitted by the Maine Department of Environmental Protection on August 14 and October 22, 1991.

(i) Incorporation by reference.

(A) Letters from the Maine Department of Environmental Protection dated August 14 and October 22, 1991 submitting revisions to the Maine State Implementation Plan.

(B) Revisions to Chapter 109 of the Maine Department of Environmental Protection Regulations, ''Emergency Episode Regulations,'' effective in the State of Maine on September 16, 1991.

(C) Part B of the Memorandum of Understanding which the Maine Department of Environmental Protection (DEP) entered into (and effective) on March 11, 1991, with the City of Presque Isle, and the Maine Department of Transportation.

(ii) Additional materials.

(A) An attainment plan and demonstration which outlines Maine's control strategy for attainment of the PM10 NAAQS and implements and meets RACM and RACT requirements for Presque Isle.

(B) Nonregulatory portions of the submittal.

(29) Revisions to the State Implementation Plan submitted by the Maine Department of Environmental Protection on July 16, 1990, September 5, 1990, and November 2, 1990.

(i) Incorporation by reference.

(A) Letters from the Maine Department of Environmental Protection dated July 16, 1990, September 5, 1990, and November 2, 1990, submitting revisions to the Maine State Implementation Plan.

(B) The definitions of actual emissions, baseline concentration, and fuel burning equipment in Chapter 100(1), 100(9), and 100(29) of Maine's ''Definitions Regulation,'' Chapter 110(10) (except for Chapter 110(10)(C)(3)) of Maine's ''Ambient Air Quality Standards Regulation,'' Chapter 113(II)(A) of Maine's ''Growth Offset Regulation,'' and Chapter 115(I)(B), (VII)(A), (VII)(B)(3), and (VII)(D)(3) of Maine's ''Emission License Regulations,'' effective in the State of Maine on July 10, 1990. Note that the revised state statute which contains the underlying authority to implement the NO_2 increments became effective on July 14, 1990.

(ii) Additional materials.

(A) A state implementation plan narrative contained in Chapter 6 entitled ''Review of New Sources and Modifications.''

(B) Nonregulatory portions of the state submittal.

(30) Revisions to the State Implementation Plan submitted by the Maine Department of Environmental Protection on September 29, 1989, December 5, 1989 and June 3, 1991.

(i) Incorporation by reference.

(A) Letters from the Maine Department of Environmental Protection dated September 29, 1989, and June 3, 1991 submitting a revision to the Maine State Implementation Plan.

(B) Chapter 111 ''Petroleum Liquid Storage Vapor Control'' and Chapter 123 ''Paper Coater Regulation,'' effective in the state of Maine on October 3, 1989.

(C) Chapter 112 ''Petroleum Liquid Transfer Vapor Recovery,'' effective in the State of Maine on June 9, 1991.

(ii) Additional materials.

(A) Letter from the Maine Department of Environmental Protection dated June 3, 1991 documenting the December 1990 survey conducted to satisfy the 5 percent demonstration requirement in order to justify the 3500 gallon capacity cut-off in chapter 112.

(B) Letter from the Maine Department of Environmental Protection dated December 5, 1989 requesting the withdrawal of operating permits for S.D. Warren of Westbrook, Eastern Fine Paper of Brewer, and Pioneer Plastics of Auburn incorporated by reference at 40 CFR 52.1020 (c)(11) and (c)(18).

(C) Nonregulatory portions of the submittal.

(31) Revisions to the State Implementation Plan submitted by the Maine

Department of Environmental Protection on April 20, 1992.

(i) Incorporation by reference.

(A) Letter from the Maine Department of Environmental Protection dated April 8, 1992 submitting a revision to the Maine State Implementation Plan.

(B) Chapter 100(54)(b) ''particulate matter emissions,'' Chapter 100(57)(b) ''PM_{10} emissions,'' and revisions to Chapter 100(28) ''federally enforceable'' and to Chapter 100(76) ''volatile organic compound (VOC)'' effective in the State of Maine on January 18, 1992.

(ii) Additional materials.

(A) Nonregulatory portions of the submittal.

(32) Revisions to the State Implementation Plan submitted by the Maine Department of Environmental Protection on June 5, 1991.

(i) Incorporation by reference.

(A) Letter from the Maine Department of Environmental Protection dated June 3, 1991 submitting a revision to the Maine State Implementation Plan.

(B) Chapter 126 of the Maine Department of Environmental Protection Regulations, ''Capture Efficiency Test Procedures'' effective in the State of Maine on June 9, 1991.

(ii) Additional materials.

(A) Nonregulatory portions of the submittal.

(33) Revisions to the State Implementation Plan submitted by the Maine Department of Environmental Protection on January 8, 1993.

(i) Incorporation by reference.

(A) Letter from the Maine Department of Environmental Protection dated January 8, 1993, submitting a revision to the Maine State Implementation Plan.

(B) Revised Chapter 100 of the Maine Department of Environmental Protection Regulations, ''Definitions'' effective in the State of Maine on February 10, 1993.

(C) Chapter 129 of the Maine Department of Environmental Protection Regulations, ''Surface Coating Facilities'' effective in the State of Maine on February 10, 1993.

(D) Chapter 130 of the Maine Department of Environmental Protection Regulations, ''Solvent Degreasers'' effective in the State of Maine on February 10, 1993.

(E) Chapter 131 of the Maine Department of Environmental Protection Regulations, ''Cutback and Emulsified Asphalt'' effective in the State of Maine on February 10, 1993.

(F) Chapter 132 of the Maine Department of Environmental Protection Regulations, ''Graphic Arts—Rotogravure and Flexography'' effective in the State of Maine on February 10, 1993.

(G) Appendix A ''Volatile Organic Compounds Test Methods and Compliance Procedures'' incorporated into Chapters 129 and 132 of the Maine Department of Environmental Protection Regulations, effective in the State of Maine on February 10, 1993.

(ii) Additional materials.

(A) Nonregulatory portions of the submittal.

(34) Revisions to the State Implementation Plan submitted by the Maine Department of Environmental Protection on January 3, 1994.

(i) Incorporation by reference.

(A) Letter from the Maine Department of Environmental Protection dated January 3, 1994 submitting a revision to the Maine State Implementation Plan.

(B) Revised Chapter 100 of the Maine Department of Environmental Protection Regulations, ''Definitions'' effective in the State of Maine on December 12, 1993.

(C) Chapter 137 of the Maine Department of Environmental Protection Regulations, ''Emission Statements'' effective in the State of Maine on December 12, 1993.

(ii) Additional Information.

(A) Nonregulatory portions of the submittal.

(35) Revisions to the State Implementation Plan submitted by the Maine Department of Environmental Protection on June 3, 1991, November 25, 1991, and July 6, 1994.

(i) Incorporation by reference.

(A) Letters from the Maine Department of Environmental Protection dated June 3, 1991, November 25, 1991, and July 6, 1994 submitting a revision to the Maine State Implementation Plan.

(B) Chapter 120 of the Maine Department of Environmental Protection Regulations, ''Gasoline Tank Truck Tightness Self-Certification,'' effective in the State of Maine on July 11, 1994.

(ii) Additional materials.

(A) Nonregulatory portions of the submittal.

(36) Revisions to the State Implementation Plan submitted by the Maine Department of Environmental Protection on July 6, 1994.

(i) Incorporation by reference.

(A) Letter from the Maine Department of Environmental Protection dated July 6, 1994 submitting a revision to the Maine State Implementation Plan.

(B) Chapter 100 of the Maine Department of Environmental Protection Regulations, ''Definitions,'' effective in the State of Maine on July 11, 1994, with the exception of the definitions of the following terms: ''curtailment,'' ''federally enforceable,'' ''major modification,'' '' major source,'' ''nonattainment pollutant,'' ''shutdown,'' ''significant emissions,'' and ''significant emissions increase.''

(C) Chapter 112 of the Maine Department of Environmental Protection Regulations, ''Petroleum Liquids Transfer Vapor Recovery,'' effective in the State of Maine on July 11, 1994.

(D) Chapter 118 of the Maine Department of Environmental Protection Regulations, ''Gasoline Dispensing Facilities Vapor Control,'' effective in the State of Maine on July 11, 1994.

(E) Chapter 133 of the Maine Department of Environmental Protection Regulations, ''Petroleum Liquids Transfer Vapor Recovery at Bulk Gasoline Plants,'' effective in the State of Maine on July 11, 1994.

(ii) Additional materials.

(A) Nonregulatory portions of the submittal.

(37) Revisions to the State Implementation Plan submitted by the Maine Department of Environmental Protection on July 12, 1994.

(i) Incorporation by reference.

(A) Letter from the Maine Department of Environmental Protection dated July 5, 1994 submitting a revision to the Maine State Implementation Plan.

(B) Maine's Chapter 100 entitled, ''Definition Regulations.'' This regulation was effective in the State of Maine on July 11, 1994.

(C) Maine's Chapter 113 entitled, ''Growth Offset Regulation.'' This regulation was effective in the State of Maine on July 11, 1994.

(D) Maine's Chapter 115 entitled, ''Emission License Regulation,'' except for Section 115(VII)(E) of this Chapter and all references to this Section. This regulation was effective in the State of Maine on July 11, 1994.

(ii) Additional materials.

(A) Nonregulatory portions of the State submittal.

(38) Revisions to the State Implementation Plan establishing a Small Business Stationary Source Technical and Environmental Compliance Assistance Program were submitted by the Maine Department of Environmental Protection on July 7, and August 16, 1994.

(i) Incorporation by reference.

(A) Letter from the Maine Department of Environmental Protection dated July 7, 1994 submitting a revision to the Maine State Implementation Plan.

(B) Revisions to the State Implementation Plan for the Small Business Stationary Source Technical and Environmental Compliance Assistance Program dated July 12, 1994 and effective on May 11, 1994.

(C) Letter from the Maine Department of Environmental Protection dated August 16, 1994 submitting a corrected page to the July 12, 1994 SIP revision.

(39) [Reserved]

(40) Revisions to the State Implementation Plan submitted by the Maine Department of Environmental Protection on June 1, 1994.

(i) Incorporation by reference.

(A) Letter from the Maine Department of Environmental Protection dated June 1, 1994 submitting revisions to the Maine State Implementation Plan.

(B) Revisions to Chapter 114 of the Maine Department of Environmental Protection Regulations, ''Classification of Air Quality Control Regions,'' adopted by the Board of Environmental

Protection on April 27, 1994 and accepted by the Secretary of State with an effective date of May 9, 1994.

(C) Revisions to Part B of the Memorandum of Understanding which the Maine Department of Environmental Protection (DEP) entered into (and effective) on May 25, 1994, with the City of Presque Isle, and the Maine Department of Transportation.

(ii) Additional materials.

(A) A maintenance demonstration and contingency plan which outline Maine's control strategy for maintenance of the PM_{10} NAAQS and contingency measures and provision for Presque Isle.

(B) Nonregulatory portions of the submittal.

(41) Revisions to the State Implementation Plan submitted by the Maine Department of Environmental Protection on August 5, 1994 related to NO_X controls in Oxford, Franklin, Somerset, Piscataquis, Penobscot, Washington, Aroostook, Hancock and Waldo Counties.

(i) Incorporation by reference.

(A) A Letter from the Maine Department of Environmental Protection dated August 5, 1994 submitting a revision to the Maine State Implementation Plan.

(B) Chapter 138 of the Maine DEP's regulations, ''Reasonably Available Control Technology for Facilities that Emit Nitrogen Oxides'' for sources only in Oxford, Franklin, Somerset, Piscataquis, Penobscot, Washington, Aroostook, Hancock and Waldo Counties (excepted portions include Sections 1.A.1. and 3.B.). This rule was effective August 3, 1994.

[37 FR 10870, May 31, 1972]

EDITORIAL NOTE: For FEDERAL REGISTER citations affecting § 52.1020, see the List of CFR Sections Affected in the Finding Aids section of this volume.

§ 52.1021 Classification of regions.

The Maine plan was evaluated on the basis of the following classifications:

Air quality control region	Pollutant				
	Particulate matter	Sulfur oxides	Nitrogen dioxide	Carbon monoxide	Ozone
Metropolitan Portland Intrastate	I	II	III	III	III
Androscoggin Valley Interstate	IA	IA	III	III	III
Down East Intrastate	IA	IA	III	III	III
Aroostook Intrastate	III	III	III	III	III
Northwest Maine Intrastate	III	III	III	III	III

[37 FR 10870, May 31, 1972, as amended at 45 FR 10774, Feb. 19, 1980]

§ 52.1022 Approval status.

With the exceptions set forth in this subpart, the Administrator approves Maine's plan, as identified in § 52.1020, for the attainment and maintenance of the national standards under section 110 of the Clean Air Act.

[45 FR 10774, Feb. 19, 1980, as amended at 60 FR 33734, June 29, 1995]

§ 52.1023 Control strategy: Ozone.

(a) *Determination.* EPA is determining that, as of July 21, 1995, the Lewiston-Auburn ozone nonattainment area has attained the ozone standard and that the reasonable further progress and attainment demonstration requirements of section 182(b)(1) and related requirements of section 172(c)(9) of the Clean Air Act do not apply to the area for so long as the area does not monitor any violations of the ozone standard. If a violation of the ozone NAAQS is monitored in the Lewiston-Auburn ozone nonattainment area, these determinations shall no longer apply.

(b) *Determination.* EPA is determining that, as of July 21, 1995, the Knox and Lincoln Counties ozone nonattainment area has attained the ozone standard and that the reasonable further progress and attainment demonstration requirements of section 182(b)(1) and related requirements of section 172(c)(9) of the Clean Air Act do not apply to the area for so long as the area does not monitor any violations of the ozone standard. If a violation of the

ozone NAAQS is monitored in the Knox and Lincoln Counties ozone nonattainment area, these determinations shall no longer apply.

(c) *Approval.* EPA is approving an exemption request submitted by the Maine Department of Environmental Protection on September 7, 1995, for the Northern Maine area from the NO_X requirements contained in Section 182(f) of the Clean Air Act. This approval exempts Oxford, Franklin, Somerset, Piscataquis, Penobscot, Washington, Aroostook, Hancock and Waldo Counties from the requirements to implement controls beyond those approved in §52.1020(c)(41) for major sources of nitrogen oxides (NO_X), nonattainment area new source review (NSR) for new sources and modifications that are major for NO_X, and the applicable NO_X-related requirements of the general and transportation conformity provisions.

[60 FR 29766, June 6, 1995, as amended at 60 FR 66755, Dec. 26, 1995]

§52.1024 Attainment dates for national standards.

The following table presents the latest dates by which the national standards are to be attained.

ATTAINMENT DATES ESTABLISHED BY CLEAN AIR ACT OF 1990

Air quality control region and nonattainment area	Pollutant					
	SO_2		PM–10	NO_2	CO	O_3
	Primary	Secondary				
AQCR 107:						
Androscoggin County	(a)	(b)	(a)	(a)	(a)	(g)
Kennebec County	(a)	(b)	(a)	(a)	(a)	(g)
Knox County	(a)	(b)	(a)	(a)	(a)	(g)
Lincoln County	(a)	(b)	(a)	(a)	(a)	(g)
Waldo County	(a)	(b)	(a)	(a)	(a)	(d)
Oxford Cnty. (Part) See 40 CFR 81.320	(a)	(b)	(a)	(a)	(a)	(e)
Franklin Cnty. (Part) See 40 CFR 81.320	(a)	(b)	(a)	(a)	(a)	(e)
Somerset Cnty. (Part) See 40 CFR 81.320	(a)	(b)	(a)	(a)	(a)	(e)
AQCR 108:						
Aroostook Cnty. (Part) See 40 CFR 81.320	(a)	(b)	(c)	(a)	(a)	(a)
Remainder of AQCR	(a)	(b)	(a)	(a)	(a)	(a)
AQCR 109:						
Hancock County	(a)	(b)	(a)	(a)	(a)	(d)
Millinocket	(e)	(e)	(a)	(a)	(a)	(a)
Remainder of AQCR	(a)	(b)	(a)	(a)	(a)	(a)
AQCR 110:						
York County	(a)	(b)	(a)	(a)	(a)	(g)
Cumberland County	(a)	(b)	(a)	(a)	(a)	(g)
Sagadahoc County	(a)	(b)	(a)	(a)	(a)	(g)
Oxford Cnty. (Part) See 40 CFR 81.320	(a)	(b)	(a)	(a)	(a)	(e)
AQCR 111	(a)	(b)	(a)	(a)	(a)	(a)

[a] Air quality levels presently below primary standards or area is unclassifiable.
[b] Air quality levels presently below secondary standards or area is unclassifiable.
[c] 12/31/94.
[d] 11/15/94 (one-year extension granted).
[e] 11/15/95.
[g] 11/15/96.

[60 FR 33352, June 28, 1995]

§52.1025 Control strategy: Particulate matter.

(a) The revisions to the control strategy resulting from the modification to the emission limitations applicable to the sources listed below or resulting from the change in the compliance date for such sources with the applicable emission limitation is hereby approved. All regulations cited are air pollution control regulations of the State unless otherwise noted. (See §52.1023 for compliance schedule approvals and disapprovals pertaining to one or more of the sources below.)

Source	Location	Regulation involved	Date of adoption
All sources subject to Regulation 100.3.1(b) with a maximum heat input from three million up to but not including ten million Btu per hour.	Maine	100.3.1(b)	3/29/73

(b) The revision to the incinerator particulate emission standard submitted on August 26, 1976 is disapproved because of provisions therein which would interfere with the attainment and maintenance of national ambient air quality standards.

(c) The revision to the incinerator particulate emission standard submitted on November 18, 1976 is disapproved because of provisions therein which would interfere with the attainment and maintenance of national ambient air quality standards.

(d) The revision to the open burning regulation submitted on December 7, 1976 is disapproved because of provisions therein which would interfere with the attainment and maintenance of national ambient air quality standards.

[38 FR 22474, Aug. 21, 1973, as amended at 43 FR 14964, Apr. 10, 1978; 43 FR 15424, Apr. 13, 1978; 47 FR 6830, Feb. 17, 1982]

§52.1026 Review of new sources and modifications.

The program to review operation and construction of new and modified major stationary sources in non-attainment areas is approved as meeting the requirements of part D as amended by the CAAA of 1990.

[45 FR 10775, Feb. 19, 1980, as amended at 61 FR 5694, Feb. 14, 1996]

§52.1027 Rules and regulations.

(a) *Part D—Conditional Approval.*

(b) *Non-Part D—No Action.* EPA is neither approving nor disapproving the following elements of the revisions identified in §52.1020(C)(10):

(1) Intergovernmental consultation.

(2) Interstate pollution notification requirements.

(3) Public notification requirements.

(4) Conflict of Interest requirements.

(5) Permit fees.

[45 FR 10775, Feb. 19, 1980, as amended at 45 FR 59314, Sept. 9, 1980]

§52.1028 [Reserved]

§52.1029 Significant deterioration of air quality.

The program to review operation and construction of new and modified major stationary sources in attainment areas is approved as meeting the requirements of Part C.

[45 FR 6786, Jan. 30, 1980]

§52.1030 Control strategy: Sulfur oxides.

(a) The revision to Regulation 100.6 (Chapter 106) ''Low Sulfur Fuel Regulation'' for the Metropolitan Portland Air Quality Control Region, submitted by the Governor of Maine on August 25, 1977, is approved with the exception of paragraph 100.6.5(b) which allows the Commissioner of the Department of Environmental Protection to grant variances to Regulation 100.6.

[47 FR 948, Jan. 8, 1982]

§52.1031 EPA-approved Maine regulations.

The following table identifies the State regulations which have been submitted to and approved by EPA as revisions to the Maine State Implementation Plan. This table is for informational purposes only and does not have any independent regulatory effect. To determine regulatory requirements for

a specific situation consult the plan identified in § 52.1020. To the extent that this table conflicts with §§ 52.1020, 52.1020 governs.

TABLE 52.1031—EPA-APPROVED RULES AND REGULATIONS

State citation	Title/Subject	Date adopted by State	Date approved by EPA	Federal Register citation	52.1020	
Chapter:						
1	Regulations for the Processing of Applications..	02/08/84	03/23/93	58 FR 15430	(c)(26)	Portions of chapter 1.
100		5/7/79	1/3/80	45 FR 6784	(c)(10)	PSD Plan Only.
100	Definitions Regulations.	12/24/79 2/6/80	2/19/80	45 FR 10766	(c)(11)	
100	Definitions.	10/3/89	3/23/93	58 FR 15430	(c)(26)	All except for the definition of VOC in chapter 100(76). Note that this definition is approved in another paragraph below. In addition, Maine withdrew the definition of fuel burning equipment in chapter 100(29) from its SIP submittal. This definition is approved in another paragraph below.
					(c)(27)	Approval of definition of VOC in chapter 100(76) only.
100	Definitions Regulations.	11/26/91	6/21/93	58 FR 33768	(c)(31)	Revised ''volatile organic compound (VOC)'' and ''federally enforceable.'' Added ''particulate matter emissions'' and ''PM_{10} emissions.''
100	Definitions	7/10/90	3/18/94	59 FR 12855	(c)(29)	Changes to the following definitions: Actual emissions, baseline concentration and fuel burning equipment in Chapter 100(1), (9), and (29).
100	Definitions	1/6/93	6/17/94	59 FR 31157	(c)(33)	Revised to add definitions associated with VOC RACT rules.
100	Definitions	11/10/93	1/10/95	60 FR 2526	(c)(34)	Revised to add definitions associated with emission statement rules.
100	Definitions	6/22/94	6/29/95	60 FR 33734	36	Gasoline marketing definitions added
100	Definitions Regulation	6/22/94	2/14/96	61 FR 5694	(c)(37)	Addition of 1990 Part D NSR and other CAAA requirements.
101	Visible Emissions	10/10/79	2/17/82	47 FR 6829	(c)(17)	
102	Open Burning	1/31/72	5/31/72	37 FR 10842	(b)	
103	Fuel Burning Equipment Particulate Emission Standard.	1/31/72	5/31/72	37 FR 10842	(b)	
		1/24/83	2/26/85	50 FR 7770	(c)(19)	
104	Incinerator Particulate Emission Standard.	1/31/72	5/31/72	37 FR 10842	(b)	
105	General Process Source Particulate Emission Standard.	1/31/72	5/31/72	37 FR 10842	(b)	
106	Low Sulfur Fuel	1/31/72	5/31/72	37 FR 10842	(b)	
		2/08/78	1/8/82	47 FR 947	(c)(15)	Revised limits for Portland Peninsula only.
107	Sulfur Dioxide Emission Standards for Sulfite Pulp Mills.	1/31/72	5/31/72	37 FR 10842	(b)	
109	Emergency Episode Regulation.	1/31/72	5/31/72	37 FR 10842	(b)	
109	Emergency Episode Regulation.	8/14/91	1/12/95	60 FR 2887	(c)(28)	Revisions which incorporate the PM10 alert, warning, and emergency levels.

TABLE 52.1031—EPA-APPROVED RULES AND REGULATIONS—Continued

State citation	Title/Subject	Date adopted by State	Date approved by EPA	Federal Register citation	52.1020	
110	Ambient Air Quality Standards.	5/7/79	1/30/80	45 FR 6784	(c)(10)	
110	Ambient Air Quality Standards.	10/25/89	3/23/93	58 FR 15430	(c)(26)	All of chapter 110 except for chapter 110(2) which is approved in another paragraph, below. Note that Maine did not submit its Chromium standard in chapter 110(12) for approval.
	.....	.....	.....	.....	(c)(27)	Chapter 110(2) only.
110	Ambient Air Quality Standards.	7/10/90	3/18/94	59 FR 12855	(c)(29)	Addition of NO_2 increments for class I and II areas in Chapter 110(10). Note that class III increment in Chapter 110(10)(C)(3) is not part of submittal.
111	Petroleum Liquid Storage Vapor Control.	5/7/79	2/19/80	45 FR 10766	(c)(11)	
		9/27/89	2/3/92	57 FR 3948	(c)(30)	
112	Petroleum Liquids Transfer Recovery.		2/19/80	45 FR 10766	(c)(11).	
		5/7/79	3/5/82	47 FR 9462	(c)(16)	Irving Oil, Searsport exempted.
		7/22/86	2/2/87	52 FR 3117	(c)(22)	Bulk Gasoline Terminal Test methods.
		5/22/91	2/3/92	57 FR 3948	(c)(30)	The exemption for Irving Oil Corporation in Searsport, Maine incorporated by reference at 40 CFR 52.1020(c)(16) is removed.
112	Petroleum liquids transfer recover.	6/22/94	6/29/95	60 FR 33734	36	Deleted exemption for tank trucks less than 3500 gallons
113	Growth Offset Regulation.	5/7/79	2/19/80	45 FR 10766	(c)(11)	Part of New Source Review program.
		12/18/85	12/23/86	51 FR 45886	(c)(21)	Deletes Thomaston.
113	Growth Offset Regulation.	10/25/89	3/23/93	58 FR 15430	(c)(26)	
113	Growth Offset Regulation.	7/10/90	3/18/94	59 FR 12855	(c)(29)	Change to Chapter 113(II)(A) to include NO_2.
113	Growth Offset Regulation.	6/22/94	2/14/96	61 FR 5694	(c)(37)	Addition of 1990 Part D NSR requirements.
114	Classification of Air Quality Control Regions.	5/7/79	1/30/80	45 FR 6874	(c)(10)	
114	Designation of Air Quality Control Regions.	10/25/89	3/23/93	58 FR 15430	(c)(26)	All except for chapter 114(11) and (111) which are approved in another paragraph below.
	.....	.....	.....	.....	(c)(27)	Chapter 114(11)and (111) only.
114	Classification of Air Quality Control Regions.	4/27/94	Aug. 30, 1995	60 FR 45060	(c)(40)	Revision to remove Presque Isle as nonattainment for PM_{10}.
115	Emission License Regulation..	5/7/79	1/30/80	45 FR 6784	(c)(10)	PSD
	.....	12/24/79	2/19/80	45 FR 10766	(c)(11)	New Source Review.
	.....	10/25/89	3/23/93	58 FR 15430	(c)(26)	Note Maine did not submit references to nonregulated pollutants for approval. Also note that this chapter was formerly chapter 108.
115	Emission License Regulation.	7/10/90	3/18/94	59 FR 12855	(c)(29)	Changes to Chapter 115(I)(B), (VII)(A), VII)(B)(3), and (VII)(D)(3) to remove Chapter 108 and to incorporate NO_2 increments requirements.

TABLE 52.1031—EPA-APPROVED RULES AND REGULATIONS—Continued

State citation	Title/Subject	Date adopted by State	Date approved by EPA	Federal Register citation	52.1020	
115	Emission License Regulation.	6/22/94	2/14/96	61 FR 5694	(c)(37)	Addition of 1990 Part D NSR and other CAAA requirements.
116	Prohibited Dispersion Techniques..	10/25/89	3/23/93	58 FR 15430	(c)(26)	
117	Source Surveillance	8/9/88	3/21/89	54 FR 11525	24.	
118	Gasoline Dispensing Facilities.	6/22/94	6/29/95	60 FR 33734	36	
119	Motor Vehicle Fuel Volatility Limit.	9/27/89	5/3/90	55 FR 20603	(c)(25)	
120	Gasoline Tank Trucks	6/22/94	6/29/95	60 FR 33734	35	
123	Paper Coater Regulation.	9/27/89	2/3/92	57 FR 3949	(c)(30)	The operating permits for S.D. Warren of Westbrook, Eastern Fine Paper of Brewer, and Pioneer Plastics of Auburn incorporated by reference at 40 CFR § 52.1020 (c)(11), (c)(11), and (c)(18), respectively, are withdrawn.
126	Capture Efficiency Test Procedures.	5/22/91	3/22/93	58 FR 15282	(c)(32).	
129	Surface coating Facilities.	1/6/93	6/17/94	59 FR 31157	(c)(33)	Includes surface coating of: Cans, fabric, vinyl, metal furniture, flatwood paneling, and miscellaneous metal parts and products.
130	Solvent Degreasers	1/6/93	6/17/94	59 FR 31157	(c)(33).	
131	Cutback and Emulsified Asphalt.	1/6/93	6/17/94	59 FR 31157	(c)(33).	
132	Graphic Arts: Rotogravure and Flexography.	1/6/93	6/17/94	59 FR 31157	(c)(33).	
133	Gasoline Bulk Plants	6/22/94	6/29/95	60 FR 33734	36	
137	Emission Statements	11/10/93	1/10/95	60 FR 2526	(c)(34)	
138	Reasonably Available Control Technology For Facilities That Emit Nitrogen Oxides.	8/3/94	December 26, 1995	60 FR 66755	(c)(41)	Affects sources only in Oxford, Franklin, Somerset, Piscataquis, Penobscot, Washington, Aroostook, Hancock and Waldo Counties (excepted portions of rule include Sections 1.A.1. and 3.B.).

NOTE.—1. The regulations are effective statewide unless stated otherwise in comments section.

(Secs. 110(a) and 301(a) of the Clean Air Act, as amended (42 U.S.C. 7410(a) and 7601(a)))

[50 FR 3336, Jan. 24, 1985, as amended at 50 FR 7770, Feb. 26, 1985; 51 FR 45886, Dec. 23, 1986; 52 FR 3117, Feb. 2, 1987; 54 FR 11525, Mar. 21, 1989; 55 FR 20603, May 18, 1990; 57 FR 3948, Feb. 3, 1992; 58 FR 15282, Mar. 22, 1993; 58 FR 15430, Mar. 23, 1993; 58 FR 33768, June 21, 1993; 59 FR 12855, Mar. 18, 1994; 59 FR 31157, June 17, 1994; 60 FR 2526, Jan. 10, 1995; 60 FR 2887, Jan. 12, 1995; 60 FR 33734, June 29, 1995; 60 FR 45059, Aug. 30, 1995; 60 FR 66755, Dec. 26, 1995; 61 FR 5694, Feb. 14, 1996]

§ 52.1033 Visibility protection.

(a) The requirements of section 169A of the Clean Air Act are not met because the plan does not include approvable procedures for meeting all of the requirements of 40 CFR 51.302 or 51.306 for the protection of visibility in mandatory class I Federal areas.

(b) [Reserved]

(c) *Long-term strategy*. The provisions of § 52.29 are hereby incorporated into the applicable plan for the State of Maine.

[52 FR 45138, Nov. 24, 1987, as amended at 58 FR 15431, Mar. 23, 1993]

§ 52.1034 Stack height review.

The State of Maine has declared to the satisfaction of EPA that no existing emission limitations have been affected by stack height credits greater than good engineering practice or any other prohibited dispersion techniques as defined in EPA's stack height regulations as revised on July 8, 1985. Such declarations were submitted to EPA on December 17, 1985; May 30, 1986; October 2, 20, and 24, 1986; August 6, 1987; September 8 and 30, 1988.

[54 FR 8190, Feb. 27, 1989]

§ 52.1035 Requirements for state implementation plan revisions relating to new motor vehicles.

Maine must comply with the requirements of § 51.120.

[60 FR 4737, Jan. 24, 1995]

Subpart V—Maryland

§ 52.1070 Identification of plan.

(a) Title of plans:

(1) ''Plan for Implementation of Ambient Air Quality Standards in Cumberland, Maryland-Keyser, West Virginia, Interstate Air Quality Control Region.''

(2) ''Plan for Implementation of Ambient Air Quality Standards in the Central Maryland Intrastate Air Quality Control Region.''

(3) ''Plan for Implementation of Ambient Air Quality Standards in the Metropolitan Baltimore Intrastate Air Quality Control Region.''

(4) ''Plan for Implementation of Ambient Air Quality Standards in the Maryland portion of the National Capital Interstate Air Quality Control Region.''

(5) ''Plan for Implementation of Ambient Air Quality Standards in the Southern Maryland Intrastate Air Quality Control Region.''

(6) ''Plan for Implementation of Ambient Air Quality Standards in the Eastern Shore Intrastate Air Quality Control Region.''

(b) The plans were officially submitted on January 28, 1972.

(c) The plan revisions listed below were submitted on the dates specified.

(1) Miscellaneous non-regulatory additions and errata to the plan submitted on February 25, 1972, by the Maryland Bureau of Air Quality Control.

(2) Clarification of emission data submitted on March 3, 1972, by the Maryland Bureau of Air Quality Control.

(3) Final State emission limitations, Regulations 10.03.35–10.03.41 of the Maryland Air Pollution Control Regulations, submitted on April 4, 1972, by the Maryland Bureau of Air Quality Control.

(4) Miscellaneous non-regulatory corrections and additions to the plan submitted on April 28, 1972, by the Maryland Bureau of Air Quality Control.

(5) Miscellaneous non-regulatory corrections and additions to the plan submitted on May 8, 1972, by the Maryland Bureau of Air Quality Control.

(6) Revision establishing unsuitable sites for construction of power plants submitted July 27, 1972, by the Maryland Department of Natural Resources.

(7) Transportation control plan for Metropolitan Baltimore and National Capital AQCR Submitted on April 16, 1973, by the Governor.

(8) Amendments to the Maryland Transportation Control Plans submitted on May 5, 1973, by the Governor.

(9) Amendments to the Maryland Transportation Control Plans submitted on June 15, 1973, by the Governor.

(10) Amendments to the Maryland Transportation Control Plans submitted on June 22, 1973, by the Governor.

(11) Amendments to the Maryland Transportation Control Plans submitted on June 28, 1973, by the Governor.

(12) Amendments to the Maryland plan for attainment and maintenance of secondary SO_2 standard for Metropolitan Baltimore AQCR submitted on July 31, 1973, by the Governor.

(13) Amendment to Maryland regulations 10.03.38.04J and 10.03.39.04J covering gasoline handling vapor control submitted on April 24, 1974, by the Governor of Maryland.

(14) Request for regulations 10.03.38.06G(2) and 10.03.39.06G(2) to be withdrawn from consideration submitted on November 29, 1974, by the Governor of Maryland.

(15) Amendments to Maryland Regulations 10.03.36, 10.03.37, 10.03.39, 10.03.40 and 10.03.41; deleting subsection .04B(3), which requires the lowering of the allowable sulfur-in-fuel limitation to 0.5

percent submitted on December 11, 1974 by the Governor.

(16) Amendment to Sections .04J(1) and .04J(2) of Maryland Regulations 10.03.38 and 10.03.39 (vapor recovery, Stage I); submitted on April 24, 1974, and amended on July 1, 1975 by the Governor.

(17) Amendment to Sections .04B(1) and .04B(2) of Maryland Regulations 10.03.37, 10.03.40 and 10.03.41 (allowable sulfur content in fuel); submitted on July 1, 1975 by the Governor.

(18) Amendment to Maryland Regulation 10.03.38, deleting subsection .04B(3), which requires the lowering of the allowable sulfur-in-fuel limitation to 0.5 percent, submitted on December 11, 1974 by the Governor.

(19) Amendments to Sections .03 (Air Pollution Episode System), .06 (Test Methods) and .11 (Permits); and deletion of Section .04 (Prior Registration of Proposed Installations) of Maryland Regulation 10.03.35 (Regulations Governing Air Pollution Control in the State of Maryland); amendments to Sections .03 (Control of Particulate Emissions), .04 (Control and Prohibition of oxides of nitrogen emissions), and associated tables of Maryland Regulations 10.03.36, 10.03.37, 10.03.40, and 10.03.41 (Regulations Governing Air Pollution Control in the Cumberland-Keyser, Central Maryland, Southern Maryland, and Eastern Shore AQCRs); amendments to Sections .03 (Control and Prohibition of Particulate Emissions), .04 (Control and Prohibition of Hydrocarbons andOxides of Nitrogen Emissions) and .06 (Control and Prohibition of Installations and Operations) and associated tables of Maryland Regulations 10.03.38 and 10.03.39 (Regulations Governing Air Pollution Control in the Metropolitan Baltimore and National Capital AQCRs); submitted on April 24, 1974 by the Governor.

(20) Amendments to Sections .01 (Definitions), .04 (Ambient Air Quality Standards (former Section .05 of Regulations)), 10.03.36 through 10.03.41 (Regulations Governing Control of Air Pollution in the State of Maryland); amendments to Sections .01 (Control and Prohibition of Open Burning), .02 (Control and Prohibition of Particulate Emissions), .03 (Control and Prohibition of Sulfur Oxides, Hydrocarbons and Oxides of Nitrogen Emissions), and .06 (Control and Prohibition of Installations and Operations) of Maryland Regulations 10.03.36, 10.03.37, 10.03.40, and 10.03.41 (Regulations Controlling Air Pollution in the Cumberland-Keyser, Central Maryland, Southern Maryland and Eastern Shore AQCRs); amendments to Section .02 (Control and Prohibition of Visible Emissions), .03 (Control and Prohibition of sulfur oxides, hydrocarbons, and oxides of nitrogen emissions), and .06 (Control and Prohibition of Installations and Operations) of Maryland Regulations 10.03.38 and 10.03.39 (Regulations Controlling Air Pollution in the Metropolitan Baltimore and National Capital AQCRs); submitted on December 11, 1974 by the Governor.

(21) Amendments to Section .11 (Permits) of Maryland Regulation 10.03.35 (Regulations Governing Control of Air Pollution in the State of Maryland); amendments to Section .04 (Control and prohibition of sulfur oxides emissions) of Maryland Regulations 10.03.36, 10.03.37, 10.03.40 and 10.03.41 (Regulations Governing Air Pollution Control in the Cumberland-Keyser, Central Maryland, Southern Maryland and Eastern Shore AQCR's); deletion of Section .03D(1) (Control of particulate matter from grain drying installations) from Maryland Regulations 10.03.36, 10.03.37, 10.03.40 and 10.03.41; deletion of Section .03D (Control of particulate matter from grain drying installations) from Maryland Regulations 10.03.38 and 10.03.39 (Regulations Governing Air Pollution Control in the Metropolitan Baltimore and National Capital AQCR's) submitted by the Governor on July 1, 1975.

(22) A Consent Order for the Chalk Point power plant issued by the Circuit Court for Montgomery County on February 27, 1978.

(23) Amendments to Sections .01 (Definitions), .03 (Air Pollution Episode System), .06 (Test Methods) and .12 (Emission Test Methods); and deletion of Section .08 (Penalties and Plans for Compliance) of Regulation 10.03.35 (Regulations Governing Air Pollution Control in the State of Maryland); amendments to Table 1 (Emission Standards for New Fuel Burning Equipment) of Maryland Regulations 10.03.36

through 10.03.41; amendments to Section .04 (Control and Prohibition of Gas and Vapor Emissions) and .06 (Control and Prohibition of Installations and Operations; and deletion of Section. .03E (Process Weight Requirements) and .07 (Transition from Previous Regulations) of Maryland Regulation 10.03.38 (Regulation Governing Air Pollution Control in the Metropolitan Baltimore AQCR); amendments to Section .01 (Control of Open Fires) and .04 (Control of Gas and Vapor Emissions; and deletion of Sections .03E (Process Weight Requirements) and .07 (Transition from Previous Regulations) of Maryland Regulation 10.03.39 (Regulation Governing Air Pollution Control in the Maryland Portion of the National Capital Interstate AQCR) submitted on February 10, 1977 by the Governor.

(24) Amendments to Maryland Regulation 10.03.35 through 10.03.41 inclusive which supplement the English System measurement with equivalent metric units submitted on February 10, 1977 by the Governor.

(25) Consent Order dated July 28, 1978 between the Potomac Electric Power Company and the Department of Health and Mental Hygiene of the State of Maryland in the Circuit Court for Montgomery County (No. 49352—Equity) submitted on August 8, 1978 by Acting Governor Blair Lee.

(26) Consent Orders for Beall Jr./Sr. High School and Mount St. Mary's College issued by the Secretary of the Maryland Department of Health and Mental Hygiene on January 30, 1979 and March 8, 1979 respectively.

(27) Amendments to Sections .01, .07, and .11 of Maryland Regulation 10.18.01 as submitted on January 19, 1979 by the Governor.

(28) Amendments to Sections .03D, .03F, .03H, .06I of Maryland Regulation 10.18.04 and 10.18.05 as submitted on January 19, 1979 by the Governor.

(29) Variances from Maryland regulations 10.18.04.02(A), 10.18.04.03(B)(3), and 10.18.04.04(B)(1) relating to visible emissions, particulate matter from solid fuel burning equipment and prohibition of usage of fuel with sulfur content in excess of one percent by weight, respectively. The variance request was submitted on October 24, 1979 by the Governor of Maryland.

(30) Consent orders submitted by the Governor on July 16, 1975, November 18, 1977, and by the Administrator, Air Quality Programs on June 15, 1979 granting the Westvaco Corporation an exception to Regulation COMAR 10.18.02.04B.

(31)–(32) [Reserved]

(33) A consent order amending regulation 10.18.07, 10.18.07.02B, 10.18.07.03B(2)a, for the Firestone Plastics Co., Inc., Perryville, Maryland, submitted on December 1, 1978, by the Maryland Environmental Health Administration.

(34) Amendment to Maryland regulations 10.18.05.03(B)(2), 10.18.05.02(A), and 10.18.05.03(B)(1)(a) relating to relaxation of particulate emissions, visible emissions and waiving of particulate control equipment requirement for the Chalk Point Generating Station Unit ı3. The amendment, a Secretarial Order, was submitted on August 13, 1979 by the State of Maryland.

(35) Variance from Maryland regulation 10.18.04.02(A) relating to visible emissions and allowing a maximum visible emission of 25% opacity. This variance expires on September 11, 1982. The variance request was submitted on September 27, 1979 by the State of Maryland.

(36) Amendments to Sections .01 (Definitions), .04 (Ambient Air Quality Standards), and .11 (Permits) of Maryland Regulation 10.18.01 (Regulations Governing Control of Air Pollution in the State of Maryland); and amendments to Section .02 (Control and Prohibition of Visible Emissions) of Maryland Regulations 10.18.04 and 10.18.05 (Regulations Governing Air Pollution Control in the Metropolitan Baltimore and National Capital AQCRS's) submitted by the Governor on September 26, 1979.

(37) Amendments to Section .04J(3)a and .04J(3)b (Organic Compounds) of Maryland Regulations 10.18.04 and 10.18.05; submitted on February 10, 1977 by the Governor.

(38) Deletion of Section .06G(2) (Control and Prohibition of Photochemically Reactive Organic Compounds from sources existing on or before February 12, 1974) of Maryland Regulations

10.18.04 and 10.18.05; submitted on December 10, 1979 by the Governor.

(39) Deletion of Sections .06G(1) and .06G(3) (Control and Prohibition of Photochemically Reactive Organic Materials From Sources Built or Modified after February 12, 1974) of Maryland Regulations 10.18.04 and 10.18.05 from the Maryland State Implementation Plan (SIP).

(40) Letter of January 21, 1980 from Maryland to EPA explaining the State's interpretation of the scope of coverage of Maryland Regulation 10.18.04.04J.

(41) Amendments to Sections .06 of Maryland Regulation 10.18.04 and 10.18.05 as submitted on January 19, 1979 by the Governor.

(42) Amendment to Section .01(y) of Maryland Regulation 10.18.01 as submitted on December 10, 1979 by the Governor.

(43) Amendments to Regulations 10.18.04 and 10.18.05; Sections .04J(1)c, .04J(1)d, .04J(1)e(i), .04J(1)f, .04J(1)g, .04J(1)h, .04J(1)i(i), .04J(3)d, .04J(4)a, .04J(4)b, and .04J(5) a through j; submitted on January 19, 1979, and amended on September 26, 1979 by the State of Maryland.

(44) A revision submitted by the State of Maryland on December 20, 1979 which is intended to establish an Ambient Air Quality Monitoring Network.

(45) Recodification of the Maryland Regulations submitted by the State of Maryland on May 22, 1980.

(46) Amendments to section .04D(4) of COMAR 10.18.04 and COMAR 10.18.05 establishing a revised sulfur oxides emissions limitation for all existing solid fuel-fired, cyclone type fuel burning equipment having an actual heat input in excess of 1,000 million Btu/hour; submitted on February 20, 1980 by the Governor.

(47) October 1, 1980 letter from George P. Ferreri, Maryland Office of Environmental Programs to James E. Sydnor, EPA, certifying that the Baltimore Gas & Electric Company's C. P. Crane Generating Station is the sole facility to which COMAR 10.18.04.04D(4) and 10.18.05.04D(4) would apply.

(48) A revision submitted by the State of Maryland on 9/10/80 consisting of a variance issued to the General Refractories Company of Baltimore, Maryland exempting the Company from the ''No Visible Emissions'' requirements of COMAR 10.18.04.02A for aperiod of three (3) years commencing 9/2/80.

(49) A revision submitted by the State of Maryland on November 3, 1980 consisting of a Consent Agreement (Order) between the State of Maryland and the Maryland Slag Company decreasing the particulate matter emission limitation for the Company.

(50) A revision submitted by the State of Maryland on October 24, 1979 consisting of amendments to the following regulations:

COMAR 10.18.01 as recodified in 40 CFR 52.1070(c)(45), 10.18.02 as recodified in 40 CFR 52.1070(c)(45), 10.18.03 as recodified in 40 CFR 52.1070(c)(45), 10.18.04 as recodified in 40 CFR 52.1070(c)(45), 10.18.05 as recodified in 40 CFR 52.1070(c)(45), 10.18.06 as recodified in 40 CFR 52.1070(c)(45), 10.18.07 as recodified in 40 CFR 52.1070(c)(45).

(51) A revision submitted by the State of Maryland on May 22, 1980, consisting of changes in definitions in sections 10.18.01.01 and revoking of obsolete regulations, COMAR 10.03.38.04 B(4) and 10.03.39.04 B(4).

(52) A revision submitted by the State of Maryland on April 24, 1974, consisting of changes in COMAR 10.03.35.06 A(1) and 10.03.35.06 A(3).

(53) A revision submitted by the State of Maryland on December 10, 1979, consisting of changes in Sections .01 and .11 of COMAR 10.18.01, and in Sections .05 and .07 of COMAR 10.18.02, 10.18.03, 10.18.04, 10.18.05, 10.18.06 and 10.18.07.

(54) A revision submitted by the State of Maryland on October 17, 1980, consisting of an exception to COMAR 10.18.06.02B for the Maryland Cup Corporation.

(55) A revision submitted by the State of Maryland on August 7, 1981 consisting of an exception to COMAR 10.18.09.07A(2)(c) for the Reading-Whitehall Paperboard Company.

(56) A Secretarial order submitted by the State of Maryland on June 23, 1981 consisting of a variance issued to the Potomac Electric Power Company at Dickerson, Maryland exempting the company from the ''no visible emissions'' requirements of COMAR 10.18.09.05A(2) until five years from the date of approval by EPA.

(57) A Secretarial order submitted by the State of Maryland on July 17, 1981 consisting of a various issued to the American Cyanamid Company, Havre de Grace, Maryland from the ''no visible emissions'' requirement of COMAR 10.18.06.02B until July 8, 1986.

(58) Amendments to COMAR 10.18.01, 10.18.06, 10.18.08, 10.18.09, 10.18.11, 10.18.12, 10.18.13, 10.18.14, 10.18.21, and Technical Memorandum TM–116 (amended November 1980) as submitted by the Governor on May 18, 1981.

(59) Addition of Maryland Regulation 10.18.06.14 (Control of PSD sources) which incorporates by reference the Federal prevention of significant deterioration (PSD) requirements set forth in 40 CFR 52.21; submitted on June 24, 1981 by the Governor.

(60) A State Implementation Plan for the control of lead (Pb) emissions submitted on October 23, 1980 by the Governor.

(61) A letter containing supplemental clarifying information with respect to the State's control strategy demonstration; submitted on July 27, 1981 by the Maryland Air Management Administration.

(62) A revised Secretarial order controlling lead emissions from the Mobay Chemical Corporation's frit manufacturing plant in Baltimore, Maryland; submitted December 16, 1981 by the Maryland Air Management Administration.

(63) A revision submitted by the State of Maryland on October 8, 1981 detailing a plan for satisfying requirements of sections 121 and 127 of the Clean Air Act Amendments of 1977.

(64) A revision submitted by the State of Maryland on November 18, 1981, consisting of a Modified Amended Consent Order for Potomac Electric Power Company's Chalk Point generating station.

(65) A Secretarial order stating the terms under which a construction permit for a new source in a nonattainment area will be issued by the Northeast Maryland Waste Disposal Authority to Wheelabrator-Frye, Inc. to construct and operate a municipal incinerator; submitted on December 22, 1981 by the Director, Maryland Air Management Administration, Department of Health and Mental Hygiene.

(66) An amendment to Code of Maryland Air Regulation (COMAR) 10.18.08.05A(1) revising the method for calculating particulate emissions from incinerators located in the Cumberland-Keyser, Central Maryland, Southern Maryland and Eastern Shore Air Quality Control Regions (AQCR's), submitted on January 11, 1982 by the Governor.

(67) Code of Maryland Air Regulations (COMAR) 10.18.10 (Control of Iron and Steel Production Installations); Technical Memorandum AMA–TM 81–04: Amendment to AMA–TM 73–116; Amendments to COMAR 10.18.01.01 (General Administrative Regulations—Definitions) and COMAR 10.18.06.02 (General Emission Standards, Prohibitions and Restriction); and a New Amended Plan for Compliance for the Bethlehem Steel Corporation's Sparrows Point, Maryland Plant; submitted on August 11, 1981 by the Governor.

(68) The revised Health-Environmental Article of the Annotated Code of Maryland, submitted on July 2, 1982 by the Director, Maryland Air Management Administration, Department of Health and Mental Hygiene.

(69) A revision submitted by the State of Maryland on November 15, 1982, consisting of an extension to the previous visible emission exception to COMAR 10.18.01.08 (Exception to Visible Emission Requirements) for the Maryland Cup Corporation. The exception is renewed until September 11, 1987.

(70) A modified Secretarial order stating the terms under which a construction permit for a new source in a nonattainment area will be issued to Wheelabrator-Frye, Inc. who will construct, own, and operate a municipal incinerator; submitted on March 17, 1983 by the Director, Maryland Air Management Administration, Department of Health and Mental Hygiene.

(71) Plan Revision, excluding the schedules for additional VOC controls and the required Vehicle Emissions Inspection Program, providing for attainment of the Ozone and Carbon Monoxide Standards, submitted by the State on July 1, 1982 for the Metropolitan Baltimore Intrastate Air Quality Control Region (AQCR) and November 5, 1982 for the Maryland portion of the

National Capital Interstate AQCR. On May 4, 1983, and June 13 and 16, 1983, the State submitted amended I/M regulations. A revised schedule for the adoption of controls for VOC sources was submitted on December 23, 1983.

(72) Amendments to Code of Maryland Regulations (COMAR) 10.18.01, .02, .06, .11, .13, and .21 which apply to air quality control areas III and IV, submitted on August 22, 1983.

(73) A revision submitted by the State of Maryland on July 12, 1983, consisting of a plan for Compliance for the J.L. Clark Manufacturing Company in Havre De Grace.

(74) A Consent Order granting the Westvaco Corporation a sulfur dioxide (SO_2) emissions limitation which is equivalent to COMAR 10.18.09. 07(A)(1)(a); submitted on September 7, 1983, as amended on February 7, 1984 by the Maryland Air Management Administration.

(75) Revision submitted by the State of Maryland on December 13, 1983 consisting of a Plan for Compliance for the General Motors Corporation, GM Assembly Division, Baltimore City Plant.

(76) Revision submitted by the State of Maryland on December 13, 1983 consisting of a Plan for Compliance for the American Can Company, Baltimore City.

(77) Revision submitted by the State of Maryland on December 13, 1983 consisting of a Plan for Compliance for the National Can Corporation, Baltimore County.

(78) Revision submitted by the State of Maryland on April 6, 1984 consisting of a Plan for Compliance for the Crown Cork and Seal Company, Inc., Baltimore City.

(79) Revision submitted by the State of Maryland on April 6, 1984 consisting of a Plan for Compliance for the Continental Can Company, Baltimore City.

(80) A revision submitted by the State of Maryland on January 26, 1984, and May 25, 1984 consisting of amendments to change the State's stationary source stack testing procedures document and to correct a State procedural defect relating to procedures for observing visible emissions from iron and steel facilities.

(81) [Reserved]

(82) Revisions to the Code of Maryland Regulations (COMAR) were submitted by the Director of the Maryland Air Management Administration of March 14, 1984.

(i) Incorporation by reference. (A) Amendments to COMAR 10.18.02 (Permits, Approvals and Registration) and COMAR 10.18.08 (Control of Incinerators), as published in the Maryland Register on February 3, 1984 (proposed on November 11, 1983).

(ii) Additional material. (A) Letter from the MAMA dated November 29, 1984 clarifying that permit applications would only be accepted from incinerators subject to the hazardous waste facility regulations and that hazardous waste facility permits would be treated as air quality permits for all purposes.

(83) Revisions to the Code of Maryland Regulations (COMAR) were submitted by the Director of the Maryland Air Management Administration on March 14, 1984.

(i) Incorporation by reference.

(A) Amendments to COMAR 10.18.09 (Control of Fuel Burning Equipment and Stationary Internal Combustion Engines), as published in the Maryland Register on March 2, 1984.

(ii) Additional information.

(A) Letter from MAMA dated November 29, 1984 clarifying that a permit cannot be issued for the sources unless they undergo new source review as under COMAR 10.18.02 (Permits, Approvals and Registration).

(84) [Reserved]

(85) Revisions to the Ozone Attainment Plan were submitted by the Director, Maryland Air Management Administration, on August 1, 1984.

(i) Incorporation by reference.

(A) State Secretarial Order for the Monarch Manufacturing Company located in Belcamp, Maryland, allowing interim VOC emission standards to be used by the Company until source-specific regulations are developed by MAMA. The Company shall come into compliance with the source-specific regulations within six months after their adoption. The Secretarial Order was approved on July 23, 1984.

(86) Revisions submitted on March, 1, 1989 by the Secretary, Maryland Department of the Environment, amending the Code of Maryland Air Regulations (COMAR) 10.18.21.10 (Graphic Arts) and COMAR 10.18.21.13 (Miscellaneous Metal Coating, Interior Sheet Drum Lining).

(i) Incorporation by reference.

(A) Revisions to COMAR 10.18.21.10, pertaining to graphic arts, and COMAR 10.18.21.13, pertaining to miscellaneous metal coating, interior sheet drum lining. These revisions were adopted by the Secretary of Health and Mental Hygiene on June 10, 1987and became effective on August 10, 1987.

(ii) Additional information.

(A) Letter of June 30, 1987 from George P. Ferreri, Director, Maryland Air Management Administration, to Thomas J. Maslany, EPA Region III, forwarding revisions to COMAR 10.18.21.10 and COMAR 10.18.21.13.

(B) Letter of March 13, 1989 from George P. Ferreri, Director, Maryland Air Management Administration to Stanley L. Laskowski, Acting Regional Administrator, EPA Region III, clarifying information with respect to the adopted and effective dates of the revisions to COMAR 10.18.21.10 and COMAR 10.18.21.13.

(87) A revision submitted by the Secretary, Maryland Department of Health and Mental Hygiene on March 30, 1987, consisting of amendments to the Good Engineering Practice (GEP) Stack Height Regulations, COMAR 10.18.01.08 (Determination of Ground Level Concentrations—Acceptable Techniques).

(i) Incorporation by reference.

(A) Letter of March 30, 1987 from the Secretary, Maryland Department of Health and Mental Hygiene.

(B) COMAR 10.18.01.08 (Determination of Ground Level Concentrations—Acceptable Techniques), which was adopted by the Maryland Department of Health and Mental Hygiene on January 23, 1987.

(ii) Additional information.

(A) None.

(88) Revisions to the Maryland State Implementation Plan submitted by the Secretary, Maryland Department of the Environment, on October 30, 1989 as they apply to distributors and retailers of gasoline.

(i) *Incorporation by reference.* (A) Letter from the Secretary of the Environment, Maryland Department of the Environment dated October 30, 1989, submitting a revision to the Maryland State Implementation Plan.

(B) Amended Regulation .01 and new Regulation .06 under the Code of Maryland Air Regulations (COMAR) 26.11.13, Control of Gasoline and Volatile Organic Compounds Storage and Handling limiting the RVP of gasoline to 9.0 psi from May 1 through September 15. The amendments to COMAR 26.11.13.01 and the addition of COMAR 26.11.13.06 were effective on December 3, 1989 in the State of Maryland.

(ii) Additional Materials—Remainder of State submittal

(89) Revisions to the State Implementation Plan submitted by the Maryland Department of the Environment on June 30, 1987.

(i) *Incorporation by reference.*

(A) Letter from the Maryland Department of Environment dated June 30, 1987 submitting a revision to the Maryland State Implementation Plan pertaining to the definitions of true vapor pressure and vapor pressure.

(B) Maryland Register Volume 13, page 2048; COMAR 10.18.01.01 Definitions V–1. and X–1 (Now recodified as COMAR 26.11.01.01 Z. and CC.).

(90) Revisions to the State Implementation Plan submitted by the Maryland Department of the Environment on March 21, 1991.

(i) Incorporation by reference.

(A) Letter from the Maryland Department of Environment dated March 21, 1991 submitting a revision to the Maryland State Implementation Plan.

(B) Recodified Maryland Regulations, revised effective August 1, 1988.

(*1*) COMAR 26.11.01.01A. through J., L., O. through BB., DD. (except for ''ammonium carbonates''); COMAR 26.11.01.02 through 26.11.01.09.

(*2*) COMAR 26.11.02.01 through 26.11.02.03A.(6)(o), 26.11.02.03A.(7) through 26.11.02.09, 26.11.02.10A., 10E., 26.11.02.11A., .11B.(2)–(3), 11C., 26.11.02.12 through 26.11.02.16.

(*3*) COMAR 26.11.03.01 through 26.11.03.03, 26.11.03.05 through 26.11.03.08.

(*4*) COMAR 26.11.05—(Entire Chapter).

(*5*) COMAR 26.11.06.03A.–.03C.; 26.11.06.05, 26.11.06A., .06C., .06D; 26.11.06.10, 26.11.06.11, 26.11.06.15, 26.11.06.16.

(*6*) COMAR 26.11.07.01 through 26.11.07.04, 26.11.07.05A. (1), (2), 26.11.07.05A.(5) through .05A.(7), 26.11.07.05B (1), (2), (4), (5).

(*7*) COMAR 26.11.09.01 through 26.11.09.04, 26.11.09.05B., 26.11.09.06 through 26.11.09.09.

(*8*) COMAR 26.11.10—Entire chapter except for COMAR 26.11.10.03B.(3).

(*9*) COMAR 26.11.11—Entire chapter except for COMAR 26.11.11.04A(1)–(4).

(*10*) COMAR 26.11.12—Entire Chapter.

(*11*) COMAR 26.11.13.01 (definitions of ''external floating roof,'' ''gasoline,'' ''internal floating roof,'' ''liquid-mounted seal,'' ''metallic-type shoe seal,'' ''rim-mounted secondary seal,'' ''shoe mounted secondary seal,'' ''tank truck,'' ''vapor control system,'' ''vapor mounted seal''; 26.11.13.02 (except for .02C(3)), 26.11.13.03, 26.11.13.04B., 26.11.13.05.

(*12*) COMAR 26.11.19.01A., 01B(2), (4), (5), .02A, .02B(1) (except for ''low VOC adhesives''), .02B(2), (3), .02C(1), (2), .02D., .02E (except for all references to variables ''C'' and ''D''), .02F(1), (2), (3) (except for ''and''); 26.11.19.04 through 26.11.19.10, 26.11.19.13, 26.11.19.14.

(*13*) COMAR 26.11.20—Entire Chapter except for COMAR 26.11.20.02.

(ii) Additional materials.

(A) Remainder of the March 21, 1991 State Submittal known as Maryland 91–01B.

(91) Revisions to the State Implementation Plan submitted by the Maryland Department of the Environment—Air Management Administration on August 20, 1984, regarding a bubble for American Cyanamid in Havre de Grace, Maryland.

(i) Incorporation by reference.

(A) Letter from the Maryland Department of Health and Mental Hygiene—Air Management Administration (now known as the Maryland Department of the Environment—Air Management Administration) dated August 20, 1984 submitting a revision to the Maryland State Implementation Plan regarding a bubble for American Cyanamid.

(B) Secretarial Order (By Consent) between American Cyanamid and the Maryland State Department of Health and Mental Hygiene—Air Management Administration (now known as the Maryland Department of the Environment—Air Management Administration) except for section 2, approved on August 2, 1984.

(ii) Additional material.

(A) Letter dated September 17, 1984 from Ronald E. Lipinski, MAMA, to James Topsale, EPA Region III, providing emissions information for the sources involved in the American Cyanamid bubble.

(B) Public Hearing record for the May 23, 1984 public hearing.

(C) Technical Support Document, prepared by Maryland, for American Cyanamid, including formulas to calculate bubble emissions.

(92) Revisions to the State Implementation Plan submitted by the Maryland Department of the Environment on December 15, 1987.

(i) Incorporation by reference. (A) Letter from the Maryland Department of Environment dated December 15, 1987 submitting a revision to the Maryland State Implementation Plan.

(B) Amendments to the Code of Maryland Air Regulations (COMAR) 10.18.03, State Adopted National Ambient Air Quality Standards and Guidelines limited to the amendment of 10.18.03.04, carbon monoxide and COMAR 10.18.06, General Emission Standards, Prohibitions, and Restrictions, limited to the amendment of 10.18.06.04, carbon monoxide in areas III and IV. The amendments to COMAR 10.18.03.04 and 10.18.06.04 were adopted by the Maryland Department of the Environment on November 4, 1987, and made effective on January 5, 1988.

(93) Revisions to the State Implementation Plan submitted by the Maryland Department of the Environment on December 30, 1987.

(i) Incorporation by reference.

(A) Letter from the Maryland Department of Environment dated December 15, 1987, submitting revisions to the Maryland State Implementation Plan.

(B) Amendments to regulations 10.18.01 O–1, 10.18.02.03 H(3)(i), and 10.18.06.14 under the Code of Maryland Administrative Regulations (COMAR)

revising Maryland's prevention of significant deterioration program to incorporate changes to 40 CFR 52.21 made between 1980 and 1986. The amendments to COMAR 10.18.01 O–1, 10.18.02.03 H(3)(i), and 10.18.06.14 were effective on January 5, 1988 in the State of Maryland.

(ii) Additional materials.

(A) None.

(94) Revisions to the State Implementation Plan submitted by the Maryland Department of the Environment on March 8, 1989.

(i) Incorporation by reference.

(A) Letter from the Maryland Department of Environment dated March 1, 1989, submitting revisions to the Maryland State Implementation Plan.

(B) Amendments to regulations 26.11.01.01, 26.11.02.10 (C)(9), and 26.11.06.14 (proposed as 10.18.01 O–1, 10.18.02.03 H(3)(i), and 10.18.06.14) under the Code of Maryland Administrative Regulations (COMAR) revising Maryland's prevention of significant deterioration program to incorporate changes to 40 CFR 52.21 made between 1986 and 1987, thereby establishing the increment for NO_2 and requiring sources to conduct an NO_2 increment consumption analysis. The amendments to COMAR 26.11.01.01, 26.11.02.10 (C)(9), and 26.11.06.14 were effective on March 21, 1989 in the State of Maryland.

(ii) Additional materials.

(A) None.

(95) Revisions to the State Implementation Plan submitted by the Maryland Department of the Environment on March 28, 1991.

(i) Incorporation by reference.

(A) Letter from the Maryland Department of Environment dated March 21, 1991 submitting revisions to the Maryland State Implementation Plan.

(B) Amendments to regulations 26.11.01.01 and 26.11.06.14 under the Code of Maryland Administrative Regulations (COMAR) revising Maryland's prevention of significant deterioration program to incorporate changes to 40 CFR 52.21 made between 1987 and 1989. The amendments to COMAR 26.11.01.01, and 26.11.06.14 were effective on March 31, 1991 in the State of Maryland. The amendments to 26.11.02.10 (C)(9) were effective on May 8, 1991 in the State of Maryland.

(ii) Additional materials.

(A) None.

(96) Revisions to the State Implementation Plan submitted by the Maryland Department of the Environment on April 3, 1992.

(i) Incorporation by reference.

(A) Letter from the Maryland Department of Environment dated March 27, 1992 submitting revisions to the Maryland State Implementation Plan.

(B) Amendments to regulations 26.11.01.01 and 26.11.06.14 under the Code of Maryland Administrative Regulations (COMAR) revising Maryland's prevention of significant deterioration program to incorporate changes to 40 CFR 52.21 made between 1989 and 1990. The amendments to COMAR 26.11.01.01 and 26.11.06.14 were effective on February 17, 1992 in the State of Maryland.

(ii) Additional materials.

(A) Remainder of April 3, 1992, State submittal.

(97) Revisions to the State Implementation Plan submitted on June 14, 1989, by the Maryland Department of the Environment:

(i) Incorporation by reference.

(A) Letter of June 14, 1989, from the Maryland Department of the Environment transmitting a revision to a Maryland State Implementation Plan.

(B) Revision to COMAR 26.11.01.01E (Definition of ''Control Officer''), effective June 20, 1989.

(ii) Additional material.

(A) Remainder of the June 14, 1989 State submittal.

(98) Revisions to the Maryland State Implementation Plan submitted on April 5, 1991, and amended on January 18, 1993, by the Maryland Department of the Environment:

(i) Incorporation by reference.

(A) Letters of April 5, 1991, and January 18, 1993, from the Maryland Department of the Environment transmitting additions and revisions to Maryland's State Implementation Plan, pertaining to volatile organic compound regulations in Maryland's air quality regulations, Code of Maryland Administrative Regulations (COMAR) 26.11.

(B) The addition of COMAR 26.11.19.15C (proposed as COMAR 10.18.19.15C), Standards for Adhesive

Application, adopted by the Secretary of Health and Hygiene on June 10, 1987, effective August 10, 1987;

(C) Amendments to COMAR 26.11.19.15C adopted by the Secretary of the Environment on March 9, 1991, effective May 8, 1991; and

(D) Amendments to COMAR 26.11.19.15C(4) adopted by the Secretary of the Environment on January 18, 1992, effective February 15, 1993.

(ii) Additional material.

(A) Remainder of April 5, 1991, and January 18, 1993, State submittals pertaining to COMAR 26.11.19.15C, Standards for Adhesive Application.

(B) Letter of April 17, 1992, from the Maryland Department of the Environment clarifying the intent of its April 5, 1991, letter transmitting revisions and additions to Maryland's State Implementation Plan.

(C) Letter of July 10, 1992, from the Maryland Department of the Environment clarifying Maryland's intent regarding COMAR 26.11.19.15C(4) and stating that Maryland was working to correct the administrative error in COMAR 26.11.19.15C(4) contained in the April 5, 1991, submittal.

(99) Revisions to the Maryland regulations for particulate matter (PM–10) submitted on March 1, 1989, by the Maryland Department of the Environment:

(i) Incorporation by reference.

(A) Letter of March 1, 1989, from the Department of the Environment transmitting a revision to the Maryland State implementation plan for particulate matter (PM–10) Group III areas.

(B) COMAR 10.18.01 (General Administrative Provisions), COMAR 10.18.02 (Permits, Approvals, and Registration), COMAR 10.18.03 (State-Adopted National Ambient Air Quality Standards and Guidelines), COMAR 10.18.05 (Air Pollution Episode System), and COMAR 10.18.06 (General Emission Standards, Prohibitions, and Restrictions) as published in the Maryland Register on February 10, 1989. The regulations were adopted on January 20, 1989, and became effective on March 21, 1989.

(ii) Additional materials.

(A) Remainder of the State implementation plan revision request submitted by the Maryland Department of the Environment on March 1, 1989.

(100) Revisions to the Code of Maryland Administrative Regulations (COMAR) submitted on June 7, 1990, by the Maryland Department of the Environment:

(i) Incorporation by reference.

(A) Letter of June 7, 1990, from the Maryland Department of the Environment transmitting revisions to the Maryland State Implementation Plan.

(B) The following revised regulations to COMAR 26.11.05 (Air Pollution Episode Plans), effective June 18, 1990: 26.11.05.01A., .01B., .01H., and .01J.; 26.11.05.02B., .02C.; 26.11.05.03A., 03B., 03D.; 26.11.05.05A., 05B., 05C., and .05D. Deletion of the definition ''coefficient of haze.''

(ii) Additional material.

(A) Remainder of the June 7, 1990, State submittal.

(101) Revisions to the State of Maryland Regulations Oxygenated Gasoline Program regulations submitted on November 13, 1992, by the Maryland Department of the Environment. Effective date October 26, 1992.

(i) Incorporation by reference.

(A) Letter of November 13, 1992, from the Maryland Department of the Environment transmitting Oxygenated Gasoline Program regulations.

(B) The following State of Maryland regulations effective October 26, 1992:

(*1*) Amendments to COMAR 26.11.13.01 (Control of Gasoline and Volatile Organic Compound Storage and Handling).

(*2*) Deletion of Regulation .06 under COMAR 26.11.13 (Control of Gasoline and Volatile Organic Compound Storage and Handling).

(*3*) New Regulation COMAR 26.11.20.03 (Mobile Sources).

(*4*) COMAR 03.03.05.01, .01–1, .02–1, .05, .08, and .15 (Motor Fuel Inspection).

(*5*) COMAR 03.03.06.01 through .06 (Emissions Control Compliance).

(ii) The remainder of the November 13, 1992, submittal.

(102) Revisions to the Maryland State Implementation Plan submitted on April 5, 1991 by the Maryland Department of the Environment:

(i) Incorporation by reference.

(A) Letter of April 5, 1991 from the Maryland Department of the Environment transmitting addition, deletions, and revisions to Maryland's State Implementation Plan, pertaining to volatile organic compound regulations in Maryland's air quality regulations, Code of Maryland Administrative Regulations (COMAR) 26.11.

(B) The following revisions to the provisions of COMAR 26.11, adopted by the Secretary of Health and Hygiene on June 10, 1987, effective August 10, 1987:

(*1*) Amendments to COMAR 26.11.06.06B (proposed as 10.18.06.06B), pertaining to control of Volatile organic compounds from installations.

(*2*) Addition of new section COMAR 26.11.06.06E, (proposed as 10.18.06.06E), exemptions.

(*3*) Amendments to COMAR 26.11.19.01B, (proposed as COMAR 10.18.21.01B), including the addition of the definitions for the terms adhesive and exempt solvent, the renumbering of all definitions.

(*4*) Amendments to COMAR 26.11.19.02B–F, (proposed as COMAR 10.18.21.02B–F), pertaining to compliance methods, methods of assessing compliance, test methods, computations, and reporting.

(*5*) Amendments to COMAR 26.11.19.10B, (proposed as COMAR 10.18.21.10B), pertaining to applicability and exemptions for graphic arts sources.

(*6*) Amendments to COMAR 26.11.19.13, (proposed as COMAR 10.18.21.13), pertaining to miscellaneous metal coating.

(*7*) Addition of new section COMAR 26.11.19.15A (proposed as 10.18.21.15A), definition of terms.

(*8*) Addition of new section COMAR 26.11.19.15B (proposed as 10.18.21.15B), standards for paint, resin and adhesive manufacturing.

(C) Amendments to COMAR 26.11.19.12 (proposed as COMAR 10.18.21.12), pertaining to dry cleaning installations, including the addition of new sections E and F, pertaining to equipment specifications, emission standards, and compliance determinations for petroleum solvent dry cleaning installations, adopted by the Secretary of the Environment on April 21, 1989, effective June 20, 1989.

(D) Amendments to COMAR 26.11.19.12B–F, pertaining to applicability, exemptions, equipment specifications, emission standards, and compliance determinations for perchloroethylene and petroleum solvent dry cleaning installations, adopted by the Secretary of the Environment on May 17, 1990, effective July 16, 1990.

(E) The following revisions to the provisions of COMAR 26.11, adopted by the Secretary of the Environment on March 9, 1991, effective May 8, 1991:

(*1*) Amendments to COMAR 26.11.01.01, including the addition of definitions for the terms actual emissions, allowable emissions, potential to emit, premises, and reasonably available control technology (RACT); deletion of the definition for the term Ringelmann Smoke Chart; amendments to definitions for the terms New Source Impacting on a Non-Attainment Area (NSINA) and volatile organic compound (VOC); and renumbering of all definitions.

(*2*) Amendments to COMAR 26.11.02.03A(6)(k)(vii), pertaining to permits to construct or modify for motor vehicle gasoline storage tanks.

(*3*) The addition of new section COMAR 26.11.06.01, definitions for the terms installation and process line.

(*4*) Amendments to COMAR 26.11.06.06A, B and E, pertaining to applicability, control, and exemptions for sources of volatile organic compounds.

(*5*) The deletion of existing COMAR 26.11.13, pertaining to gasoline and volatile organic compound storage and handling.

(*6*) The addition of new COMAR 26.11.13.01, .02, .03, .05, and .06, pertaining to definitions, applicability, and exemptions for gasoline and volatile organic compounds storage and handling, large storage tanks, gasoline leaks from tank trucks, and Reid Vapor Pressure.

(*7*) Amendments to COMAR 26.11.19.01B, addition of the definition for the term transfer efficiency, amendments to the definition for the term coating.

(*8*) Amendments to COMAR 26.11.19.02A–F, pertaining to applicability, compliance methods, methods of assessing compliance, test methods,

computations, and reporting for volatile organic compound regulations.

(*9*) Amendments to COMAR 26.11.19.07, the addition of new section B and revisions to new section C (former section B), pertaining to paper, fabric, and vinyl coating.

(*10*) Amendments to COMAR 26.11.19.10A, the deletion of definitions for the terms high velocity hot-air dryer, letterpress methods, lithographic methods, and roll printing; revisions to the definition for the term web printing; and renumbering of all definitions.

(*11*) Amendments to COMAR 26.11.19.10B and C, pertaining to graphic arts, including the deletion of existing section C and the addition of new section C.

(*12*) The addition of new COMAR 26.11.19.11A, B, and C, pertaining to sheet-fed paper and plastic parts coating, including definitions for the terms fountain, letterpress printing, lithographic printing, plastic parts coating, and sheet-fed coating.

(*13*) Amendments to COMAR 26.11.19.13B and C, pertaining to miscellaneous metal coating.

(*14*) Amendments to COMAR 26.11.19.14B, pertaining to synthesized pharmaceutical products.

(*15*) Amendments to COMAR 26.11.19.15A and B, pertaining to paint, resin, and adhesive manufacturing, including revisions to definitions for the terms adhesive application, resin thin down tank, specialty footwear manufacturing, specialty spiral tube winding, spiral tube winding, and spiral wound tube impregnating and curing, the deletion of the definition for the term honeycomb core installation, and the renumbering of all definitions.

(ii) Additional material.

(A) Remainder of April 5, 1991 State submittal pertaining to COMAR 26.11.01.01, 26.11.02.03, 26.11.06.01, 26.11.06.06A, B and E, 26.11.13.01, 26.11.13.02, 26.11.13.03, 26.11.13.05, 26.11.13.06, 26.11.19.01B, 26.11.19.02A–F, 26.11.19.07, 26.11.19.10, 26.11.19.11A–C, 26.11.19.12, 26.11.19.13, 26.11.19.14B, and 26.11.19.15A and B.

(B) Letter of April 17, 1992 from the Maryland Department of the Environment clarifying the intent of its April 5, 1991 letter transmitting additions, deletions, and revisions to Maryland's State Implementation Plan.

(C) Letter of October 18, 1993 from the Maryland Department of the Environment formally withdrawing revisions to COMAR 26.11.19.11D and E, pertaining to lithographic printing, from consideration as revisions to Maryland's State Implementation Plan.

(103) Revisions to the Maryland State Implementation Plan submitted on September 20, 1991 by the Maryland Department of the Environment:

(i) Incorporation by reference.

(A) Letter of September 20, 1991 from the Maryland Department of the Environment transmitting addition, deletions, and revisions to Maryland's State Implementation Plan, pertaining to volatile organic compound regulations in Maryland's air quality regulations, Code of Maryland Administrative Regulations (COMAR) 26.11.

(B) The following revisions to the provisions of COMAR 26.11, adopted by the Secretary of the Environment on July 24, 1991, effective August 19, 1991:

(*1*) Amendments to COMAR 26.11.01.01DD, the definition for the term volatile organic compound.

(*2*) Amendments to COMAR 26.11.01.04C, pertaining to emission test methods, including the addition of a: reference to 40 CFR part 60; and Methods 1000, 1002, and 1003 and Appendixes A and B, contained in ''Technical Memorandum 91–01, Test Methods and Equipment Specifications for Stationary Sources'' (January 1991).

(*3*) Amendments to COMAR 26.11.13.02(C)(2), pertaining to exemptions for large storage tanks.

(*4*) Amendments to COMAR 26.11.19.02D(2), pertaining to test methods.

(*5*) Amendments to COMAR 26.11.19.07A, including amendments to the definition for the term paper coating, and the addition of definitions for the terms sheet-fed paper coating and ultraviolet curable coating, and the renumbering of definitions.

(*6*) Addition of new COMAR 26.11.19.07D, pertaining to sheet-fed paper coating.

(*7*) Addition of new COMAR 26.11.19.11B(2), and amendments to COMAR 26.11.19.11C, pertaining to plastic coating.

(*8*) Amendments to COMAR 26.11.19.12F(3) and (4), pertaining to compliance determinations for petroleum solvent dry cleaning installations.

(*9*) Addition of new COMAR 26.11.19.16, pertaining to volatile organic compound equipment leaks.

(ii) Additional material.

(A) Remainder of the September 20, 1991 State submittal pertaining to COMAR 26.11.01.01DD, COMAR 26.11.01.04C, Appendixes A and B and Methods 1000, 1002, and 1003 contained in ''Technical Memorandum 91–01, Test Methods and Equipment Specifications for Stationary Sources'' (January 1991), COMAR 26.11.13.02(C)(2), COMAR 26.11.19.02D(2), COMAR 26.11.19.07A, COMAR 26.11.19.07D, COMAR 26.11.19.11B(2) and C, COMAR 26.11.19.12F(3) and (4), and COMAR 26.11.19.16.

(104) Revisions to the Maryland State Implementation Plan submitted on April 2, 1992 by the Maryland Department of the Environment:

(i) Incorporation by reference.

(A) Letter of April 2, 1992 from the Maryland Department of the Environment transmitting addition, deletions, and revisions to Maryland's State Implementation Plan, pertaining to volatile organic compound regulations in Maryland's air quality regulations, Code of Maryland Administrative Regulations (COMAR) 26.11.

(B) The following revisions to the provisions of COMAR 26.11, adopted by the Secretary of the Environment on January 20, 1992, effective February 17, 1992:

(*1*) Amendments to COMAR 26.1.01.01DD, the definition for the term volatile organic compound.

(*2*) Amendments to COMAR 26.11.01.04C, pertaining to emission test methods, including the addition of Methods 1006, 1007, and 1008 contained in Supplement 1 (July 1, 1991) to ''Technical Memorandum 91–01, Test Methods and Equipment Specifications for Stationary Sources'' (January 1991), and revisions to Method 1000 and Appendixes A and B contained in Supplement 1.

(*3*) Amendments to COMAR 26.11.19.02D, pertaining to test methods for coatings and adhesives containing volatile organic compounds.

(*4*) Amendments to COMAR 26.11.19.09B, pertaining to emission standards for volatile organic compound metal cleaning.

(*5*) Amendments to COMAR 26.11.19.12F(3) and (4), pertaining to compliance determinations for petroleum solvent dry cleaning installations.

(ii) Additional material.

(A) Remainder of the April 2, 1992 State submittal pertaining to COMAR 26.11.01.01DD, COMAR 26.11.01.04C, Appendixes A and B and Methods 1002, 1006, 1007, and 1008 contained in Supplement 1 (July 1, 1991) to ''Technical Memorandum 91–01, Test Methods and Equipment Specifications for Stationary Sources'' (January 1991), COMAR 26.11.19.02D, COMAR 26.11.19.09B, and COMAR 26.11.19.12F(3) and (4).

(105) Revisions to the Maryland State Implementation Plan submitted on January 18, 1993 by the Maryland Department of the Environment:

(i) Incorporation by reference.

(A) Letter of January 18, 1993 from the Maryland Department of the Environment transmitting addition, deletions, and revisions to Maryland's State Implementation Plan, pertaining to volatile organic compound regulations in Maryland's air quality regulations, Code of Maryland Administrative Regulations (COMAR) 26.11.

(B) The following revisions to the provisions of COMAR 26.11, adopted by the Secretary of the Environment on January 18, 1993, effective February 15, 1993:

(*1*) Amendments to COMAR 26.11.01.04C, pertaining to emission test methods, including the addition of Methods 1009, 1011, and 1012 contained in Supplement 2 (July 1, 1992) to ''Technical Memorandum 91–01, Test Methods and Equipment Specifications for Stationary Sources'' (January 1991), and revisions to Method 1003 and Appendix B contained in Supplement 2.

(*2*) Amendments to COMAR 26.11.13.05B(2) and C(2), pertaining to compliance determinations for tank trucks.

(*3*) Amendments to COMAR 26.11.19.07A(4), the definition for the term ultraviolet curable coating.

(ii) Additional material.

(A) Remainder of the January 18, 1993 State submittal pertaining to COMAR 26.11.01.04C, Appendix B and Methods 1003, 1009, 1011, and 1012 contained in Supplement 2 (July 1, 1992) to ''Technical Memorandum 91–01, Test Methods and Equipment Specifications for Stationary Sources (January 1991), COMAR 26.11.13.05B(2) and C(2), and COMAR 26.11.19.07A(4).

(106) Revisions to the Maryland Regulations submitted on September 18, 1991 by the Maryland Department of the Environment.

(i) Incorporation by reference.

(A) Letter of September 18, 1991 from the Maryland Department of the Environment transmitting the continuous emission monitoring revision.

(B) Definition amendments to Code of Maryland Administrative Regulations (COMAR) 26.11.01.01, excluding paragraph E–1, and new regulations COMAR 26.11.01.10 Continuous Emission Monitoring Requirements, concerning continuous opacity monitoring, effective July 22, 1991.

(ii) Additional materials.

(A) Remainder of September 23, 1991 State submittal.

(107) Revisions to the Maryland State Implementation Plan submitted on January 18, 1993, by the Maryland Department of the Environment:

(i) Incorporation by reference.

(A) Letter of January 18, 1993, from the Maryland Department of the Environment transmitting additions to Maryland's State Implementation Plan, pertaining to volatile organic compound regulations in Maryland's air quality regulations, Code of Maryland Administrative Regulations (COMAR) 26.11.

(B) The addition of COMAR 26.11.24, Stage II Vapor Recovery at Gasoline Dispensing Facilities, adopted by the Secretary of the Environment on January 18, 1993, effective February 15, 1993.

(ii) Additional material.

(A) Remainder of the January 18, 1993, State submittal pertaining to COMAR 26.11.24, Stage II Vapor Recovery at Gasoline Dispensing Facilities.

(108) Revisions to the Code of Maryland Administrative Regulations (COMAR) submitted on March 30, 1987 by the Maryland Department of Health and Mental Hygiene:

(i) Incorporation by reference.

(A) Letter of March 30, 1987 from the Maryland Department of Health and Mental Hygiene transmitting revisions to the Maryland State Implementation Plan (SIP).

(B) Revised COMAR 10.18.02.03H. (Action on an Application for a Permit and for Approval of a PSD Source or NSINA) (currently COMAR 26.11.02.10C.), effective March 24, 1987.

(ii) Additional material.

(A) Remainder of the March 30, 1987 State submittal pertaining to COMAR 10.18.02.03H. (currently COMAR 26.11.02.10C.).

(109) Revisions to the State of Maryland Regulations State Implementation Plan submitted on November 13, 1992 by the Maryland Department of the Environment:

(i) Incorporation by reference.

(A) Letter of November 13, 1992 from Maryland Department of the Environment transmitting a revised regulation to require major sources of volatile organic compounds and oxides of nitrogen, Statewide, to certify their emissions annually.

(B) Revisions to Title 26, COMAR 26.11.01, specifically to amend regulation .01, and to add regulation .05–1. Effective on December 7, 1992.

(ii) Additional material.

(A) Remainder of December 7, 1992 State submittal.

(110) Revisions to the Maryland State Implementation Plan submitted on April 5, 1991 by the Maryland Department of the Environment:

(i) Incorporation by reference.

(A) Letter of April 5, 1991 from the Maryland Department of the Environment transmitting additions, deletions, and revisions to Maryland's State Implementation Plan, pertaining to volatile organic compound regulations in Maryland's air quality regulations, Code of Maryland Administrative Regulations (COMAR) 26.11.

(B) The addition of COMAR 26.11.13.04, pertaining to loading operations, adopted by the Secretary of the Environment on March 9, 1991, effective May 8, 1991.

(ii) Additional material.

(A) Remainder of April 5, 1991 State submittal pertaining to COMAR 26.11.13.04, loading operations.

(111) Revisions to the Maryland State Implementation Plan submitted on April 2, 1992 by the Maryland Department of the Environment:

(i) Incorporation by reference.

(A) Letter of April 2, 1992 from the Maryland Department of the Environment transmitting additions, deletions, and revisions to Maryland's State Implementation Plan, pertaining to volatile organic compound regulations in Maryland's air quality regulations, COMAR 26.11.

(B) Revisions to COMAR 26.11.13.04A(3), pertaining to test procedures for bulk gasoline terminals, adopted by the Secretary of the Environment on January 20, 1992, effective February 17, 1992.

(ii) Additional material.

(A) Remainder of April 2, 1992 State submittal pertaining to COMAR 26.11.13.04A(3), test procedures for bulk gasoline terminals.

(112) Revisions to the Maryland State Implementation Plan submitted on January 18, 1993 by the Maryland Department of the Environment:

(i) Incorporation by reference.

(A) Letter of January 18, 1993 from the Maryland Department of the Environment transmitting additions, deletions, and revisions to Maryland's State Implementation Plan, pertaining to volatile organic compound regulations in Maryland's air quality regulations, COMAR 26.11.

(B) Revisions to COMAR 26.11.13.04A(3), pertaining to test procedures for bulk gasoline terminals, adopted by the Secretary of the Environment on January 18, 1993, effective February 15, 1993.

(ii) Additional material.

(A) Remainder of January 18, 1993 State submittal pertaining to COMAR 26.11.13.04A(3), test procedures for bulk gasoline terminals.

(113) Revisions to the Maryland State Implementation Plan submitted on June 8, 1993 by the Maryland Department of the Environment:

(i) Incorporation by reference.

(A) Letter of June 8, 1993 from the Maryland Department of the Environment transmitting additions, deletions, and revisions to Maryland's State Implementation Plan, pertaining to volatile organic compound regulations in Maryland's air quality regulations, COMAR 26.11.

(B) The following revisions to the provisions of COMAR 26.11, adopted by the Secretary of the Environment on March 26, 1993, effective April 26, 1993:

(1) Amendments to COMAR 26.11.11.02B and C, pertaining to asphalt paving.

(2) Amendments to COMAR 26.11.13.01B(1), the definition for the term bulk gasoline plant.

(3) Amendments to COMAR 26.11.13.02, pertaining to applicability and exemptions.

(4) Amendments to COMAR 26.11.13.04, pertaining to loading operations.

(5) The addition of new COMAR 26.11.13.07, pertaining to plans for compliance.

(6) Amendments to COMAR 26.11.19.01B(4), the definition for the term major stationary source of VOC.

(7) Amendments to COMAR 26.11.19.02A, F, and H, pertaining to applicability, reporting and recordkeeping, and plans for compliance, respectively.

(8) Amendments to COMAR 26.11.19.10, pertaining to graphic arts.

(ii) Additional material.

(A) Remainder of June 8, 1993 State submittal pertaining to COMAR 26.11.11.02B and C, COMAR 26.11.13.01B(1), COMAR 26.11.13.02, COMAR 26.11.13.04, COMAR 26.11.13.07, COMAR 26.11.19.01B(4), COMAR 26.11.19.02A, F, and H, and COMAR 26.11.19.10.

(114) Revisions to the Maryland State Implementation Plan submitted on July 19, 1993 by the Maryland Department of the Environment:

(i) Incorporation by reference.

(A) Letter of July 19, 1993 from the Maryland Department of the Environment transmitting additions, deletions, and revisions to Maryland's State Implementation Plan, pertaining to volatile organic compound regulations in Maryland's air quality regulations, COMAR 26.11.

(B) Revisions to COMAR 26.11.13.04A, pertaining to bulk gasoline terminals,

adopted by the Secretary of the Environment on June 25, 1993, effective July 19, 1993.

(ii) Additional material.

(A) Remainder of July 19, 1993 State submittal pertaining to COMAR 26.11.13.04A, bulk gasoline terminals.

(115)–(116) [Reserved]

(117) The carbon monoxide redesignation request and maintenance plan for the Baltimore Carbon Monoxide nonattainment area, submitted by the Maryland Department of the Environment on September 20, 1995, as part of the Maryland SIP. The emission inventory projections are included in the maintenance plan.

(i) Incorporation by reference.

(A) Letter of September 20, 1995 from the Maryland Department of the Environment requesting the redesignation and submitting the maintenance plan.

(B) The ten year carbon monoxide maintenance plan for the Baltimore Carbon Monoxide nonattainment area adopted on August 31, 1995.

(ii) Additional material.

(A) Remainder of September 20, 1995 State submittal.

(118) The carbon monoxide redesignation and maintenance plan for the Counties of Montgomery and Prince George, Maryland submitted by the Maryland Department of the Environment on October 12, 1995, as part of the Maryland SIP. The emission inventory projections are included in the maintenance plan.

(i) Incorporation by reference.

(A) Letter of October 12, 1995 from the Maryland Department of the Environment requesting the redesignation and submitting the maintenance plan.

(B) Maintenance Plan for the Maryland portion of the Metropolitan Washington Carbon Monoxide Nonattainment Area adopted on September 20, 1995.

(ii) Additional material.

(A) Remainder of October 12, 1995 State submittal.

(119) Revisions to the Code of Maryland Administrative Regulations for prevention of significant deterioration submitted on July 17, 1995 by the Maryland Department of the Environment:

(i) Incorporation by reference.

(A) Letter of July 17, 1995 from the Maryland Department of the Environment transmitting revisions to the Maryland State Implementation Plan.

(B) Amendments to regulations 26.11.01.01, 26.11.02.10 (C)(9) and 26.11.06.14 under the Code of Maryland Administrative Regulations (COMAR) revising Maryland's prevention of significant deterioration program to incorporate changes to 40 CFR 52.21 made between 1992 and 1993. The amendments were effective on May 8, 1995 in the State of Maryland.

(ii) Additional material.

(A) Remainder of July 17, 1995 State of Maryland submittal.

[37 FR 10870, May 31, 1972]

EDITORIAL NOTE: For FEDERAL REGISTER citations affecting § 52.1070, see the List of CFR Sections Affected in the Finding Aids section of this volume.

§ 52.1071 Classification of regions.

The Maryland plans were evaluated on the basis of the following classifications:

Air quality control region	Pollutant				
	Particulate matter	Sulfur oxides	Nitrogen dioxide	Carbon monoxide	Ozone
Cumberland-Keyser Interstate	I	I	III	III	III
Central Maryland Intrastate	II	II	III	III	III
Metropolitan Baltimore Intrastate	I	I	I	I	I
National Capital Interstate	I	I	III	I	I
Southern Maryland Intrastate	III	III	III	III	III
Eastern Shore Intrastate	II	III	III	III	III

[37 FR 10870, May 31, 1972, as amended at 39 FR 16346, May 8, 1974; 45 FR 53475, Aug. 12, 1980]

§52.1072 [Reserved]

§52.1073 Approval status.

(a) With the exceptions set forth in this subpart, the Administrator approves Maryland's plans for the attainment and maintenance of the national standards.

(b) With the exceptions set forth in this subpart, the Administrator approves the amendment to Regulation 10.18.01 sections .01, .07, and .11, Regulation 10.18.04 and 10.18.05 section .03D, .03F, .03H, .06I of Maryland's plan for the attainment and maintenance of the national standards under section 110 of the Clean Air Act. Furthermore, the Administrator finds that portions of the plan, as submitted January 19, 1979, satisfy the requirements of part D, title 1, of the Clean Air Act as amended in 1977.

In addition, continued satisfaction of the requirements of Part D for the ozone portion of the SIP depends on the adoption and submittal of RACT requirements by July 1, 1980, for the sources covered by CTGs issued between January 1978 and January 1979 and adoption and submittal by each subsequent January of additional RACT requirements for sources covered by CTGs issued by the previous January.

(c) Code of Maryland Air Regulations (COMAR) 26.11.13.06 is approved with the following exception:

(i) Distributors and retailers of gasoline-ethanol blends as defined by 40 CFR 80.27(d)(2) are subject to the provisions of 40 CFR 80.27(d)(1) through 40 CFR 80.27(d)(3).

(d) Letter of November 13, 1993, from the Maryland Department of the Environment transmitting a commitment to adopt either the Federal clean fuel fleet program or an alternative substitute program by May 15, 1994.

[38 FR 33716, Dec. 6, 1973, as amended at 45 FR 53475, Aug. 12, 1980; 47 FR 20128, May 11, 1982; 56 FR 23808, May 24, 1991; 58 FR 50848, Sept. 29, 1993; 61 FR 16061, Apr. 11, 1996]

§52.1074 Legal authority.

(a) The requirements of §51.230(f) of this chapter are not met, since section 698(f) of the Maryland Air Quality Control Act could, in some circumstances, prohibit the disclosure of emission data to the public. Therefore, section 698(f) is disapproved.

[39 FR 34536, Sept. 26, 1974, and 47 FR 20128, May 11, 1982, as amended at 51 FR 40676, Nov. 7, 1986]

§52.1075 1990 base year emission inventory for carbon monoxide.

(a) EPA approves as a revision to the Maryland State Implementation Plan the 1990 base year emission inventory for the Baltimore Metropolitan Statistical Area, submitted by the Secretary, Maryland Department of the Environment, on September 20, 1995. This submittal consists of the 1990 base year stationary, area, off-road mobile and on-road mobile emission inventories in the Baltimore Metropolitan Statistical Area for the pollutant, carbon monoxide (CO).

(b) EPA approves as a revision to the Maryland Implementation Plan the 1990 base year emission inventory for the Washington Metropolitan Statistical Area, submitted by Secretary, Maryland Department of the Environment, on March 21, 1994 and October 12, 1995. This submittal consist of the 1990 base year stationary, area and off-road mobile and on-road mobile emission inventories in the Washington Statistical Area for the pollutant, carbon monoxide (CO).

[60 FR 55326, Oct. 31, 1995, as amended at 61 FR 2937, Jan. 30, 1996]

§52.1076 [Reserved]

§52.1077 Source surveillance.

(a) The requirements of §51.212 of this chapter are not met since the plans do not provide specific procedures for stationary sources to be periodically tested.

[37 FR 10870, May 31, 1972, as amended at 47 FR 20128, May 11, 1982; 51 FR 40677, Nov. 7, 1986]

§52.1078 [Reserved]

§52.1079 Requirements for state implementation plan revisions relating to new motor vehicles.

Maryland must comply with the requirements of §51.120.

[60 FR 4737, Jan. 24, 1995]

§ 52.1080 Photochemical Assessment Monitoring Stations (PAMS) Program.

On March 24, 1994 Maryland's Department of the Environment submitted a plan for the establishment and implementation of a Photochemical Assessment Monitoring Stations (PAMS) Program as a state implementation plan (SIP) revision, as required by section 182(c)(1) of the Clean Air Act. EPA approved the Photochemical Assessment Monitoring Stations (PAMS) Program on September 11, 1995 and made it part of Maryland SIP. As with all components of the SIP, Maryland must implement the program as submitted and approved by EPA.

[60 FR 47084, Sept. 11, 1995]

§§ 52.1081—52.1109 [Reserved]

§ 52.1110 Small business stationary source technical and environmental compliance assistance program.

On November 13, 1992, the Acting Director of the Air and Radiation Management Administration, Maryland Department of the Environment submitted a plan for the establishment and implementation of a Small Business Stationary Source Technical and Environmental Compliance Assistance Program as a state implementation plan (SIP) revision, as required by title V of the Clean Air Act Amendments. EPA approved the Small Business Stationary Source Technical and Environmental Compliance Assistance Program on May 16, 1994, and made it part of the Maryland SIP. As with all components of the SIP, Maryland must implement the program as submitted and approved by EPA.

[59 FR 25333, May 16, 1994]

§§ 52.1111—52.1112 [Reserved]

§ 52.1113 General requirements.

(a) The requirements of § 51.116(c) of this chapter are not met, since sections 10.03.35.11I and 10.03.35.10A of the Maryland Regulations governing the control of Air Pollution could, in some circumstances, prohibit the disclosure of emission datato the public. Therefore, regulations 10.03.35.11I and 10.03.35.10A are disapproved.

(b) *Regulation for public availability of emission data.* (1) Any person who cannot obtain emission data from the Agency responsible for making emission data available to the public, as specified in the applicable plan, concerning emissions from any source subject to emission limitations which are part of the approved plan may request that the appropriate Regional Administrator obtain and make public such data. Within 30 days after receipt of any such written request, the Regional Administrator shall require the owner or operator of any such source to submit information within 30 days on the nature and amounts of emissions from such source and any other information as may be deemed necessary by the Regional Administrator to determine whether such source is in compliance with applicable emission limitations or other control measures that are part of the applicable plan.

(2) Commencing after the initial notification by the Regional Administrator pursuant to paragraph (b)(1) of this section, the owner or operator of the source shall maintain records of the nature and amounts of emissions from such source and any other information as may be deemed necessary by the Regional Administrator to determine whether such source is in compliance with applicable emission limitations or other control measures that are part of the plan. The information recorded shall be summarized and reported to the Regional Administrator, on forms furnished by the Regional Administrator, and shall be submitted within 45 days after the end of the reporting period. Reporting periods are January 1 to June 30 and July 1 to December 31.

(3) Information recorded by the owner or operator and copies of this summarizing report submitted to the Regional Administrator shall be retained by the owner or operator for 2 years after the date on which the pertinent report is submitted.

(4) Emission data obtained from owners or operators of stationary sources will be correlated with applicable emission limitations and other control measures that are part of the applicable plan and will be available at the appropriate regional office and at other locations in the state designated by the Regional Administrator.

[39 FR 34536, Sept. 26, 1974, as amended at 40 FR 55329, Nov. 28, 1975; 52 FR 40676, Nov. 7, 1987]

§52.1114—52.1115 [Reserved]

§52.1116 Significant deterioration of air quality.

(a) The requirements of sections 160 through 165 of the Clean Air Act are not met, since the plan does not include approvable procedures for preventing the significant deterioration of air quality.

(b) The following provisions of 40 CFR 52.21 are hereby incorporated and made a part of the applicable State plan for the State of Maryland.

(1) Definition of federally enforceable (40 CFR 52.21(b)(17)),

(2) Exclusions from increment consumption (40 CFR 52.21(f)(1)(v), (3), (4)(i)),

(3) Redesignation of areas (40 CFR 52.21(g) (1), (2), (3), (4), (5), and (6)),

(4) Approval of alternate models (40 CFR 52.21(1)(2)),

(5) Disputed permits or redesignation (40 CFR 52.21(t), and

(6) Delegation of Authority (40 CFR 52.21(u)(1), (2)(ii), (3), and (4)).

[45 FR 52741, Aug. 7, 1980 and 47 FR 7835, Feb. 23, 1982]

§52.1117 Control strategy: Sulfur oxides.

(a) [Reserved]

(b) The requirements of §51.112(a) of this chapter are not met because the State did not submit an adequate control strategy demonstration to show that the Maryland Regulation 10.03.36.04B (1) and (2) would not interfere with the attainment and maintenance of the national sulfur dioxide standards.

[40 FR 56889, Dec. 5, 1975, as amended at 41 FR 8770, Mar. 1, 1976; 41 FR 54747, Dec. 15, 1976; 51 FR 40676, Nov. 7, 1986]

§52.1118 Approval of bubbles in nonattainment areas lacking approved demonstrations: State assurances.

In order to secure approval of a bubble control strategy for the American Cyanamid facility in Havre de Grace, Maryland (see paragraph 52.1070(c)(87)), the Maryland Department of the Environment—Air Management Administration provided certain assurances in a letter dated September 13, 1988 from George P. Ferreri, Director, to Thomas J. Maslany, Director, Air Management Division, EPA Region III. The State of Maryland assured EPA it would:

(a) Include the bubble emission limits for this plant in any new State Implementation Plan,

(b) Consider this plant with its approved bubble limits in reviewing sources for needed additional emission reductions, and

(c) Not be delayed in making reasonable efforts to provide the necessary schedules for completing the new ozone attainment plan.

[55 FR 20272, May 16, 1990]

Subpart W—Massachusetts

§52.1119 Identification of plan—conditional approval.

(a) The following plan revisions were submitted on the dates specified.

(1) On November 13, 1992, the Massachusetts Department of Environmental Protection submitted a small business stationary source technical and environmental compliance assistance program (PROGRAM). On July 22, 1993, Massachusetts submitted a letter clarifying portions of the November 13, 1992 submittal. In these submissions, the State commits to submit adequate legal authority to establish and implement a compliance advisory panel and to have a fully operational PROGRAM by November 15, 1994.

(i) Incorporation by reference.

(A) Letter from the Massachusetts Department of Environmental Protection dated November 13, 1992 submitting a revision to the Massachusetts State Implementation Plan.

(B) State Implementation Plan Revision for a Small Business Technical and Environmental Compliance Assistance Program dated November 13, 1992.

(ii) Additional materials.

(A) Letter from the Massachusetts Department of Environmental Protection dated July 22, 1993 clarifying portions of Massachusetts' November 13, 1992 SIP revision.

[59 FR 41708, Aug. 15, 1994]

§ 52.1120 Identification of plan.

(a) Title of plan: ''Plan for Implementation, Maintenance, and Enforcement of National Primary and Secondary Ambient Air Quality Standards.''

(b) The plan was officially submitted on January 27, 1972.

(c) The plan revisions listed below were submitted on the dates specified.

(1) Emergency episode regulations submitted on February 22, 1972, by the Bureau of Air Quality Control, Massachusetts Department of Public Health.

(2) Miscellaneous non-regulatory changes to the plan, wording changes in regulations 2.5 and 2.1 and clarification of Regulations 2.5.1 through 2.5.4 submitted on April 27, 1972, by the Division of Environmental Health, Massachusetts Department of Public Health.

(3) Miscellaneous non-regulatory additions to the plan submitted on May 5, 1972, by the Bureau of Air Quality Control, Massachusetts Department of Public Health.

(4) Miscellaneous changes affecting regulations 2.1, 2.5, 4.2, 4.5.1, 5.6.1, 6.1.2, 6.3.1, 8.1.6, 9.1, 15.1, 51.2, 52.1 and 52.2 of the regulations for all six Air Pollution Control Districts submitted on August 28, 1972 by the Governor.

(5) Letter of concurrence on AQMA identifications submitted on July 23, 1974, by the Governor.

(6) Revision to Regulation No. 5, increasing allowable sulfur content of fuels in the Boston Air Pollution Control District submitted on July 11, 1975, by the Secretary of Environmental Affairs, and on April 1, 1977 and April 20, 1978 by the Commissioner of the Massachusetts Department of Environmental Quality Engineering.

(7) Revision to Regulation 50—Variances, Regulations for Control of Air Pollution in the six Massachusetts Air Pollution Control Districts, submitted by letter dated November 14, 1974, by the Governor.

(8) Regulation 5.1, Sulfur Content of Fuels and Control Thereof, for the Merrimack Valley Air Pollution Control District submitted on January 28, 1976 by the Secretary of Environmental Affairs and on August 22, 1977 by the Commissioner of the Department of Environmental Quality Engineering, and additional technical information pertinent to the Haverhill Paperboard Corp., Haverhill, Mass., submitted on December 30, 1976 by the Secretary of Environmental Affairs.

(9) Regulation 5.1, Sulfur Content of Fuels and Control Thereof, for the Pioneer Valley Air Pollution Control District submitted on July 22, 1976 by the Secretary of Environmental Affairs and on August 22, 1977 by the Commissioner of the Department of Environmental Quality Engineering, and additional technical information pertinent to Deerfield Specialty Papers, Inc., Monroe, Mass., submitted on December 27, 1977 by the Commissioner of the Massachusetts Department of Environmental Quality Engineering.

(10) Regulation 5.1, Sulfur Content of Fuels and Control Thereof, for the Central Massachusetts Air Pollution Control District submitted on June 25, 1976 by the Secretary of Environmental Affairs and on August 22, 1977 by the Commissioner of the Department of Environmental Quality Engineering.

(11) Regulation 5.1, Sulfur Content of Fuels and Control Thereof, for the Central Massachusetts Air Pollution Control District (revised and adopted by the Massachusetts Department of Environmental Quality Engineering on March 29, 1976, with specificprovisions for the City of Fitchburg) submitted on June 25, 1976, by the Secretary of Environmental Affairs.

(12) A revision to Regulation 5.1, Sulfur Content of Fuels and Control Thereof, for the Southeastern Massachusetts Air Pollution Control District, submitted on December 30, 1976 by the Secretary of Environmental Affairs and on January 31, 1978 by the Commissioner of the Massachusetts Department of Environmental Quality Engineering.

(13) A revision to Regulation 5.1, Sulfur Content of Fuels and Control Thereof, for the Berkshire Air Pollution Control District, submitted by the

Commissioner of the Massachusetts Department of Environmental Quality Engineering on April 14, 1977, and additional technical information submitted on August 11, 1978, pertaining to the Schweitzer Division, Kimberly-Clark Corporation, Columbia Mill, Lee, and on August 31, 1978, pertaining to Crane and Company, Inc., Dalton.

(14) Revisions to ''Regulations for the Prevention and/or Abatement of Air Pollution Episode and Air Pollution Incident Emergencies,'' submitted on September 15, 1976 by the Commissioner of the Massachusetts Department of Environmental Quality Engineering.

(15) A revision to Regulation 2.5, Compliance with Emission Limitations, and to Regulation 16, Reduction of Single Passenger Commuter Vehicle Use, for the Pioneer Valley Air Pollution Control District, submitted on May 20, 1977, by the Acting Commissioner of the Executive Office of Environmental Affairs, Department of Environmental Quality Engineering.

(16) Revision to regulation 7 and regulation 9, submitted on December 9, 1977, by the Commissioner of the Massachusetts Department of Environmental Quality and Engineering.

(17) Revision to Regulations 310 CMR 7.05, Sulfur-in-Fuel, and 310 CMR 7.06, Visible Emissions, allowing burning of a coal-oil slurry at New England Power Company, Salem Harbor Station, Massachusetts, submitted on July 5, 1978 by the Commissioner, Massachusetts Department of Environmental Quality Engineering and an extension to 310 CMR 7.06, *Visible Emissions*, submitted on December 28, 1979.

(18) Revision to Regulation 7.02(11) (formerly Regulation 2.5.3)—Emission Limitation to Incinerators, submitted February 1, 1978 by the Commissioner of the Massachusetts Department of Environmental Quality Engineering.

(19) The addition of Regulation 7.17, for the Southeastern Massachusetts Air Pollution Control District, Coal Conversion—Brayton Point Station, New England Power Company, submitted by the Commissioner of the Massachusetts Department of Environmental Quality Engineering on September 7, 1978. Compliance with this revision shall be determined by methods consistent with New Source Performance Standards, proposed Test Method 19, as stated in a letter dated February 8, 1979 from Kenneth Hagg of the Massachusetts Department of Environmental Quality Engineering to Frank Ciavattieri of the Environmental Protection Agency.

(20) A revision permanently extending Regulation 310 CMR 7.05(1) (formerly Regulation 5.1) ''Sulfur Content of Fuels and Control Thereof'' and a revision for the Metropolitan Boston APCD, and Merrimack Valley APCD submitted on December 28, 1978, by the Commissioner of the Massachusetts Department of Environmental Quality Engineering.

(21) A revision permanently extending Regulation 310 CMR 7.05(1) (formerly Regulation 5.1), ''Sulfur Content of Fuels and Control Thereof'' and a revision to Regulation 310 CMR 7.05(4) ''Ash Content of Fuels'' for the Pioneer Valley Air Pollution Control District, submitted on January 3, 1979 by the Acting Commissioner of the Massachusetts Department of Environmental Quality Engineering.

(22) A revision permanently extending Regulation 310 CMR 7.05(1) (formerly Regulation 5.1), ''Sulfur Content of Fuels and Control Thereof'' for the Southeastern Massachusetts APCD, submitted on January 31, 1979 by the Commissioner of the Massachusetts Department of Environmental Quality Engineering.

(23) A revision to Regulation 310 CMR 7.05(4) ''Ash Content of Fuels'' for the Metropolitan Boston Air Pollution Control District, submitted on July 20, 1978 by the Commissioner of the Massachusetts Department of Environmental Quality Engineering.

(24) A revision permanently extending Regulation 310 CMR 7.05(1) (formerly Regulation 5.1) ''Sulfur Content of Fuels and Control Thereof'' for the Central Massachusetts APCD, submitted on March 2, 1979 by the Commissioner of the Massachusetts Department of Environmental Quality Engineering, and a revision removing the seasonal restriction in Fitchburg for Fitchburg Paper Company (55 meter stacks only) and James River-Massachusetts submitted on September 28, 1979 by the Commissioner.

(25) On March 30, 1979 and on April 23, 1979 the Commissioner of the Massachusetts Department of Environmental Quality Engineering submitted the non-attainment area plan for Total Suspended Particulates (TSP) in Worcester, miscellaneous statewide regulation changes, and an extension request for the attainment of TSP secondary standards for areas designated non-attainment as of March 3, 1978.

(26) On May 3, 1979, August 7, 1979, and April 17, 1980, the Commissioner of the Massachusetts Department of Environmental Quality Engineering submitted a revision entitled ''Massachusetts Implementation Plan, Amended Regulation—All Districts, New Source Review Element,'' relating to construction and operation of major new or modified sources in non-attainment areas.

(27) Revisions to Regulation 310 CMR 7.07, Open Burning, submitted on September 28, 1979 by the Commissioner of the Massachusetts Department of Environmental Quality Engineering.

(28) Revision to the state ozone standard and adoption of an ambient lead standard was submitted by Thomas F. McLoughlin, Acting Commissioner of the Department of Environmental Quality Engineering on August 21, 1979.

(29) A revision varying the provisions of Regulation 310 CMR 7.04(5), Fuel Oil Viscosity, for Cambridge Electric Light Company's Kendall Station, First Street, Cambridge, and Blackstone Station, Blackstone Street, Cambridge, submitted on December 28, 1978 by the Commissioner of the Massachusetts Department of Environmental Quality Engineering.

(30) Attainment plans to meet the requirements of Part D for carbon monoxide and ozone and other miscellaneous provisions were submitted by the Governor of Massachusetts on December 31, 1978 and on May 16, 1979 by the Acting Commissioner of the Department of Environmental Quality Engineering. Supplemental information was submitted on September 19, November 13 and December 7, 1979; and March 20 and April 7, 1980 by DEQE.

(31) A temporary variance to the Provisions of Regulation 310 CMR 7.05, Sulfur Content of Fuels and Control Thereof, for Seaman Paper Company, Otter River. Submitted on March 20, 1980 by the Commissioner of the Massachusetts Department of Environmental Quality Engineering.

(32) A revision to Regulation 7.05(1) ''Sulfur Content of Fuels and Control Thereof'' for the Metropolitan Boston APCD submitted on November 27, 1979 by the Commissioner of the Department of Environmental Quality Engineering.

(33) A revision to Regulation 310 CMR 7.05(1) (formerly Regulation 5.1) ''Sulfur Content of Fuels and Control Thereof'' for the Pioneer Valley Air Pollution Control District submitted by the Commissioner of the Massachusetts Department of Environmental Quality Engineering on March 2, 1979 and May 5, 1981.

(34) A revision to Regulation 7.05(1) ''Sulfur Content of Fuels and Control Thereof'' for the Metropolitan Boston APCD submitted on April 25, 1980 by the Commissioner of the Department of Environmental Quality Engineering.

(35) On January 5, 1981, the Acting Director of the Division of Air Quality Control, Massachusetts Department of Environmental Quality Engineering submitted a revision entitled ''Appendix J Transportation Project Level Guidelines'' relating to policy guidance on the preparation of air quality analysis for transportation projects.

(36) A comprehensive air quality monitoring plan, intended to meet requirements of 40 CFR part 58, was submitted by the Commissioner of the Department of Environmental Quality Engineering on January 28, 1980.

(37) A revision submitted by the Commissioner of the Massachusetts Department of Environmental Quality Engineering on September 12, 1980 adding a new regulation 310 CMR 7.19 ''Interim Sulfur-in-Fuel Limitations for Fossil Fuel Utilization Facilities Pending Conversion to an Alternate Fuel or Implementation of Permanent Energy Conservation Measures.''

(38) A variance of Regulation 310 CMR 7.05(1)(d)(2) ''Sulfur Control of Fuels and Control Thereof'' for the Metropolitan Boston Air Pollution Control District, submitted on November 25, 1980, by the Commissioner of the

Massachusetts Department of Environmental Quality Engineering.

(39) Revisions to meet the requirements of Part D and certain other sections of the Clean Air Act, as amended, for making a commitment to public transportation in the Boston urban region which were submitted on July 9, 1981 and on July 30, 1981.

(40) Regulations 310 CMR (14), (15), and (16), for paper, fabric, and vinyl surface coaters to meet the requirements of Part D for ozone were submitted by the Governor of Massachusetts on March 6, 1981.

(41) A revision to Regulation 7.05(1)(c) ''Sulfur Content of Fuels Control Thereof for the Merrimack Valley Air Pollution Control District'' allowing the burning of higher sulfur content fuel oil at Haverhill Paperboard Corporation, Haverhill.

(42) Regulation 310 CMR 7.18(2)(b), to allow existing surface coating lines regulated under 310 CMR 7.18 (4), (5), (6), (7), (10), (11), (12), (14), (15) and (16) to bubble emissions to meet the requirements of Part D for ozone was submitted by the Governor on March 6, 1981, and a letter clarifying state procedures was submitted on November 12, 1981. The emission limitations required by the federally-approved portion of 310 CMR 7.18 are the applicable requirements of the Massachusetts SIP for the purpose of section 113 of the Clean Air Act and shall be enforceable by EPA and by citizens in the same manner as other requirements of the SIP; except that emission limitations adopted by the state under and which comply with 310 CMR 7.18(2)(b) and the procedures set out in the letter of November 12, 1981 shall be the applicable requirements of the Massachusetts SIP in lieu of those contained elsewhere in 310 CMR 7.18 and shall be enforceable by EPA and by citizens.

(43) A revision to Regulation 7.05(1)(d) ''Sulfur Content of Fuels and Control Thereof for the Metropolitan Boston Air Pollution Control District'' allowing the burning of higher sulfur content fuel oil at Eastman Gelatine Corporation, Peabody, submitted on September 24, 1981 by the Commissioner of the Massachusetts Department of Environmental Quality Engineering.

(44) The Massachusetts Department of Environmental Quality Engineering submitted an updated VOC emissions inventory on September 3, 1981, and the procedures to annually update this inventory on November 4, 1981.

(45) A revision to Regulation 7.05(1)(e) ''Sulfur Content of Fuels and Control Thereof for the Pioneer Valley Air Pollution Control District'' allowing the burning of higher sulfur content fuel oil at the Holyoke Gas and Electric Department, Holyoke.

(46) A revision submitted on December 29, 1981 by the Commissioner of the Massachusetts Department of Environmental Quality Engineering allowing the burning of higher sulfur content fuel oil at the ATF Davidson Company, Northbridge, until December 1, 1983.

(47) Regulation 310 CMR 7.18(10) for metal coil coating was submitted on June 24, 1980 by the Commissioner of the Department of Environmental Quality Engineering, in order to meet Part D requirements for ozone.

(48) Regulations 310 CMR 7.18(11), Surface Coating of Miscellaneous Metal Parts and Products and (12), Graphic Arts—Rotogravure and Flexography with test methods; and (13) Perchloroethylene Dry Cleaning Systems without test methods, were submitted on July 21, 1981 and March 10, 1982 by the Department of Environmental Quality Engineering to meet Part D requirements for ozone attainment.

(49) A revision to Regulation 7.17 ''Conversions to Coal'' submitted by the Commissioner of the Massachusetts Department of Environmental Quality Engineering on January 22, 1982 specifying the conditions under which coal may be burned at the Holyoke Water Power Company, Mount Tom Plant, Holyoke, Massachusetts.

(50) [Reserved]

(51) A revision submitted on September 29, 1982 by the Commissioner of the Massachusetts Department of Environmental Quality Engineering allowing the burning of fuel oil having a sulfur content of 0.55 pounds per million Btu heat release potential at the Northeast Petroleum Corporation, Chelsea, Massachusetts.

(52) A revision submitted on September 28, 1982 by the Commissioner of the

Massachusetts Department of Environmental Quality Engineering allowing the burning of higher sulfur content fuel oil at the Polaroid Corporation for a period of up to 30 months commencing on December 1, 1982.

(53)(i) Attainment plans for carbon monoxide and ozone submitted by the Department of Environmental Quality Engineering on September 9, November 2 and November 17, 1982; February 2, March 21, April 7, April 26 and May 16, 1983. These revisions amend Regulations 310 CMR 7.18 (3)–(7), (9)–(16); and add Regulation 310 CMR 7.18(17), 7.20 (1)–(14), and 540 CMR 4.00.

(ii) Regulation 310 CMR 7.18(3) for the surface coating of metal furniture submitted on September 9, 1982 as part of the attainment plan identified in § 52.1120(c)(53)(i), is added to the VOC surface coating bubble Regulation 310 CMR 7.18(2)(b) identified in § 52.1120(c)(42).

(iii) Regulation 310 CMR 7.18(13) for Perchloroethylene Dry Cleaning systems submitted on September 9, 1982 as part of the attainment plan identified in section 52.1120(53)(i), is amended by adding EPA test methods to the no action identified in 52.1120(48).

(54) On February 8, 1983, the Massachusetts Department of Environmental Quality Engineering submitted a source specific emission limit in the letter of approval to the Esleeck Manufacturing Company, Inc., Montague, allowing the Company to burn fuel oil having a maximum sulfur content of 1.21 pounds per million Btu heat release potential provided the fuel firing rate does not exceed 137.5 gallons per hour.

(55) A revision to exempt the Berkshire Air Pollution Control District from Regulation 310 CMR 7.02(12)(b)2 was submitted on March 25, 1983 by Kenneth A. Hagg, Director of the Division of Air Quality Control of the Department of Environmental Quality Engineering.

(56) A revision to Regulation 310 CMR 7.02(12)(a)1(e) for petroleum liquid storage in external floating roof tanks submitted on December 2, 1983.

(57) Revisions to the State's narrative, entitled *New Source Regulations* on page 117 and 118, the regulatory definitions of BACT, NSPS and NESHAPS and Regulation 310 CMR 7.02 (2)(a)(6) and 7.02 (13), submitted by Anthony D. Cortese, Commissioner, in August, 1982 and received on September 9, 1982.

(58) Revisions to the State Implementation Plan submitted by the Massachusetts Department of Environmental Protection on June 7, 1991, November 13, 1992 and February 17, 1993.

(i) Incorporation by reference.

(A) Letters from the Massachusetts Department of Environmental Protection dated June 7, 1991, November 13, 1992 and February 17, 1993 submitting revisions to the Massachusetts State Implementation Plan.

(B) Amendments and additions to 310 CMR 7.00 submitted on June 7, 1991 and effective on April 12, 1991.

(C) Amendments and additions to 310 CMR 7.00 submitted on June 7, 1991 and effective on June 21, 1991.

(D) Addition of 310 CMR 7.24(4)(j) submitted on November 13, 1992 and February 17, 1993 and effective on February 12, 1993.

(ii) Additional materials.

(A) Nonregulatory portions of the state submittal.

(59) A revision submitted on May 3, 1983, allowing the burning of 2.2% sulfur content fuel oil at the Stanley Woolen Company, a facility in Uxbridge, Massachusetts for a period of up to 30 months, commencing on March 23, 1984.

(60) On May 27, 1982 and September 9, 1982 the Commissioner of the Massachusetts Department of Environmental Quality Engineering submitted a revised plan for new source review in nonattainment areas. The submittal included 310 CMR Appendix A, ''Emission Offsets and Nonattainment Review,'' additions to 310 CMR 7.00, ''General Definitions,'' and revisions to 310 CMR 7.02(2)(b)(4) and 7.02(2)(b)(5), ''Plan Approval and Emission Limitations.''

(61) A revision submitted on October 31, 1983, allowing the burning of 2.2% sulfur content fuel oil at the Reed and Barton Silversmiths facility in Taunton, Massachusetts for a period of up to 30 months, commencing on March 23, 1984.

(62) A revision submitted on November 16, 1983 allowing the burning of 2.2% sulfur content fuel oil at the ATF

Davidson Company in Northbridge, Massachusetts.

(63) A revision submitted on February 2, 1984, allowing the burning of 1.0% sulfur content fuel oil at The Biltrite Corporation facility in Chelsea, Massachusetts for a period of up to 30 months, commencing on June 15, 1984.

(64) A revision to the Ozone Attainment Plan was submitted by S. Russell Sylva, Commissioner of the Massachusetts Department of Environmental Quality Engineering on February 14, and May 22, 1985 to control emissions from gasoline tank trucks and bulk terminal vapor recovery systems.

(i) Incorporation by reference.

(A) Amendments to Regulations 310 CMR 7.00 and 7.02(12) (c) and (d), ''Motor Vehicle Fuel Tank Trucks'', adopted December 1984.

(B) The May 22, 1985 letter from Massachusetts DEQE, and the enforcement manual submitted and adopted on May 22, 1985, including Method 27, record form, potential leak points, major tank truck leak sources, test procedure for gasoline vapor leak detection procedure by combustible gas detector, instruction manual for Sentox 2 and Notice of Violation.

(65) A temporary variance to 310 CMR 7.05(1)(d)2 of ''Sulfur Content of Fuels and Control Thereof for Metropolitan Boston Air Pollution Control District'' submitted on January 6, 1984 to allow for the use of 2.2% sulfur content fuel oil in boiler unit 7 of the Boston Edison Company Mystic Station facility in Everett for thirty months commencing on September 25, 1984.

(66) Attainment and maintenance plans for lead, submitted on July 13 and August 17, 1984 by the Department of Environmental Quality Engineering.

(67) A revision submitted on July 11, 1984 allowing the burning of 2.2% sulfur content fuel oil at the James River Corporation Hyde Park Mill facility in Boston, Massachusetts for a period of up to 30 months, commencing on September 25, 1984.

(68) A revision submitted on February 8 and October 23, 1985 allowing the burning of 2.2% sulfur content fuel oil at the Phillips Academy facility in Andover, Massachusetts for a period of up to 30 months, commencing on April 1, 1986.

(i) Incorporation by reference. (A) Letter from Richard J. Chalpin, Acting Regional Engineer, to Phillips Academy, dated December 27, 1984 allowing the temporary use of less expensive 2.2% sulfur fuel oil (for 30 months from the date of publication), the savings from which will be used to implement permanent energy conservation measures to reduce on-site consumption of petroleum products by at least 50,000 gallons per year (estimated 82,000 gallons per year). At the end of the temporary use period, Phillips Academy will return to the use of 1.0% sulfur fuel oil. The particulate emission rate for the facility will not exceed 0.15 lbs. per million Btu.

(B) These specific requirements of Regulation 310 CMR 7.19 were agreed to in a Statement of Agreement, signed February 19, 1985.

(C) Memorandum to Donald C. Squires from Bruce K. Maillet dated October 4, 1985; subject: Response to EPA questions regarding Phillips Academy, outlines the permanent energy conservation measures to be used.

(69) Revisions to federally approved regulations 310 CMR 7.02(2)(b) and 310 CMR 7.05(4) were submitted on December 3, 1985, January 31, 1986 and February 11, 1986 by the Department of Environmental Quality Engineering.

(i) Incorporation by reference.

(A) Regulation 310 CMR 7.02(2)(b), Department of Environmental Quality Engineering, Air Pollution Control, is corrected to include the word ''major'' before the word ''modification''.

(B) Regulation 310 CMR 7.05(4), Department of Environmental Quality Engineering, Air Pollution Control, Ash Content of Fuels.

(ii) Additional materials.

(A) The nonregulatory portions of the state submittals.

(70) A revision submitted on February 19, 1986 allowing the burning of 2.2% sulfur content fuel oil at the Boston Housing Authority, Mary Ellen McCormick and Maverick Family Development facilities in Boston, Massachusetts for a period of up to 30 months, commencing on August 12, 1986.

(i) Incorporation by reference.

(A) Letters dated August 30, 1985 and July 11, 1985 for the Mary Ellen McCormick and Maverick Family Development Facilities, respectively, from Richard J. Chalpin, Acting Regional Engineer, allowing the temporary use of less expensive 2.2% sulfur fuel oil for 30 months from August 12, 1986, the savings from which will be used to implement permanent energy conservation measures to reduce the on-site consumption of the petroleum products. At the end of the temporary use period, the Boston Housing Authority, Mary Ellen McCormick and Maverick Family Development facilities will return to the use of 0.5% sulfur fuel oil. The particulate emission rate for these facilities will not exceed 0.12 lbs per million BTU.

(B) Statements of Agreement both signed October 28, 1985 by Doris Bunte, Administrator of Boston Housing Authority.

(C) Memorandum from Bruce K. Maillet to S. Russell Sylva dated January 9, 1986, subject: Decision Memo.

(71) A revision submitted on May 12, 1986 allowing the burning of 2.2% sulfur content fuel oil at the Boston Housing Authority, Mission Hill Extension Family Development facility in Boston, Massachusetts for a period of up to 30 months, commencing on November 25, 1986.

(i) Incorporation by reference.

(A) Letter dated March 5, 1986 for the Mission Hill Extension Family Development facility, from Richard J. Chalpin, Acting Regional Engineer, allowing the temporary use of less expensive 2.2% sulfur fuel oil (for 30 months from the date of publication), the savings from which will be used to implement permanent energy conservation measures to reduce the on-site consumption of petroleum products. At the end of the temporary use period, the Boston Housing Authority, Mission Hill Extension Family Development facility will return to the use of 0.5% sulfur fuel oil. The particulate emission rate for this facility will not exceed 0.12 lbs per million Btu.

(B) Statements of Agreement signed April 4, 1986 by Doris Bunte, Administrator of Boston Housing Authority.

(C) Memorandum from Bruce K. Maillet to S. Russell Sylva dated April 18, 1986, subject: Decision Memo.

(72) Revisions involving regulations 310 CMR 7.02(2)(b) 4, 5, and 6; 7.02(12)(b)3; 7.02(12)(d); and 7.14 were submitted on November 21, 1986 and January 15, 1987, by the Department of Environmental Quality Engineering (DEQE).

(i) Incorporation by reference. (A) Regulation 310 CMR 7.02(2)(b) 4, 5, and 6 are amended and became effective on February 6, 1987.

(B) Regulation 310 CMR 7.02(12)(b)3 is deleted and became effective on February 6, 1987.

(C) Regulation 310 CMR 7.02(12)(d) is amended and became effective on February 6, 1987.

(D) Regulations 310 CMR 7.14 (2) and (3) are added and became effective on February 6, 1987.

(E) The Commonwealth of Massachusetts Regulation Filing document dated January 15, 1987 is provided and states that these regulatory changes became effective on February 6, 1987.

(ii) Additional materials. The non-regulatory portions of the state submittals.

(73) Revisions to the State Implementation Plan submitted by the Commonwealth of Massachusetts on February 21, February 25, and June 23, 1986.

(i) Incorporation by reference.

(A) A letter from the Commonwealth of Massachusetts Department of Environmental Quality Engineering dated February 21, 1986 and amendments to 310 CMR 7.00 and 310 CMR 7.18 of the Regulations for the control of Air Pollution in the Berkshire, Central Massachusetts, Merrimack Valley, Metropolitan Boston, Pioneer Valley and Southeastern Massachusetts Air Pollution Control Districts.

(B) A letter from the Commonwealth of Massachusetts Department of Environmental Quality Engineering (DEQE), dated June 23, 1986 and the Implementation Guidance, 310 CMR 7.18(18), Polystyrene Resin Manufacturing, dated February 1986.

(C) A Regulation Filing and Publication document from the Commonwealth of Massachusetts Department of Environmental Quality Engineering, dated February 25, 1986.

(ii) Additional materials.

(A) Nonregulatory portions of the state submittals.

(74) Revisions to the State Implementation Plan were submitted by the Commissioner of the Department of Environmental Quality Engineering on November 5, 1986 and December 10, 1986.

(i) Incorporation by reference.

(A) Letter dated November 5, 1986 from the Massachusetts Department of Environmental Quality Engineering (DEQE) submitting revisions to the State Implementation Plan for EPA approval.

(B) Letter from the Massachusetts DEQE dated December 10, 1986, which states that the effective date of Regulations 310 CMR 7.00, ''Definitions'' and 310 CMR 7.18(19), ''Synthetic Organic Chemical Manufacture,'' is November 28, 1986.

(C) Massachusetts' Regulation 310 CMR 7.18(19) entitled, ''Synthetic Organic Chemical Manufacture,'' and amendments to 310 CMR 7.00, ''Definitions,'' effective in the Commonwealth of Massachusetts on November 28, 1986.

(ii) Additional materials.

(A) Nonregulatory portions of the State submittal.

(75) [Reserved]

(76) Revisions involving regulations 310 CMR 7.18(2)(e) and 7.18(17) submitted by the Department of Environmental Quality Engineering on September 20, 1988.

(i) Incorporation by reference.

(A) Amendment to Regulation 310 CMR 7.18(2)(e)—effective July 22, 1988.

(B) Amendments to Regulation 310 CMR 7.18(17)(d)—effective July 22, 1988.

(C) A Regulation Filing and Publication document from the Commonwealth of Massachusetts Department of Environmental Quality Engineering dated July 5, 1988 which states that the effective date of the regulatory amendments to 310 CMR 7.18(2)(e) and 310 CMR 7.18(17)(d), incorporated above, is July 22, 1988.

(ii) Additional materials.

(A) Nonregulatory portions of the state submittal.

(77) Revisions to federally approved regulation 310 CMR 7.05(1) submitted on July 18, 1984, April 17, 1985, March 16, 1987, and November 25, 1987 by the Department of Environmental Quality Engineering approving sulfur-in-fuel limitations for the following sources: American Fiber and finishing Company (formerly known as Kendall Company), Colrain; Erving Paper company, Erving; and Westfield River Paper Company, Russell.

(i) Incorporation by reference. (A) Letters dated October 14, 1987 for the American Fiber and Finishing Company, Erving Paper Company, and Westfield River Paper Company facilities from Stephen F. Joyce, Deputy Regional Environmental Engineer, Department of Environmental Quality Engineering.

(B) Statements of agreement signed November 6, 1987 by Schuyler D. Bush, Vice President of Erving Paper Company; 1987 by Francis J. Fitzpatrick, President of Westfield River Paper Company; and November 16, 1987 by Robert Young, Vice President of American Fiber and Finishing Company.

(78) Revisions to federally approved regulation 310 CMR 7.02(12) submitted on July 13, 1988, September 15, 1988, and April 12, 1989, by the Department of Environmental Quality Engineering, limiting the volatility of gasoline from May 1 through September 15, beginning 1989 and continuing every year thereafter, including any waivers to such limitations that Massachusetts may grant. In 1989, the control period will begin on June 30.

(i) Incorporation by reference.

(A) Massachusetts Regulation 310 CMR 7.02(12)(e), entitled, ''gasoline Reid Vapor Pressure (RVP),'' and amendments to 310 CMR 7.00, ''Definitions,'' effective in the Commonwealth of Massachusetts on May 11, 1988.

(B) Massachusetts Emergency Regulation Amendment to 310 CMR 7.02(12)(e) 2.b entitled ''gasoline Reid Vapor Pressure'' effective in the Commonwealth of Massachusetts on April 11, 1989, with excerpt from the Manual for Promulgating Regulations, Office of the Secretary of State.

(79) Revisions to the State Implementation Plan submitted by the Massachusetts Department of Environmental Protection on February 4, 1988 and July 16, 1989 which define and impose reasonably available control technology to control volatile organic compound emissions from Monsanto Chemical

Company in Indian Orchard, Massachusetts.

(i) Incorporation by reference. (A) Letter from the Massachusetts Department of Environmental Protection dated July 18, 1989 submitting a revision to the Massachusetts State Implementation Plan.

(B) A final RACT Compliance Plan Conditional Approval issued to Monsanto Chemical Company by the Massachusetts Department of Environmental Protection, dated and effective June 20, 1989.

(ii) Additional materials. (A) Nonregulatory portions of the state submittal.

(80) Revisions to the State Implementation Plan submitted by the Massachusetts Department of Environmental Protection on July 18, 1989.

(i) Incorporation by reference.

(A) Letter from the Massachusetts Department of Environmental Protection dated July 18, 1989 submitting a revision to the Massachusetts State Implementation Plan.

(B) Amendments to the Conditional Plan Approval dated and effective July 12, 1989 and the Conditional Plan Approval dated and effective October 7, 1985 imposing reasonably available control technology on Spalding Sports Worldwide in Chicopee, Massachusetts.

(81) Revisions to the State Implementation Plan submitted by the Massachusetts Department of Environmental Quality Engineering on July 18, 1989.

(i) Incorporation by reference. (A) Letter from the Massachusetts Department of Environmental Quality Engineering dated July 18, 1989 submitting a revision to the Massachusetts State Implementation Plan.

(B) RACT Approval Addendum for Cranston Print Works Company, Webster Division Facility in Webster, Massachusetts dated and effective June 20, 1989.

(ii) Additional materials. Nonregulatory portions of the State submittal.

(82) Revision to the State Implementation Plan submitted by the Massachusetts Department of Environmental Protection August 8, 1989.

(i) Incorporation by reference.

(A) Letter from the Massachusetts Department of Environmental Protection dated August 8, 1989 submitting a revision to the Massachusetts State Implementation Plan.

(B) Amended Conditional Plan Approval (SM–85–168–IF) dated and effective August 1, 1989 and an Amendment to the Amended Conditional Plan Approval (SM–85–168–IF Revision) dated and effective August 8, 1989 imposing reasonably available control technology on Duro Textile Printers, Incorporated in Fall River, Massachusetts.

(83) Revisions to the State Implementation Plan submitted by the Massachusetts Department of Environmental Protection on August 24, 1989 and October 16, 1989 regulating gasoline volatility.

(i) Incorporation by reference. (A) Letter from the Massachusetts Department of Environmental Protection dated October 16, 1989 and a revision to the Massachusetts State Implementation Plan containing revised Massachusetts gasoline Reid Vapor Pressure regulation 310 CMR 7.24(5)(b)2, effective September 15, 1989.

(84) Revisions to the State Implementation Plan submitted by the Massachusetts Department of Environmental Protection on August 27, 1982, June 22, 1987, and December 27, 1989.

(i) *Incorporation by reference.*

(A) Letter from the Massachusetts Department of Environmental Protection dated August 27, 1982, submitting a revision to the Massachusetts State Implementation Plan.

(B) Amendments to 310 CMR 7.00, ''Definitions'' effective in the Commonwealth of Massachusetts on June 18, 1982 which add the definitions of the terms ''stationary source'' and ''building, structure, facility, or installation.''

(ii) *Additional materials.*

(A) Letter from the Massachusetts Department of Environmental Protection dated June 22, 1987 certifying that it did not rely on a dual definition in its attainment demonstration.

(B) Letter from the Massachusetts Department of Environmental Protection dated December 27, 1989 submitting additional assurances that it is making reasonable efforts to develop a complete and approve SIP.

(C) Nonregulatory portions of the submittal.

(85) Revisions to the State Implementation Plan submitted by the Massachusetts Department of Environmental Protection on November 28, 1989.

(i) Incorporation by reference. (A) Letter from the Massachusetts Department of Environmental Protection dated November 28, 1989 submitting a revision to the Massachusetts State Implementation Plan.

(B) A Plan Approval 4P89005 Correction dated and effective November 17, 1989 and the Amended Plan Approval, 4P89005 dated and effective October 19, 1989 imposing reasonably available control technology on Boston Whaler Inc., in Norwell, Massachusetts.

(ii) Additional materials. (A) Nonregulatory portions of the State submittal.

(86) Revisions to the State Implementation Plan submitted by the Massachusetts Department of Environmental Protection on November 28, 1989.

(i) Incorporation by reference. (A) Letter from the Massachusetts Department of Environmental Protection dated November 28, 1989 submitting a revision to the Massachusetts State Implementation Plan.

(B) A Plan Approval 4P89006 Correction dated and effective November 17, 1989 and the Amended Plan Approval (4P89006) dated and effective October 19, 1989 imposing reasonably available control technology on Boston Whaler Inc. in Rockland, Massachusetts.

(ii) Additional materials. (A) Nonregulatory portions of the State submittal.

(87) Revisions to the State Implementation Plan submitted by the Massachusetts Department of Environmental Protection on November 20, 1989.

(i) Incorporation by reference. (A) Letter from the Massachusetts Department of Environmental Protection dated November 20, 1989 submitting a revision to the Massachusetts State Implementation Plan.

(B) 2nd Amendment to the Final Approval/RACT Approval for the Philips Lighting Company dated November 2, 1989.

(ii) Additional materials. (A) Nonregulatory portions of the State submittal.

(88) Revisions to the State Implementation Plan submitted by the Massachusetts Department of Environmental Protection on June 13, 1990.

(i) *Incorporation by reference.* (A) Letter from the Massachusetts Department of Environmental Protection dated June 13, 1990 submitting a revision to the Massachusetts State Implementation Plan.

(B) An Amended Plan Approval dated and effective June 1, 1990 imposing reasonably available control technology on Acushnet Company, Titleist Golf Division, Plant A in New Bedford, Massachusetts.

(ii) *Additional materials.* (A) Nonregulatory portions of the State submittal.

(89) Revisions to the State Implementation Plan submitted by the Massachusetts Department of Environmental Protection on July 9, 1990.

(i) Incorporation by reference.

(A) Letter from the Massachusetts Department of Environmental Protection dated July 9, 1990 submitting a revision to the Massachusetts State Implementation Plan.

(B) An Amended Plan Approval dated and effective June 8, 1990 imposing reasonably available control technology on General Motors Corporation in Framingham, Massachusetts.

(ii) Additional materials.

(A) Nonregulatory portions of the State submittal.

(90) Revisions to the State Implementation Plan submitted by the Massachusetts Department of Environmental Protection on October 25, 1990 which define and impose RACT to control volatile organic compound emissions from Erving Paper Mills in Erving, Massachusetts.

(i) Incorporation by reference.

(A) Letter from the Massachusetts Department of Environmental Protection dated October 25, 1990 submitting a revision to the Massachusetts State Implementation Plan.

(B) A conditional final plan approval issued by the Massachusetts Department of Environmental Protection to Erving Paper Mills dated and effective October 16, 1990.

(91) Revisions to the State Implementation Plan submitted by the Massachusetts Department of Environmental

Protection on April 22, 1991 which clarify the requirements of RACT to control volatile organic compound emissions from Erving Paper Mills in Erving, Massachusetts.

(i) *Incorporation by reference.* (A) Letter from the Massachusetts Department of Environmental Protection dated April 22, 1991 submitting a revision to the Massachusetts State Implementation Plan.

(B) A conditional final plan approval amendment issued by the Massachusetts Department of Environmental Protection to Erving Paper Mills dated and effective April 16, 1991. This amended conditional plan approval amends the October 16, 1990 conditional plan approval incorporated at paragraph (c)(90) of this section.

(92) Revisions to the State Implementation Plan submitted by the Massachusetts Department of Environmental Protection on August 17, 1989, June 7, 1991 and December 17, 1991.

(i) Incorporation by reference.

(A) Letters from the Massachusetts Department of Environmental Protection dated August 17, 1989 and June 7, 1991 submitting a revision to the Massachusetts State Implementation Plan.

(B) Portions of regulation 310 CMR 7.18(7) for automobile surface coating as submitted on August 17, 1989 effective in the Commonwealth of Massachusetts on September 15, 1989.

(C) Portions of regulation 310 CMR 7.18(7) for automobile surface coating as submitted on June 7, 1991 effective in the Commonwealth of Massachusetts on June 21, 1991.

(ii) Additional materials.

(A) A letter dated December 17, 1991 from the Massachusetts Department of Environmental Protection withdrawing the emission limit for the Primer-surfacer application from the June 7, 1991 submittal.

(B) Nonregulatory portions of state submittal.

(93) Revisions to the State Implementation Plan submitted by the Massachusetts Department of Environmental Protection on August 27, 1982, June 27, 1984, March 6, 1985, April 12, 1985, August 17, 1989, June 7, 1991 and December 17, 1991.

(i) Incorporation by reference.

(A) Letters from the Massachusetts Department of Environmental Protection dated August 27, 1982, April 12, 1985, August 17, 1989, and June 7, 1991, submitting revisions to the Massachusetts State Implementation Plan.

(B) Amendment to 310 CMR 7.18(2)(b) submitted on August 27, 1982 and effective on September 16, 1982.

(C) Addition of 310 CMR 7.00: Appendix B submitted on April 12, 1985 and effective on September 30, 1984.

(D) Amendments to portions of 310 CMR 7.00 submitted on August 17, 1989 and effective September 15, 1989.

(E) Amendments to portions of 310 CMR 7.00 submitted on June 7, 1991 and effective on April 12, 1991.

(F) Amendments to portions of 310 CMR 7.00 submitted on June 7, 1991 and effective on June 21, 1991.

(ii) Additional materials.

(A) A letter from the Massachusetts Department of Environmental Quality Engineering dated June 27, 1984 submitting 310 CMR 7.00: Appendix B.

(B) A letter from the Massachusetts Department of Environmental Quality Engineering dated March 6, 1985 submitting additional information on 310 CMR 7.00: Appendix B and referencing 310 CMR 7.18(2)(b).

(C) A letter dated December 17, 1991 from the Massachusetts Department of Environmental Protection withdrawing the emission limit for the Primer-surfacer application in 310 CMR 7.18(7)(b) from the June 7, 1991 submittal.

(D) Nonregulatory portions of state submittal.

(94) Revisions to the State Implementation Plan submitted by the Massachusetts Department of Environmental Protection on August 4, 1989, December 6, 1989 and March 23, 1990.

(i) Incorporation by reference.

(A) Letter from the Massachusetts Department of Environmental Protection dated August 4, 1989, December 6, 1989 and March 23, 1990 submitting a revision to the Massachusetts State Implementation Plan.

(B) Massachusetts' Air Pollution Control Regulations 310 CMR 7.30 (excluding 310 CMR 7.30(8)(a)), and 310 CMR 7.31 entitled, ''MB Massport/Logan Airport Parking Freeze'' and ''MB City of Boston/East Boston Parking Freeze'' respectively, effective in

the State of Massachusetts on 11/24/89, and technical amendments to that regulation submitted by the Massachusetts Department of Environmental Protection on March 23, 1990, effective 3/30/90.

(ii) Additional materials.

(A) Appendix 5D, Baseline and Future Case CO Compliance Modeling, dated June 1986.

(B) Policy Statement Regarding the Proposed Amendment to the Logan Airport Parking Freeze, dated November 14, 1988.

(95) Revisions to the State Implementation Plan submitted by the Massachusetts Department of Environmental Protection of May 15, 1991.

(i) Incorporation by reference.

(A) Letter from the Massachusetts Department of Environmental Protection dated May 15, 1992 submitting a revision to the Massachusetts State Implementation Plan.

(B) Final Plan Approval No. 4P89051, dated and effective May 13, 1991 imposing reasonably available control technology on Dartmouth Finishing Corporation, New Bedford, Massachusetts.

(96) Revisions to the State Implementation Plan submitted by the Massachusetts Department of Environmental Protection on January 30, 1991.

(i) Incorporation by reference.

(A) Letter from the Massachusetts Department of Environmental Protection dated January 30, 1991 submitting a revision to the Massachusetts State Implementation Plan.

(B) Massachusetts Regulation 310 CMR 7.38, entitled ''Certification of Tunnel Ventilation Systems in the Metropolitan Boston Air Pollution Control District,'' and amendment to 310 CMR 7.00, entitled ''Definitions,'' effective in the Commonwealth of Massachusetts on January 18, 1991.

(97) Revisions to the State Implementation Plan submitted by the Massachusetts Department of Environmental Protection on May 17, 1990, July 5, 1990, June 7, 1991, and April 21, 1992.

(i) Incorporation by reference.

(A) Letters from the Massachusetts Department of Environmental Protection, dated May 17, 1990 and June 7, 1991, submitting a revision to the Massachusetts State Implementation Plan.

(B) Definition of ''motor vehicle fuel,'' ''motor vehicle fuel dispensing facility,'' ''substantial modification,'' and ''vapor collection and control system,'' added to 310 CMR 7.00 and effective in the Commonwealth of Massachusetts on October 27, 1989.

(C) 310 CMR 7.24(6) ''Dispensing of Motor Vehicle Fuel,'' effective in the Commonwealth of Massachusetts on October 27, 1989.

(D) Amendments to 310 CMR 7.24(6)(b) ''Dispensing of Motor Vehicle Fuel'' and to the definition of ''substantial modification'' in 310 CMR 7.00, effective in the Commonwealth of Massachusetts on June 21, 1991.

(E) Amendment to the definition of ''motor vehicle fuel dispensing facility'' in 310 CMR 7.00, effective in the Commonwealth of Massachusetts on April 12, 1991.

(ii) Additional materials.

(A) Letter from the Massachusetts Department of Environmental Protection, dated July 5, 1990, requesting the withdrawal of amendments to subsection 310 CMR 7.24(2)(c) which require Stage I vapor recovery in Berkshire County from the SIP revision package submitted on May 17, 1990.

(B) Letter from the Massachusetts Department of Environmental Protection, dated April 21, 1992, submitting an implementation policy statement regarding its Stage II program. This policy statement addresses the installation of California Air Resources Board (CARB) certified systems, Stage II testing procedures, and defects in State II equipment.

(C) Nonregulatory portions of the submittal.

(98) Revisions to the State Implementation Plan submitted by the Massachusetts Department of Environmental Protection on November 13, 1992, January 15, 1993, and February 17, 1993.

(i) Incorporation by reference.

(A) Letters from the Massachusetts Department of Environmental Protection dated November 13, 1992, January 15, 1993, and February 17, 1993, submitting a revision to the Massachusetts State Implementation Plan.

(B) 310 CMR 7.24(6) ''Dispensing of Motor Vehicle Fuel,'' effective in the State of Massachusetts on February 12, 1993.

(ii) Additional materials.

(A) Nonregulatory portions of the submittal.

(99) Revisions to the State Implementation Plan submitted by the Massachusetts Department of Environmental Protection on November 3, 1990 and August 26, 1992 which define and impose reasonably available control technology to control volatile organic compound emissions from S. Bent & Brothers in Gardner, Massachusetts.

(i) Incorporation by reference.

(A) Letter from the Massachusetts Department of Environmental Protection dated August 26, 1992 submitting a revision to the Massachusetts State Implementation Plan.

(B) Final Air Quality Approval RACT issued to S. Bent by the Massachusetts Department of Environmental Protection dated and effective May 22, 1992.

(ii) Additional materials

(A) Letter from the Massachusetts Department of Environmental Protection dated November 3, 1990 submitting a revision to the Massachusetts State Implementation Plan.

(B) Final Air Quality Approval RACT issued to S. Bent by the Massachusetts Department of Environmental Protection dated and effective October 17, 1990.

(C) Nonregulatory portions of the November 3, 1990 and August 26, 1992 state submittals.

(100) Revisions to the State Implementation Plan submitted by the Massachusetts Department of Environmental Protection on July 19, 1993.

(i) Incorporation by reference.

(A) Letter from the Massachusetts Department of Environmental Protection dated July 19, 1993 submitting a revision to the Massachusetts State Implementation Plan.

(B) Plan approval no. C–P–93–011, effective June 30, 1993, which contains emissions standards, operating conditions, and recordkeeping requirements applicable to Nichols & Stone Company in Gardner, Massachusetts.

(ii) Additional materials.

(A) Letter dated October 27, 1993 from Massachusetts Department of Environmental Protection submitting certification of a public hearing.

(101) Revisions to the State Implementation Plan submitted by the Massachusetts Department of Environmental Protection on December 9, 1991.

(i) Incorporation by reference.

(A) Letter from the Massachusetts Department of Environmental Protection dated December 9, 1991 submitting a revision to the Massachusetts State Implementation Plan.

(B) Massachusetts Regulation 310 CMR 7.36, entitled ''Transit System Improvements'', Massachusetts Regulation 310 CMR 7.37, entitled ''High Occupancy Vehicle Facilities'', and amendments to 310 CMR 7.00, entitled ''Definitions,'' effective in the Commonwealth of Massachusetts on December 6, 1991.

(102) [Reserved]

(103) Revisions to the State Implementation Plan submitted by the Massachusetts Department of Environmental Protection on November 15, 1993 and May 11, 1994, substituting the California Low Emission Vehicle program for the Clean Fuel Fleet program.

(i) Incorporation by reference.

(A) Letters from the Massachusetts Department of Environmental Protection dated November 15, 1993 and May 11, 1994, submitting a revision to the Massachusetts State Implementation Plan which substitutes the California Low Emission Vehicle program for the Clean Fuel Fleet program.

(B) A regulation dated and effective January 31, 1992, entitled ''U Low Emission Vehicle Program'', 310 CMR 7.40.

(C) Additional definitions to 310 CMR 7.00 ''Definitions'' (dated and effective 1/31/92) to carry out the requirements set forth in 310 CMR 7.40.

(ii) Additional materials.

(A) Additional nonregulatory portions of the submittal.

(104) Revisions to the State Implementation Plan submitted by the Massachusetts Department of Environmental Protection on March 31, 1994.

(i) Incorporation by reference.

(A) Letter from the Massachusetts Department of Environmental Protection dated March 31, 1994 submitting a revision to the Massachusetts State Implementation Plan.

(B) Final Plan Approval No. 4P92012, dated and effective March 16, 1994 imposing reasonably available control technology on Brittany Dyeing and

Finishing of New Bedford, Massachusetts.

(ii) Additional materials.

(A) Nonregulatory portions of the submittal.

(105) Revisions to the State Implementation Plan submitted by the Massachusetts Department of Environmental Protection on June 6, 1994.

(i) Incorporation by reference.

(A) Letter from the Massachusetts Department of Environmental Protection dated June 6, 1994 submitting a revision to the Massachusetts State Implementation Plan.

(B) 310 CMR 7.02(12) ''U Restricted Emission Status'' effective in the Commonwealth of Massachusetts on February 25, 1994.

(ii) Additional materials.

(A) Nonregulatory portions of the submittal.

(106) Revisions to the State Implementation Plan submitted by the Massachusetts Department of Environmental Protection on June 28, 1990, September 30, 1992, and July 15, 1994.

(i) Incorporation by reference.

(A) Letter from the Massachusetts Department of Environmental Protection, dated June 28, 1990, submitting a revision to the Massachusetts State Implementation Plan.

(B) Letter from the Massachusetts Department of Environmental Protection, dated September 30, 1992, submitting a revision to the Massachusetts State Implementation Plan.

(C) Letter from the Massachusetts Department of Environmental Protection, dated July 15, 1994, submitting a revision to the Massachusetts State Implementation Plan.

(D) Regulation 310 CMR 7.12 entitled ''Inspection Certification Record Keeping and Reporting'' which became effective on July 1, 1994.

(ii) Additional materials.

(A) Nonregulatory portions of submittal.

(B) Letter from the Massachusetts Department of Environmental Protection, dated December 30, 1994, assuring EPA that the data elements noted in EPA's December 13, 1994 letter were being incorporated into the source registration forms used by Massachusetts emission statement program.

(ii) Additional materials.

(A) Nonregulatory portions of submittal.

(107) Massachusetts submitted the Oxygenated Gasoline Program on October 29, 1993. This submittal satisfies the requirements of section 211(m) of the Clean Air Act, as amended.

(i) Incorporation by reference.

(A) Letter dated October 29, 1993 which included the oxygenated gasoline program, amendments to the Massachusetts Air Pollution Control Regulations, 310 CMR 7.00, with an effective date of March 1, 1994, requesting that the submittal be approved and adopted as part of Massachusetts' SIP.

(ii) Additional materials.

(A) The Technical Support Document for the Redesignation of the Boston Area as Attainment for Carbon Monoxide submitted on December 12, 1994.

(108) Revisions to the State Implementation Plan submitted by the Massachusetts Department of Environmental Protection on January 9, 1995.

(i) Incorporation by reference.

(A) Letter from the Massachusetts Department of Environmental Protection dated January 9, 1995 submitting a revision to the Massachusetts State Implementation Plan.

(B) The following portions of the Rules Governing the Control of Air Pollution for the Commonwealth of Massachusetts effective on November 18, 1994: 310 Code of Massachusetts Regulations Section 7.25 *U Best Available Controls for Consumer and Commercial Products.*

(109) Revisions to the State Implementation Plan submitted by the Massachusetts Department of Environmental Protection on January 9, 1995.

(i) Incorporation by reference.

(A) Letter from the Massachusetts Department of Environmental Protection, dated January 9, 1995, submitting a revision to the Massachusetts State Implementation Plan.

(B) The following portions of the Rules Governing the Control of Air Pollution for the Commonwealth of Massachusetts effective on December 16, 1994: 310 Code of Massachusetts Regulations Section 7.18(28) Automotive Refinishing.

[37 FR 10871, May 31, 1972]

EDITORIAL NOTE: For FEDERAL REGISTER citations affecting § 52.1120, see the List of CFR

Sections Affected in the Finding Aids section of this volume.

§ 52.1121 Classification of regions.

The Massachusetts plan was evaluated on the basis of the following classifications:

Air quality control region	Pollutant				
	Particulate matter	Sulfur oxides	Nitrogen dioxide	Carbon monoxide	Ozone
Metropolitan Boston Intrastate	I	I	III	I	I
Merrimack Valley-Southern New Hampshire Interstate	I	I	III	III	III
Metropolitan Providence Interstate	I	I	III	III	III
Central Massachusetts Intrastate	I	II	III	III	III
Hartford-New Haven-Springfield Interstate	I	I	III	I	I
Berkshire Intrastate	II	III	III	III	III

[37 FR 10872, May 31, 1972, as amended at 39 FR 16346, May 8, 1974; 45 FR 61303, Sept. 16, 1980]

§ 52.1122 [Reserved]

§ 52.1123 Approval status.

(a) With the exceptions set forth in this subpart the Administrator approves the Massachusetts plan as identified in § 52.1120 for attainment and maintenance of the national standards under section 110 of the Clean Air Act. Furthermore, the Administrator finds that the plan identified in § 52.1120 satisfies all requirements of Part D, Title I of the Clean Air Act as amended in 1977, except as noted below. In addition, continued satisfaction of the requirements of Part D of the ozone portion of the SIP depends on the adoption and submittal of RACT requirements by July 1, 1980 for the sources covered by CTGs issued between January 1978 and January 1979 and adoption and submittal by each subsequent January of additional RACT requirements for sourceovered by CTGs issued by the previous January.

(b) The above requirements for continued satisfaction of Part D are fulfilled by Massachusetts Regulation 310 CMR 7.18(17) and a narrative commitment to review CTG IIIs issued in the future. Both were submitted on September 9, 1982. Additionally, each individual RACT determination made under 310 CMR 7.18(17) will be submitted as a SIP revision to incorporate the limitation into the SIP, and DEQE will propose regulations for CTG III category controls if the controls are appropriate for the State.

[45 FR 61303, Sept. 16, 1980, as amended at 48 FR 51485, Nov. 9, 1983]

§ 52.1124 Review of new sources and modifications.

(a) Revisions to Regulation 310 CMR 7.02(2)(d) submitted on March 30, 1979 are disapproved because they do not satisfy the requirements of § 51.161.

[39 FR 7281, Feb. 25, 1974, as amended at 40 FR 47495, Oct. 9, 1975; 45 FR 2043, Jan. 10, 1980; 51 FR 40677, Nov. 7, 1986; 60 FR 33923, June 29, 1995]

§ 52.1126 Control strategy: Sulfur oxides.

(a) The revisions to the control strategy resulting from the modification to the emission limitations applicable to the sources listed below or resulting from the change in the compliance date for such sources with the applicable emission limitation is hereby approved. All regulations cited are air pollution control regulations of the State, unless otherwise noted. (See § 52.1125 for compliance schedule approvals and disapprovals pertaining to one or more of the sources listed below.)

Source	Location	Regulation involved	Date of adoption
Deerfield Specialty Papers, Inc.	Monroe Bridge	5.1.2	Oct. 17, 1972.
Hollingsworth & Vose Co.	East Walpole	5.1.2	June 29, 1972.
Pepperell Paper Co.	Pepperell	5.1.2	Nov. 29, 1972.
Stevens Paper Mills, Inc.	Westfield and South Hadley.	5.1.2	July 27, 1972.
Tileston and Hollingsworth Co.	Hyde Park	5.1.1	Nov. 21, 1972.

Source	Location	Regulation involved	Date of adoption
All sources in Berkshire APCD.	.....	5.1.2	Do.

(b)(1) Massachusetts Regulation 310 CMR 7.05(1) (formerly Regulation 5.1) for the Pioneer Valley Air Pollution Control District, which allows a relaxation of sulfur in fuel limitations under certain conditions, is approved for the following sources. All other sources remain subject to the previously approved requirements of Regulation 7.05(1) which stipulate that sources are required to burn residual fuel oil having a sulfur content not in excess of 0.55 pounds per million Btu heat release potential (approximately equivalent to 1 percent sulfur content.)

Deerfield Specialty Paper Company, Monroe Bridge; Amherst College, Amherst; Brown Company, Holyoke; Monsanto Polymer and Petrochemical Company, Building 21, Springfield; Monsanto Polymer and Petrochemical Company, Building 49, Springfield; Mount Holyoke College, South Hadley; Uniroyal Tire Inc., Chicopee; Smith College, Northampton; West Springfield Generating Station, Western Massachusetts Electric, West Springfield.

Pioneer Valley APCD

Belchertown State School, Belchertown
James River Graphics (formerly Scott Graphics), south Hadley (conditioned upon operation of the boilers on only one of the two stacks at any given time, and operation being so restricted in the source's operating permit granted by the Massachusetts Department of Environmental Quality Engineering.)
Massachusetts Mutual Life Insurance Company, Springfield.
Northampton State Hospital, Northampton.
Springfield Technical Community College, Springfield.
Stanley Home Products, Easthampton.
Stevens Elastomeric Industries, Easthampton.
Ware Industries, Ware.
Westfield State College, Westfield.
Westover Air Force Base (Building 1411), Chicopee.
University of Massachusetts, Amherst.
Mount Tom Generating Station, Holyoke.

(2) Massachusetts Regulation 310 CMR 7.05(1)(e)(3) for Pioneer Valley, as submitted on March 2, 1979, and May 5, 1981, which allows sources in Hampshire and Franklin Counties rated at less than 100 million Btu per hour heat input capacity to burn fuel oil having a sulfur content of not more than 1.21 pounds per million Btu heat release potential (approximately equivalent to 2.2% sulfur content) is approved for all such sources with the exception of:

Strathmore Paper Co., Montague.

(c) Massachusetts Regulation 310 CMR 7.05(1) (formerly Regulation 5.1) which allows a relaxation of sulfur in fuel limitations for the Central Massachusetts Air Pollution Control District, except in the City of Worcester, is approved for the following sources. All other sources remain subject to the previously approved requirements of Regulation 7.05(1) which stipulate that sources are required to burn residual fuel oil having a sulfur content not in excess of 0.55 pounds per million BTU heat release potential (approximately equivalent to 1 percent sulfur content fuel oil).

American Optical Company, Southbridge, Wyman Gordon Company, Grafton, James River—Massachusetts Inc., Fitchburg, Fitchburg Paper Company, Fitchburg (only boilers which emit through the 55 meter stack).

Central Massachusetts APCD

Borden, Inc., Chemical Division, Leominster (conditioned upon first completing construction of new stack and certification of completion to the EPA by the Massachusetts Department of Environmental Quality Engineering.).
Gardner State Hospital, Gardner.
Grafton State Hospital, Grafton.
Haywood-Shuster Woolen, E. Douglas.
Cranston Prints Works, Webster.
Baldwinville products, Templeton—(conditioned upon first completing construction of new stack, and certification of completion to the EPA by the Massachusetts Department of Environmental Quality Engineering.).

(d) Massachusetts Regulation 310 CMR 7.05(1) (formerly Regulation 5.1) for the Southeastern Massachusetts Air Pollution Control District, which allows a relaxation of sulfur in fuel limitations under certain conditions is approved for the following sources. All other sources remain subject to the previously approved requirements of Regulation 7.05(1) which stipulate that sources are required to burn residual fuel oil having a sulfur content not in

excess of 0.55 pounds per million Btu heat release potential (approximately equivalent to 1 percent sulfur content.)

New England Power Company, Brayton Point Station, Somerset; Montaup Electric Company, Somerset Station, Somerset (limited to 75% capacity while burning higher sulfur fuels.) Canal Electric Company, Sandwich; Taunton Municipal Lighting Plant, Somerset Avenue, Taunton.

Southeastern Massachusetts APCD

L&O Realty Trust, Taunton.
New Bedford Gas and Electric, New Bedford.
Texas Instruments, Attleboro.
Arkwright Finishing Incorporated, Fall River.
Foster Forbes Glass Company, Milford.
Owens Illinois Inc., Mansfield.
Harodite Finishing Corporation, Dighton—(conditioned upon prior removal of raincaps from stack, and certification of completion to the EPA by the Massachusetts Department of Environmental Quality Engineering.)
Polaroid Corporation, New Bedford.

(e) Massachusetts Regulation 310 CMR 7.05(1) (formerly Regulation 5.1) for the Merrimack Valley Air Pollution Control District, excluding the City of Lawrence and the towns of Andover, Methuen, and North Andover, which allows a relaxation of sulfur in fuel limitations under certain conditions, is approved for the following sources. All other sources remain subject to the previously approved requirements of Regulation 7.05(1) which stipulates that sources are required to burn residual fuel oil having a sulfur content not in excess of 0.55 pounds per million Btu heat release potential (approximately equivalent to 1 percent sulfur content).

Hollingsworth and Vose, West Groton; James River Paper, Pepperell; Haverhill Paperboard Corp., Haverhill. Residual oil burning facilities less than 100 million Btu's per hour heat input capacity, except in the City of Lawrence, and Towns of Andover, Methuen, and North Andover.

(f) Massachusetts Regulation 310 CMR 7.05(1) (formerly Regulation 5.1) for the Metropolitan Boston Air Pollution Control District, which allows a relaxation of sulfur in fuel limitations under certain conditions, is approved for the following sources. All other sources remain subject to the previously approved requirements of Regulation 7.05(1) which stipulate that sources in Arlington, Belmont, Boston, Brookline, Cambridge, Chelsea, Everett, Malden, Medford, Newton, Somerville, Waltham, and Watertown (the Boston Core Area) are limited to burn fuel with a sulfur content not in excess of 0.28 pounds per million Btu heat release potential (approximately 0.5% sulfur content residual oil; sources in the remaining APCD are limited to burn fuel with a sulfur content not in excess of 0.55 pounds per million Btu heat release potential (approximately 1% sulfur content residual oil).

Metropolitan Boston APCD

General Motors, Framingham.
Polaroid Corporation, Norwood.
Bird and Son, East Walpole.
Massachusetts Correctional Institute, South Walpole.
Bridgewater State College, Bridgewater.
Hanscom Field, Bedford.
Wellesley College, Wellesley.
National Tanning and Trading, Peabody.
General Tire, Reading.
General Food Corporation, Atlantic Gelatin, Woburn.
Massachusetts Correctional Institute, Bridgewater.
W. R. Grace, Acton.
Massachusetts Correctional Institute, Concord.
Danvers State Hospital, Danvers.
New England Power Company, Salem Harbor Station, Salem; Boston Edison, L Street, New Boston Station, Boston; Boston Edison, Mystic Station, Everett; Ventron Corporation, Danvers; General Electric, Lynn River Works, Lynn; U.S.M. Corporation, Beverly; Medfield State Hospital, Medfield; General Dynamics, Quincy; Hollingsworth and Vose, East Walpole; Kendal Company, Walpole; Dennison Manufacturing Company, Framingham.
Procter and Gamble Company, Quincy.
Natick Paperboard Corporation, Natick.

[38 FR 9089, Apr. 10, 1973]

EDITORIAL NOTE: For FEDERAL REGISTER citations affecting § 52.1126, see the List of CFR Sections Affected in the Finding Aids section of this volume.

§ 52.1127 Attainment dates for national standards.

The following table presents the latest dates by which the national standards are to be attained. The table reflects the new information presented in the approved Massachusetts plan.

Nonattainment areas	TSP		SO_2		NO_2	CO	O_3
	Primary	Secondary	Primary	Secondary			
Metropolitan Boston:							
Intrastate	.....	.....	c	g	b	.....	h
Boston	.....	.....	.....	.....	.....	h	.....
Danvers	a	g	.....	.....	.....	.....	.....
Cambridge	a	g	.....	.....	.....	h	.....
Framingham	a	g	.....	.....	.....	.....	.....
Lynn	a	g	.....	.....	.....	.....	.....
Marblehead	a	g	.....	.....	.....	.....	.....
Norwood	a	g	.....	.....	.....	.....	.....
Medford	a	g	.....	.....	.....	h	.....
Peabody	a	g	.....	.....	.....	.....	.....
Quincy	a	g	.....	.....	.....	h	.....
Revere	a	g	.....	.....	.....	.....	.....
Swampscott	a	g	.....	.....	.....	.....	.....
Waltham	a	g	.....	.....	.....	h	.....
Remainder AQCR	a	b	.....	.....	.....	b	.....
Merrimack Valley-Southern:							
NH Interstate	.....	.....	c	c	b	.....	h
Lowell	.....	.....	.....	.....	.....	h	.....
Haverhill	a	g	.....	.....	.....	.....	.....
Lawrence	a	g	.....	.....	.....	.....	.....
Remainder AQCR	a	b	.....	.....	.....	b	.....
Metropolitan Providence:							
Interstate	.....	.....	c	c	b	b	h
Fall River	a	g	.....	.....	.....	.....	.....
Remainder of AQCR	a	b	.....	.....	.....	.....	.....
Central Mass Intrastate	.....	.....	a	c	b	.....	h
Worcester	f	g	.....	.....	.....	h	.....
Athol	a	g	.....	.....	.....	.....	.....
Fitchburg	a	g	.....	.....	.....	.....	.....
Remainder of AQCR	a	b	.....	.....	.....	b	.....
Hartford-New Haven Springfield:							
Interstate	.....	.....	a	c	b	.....	h
Springfield	a	g	.....	.....	.....	h	.....
Remainder AQCR	a	b	.....	.....	.....	b	.....
Berkshire Intrastate	.....	.....	a	b	b	b	h
Adams	a	g	.....	.....	.....	.....	.....
North Adams	a	g	.....	.....	.....	.....	.....
Pittsfield	a	g	.....	.....	.....	.....	.....
Remainder AQCR	a	b	.....	.....	.....	.....	.....

NOTE: Footnotes which are underlined are prescribed by the Administrator because the plan did not provide a specific date or the date provided was not acceptable.

a. Air quality levels presently below primary standards or area is unclassifiable.
b. Air quality levels presently below secondary standards or area is unclassifiable.
c. May 31, 1975.
d. August 1, 1978.
e. May 31, 1977.
f. January 1, 1979.
g. 18-month extension for plan submittal granted, attainment date not yet proposed.
h. December 31, 1987.

Sources subject to plan requirements and attainment dates established under section 110(a)(2)(A) prior to the 1977 Clean Air Act Amendments remain obligated to comply with those requirements by the earlier deadlines. The earlier attainment dates are set out at 40 CFR 52.1127 (1978).

[45 FR 61303, Sept. 16, 1980; 46 FR 33524, June 30, 1981]

§ 52.1128 Transportation and land use controls.

(a) For purposes of this subpart, the definitions herein are applicable.

(b) Definitions:

(1) *Register* as applied to a motor vehicle, means the licensing of such motor vehicle for general operation on public roads or highways by the appropriate agency of the Federal Government or by the Commonwealth.

(2) *Boston Intrastate Region* means the Metropolitan Boston Intrastate Air Quality Control Region, as defined in § 81.19 of this part.

(3) [Reserved]

(4) *Freeze area* means that portion of the Boston Intrastate Region enclosed within the following boundaries:

The City of Cambridge; that portion of the City of Boston from the Charles River and the Boston Inner Harbor on

north and northeast of pier 4 on Northern Avenue; by the east side of pier 4 to B Street, B Street extension of B Street to B Street, B Street, Dorchester Avenue, and the Preble Street to Old Colony Avenue, then east to the water, then by the water's edge around Columbia Point on various courses generally easterly, southerly, and westerly to the center of the bridge on Morrissey Boulevard, on the east and southeast; then due west to Freeport Street, Freeport Street, Dorchester Avenue, Southeast Expressway, Southampton Street, Reading Street, Island Street, Chadwick Street, Carlow Street, Albany Street, Hunneman Street, Madison Street, Windsor Street, Cabot Street, Ruggles Street, Parker Street, Ward Street, Huntington Avenue, Brookline-Boston municipal boundary, Mountford Street to the Boston University Bridge on the southwest and west; and the Logan International Airport. Where a street or roadway forms a boundary the entire right-of-way of the street is within the freeze area as defined.

(5) *Boston proper* means that portion of the City of Boston, Massachusetts, contained within the following boundaries: The Charles River and Boston Inner Harbor on the northwest, north, and northeast, the Inner Harbor, Fort Point Channel, Fitzgerald Expressway, and the Massachusetts Avenue Expressway access branch on the east and southeast, and Massachusetts Avenue on the west. Where a street or roadway forms a boundary, the entire right-of-way of the street is within the Boston proper area as here defined.

(6) *Regional Administrator* means the Administrator of Region I of the U.S. Environmental Protection Agency.

(7) *Governor* means the Governor of the Commonwealth or the head of such executive office of the Commonwealth as the Governor shall designate as responsible for carrying out specific provisions of this subpart.

(8) *Commonwealth* means the Commonwealth of Massachusetts.

[40 FR 25161, June 12, 1975]

§§ 52.1129—52.1130 [Reserved]

§ 52.1131 Control strategy: Particulate matter.

(a) Revisions to the following regulations submitted on March 30, 1979 are disapproved:

(1) Regulation 310 CMR 7.02(8), Table 2, new facilities greater than 250 million Btu/hr input burning solid fuel.

(2) Regulation 310 CMR 7.02(9), Table 5.

[45 FR 2044, Jan. 10, 1980]

§ 52.1132 Control strategy: Carbon Monoxide.

(a) Approval-On November 13, 1992, the Massachusetts Department of Environmental Protection submitted a revision to the carbon monoxide State Implementation Plan for the 1990 base year emission inventory. The inventory was submitted by the State of Massachusetts to satisfy Federal requirements under section 182(a)(1) of the Clean Air Act as amended in 1990, as a revision to the carbon monoxide State Implementation Plan.

(i) Approval—On December 12, 1994, the Massachusetts Department of Environmental Protection submitted a request to redesignate the Boston Area carbon monoxide nonattainment area to attainment for carbon monoxide. As part of the redesignation request, the State submitted a maintenance plan as required by 175A of the Clean Air Act, as amended in 1990. Elements of the section 175A maintenance plan include a base year (1993 attainment year) emission inventory for carbon monoxide, a demonstration of maintenance of the carbon monoxide NAAQS with projected emission inventories to the year 2010 for carbon monoxide, a plan to verify continued attainment, a contingency plan, and an obligation to submit a subsequent maintenance plan revision in 8 years as required by the Clean Air Act. If the area records a violation of the carbon monoxide NAAQS (which must be confirmed by the State), Massachusetts will implement one or more appropriate contingency measure(s) which are contained in the contingency plan. The menu of contingency measures includes an enhanced

motor vehicle inspection and maintenance program and implementation of the oxygenated fuels program. The redesignation request and maintenance plan meet the redesignation requirements in sections 107(d)(3)(E) and 175A of the Act as amended in 1990, respectively. The redesignation meets the Federal requirements of section 182(a)(1) of the Clean Air Act as a revision to the Massachusetts Carbon Monoxide State Implementation Plan for the above mentioned area.

[61 FR 2923, Jan. 30, 1996]

§ 52.1133 [Reserved]

§ 52.1134 Regulation limiting on-street parking by commuters.

(a) *On-street parking* means parking a motor vehicle on any street, highway, or roadway, except for legal stops within designated loading zones or areas defined for loading purposes, at or before intersections, as caution, safety and emergencies require, whether or not a person remains in the vehicle.

(b) Commencing on or before June 30, 1974, the Commonwealth, the City of Boston, the City of Cambridge, and administrative bodies of any of them having jurisdiction over any streets, highways, or roadways within the City of Cambridge or Boston proper, and the principal officials and administrative bodies thereof having responsibility over parking on such streets, highways, or roadways, shall adopt all necessary administrative and enforcement procedures and regulations to effect a prohibition of on-street parking within Boston proper between the hours of 7 a.m. and 9:30 a.m., and within the City of Cambridge between the hours of 7 a.m. and 10 a.m., except Saturdays, Sundays and legal holidays. The regulations shall state that violation of the prohibition shall be punishable by a fine of not less than $15. The City of Boston shall at a minimum eliminate 50 percent of on-street parking during the hours specified by January 1, 1976; 66⅔ percent by September 1, 1976; and 100 percent by March 1, 1977. The City of Cambridge shall at a minimum eliminate 33⅓ percent of on-street parking during the hours specified by September 30, 1974; 66⅔ percent by July 1, 1975; and 100 percent by March 1, 1977. Any other affected entity shall at a minimum eliminate 33⅓ percent of such parking during the hours of 7 a.m. to 10 a.m. by January 1, 1976; 66⅔ percent by September 1, 1976, and 100 percent by March 1, 1977.

(c) The following classes of vehicles shall be exempt from the requirements of this section, provided that on-street parking by such vehicles is in compliance with local and state regulations:

(1) Vehicles owned by residents of that portion of Boston included within Boston proper that are registered in Boston and display a resident parking sticker for that area issued by the City of Boston;

(2) Vehicles owned by residents of Cambridge that are registered in and parked within Cambridge and display an appropriate parking sticker issued by the City of Cambridge;

(3) Vehicles owned and operated by handicapped persons with HP license plates; and

(4) Vehicles registered as ''commercial vehicles'' by the Commonwealth and displaying appropriate license plates.

(d) On or before June 30, 1974, no owner or operator of a motor vehicle shall park, or permit the on-street parking of, said vehicle within Cambridge or Boston proper except in conformity with the provisions of this section and the measures implementing it.

(e) The Governor and the chief executive of any other governmental entity on which obligations are imposed by paragraph (b) of this section should, on or before April 15, 1974, submit to the Regional Administrator for his approval a detailed statement of the legal and administrative steps selected to effect the prohibition provided for in paragraphs (b) and (d) of this section, and a schedule of implementation consistent with the requirements of this section. Such schedule shall include as a minimum the following:

(1) Designation of one or more agencies responsible for the administration and enforcement of the program;

(2) The procedures by which the designated agency will enforce the prohibition provided for in paragraphs (b) and (d) of this section;

(3) The procedures by which vehicles exempt from the requirements of this section will be marked; and

(4) A map showing which streets will be subject to the ban according to the schedule of implementation.

(f) Upon a finding that substantial hardship would otherwise be experienced by employees of employment facilities located in Cambridge, the Director of Traffic and Parking of the City of Cambridge may issue special parking stickers to such employees which shall entitle vehicles to park during the hours of the ban. Such stickers shall be valid only for those streets and areas of streets clearly identified on the face of such stickers, shall be issued with preference being given to carpools and vanpools and shall be subject to immediate revocation if the vehicle is cited for a parking violation on a street or area other than those designated. A list of all persons receiving such stickers shall be sent to the Regional Administrator on or before July 1 of each year.

(g) The ban shall not apply to any street space which is subject to metered parking with a maximum allowable time limit of one hour.

[40 FR 25162, June 12, 1975]

§ 52.1135 Regulation for parking freeze.

(a) Definitions:

(1) The phrase *to commence construction* means to engage in a continuous program of on-site construction including site clearance, grading, dredging, or land filling specifically designed for a parking facility in preparation for the fabrication, erection, or installation of the building components of the facility. For the purpose of this paragraph, interruptions resulting from acts of God, strikes, litigation, or other matters beyond the control of the owner shall be disregarded in determining whether a construction or modification program is continuous.

(2) The phrase *to commence modification* means to engage in a continuous program of on-site modification including site clearance, grading, dredging, or land filling in preparation for a specific modification of the parking facility.

(3) The phrase *commercial parking space* means a space used for parking a vehicle in a commercial parking facility.

(4) [Reserved]

(5) *Commercial parking facility* (also called *facility*) means any lot, garage, building or structure, or combination or portion thereof, on or in which motor vehicles are temporarily parked for a fee, excluding (i) a parking facility, the use of which is limited exclusively to residents (and guests of residents) of a residential building or group of buildings under common control, and (ii) parking on public streets.

(6) *Freeze* means to maintain at all times after October 15, 1973, the total quantity of commercial parking spaces available for use at the same amounts as were available for use prior to said date; *Provided,* That such quantity may be increased by spaces the construction of which commenced prior to October 15, 1973, or as specifically permitted by paragraphs (n), (p) and (q) of this section; provided further that such additional spaces do not result in an increase of more than 10 percent in the total commercial parking spaces available for use on October 15, 1973, in any municipality within the freeze area or at Logan International Airport (''Logan Airport''). For purposes of the last clause of the previous sentence, the 10 percent limit shall apply to each municipality and Logan Airport separately.

(b) [Reserved]

(c) There is hereby established a freeze, as defined by paragraph (a)(6) of this section, on the availability of commercial parking facilities in the freeze area effective October 15, 1973. In the event construction in any municipality, commenced prior to October 15, 1973, results in a number of spaces which exceeds the 10 percent limit prescribed by paragraph (a)(6) of this section, then the Governor shall immediately take all necessary steps to assure that the available commercial spaces within such municipality shall be reduced to comply with the freeze. In the event that such limit is exceeded at Logan Airport, then the provisions of paragraph (m) of this section shall apply.

(d) [Reserved]

(e) After August 15, 1973, no person shall commence construction of any commercial parking facility or modification of any such existing facility in the freeze area unless and until he has obtained from the Governor or from an agency approved by the Governor a permit stating that construction or modification of such facility will be in compliance with the parking freeze established by paragraph (c) of this section. This paragraph shall not apply to any proposed parking facility for which a general construction contract was finally executed by all appropriate parties on or before August 15, 1973.

(f) The Governor shall notify the Regional Administrator in writing within 10 days of approval of any agency pursuant to paragraph (e) of this section. In order for any agency to be approved by the Governor for purposes of issuing permits pursuant to paragraph (e) of this section, such agency shall demonstrate to the satisfaction of the Governor that:

(1) Requirements for permit application and issuance have been established. Such requirements shall include but not be limited to a condition that before a permit may be issued the following findings of fact or factually supported projections must be made:

(i) The location of the facility; and

(ii) The total motor vehicle capacity before and after the proposed construction or modification of the facility.

(2) Criteria for issuance of permits have been established and published. Such criteria shall include, but not be limited to:

(i) Full consideration of all facts contained in the application.

(ii) Provisions that no permit will be issued if construction or modification of the facility will not comply with the requirements of paragraph (c) of this section.

(3) Agency procedures provide that no permit for the construction or modification of a facility covered by this section shall be issued without notice and opportunity for public hearing. The public hearing may be of a legislative type; the notice shall conform to the requirements of 40 CFR 51.4(b); and the agency rules or procedures may provide that if no notice of intent to participate in the hearing is received from any member of the public (other than the applicant) prior to 7 days before the scheduled hearing date, no hearing need be held. If notice of intent to participate is required, the fact shall be noted prominently in the required hearing notice.

(g)–(l) [Reserved]

(m) On or before January 30, 1975, the Massachusetts Port Authority (''Massport'') shall prepare and submit to the Governor for his approval a plan showing the manner in which the number of commercial parking spaces at Logan Airport which exceeds the number of such spaces permitted under the freeze shall be removed from use. The Governor shall approve such plan if he determines that (1) implementation of such plan would result in reducing the aggregate number of commercial parking spaces to the level of such spaces permitted by this section, (2) Massport has adequate legal authority to implement such plan and (3) adequate commitments have been made by Massport to assure the Governor that such plan will be fully implemented and maintained on and after May 1, 1976. In the event that the Governor does not approve such plan by April 1, 1976, then the owner or operator of each commercial parking facility located at Logan Airport shall, on or before July 1, 1976, reduce the number of commercial parking spaces available for use at each such facility by an amount which bears the same proportion to the number of spaces exceeding the limit imposed by this section as the number of spaces available at such facility bears the total number of such spaces which were available for use at Logan Airport on April 1, 1976.

(n) Where an agency approved by the Governor under paragraph (e) of this section to issue permits for new construction in the City of Cambridge demonstrates to the satisfaction of the Governor that (1) specific on-street parking spaces in use as of October 15, 1973, were being legally and regularly used as of such date for parking by commuters (as that term is defined in § 52.1161(a)(6)) who are not residents of Cambridge and that (2) effective measures have been implemented (including adequate enforcement) to prevent such

spaces from being used by such commuters, then such approved agency may issue permits for construction of additional new commercial parking spaces equal to one-half of the number of spaces removed from regular use by such commuters and the total quantity of commercial parking spaces allowable in Cambridge under this section shall be raised accordingly.

(o) On or before July 31, 1976, and on or before each succeeding July 31, the Governor and the chief executive officer of any agency approved by the Governor under paragraph (e) of this section shall submit a report to the Regional Administrator setting forth:

(1) The names and addresses of all persons who received permits during the previous twelve-month period ending June 30 and number of spaces allocated to each such person;

(2) The number of commercial parking spaces available for use as of the June 30 prior to the date of the report;

(3) The number of commercial parking spaces which remain available for allocation by the Governor or such agency as of the June 30 prior to the date of the report, including those spaces made available because of retirement of existing commercial parking spaces as well as those spaces made available because of the effects of paragraphs (n), (p) and (q) of this section; and

(4) The location and capacity of any park-and-ride facility designated under paragraph (p) of this section.

(p) The Governor and any approved agency may issue a permit to construct a commercial parking facility which is designated by the Governor as a park-and-ride facility to be operated in conjunction with mass transit service without regard to the limitations on number of spaces imposed by this section.

(q) Where an agency approved by the Governor can demonstrate to the satisfaction of the Governor that there have been physically eliminated through permanent modification or demolition any legal on-street parking spaces within a municipality then such agency may issue permits for construction within that municipality of additional new commercial parking spaces equal to the number of spaces thus eliminated and the total quantity of commercial parking spaces allowable for such municipality under this section shall be increased accordingly.

(r) The provisions of this regulation shall cease to be effective as to that portion of the freeze area lying within the City of Boston and not included within Boston proper or Logan Airport at such time as the City of Boston implements a program, approved by the Governor, which shall include effective measures to control the construction of additional commercial parking spaces within that area, including procedures for issuance of conditional use permits under applicable zoning regulations and for assuring compliance with all air quality requirements under state and Federal law.

[40 FR 25162, June 12, 1975, as amended at 40 FR 39863, Aug. 29, 1975]

§§ 52.1136—52.1144 [Reserved]

§ 52.1145 Regulation on organic solvent use.

(a) Definitions:

(1) *Organic solvents* include diluents and thinners and are defined as organic materials which are liquids at standard conditions and which are used as dissolvers, viscosity reducers, or cleaning agents, except that such materials which exhibit a boiling point higher than 220° F. at 0.5 millimeters of mercury absolute pressure or having an equivalent vapor pressure shall not be considered to be solvents unless exposed to temperatures exceeding 220° F.

(2) *Solvent of high photochemical reactivity* means any solvent with an aggregate of more than 20 percent of its total volume composed of the chemical compounds classified below or which exceeds any of the following individual percentage composition limitations in reference to the total volume of solvent:

(i) A combination of hydrocarbons, alcohols, aldehydes, esters, ethers, or ketones having an olefinic or cycloolefinic type of unsaturation: 5 percent;

(ii) A combination of aromatic compounds with eight or more carbon atoms to the molecule except ethylbenzene: 8 percent;

(iii) A combination of ethylbenzene, ketones having branched hydrocarbon structures, trichloroethylene or toluene: 20 percent. Whenever any organic solvent or any constituent of an organic solvent may be classified from its chemical structure into more than one of the above groups of organic compounds, it shall be considered as a member of the most reactive chemical group, that is, that group having the least allowable percentage of total volume of solvents.

(3) *Organic materials* are chemical compounds of carbon excluding carbon monoxide, carbon dioxide, carbonic acid, metallic carbides, metallic carbonates, and ammonium carbonate.

(b) This section is applicable throughout the Boston Intrastate Region. The requirements of this section shall be in effect in accordance with § 52.1147.

(c) No person shall cause, allow, suffer, or permit the discharge into the atmosphere of more than 15 pounds of organic materials in any 1 day, nor more than 3 pounds of organic materials in any 1 hour, from any article, machine, equipment, or other contrivance, in which any organic solvent or any material containing organic solvent comes into contact with flame or is baked, heat-cured, or heat-polymerized, in the presence of oxygen, unless said discharge has been reduced as a result of the installation of abatement controls by at least 85 percent. Those portions of any series of articles, machines, equipment, or other contrivances designed for processing a continuous web, strip, or wire that emit organic materials and use operations described in this section shall be collectively subject to compliance with this section.

(d) No person shall cause, suffer, allow, or permit the discharge into the atmosphere of more than 40 pounds of organic materials in any 1 day, nor more than 8 pounds in any 1 hour, from any article, machine, equipment, or other contrivance used under conditions other than described in paragraph (c) of this section for employing, or applying any solvent of high photochemical reactivity or material containing such photochemically reactive solvent, unless said discharge has been reduced as a result of the installation of abatement controls by at least 85 percent. Emissions of organic materials into the atmosphere resulting from air or heated drying of products for the first 12 hours after their removal from any article, machine, equipment or other contrivance described in this section shall be included in determining compliance with this section. Emissions resulting from baking, heat-curing, or heat-polymerizing as described in paragraph (c) of this section shall be excluded from determination of compliance with this section. Those portions of any series of articles, machines, equipment, or other contrivances designed for processing a continuous web, strip, or wire that emit organic materials and use operations described in this section shall be collectively subject to compliance with this section.

(e) Emissions of organic materials to the atmosphere from the clean-up with a solvent of high photochemical reactivity, or any article, machine, equipment, or other contrivance described in paragraph (c) or (d) of this section or in this paragraph, shall be included with the other emissions of organic materials from that article, machine, equipment or other contrivance for determining compliance with this section.

(f) No person shall cause, suffer, allow, or permit during any one day disposal of a total of more than 1.5 gallons of any solvent of high photochemical reactivity, or of any material containing more than 1.5 gallons of any such photochemically reactive solvent by any means that will permit the evaporation of such solvent into the atmosphere.

(g) Emissions of organic materials into the atmosphere required to be controlled by paragraph (c) or (d) of this section shall be reduced by:

(1) Incineration, provided that 90 percent or more of the carbon in the organic material being incinerated is converted to carbon dioxide, or

(2) Adsorption, or

(3) The use of other abatement control equipment determined by the Regional Administrator to be no less effective than either of the above methods.

(h) A person incinerating, adsorbing, or otherwise processing organic materials pursuant to this section shall provide, properly install and maintain in calibration, in good working order, and in operation, devices as specified in the authority to construct, or as specified by the Regional Administrator, for indicating temperatures, pressures, rates of flow, or other operating conditions necessary to determine the degree and effectiveness of air pollution control.

(i) Any person using organic solvents or any materials containing organic solvents shall supply the Regional Administrator upon request and in the manner and form prescribed by him, written evidence of the chemical composition, physical properties, and amount consumed for each organic solvent used.

(j) The provisions of this rule shall not apply to:

(1) The manufacture of organic solvents, or the transport or storage of organic solvents or materials containing organic solvents.

(2) The spraying or other use of insecticides, pesticides, or herbicides.

(3) The employment, application, evaporation, or drying of saturated halogenated hydrocarbons or perchloroethylene.

(4) The use of any material, in any article, machine, equipment or other contrivance described in paragraph (c), (d), or (e) of this section if:

(i) The volatile content of such material consists only of water, and organic solvents;

(ii) The organic solvents comprise not more than 30 percent by volume of said volatile content;

(iii) The volatile content is not a solvent of high photochemical reactivity as defined in paragraph (a) of this section; and

(iv) The organic solvent or any material containing organic solvent does not come into contact with flame. This last stipulation applies only for those articles, machines, equipment or other contrivances that are constructed or modified after November 8, 1973.

(5) The use of any material, in any article, machine, equipment or other contrivance described in paragraph (c), (d), or (e) of this section if:

(i) The organic solvent content of such material does not exceed 30 percent by volume of said material;

(ii) The volatile content is not a solvent of high photochemical reactivity; and

(iii) [Reserved]

(iv) The organic solvent or any material containing organic solvent does not come into contact with flame. This last stipulation applies only for those articles, machines, equipment or other contrivances that are constructed or modified after November 8, 1973.

(6) [Reserved]

(7) An article, machine, equipment or other contrivance described in paragraph (c), (d) or (e) of this section used exclusively for chemical or physical analyses or determination of product quality and commercial acceptance provided that—

(i) The exemption is approved in writing by the Regional Administrator;

(ii) The operator of said article, machine, equipment or contrivance is not an integral part of the production process; and

(iii) The emissions from said article, machine, equipment or other contrivance do not exceed 800 lbs. in any calendar month.

(8) Sources subject to the provisions of Massachusetts Regulation 310 CMR 7.18 which has been federally approved.

(k) [Reserved]

(l) All determinations of emission rates shall be conducted in a manner approved in writing by the Regional Administrator.

[40 FR 25165, June 12, 1975, as amended at 47 FR 28373, June 30, 1982]

§ 52.1146 [Reserved]

§ 52.1147 Federal compliance schedules.

(a) Except as provided in paragraph (c) of this section, the owner or operator of a source subject to regulation under paragraph (c)(1) of § 52.1144 and § 52.1145 shall comply with the increments of progress contained in the following schedule:

(1) Final control plans for emission control systems or process modifications must be submitted on or before June 1, 1974, for sources subject to

§ 52.1144(c)(1) and on or before May 1, 1974 for sources subject to § 52.1145.

(2) Contracts for emission control systems or process modifications must be awarded or orders must be issued for the purchase of component parts to accomplish emission control or process modifications on or before March 1, 1975, for sources subject to § 52.1144(c)(1) and on or before July 1, 1974, for sources subject to § 52.1145.

(3) Initiation of on-site construction or installation of emission control equipment or process modification must begin on or before May 1, 1975, for sources subject to § 52.1144(c)(1) and on or before August 15, 1974, for sources subject to § 52.1145.

(4) On-site construction or installation of emission control equipment or process modification must be completed prior to April 15, 1975, except for purposes of paragraph (c)(1) of § 52.1144, the applicable date shall be February 1, 1976.

(5) Final compliance is to be achieved prior to May 31, 1975, except for sources subject to paragraph (c)(1) of § 52.1144 of this subpart. Final compliance for sources subject to paragraph (c)(1) of § 52.1144 is to be achieved by June 1, 1976.

(i) Facilities subject to paragraph (c)(1)(iii) of § 52.1144 of this subpart which have a daily throughput of 20,000 gallons of gasoline or less are required to have a vapor recovery system in operation no later than May 31, 1977. Delivery vessels and storage containers served exclusively by facilities required to have a vapor recovery system in operation no later than May 31, 1977, also are required to meet the provisions of this section no later than May 31, 1977.

(6) Any owner or operator of stationary sources subject to compliance schedule in this paragraph shall certify to the Administrator within 5 days after the deadline for each increment of progress, whether or not the required increment of progress has been met.

(7) Any gasoline dispensing facility subject to paragraph (c)(1) of § 52.1144 which installs a storage tank after October 15, 1973, shall comply with such paragraph by March 1, 1976. Any facility subject to such paragraph which installs a storage tank after March 1, 1976 shall comply with such paragraph at the time of installation.

(b) Except as provided in paragraph (d) of this section, the owner or operator of a source subject to paragraph (d)(1) of § 52.1144 shall comply with the increments of progress contained in the following compliance schedule:

(1) Final control plans for emission control systems or process modifications must be submitted prior to January 1, 1975.

(2) Contracts for emission control systems or process modifications must be awarded or orders must be issued for the purchase of component parts to accomplish emission control or process modification prior to March 1, 1975.

(3) Initiation of on-site construction or installation of emission control equipment or process modification must begin not later than May 1, 1975.

(4) On-site construction or installation of emission control equipment or process modification must be completed prior to May 1, 1977.

(5) Federal compliance is to be achieved prior to May 31, 1977.

(6) Any owner or operator of stationary sources subject to the compliance schedule in this paragraph shall certify to the Administrator, within 5 days after the deadline for each increment of progress, whether or not the required increment of progress has been met.

(7) Any gasoline dispensing facility subject to paragraph (d)(1) of § 52.1144 which installs a gasoline dispensing system after the effective date of this regulation shall comply with the requirements of such paragraph by May 31, 1977. Any facility subject to such paragraph which installs a gasoline dispensing system after May 31, 1977, shall comply with such paragraph at the time of installation.

(c) Paragraph (a) of this section shall not apply:

(1) To a source which is presently in compliance with all requirements of paragraph (c)(1) of § 52.1144 and § 52.1145 and which has certified such compliance to the Administrator by June 1, 1974. The Administrator may request whatever supporting information he considers necessary for proper certification.

(2) To a source for which a compliance schedule is adopted by the Commonwealth and approved by the Administrator.

(3) To a source subject to § 52.1144(c)(1) whose owner or operator submits to the Administrator by June 1, 1974, a proposed alternative compliance schedule. No such schedule may provide for compliance after March 1, 1976. If promulgated by the Administrator, such schedule shall satisfy the requirements of this paragraph for the affected source.

(4) To a source subject to § 52.1145 whose owner or operator submits to the Administrator by May 1, 1974, a proposed alternative compliance schedule. No such schedule may provide for compliance after May 31, 1975. If promulgated by the Administrator, such schedule shall satisfy the requirements of this paragraph for the affected source.

(d) Paragraph (b) of this section shall not apply:

(1) To a source which is presently in compliance with paragraph (d)(1) of § 52.1144 and which has certified such compliance to the Administrator by January 1, 1975. The Administrator may request whatever supporting information he considers necessary for proper certification.

(2) To a source for which a compliance schedule is adopted by the State and approved by the Administrator.

(3) To a source whose owner or operator submits to the Administrator by June 1, 1974, a proposed alternative schedule. No such schedule may provide for compliance after May 31, 1977. If promulgated by the Administrator, such schedule shall satisfy the requirements of this paragraph for the affected source.

(e) Nothing in this paragraph shall preclude the Administrator from promulgating a separate schedule for any source to which the application of the compliance schedule in paragraph (a) or (b) of this section fails to satisfy and requirements of 40 CFR 51.15 (b) and (c).

[38 FR 30970, Nov. 8, 1973]

EDITORIAL NOTES: (1) For FEDERAL REGISTER citations affecting § 52.1147, see the List of CFR Sections Affected in the Finding Aids section of this volume.

(2) The compliance dates given in paragraphs (b) (1) through (3) of § 52.1147 were deferred indefinitely at 40 FR 1127, Jan. 6, 1975.

§§ 52.1148—52.1159 [Reserved]

§ 52.1160 Requirements for state implementation plan revisions relating to new motor vehicles.

Massachusetts' adopted LEV program must be revised to the extent necessary for the state to comply with all aspects of the requirements of § 51.120.

[60 FR 4737, Jan. 24, 1995]

§ 52.1161 Incentives for reduction in single-passenger commuter vehicle use.

(a) Definitions:

(1) *Employer* means any person or entity which employs 50 or more employees at any time during a calendar year at an employment facility located in the Boston Intrastate Region.

(2) *Educational institution* means any person or entity which has 250 or more employees and students at any time during the academic year at an educational facility offering secondary level or higher training including vocational training located in the Boston Intrastate Region.

(3) *Employee* means any person who performs work for an employer thirty-five or more hours per week and for more than twenty weeks per year for compensation and who travels to and from work by any mode of travel.

(4) *Student* means any full-time day student who does not live at the educational institution and who travels to and from classes by any mode of travel.

(5) *Affected facility* means any employment facility at which 50 or more persons are employees or any educational facility at which 250 or more persons are students and employees.

(6) *Commuter* means both an *employee* and a *student*.

(7) *Single-passenger commuter vehicle* means a motor-driven vehicle with four or more wheels with capacity for a driver plus one or more passengers which is used by a commuter traveling alone to work or classes and is not customarily required to be used in the course of his employment or studies.

(8) *Base date* means the date set forth in paragraph (d) of this section as of

which the base number of single-passenger commuter vehicles at a particular employment facility or educational institution must be determined.

(9) *The Secretary* means the Secretary of Transportation and Construction of the Commonwealth of Massachusetts.

(b) Commencing with the effective date of this section, each employer and educational institution (except as provided below) shall diligently and expeditiously implement and thereafter continuously maintain the following mandatory measures which are designed to achieve a goal of reducing the number of single-passenger commuter vehicles customarily commuting daily to each affected facility as of its base date by 25 percent (or as adjusted pursuant to paragraph (g) of this section):

(1) Making available to commuters any pass program offered by the Massachusetts Bay Transportation Authority, if any commuter to the facility uses the mass transit facilities of such Authority as part of his daily commuting trip, including making all administrative arrangements for commuters to purchase the pass and thereby participate in the pass program and encouraging commuters to participate by such means as publicizing the availability of the pass program and the cost advantages thereof.

(2)—(8) [Reserved]

[40 FR 25166, June 12, 1975, as amended at 47 FR 28373, June 30, 1982; 41 FR 10223, Mar. 10, 1976]

§ 52.1162 Regulation for bicycle use.

(a) Definitions:

(1) *Bicycle* means a two-wheel nonmotor-powered vehicle.

(2) *Bike path* means a route for the exclusive use of bicycles separated by grade or other physical barrier from motor traffic.

(3) *Bike lane* means a street lane restricted to bicycles and so designated by means of painted lanes, pavement coloring or other appropriate markings. A *peak hour* bike lane means a bike lane effective only during times of heaviest auto commuter traffic.

(4) *Bike route* means a route in which bicycles share road space with motorized vehicles.

(5) *Bikeway* means bike paths, bike lanes and bike routes.

(6) *Bicycle parking facility* means any facility for the temporary storage of bicycles which allows the frame and both wheels of the bicycle to be locked so as to minimize the risk of theft and vandalism.

(7) *Parking facility* means a lot, garage, building, or portion thereof in or of which motor vehicles are temporarily parked.

(8) *Parking space* means the area allocated by a parking facility for the temporary storage of one automobile.

(9) *MBTA* means the Massachusetts Bay Transportation Authority.

(b) *Application*. This section shall be applicable in the Boston Intrastate Region.

(c) *Study*. The Commonwealth, according to the schedule set forth in paragraph (d) of this section, shall conduct a comprehensive study of, and in that study recommend, the establishment of permanent bikeways and related facilities within the area described in paragraph (b) of this section. The study shall consider or include at least the following elements:

(1) The physical design for bikeways, intersections involving bikeways, and means of bicycle link-ups with other modes of transportation;

(2) The location of bikeways, including ascertaining high accident or pollution areas and developing means of avoiding or ameliorating those situations as well as means of providing intersection safety generally;

(3) The location of bicycle parking facilities, including bus stops;

(4) The rules of the road for bicyclists, and to the extent that present rules must be modified because of bikeways, new rules of the road for motorists. Also the feasibility of mandatory adult bicycle registration to minimize theft and increase recovery of stolen bicycles;

(5) Bicycle safety education for bicyclists, motorists, children, students, street maintenance personnel and policemen, including requiring bicycle safety principles and safe street riding skills to be taught in high school automobile driver(s) education programs;

(6) Methods for publicizing bicycles or bicycles plus mass transit as alternatives to automobile transportation, including the preparation, perhaps in conjunction with bicentennial efforts, of a master Boston area transit map, indicating the kind, extent and location of bicycle facilities, public baths, showers, toilet facilities, water fountains, as well as routes and stops for MBTA, common carriers and private bus lines, such map to be distributed by the Registry of Motor Vehicles with each automobile new registration and automobile registration renewal;

(7) Requiring or providing incentives for common carriers and mass transit carriers, especially the Blue Line of the MBTA, to provide bicycle parking facilities at their respective terminals and stations and bicycle carrying facilities on their respective vehicles;

(8) The creation of roadway zones in which all vehicles, except mass transit, emergency and service vehicles, and bicycles, would be excluded;

(9) Requiring or providing incentives for office buildings and employers to install and to provide free shower and locker facilities for cyclists;

(10) A bicycle user and potential user survey, which shall at a minimum determine:

(i) For present bicycle riders, the origin, destination, frequency, travel time, distance and purpose of bicycle trips;

(ii) In high density employment areas, the present modes of transportation of employees and the potential modes of transportation, including the numbers of employees who would use a bicycle for a significant portion of their commuting transportation were suitable facilities available to them. This section of the study shall seek to ascertain the size of the working population that would move from automobiles to mass transit and bicycles or bicycles alone as a significant form of transportation. It shall also seek to ascertain what bicycle facilities or mix thereof would produce the greatest conversion from auto use;

(11) The special problems related to the design and incorporation in the bikeway facilities described in paragraph (f) of this section of feeder bikeways to bridges, on-bridge bikeways, feeder bikeways to MBTA and railroad stations, feeder bikeways to fringe parking areas, and bicycle passage through rotaries and squares;

(12) The conversion of railroad beds, power lines, flood control channels or similar corridors to bikepaths;

(13) Removing barriers to employees bringing their bicycles into their offices;

(14) Removal or alteration of drain grates with bars so placed as to catch bicycle wheels;

(15) Bicycle rentals at appropriate locations; and

(16) The feasibility of constructing bikeways along at least each of the corridors set forth in paragraph (g) of this section.

In conducting the study, opportunity shall be given for public comments and suggestions. Input shall also be solicited from state, regional and local planning staffs, state, regional and local agencies, bicycle organizations and other interested groups and be related to comprehensive transportation planning for the area designated in paragraph (b) of this section. The study shall, using as a goal a minimum of 180 miles of bikeways, examine as large a network of facilities as is practicable within the area described in paragraph (b) of this section and shall recommend physical designs for said facilities. The study shall also propose a compliance schedule for establishing any recommended permanent bicycle facilities.

(d) The Commonwealth of Massachusetts shall submit to the Regional Administrator no later than October 1, 1975, a detailed compliance schedule showing the steps that will be taken to carry out the study required by paragraph (c) of this section. The compliance schedule shall at a minimum include:

(1) Designation of the agency responsible for conducting the study;

(2) A date for initiation of the study, which date shall be no later than October 1, 1975; and

(3) A date for completion of the study, and submittal thereof to the Administrator, which date shall be no later than June 30, 1976.

(e) On or before September 1, 1976, the Administrator shall publish in the

FEDERAL REGISTER his response to the study required by paragraph (c) of this section, and shall, in that response, either approve the facility location and designs and other requirements as well as the proposed compliance schedule for permanent facilities recommended in the study, or shall designate alternative and/or additional facility locations and designs and other requirements as well as modify the proposed compliance schedule for permanent facilities. The Administrator may provide, if he deems it necessary, for a public comment period prior to the effective date of his response.

(f) *Permanent bicycle facilities.* At the conclusion of the study required by paragraph (c) of this section and the Administrator's response thereto, the Commonwealth shall, together with the municipalities and other authorities having jurisdiction over affected roadways and areas establish permanent bicycle facilities as required by the Administrator's response to the study.

(g) The potential bikeway corridors to be studied pursuant to paragraph (c)(16) are as follows:

(1) Central Square, Cambridge to Boston University;

(2) Harvard Square, Cambridge to Union Square, Allston;

(3) Union Square, Somerville to Central Square, Cambridge;

(4) Union Square, Allston to Government Center;

(5) Harvard Square, Cambridge to Government Center;

(6) Brookline Village to Government Center;

(7) Boston University to Longwood Avenue Hospital Zone;

(8) Egleston Square to Government Center;

(9) Columbus Park to Boston Common;

(10) L Street Beach to Government Center;

(11) Powder House Circle, Somerville to Harvard Square;

(12) Everett to Government Center;

(13) Porter Square, Cambridge to Columbus Park, Boston;

(14) Cleveland Circle to Government Center;

(15) Porter Square, Cambridge to Government Center;

(16) Harvard Square, Cambridge to Boston City Hospital; and

(17) Charlestown, Longfellow, Harvard, Boston University, River Street, Western Avenue, Anderson, Summer Street, and Broadway Bridges.

(h) The MBTA shall provide bicycle parking facilities at each major MBTA station adequate to meet the needs of MBTA riders within the area designated in paragraph (b) of this section. Said parking facilities shall at a minimum be located at:

(1) All stations of the Riverside portion of the Green Line;

(2) Reasonably spaced stops on other portions of the Green Line;

(3) All stations of the Red, Orange, and Blue Lines; and shall have spaces for at least six bicycles per station, except for facilities at terminal stations which shall have spaces for at least 24 bicycles.

(i) The Commonwealth shall provide for advertisement of bikeways and bicycle parking facilities in use within the area designated in paragraph (b) of this section to potential users by means of media advertisement, the distribution and posting of bikeway maps and bike safety information, as well as for a program of bicycle safety education including the motor vehicle operators license examination and public service advertisement.

[40 FR 25168, June 12, 1975]

§ 52.1163 Additional control measures for East Boston.

(a) On or before December 31, 1975, the Governor, the Mayor of the City of Boston, the Chairman of the Massachusetts Bay Transportation Authority, the Chairman of the Massachusetts Turnpike Authority and the Chairman of the Massachusetts Port Authority (''Massport'') shall each submit to the Regional Administrator a study or studies of various alternative strategies to minimize the number of vehicle trips to and from Logan International Airport (''Logan Airport'') and to reduce the amount of carbon monoxide in the vicinity of the Callahan and Sumner Tunnels to a level consistent with the national primary ambient air quality standards. These studies may be

combined into one or more joint studies. These studies shall contain recommendations for control measures to be implemented prior to May 31, 1977. Measures to be studied shall include but need not be limited to, the following:

(1) Incentives and programs for reductions in the use of single-passenger vehicles through the Callahan and Sumner Tunnels;

(2) Alterations in traffic patterns in the tunnel area;

(3) Use of exclusive lanes for buses, carpools, taxis and limousines during peak travel hours;

(4) Reduction of parking spaces at Logan Airport and increased parking charges at remaining spaces;

(5) Construction of satellite terminal facilities for Logan Airport;

(6) Use of alternate modes of transportation for trips to and from Logan Airport, and establishment of facilities at Logan Airport to accommodate such modes;

(7) Improved transit service between the Blue Line subway stop and airline terminals at Logan Airport; and

(8) Any other measures which would be likely to contribute to achieving the required reductions.

(b) Massport shall monitor the number of vehicles entering and leaving Logan Airport so as to provide the Secretary of Transportation for the Commonwealth (the ''Secretary'') with reports on a semi-annual basis, beginning on January 30, 1976, showing total vehicle trips per day for the six-month period ending on the previous December 31 or June 30, presented and tabulated in a manner prescribed by the Secretary.

(c) Massport shall, on or before June 30, 1976, prepare and submit to the Secretary draft legislation which, if enacted into law, would alleviate local licensing problems of bus and limousine companies in order to facilitate increased and improved bus and limousine service for travelers using Logan Airport.

(d) Massport shall negotiate with the Massachusetts Bay Transportation Authority to increase the convenience of the mass transit services currently available to travelers to Logan Airport.

(e) Massport shall, on or before June 30, 1976, establish and maintain a program (which shall include the enclosure of this information in tickets or folders mailed by airlines using Logan Airport) to publicize the advantages in costs and convenience of the use of mass transit or other available transportation services by travelers using the airport, and making known to such persons the schedules, routes, connections, and other information necessary for them to conveniently use mass transit and such other services.

(f) Massport shall, on or before October 15, 1975, establish a carpool program at Logan Airport, which shall include the elements specified in paragraphs (b)(7) (A) through (C) of § 52.1161. For the purpose of applying the requirements of § 52.1161 to the present paragraph:

(1) The definitions in § 52.1161 shall apply;

(2) Each employer with any employment facility at Logan Airport shall cooperate with Massport in the development and implementation of the program;

(3) Any such employer (including Massport) may fulfill its obligations under paragraph (b)(7) of § 52.1161 by fully cooperating with and participating in the Logan Airport carpool program (including bearing its proportional share of the program's cost); and

(g) Massport shall, on or before October 15, 1975, implement a program of systematic dissemination to employers and employees at Logan Airport of information regarding the Massachusetts Bay Transportation Authority pass program, bus and train schedules and rates, park-and-ride facilities, and other transportation programs and services available to employees at Logan Airport.

(h) Massport shall, on or before January 1, 1976, implement and maintain a program to allow all employees at Logan Airport, regardless of the size of the particular employment facility at which they work, to participate in any available pass program made available by the Massachusetts Bay Transportation Authority, including the use of Massport as a central clearinghouse for the purpose of aggregating employees

and for fiscal management of such pass program.

[40 FR 25169, June 12, 1975]

§ 52.1164 Localized high concentrations—carbon monoxide.

(a) Not later than October 1, 1975, the Commonwealth shall have developed and have begun to implement a program to identify urban and suburban core areas and roadway/intersection complexes within the Boston Intrastate Region which violate the national ambient air quality standards for carbon monoxide. Once such localized areas have been identified, the Commonwealth, in cooperation with the affected local municipalities, shall develop and implement appropriate control strategies to insure that such air quality standards will be achieved at such areas. Plans shall be developed to include provisions for the entire municipality in order to insure that the implemented strategies will not create carbon monoxide violations elsewhere in the vicinity after the measures have been applied.

(b) To accomplish the requirements of paragraph (a) of this section, the Commonwealth shall do the following:

(1) Identify areas of potentially high carbon monoxide concentrations by reviewing all available traffic data, physical site data and air quality and meteorological data for all major intersections and roadway complexes within the Region. The Regional Administrator will provide general guidance on area designations to assist in the initial identification process.

(2) Areas identified under paragraph (b)(1) of this section shall be studied in further detail, including meteorological modeling, traffic flow monitoring, air quality monitoring and other measures necessary to accurately quantify the extent and actual levels of carbon monoxide in the area. A report containing the results of these analyses and identifying such areas shall be submitted to the Regional Administrator no later than March 1, 1976.

(3) If, after the completion of actions required by paragraph (b)(2) of this section, an area shows or is predicted to have violations of the carbon monoxide standard, the Commonwealth, in cooperation with the affected municipality, shall submit a plan to the Regional Administrator containing measures to regulate traffic and parking so as to reduce carbon monoxide emissions to achieve air quality standards in the area. Such plan shall include: the name of the agency responsible for implementing the plan, all technical data and analyses supporting the conclusions of the plan, all control strategies adopted as part of the plan, and other such information relating to the proposed program as may be required by the Regional Administrator. The Regional Administrator shall provide general guidance on applicable control strategies and reporting formats to assist in plan development and submittal. Such a plan shall be submitted for each municipality which contains one or more identified areas no later than October 1, 1975 for Waltham and October 1, 1976, for other areas.

(4) All measures called for in the plan submitted under paragraph (b)(3) of this section shall be subject to the approval of the Regional Administrator and shall be implemented by May 31, 1977.

(c) The Commonwealth shall annually review the effectiveness of the control strategies developed pursuant to this section and modify them as necessary to insure that such carbon monoxide standards will be attained and maintained. The results of this review and any changes in the measures which the Commonwealth recommends as a result thereof shall be reported to the Regional Administrator annually as required under § 52.1160.

(d) Prior to submitting any plan to the Regional Administrator under paragraph (b)(3), the Commonwealth shall give prominent public notice of the general recommendations of such plan, shall make such plan available to the public for at least 30 days and permit any affected public agency or member of the public to comment in writing on such plan. The Commonwealth shall give the Regional Administrator timely notice of any public hearing to be held on such plan and shall make all comments received available to the Regional Administrator for inspection and copying.

[40 FR 25170, June 12, 1975]

§ 52.1165 Significant deterioration of air quality.

(a) The requirements of sections 160 through 165 of the Clean Air Act are not met, since the plan does not include approvable procedures for preventing the significant deterioration of air quality.

(b) Regulation for preventing significant deterioration of air quality. The provisions of § 52.21 (b) through (v) are hereby incorporated and made a part of the applicable State plan for the State of Massachusetts.

[43 FR 26410, June 19, 1978]

§ 52.1166 [Reserved]

§ 52.1167 EPA-approved Massachusetts State regulations.

The following table identifies the State regulations which have been submitted to and approved by EPA as revisions to the Massachusetts State Implementation Plan. This table is for informational purposes only and does not have any independent regulatory effect. To determine regulatory requirements for a specific situation consult the plan identified in § 52.1120. To the extent that this table conflicts with § 52.1120, § 52.1120 governs.

TABLE 52.1167—EPA-APPROVED RULES AND REGULATIONS

[See NOTES at end of Table]

State citation	Title/subject	Date submitted by State	Date approved by EPA	Federal Register citation	52.1120(c)	Comments/unapproved sections
310 CMR 7.00	Definitions	2/14/85	9/25/85	50 FR 38804	64	Motor vehicle fuel.
		2/21/86; 2/25/86; 6/23/86	8/31/87	52 FR 32792	73	Two new definitions and one amended definition.
	Statutory authority; legend; preamble; definitions	11/5/86; 12/10/86	11/19/87	52 FR 44395	74	Approving the addition of definitions for synthetic organic chemical manufacturing facility, component, in gas service, light liquid, in light liquid service, leak, leaking component, monitor, repair, unit turnaround, in VOC service, quarterly, and pressure relief valve.
310 CMR 7.00	Definitions	7/18/88	5/4/89	54 FR 19184	78	Includes bulk plant and terminal, gasoline market.
310 CMR 7.00	Definitions	1/30/91	10/8/92	57 FR 46312	96	Definitions of no-build alternative, project area, project roadway, and tunnel ventilation system.
310 CMR 7.00	Definitions	05/17/90, 06/07/91	12/14/92	57 FR 58996	97	Added ''motor vehicle fuel,'' ''motor vehicle fuel dispensing facility,'' ''substantial modification,'' and ''vapor collection and control system.''
310 CMR 7.00	Definitions	8/17/89; 6/7/91	1/11/93	58 FR 3495	93	Approving the following amended or additional definitions: Application area, asphalt, automobile, bottom filling, bulk terminal, coating line(s), commissioner, condensate, continuous compliance, crude oil, department, end sealing compound, exterior base coat, extreme environmental conditions, flashoff area, freeboard height, freeboard ratio, halogenated organic compound, interior base coat, interior body spray, knife coating, lease custody transfer, light duty truck, manufacturing plant, miscellaneous metal parts and products, overvarnish, paper surface coating, penetrating prime coat, petroleum liquids, prime coat, publication rotogravure printing, quench area, refrigerated chiller, Reid vapor pressure, roll printing, roll coating, single coat, solids, specialty printing, splash filling, standard conditions, submerged filling, three piece can side seam spray, topcoat, transfer efficiency, two piece can exterior end coating, vinyl surface coating, volatile organic compound, waxy, heavy pour crude oil. The definitions of ''coating application system'' and ''bulk plants and terminals'' have been deleted.

TABLE 52.1167—EPA-APPROVED RULES AND REGULATIONS—Continued

[See NOTES at end of Table]

State citation	Title/subject	Date submitted by State	Date approved by EPA	Federal Register citation	52.1120(c)	Comments/unapproved sections
310 CMR 7.00	Definitions	8/27/82, 6/22/87, 12/27/89	2/23/93	58 FR 10970	84	Approving the definitions of ''stationary source'' and ''building, structure, facility, or installation.''
310 CMR 7.00	Definitions	6/7/91	6/30/93	58 FR 34911	58	Definitions: Bulk plants, vapor balance systems.
310 CMR 7.00	Definitions	12/9/91	10/4/94	59 FR 50498	101	Definitions of baseline roadway conditions, high occupancy vehicle, high occupancy vehicle lane, peak hour, performance standard, and roadway threshold standard.
310 CMR 7.00	Definitions	11/15/93 05/11/94	2/1/95	60 FR 6030	103	Approving additional definitions for.
310 CMR 7.00: Appendix B.	Alternative Emission Limitations (Bubble) for Volatile Organic Compounds.	4/12/85; 8/17/89	1/11/93	58 FR 3495	93	Addition of 310 CMR 7.00: Appendix B.
310 CMR 7.00 and 7.02(12)(c).		2/14 and 5/22/85	9/25/85	50 FR 38806	64	Motor vehicle fuel tank trucks.
310 CMR 7.02	Plans and approval and emission limitations	4/27/72	10/28/72	37 FR 23085	2	
		8/28/72	10/28/72	37 FR 23085	4	
		5/27/82 9/9/82	1/10/84	49 FR 1187	60	7.02(2)(b)(4) and 7.02(2)(5) for new source review.
		12/3/85 1/31/86 2/11/86	11/25/86	51 FR 42564	69	Adds the word ''major'' before the word ''modification'' at 7.02(2)(b).
310 CMR 7.02	Plans and approval and emission limitation	.....	.....		.....	
		11/21/86 1/15/87	3/10/89	54 FR 10148	72	7.02(2)(b) 4, 5 and 6-new source review.
310 CMR 7.02(11)	Emission limitations for incinerators	2/1/78	3/15/79	44 FR 15704	18	Adds an emission limitation for sewage sludge incinerators.
310 CMR 7.02(12)	U Organic Material	8/17/89	1/11/93	58 FR 3495	93	310 CMR 7.02(12) has been recodified and relocated in 310 CMR 7.24, ''U Organic Material Storage and Distribution.'' All subsections and references in 310 CMR 7.02(12) have been recodified accordingly.
310CMR 7.02(12)	U Restricted Emission Status	6/6/94	4/5/95	60 FR 17229	105	This rule limits a source's potential to emit, therefore avoiding RACT, title V operating permits
310 CMR 7.02(12)(a)(b).	Organic material, bulk plants and terminals handling organic material.	12/31/78 5/16/79	9/16/80	45 FR 61293	30	
310 CMR 7.02(12)(a)1e.	Gasoline liquid storage in external floating roof tanks.	12/2/83	3/8/84	49 FR 8611	56	Approved for secondary seals or equivalent weather roofs.
310 CMR 7.02(12)(b)2.	Stage I vapor recovery	5/20/77	5/25/78	43 FR 22356	15	Provisions for Pioneer APCD Stage I vapor recovery.
		12/31/78 5/16/79	9/16/80	45 FR 61293	30	
		3/25/83	7/7/83	48 FR 31200	55	Exempt Berkshire APCD.

310 CMR 7.02(12)(b)3.	Stage I vapor recovery	11/21/86 1/15/87	3/10/89	54 FR 10148	72	7.02(12)(b)3 is deleted.
310 CMR 7.02(12)(c) and (d).	Gasoline Tank Trucks	2/14/85 5/22/85	9/25/85	50 FR 38804	64	Tank trucks.
310 CMR 7.02(12)(d).	Test Methods applicable to 310 CMR 7.02(12)	11/21/86 1/15/87	3/10/89	54 FR 10148	72	Requires EPA approved test methods or EPA approved alternatives.
310 CMR 7.02(12)(e).	Gasoline Volatility	7/18/88 9/15/88 4/12/89	5/4/89	54 FR 19184	78	Approves a limitation on volatility of gasoline from June 30 for Sept. 15, 1989, and May 1 to Sept. 15 in subsequent years.
310 CMR 7.04(5)	Fuel oil viscosity	12/28/78	6/17/80	45 FR 40987	29	For Cambridge Electric Light Company's Kendal Station, and Blackstone Station.
		12/28/78	10/18/80	45 FR 48131	29	Correction notice.
310 CMR 7.05	Sulfur-in-fuel	8/28/72	10/28/72	37 FR 23058	4	
		7/5/78	2/7/79	44 FR 7712	17	Approves the burning of coal/oil slurry at New England Power Company, Salem Harbor Station, MA.
310 CMR 7.05(1)(a).	Sulfur content of fuels and control thereof for Berkshire APCD.	4/14/77	3/24/78	43 FR 12324	13	Approves the burning of 1% for all but: Crane and Company Inc., and Schweitzer Division, Kimberly Clark Corporation, Columbia Mill.
		4/14/77 8/11/78 8/31/78	3/7/79	44 FR 12422	13	Approves the burning of 2.2% at Crane & Co., Inc., and Schweitzer Division, Kimberly-Clark Corp., Columbia Mill.
		11/8/82	4/28/83	48 FR 19172	54	Approves burning of 2.2% at Esleek Manufacturing Company, Inc., provided the fuel firing rate does not exceed 137.5 gallons per hour.
310 CMR 7.05(1)(b).	Sulfur content of fuels and control thereof for Central APCD.	6/25/76	2/15/77	42 FR 9176	10	Approves the burning of 2.2% until 7/1/78 for 100 mBtu sources listed in 52.1126.
		3/29/76 5/25/76	5/19/77	42 FR 25730	11	Approves burning of 2.2% at James River Associates, Inc. and part of Fitchburg Paper Company, April through October. November through March, they are limited to burning 1% sulfur-in-fuel oil.
		6/25/76 8/22/77	6/21/78	43 FR 26573	10	Extends expiration date to 6/21/78.
		3/2/79	7/16/79	44 FR 41180	24	Permanent extension for certain sources to burn 2.2% under specified conditions.
	Sulfur content of fuels and control thereof for central APCD.	9/28/79	6/17/80	45 FR 40987	24	Approves the burning of 2.2% at Fitchburg Paper (55 Meter stacks only) for James River, Massachusetts, Inc., year round.
		3/20/80	9/10/80	45 FR 59578	31	Approves the temporary burning of 2.2% at Seaman Paper Co., Templeton.
		3/2/79 5/5/81	9/17/81	46 FR 46133	33	Approves the burning of 2.2% at Millers Falls Paper Co.
310 CMR 7.05(1)(c).	Sulfur content of fuels and control thereof for Merrimack Valley.	6/4/76	12/30/76	41 FR 56804	8	Approves the burning of 2.2% except at those sources listed in 52.1126.
		1/28/76 12/30/76 1/28/76	7/12/77	42 FR 35830	8	Approves burning of 1.4% at Haverhill Paperboard Corp., Haverhill, MA.
		8/22/77 12/30/76	6/21/78	43 FR 26573	8	Extends expiration date to 7/1/79.
		12/28/78	5/21/79	44 FR 29453	20	Permanent extension to burn 2.2%.

TABLE 52.1167—EPA-APPROVED RULES AND REGULATIONS—Continued

[See NOTES at end of Table]

State citation	Title/subject	Date submitted by State	Date approved by EPA	Federal Register citation	52.1120(c)	Comments/unapproved sections
310 CMR 7.05(1)(d).	Sulfur content of fuels and control thereof for Metropolitan Boston APCD.	7/11/75 9/16/75	12/5/75	40 FR 56889	6	Approves burning of 1% for large electric generating facilities in certain cities and towns and 2.2% for smaller facilities. Effective 7/1/75 to 7/1/77.
		7/11/75 4/1/77	8/22/77	42 FR 42218	6	Extends expiration date from 7/1/77 to 7/1/78 except for Eastman Gelatin Corp., which must burn 1%.
		4/20/78	11/30/78	43 FR 56040	6	Extends expiration date from 7/1/78 to 7/1/79.
	Sulfur content of fuels and control thereof for Metropolitan Boston APCD.	12/28/78	5/21/79	44 FR 29453	20	Permanent extension to burn 2.2%.
		4/25/80	1/27/81	46 FR 8476	34	Approves the burning of 2.2% at Natick Paperboard Corp.
		11/25/80	8/11/81	46 FR 40688	38	Approves the increase to 2.2% at Boston Edison Mystic Generating Station for 30 months from 8/11/81 (expires 2/11/84).
		7/14/81	12/16/81	46 FR 61123	41	Approves burning of 2.2% at Haverhill Paper Corp.
		11/27/79	12/15/80	45 FR 82251	32	Allows the burning of 2.2% at Proctor and Gamble.
		9/24/81	12/15/81	46 FR 61118	43	Approves burning of 2.2% at Eastman Gelatin Corp.
		12/7/83	9/25/84	49 FR 37592	65	Approves burning of 2.2% at Boston Edison Mystic Generating Station until 3/25/87.
310 CMR 7.05(1)(e).	Sulfur content of fuels and control thereof for Pioneer Valley APCDs.	7/22/77	2/1/77	42 FR 5957	9	Approves 2.2% except for sources listed in 52.1125.
		7/22/76 8/22/77 12/27/77	6/21/78	43 FR 26573	9	Extends expiration date to 7/1/79.
		1/3/79	5/21/79	44 FR 29453	21	Permanent extension to burn 2.2%
		3/2/80	1/19/81	45 FR 4918	33	Approves the burning of 2.2% at all sources in Franklin and Hampshire Counties rated at less than 100 mBtu except Esleek Manufacturing Co., and Millers Falls Paper Co.
		10/13/81	2/10/82	47 FR 6011	45	Approves the burning of 2.2% at Holyoke Gas and Electric Department, Holyoke, MA.
		7/18/84 4/17/85 3/16/87 11/25/87	2/15/90	55 FR 5449	77	Approves the burning of 2.2% and imposes fuel use limits at American Fiber and Finishing Co., Erving Paper Co., and Westfield River Paper Co.
310 CMR 7.05(1)(f).	Sulfur content of fuels and control thereof for Southeastern APCD.	12/30/76	9/2/77	42 FR 44235	12	Approves burning of 2.2% for sources listed in 52.1126, all others must continue to burn 1%.
		12/30/76 1/31/78	9/8/78	43 FR 40010	12	Extends expiration date from 5/1/78 to 7/1/79.
		1/31/79	5/21/79	44 FR 29453	22	Permanent extension to burn 2.2%.
310 CMR 7.05(4)	Ash content of fuels for Pioneer Valley for APCD ...	1/3/79	5/21/79	44 FR 29453	21	
	Ash content of fuels for Metropolitan Boston APCD	7/20/79	5/21/79	44 FR 29453	23	

	Ash content of fuels	12/3/85 1/31/86 2/11/86	11/25/86	51 FR 42564	69	Includes Berkshire Air Pollution Control District to 7.05(4)(b)(2) so facilities in that district can apply to burn fossil fuel with an ash content in excess of 9 pct bydry weight.
310 CMR 7.06	Visible emissions	8/28/72	10/28/72	37 FR 23085	4	
		7/5/78	2/7/79	44 FR 7712	17	Approves New England Power Company, Salem Harbor Station to burn a coal oil slurry.
		12/28/79	8/12/80	45 FR 53476	17	Extension of temporary revision to allow exceedance of 20% capacity limit at New England Power Company's Salem Harbor Station, Salem, MA Unit 1 so can burn 30% coal/70% oil mixture until 12/31/80.
310 CMR 7.07	Open burning	12/9/77	9/29/78	43 FR 44841	16	Two revisions with conditions to permit open burning of brush cane, driftwood and forest debris for 2 months of the year.
	Open burning	9/28/79	6/17/80	45 FR 40987	27	Approves open burning (as in (c) 16) from 1/15 to 5/1 in certain areas of the State.
310 CMR 7.08	Incinerators	8/28/72	10/28/72	37 FR 23085	4	
310 CMR 7.09	Dust and odor	8/28/72	10/28/72	37 FR 23085	4	
		12/9/77	9/29/78	43 FR 44841	16	Adds a requirement that mechanized street sweeping equipment must be equipped and operated with a suitable dust collector or suppression system.
310 CMR 7.12	Inspection Certificate Record Keeping and Reporting.	6/28/90; 9/30/92; 7/15/94	3/21/96	61 FR 11560	106	The 6/28/90 and 9/30/92 submittals deal with the permitting process. The 7/15/94 submittal develops 7.12 to comply with emission statement requirements.
310 CMR 7.14(2)	Continuous Emissions Monitoring	11/21/86 1/15/85	3/10/89	54 FR 10148	72	References 40 CFR part 51, Appendix P.
310 CMR 7.14(3)	Continuous Emissions Monitoring	11/21/86 1/15/87	3/10/89	54 FR 10148	72	Establishes compliance date for meeting the requirements of 7.14(2).
310 CMR 7.15	Asbestos application	8/28/72	10/28/72	37 FR 23085	4	
310 CMR 7.16	Reduction to single passenger commuter vehicle use.	5/20/77	5/25/78	43 FR 22356	15	For Pioneer Valley APCD.
		12/31/78 5/16/79	9/16/80	45 FR 61293		Reduction of single occupant commuter vehicles.
310 CMR 7.17	Coal conversion	9/7/78	5/14/79	44 FR 27991	19	Brayton Point Station, New England Power Company.
		1/22/82	6/9/82	47 FR 25007	49	Mount Tom Plant, Holyoke, MA Holyoke Water Power Company.
310 CMR 7.18(1)	U Applicability and Handling Requirements	8/17/89	1/11/93	58 FR 3495	93	Approval of 310 CMR CMR 7.18(1), (a), (c), (d) and (e).
310 CMR 7.18(2)	U Compliance with Emission Limitations	8/27/82; 8/17/89; 6/7/91	1/11/93	58 FR 3495	93	Approval of 310 CMR 7.18(2), (2)(a), (2)(b), (2)(c) and (2)(e).
310 CMR 7.18(2)(b).	Generic VOC bubble for surface coaters	3/6/81 11/12/81	3/29/82	47 FR 13143	42	Includes surface coating of metal cans, large appliances, magnet wire insulation, automobiles, paper fabric and vinyl.
	Generic VOC bubble for surface coaters	6/24/80	7/12/82	47 FR 30060	47	Adds metal coils.

TABLE 52.1167—EPA-APPROVED RULES AND REGULATIONS—Continued

[See NOTES at end of Table]

State citation	Title/subject	Date submitted by State	Date approved by EPA	Federal Register citation	52.1120(c)	Comments/unapproved sections
		7/21/81 3/10/81	6/2/82	47 FR 23927	48	Adds miscellaneous metal parts and products and graphic arts-rotogravure and flexography.
		9/9/82	2/3/83	48 FR 5014	53	Adds metal furniture.
310 CMR 7.18 (2)(e).	Compliance with emission limitations	.....	3/6/89	54 FR 9213	.....	Testing requirements for plan approvals issued under 310 CMR 7.18(17).
310 CMR 7.18(3)	Metal furniture surface coating	12/31/78 5/16/79	9/16/80	45 FR 61293	30	
		9/9/82	11/9/83	48 FR 51480	53	Adds test methods.
310 CMR 7.18(3)	U Metal Furniture Surface Coating	8/17/89; 6/7/91	1/11/93	58 FR 3495	93	Replacement of 310 CMR 7.18(3).
310 CMR 7.18(4)	Metal can surface coating	12/31/78 5/16/79	9/16/80	45 FR 61293	30	
		9/9/82	11/9/83	48 FR 51480	53	Adds test methods.
310 CMR 7.18(4)	U Metal Can Surface Coating	8/17/89; 6/7/91	1/11/93	58 FR 3495	93	Replacement of 310 CMR 7.18(4).
310 CMR 7.18(5)	Large appliances surface coating	12/31/78 5/16/79	9/16/80	45 FR 61293	30	
		9/9/82	11/9/83	48 FR 51480	53	Adds test methods.
310 CMR 7.18(5)	U Large Appliance Surface Coating	8/17/89; 6/7/91	1/11/93	58 FR 3495	93	Replacement of 310 CMR 7.18(5).
310 CMR 7.18(6)	Magnet wire insulation surface coating	12/31/78 5/16/79	9/16/80	45 FR 61293	30	
		9/9/82	11/9/83	48 FR 51480	53	Adds test methods.
310 CMR 7.18(6)	U Magnet Wire Insulation Surface Coating	8/17/89; 6/7/91	1/11/93	58 FR 3495	93	Replacement of 310 CMR 7.18(6).
310 CMR 7.18(7)	Automobile surface coating	12/31/78 5/16/79	9/16/80	45 FR 61293	30	
		9/9/82	11/9/83	45 FR 51480	53	Adds test methods.
310 CMR 7.18(7)	Automobile Surface Coating	8/17/89, 6/7/91	10/8/92	57 FR 46316	92	
310 CMR 7.18(8)	Solvent metal degreasing	12/31/78 5/16/79	9/16/80	45 FR 61293	30	Conditional approval requiring controls for small solvent metal degreasers.
		8/13/83	11/9/83	48 FR 51480	53	Approves public education program for small degreasers and removes conditional approval.
310 CMR 7.18(8)	U Solvent Metal Degreasing	8/17/89	1/11/93	58 FR 3495	93	Approval of 310 CMR 7.18(8), (8)(d), (8)(d)1., (8)(e), (8)(f) and (8)(g).
310 CMR 7.18(8)	U Solvent Metal Degreasing	6/7/91	6/30/93	58 FR 34911	58	Approval of 310 CMR 7.18 (8), (8)(a), (8)(a)1., (8)(a)2., (8)(a)3., (8)(a)4., (8)(a)5., (8)(a)6., (8)(b), (8)(b)1., (8)(b)2., (8)(b)3., (8)(b)4., (8)(b)5., (8)(b)6., (8)(b)7., (8)(b)8., (8)(b)9., (8)(b)10., (8)(b)11., (8)(b)12., (8)(b)13., (8)(c), (8)(c)1., (8)(c)2., (8)(c)3., (8)(c)4., (8)(c)5., (8)(c)6., (8)(c)7., (8)(c)8., (8)(c)9., (8)(d)2., (8)(d)3.

310 CMR 7.18(9)	Cutback asphalt	12/31/78	9/16/80	45 FR 61293	30	
		5/16/79				
		9/9/82	11/9/83	48 FR 51480	53	Adds an exemption.
310 CMR 7.18(9)	U Cutback Asphalt	8/17/89	1/11/93	58 FR 3495	93	Replacement of 310 CMR 7.18(9).
310 CMR 7.18(10)	Surface coating of metal coils	6/24/80	7/12/82	47 FR 30060	47	Approves and adds to 310 CMR 7.18(2)(b).
		9/9/82	11/9/83	48 FR 51480	53	Adds test methods and removes extended compliance schedule.
310 CMR 7.18(10)	U Metal Coil Coating	8/17/89; 6/7/91	1/11/93	58 FR 3495	93	Replacement of 310 CMR 7.18(10).
310 CMR 7.18(11)	Surface coating of miscellaneous metal parts and products.	7/21/81	6/2/82	47 FR 23927	48	Adds to 310 CMR 7.18(2)(b).
		3/10/82				
		9/9/82	11/9/83	48 FR 51480	53	Adds test methods.
310 CMR 7.18(11)	U Surface Coating of Miscellaneous Metal Parts and Products.	8/17/89	1/11/93	58 FR 3495	93	Approval of 310 CMR 7.18(11), (11)(b), (11)(c), (11)(d) and (11)(e).
310 CMR 7.18(11)	U Surface Coating of Miscellaneous Metal Parts and Products.	6/7/91	6/30/93	58 FR 34911	58	Approval of 310 CMR 7.18 (11), (11)(a), (11)(a)1., (11)(a)2., (11)(a)3.
310 CMR 7.18(12)	Graphic arts-rotogravure and flexography	7/21/81	6/2/82	47 FR 23927	48	Adds to 310 CMR 7.18(2)(b).
		3/10/82				
		9/9/82	11/9/83	48 FR 51480	53	
310 CMR 7.18(12)	U Graphic Arts	8/17/89; 6/7/91	1/11/93	58 FR 3495	93	Replacement of 310 CMR 7.18(12).
310 CMR 7.18(13)	Perchloroethylene dry cleaning systems	7/21/81	6/2/82	47 FR 23927	48	
		3/10/82				
		9/9/82	11/9/83	48 FR 51480	53	Adds test methods.
310 CMR 7.18(13)	U Dry Cleaning Systems-Percholor-ethylene	8/17/89	1/11/93	58 FR 3495	93	Approval of 310 CMR 7.18(13), (13)(c), (13)(d) and (13)(e). 310 CMR 7.18(13)(a) 8. has been deleted.
310 CMR 7.18(14)	Paper surface coating	3/6/81	3/8/82	47 FR 9836	40	
		9/9/82	11/9/83	48 FR 51480	53	Adds test methods.
310 CMR 7.18(14)	U Paper Surface Coating	8/17/89; 6/7/91	1/11/93	58 FR 3495	93	Replacement of 310 CMR 7.18(14).
310 CMR 7.18(15)	Fabric surface coating	3/6/81	3/8/82	47 FR 9836	40	
		9/9/82	11/9/83	48 FR 51480	53	Adds test methods.
310 CMR 7.18(15)	U Fabric Surface Coating	8/17/89; 6/7/91	1/11/93	58 FR 3495	93	Replacement of 310 CMR 7.18(15).
310 CMR 7.18(16)	Vinyl surface coating	3/6/81	3/8/82	47 FR 9836	40	
		9/9/82	11/9/83	48 FR 51480	53	Adds test methods.
310 CMR 7.18(16)	U Vinyl Surface Coating	8/17/89; 6/7/91	1/11/93	58 FR 3495	93	Replacement of 310 CMR 7.18(16).
310 CMR 7.18(17)	RACT	9/9/82	11/9/83	48 FR 51480	53	All 100 ton per year sources not covered by a CTG.
	RACT	.....	3/6/89	54 FR 9213	.....	Enforceability of plan approvals issued under 310 CMR 7.18(17).
		6/20/89	11/3/89	54 FR 46388	81	RACT for Cranston Print Works Company dated June 20, 1989.
		7/12/89	11/8/89	54 FR 46895	80	RACT for Spalding Corporation Plan Approval dated October 7, 1985 and amended Plan Approval dated July 12, 1989.
		8/8/89	11/8/89	54 FR 46897	82	RACT for Duro Textile Printers (SM–85–168–IF).

TABLE 52.1167—EPA-APPROVED RULES AND REGULATIONS—Continued

[See NOTES at end of Table]

State citation	Title/subject	Date submitted by State	Date approved by EPA	Federal Register citation	52.1120(c)	Comments/unapproved sections
		6/20/89	2/21/90	55 FR 5990	79	RACT Compliance Plan Conditional Approval for Monsanto Chemical Company in Indian Orchard dated 6/20/89.
		11/17/89	8/3/90	55 FR 31590	85	RACT for Boston Whaler in Norwell. Amended Plan Approval 4P89005 dated October 19, 1989 and Plan Approval 4P89005 Correction dated Nov. 17, 1989.
		11/17/89	8/3/90	55 FR 31593	86	RACT for Boston Whaler in Rockland. Amended Plan Approval (4P89006) dated October 19, 1989 and Plan Approval 4P89006 Correction dated November 17, 1989.
	Non-CTG RACT determination	11/2/89	11/27/90	55 FR 34915	87	RACT for Philips Lighting Company in Lynn, MA, dated November 2, 1989.
	RACT	7/9/90	2/19/91	56 FR 6569	89	RACT for General Motors Corporation in Framingham. Amended Plan Approval dated June 8, 1990.
	RACT	6/13/90	2/27/91	56 FR 8132	88	RACT for Acushnet Company, Titleist Golf Division, Plant A in New Bedford. Amended Plan Approval dated June 1, 1990.
	RACT	10/16/90	3/20/91	56 FR 11677	90	RACT for Erving Paper Mills.
	RACT	4/22/90	10/8/91	56 FR 50660	91	RACT amendment for Erving.
310 CMR 7.18(17)	RACT	5/13/91	12/14/92	57 FR 58993	95	RACT for Dartmouth Finishing Corporation.
310 CMR 7.18(17)	U Reasonable Available Control Technology	8/17/89; 6/7/91	1/11/93	58 FR 3495	93	Approval of 310 CMR 7.18(17), (17)(a), (17)(b), (17)(c), (17)(d), (17)(e) and (17)(f).
310 CMR 7.18(17)	RACT	5/22/92	7/28/94	59 FR 38374	(99)	RACT Approval for S. Bent & Bros.
310 CMR 7.18(17)	RACT	7/19/93 1993	1/6/95	60 FR 2017	100	RACT Approval for Nichols & Stone Co.
310 CMR 7.18(17)	Reasonably Available Control Technology	3/31/94	3/6/95	60 FR 12125	104	RACT for Brittany Dyeing and Finishing of New Bedford, MA.
310 CMR 7.18(18)	Polystyrene Resin Manufacture	2/21/86; 2/25/86; 6/23/86	8/31/87	52 FR 32792	73	Regulation pursuant to Group III CTG, "Control of VOC Emissions from the Manufacture of Polystyrene Resins".
310 CMR 7.18(18)	U Polystyrene Resin Manufacturing Technology	8/17/89; 6/7/91	1/11/93	58 FR 3495	93	Replacement of 310 CMR 7.18(18).
310 CMR 7.18(19)	Synthetic organic chemical manufacture	11/5/86; 12/10/86	11/19/87	52 FR 44395	74	
310 CMR 7.18(28)	Automotive Refinishing	01/09/95	2/14/96	61 FR 5699	109	Reasonably Available Control Technology Requirement (RACT) for automotive refinishing.
310 CMR 7.19	Interim sulfur-in-fuel limitations for fossil fuel utilization facilities pending conversion to an alternate fuel or implementation of permanent energy conservation measures.	9/12/80	3/19/81	46 FR 17551	37	Energy/environment initiative.

		12/29/81	4/13/82	47 FR 15790	46	ATF Davidson Company, Northbridge, MA temporary sulfur-in-fuel revision until 12/1/83.
		9/28/82	12/1/82	47 FR 54072	52	Polaroid Corp., Waltham, MA temporary sulfur/in/fuel relaxation until 6/1/85.
			6/2/83	48 FR 24689	52	Correction notice.
		9/29/82	11/23/82	47 FR 52704	51	Northeast Petroleum Corp., Chelsea, MA sulfur content increase from 0.28 to 0.55 lbs/mBtu heat release potential permanently.
		4/4/83	3/23/84	49 FR 11092	59	Stanley Woolen Co., Uxbridge, to burn 2.2% until 9/23/86.
		10/31/83	3/23/84	49 FR 11091	61	Reed and Barton Silversmiths, Taunton, to burn 2.2% until 9/23/86.
		11/16/83	7/30/84	49 FR 30306	62	ATF Davidson Company, Northbridge, to burn 2.2% permanently.
		2/2/84	6/15/84	49 FR 24723	63	American Biltrite Corporation, Chelsea, to burn 1.0% until 12/15/86.
		7/11/84	9/25/84	49 FR 37591	67	James River Corporation, Hyde Park Mill, Boston to burn 2.2% until 3/25/87.
		2/8/85, 10/23/85	4/1/86	51 FR 11021	68	Phillips Academy, Andover, MA to burn 2.2% until September 1, 1988.
	Interim sulfur-in-fuel limitations for fossil fuel utilities pending conversion to an alternative fuel or implementation of permanent energy conservation measures.	2/19/86	8/12/86	51 FR 28814	70	Mary Ellen McCormick and Malverick Family Development facilities in the Boston Housing Authority, Boston to burn 2.2% until February 12, 1989.
		5/12/86	11/25/86	51 FR 42565	71	Mission Hill Extension Family Development facility, in the Boston Housing Authority, Boston, MA to burn 2.2% until May 25, 1989.
310 CMR 7.20	U Motor Vehicle Inspection and Maintenance Emission Analyzer Approval Process and Inspection Requirements and Procedures.	6/7/91	6/30/93	58 FR 34911	58	Approval of 310 CMR 7.20(10)(c)2. to correct a typographical error.
310 CMR 7.24(5)(b)2.	Revision to gasoline volatility testing regulation	10/16/89	4/19/90	55 FR 14832	83	
310 CMR 7.24	U Organic Material Storage and Distribution	6/7/91, 11/13/92, 2/17/93	6/30/93	58 FR 34911	58	Replacement of 310 CMR 7.24, 7.24(1), 7.24(2), 7.24(3), and 7.24(4).
310 CMR 7.24(6)	''Dispensing of Motor Vehicle Fuel'' (Stage II)	05/17/90, 06/07/91	12/14/92	57 FR 58996	97	
310 CMR 7.24(6)	Dispensing of motor vehicle fuel	2/17/93	9/15/93	58 FR 48318	98	Previous version of rule approved as strengthening the Massachusetts SIP. Revised rule being approved as meeting the Clean Air Act requirements.
310 CMR 7.25	Best available controls for consumer and commercial products.	11/18/94	12/19/95	60 FR 65242	108	Includes architectural & industrial maintenance coatings.
310 CMR 7.30	Massport/Logan Airport Parking Freeze	8/04/89, 12/6/89, 3/23/90	3/16/93	58 FR 14157	94	Applies to the parking of motor vehicles on Massport property.
310 CMR 7.31	City of Boston/East Boston Parking Freeze	8/04/89, 12/6/89, 3/23/90	3/16/93	58 FR 14157	94	Applies to the parking of motor vehicles within the area of East Boston.

TABLE 52.1167—EPA-APPROVED RULES AND REGULATIONS—Continued

[See NOTES at end of Table]

State citation	Title/subject	Date submitted by State	Date approved by EPA	Federal Register citation	52.1120(c)	Comments/unapproved sections
310 CMR 7.36	Transit system improvements regulations	12/9/91	10/4/94	59 FR 50498	101	Transit system improvement regulation for Boston metropolitan area.
310 CMR 7.37	High occupancy vehicle lanes regulation	12/9/91	10/4/94	59 FR 50498	101	High occupancy vehicle lanes regulation for Boston metropolitan area.
310 CMR 7.38	Tunnel vent certification regulation	1/30/91	10/8/92	57 FR 46312	96	Tunnel ventilation certification regulation for Boston metropolitan area.
310 CMR 7.40	Low emission vehicle	11/15/93 05/11/94	2/1/95	60 FR 6030	103	Substitute for CFFP.
310 CMR 7.50	Variances, regulations for control of air pollution in the six MA APCDs.	9/14/74	10/8/76	41 FR 44395	7	
		9/14/74	2/4/77	42 FR 6812	7	Correction.
310 CMR 7.51	Hearings relative to orders and approvals	8/28/72	10/28/72	37 FR 23085	4	
310 CMR 7.52	Enforcement provisions	8/28/72	10/28/72	37 FR 23085	4	
310 CMR 8	Regulations for the prevention and/or abatement of air pollution episode and air pollution incident emergencies.	2/22/72	10/28/72	37 FR 23085	1	
		12/30/76	9/2/77	42 FR 44235	12	Changes significant harm and alert levels.

NOTES:
1. This table lists regulations adopted as of 1972. It does not depict regulatory requirements which may have been part of the Federal SIP before this date.
2. The regulations are effective statewide unless stated otherwise in comments or title section.

[49 FR 49454, Dec. 20, 1984]

EDITORIAL NOTE: For FEDERAL REGISTER citations affecting §52.1167, see the List of CFR Sections Affected in the Finding Aids section of this volume.

§ 52.1168 Certification of no sources.

The Commonwealth of Massachusetts has certified to the satisfaction of EPA that no sources are located in the Commonwealth which are covered by the following Control Techniques Guidelines:

(a) Large Petroleum Dry Cleaners.

(b) Natural Gas/Gasoline Processing Plants.

(c) Air Oxidation Processes/SOCMI.

(d) Polypropylene/Polyethylene Manufacturing.

[52 FR 32792, Aug. 31, 1987]

§ 52.1168a Part D—Disapproval of Rules and Regulations.

On December 30, 1985, the Massachusetts Department of Environmental Quality Engineering (DEQE) submitted a revision to the Massachusetts State Implementation Plan (SIP) for the automobile surface coating regulation. This revision requested an extension of the final compliance dates to implement reasonably available control technology (RACT) on topcoat and final repair applications. As a result of EPA's disapproval of this revision, the existing compliance date of December 31, 1985 specified in the automobile surface coating regulation contained in the Massachusetts SIP will remain in effect (Massachusetts Regulation 310 CMR 7.18(7) as approved by EPA and codified at 40 CFR 52.1120(c)(30) and (53)).

[53 FR 36014, Sept. 16, 1988]

§ 52.1169 Stack height review.

The Commonwealth of Massachusetts has declared to the satisfaction of EPA that no existing emission limitations have been affected by stack height credits greater than good engineering practice or any other prohibited dispersion technique as defined in EPA's stack height regulations, as revised on July 8, 1985. This declaration was submitted to EPA on April 8, 1986. The commonwealth has further declared in a letter from Bruce K. Maillet, dated June 24, 1986, that, ''[A]s part of our new source review activities under the Massachusetts SIP and our delegated PSD authority, the Department of Environmental Quality Engineering will follow EPA's stack height regulations, as revised in the FEDERAL REGISTER on July 8, 1985 (50 FR 27892).'' Thus, the Commonwealth has satisfactorily demonstrated that its regulations meet 40 CFR 51.118 and 51.164.

[52 FR 49407, Dec. 31, 1987]

Subpart X—Michigan

§ 52.1170 Identification of plan.

(a) Title of plan: ''Implementation Plan for the Control of Suspended Particulates Sulfur Oxides, Carbon Monoxide, Hydrocarbons, Nitrogen Oxides, and Photochemical Oxidants in the State of Michigan.''

(b) The plan was officially submitted on February 3, 1972.

(c) The plan revisions listed below were submitted on the dates specified.

(1) Re-evaluation of control strategies for Berrien and Ingham Counties were submitted on March 3, 1972, by the State Air Pollution Office.

(2) Amendments to the Michigan air pollution rules for the control of SO_2 emissions (Part 3) and the prevention of air pollution episodes (Part 6) submitted by the Governor on March 30, 1972.

(3) An amendment to the Grand Rapids air pollution ordinance (section 9.35 and section 9.36) was submitted on May 4, 1972, by the Grand Rapids Department of Environmental Protection.

(4) Reasons and justifications concerning general requirements of control strategy for nitrogen dioxide, compliance schedules, and review of new sources and modifications submitted on July 12, 1972, by the Governor.

(5) A letter from the State Department of Public Health submitted on July 24, 1972, described how emissions data would be made available to the public.

(6) Compliance schedules were submitted by the State of Michigan, Department of Natural Resources on February 16, 1973.

(7) Compliance schedules were submitted by the State of Michigan, Department of Natural Resources on May 4, 1973.

(8) Compliance schedules were submitted by the State of Michigan, Department of Natural Resources on September 19, 1973.

(9) Compliance schedules were submitted by the State of Michigan, Department of Natural Resources on October 23, 1973.

(10) Compliance schedules were submitted by the State of Michigan, Department of Natural Resources on December 13, 1973.

(11) Air Quality Maintenance Area identifications were submitted on June 27, 1974, by the State of Michigan Department of Natural Resources.

(12) Air Quality Maintenance Area identifications were submitted on October 18, 1974, by the State of Michigan Department of Natural Resources.

(13) Provisions to disapprove an installation permit if the applicant source would interfere with the attainment or maintenance of national air quality standards were submitted by the Governor on January 25, 1974.

(14) Order extending the final compliance dates for meeting the sulfur dioxide emission limitation was submitted by the Michigan Department of Natural Resources for the Karn, Weadock and Cobb Plant Units of the Consumers Power Co.

(15) Order extending compliance date for meeting the sulfur dioxide emission limitation was submitted by the State of Michigan Department of Natural Resources for the Detroit Edison Company, Monroe County Plant on December 12, 1977.

(16) On April 25, 1979, the State submitted its nonattainment area plan for areas designated nonattainment as of March 3, 1978 and as revised on October 5, 1978. This submittal contained Michigan's Part D attainment plans for particulate matter, carbon monoxide, sulfur dioxide, transportation and new source review, plus a copy of Michigan's existing and proposed regulations. USEPA is not taking action at this time to include in the federally approved SIP certain portions of the submittal: Provisions in R 336.1310 concerning open burning; 336.1331, insofar as it may pertain to process sources in the iron and steel category and site specific revisions; 1349, 1350, 1351, 1352, 1353, 1354, 1355, 1356 and 1357 as they pertain to specific iron and steel source operations; Part 5, Extension of Sulfur Dioxide Compliance Date for Power Plants Past January 1, 1980; Part 7, Emission Limitations and Prohibitions—New Sources of Volatile Organic Compound Emissions; R336.1701–1710 controlling minor sources of volatile organic compounds; Part 11, Continuous Emission Monitoring; Part 13, Air Pollution Episodes; Part 16, Organization and Procedures; and Part 17, Hearings.

(17) On October 12, 1979, the State submitted comments and commitments in response to USEPA's notice of proposed rulemaking.

(18) On January 9, 1980, the State submitted a copy of the finally adopted rules of the Commission. These rules became fully effective on January 18, 1980. These finally adopted rules are identical to the rules submitted on April 25, 1979, as part of Michigan's Part D nonattainment area plan except for a modification in the numbering system. Paragraph (c)(16) of this subpart identifies those rules on which USEPA has not taken action.

(19) On February 6, 1980, the State submitted the visible emission test method for stationary sources referenced in Rule 336.1303 as being on file with the Michigan Air Pollution Control Commission. On March 7, 1980, the State submitted clarifications to the visible emissions test method.

(20) On March 31, 1980, the State submitted revisions to the conditional approval schedules for total suspended particulates.

(21) On July 25, 1979, the State submitted the official ozone attainment plan as part of the State Implementation Plan.

(22) On October 26, 1979, the State submitted comments and revisions to the transportation plans and vehicle inspection/maintenance portions of the State Implementation Plan for ozone in response to USEPA's notice of proposed rulemaking (45 FR 47350).

(23) On November 8, 1979, the State submitted revisions to the ozone attainment plan.

(24) On December 26, 1979, the State submitted comments and additional information from the lead local agencies on the transportation control plans for the Flint, Lansing, Grand Rapids and Detroit urban areas.

(25) On May 12, 1980, the State submitted corrections and comments in

response to USEPA's notice of proposed rulemaking (45 FR 25087).

(26) On March 20, 1980, the State submitted commitments and additional revisions to the Inspection/Maintenance program for the Detroit urban area.

(27) On February 23, 1979, compliance schedules were submitted by the State of Michigan, Department of Natural Resources to USEPA for the Detroit Edison, St. Clair Power Plant. Additional material concerning the Final Order issued to the Detroit Edison, St. Clair Power Plant was submitted on June 17, 1979 and August 14, 1979.

(28) On August 22, 1979, the State of Michigan submitted to USEPA an Administrative Order, for the Lansing Board of Water and Light (Order No. 4–1979, adopted May 23, 1979). In letters dated February 13, 1980 and April 1, 1980, the State of Michigan withdrew certain paragraphs (sections A, B, C1, D, E, F, and G) of the Order from consideration by USEPA.

(29) Compliance schedules were submitted by the State of Michigan, Department of Natural Resources to USEPA on October 26, 1979, for the Dundee Cement Company, Monroe County (Michigan Final Order, APC No. 08–1979, adopted October 17, 1979).

(30) On July 26, 1979, the State of Michigan submitted to USEPA a revision to Rule 336.49 for the Consumers Power Company's J. H. Campbell Plant. The revision is a Final Order (No. 05–1979) extending the compliance date until January 1, 1985 for the Campbell Plant to meet the sulfur dioxide emission limitations in Rule 336.49. On February 14, 1980, the State of Michigan submitted to USEPA an amendment to Order No. 05–1979.

(31) Compliance schedules were submitted by the State of Michigan, Department of Natural Resources to USEPA on November 13, 1979, for the S. D. Warren Company, Muskegon County (Michigan Final Order, No. 09–1979, adopted October 31, 1979).

(32) On December 19, 1979, the State of Michigan submitted a revision to provide for modification of the existing air quality surveillance network.

(33) On December 10, 1979, the State of Michigan submitted to USEPA a Final Order (APC No. 6–1979) issued by the Michigan Air Pollution Control Commission to the Consumers Power Company B.C. Cobb Plant. The Order requires the source to utilize 2.5% sulfur on an annual basis until January 1, 1985 when the company must meet the sulfur dioxide (SO_2) emission limitation in Michigan Rule 336.1401.

(34) On January 8, 1980, the State of Michigan submitted to USEPA a Final Order (APC No. 14–1979) requested of the Michigan Air Pollution Control Commission (MAPCC) by the Union Camp Corporation in Monroe County, Michigan. The Order permitted the Union Camp Corporation to burn 2.7% sulfur fuel on an annual average and 4.0% sulfur fuel on a daily average between January 1, 1980 and July 1, 1980. Beginning July 1, 1980 until July 1, 1982 the Company is permitted to burn 2.5% sulfur fuel on an annual average and 4.0% sulfur fuel daily average. Beginning July 1, 1982 until January 1, 1985, the Company is allowed to burn 2.2% sulfur fuel annual average and 3.5% sulfur fuel daily average. After January 1, 1985; the Company has agreed to comply with the SO_2 emission limitations of 1.5% sulfur fuel required in Michigan Rule 336.1401.

(35) On August 4, 1980 and August 8, 1980, the State of Michigan submitted to EPA additional information on the transportation control plan for the Niles, Michigan urbanized area.

(36) On January 10, 1980, the State of Michigan submitted to USEPA a Final Order (APC No. 16–1979) issued by the Michigan Air Pollution Control Commission to the Northern Michigan Electric Cooperative Advance Steam Plant. The Order allows the source to continue burning 2.0% sulfur coal (maximum daily average) until January 1, 1985 when the Company must meet the sulfur dioxide (S02) emission limitations in Michigan Rule 336.1401.

(37) On November 26, 1980, the State submitted a schedule to correct plan deficiencies cited by USEPA in its September 9, 1980 notice of proposed rulemaking on a portion of Michigan's Part D TSP control strategy pertaining to iron and steel sources. On April 1, 1981, the State submitted a revised schedule. USEPA has not taken action on the schedule submitted by the State.

(38) On April 10, 1981 the Governor of Michigan committed to annually administer and submit the questionnaire developed for the purposes of section 128.

(39) On July 28, 1980, the State of Michigan submitted to EPA, as revisions to the Michigan SIP, amendments to Rules 283 and 610 of the Michigan Air Pollution Control Commission.

(40) Revised compliance schedules were submitted by the State of Michigan, Department of Natural Resources (MDNR) to EPA on January 14, 1981, for the Dundee Cement Company, Monroe County (Michigan Final Order, APC No. 16—1980, adopted November 19, 1980). The revised Order provides an earlier final compliance date of December 31, 1980 for reducing the particulate matter emissions to 0.20 pounds per 1,000 pounds of exhaust gases and December 31, 1981 for visible emission reductions from the Company's cement kilns.

(41) On April 25, 1979, the State submitted materials which satisfy the intergovernmental consultation process.

(42) On July 28, 1980, the State submitted an amendment to Michigan Air Pollution Control Commission Rule 221 which exempts minor sources of particulate matter and sulfur dioxide from the offset requirements.

(43) On August 25, 1981, the State of Michigan, Department of Natural Resources (MDNR), submitted to EPA Consent Order No. 16–1981 for the Marathon Oil Company in Muskegon County. Consent Order No. 16–1981 satisfies USEPA's conditional approval of R336.1603 by providing detailed compliance schedules containing the increments of progress required by 40 CFR 51.15.

(44) On September 1, 1981, the State of Michigan, Department of Natural Resources (MDNR) submitted to USEPA a revision to its R336.1220 requiring offsets in ozone nonattainment areas to exempt the same compounds listed in EPA's FEDERAL REGISTER of July 22, 1980 (45 FR 48941). The revised R336.1220 also allows offsets of emissions for new sources in any of the seven counties in the southeastern Michigan ozone nonattainment area to be obtained from any of those counties, not just the county in which the new source is locating (Wayne, Oakland, Macomb, St. Clair, Washtenaw, Livingston, and Monroe).

(45) On May 24, 1980, the State of Michigan, Department of Natural Resources (MDNR) submitted Consent Order APC No. 10–1979 for the Buick Motor Division Complex (BMDC) of the Buick Motors Division, General Motors Corporation. The BMDC is located in the City of Flint, Genesee County, a primary nonattainment area. On December 2, 1980, supplementary information was submitted by MDNR. The Consent Order contains enforceable emission limitations and control measures for the attainment of the primary TSP standards in Genesee County by December 31, 1982.

(46) On July 17, 1980, the State of Michigan, Department of Natural Resources (MDNR) submitted Consent Order APC No. 01–1980 for the Grey Iron Casting Plant and the Nodular Iron Casting Plant, of the Chevrolet Motor Division, General Motors Corporation. The two plants are located in Saginaw County, a primary nonattainment area. On September 5, 1980 and February 6, 1981, supplementary information was submitted by MDNR. The Consent Order contains enforceable emission limitations and control measures for the attainment of the primary TSP standards in Saginaw County by December 31, 1982.

(47) On March 4, 1981, the State of Michigan, Department of Natural Resources (MDNR) submitted Consent Order APC No. 12–1980 for the New Haven Foundry located in Macomb County, a secondary nonattainment area. The Consent Order contains enforceable emission reductions to achieve the secondary TSP standards by June 30, 1985.

(48) On May 1, 1981, the State of Michigan, through the Department of Natural Resources, submitted Consent Order 07–1981 for the Detroit Edison Company, Boulevard Heating Plant located in the City of Detroit, Wayne County. Under Michigan Rule 336.1331(1)(a), the plant was restricted to a particulate emission limit of 0.45 pounds of particulate per 1000 pounds flue gas or an equivalent of 410 tons per

year. The Consent Order, pursuant to Michigan Rule 333.1331(1)(d), establishes a new limitation for the Boulevard Plant of 0.65 pounds per 1000 pounds of flue gas with a daily limit of 0.9 tons per day and 10 tons per year.

Pursuant to the provisions of 5 U.S.C. 605(b), the Administrator certified on January 27, 1981 (46 FR 8709) that the attached rule will not have a significant economic impact on a substantial number of small entities.

(49) On March 7, 1980 and April 21, 1981 the State of Michigan submitted particulate studies for the Detroit area. These studies satisfy EPA's conditional approval and the State's commitment.

(50) On October 22, 1981, the State of Michigan submitted as a SIP revision Consent Order No. 17–1981, between Conoco, Inc., and the Michigan Air Pollution Control Commission. The Consent Order establishes a compliance schedule for Conoco, Inc. to achieve the Volatile Organic Compounds (VOC) limitations in R336.1609 by December 31, 1982.

(51) On December 27, 1979, the State of Michigan, Department of Natural Resources (MDNR), submitted to EPA a revision to the State Implementation Plan (SIP) for Lead. On February 9, 1981, the State of Michigan submitted a letter clarifying provisions of its Lead SIP. The SIP provides for the implementation of measures for controlling lead emissions for the attainment and maintenance of the national ambient air quality standards for lead in Michigan by October 31, 1982.

(52) On June 26, 1981, the State of Michigan, Department of Natural Resources, submitted to EPA Consent Order No. 12–1981 for controlling particulate emissions from the liquid waste incinerator in Building 830 at the Dow Chemical Company's Midland plant. The Consent Order provides a schedule which establishes a final particulate emissions compliance date of October 1, 1982.

(53) On August 24, 1981, the State of Michigan, Department of Natural Resources, submitted to EPA Consent Order APC No. 19–1981 for controlling particulate emissions from Dow's West Side and South Side powerplants. On October 16, 1981, the State of Michigan submitted a letter to EPA clarifying specific sections intended for EPA's rulemaking action. All particulate emission sources at Dow must comply with various parts of Michigan's SIP by December 31, 1985. The Consent Order does not interfere with the attainment of the primary particulate NAAQS standard by December 31, 1982 or the secondary particulate NAAQS by October 1, 1984.

(54) On December 16, 1981, the State of Michigan submitted to EPA Consent Order APC No. 21–1981 for the Monitor Sugar Company. Consent Order APC No. 21–1981 provides for additional controls on its coal-fired boilers, 1, 2, 3, and 4 and establishes a final compliance date of October 15, 1982 for attaining the primary National Ambient Air Quality Standards.

(55) On January 7, 1982, the State of Michigan submitted to EPA Consent Order APC No. 23–1981 for the Traverse City Board of Light and Power. Consent Order APC No. 23–1981 limits the company's operation of its No. 1 and No. 2 coal-fired boilers after December 31, 1982; provides for additional controls on its No. 4 coal-fired boiler; and establishes a final compliance date of December 31, 1982.

(56) On September 2, 1981, the State of Michigan submitted a revision to the ozone plan consisting of RACT requirements for the control of volatile organic compound emissions from stationary industrial sources (Group II) referenced in Rules R336.1101–3, 5–9, 14–16, 18–21, 23; R336.1601, 3–4, 10, 19–27; and R336.2005.

(57) On March 3, 1982, the State of Michigan submitted a modification to its schedule for submitting by December 31, 1982 regulations developed to correct the State's deficiencies in its Part D State Implementation Plan for the attainment of the total suspended particulate air quality standards in its nonattainment areas containing iron and steel sources.

(58) On December 16, 1981, the State of Michigan submitted as a SIP revision consent order APC No. 18–1981 between General Motors Warehousing and Distribution Division and the Michigan Air Pollution Control Commission. On March 16, 1982, Michigan submitted an amendment to consent

order APC No. 18–1981. The Consent Order provides a one year extension from October 15, 1982 until October 15, 1983 for the Company's No. 1 and No. 2 boilers and establishes a compliance date of October 15, 1981, for boilers 3 and 4. The Consent Order contains a schedule for compliance which specifies emission limits of 0.45 pounds of particulate per 1,000 pounds of gas as required in Michigan's rule 336.1331(c) Table 31.

(59) [Reserved]

(60) On April 5, 1982, the State of Michigan submitted Consent Order APC No. 02–1980 along with alterations to Section 5(D) of the Consent Order for the Hayes-Albion foundry in Calhoun County. The Consent Order contains control measures beyond the present requirements of Michigan's R336.1301 and R336.1331 for Total Suspended Particulate (TSP) emissions and evaluation methods for determining significant particulate emission sources from the foundry. On June 18, 1982, the State of Michigan also submitted a Fugitive Dust Control Plan and a Malfunction Abatement Plan for the Hayes-Albion foundry. On September 21, 1982, the State of Michigan formally submitted Permits 314–79 and 375–79 for the American Colloid Plant.

(61) On March 6, 1981, the State of Michigan submitted as a SIP revision general rules for fugitive dust control. These rules were approved by the Michigan Air Pollution Control Commission on January 20, 1981, and became effective at the State level on February 17, 1981. On January 25, 1982, May 3, 1982, and August 24, 1982, Michigan submitted additional information and commitments. The submittal of March 6, 1981, along with the additional information and commitments satisfies the State's commitment to submit industrial fugitive dust regulations that represent reasonably available control techniques for industrial fugitive dust sources.

(62) On July 28, 1982, the State of Michigan submitted Consent Order No. 06–1981 for the Clark Oil and Refining Corporation for volatile organic compound (VOC) emissions. This revision is a detailed compliance schedule containing increments of progress with a final compliance date of December 31, 1982 and an emission limitation of 0.7 pound of organic vapor per 1000 gallons of organic compound load.

(63) On September 8, 1982, the State of Michigan submitted as a SIP revision Consent Order No. 03–1982, between the Hydra-Matic Division, General Motors Corporation and the Michigan Air Pollution Control Commission. The Consent Order establishes a compliance schedule containing increments of progress dates and a final date of November 1, 1982 for Boiler No. 5 to comply with Michigan's R336.331.

(64) On September 21, 1982, the State of Michigan submitted as a SIP revision Consent Order No. 13–1982, between the Diamond Crystal Salt and the Michigan Air Pollution Control Commission, the Consent Order establishes a compliance schedule containing increments of progress dates and a final date of December 18, 1982 for Boiler No. 5 to comply with Michigan's R336.331.

(65) [Reserved]

(66) On September 8, 1982, the State of Michigan submitted as a State Implementation Plan (SIP) revision consent order No. 08–1982, between the General Motors, Buick Motor Division and the Michigan Air Pollution Control Commission. The Consent Order establishes a Volatile Organic Compound (VOC) emissions compliance schedule as required under Michigan's Rule 336.1603 and 336.1610, and extends the final compliance date for surface coating operations until December 31, 1987. On November 29, 1982, and March 10, 1983, the State submitted additional information.

(67) On September 8, 1982, the State of Michigan submitted Consent Order No. 09–1982, between the General Motors, Fisher Body Division and the Michigan Air Pollution Control Commission as a State Implementation Plan (SIP) revision. The Consent Order establishes a Volatile Organic Compound (VOC) emission compliance schedule as required under Michigan's Rule 336.1603 and 336.1610, and extends the compliance date for surface coating operations until December 31, 1987. On November 29, 1982, and March 10, 1983, the State submitted additional information.

(68) On September 8, 1982, the State of Michigan submitted as a State Implementation Plan (SIP) revision Consent Order No. 10–1982, between Chevrolet Truck Assembly and the Michigan Air Pollution Control Commission. The Consent Order establishes a Volatile Organic Compound (VOC) emission compliance schedule as required under Michigan's Rule 336.1603 and 336.1610, and extends the compliance date for surface coating operations until December 31, 1987. On November 29, 1982, and March 10, 1983, the State submitted additional information.

(69) On September 8, 1982, the State of Michigan submitted as a State Implementation Plan (SIP) revision Consent Order No. 11–1982, between the General Motors Fisher Body Division, Fleetwood Plant and the Michigan Air Pollution Control Commission. On March 10, 1983, the State submitted additional information for this SIP revision. The Consent Order establishes a Volatile Organic Compound (VOC) emissions compliance schedule as required under Michigan's Rules 336.1603 and 336.1610, and extends the final compliance date for surface coating operations until December 31, 1987.

(70) On September 8, 1982, the State of Michigan submitted as a State Implementation Plan (SIP) revision Consent Order No. 12–1982, between the General Motors, Cadillac Motors Car Division and the Michigan Air Pollution Control Commission. On March 10, 1983, the State submitted additional information for this SIP revision. The Consent Order establishes a Volatile Organic Compound (VOC) emission compliance schedule as required under Michigan's Rule 336.1603 and R336.1610, and extends the compliance date for surface coating operations until December 31, 1987.

(71) On September 1, 1982, the State of Michigan submitted a request to reduce the size of the ozone demonstration area for Southeast Michigan from the seven-county area of Wayne, Oakland, Macomb, Livingston, Monroe, St. Clair and Washtenaw to a three-county area consisting of Wayne, Oakland, and Macomb Counties.

(72) On November 18, 1982, the State of Michigan submitted Consent Order APC No. 06–1980, along with alterations for the General Motors Corporation (GMC) Central Foundry Division, Saginaw Malleable Iron Plant in the City of Saginaw, County of Saginaw as a revision to the Michigan SIP. Consent Order No. 06–1980, as amended, reflects an interim and final particulate emission limit more stringent than Michigan's rule 336.1331; extends the final date of compliance with Michigan's Rule 336.1301 for opacity on the oil quench facilities from December 31, 1982, to December 15, 1983, which is as expeditiously as practicable and before the July 31, 1985, attainment date for the secondary TSP NAAQS in Michigan.

(73) On June 30, 1983, the State of Michigan submitted as a State Implementation Plan (SIP) revision. Consent Order No. 4–1983 between the General Motors Corporation's Oldsmobile Division and the Michigan Air Pollution Control Commission. The Consent Order establishes a Volatile Organic Compound (VOC) emissions compliance schedule as required under Michigan's Rule 336.1603 and 336.1610, and extends the final compliance dates for prime, primer-surfacer, topcoat, and final repair operations until December 31, 1987.

(74) On June 30, 1983, the State of Michigan submitted as a State Implementation Plan (SIP) revision. Consent Order No. 5–1983, between the General Motors Corporation's Assembly Division and the Michigan Air Pollution Control Commission. The Consent Order established a Volatile Organic Compound (VOC) emission compliance schedule as required under Michigan's Rule 336.1603 and R336.1610, and provides interim compliance limits to be achieved by December 31, 1984, and extends the final compliance dates for topcoating and final repair coating operations until December 31, 1987.

(75) On October 4, 1983, the State of Michigan submitted: (1) A revised Consent Order APC No. 12–1979 between CWC Castings Division of Textron and the Michigan Air Pollution Control Commission and (2) Article 14, Section J of the Muskegon County APC Rules. Consent Order APC No. 12–1979 requires reductions of point source emissions and fugitive emissions and extends the

installation schedule of specified control devices to December 31, 1984. Article 14, Section J, provides a ban on open residential and leaf burning in Muskegon County. EPA approves the additional control measures contained in Consent Order APC No. 12–1979 and the open burning ban. EPA takes no action on the overall approval of Michigan's Part D secondary nonattainment area for Muskegon County.

(76) On August 24, 1983, the State of Michigan submitted a State Implementation Plan (SIP) revision request for an extension of the compliance date for Boiler No. 2 for the General Motors Corporation Warehousing and Distribution Division, in Swartz Creek County. Consent Order No. 18–1981 extends the compliance date until October 15, 1985 for GMC to install mechanical collectors on Boiler No. 2.

(77) On March 8, 1984, the State of Michigan submitted a report which demonstrated that Rule 336.1606 contains emission limits equivalent to Reasonable Available Control Technology (RACT) for Wayne, Oakland and Macomb Counties. Therefore, USEPA remove its conditional approval of Rule 336.1606 and fully approves the State's rule.

(78) On September 6, 1984, the State of Michigan submitted a revision to the Michigan State Implementation Plan for the General Motors Corporation Buick Motor Division in the form of an Alteration of Stipulation for Entry of Consent Order and Final Order, No. 8–1982. The original Consent Order No. 8–1982 was federally approved on July 6, 1983. This alteration revises Consent Order No. 8–1982, in that it accelerates the final compliance dates for prime and prime-surfacer operations and extends an interim compliance date for topcoat operations.

(i) Incorporation by reference.

(A) State of Michigan, Air Pollution Control Commission, Alteration of Stipulation for Entry Consent Order and Final Order SIP No. 8–1983, which was approved by the Air Pollution Control Commission on April 2, 1984.

(B) Letter of September 6, 1984, from the State of Michigan, Department of Natural Resources, to EPA.

(79) On December 2, 1983, USEPA proposed to withdraw its approval of Michigan's fugitive dust regulations. On April 25, 1985, the State of Michigan submitted revised Rule 336.1371, existing Rule 336.1372, and new Rule 336.1373. However, they did not meet the requirements of Part D of section 172(b); and USEPA, therefore, withdrew its approval of these submittals, disapproved these submittals, and instituted new source restrictions for major sources in the Michigan primary Total Suspended Particulate (TSP) nonattainment areas on August 20, 1985. USEPA incorporates revised Rule 336.1371 and newly submitted Rule 336.1373 into the Michigan State Implementation Plan because they provide a framework for the development of fugitive dust control programs at the State level in Michigan. USEPA retains Rule 336.1372, which is already incorporated into the Michigan SIP, insofar as it applies to sources in TSP attainment areas. This paragraph supercedes paragraph (C)(61) of this section.

(i) Incorporation by reference.

(A) Michigan Department of Natural Resources Rules 336.1371 and 336.1373 (Fugitive Dust Regulations), as adopted on April 23, 1985.

(80) On July 27, 1983, the State of Michigan submitted Consent Order No. 08–1983 for the General Motors Corporation Central Foundry Division's Saginaw Malleable Iron Plant, as a revision to the Michigan State Implementation Plan for Total Suspended Particulates. Consent Order No. 08–1983 amends control strategy provisions of federally approved (November 18, 1982 and August 15, 1983) Consent Order No. 06–1980 and its alteration.

(i) Incorporation by reference.

(A) Stipulation for Entry of Consent Order and Final Order No. 08–1983 for the General Motors Corporation Central Foundry Division's Saginaw Malleable Iron Plant amending Control Strategy Provisions issued June 9, 1983.

(81) On October 1, 1984, the State of Michigan submitted the Stipulation for Entry of Consent Order and Final Order, SIP No. 12–1984, between the Consumer Power Company's J.H. Campbell and the Michigan Air Pollution Control Commission as a revision to the Michigan SO_2 SIP. Consent Order No. 12–1984 provides a 3-year compliance date extension (January 1,

1985, to December 31, 1987) for the J.H. Campbell Units 1 and 2 to emit SO_2 at an allowable rate on a daily basis of 4.88 lbs/MMBTU in 1985, 4.78 lbs/MMBTU in 1986, and 4.68 lbs/MMBTU in 1987.

(i) Incorporation by reference.

(A) October 1, 1984, Stipulation for Entry of Consent Order and Final Order, SIP No. 12–1984, establishing interim daily average SO_2 emission limitations and quarterly average limits on percent sulfur is fuel fired.

(82) The State of Michigan submitted negative declarations for several volatile organic compound source categories, as follows:

October 10, 1983—Large petroleum dry cleaners;

May 17, 1985—High-density polyethylene, polypropylene, and polystyrene resin manufacturers;

June 12, 1985—Synthetic organic chemical manufacturing industry sources (SOCMI) oxidation.

(i) Incorporation by reference.

(A) Letters dated October 10, 1983, May 17, 1985, and June 12, 1985, from Robert P. Miller, Chief, Air Quality Division, Michigan Department of Natural Resources. The letter dated June 12, 1985, includes pages 2–119 and 2–120 from the revised 1982 Air Quality Implementation Plan for Ozone and Carbon Monoxide in Southeast Michigan.

(83) On September 16, 1985, the State of Michigan submitted a SIP revision requesting alternate opacity limits for the Packaging Corporation of America (PCA) bark boiler. The request is in the form of a Stipulation for Entry of Consent Order and Final Order (No. 23–1984). The Consent Order contains an extended schedule for the PCA's bark boiler to comply with Michigan's Rule 336.1301.

(i) Incorporation by reference. (A) Stipulation for Entry of Consent Order and Final Order No. 23–1984 for the Packaging Corporation of America, approved on July 8, 1985.

(84) On April 29, 1986, the State of Michigan submitted a revision to the Michigan State Implementation Plan (SIP) for total suspended particulates (TSP). The revision, in the form of Air Pollution Control Act (APCA) No. 65, revises the State's 1965 APCA No. 348 contained in the TSP portion of the Michigan SIP with respect to: car ferries having the capacity to carry more than 110 motor vehicles; and coal-fired trains used in connection with tourism.

(i) Incorporation by reference. (A) Act No. 65 of the Public Acts of 1986, as approved by the Governor of Michigan on March 30, 1986.

(85) On April 25, 1979, the State of Michigan submitted as revisions to the Air Quality Implementation Plan, Michigan Department of Natural Resources Air Pollution Control Commission General Rules for Open Burning; Continuous Emission Monitoring; Air Pollution Episodes; Organization, Operation and Procedures; and Hearings.

(i) Incorporation by reference.

(A) R 336.1310, Open Burning, effective January 18, 1980.

(B) R 336.2101–3, R 336.2150–5, R 336.336–2159, R 336.2170, R336.2175–6, R 336.2189–90, and R 336.2199; Continuous Emission Monitoring, effective January 18, 1980.

(C) R 336.2301–8, Air Pollution Episodes, effective January 18, 1980.

(D) R 336.2601–8, Organization, Operating, and Procedures, effective January 18, 1980.

(E) R 336.2701–6, Hearings, effective January 18, 1980.

(86) On May 25, 1988, the State of Michigan submitted an SIP revision in the form of an addendum to the State's Rule 336.1122, effective at the State level on May 20, 1988. The amendment will allow coating companies to exclude methyl chloroform from the VOC emission calculation when it is not technically or economically reasonable. This exemption applies only to the surface coating operations that are subject to Part 6 (Emission Limitations and Prohibitions—Existing Sources of VOC Emissions) or Part 7 (Emission Limitations and Prohibitions—New Sources of VOC Emissions) of the State's regulations.

(i) Incorporation by reference.

(A) R336.1122, Methyl Chloroform; effective at the State level on May 20, 1988.

(87)–(89) [Reserved]

(90) On December 17, 1987, the State of Michigan submitted to USEPA a revision to the Michigan State Implementation Plan for the Continental Fiber Drum, Inc., which limits volatile organic compound emissions from the

surface coating operations at the facility.

(i) Incorporation by reference.

(A) State of Michigan, Air Pollution Control Commission, Stipulation for Entry of Consent Order and Final Order No. 14–1987, which was adopted by the State on December 9, 1987.

(B) Letter of December 17, 1987, from the State of Michigan, Department of Natural Resources to USEPA.

(91) On May 17, 1985, the State submitted revised rules for the control of particulate matter from iron and steel sources and from other sources in Michigan. These rules were submitted to fulfill conditions of USEPA's May 22, 1981, approval (46 FR 27923 of the State's part D total suspended particulates (TSP) State Implementation Plan (SIP). USEPA is approving these revised rules in the Michigan submittal except for the following provisions: The quench tower limit in rule 336.1331, Table 31, Section C.8, because allowing water quality limits to apply only to makeup water is a relaxation; the deletion of the limit in rule 336.1331 for coke oven coal preheater equipment, because it is a relaxation, and rule 336.1355, because it provides an unlimited exemption for emissions from emergency relief valves in coke oven gas collector mains.

(i) Incorporation by reference.

(A) Revision to parts 1, 3, and 10 of Michigan's administrative rules for air pollution control (Act 348 of 1967, as amended) as adopted by the Michigan Air Pollution Control Commission on December 18, 1984. These rules became effective in Michigan on February 22, 1985.

(92) On October 10, 1986, the State of Michigan supported portions of the revised Wayne County Air Pollution Control Division Air Pollution Control Ordinance as approved by Wayne County on September 19, 1985, as a revision to the Michigan State Implementation Plan.

(i) Incorporation by reference.

(A) Chapters 1, 2, 3, 5 (except for the portions of Chapter 5, section 501, of the Wayne County Ordinance which incorporate by reference the following parts of the State rules: The quench tower limit in Rule 336.1331, Table 31, Section C.8; the deletion of the limit in Rule 336.1331 for coke oven coal preheater equipment; and Rule 336.1355), 8 (except section 802), 9, 11, 12, 13 and appendices A and D of the Wayne County Air Pollution Control Division (WCAPCD) Air Pollution Control Ordinance as approved by WCAPCD on September 19, 1985.

(93) On November 16, 1992, the Michigan Department of Natural Resources submitted Natural Resources Commission Rule 336.202 (Rule 2), Sections 5 and 14a of the 1965 Air Pollution Act 348, and the 1991 Michigan Air Pollution Reporting Forms, Reference Tables, and General Instructions as the States emission statement program. Natural Resources Commission Rule 336.202 (Rule 2) became effective November 11, 1986. Section 5 and 14a of the 1965 Air Pollution Act 348 became effective July 23, 1965.

(i) Incorporation by reference.

(A) Natural Resources Commission Rule 336.202 (Rule 2) became effective November 11, 1986. Section 5 and 14a of the 1965 Air Pollution Act 348 became effective July 23, 1965.

(94) On November 13, 1992, January 8, 1993, and November 12, 1993, the State of Michigan submitted a Small Business Stationary Source Technical and Environmental Assistance Program for incorporation in the Michigan State Implementation Plan as required by section 507 of the Clean Air Act.

(i) Incorporation by reference.

(A) Small Business Clean Air Assistance Act, Act No. 12, Public Acts of 1993, approved by the Governor on April 1, 1993, and effective upon approval.

(95) On November 15, 1993, the State of Michigan requested revision to the Michigan State Implementation Plan (SIP) to incorporate miscellaneous technical rule changes that the State had made effective April 20, 1989.

(i) Incorporation by reference.

(A) Michigan Air Pollution Control Rules: R 336.1107 (except paragraph (c)); R 336.1121, R 336.1403. R 336.1606, R 336.1607, R 336.1608, R 336.1609, R 336.1616, R 336.1626 (deleted), and R 336.1705, effective April 20, 1989.

(96) Revisions to the Michigan Regulations submitted on June 12, 1993 and November 12, 1993 by the Michigan Department of Natural Resources:

(i) Incorporation by reference.

(A) Revisions to the following provisions of the Michigan Air Pollution Control Commission General Rules filed with the Secretary of State on April 12, 1993 and effective on April 27, 1993:

(*1*) R 336.1101 Definitions; A—Revised definitions of the following terms: actual emissions, air-dried coating, air quality standard, allowable emissions and alternate opacity.

(*2*) R 336.1103 Definitions; C—Added definition of coating category. Revised definitions of the following terms: calendar day, class II hardboard paneling finish, coating line, coating of automobiles and light-duty trucks coating of fabric, coating of large appliances, coating of paper, coating of vinyl, component, component in field gas service, component in gaseous volatile organic compound service, component in heavy liquid service, component in light liquid service, component in liquid volatile organic compound service, condenser, conveyorized vapor degreaser, and creditable.

(*3*) R 336.1105 Definitions; E—Added definition of the term extreme environmental conditions. Revised definitions of the following terms: electrostatic prep coat, equivalent method and extreme performance coating.

(*4*) R 336.1116 Definitions; P—Revised definitions of the following terms: packaging rotogravure printing, printed interior panel, process unit turnaround, publication rotogravure printing and pushside. Deleted definition of the term pneumatic rubber tire manufacturing.

(*5*) R 336.1122 Definitions; V—Added definition of the term vapor collection system. Revised definitions of the following terms: very large precipitator and volatile organic compound.

(*6*) R 336.1602 General provisions for existing sources of volatile organic compound emissions (entire rule).

(*7*) R 336.1610 Existing coating lines; emission of volatile organic compounds from exiting automobile, light-duty truck, and other product and material coating lines (entire rule).

(*8*) R 336.1611 Existing cold cleaners (entire rule).

(*9*) R 336.1619 Perchloroethylene; emission from existing dry cleaning equipment (entire rule).

(*10*) R 336.1620 Emission of volatile organic compounds from existing flat wood paneling coating lines (entire rule).

(*11*) R 336.1621 Emission of volatile organic compounds from existing metallic surface coating lines (entire rule).

(*12*) R 336.1622 Emission of volatile organic compounds from existing components of petroleum refineries; refinery monitoring program (entire rule).

(*13*) R 336.1623 Storage of petroleum liquids having a true vapor pressure of more than 1.0 psia, but less than 11.0 psia, in existing external floating roof stationary vessels of more than 40,000-gallon capacity (entire rule).

(*14*) R 336.1625 Emission of volatile organic compounds from existing equipment utilized in manufacturing synthesized pharmaceutical products (entire rule).

(*15*) R 336.1627 Delivery vessels; vapor collection systems (entire rule).

(*16*) R 336.1630 Emission of volatile organic compounds from existing paint manufacturing processes (entire rule).

(*17*) R 336.1631 Emission of volatile organic compounds from existing process equipment utilized in manufacture of polystyrene or other organic resins (entire rule).

(*18*) R 336.1632 Emission of volatile organic compounds from existing automobile, truck, and business machine plastic part coating lines (entire rule).

(*19*) R 336.1702 General provisions of new sources of volatile organic compound emissions (entire rule).

(*20*) R 336.2004 Appendix A; reference test methods; adoption of federal reference test methods (entire rule).

(*21*) R 336.2006 Reference test method serving as alternate version of federal reference test method 25 by incorporating Byron analysis (entire rule).

(*22*) R 336.2007 Alternate version of procedure L, referenced in R 336.2040(10) (entire rule).

(*23*) R 336.2040 Method for determination of volatile organic compound emissions from coating lines and graphic arts lines (except R 336.2040(9) and R 336.2040(10)).

(*24*) R 336.2041 Recordkeeping requirements for coating lines and graphic arts lines (entire rule).

(B) Revisions to the following provisions of the Michigan Air Pollution Control Commission General Rules filed with the Secretary of State on November 3, 1993 and effective on November 18, 1993:

(*1*) R 336.1601 Definitions—Added definition of the term person responsible.

(*2*) R 336.1602 General provisions for existing sources of volatile organic compound emissions—Addition of provisions requiring submittal of site-specific SIP revisions to EPA for the use of equivalent control methods allowed under rules 336.1628(1) and 336.1629(1).

(*3*) R 336.1624 Emission of volatile organic compounds from existing graphic arts lines (entire rule).

(*4*) R 336.1628 Emission of volatile organic compounds from components of existing process equipment used in manufacturing synthetic organic chemicals and polymers; monitoring program (entire rule).

(*5*) R 336.1629 Emission of volatile organic compounds from components of existing process equipment used in processing natural gas; monitoring program (entire rule).

(C) Senate Bill No. 726 of the State of Michigan 87th Legislature for Stage I controls signed and effective on November 13, 1993.

(D) State of Michigan, Department of Natural Resources, Stipulation for Entry of Consent Order and Final Order No. 39–1993 which was adopted by the State on November 12, 1993.

(E) State of Michigan, Department of Natural Resources, Stipulation for Entry of Consent Order and Final Order No. 40–1993 which was adopted by the State on November 12, 1993.

(F) State of Michigan, Department of Natural Resources, Stipulation for Entry of Consent Order and Final Order No. 3–1993 which was adopted by the State on June 21, 1993.

(97) On November 12, 1993, the State of Michigan submitted a revision to the State Implementation Plan (SIP) for the implementation of a motor vehicle inspection and maintenance (I/M) program in the Grand Rapids and Muskegon ozone nonattainment areas. This revision included House Bill No. 4165 which establishes an I/M program in Western Michigan, SIP narrative, and the State's Request for Proposal (RFP) for implementation of the program. House Bill No. 4165 was signed and effective on November 13, 1993.

(i) Incorporation by reference.

(A) House Bill No. 4165; signed and effective November 13, 1993.

(ii) Additional materials.

(A) SIP narrative plan titled ''Motor Vehicle Emissions Inspection and Maintenance Program for Southeast Michigan, Grand Rapids MSA, and Muskegon MSA Moderate Nonattainment Areas,'' submitted to the EPA on November 12, 1993.

(B) RFP, submitted along with the SIP narrative on November 12, 1993.

(C) Supplemental materials, submitted on July 19, 1994, in a letter to EPA.

(98) [Reserved]

(99) On July 13, 1994, the State of Michigan requested a revision to the Michigan State Implementation Plan (SIP). The State requested that a consent order for the Eagle-Ottawa Leather Company of Grand Haven be included in the SIP.

(i) Incorporation by reference. State of Michigan, Department of Natural Resources, Stipulation for Entry of Consent Order and Final Order No. 7–1994 which was adopted on July 13, 1994.

(100) On June 11, 1993 the Michigan Department of Natural Resources (MDNR) submitted a plan, with revisions submitted on April 7, 1994 and October 14, 1994 for the purpose of bringing about the attainment of the National Ambient Air Quality Standards for particulate matter with an aerodynamic diameter less than or equal to a nominal 10 micrometers (PM) in the Wayne County moderate PM nonattainment area.

(i) Incorporation by reference.

(A) Consent Order 4–1993 effective October 12, 1994 issued by the MDNR. This Order limits the PM emissions for the Allied Signal, Inc., Detroit Tar Plant.

(B) Consent Order 5–1993 effective October 12, 1994 issued by the MDNR. This Order limits the PM emissions for the Asphalt Products Company, Plant 5A.

(C) Consent Order 6–1993 effective October 12, 1994 issued by the MDNR. This Order limits the PM emissions for the Clawson Concrete Company, Plant #1.

(D) Consent Order 7–1993 effective October 12, 1994 issued by the MDNR. This Order limits the PM emissions for the Cummings-Moore Graphite Company.

(E) Consent Order 8–1993 effective October 12, 1994 issued by the MDNR. This Order limits the PM emissions for the Delray Connecting Railroad Company.

(F) Consent Order 9–1993 effective October 12, 1994 issued by the MDNR. This Order limits the PM emissions for the Detroit Edison Company, River Rouge Plant.

(G) Consent Order 10–1993 effective October 12, 1994 issued by the MDNR. This Order limits the PM emissions for the Detroit Edison Company, Sibley Quarry.

(H) Consent Order 11–1993 effective October 12, 1994 issued by the MDNR. This Order limits the PM emissions for the city of Detroit, Detroit Water and Sewage Department, Wastewater Treatment Plant.

(I) Consent Order 12–1993 effective October 12, 1994 issued by the MDNR. This Order limits the PM emissions for the Ferrous Processing and Trading Company.

(J) Consent Order 13–1993 effective October 12, 1994 issued by the MDNR. This Order limits the PM emissions for the Ford Motor Company, Rouge Industrial Complex.

(K) Consent Order 14–1993 effective October 12, 1994 issued by the MDNR. This Order limits the PM emissions for the Ford Motor Company, Vulcan Forge.

(L) Consent Order 15–1993 effective October 12, 1994 issued by the MDNR. This Order limits the PM emissions for the Edward C. Levy Company, Detroit Lime Company.

(M) Consent Order 16–1993 effective October 12, 1994 issued by the MDNR. This Order limits the PM emissions for the Edward C. Levy Company, Plant #1.

(N) Consent Order 17–1993 effective October 12, 1994 issued by the MDNR. This Order limits the PM emissions for the Edward C. Levy Company, Plant #3.

(O) Consent Order 18–1993 effective October 12, 1994 issued by the MDNR. This Order limits the PM emissions for the Edward C. Levy Company, Plant #6.

(P) Consent Order 19–1993 effective October 12, 1994 issued by the MDNR. This Order limits the PM emissions for the Edward C. Levy Company, Plant 4 and 5.

(Q) Consent Order 20–1993 effective October 12, 1994 issued by the MDNR. This Order limits the PM emissions for the Edward C. Levy Company, Plant Scrap Up-Grade Facility.

(R) Consent Order 21–1993 effective October 12, 1994 issued by the MDNR. This Order limits the PM emissions for the Marblehead Lime, Brennan Avenue Plant.

(S) Consent Order 22–1993 effective October 12, 1994 issued by the MDNR. This Order limits the PM emissions for the Marblehead Lime, River Rouge Plant.

(T) Consent Order 23–1993 effective October 12, 1994 issued by the MDNR. This Order limits the PM emissions for the McLouth Steel Company, Trenton Plant.

(U) Consent Order 24–1993 effective October 12, 1994 issued by the MDNR. This Order limits the PM emissions for the Michigan Foundation Company, Cement Plant.

(V) Consent Order 25–1993 effective October 12, 1994 issued by the MDNR. This Order limits the PM emissions for the Michigan Foundation Company, Sibley Quarry.

(W) Consent Order 26–1993 effective October 12, 1994 issued by the MDNR. This Order limits the PM emissions for the Morton International, Inc., Morton Salt Division.

(X) Consent Order 27–1993 effective October 12, 1994 issued by the MDNR. This Order limits the PM emissions for the National Steel Corporation, Great Lakes Division.

(Y) Consent Order 28–1993 effective October 12, 1994 issued by the MDNR. This Order limits the PM emissions for the National Steel Corporation, Transportation and Materials Handling Division.

(Z) Consent Order 29–1993 effective October 12, 1994 issued by the MDNR. This Order limits the PM emissions for the Peerless Metals Powders, Incorporated.

(AA) Consent Order 30–1993 effective October 12, 1994 issued by the MDNR. This Order limits the PM emissions for the Rouge Steel Company.

(BB) Consent Order 31–1993 effective October 12, 1994 issued by the MDNR.

This Order limits the PM emissions for the Keywell Corporation.

(CC) Consent Order 32–1993 effective October 12, 1994 issued by the MDNR. This Order limits the PM emissions for the St. Marys Cement Company.

(DD) Consent Order 33–1993 effective October 12, 1994 issued by the MDNR. This Order limits the PM emissions for the United States Gypsum Company.

(EE) Consent Order 34–1993 effective October 12, 1994 issued by the MDNR. This Order limits the PM emissions for the Wyandotte Municipal Power Plant.

(101) On November 15, 1993, the State of Michigan submitted as a revision to the Michigan State Implementation Plan for ozone a State Implementation Plan for a motor vehicle inspection and maintenance program for the Detroit-Ann Arbor area. Michigan submitted House Bill No. 5016, signed by Governor John Engler on November 13, 1993.

(i) Incorporation by reference.

(A) State of Michigan House Bill No. 5016 signed by the Governor and effective on November 13, 1993.

(102) On November 12, 1993, the State of Michigan submitted as a revision to the Michigan State Implementation Plan for ozone a State Implementation Plan for a section 175A maintenance plan for the Detroit-Ann Arbor area as part of Michigan's request to redesignate the area from moderate nonattainment to attainment for ozone. Elements of the section 175A maintenance plan include a base year (1993 attainment year) emission inventory for NO_X and VOC, a demonstration of maintenance of the ozone NAAQS with projected emission inventories (including interim years) to the year 2005 for NO_X and VOC, a plan to verify continued attainment, a contingency plan, and an obligation to submit a subsequent maintenance plan revision in 8 years as required by the Clean Air Act. If the area records a violation of the ozone NAAQS (which must be confirmed by the State), Michigan will implement one or more appropriate contingency measure(s) which are contained in the contingency plan. Appropriateness of a contingency measure will be determined by an urban airshed modeling analysis. The Governor or his designee will select the contingency measure(s) to be implemented based on the analysis and the MDNR's recommendation. The menu of contingency measures includes basic motor vehicle inspection and maintenance program upgrades, Stage I vapor recovery expansion, Stage II vapor recovery, intensified RACT for degreasing operations, NO_X RACT, and RVP reduction to 7.8 psi. Michigan submitted legislation or rules for basic I/M in House Bill No 5016, signed by Governor John Engler on November 13, 1993; Stage I and Stage II in Senate Bill 726 signed by Governor John Engler on November 13, 1993; and RVP reduction to 7.8 psi in House Bill 4898 signed by Governor John Engler on November 13, 1993.

(i) Incorporation by reference.

(A) State of Michigan House Bill No. 5016 signed by the Governor and effective on November 13, 1993.

(B) State of Michigan Senate Bill 726 signed by the Governor and effective on November 13, 1993.

(C) State of Michigan House Bill No. 4898 signed by the Governor and effective on November 13, 1993.

(103) On August 26, 1994 Michigan submitted a site-specific SIP revision in the form of a consent order for incorporation into the federally enforceable ozone SIP. This consent order determines Reasonably Available Control Technology (RACT) specifically for the Enamalum Corporation Novi, Michigan facility for the emission of volatile organic compounds (VOCs).

(i) Incorporation by reference. The following Michigan Stipulation for Entry of Final Order By Consent.

(A) State of Michigan, Department of Natural Resources, Stipulation for Entry of Final Order By Consent No. 6–1994 which was adopted by the State on June 27, 1994.

(104) On July 13, 1995, the Michigan Department of Natural Resources (MDNR) submitted a contingency measures plan for the Wayne County particulate matter nonattainment area.

(i) Incorporation by reference.

(A) State of Michigan Administrative Rule 374 (R 336.1374), effective July 26, 1995.

(105) [Reserved]

(106) On March 9, 1995, the State of Michigan submitted as a revision to the Michigan State Implementation

Plan for ozone a State Implementation Plan for a section 175A maintenance plan for the Grand Rapids area as part of Michigan's request to redesignate the area from moderate nonattainment to attainment for ozone. Elements of the section 175A maintenance plan include an attainment emission inventory for NO_X and VOC, a demonstration of maintenance of the ozone NAAQS with projected emission inventories to the year 2007 for NO_X and VOC, a plan to verify continued attainment, a contingency plan, and a commitment to submit a subsequent maintenance plan revision in 8 years as required by the Clean Air Act. If a violation of the ozone NAAQS, determined not to be attributable to transport from upwind areas, is monitored, Michigan will implement one or more appropriate contingency measure(s) contained in the contingency plan. Once a violation of the ozone NAAQS is recorded, the State will notify EPA, review the data for quality assurance, and conduct a technical analysis, including an analysis of meteorological conditions leading up to and during the exceedances contributing to the violation, to determine local culpability. This preliminary analysis will be submitted to EPA and subjected to public review and comment. The State will solicit and consider EPA's technical advice and analysis before making a final determination on the cause of the violation. The Governor or his designee will select the contingency measure(s) to be implemented within six months of a monitored violation attributable to ozone and ozone precursors from the Grand Rapids area. The menu of contingency measures includes a motor vehicle inspection and maintenance program, Stage II vapor recovery, gasoline RVP reduction to 7.8 psi, RACT on major non-CTG VOC sources in the categories of coating of plastics, coating of wood furniture, and industrial cleaning solvents. Michigan submitted legislation or rules for I/M in House Bill No 4165, signed by Governor John Engler on November 13, 1993; Stage II in Senate Bill 726 signed by Governor John Engler on November 13, 1993; and RVP reduction to 7.8 psi in House Bill 4898 signed by Governor John Engler on November 13, 1993.

(i) Incorporation by reference.

(A) State of Michigan House Bill No. 4165 signed by the Governor and effective on November 13, 1993.

(B) State of Michigan Senate Bill 726 signed by the Governor and effective on November 13, 1993.

(C) State of Michigan House Bill No. 4898 signed by the Governor and effective on November 13, 1993.

[37 FR 10873, May 31, 1972]

EDITORIAL NOTE: For FEDERAL REGISTER citations affecting § 52.1170, see the List of CFR Sections Affected in the Finding Aids section of this volume.

§ 52.1171 Classification of regions.

The Michigan plan was evaluated on the basis of the following classifications:

Air quality control region	Pollutant				
	Particulate matter	Sulfur oxides	Nitrogen dioxide	Carbon monoxide	Ozone
Metropolitan Detroit-Port Huron Intrastate	I	I	III	III	III
Metropolitan Toledo Interstate	I	I	III	III	I
South Central Michigan Intrastate	II	II	III	III	III
South Bend-Elkhart (Indiana)-Benton Harbor (Michigan) Interstate	I	IA	III	III	III
Central Michigan Intrastate	II	III	III	III	III
Upper Michigan Intrastate	III	III	III	III	III

[37 FR 10873, May 31, 1972, as amended at 39 FR 16346, May 8, 1974; 45 FR 29801, May 6, 1980]

§ 52.1172 Approval status.

With the exceptions set forth in this subpart, the Administrator approves Michigan's plan for the attainment and maintenance of the National Ambient Air Quality Standards under section 110 of the Clean Air Act. Furthermore, the Administrator finds the plan satisfies all requirements of Part D, Title I of the Clean Air Act as amended in

1977, except as noted below. In addition, continued satisfaction of the requirements of Part D for the ozone portion of the SIP depends on the adoption and submittalof RACT requirements by July 1, 1980 for the sources covered by CTGs between January 1978 and January 1979 and adoption and submittal by each subsequent January of additional RACT requirements for sources covered by CTGs issued by the previous January.

[45 FR 29801, May 6, 1980]

§ 52.1173 Control strategy: Particulates.

(a) *Part D—Disapproval.* The following specific revisions to the Michigan Plan are disapproved:

(1) Rule 336.1331, Table 31, Item C: Emission limits for Open Hearth Furnaces, Basic Oxygen Furnaces, Electric Arc Furnaces, Sintering Plants, Blast Furnaces, Heating and Reheating Furnaces.

(2) Rules 336.1371 (Fugitive dust control programs other than areas listed in table 36.), 336.1372 (Fugitive dust control programs; required activities; typical control methods.) and 336.1373 (Fugitive dust control programs; areas listed in table 36.) for control of industrial fugitive particulate emissions sources.

(b) Part D—Conditional Approval—The Michigan overall Plan for primary and secondary nonattainment areas is approved provided that the following conditions are satisfied:

(1) The State officially adopts final industrial fugitive regulations that represent RACT for traditional sources and submits these finally effective regulations to USEPA by January 31, 1981.

(2) The State adopts and submits regulations reflecting RACT for Basic Oxygen Furnaces, Electric Arc Furnaces, Sintering Plants, Blast Furnaces and Heating and Reheating Furnaces.

(3) Rule 336.1331, Table 31, Item C: Coke Oven Preheater Equipment Effective After July 1, 1979—The State clarifies the compliance test method to include measurement of the whole train.

(4) Rule 336.1349—The State submits consent orders containing enforceable increments insuring reasonable further progress for each source subject to Rules 336.1350 through 336.1357.

(5) Rule 336.1350—The State adopts and submits an acceptable inspection method for determining compliance with the rule.

(6) Rule 336.1352—The State adopts and submits the following clarifications to the rule: (a) The rule regulates emissions from the receiving car itself during the pushing operation; (b) in the phrase ''eight consecutive trips,'' ''consecutive'' is defined as ''consecutively observed trips''; (c) the word ''trips'' is defined as ''trips per battery'' or ''trips per system''; (d) the 40% opacity fugitive emissions limitation refers to an instantaneous reading and not an average; (e) the method of reading opacity is defined.

(7) Rule 336.1353—The State adopts and submits: (a) An acceptable test methodology for determining compliance with the rule; and (b) a clarification that the exception to the visible emission prohibition of 4% of standpipe emission points refers to ''operating'' ovens.

(8) Rule 336.1356—The State adopts and submits a clarification of the test methodology to determine compliance with the rule.

(9) Rule 336.1357—The State adopts and submits a clarification of the test methodology to determine compliance with the rule.

(10) The State adopts and submits a regulation reflecting RACT for coke battery combustion stacks.

(11) The State adopts and submits an acceptable test method for application of Rule 336.1331, Table 32 to quench towers, or, in the alternative, adopts and submits a limitation reflecting RACT for quench tower emissions based on the quantity of total dissolved solids in the quench water.

(12) The State adopts and submits rules requiring RACT for scarfing emissions.

(13) Part 10 Testing—The State adopts and submits the following clarifications to the test methods: (a) Testing of fugitive emissions from blast furnaces are conducted during the cast; (b) the starting and ending period is specified for basic oxygenfurnaces (for both primary and secondary emissions generating operations), electric arc

furnaces and for each of the three emission points at sinter plants.

(14) The State conducts additional particulate studies in the Detroit area by September, 1980.

(c) *Disapprovals.* EPA disapproves the following specific revisions to the Michigan Plan:

(1) The State submitted Consent Order No. 16–1982 on June 24, 1982, Great Lakes Steel, a Division of the National Steel Corporation as a revision to the Michigan State Implementation Plan. EPA disapproves this revision, because it does not satisfy all the requirements of EPA's proposed Emission Trading Policy Statement of April 7, 1982 (47 FR 15076).

(d) Approval—On April 29, 1988, the State of Michigan submitted a committal SIP for particulate matter with an aerodynamic diameter equal to or less than 10 micrometers (PM_{10}) for Michigan's Group II areas. The Group II areas of concern are in the City of Monroe and an area surrounding the City of Carrollton. The committal SIP contains all the requirements identified in the July 1, 1987, promulgation of the SIP requirements for PM_{10} at 52 FR 24681.

[46 FR 27931, May 22, 1981, as amended at 49 FR 11834, Mar. 28, 1984; 50 FR 33540, Aug. 20, 1985; 55 FR 17752, Apr. 27, 1990]

§ 52.1174 Control strategy: Ozone.

(a) Part D—Conditional Approval—Michigan Rules 336.1603 and 336.1606 are approved provided that the following conditions are satisfied:

(1) *Rule 336.1606*—The State either promulgates a rule with a 120,000 gallon per year throughput exemption for gasoline dispensing facilities for sources located in Wayne, Macomb and Oakland Counties. The State must either submit the rule to USEPA or demonstrate that the allowable emissions resulting from the application of its existing rule with 250,000 gallon per year throughput exemption for gasoline dispensing facilities are less than five percent greater than the allowable emissions resulting from the application of the CTG presumptive norm. The State must comply with this condition by May 6, 1981, and any necessary regulations must be finally promulgated by the State and submitted to USEPA by September 30, 1981.

(b) Approval—On November 16, 1992, the Michigan Department of Natural Resources submitted Natural Resources Commission Rule 336.202 (Rule 2), Sections 5 and 14a of the 1965 Air Pollution Act 348, and the 1991 Michigan Air Pollution Reporting Forms, Reference Tables, and General Instructions as the States emission statement program. Natural Resources Commission Rule 336.202 (Rule 2) became effective November 11, 1986. Section 5 and 14a of the 1965 Air Pollution Act 348 became effective July 23, 1965. These rules have been incorporated by reference at 40 CFR 52.1170(c)(93). On October 25, 1993, the State submitted the 1993 Michigan Air Pollution Reporting Forms, Reference Tables, and General Instructions, along with an implementation strategy for the State's emission statement program.

(c) Approval—On January 5, 1993, the Michigan Department of Natural Resources submitted a revision to the ozone State Implementation Plan (SIP) for the 1990 base year inventory. The inventory was submitted by the State of Michigan to satisfy Federal requirements under section 182(a)(1) of the Clean Air Act as amended in 1990 (the Act), as a revision to the ozone SIP for the Grand Rapids and Muskegon areas in Michigan designated nonattainment, classified as moderate. These areas include counties of Muskegon, and the two county Grand Rapids area (which are the counties of Kent and Ottawa).

EDITORIAL NOTE: At 59 FR 40828, Aug. 10, 1994 the following paragraph (c) was added to § 52.1174.

(c) Approval—On November 12, 1993, the Michigan Department of Natural Resources submitted a petition for exemption from the oxides of nitrogen requirements of the Clean Air Act for the Detroit-Ann Arbor ozone nonattainment area. The submittal pertained to the exemption from the oxides of nitrogen requirements for conformity, inspection and maintenance, reasonably available control technology, and new source review. These are required by sections 176(c), 182(b)(4), and 182(f) of the 1990 amended Clean Air Act, respectively.

(d) In a letter addressed to David Kee, EPA, dated March 30, 1994, Dennis M. Drake, State of Michigan, stated:

(1) Michigan has not developed RACT regulations for the following industrial source categories, which have been addressed in Control Techniques Guidance (CTG) documents published prior to the Clean Air Act Amendments of 1990, because no affected sources are located in the moderate nonattainment counties:

(i) Large petroleum dry cleaners;

(ii) SOCMI air oxidation processes;

(iii) High-density polyethylene and polypropylene resin manufacturing; and

(iv) Pneumatic rubber tire manufacturing.

(2) (Reserved)

(e) Approval—On July 1, 1994, the Michigan Department of Natural Resources submitted a petition for exemption from the oxides of nitrogen requirements of the Clean Air Act for the East Lansing ozone nonattainment area. The submittal pertained to the exemption from the oxides of nitrogen requirements for conformity and new source review. Theses are required by sections 176(c) and 182(f) of the 1990 amended Clean Air Act, respectively. If a violation of the ozone standard occurs in the East Lansing ozone nonattainment area, the exemption shall no longer apply.

(f) Approval—On July 8, 1994, the Michigan Department of Natural Resources submitted a petition for exemption from the oxides of nitrogen requirements of the Clean Air Act for the Genesee County ozone nonattainment area. The submittal pertained to the exemption from the oxides of nitrogen requirements for conformity and new source review. These are required by sections 176(c) and 182(f) of the 1990 amended Clean Air Act, respectively. If a violation of the ozone standard occurs in the Genesee County ozone nonattainment area, the exemption shall no longer apply.

(g) [Reserved]

(h) Approval—On January 5, 1993, the Michigan Department of Natural Resources submitted a revision to the ozone State Implementation Plan for the 1990 base year emission inventory. The inventory was submitted by the State of Michigan to satisfy Federal requirements under section 182(a)(1) of the Clean Air Act as amended in 1990, as a revision to the ozone State Implementation Plan for the Detroit-Ann Arbor moderate ozone nonattainment area. This area includes Livingston, Macomb, Monroe, Oakland, St. Clair, Washtenaw, and Wayne counties.

(i) Approval—On November 12, 1993, the Michigan Department of Natural Resources submitted a request to redesignate the Detroit-Ann Arbor (consisting of Livingston, Macomb, Monroe, Oakland, St. Clair, Washtenaw, and Wayne counties) ozone nonattainment area to attainment for ozone. As part of the redesignation request, the State submitted a maintenance plan as required by 175A of the Clean Air Act, as amended in 1990. Elements of the section 175A maintenance plan include a base year (1993 attainment year) emission inventory for NO_X and VOC, a demonstration of maintenance of the ozone NAAQS with projected emission inventories (including interim years) to the year 2005 for NO_X and VOC, a plan to verify continued attainment, a contingency plan, and an obligation to submit a subsequent maintenance plan revision in 8 years as required by the Clean Air Act. If the area records a violation of the ozone NAAQS (which must be confirmed by the State), Michigan will implement one or more appropriate contingency measure(s) which are contained in the contingency plan. Appropriateness of a contingency measure will be determined by an urban airshed modeling analysis. The Governor or his designee will select the contingency measure(s) to be implemented based on the analysis and the MDNR's recommendation. The menu of contingency measures includes basic motor vehicle inspection and maintenance program upgrades, Stage I vapor recovery expansion, Stage II vapor recovery, intensified RACT for degreasing operations, NO_X RACT, and RVP reduction to 7.8 psi. The redesignation request and maintenance plan meet the redesignation requirements in sections 107(d)(3)(E) and 175A of the Act as amended in 1990, respectively. The redesignation meets the Federal requirements of section 182(a)(1) of the Clean Air Act as a revision to the

Michigan Ozone State Implementation Plan for the above mentioned counties.

(j) Approval—On November 12, 1993, the Michigan Department of Natural Resources submitted a petition for exemption from the oxides of nitrogen requirements of the Clean Air Act for the Detroit-Ann Arbor ozone nonattainment area. The submittal pertained to the exemption from the oxides of nitrogen requirements for conformity, inspection and maintenance, reasonably available control technology, and new source review. These are required by sections 176(c), 182(b)(4), and 182(f) of the 1990 amended Clean Air Act, respectively. If a violation of the ozone standard occurs in the Detroit-Ann Arbor ozone nonattainment area, the exemption shall no longer apply.

(k) Determination—USEPA is determining that, as of July 20, 1995, the Grand Rapids and Muskegon ozone nonattainment areas have attained the ozone standard and that the reasonable further progress and attainment demonstration requirements of section 182(b)(1) and related requirements of section 172(c)(9) of the Clean Air Act do not apply to the areas for so long as the areas do not monitor any violations of the ozone standard. If a violation of the ozone NAAQS is monitored in either the Grand Rapids or Muskegon ozone nonattainment area, the determination shall no longer apply for the area that experiences the violation.

(l) Approval—EPA is approving the section 182(f) oxides of nitrogen (NO_X) reasonably available control technology (RACT), new source review (NSR), vehicle inspection/maintenance (I/M), and general conformity exemptions for the Grand Rapids (Kent and Ottawa Counties) and Muskegon (Muskegon County) moderate nonattainment areas as requested by the States of Illinois, Indiana, Michigan, and Wisconsin in a July 13, 1994 submittal. This approval also covers the exemption of NO_X transportation and general conformity requirements of section 176(c) for the Counties of Allegan, Barry, Bay, Berrien, Branch, Calhoun, Cass, Clinton, Eaton, Gratiot, Genesee, Hillsdale, Ingham, Ionia, Jackson, Kalamazoo, Lenawee, Midland, Montcalm, St. Joseph, Saginaw, Shiawasse, and Van Buren.

(m)–(n) [Reserved]

(o) Approval—On March 9, 1996, the Michigan Department of Environmental Quality submitted a request to redesignate the Grand Rapids ozone nonattainment area (consisting of Kent and Ottawa Counties) to attainment for ozone. As part of the redesignation request, the State submitted a maintenance plan as required by 175A of the Clean Air Act, as amended in 1990. Elements of the section 175A maintenance plan include an attainment emission inventory for NO_X and VOC, a demonstration of maintenance of the ozone NAAQS with projected emission inventories to the year 2007 for NO_X and VOC, a plan to verify continued attainment, a contingency plan, and a commitment to submit a subsequent maintenance plan revision in 8 years as required by the Clean Air Act. If a violation of the ozone NAAQS, determined not to be attributable to transport from upwind areas, is monitored, Michigan will implement one or more appropriate contingency measure(s) contained in the contingency plan. Once a violation of the ozone NAAQS is recorded, the State will notify EPA, review the data for quality assurance, and conduct a technical analysis, including an analysis of meteorological conditions leading up to and during the exceedances contributing to the violation, to determine local culpability. This preliminary analysis will be submitted to EPA and subjected to public review and comment. The State will solicit and consider EPA's technical advice and analysis before making a final determination on the cause of the violation. The Governor or his designee will select the contingency measure(s) to be implemented within 6 months of a monitored violation attributable to ozone and ozone precursors from the Grand Rapids area. The menu of contingency measures includes a motor vehicle inspection and maintenance program, Stage II vapor recovery, RVP reduction to 7.8 psi, RACT on major non-CTG VOC sources in the categories of coating of plastics, coating of wood furniture, and industrial cleaning solvents. The redesignation request and maintenance plan meet the redesignation requirements in section 107(d)(3)(E) and 175A of the Act as

amended in 1990, respectively. The redesignation meets the Federal requirements of section 182(a)(1) of the Clean Air Act as a revision to the Michigan Ozone State Implementation Plan for the above mentioned counties.

[45 FR 58528, Sept. 4, 1980, as amended at 50 FR 5250, Feb. 7, 1985; 59 FR 10753, Mar. 8, 1994; 59 FR 37947, July 26, 1994; 59 FR 40828, Aug. 10, 1994; 59 FR 46190, Sept. 7, 1994; 60 FR 12451, Mar. 7, 1995; 60 FR 12477, Mar. 7, 1995; 60 FR 20649, Apr. 27, 1995; 60 FR 28731, June 2, 1995; 60 FR 37013, July 19, 1995; 60 FR 37370, July 20, 1995; 61 FR 2438, Jan. 26, 1996; 61 FR 31849, June 21, 1996]

§ 52.1175 Compliance schedules.

(a) The requirements of § 51.15(a)(2) of this chapter as of May 31, 1972, (36 FR 22398) are not met since Rule 336.49 of the Michigan Air Pollution Control Commission provides for individual compliance schedules to be submitted to the State Agency by January 1, 1974. This would not be in time for submittal to the Environmental Protection Agency with the first semiannual report.

(b) [Reserved]

(c) The requirements of § 51.262(a) of this chapter are not met since compliance schedules with adequate increments of progress have not been submitted for every source for which they are required.

(d) *Federal compliance schedules.* (1) Except as provided in paragraph (d)(3) of this section, the owner or operator of any stationary source subject to the following emission-limiting regulations in the Michigan implementation plan shall comply with the applicable compliance schedule in paragraph (d)(2) of this section: Air Pollution Control Commission, Department of Public Health, Michigan Rule 336.49.

(2) *Compliance schedules.* (i) The owner or operator of any boiler or furnace of more than 250 million Btu per hour heat input subject to Rule 336.49 and located in the Central Michigan Intrastate AQCR, South Bend-Elkhart-Benton Harbor Interstate AQCR, or Upper Michigan Intrastate AQCR (as defined in part 81 of this title) shall notify the Administrator, no later than October 1, 1973, of his intent to utilize either low-sulfur fuel or stack gas desulfurization to comply with the limitations effective July 1, 1975, in Table 3 or Table 4 of Rule 336.49.

(ii) Any owner or operator of a stationary source subject to paragraph (d)(2)(i) of this section who elects to utilize low-sulfur fuel shall take the following actions with respect to the source no later than the dates specified.

(*a*) November 1, 1973—Submit to the Administrator a projection of the amount of fuel, by types, that will be substantially adequate to enable compliance with Table 3 of Rule 336.49 on July 1, 1975, and for at least one year thereafter.

(*b*) December 31, 1973—Sign contracts with fuel suppliers for projected fuel requirements.

(*c*) January 31, 1974—Submit a statement as to whether boiler modifications will be required. If modifications will be required, submit plans for such modifications.

(*d*) March 15, 1974—Let contracts for necessary boiler modifications, if applicable.

(*e*) June 15, 1974—Initiate onsite modifications, if applicable.

(*f*) March 31, 1975—Complete onsite modifications, if applicable.

(*g*) July 1, 1975—Achieve final compliance with the applicable July 1, 1975, sulfur-in-fuel limitation listed in Table 3 of Rule 336.49.

(iii) Any owner or operator of a stationary source subject to paragraph (d)(2)(i) of this section who elects to utilize stack gas desulfurization shall take the following actions with respect to the source no later than the dates specified.

(*a*) November 1, 1973—Let necessary contracts for construction.

(*b*) March 1, 1974—Initiate onsite construction.

(*c*) March 31, 1975—Complete onsite construction.

(*d*) July 1, 1975—Achieve final compliance with the applicable July 1, 1975, emission limitation listed in Table 4 of Rule 336.49.

(*e*) If a performance test is necessary for a determination as to whether compliance has been achieved, such a test must be completed by July 1, 1975. Ten days prior to such a test, notice must be given to the Administrator to afford

him the opportunity to have an observer present.

(iv) The owner or operator of any boiler or furnace of more than 250 million Btu per hour heat input subject to Rule 336.49 and located in the Central Michigan Intrastate AQCR. South Bend-Elkhart-Benton Harbor Interstate AQCR, or Upper Michigan Intrastate AQCR shall notify the Administrator, no later than January 31, 1974, of his intent to utilize either low-sulfur fuel or stack gas desulfurization to comply with the limitation effective July 1, 1978, in Table 3 or Table 4 of Rule 336.49.

(v) Any owner or operator of a stationary source subject to paragraph (d)(2)(iv) of this section who elects to utilize low-sulfur fuel shall take the following actions with respect to the source no later than the dates specified.

(*a*) October 15, 1976—Submit to the Administrator a projection of the amount of fuel, by types, that will be substantially adequate to enable compliance with Table 3 of Rule 336.49 on July 1, 1978, and for at least one year thereafter.

(*b*) December 31, 1976—Sign contracts with fuel suppliers for projected fuel requirements.

(*c*) January 31, 1977—Submit a statement as to whether boiler modifications will be required. If modifications will be required, submit plans for such modifications.

(*d*) March 15, 1977—Let contracts for necessary boiler modifications, if applicable.

(*e*) June 15, 1977—Initiate onsite modifications, if applicable.

(*f*) March 31, 1978—Complete onsite modifications, if applicable.

(*g*) July 1, 1978—Achieve final compliance with the applicable July 1, 1978, sulfur-in-fuel limitation listed in Table 3 of Rule 336.49.

(vi) Any owner or operator of a stationary source subject to paragraph (d)(2)(iv) of this section who elects to utilize stack gas desulfurization shall take the following actions with regard to the source no later than the dates specified.

(*a*) November 1, 1976—Let necessary contracts for construction.

(*b*) March 1, 1977—Initiate onsite construction.

(*c*) March 31, 1978—Complete onsite construction.

(*d*) July 1, 1978—Achieve final compliance with the applicable July 1, 1978, mission limitation listed in Table 4 of Rule 336.49.

(*e*) If a performance test is necessary for a determination as to whether compliance has been achieved, such a test must be completed by July 1, 1978. Ten days prior to such a test, notice must be given to the Administrator to afford him the opportunity to have an observer present.

(vii) Any owner or operator subject to a compliance schedule above shall certify to the Administrator, within five days after the deadline for each increment of progress in that schedule, whether or not the increment has been met.

(3)(i) Paragraphs (d) (1) and (2) of this section shall not apply to a source which is presently in compliance with Table 3 or Table 4 of Rule 336.49 and which has certified such compliance to the Administrator by October 1, 1973. The Administrator may request whatever supporting information he considers necessary for proper certification.

(ii) Any compliance schedule adopted by the State and approved by the Administrator shall satisfy the requirements of this paragraph for the affected source.

(iii) Any owner or operator subject to a compliance schedule in this paragraph may submit to the Administrator no later than October 1, 1973, a proposed alternative compliance schedule. No such compliance schedule may provide for final compliance after the final compliance date in the applicable compliance schedule of this paragraph. If promulgated by the Administrator, such schedule shall satisfy the requirements of this paragraph for the affected source.

(4) Nothing in this paragraph shall preclude the Administrator from promulgating a separate schedule for any source to which the application of the compliance schedule in paragraph (d)(2) of this section fails to satisfy the requirements of §§51.261 and 51.262(a) of this chapter.

(e) The compliance schedules for the sources identified below are approved as meeting the requirements of § 51.104 and subpart N of this chapter. All regulations cited are air pollution control regulations of the State, unless otherwise noted.

MICHIGAN

[See footnotes at end of table]

Source	Location	Regulations involved	Date schedule adopted	Final compliance date
BERRIEN COUNTY				
Conoco, Inc.	Berrien	R336.1603, R336.1609.	Sept. 26, 1981	Dec. 31, 1982.
CALHOUN COUNTY				
Clark Oil and Refining Corp	Calhoun	R336.1603 R336.1609.	May 14, 1982	Dec. 31, 1982.
CHARLEVOIX COUNTY				
Northern Michigan Electric Cooperative Advance Steam Plant.	Boyne City	336.1401 (336.49).	Jan. 10, 1980	Jan. 1, 1985.
GENESEE COUNTY				
Buick Motor Division	City of Flint	R336.1301	May 5, 1980	Dec. 31, 1982.
GM Warehousing Dist. Div. Boilers 1 and 2	Genesee	R336.1331	Dec. 31, 1981	Oct. 15, 1983.
GM Warehousing Dist. Div. Boilers 3 and 4	.....do	R336.1331	Dec. 1, 1981	Oct. 15, 1981.
MACOMB COUNTY				
New Haven Foundry	Macomb County.	R336.1301, R336.1331, R336.1901.	Aug. 14, 1980	June 30, 1985.
MIDLAND COUNTY				
Dow Chemical	Midland	R336.1301 and R336.1331.	July 21, 1982	Dec. 31, 1985.
MONROE COUNTY				
Detroit Edison (Monroe plant)	Monroe	336.49	July 7, 1977	Jan. 1, 1985.
Dundee Cement Company	Dundee	336.41, 44 (336.1301, 336.1331).	Oct. 17, 1979	Dec. 31, 1983.
Union Camp	Monroe	336.1401 (336.49)	Jan. 3, 1980	Jan. 1, 1985.
MUSKEGON COUNTY				
Consumers Power Company (B. C. Cobb)	Muskegon	336.1401 (336.49)	Dec. 10, 1979	Jan. 1, 1985.
S. D. Warren Co	Muskegon	336.49 (336.1401).	Oct. 31, 1979	Nov. 1, 1984.
Marathon Oil	.....do	336.1603	July 31, 1981	Dec. 31, 1982.
SAGINAW COUNTY				
Grey Iron Casting and Nodular Iron Casting Plants	Saginaw	R336.1301	Apr. 16, 1980	Dec. 31, 1982.
WAYNE COUNTY				
Boulevard Heating Plant	Wayne	R336.1331	Apr. 28, 1981	Dec. 31, 1982.

Footnotes:
[1] For the attainment of the primary standard.
[2] For the attainment of the secondary standard.

[3] For the maintenance of the secondary standard.

(f) The compliance schedules for the sources identified below are disapproved as not meeting the requirements of §51.15 of this chapter. All regulations cited are air pollution control regulations of the State, unless otherwise noted.

MICHIGAN

Source	Location	Regulation involved	Date schedule adopted
BAY COUNTY			
Consumer Power (Karn Plant)	Essexville	336.44	Sept. 18, 1973.
OTTAWA COUNTY			
Consumer Power Co. (Campbell Plant Units 1, 2)	West Olive	336.44	Sept. 18, 1973.

[37 FR 10873, May 31, 1972]

EDITORIAL NOTE: For FEDERAL REGISTER citations affecting §52.1175, see the List of CFR Sections Affected in the Finding Aids section of this volume.

§52.1176 Review of new sources and modifications. [Reserved]

[37 FR 10373, May 31, 1972]

§§52.1177—52.1179 [Reserved]

§52.1180 Significant deterioration of air quality.

(a) The requirements of sections 160 through 165 of the Clean Air Act are not met, since the plan does not include approvable procedures for preventing the significant deterioration of air quality.

(b) Regulations for preventing significant deterioration of air quality. The provisions of §52.21 (b) through (w) are hereby incorporated and made a part of the applicable state plan for the State of Michigan.

(c) All applications and other information required pursuant to §52.21 from sources located in the State of Michigan shall be submitted to the Michigan Department of Natural Resources, Air Quality Division, P.O. Box 30028, Lansing, Michigan 48909.

[45 FR 8299, Feb. 7, 1980; 45 FR 52741, Aug. 7, 1980]

§52.1181 Interstate pollution.

(a) The requirements of Section 126(a)(1) of the Clean Air Act as amended in 1977 are not met since the state has not submitted to EPA, as a part of its State Implementation Plan, the procedures on which the state is relying to notify nearby states of any proposed major stationary source which may contribute significantly to levels of air pollution in excess of the National Ambient Air Quality Standards in that state.

[46 FR 30084, June 5, 1981]

§52.1182 State boards.

(a) The requirements of Section 128 of the Clean Air Act as amended in 1977 are not met since the state has not submitted to EPA, as a part of its State Implementation Plan, the measures on which the state is relying to insure that the Air Pollution Control Commission contains a majority of members who represent the public interest and do not derive a significant portion of their income from persons subject to permits or enforcement orders under the Act and that the board members adequately disclose any potential conflicts of interest.

[46 FR 30084, June 5, 1981]

§52.1183 Visibility protection.

(a) The requirements of section 169A of the Clean Air Act are not met, because the plan does not include approvable procedures for protection of visibility in mandatory Class I Federal areas.

(b) Regulation for visibility monitoring and new source review. The provisions of §§ 52.26 and 52.28 are hereby incorporated and made a part of the applicable plan for the State of Michigan.

(c) *Long-term strategy*. The provisions of § 52.29 are hereby incorporated and made part of the applicable plan for the State of Michigan.

[50 FR 28553, July 12, 1985, as amended at 52 FR 45137, Nov. 24, 1987]

§ 52.1184 Small business stationary source technical and environmental compliance assistance program.

The Michigan program submitted on November 13, 1992, January 8, 1993, and November 12, 1993, as a requested revision to the Michigan State Implementation Plan satisfies the requirements of section 507 of the Clean Air Act Amendments of 1990.

[59 FR 28788, June 3, 1994]

Subpart Y—Minnesota

§ 52.1219 Identification of plan—Conditional approval.

(a) On November 12, 1993, the Minnesota Pollution Control Agency submitted a revision request to Minnesota's carbon monoxide SIP for approval of the State's basic inspection and maintenance (I/M) program. The basic I/M program requirements apply to sources in the State's moderate nonattainment areas for carbon monoxide and includes the following counties: Anoka, Carver, Dakota, Hennepin, Ramsey, Scott, and Washington Counties. The USEPA is conditionally approving Minnesota's basic I/M program provided that the State adopt specific enforceable measures as outlined in its July 5, 1994 letter from Charles W. Williams, Commissioner, Minnesota Air Pollution Control Agency.

(i) Incorporation by reference.

(A) Minnesota Rules relating to Motor Vehicle Emissions parts 7023.1010 to 7023.1105, effective January 8, 1994.

(ii) Additional material.

(A) Letter from the State of Minnesota to USEPA dated July 5, 1994.

[59 FR 51863, Oct. 13, 1994]

§ 52.1220 Identification of plan.

(a) Title of plan: ''Implementation Plan to Achieve National Ambient Air Quality Standards.''

(b) The plan was officially submitted on January 28, 1972.

(c) The plan revisions listed below were submitted on the dates specified.

(1) A revised copy of the State emergency episode criteria was forwarded on February 7, 1972. (Non-regulatory)

(2) Information concerning intergovernmental cooperation was submitted by the Minnesota Pollution Control Agency on March 27, 1972.

(3) Certification that the State had adopted amendments to APC–1, 3, 4, 11, and 15, adopted a new air pollution control regulation (APC–16) and projected manpower resources was submitted by the State on April 28, 1972.

(4) An opinion on the availability of emission data to the public and evaluation of regulation concerning new construction was submitted by the State Attorney General's office on June 15, 1972. (Non-regulatory)

(5) A revised version of the State's regulation APC–3 was submitted by the Governor on July 25, 1972.

(6) On June 8, 1973, the Governor of Minnesota submitted a transportation control plan for the Minneapolis-St. Paul Intrastate Air Quality Control Region.

(7) Information concerning the transportation control plan was submitted on June 18, 1973, by the Minnesota Pollution Control Agency.

(8) Compliance schedules were submitted on June 28, 1973, by the Minnesota Pollution Control Agency.

(9) Information concerning the transportation control plan was submitted on July 30, 1973, by the Metropolitan Transit Commission.

(10) Information concerning the transportation control plan was submitted on August 1, 1973, by the Minnesota Department of Highways.

(11) Compliance schedules were submitted on August 9, 1973, by the Minnesota Pollution Control Agency.

(12) On November 15, 1974, the Governor of Minnesota submitted recommended Air Quality Maintenance Area identifications.

(13) A request for an extension of the statutory timetable for the submittal

of the portion of the Minnesota State Implementation Plan implementing the National Secondary Ambient Air Quality Standards for total suspended particulates was submitted by the Executive Director of the Minnesota Pollution Control Agency on January 8, 1979, and was supplemented with additional information on March 9, 1979.

(14) A transportation control plan for the St. Cloud Metropolitan Area was submitted on May 17, 1979, by the Minnesota Pollution Control Agency.

(15) Transportation control plans for the Metropolitan Areas of Duluth, Rochester and Minneapolis-St. Paul were submitted on July 3, 1979, and July 23, 1979, by the Minnesota Pollution Control Agency.

(16) On March 5, 1980, the State of Minnesota submitted a revision to provide for modification of the existing air quality surveillance network. An amendment to the revision was submitted by the State of Minnesota on June 2, 1980.

(17) The sulfur dioxide control plan and revised operating permits for the Rochester and Twin Cities nonattainment areas were submitted by the State of Minnesota on July 17, 1980, and August 4, 1980. Amendments to the control plans were submitted on September 4, 1980. EPA's approval of the control plan includes approval of the emission limitations contained in the revised operating permits.

(18) Stipulation Agreement between the State Pollution Control Agency and Erie Mining Company submitted by the State on February 20, 1981.

(19) On July 29, 1981, the Minnesota Pollution Control Agency submitted an amendment to the transportation control plan for the Minneapolis-St. Paul Metropolitan Area.

(20) On August 4, 1980, and October 17, 1980, the State submitted its total suspended particulate Part D control plans for the Twin Cities Seven County Metropolitan Area and the City of Duluth. As part of the control strategies the State on January 5, 1981 submitted rule APC–33 and on January 23, 1981 further submitted amended and new rules. The amended and new rules that control total suspended particulate (TSP) emissions are: Amended APC–2, APC–4, APC–5, APC–7, APC–11; and new APC–18, APC–21, APC–22, APC–23, APC–24, APC–25, APC–26, APC–28, APC–29, and APC–32. Regulations APC–4, APC–24, and APC–32 are only approved as they apply to TSP emissions.

(21) On January 23, 1981, the State submitted new rules and amendments to some of their previously approved rules. On November 17, 1981, the State submitted amendments to APC–33. On May 6, 1982 (47 FR 19520), EPA approved some of the rules insofar as they applied to the total suspended particulate strategy for the Twin Cities Seven County Metropolitan Area and the City of Duluth. The remainder of the rules are:

(i) Those portions of APC–4, APC–24, and APC–32 which control emissions of sulfur dioxide, nitrogen dioxide, and carbon monoxide; (ii) the amendments to APC–33; and (iii) APC–8, APC–12, APC–13, APC–15, APC–16, APC–19 and APC–39.

(22) On April 28, 1983, Minnesota submitted its Lead SIP. Additional information was submitted on February 15, 1984, and February 21, 1984.

(23) On May 20, 1985, and on April 17, 1986, the State submitted a carbon monoxide plan for the intersection of Snelling and University Avenues in the City of St. Paul. The plan committed to improved signal progression through the intersection by December 31, 1987, and a parking ban on University Avenue within 1 block in either direction of the intersection with Snelling Avenue by December 31, 1989.

(i) Incorporation by reference.

(A) Amendment to Air Quality Control Plan for Transportation for the Metropolitan Council of the Twin Cities Area dated January 28, 1985.

(B) Letter from Minnesota Pollution Control Agency, dated April 17, 1986, and letter from the City of St. Paul, dated April 1, 1986, committing to implementing of transportation control measures.

(24) On January 7, 1985, the State of Minnesota submitted a consolidated permit rule (CPR) to satisfy the requirements of 40 CFR 51.160 through 51.164 for a general new source review (NSR) program, including lead. On October 25, 1985, the State submitted a Memorandum of Agreement (MOA) which remedied certain deficiencies (40

CFR 52.1225(d)). On October 1, 1986, and January 14, 1987, the State committed to implement its NSR program using USEPA's July 8, 1985 (50 FR 27892), regulations for implementing the stack height requirements of Section 123 of the Clean Air Act (40 CFR 52.1225(e)). USEPA is approving the above for general NSR purposes for all sources, except it is disapproving them for those few sources subject to an NSPS requirement (40 CFR Part 60) and exempted from review under 6 MCAR section 4.4303 B.3. For these sources, NSR Rule APC 3 (40 CFR 52.1220(c)(5)), will continue to apply. Additionally, USEPA is taking no action on the CPR in relationship to the requirements of Section 111, Part C, and Part D of the Clean Air Act.

(i) Incorporation by reference.

(A) Within Title 6 Environment, Minnesota Code of Administrative Rules, Part 4 Pollution Control Agency (6 MCAR 4), Rule 6 MCAR 4 section 4.0002, Parts A, B, C, and E—Definitions, Abbreviations, Applicability of Standards, and Circumvention (formerly APC 2) Proposed and Published in Volume 8 of the State of Minnesota STATE REGISTER (8 S.R.) on October 17, 1983, at 8 S.R. 682 and adopted as modified on April 16, 1984, at 8 S.R. 2275.

(B) Rules 6 MCAR section 4.4001 through section 4.4021—Permits (formerly APC 3)—Proposed and Published on December 19, 1983, at 8 S.R. 1419 (text of rule starting at 8 S.R. 1420) and adopted as modified on April 16, 1984, at 8 S.R. 2278.

(C) Rules 6 MCAR section 4.4301 through section 4.4305—Air Emission Facility Permits—Proposed and Published on December 19, 1983, at 8 S.R. 1419 (text of rule starting at 8 S.R. 1470) and adopted as proposed on April 16, 1984, at 8 S.R. 2276.

(D) Rules 6 MCAR section 4.4311 through section 4.4321—Indirect Source Permits (formerly APC 19)—Proposed and Published on December 19, 1983, at 8 S.R. 1419 (text of rule starting at 8 S.R. 1472) and adopted as modified on April 16, 1984, at 8 S.R. 2277.

(25) On July 9, 1986, the State of Minnesota submitted Rules 7005.2520 through 7005.2523, submitted to replace the rule APC–29 in the existing SIP (see paragraph (20)). This submittal also included State permits for three sources, but these permits were withdrawn from USEPA consideration on February 24, 1992. This submittal provides for regulation of particulate matter from grain handling facilities, and was submitted to satisfy a condition on the approval of Minnesota's Part D plan for particulate matter.

(i) Incorporation by reference.

(A) Minnesota Rule 7005.2520, Definitions; Rule 7005.2521, Standards of Performance for Dry Bulk Agricultural Commodity Facilities; Rule 7005.2522, Nuisance; and Rule 7005.2523, Control Requirements Schedule, promulgated by Minnesota on January 16, 1984, and effective at the State level on January 23, 1984.

(ii) Additional Material.

(A) Appendix E to Minnesota's July 9, 1986, submittal, which is a statement signed on April 18, 1986, by Thomas J. Kalitowski, Executive Director, Minnesota Pollution Control Agency, interpreting Rules 7005.2520 through 7005.2523 in the context of actual barge loading practices in Minnesota.

(26) On March 13, 1989, the State of Minnesota requested that EPA revise the referencing of regulations in the SIP to conform to the State's recodification of its regulations. On November 26, 1991, and September 18, 1992, the State submitted an official version of the recodified regulations to be incorporated into the SIP. The recodified regulations are in Chapter 7001 and Chapter 7005 of Minnesota's regulations. Not approved as part of the SIP are recodified versions of regulations which EPA previously did not approve. Therefore, the SIP does not include Rules 7005.1550 through 7005.1610 (National Emission Standards for Hazardous Air Pollutants (NESHAP) for asbestos), Rules 7005.2300 through 7005.2330 (limits for iron and steel plants), Rules 7005.2550 through 7005.2590 (NESHAP for beryllium), Rules 7005.2650 through 7005.2690 (NESHAP for mercury), Rule 7005.0116 (Opacity Standard Adjustment) and Rule 7005.2910 (Performance Test Methods for coal handling facilities). Similarly, the SIP continues to exclude the exemption now in Rule 7001.1210 as applied to small sources subject to new

source performance standards, and the SIP is approved only for ''existing sources'' in the case of Rules 7005.1250 through 7005.1280 (Standards of Performance for Liquid Petroleum Storage Vessels), Rules 7005.1350 through 7005.1410 (Standards of Performance for Sulfuric Acid Plants), Rules 7005.1450 through 7005.1500 (Standards of Performance for Nitric Acid Plants), and Rules 7005.2100 through 7005.2160 (Standards of Performance for Petroleum Refineries). The SIP also does not include changes in the State's Rule 7005.0100 (relating to offsets) that were withdrawn by the State on February 24, 1992, and does not include the new rules 7005.0030 and 7005.0040.

(i) Incorporation by reference.

(A) Minnesota regulations in Chapter 7005 as submitted November 26, 1991, and in Chapter 7001 as submitted September 18, 1992, except for those regulations that EPA has not approved as identified above.

(27) On August 16, 1982, the MPCA submitted an amendment to the St. Cloud Area Air Quality Control Plan for Transportation as a State Implementation Plan revision. This revision to the SIP was adopted by the Board of the Minnesota Pollution Control Agency on July 27, 1982. On August 31, 1989, the Minnesota Pollution Control Agency submitted a revision to the Minnesota State Implementation Plan (SIP) for carbon monoxide deleting the Lake George Interchange roadway improvement project (10th Avenue at First Street South) from its St. Cloud transportation control measures. This revision to the SIP was approved by the Board on June 27, 1989.

(i) Incorporation by reference.

(A) Letter dated August 16, 1982, from Louis J. Breimburst, Executive Director, Minnesota Pollution Control Agency to Valdas V. Adamkus, Regional Administrator, United States Environmental Protection Agency—Region 5 and its enclosed amendment to the Air Quality Plan for Transportation for the St. Cloud Metropolitan Area entitled, ''Staff Resolution,'' measures 1, 4 and 5 adopted by the Minnesota Pollution Control Agency on July 27, 1982.

(B) Letter dated August 31, 1989, from Gerald L. Willet, Commissioner, Minnesota Pollution Control Agency to Valdas V. Adamkus, Regional Administrator, United States Environmental Protection Agency—Region 5.

(28) On November 9, 1992, the State of Minnesota submitted the Small Business Stationary Source Technical and Environmental Compliance Assistance plan. This submittal satisfies the requirements of section 507 of the Clean Air Act, as amended.

(i) Incorporation by reference.

(A) Minnesota Laws Chapter 546, sections 5 through 9 enacted by the Legislature, and signed into Law on April 29, 1992.

(29) On November 26, 1991, August 31, 1992, November 13, 1992, February 3, 1993, April 30, 1993, and October 15, 1993, the State of Minnesota submitted revisions to its State Implementation Plans (SIPs) for particulate matter for the Saint Paul and Rochester areas.

(i) Incorporation by reference.

(A) An administrative order for Ashbach Construction Company, dated August 25, 1992, submitted August 31, 1992, for the facility at University Avenue and Omstead Street.

(B) An administrative order for Commercial Asphalt, Inc., dated August 25, 1992, submitted August 31, 1992, for the facility at Red Rock Road.

(C) An administrative order for Great Lakes Coal & Dock Company dated August 25, 1992, submitted August 31, 1992, for the facility at 1031 Childs Road.

(D) An administrative order for Harvest States Cooperatives dated January 26, 1993, submitted February 3, 1993, for the facility at 935 Childs Road.

(E) An administrative order for LaFarge Corporation dated November 30, 1992, submitted in a letter dated November 13, 1992, for the facility at 2145 Childs Road.

(F) An administrative order for the Metropolitan Waste Control Commission and the Metropolitan Council dated November 30, 1992, submitted in a letter dated November 13, 1992, for the facility at 2400 Childs Road.

(G) An administrative order for North Star Steel Company dated April 22, 1993, submitted April 30, 1993, for the facility at 1678 Red Rock Road.

(H) An administrative order for PM Ag Products, Inc., dated August 25, 1992, submitted August 31, 1992, for the facility at 2225 Childs Road.

(I) An administrative order for Rochester Public Utilities dated November 30, 1992, submitted in a letter dated November 13, 1992, for the facility at 425 Silver Lake Drive.

(J) An amendment to the administrative order for Rochester Public Utilities, dated October 14, 1993, submitted October 15, 1993, for the facility at 425 Silver Lake Drive.

(K) An administrative order for J.L. Shiely Company dated August 25, 1992, submitted August 31, 1992, for the facility at 1177 Childs Road.

(ii) Additional materials.

(A) A letter from Charles Williams to Valdas Adamkus dated November 26, 1991, with attachments.

(B) A letter from Charles Williams to Valdas Adamkus dated August 31, 1992, with attachments.

(C) A letter from Charles Williams to Valdas Adamkus dated November 13, 1992, with attachments.

(D) A letter from Charles Williams to Valdas Adamkus dated February 3, 1993, with attachments.

(E) A letter from Charles Williams to Valdas Adamkus dated April 30, 1993, with attachments.

(F) A letter from Charles Williams to Valdas Adamkus dated October 15, 1993, with attachments.

(30) On June 4, 1992, March 30, 1993, and July 15, 1993, the State of Minnesota submitted revisions to its State Implementation Plans (SIPs) for sulfur dioxide for Air Quality Control Region (AQCR) 131 (excluding the Dakota County Pine Bend area and an area around Ashland Refinery in St. Paul Park).

(i) Incorporation by reference.

(A) An administrative order, received on June 4, 1992, for FMC Corporation and U.S. Navy, located in Fridley, Anoka County, Minnesota. The administrative order became effective on May 27, 1992. Amendment One, which was received on March 30, 1993, became effective on March 5, 1993. Amendment Two, which was received on July 15, 1993, became effective on June 30, 1993.

(B) An administrative order, received on June 4, 1992, for Federal Hoffman, Incorporated, located in Anoka, Anoka County, Minnesota. The administrative order became effective on May 27, 1992. Amendment one, received on July 15, 1993, became effective on June 30, 1993.

(C) An administrative order, received on June 4, 1992, for GAF Building Materials Corporation (Asphalt Roofing Products Manufacturing Facility) located at 50 Lowry Avenue, Minneapolis, Hennepin County, Minnesota. The administrative order became effective on May 27, 1992. Amendment One, received on July 15, 1993, became effective on June 30, 1993.

(D) An administrative order, received on June 4, 1992, for Northern States Power Company–Riverside Generating Plant, located in Minneapolis, Hennepin County, Minnesota. The administrative order became effective on May 27, 1992. Amendment One, received on July 15, 1993, became effective on June 30, 1993.

(E) An administrative order for Minneapolis Energy Center, received on July 15, 1993, Inc.'s Main Plant, Baker Boiler Plant, and the Soo Line Boiler Plant all located in Minneapolis, Hennepin County, Minnesota. The administrative order became effective on June 30, 1993.

(ii) Additional material.

(A) A letter from Charles Williams to Valdas Adamkus dated May 29, 1992, with enclosures providing technical support (e.g., computer modeling) for the revisions to the administrative orders for five facilities.

(B) A letter from Charles Williams to Valdas Adamkus dated March 26, 1993, with enclosures providing technical support for an amendment to the administrative order for FMC Corporation and U.S. Navy.

(C) A letter from Charles Williams to Valdas Adamkus dated July 12, 1993, with enclosures providing technical support for amendments to administrative orders for four facilities and a reissuance of the administrative order to Minneapolis Energy Center, Inc.

(31) In a letter dated October 30, 1992, the MPCA submitted a revision to the Carbon Monoxide State Implementation Plan for Duluth, Minnesota. This revision contains a maintenance plan that the area will use to maintain the CO NAAQS. The maintenance plan contains park and ride lots and an oxygenated fuels program as the contingency measure.

(i) Incorporation by reference.

(A) Letter dated October 30, 1992, from Charles Williams, Commissioner, Minnesota Pollution Control Agency to Valdas Adamkus, Regional Administrator, U.S. Environmental Protection Agency, Region 5 and its enclosures entitled Appendix E.

(ii) Additional information.

(A) Letter dated November 10, 1992, from Charles Williams, Commissioner, Minnesota Pollution Control Agency to Valdas Adamkus, Regional Administrator, U.S. Environmental Protection Agency, Region 5.

(B) Letter dated December 22, 1993, from Charles Williams, Commissioner, Minnesota Pollution Control Agency to Valdas Adamkus, Regional Administrator, U.S. Environmental Protection Agency, Region 5.

(32) In a letter dated October 30, 1992, the MPCA submitted a revision to the Carbon Monoxide State Implementation Plan for Duluth, Minnesota. This revision removes a transportation control measure (TCM) from the State Implementation Plan. The TCM is an increased turning radius at 14th Avenue and 3rd Street East.

(i) Incorporation by reference.

(A) Letter dated October 30, 1992, from Charles Williams, Commissioner, Minnesota Pollution Control Agency to Valdas Adamkus, Regional Administrator, U.S. Environmental Protection Agency, Region 5 and its enclosure entitled Appendix D.

(ii) Additional information.

(A) Letter dated November 10, 1992, from Charles Williams, Commissioner, Minnesota Pollution Control Agency to Valdas Adamkus, Regional Administrator, U.S. Environmental Protection Agency, Region 5.

(33) On August 5, 1992, and August 26, 1993, the State of Minnesota submitted its ''Offset Rules'' as revisions to its State Implementation Plan (SIP) for new source review in nonattainment areas.

(i) Incorporation by reference.

(A) Rules 7005.3020, 7005.3030, and 7005.3040, with amendments effective August 24, 1992.

(B) Amendments to Rule 7005.3040, effective June 28, 1993.

(ii) Additional materials.

(A) A letter from Charles Williams to Valdas Adamkus dated August 5, 1992, with attachments.

(B) A letter from Charles Williams to Valdas Adamkus dated August 26, 1993, with attachments.

(34) On November 9, 1992, the State of Minnesota submitted the Oxygenated Gasoline Program. This submittal satisfies the requirements of section 211(m) of the Clean Air Act, as amended.

(i) Incorporation by reference.

(A) Minnesota Laws Chapter 2509, sections 1 through 31, except for sections 29 (b) and (c), enacted by the Legislature and signed into Law on April 29, 1992.

(ii) Additional material.

(A) Letter dated August 12, 1994, from the Minnesota Pollution Control Agency (MPCA), to the United States Environmental Protection Agency that withdraws the MPCA Board resolution dated October 27, 1992, and any reference to it, from the oxygenated gasoline State Implementation Plan revision request of 1992.

(35) On July 29, 1992, February 11, 1993, and February 25, 1994, the State of Minnesota submitted revisions to its State Implementation Plans (SIPs) for sulfur dioxide for Dakota County Pine Bend area of Air Quality Control Region (AQCR) 131.

(i) Incorporation by reference.

(A) For Continental Nitrogen and Resources Corporation, located in Rosemount, Dakota County, Minnesota:

(*1*) An administrative order, dated and effective July 28, 1992, submitted July 29, 1992.

(*2*) Amendment One to the administrative order, dated and effective February 25, 1994, submitted February 25, 1994.

(B) For Northern States Power Company, Inver Hills Generating Facility, located in Dakota County, Minnesota:

(*1*) An administrative order, dated and effective July 28, 1992, submitted July 29, 1992.

(*2*) Amendment one to the administrative order, dated and effective February 25, 1994, submitted February 25, 1994.

(C) For Koch Refining Company and Koch Sulfuric Acid Unit, located in the

Pine Bend area of Rosemount, Dakota County, Minnesota:

(*1*) An administrative order, identified as Amendment One to Findings and Order by Stipulation, dated and effective March 24, 1992, submitted July 29, 1992.

(*2*) Amendment two to the administrative order, dated and effective January 22, 1993, submitted February 11, 1993.

(*3*) Amendment three to the administrative order, dated and effective February 25, 1994, submitted February 25, 1994.

(ii) Additional material.

(A) A letter from Charles Williams to Valdas Adamkus dated July 29, 1992, with enclosures providing technical support (e.g., computer modeling) for the revisions to the administrative orders for three facilities.

(B) A letter from Charles Williams to Valdas Adamkus dated February 11, 1993, submitting Amendment Two to the administrative order for Koch Refining Company.

(C) A letter from Charles Williams to Valdas Adamkus dated February 25, 1994, with enclosures providing technical support for amendments to administrative orders for three facilities.

(36) On June 22, 1993, and September 13, 1994, the State of Minnesota submitted revisions to its State Implementation Plan for lead for a portion of Dakota County.

(i) Incorporation by reference.

(A) For Gopher Smelting and Refining Company, located in the city of Eagan, Dakota County, Minnesota:

(1) An administrative order, dated, submitted, and effective June 22, 1993.

(2) Amendment One to the administrative order, dated, submitted, and effective, September 13, 1994.

(ii) Additional material.

(A) A letter from Charles W. Williams to Valdas V. Adamkus, dated June 22, 1993, with enclosures providing technical support (e.g., computer modeling) for the revisions to the State Implementation Plan for lead.

(B) A letter from Charles W. Williams to Valdas V. Adamkus, dated September 13, 1994, with enclosures providing technical support for the revised administrative order for Gopher Smelting and Refining Company.

(37) On March 9, 1994, the State of Minnesota submitted a revision to its particulate matter plan for the Saint Paul area, providing substitute limits for an aggregate heater at the J.L. Shiely facility.

(i) Incorporation by reference.

(A) An amendment dated January 12, 1994, amending the administrative order of August 25, 1992, for the J.L. Shiely facility at 1177 Childs Road, Saint Paul.

EDITORIAL NOTE: At 60 FR 21451, May 2, 1995 the following paragraph (c)(37) was added to § 52.1220.

(37) On November 23, 1993, the State of Minnesota submitted updated air permitting rules.

(i) Incorporation by reference.

(A) Rules 7007.0050 through 7007.1850, effective August 10, 1993.

(B) Rules 7001.0020, 7001.0050, 7001.0140, 7001.0180, 7001.0550, 7001.3050, 7002.0005, 7002.0015, and 7005.0100, effective August 10, 1993.

(38) On December 22, 1992 and September 30, 1994, the State of Minnesota submitted revisions to its State Implementation Plans (SIPs) for sulfur dioxide for the St. Paul Park area of Air Quality Control Region (AQCR) 131.

(i) Incorporation by reference.

(A) For Ashland Petroleum Company, located in St. Paul Park, Minnesota:

(1) An administrative order, dated and effective December 15, 1992, submitted December 22, 1992.

(2) Amendment One to the administrative order, dated and effective September 30, 1994, submitted September 30, 1994.

(ii) Additional material.

(A) A letter from Charles Williams to Valdas Adamkus dated December 22, 1992, with enclosures providing technical support (e.g., computer modeling) for the revision to the administrative order for Ashland Petroleum Company.

(B) A letter from Charles Williams to Valdas Adamkus dated September 30, 1994, with enclosures, submitting Amendment One to the administrative order for Ashland Petroleum Company.

(39) [Reserved]

(40) On November 23, 1993, the State of Minnesota requested recodification of the regulations in its State Implementation Plan, requested removal of

various regulations, and submitted recodified regulations containing minor revisions.

(i) Incorporation by reference.

(A) Minnesota regulations in Chapters 7005, 7007, 7009, 7011, 7017, 7019, and 7023, effective October 18, 1993.

(B) Submitted portions of Minnesota Statutes Sections 17.135, 88.01, 88.02, 88.03, 88.16, 88.17, and 88.171, effective 1993.

(41) On December 22, 1994, Minnesota submitted miscellaneous amendments to 11 previously approved administrative orders. In addition, the previously approved administrative order for PM Ag Products (dated August 25, 1992) is revoked.

(i) Incorporation by reference.

(A) Amendments, all effective December 21, 1994, to administrative orders approved in paragraph (c)(29) of this section for: Ashbach Construction Company; Commercial Asphalt, Inc.; Great Lakes Coal & Dock Company; Harvest States Cooperatives; LaFarge Corporation; Metropolitan Council; North Star Steel Company; Rochester Public Utilities; and J.L. Shiely Company.

(B) Amendments, effective December 21, 1994, to the administrative order approved in paragraph (c)(30) of this section for United Defense, LP (formerly FMC/U.S. Navy).

(C) Amendments, effective December 21, 1994, to the administrative order approved in paragraph (c)(35) of this section for Northern States Power-Inver Hills Station.

(42) On September 7, 1994, the State of Minnesota submitted a revision to its State Implementation Plan (SIP) for particulate matter for the Rochester area of Olmsted County, Minnesota.

(i) Incorporation by reference.

(A) Amendment Two to the administrative order for the Silver Lake Plant of Rochester Public Utilities, located in Rochester, Minnesota, dated and effective August 31, 1994, submitted September 7, 1994.

(43) On November 12, 1993, the State of Minnesota submitted a contingency plan to control the emissions of carbon monoxide from mobile sources by use of oxygenated gasoline on a year-round basis. The submittal of this program satisfies the provisions under section 172(c)(9) and 172(b) of the Clean Air Act as amended.

(i) Incorporation by reference.

(A) Laws of Minnesota for 1992, Chapter 575, section 29(b), enacted by the legislature and signed into law on April 29, 1992.

[37 FR 10874, May 31, 1972]

EDITORIAL NOTE: For FEDERAL REGISTER citations affecting § 52.1220, see the List of CFR Sections Affected in the Finding Aids section of this volume.

§ 52.1221 Classification of regions.

The Minnesota plan was evaluated on the basis of the following classifications:

Air quality control region	Pollutant				
	Particulate matter	Sulfur oxides	Nitrogen dioxide	Carbon monoxide	Photochemical oxidants (hydrocarbons)
Central Minnesota Intrastate	II	III	III	III	III
Southeast Minnesota-La Crosse (Wisconsin) Interstate	II	Ia	III	III	III
Duluth (Minnesota)-Superior (Wisconsin) Interstate	I	II	III	III	III
Metropolitan Fargo-Moorhead Interstate	II	III	III	III	III
Minneapolis-St. Paul Intrastate	I	I	III	I	III
Northwest Minnesota Intrastate	II	III	III	III	III
Southwest Minnesota Intrastate	III	III	III	III	III

[37 FR 10874, May 31, 1972, as amended at 39 FR 16346, May 8, 1974]

§ 52.1222 EPA-approved Minnesota State regulations.

The following table identifies the State regulations submitted to and approved by EPA as revisions to the Minnesota State Implementation Plan (SIP). This table is for informational purposes only and does not have any independent regulatory effect. This table also does not include administrative orders that have been approved into the SIP. To determine regulatory requirements for a specific situation consult the plan identified in § 52.1220. To the extent that this table conflicts with § 52.1220, § 52.1220 governs.

TABLE 52.1222.—EPA APPROVED REGULATIONS

Rule description	Minnesota rule numbers	Contents of SIP	Effective date	Relevant ¶s in § 52.1220 [1]
Definitions and Abbreviations.	7005.0100–.0110	Full rules except def'n of NESHAP.	10/18/93	b,c20,c40.
Air Emission Permits	7007.0050–.1850	Full rules	8/10/93	b,c3,c5, c24,c26,c39.
Offsets	7007.4000–.4030	Full rules	10/18/93	c33.
Ambient Air Quality Standards.	7009.0010–.0080	All except 7009.0030 and 7009.0040.	10/18/93	b,c3,c26.
Air Pollution Episodes	7009.1000–.1110	Full rules	10/18/93	c1,c21.
Applicability	7011.0010, .0020	Full rules	10/18/93	b,c20
Opacity	7011.0100–.0120	All except 7011.0120	10/18/93	b,c3,c20.
Fugitive Particulate	7011.0150	Full rules	10/18/93	b.
Indirect Heating Equipment.	7011.0500–.0550	Full rules	10/18/93	b,c3,c20,c21
Direct Heating Equipment	7011.0600–.0620	Full rules	10/18/93	c20,c21.
Industrial Process Equipment.	7011.0700–.0735	Full rules	10/18/93	b,c20
Portland Cement Plants	7011.0800–.0825	All except 7011.0810	10/18/93	c20,c40.
Asphalt Concrete Plants	7011.0900–.0920	All except 7011.0910	10/18/93	c20,c40.
Grain Elevators	7011.1000–.1015	All except 7011.1005(2)	10/18/93	c20,c25,c40.
Coal Handling Facilities	7011.1100–.1140	All except 7011.1130	10/18/93	c21.
Incinerators	7011.1201–.1207	All rules for "existing sources" [2].	10/18/93	b,c20,c40.
Sewage Sludge Incinerators.	7011.1300–.1325	All rules for "existing sources".	10/18/93	c20,c40
Petroleum Refineries	7011.1400–.1430	All rules for "existing sources".	10/18/93	c20,c21.
Liquid Petroleum and VOC Storage Vessels.	7011.1500–.1515	All rules for "existing sources".	10/18/93	b,c21.
Sulfuric Acid Plants	7011.1600–.1630	All except 7011.1610	10/18/93	b,c3,c21,c40
Nitric Acid Plants	7011.1700–.1725	All except 7011.1710	10/18/93	b,c3,c21,c40.
Inorganic Fibrous Materials.	7011.2100–.2105	All rules	10/18/93	c20.
Stationary Internal Combustion Engine.	7011.2300	Entire rule	10/18/93	b,c21.
CEMS	7017.1000	Entire Rule	10/18/93	c20.
Performance Tests	7017.2000	Entire Rule	10/18/93	c20.
Notifications	7019.1000	Entire Rule	10/18/93	c20.
Reports	7019.2000	Entire Rule	10/18/93	c20.
Emission Inventory	7019.3000, .3010	All rules	10/18/93	c20,c40.
Motor Vehicles	7023.0100–.0120	All rules	10/18/93	b,c21.
Open Burning	Portions of Chapter 17 and 88 of MN Statutes.	All submitted portions of Sections 17.135, 88.01, 88.02, 88.03, 88.16, 88.17, and 88.171.	1993	b,c21,c26, c40.

[1] Recodifications affect essentially all rules but are shown only for substantively revised rules.
[2] "Existing" sources are sources other than those subject to a new source performance standard.

[60 FR 27413, May 24, 1995]

§ 52.1223 Approval status.

With the exceptions set forth in this subpart, the Administrator approves Minnesota's plans for the attainment and maintenance of the national standards under section 110 of the Clean Air Act. Furthermore, the Administrator finds the plan satisfies all requirements of Part D, Title 1, of the Clean Air Act as amended in 1977, except as noted below.

[45 FR 40581, June 16, 1980]

§ 52.1224 General requirements.

(a) The requirements of § 51.116(c) of this chapter are not met since the plan does not provide for public availability of emission data.

(b) *Regulation for public availability of emission data.* (1) Any person who cannot obtain emission data from the Agency responsible for making emission data available to the public, as specified in the applicable plan, concerning emissions from any source subject to emission limitations which are part of the approved plan may request that the appropriate Regional Administrator obtain and make public such data. Within 30 days after receipt of any such written request, the Regional Administrator shall require the owner or operator of any such source to submit information within 30 days on the nature and amounts of emissions from such source and any other information as may be deemed necessary by the Regional Administrator to determine whether such source is in compliance with applicable emission limitations or other control measures that are part of the applicable plan.

(2) Commencing after the initial notification by the Regional Administrator pursuant to paragraph (b)(1) of this section, the owner or operator of the source shall maintain records of the nature and amounts of emissions from such source and any other information as may be deemed necessary by the Regional Administrator to determine whether such source is in compliance with applicable emission limitations or other control measures that are part of the plan. The information recorded shall be summarized and reported to the Regional Administrator, on forms furnished by the Regional Administrator, and shall be submitted within 45 days after the end of the reporting period. Reporting periods are January 1 to July 30 and July 1 to December 31.

(3) Information recorded by the owner or operator and copies of this summarizing report submitted to the Regional Administrator shall be retained by the owner or operator for 2 years after the date on which the pertinent report is submitted.

(4) Emission data obtained from owners or operators of stationary sources will be correlated with applicable emission limitations and other control measures that are part of the applicable plan and will be available at the appropriate regional office and at other locations in the state designated by the Regional Administrator.

(5) Authority of the Regional Administrator to make available information and data was delegated to the Minnesota Pollution Control Agency effective October 6, 1977.

[37 FR 10874, May 31, 1972, as amended at 40 FR 55330, Nov. 28, 1975; 43 FR 10, Jan. 3, 1978; 51 FR 40676, Nov. 7, 1986]

§ 52.1225 Review of new sources and modifications.

(a) Part D—Approval. The State of Minnesota has satisfied the requirements of sections 173 and 189(a)(1)(A) for permitting of major new sources and modifications in nonattainment areas.

(b) [Reserved]

(c) [Reserved]

(d) [Reserved]

(e) The State of Minnesota has committed to conform to the Stack Height Regulations, as set forth in 40 CFR part 51. In a January 14, 1987, letter to David Kee, USEPA, Thomas J. Kalitowski, Executive Director, Minnesota Pollution Control Agency, stated:

> Minnesota does not currently have a stack height rule, nor do we intend to adopt such a rule. Instead, we will conform with the Stack Height Regulations as set forth in the July 8, 1985, FEDERAL REGISTER in issuing permits for new or modified sources. In cases where that rule is not clear, we will contact USEPA Region V and conform to the current federal interpretation of the item in question.

[53 FR 17037, May 13, 1988, as amended at 59 FR 21941, Apr. 28, 1994; 60 FR 21451, May 2, 1995]

§§ 52.1226—52.1229 [Reserved]

§ 52.1230 Control strategy and rules: Particulates.

(a) *Part D.* (1) *Approval.* The State of Minnesota has satisfied the requirements of sections 189(a)(1)(B) and 189(a)(1)(C) and paragraphs 1, 2, 3, 4, 6, 7, 8, and 9 of section 172(c) for the Saint Paul and Rochester areas. The Administrator has determined pursuant to

section 189(e) that secondary particulate matter formed from particulate matter precursors does not contribute significantly to exceedances of the NAAQS.

(2) *No action*. USEPA takes no action on the alternative test method provision of Rule 7005.2910.

(b) Approval—On May 31, 1988, the State of Minnesota submitted a committal SIP for particulate matter with an aerodynamic diameter equal to or less than 10 micrometers (PM_{10}) for Minnesota's Group II areas. The Group II areas of concern are in Minneapolis, Hennepin County; Duluth and Iron Range, St. Louis County; Iron Range, Itasca County; Two Harbors, Lake County; and St. Cloud, Stearns County. The committal SIP contains all the requirements identified in the July 1, 1987, promulgation of the SIP requirements for PM_{10} at 52 FR 24681.

[47 FR 19522, May 6, 1982, as amended at 47 FR 32118, July 26, 1982; 55 FR 21022, May 22, 1990; 57 FR 46308, Oct. 8, 1992; 59 FR 7222, Feb. 15, 1994]

§§ 52.1231—52.1232 [Reserved]

§ 52.1233 Operating permits.

Emission limitations and related provisions which are established in Minnesota permits as federally enforceable conditions in accordance with Chapter 7007 rules shall be enforceable by USEPA. USEPA reserves the right to deem permit conditions not federally enforceable. Such a determination will be made according to appropriate procedures, and be based upon the permit, permit approval procedures or permit requirements which do not conform with the permit program requirements or the requirements of USEPA's underlying regulations.

[60 FR 21451, May 2, 1995]

§ 52.1234 Significant deterioration of air quality.

(a) The requirements of sections 160 through 165 of the Clean Air Act are not met, since the plan does not include approvable procedures for preventing the significant deterioration of air quality.

(b) Regulations for preventing significant deterioration of air quality. The provisions of § 52.21(b) through (w) are hereby incorporated and made a part of the applicable state plan for the State of Minnesota.

(c) All applications and other information required pursuant to § 52.21 from sources located in the State of Minnesota shall be submitted to the Minnesota Pollution Control Agency, Division of Air Quality, 520 Lafayette Road, St. Paul, Minnesota 55155.

[45 FR 52741, Aug. 7, 1980, as amended at 53 FR 18985, May 26, 1988]

§ 52.1235 [Reserved]

§ 52.1236 Visibility protection.

(a) The requirements of section 169A of the Clean Air Act are not met, because the plan does not include approvable procedures for protection of visibility in mandatory Class I Federal areas.

(b) Regulation for visibility monitoring and new source review. The provisions of §§ 52.26 and 52.28 are hereby incorporated and made a part of the applicable plan for the State of Minnesota.

(c) *Long-term strategy*. The provisions of § 52.29 are hereby incorporated and made part of the applicable plan for the State of Minnesota.

[50 FR 28553, July 12, 1985, as amended at 52 FR 45137, Nov. 24, 1987]

§ 52.1237 Control strategy: Carbon monoxide.

(a) The base year carbon monoxide emission inventory requirement of section 187(a)(1) of the Clean Air Act, as amended in 1990, has been satisfied for the following areas: Duluth Metropolitan Area and Minneapolis-St. Paul Metropolitan Area.

[59 FR 47807, Sept. 19, 1994]

Subpart Z—Mississippi

§ 52.1270 Identification of plan.

(a) Title of plan: ''Air Implementation Plan for the State of Mississippi.''

(b) The plan was officially submitted on February 4, 1972.

(c) The plan revisions listed below were submitted on the dates specified.

(1) A change in the Opacity Regulation, section 2, Appendix C; addition of testing methods, section 8, Appendix C;

addition of Permit System, Appendix G and deletion of SO_2 regulation, section 4, Appendix C submitted on May 4, 1972, by the Mississippi Air and Water Pollution Control Commission.

(2) Telegram concerning adoption of plan changes submitted on May 15, 1972, by the Mississippi Air and Water Pollution Control Commission.

(3) House Bill number 680 submitted on May 17, 1972, by the Governor.

(4) Compliance schedule revisions submitted on March 6, 1973, by the Mississippi Air and Water Pollution Control Commission.

(5) Compliance schedule revisions submitted on August 9, 1973, by the Mississippi Air and Water Pollution Control Commission.

(6) AQMA identification material submitted on March 14, 1974, by the Mississippi Air and Water Pollution Control Commission.

(7) Compliance schedules submitted on January 20, 1975, by the Mississippi Air and Water Pollution Control Commission.

(8) Revised regulations for the incineration of cotton ginning waste, submitted on August 30 and November 14, 1977, by the Mississippi Air and Water Pollution Control Commission.

(9) Revised regulations for open burning, submitted on October 31, 1977, by the Mississippi Air and Water Pollution Control Commission.

(10) Revised permit regulations, submitted on March 16, 1978, by the Mississippi Air and Water Pollution Control Commission.

(11) Implementation plan revisions for the Jones County, Mississippi total suspended particulate nonattainment area, submitted on March 13, 1979, by the Mississippi Air and Water Pollution Control Commission.

(12) Revised regulation APC S–1, section 4.2(b), for emissions of sulfur oxides from the incineration of gas streams containing hydrogen sulfide, submitted on July 3, 1978; and permits containing limits on sulfur oxide emissions from individual flares, submitted on September 13, 1979, by the Mississippi Bureau of Pollution Control (see FEDERAL REGISTER of July 10, 1980).

(13) Air Quality Surveillance Plan, submitted on June 1, 1982, by the Mississippi Department of Natural Resources.

(14) Incorporation by reference of NSPS and NESHAPS (revised definition of ''person'', addition of paragraph 3 to section 6 of APC–S–1, addition of section 8 to APC–S–1, and addition of subparagraph 2.6.3 to APC–S–2), submitted on September 8, 1981, by the Mississippi Bureau of Pollution Control.

(15) Revised SO_2 limit for United Cement Company's Artesia kiln, and NSPS enabling regulation submitted on December 10, 1982, and adoption of six categories of NSPS submitted on December 23, 1982, by the Mississippi Bureau of Pollution Control.

(16) Revision to ''Air Quality Regulations'' and amendment to ''Permit Regulations for the Construction and/or Operation of Air Emission Equipment'' were submitted by the Mississippi Department of Natural Resources on May 11, 1984.

(i) Incorporation by reference. (A) May 11, 1984 letter from the Mississippi Department of Natural Resources to EPA amending Regulations APC–S–1 and APC–S–2.

(B) A revision adopted on May 9, 1984, adds Paragraph 3 to Mississippi's ''Air Quality Regulations,'' APC–S–1, Section 1 ''General.''

(C) A revision adopted on May 9, 1984, amends Mississippi's ''Permit Regulations for the Construction and/or Operation of Air Emission Equipment,'' APC–S–2, Paragraph 2.6.2.1.

(ii) Other materials—none.

(17) Implementation plan for lead, submitted on May 9, 1984, by the Mississippi Department of Natural Resources.

(18) Part D and other new source review provisions were submitted by the Mississippi Department of Natural Resources on November 25, 1981.

(i) Incorporation by reference.

(A) Letter dated November 25, 1981 from Mississippi Department of Natural Resources, and Mississippi Regulation APC–S–2, section 2.4.8, ''Additional Requirements for a Construction Permit for a New Facility Significantly Impacting an area in which a

National Ambient Air Quality Standard is being Exceeded or will be Exceeded'', was adopted by the Mississippi Commission on Natural Resources on November 12, 1981. Subsection 2.4.8.1, 2.4.8.3, and 2.4.8.4 are incorporated by reference.

(ii) Additional material.

(A) Letter to Jack Ravan from Charlie E. Blalock, dated November 25, 1985, interpreting Mississippi regulations with respect to source coverage and stack heights.

(19) Stack height regulations were submitted to EPA on April 1, 1986 by the Mississippi Department of Natural Resources.

(i) Incorporation by reference.

(A) Mississippi Department of Natural Resources, Bureau of Pollution Control, Appendix C–5, Air Emission Regulations, Regulation APC–S–1, Section 9, which was adopted on March 26, 1986.

(B) Letter of April 1, 1986 from Mississippi Department of National Resources.

(ii) Additional material—none.

(20) PM_{10} revisions for the State of Mississippi which were submitted by the Mississippi Department of Natural Resources on July 26, 1988.

(i) Incorporation by reference.

(A) Revised regulations which became State-effective on June 3, 1988:

1. Air Emission Regulations, APC–S–1, Section 2, (16)–(27).

2. Permit Regulations . . ., APC–S–2, 2.4.8.1(a), (b), (e), (f) and 2.4.8.3.

3. Regulations for the Prevention of Air Pollution Emergency Episodes, APC–S–3, Section 3 and Section 5.

(ii) Additional material.

(A) Letter of July 26, 1988, from the Mississippi Department of Natural Resources, submitting the Mississippi SIP revisions.

Revised SIP narrative:

(B) Section 1.15 Notification of Public Hearing for Plan Revision for PM_{10} Requirements

(C) Section 3.6 Legal Authority for the PM_{10} Plan Revision

(D) Section 5.5 Control Strategy for the Development of Emission Regulations for PM_{10}

(E) Section 6.9 Control Regulations for PM_{10} Revisions

(F) Chapter 9.0 Air Monitoring

(G) Section 14.1.4 Health Effects of the PM_{10} Plan Revisions

(H) Section 14.3.4 Economic Effects of the PM_{10} Plan Revisions

(I) Section 14.5.4 Social Effects of the PM_{10} Plan Revisions

(J) Section 14.6.4 Air Quality Effects of the PM_{10} Revisions

(21) Revisions to APC–S–5 of the Mississippi Air Pollution Control Act which were submitted on July 16, 1990.

(i) Incorporation by reference. (A) Regulation APC–S–5, Regulations for the Prevention of Significant Deterioration of Air Quality, effective on July 29, 1990.

(ii) Other material. (A) Letter of July 16, 1990, from the Mississippi Department of Environmental Quality.

(22) Prevention of Significant Deterioration regulation revision to include Nitrogen Dioxide increments for the State of Mississippi which was submitted by the Mississippi Department of Environmental Quality on June 14, 1991.

(i) Incorporation by reference.

(A) Revision to Regulation APC–S–5, Paragraph 1, Regulations for the Prevention of Significant Deterioration of Air Quality, which became State effective on May 28, 1991.

(ii) Other material.

(A) Letter of June 14, 1991 from the Mississippi Department of Environmental Quality.

(B) Letter of March 8, 1991, from the Mississippi Department of Environmental Quality regarding minimum program elements.

(23) The Mississippi Department of Environmental Quality has submitted revisions to chapter 15 of the Mississippi Statute on November 19, 1992. These revision address the requirements of section 507 of title V of the CAA and establish the Small Business Stationary Source Technical and Environmental Assistance Program (PROGRAM).

(i) Incorporation by reference.

(A) Mississippi SIP chapter 15 effective December 19, 1992.

(ii) Additional information.

(A) January 20, 1994, letter of clarification regarding the appointment of the CAP.

(24) The Mississippi Department of Environmental Quality submitted revisions on June 14, 1991, to ''Permit Regulations for the construction and/or Operation of Air Emissions Equipment'' of Regulation APC-S092. These revisions incorporate ''moderate stationary sources'' into the existing regulations which are required in 40 CFR part 51, subpart I.

(i) Incorporation by reference.

(A) Mississippi Commission on Environmental Quality Permit Regulations for the Construction and/or Operation of Air Emissions Equipment, Regulation APC-S092, effective on May 28, 1991.

(B) Letter of June 21, 1994, from the Mississippi Office of the Attorney General to the Environmental Protection Agency.

(ii) Additional material. None.

(25) Revisions to minor source operating permit rules submitted by the Mississippi Department of Environmental Quality on January 26, 1994.

(i) Incorporation by reference.

(A) Regulation APC–S–2, effective January 9, 1994.

(ii) Other material. None.

(26) The Mississippi Department of Environmental Quality has submitted revision to Regulation APC-S–5. The purpose of this regulation is to adopt by reference Federal regulations for the prevention of significant deterioration of air quality as required by 40 CFR 51.166 and 52.21.

(i) Incorporation by reference.

(A) Regulations of the prevention of significant deterioration of air quality—Regulation APC–S–5 effective January 9, 1994.

(ii) Additional information—None.

(27) Amendments to Regulation APC–S–1 ''Air Emission Regulations for the Prevention, Abatement, and Control of Air Contaminants'' to be consistent with federal regulations as specified in 40 CFR Part 257.

(i) Incorporation by reference. Regulation APC–S–1 ''Air Emission Regulations for the Prevention, Abatement, and Control of Air Contaminants'' effective January 9, 1994, except SECTION 8. PROVISIONS FOR HAZARDOUS AIR POLLUTANTS.

(ii) Additional Material. None.

[37 FR 10875, May 31, 1972]

EDITORIAL NOTE: For FEDERAL REGISTER citations affecting § 52.1270, see the List of CFR Sections Affected in the Finding Aids section of this volume.

§ 52.1271 Classification of regions.

The Mississippi plan was evaluated on the basis of the following classifications:

Air quality control region	Pollutant				
	Particulate matter	Sulfur oxides	Nitrogen dioxide	Carbon monoxide	Photochemical oxidants (hydrocarbons)
Mobile (Alabama)-Pensacola-Panama City (Florida)-Gulfport (Mississippi) Interstate	I	I	III	III	I
Metropolitan Memphis Interstate	I	III	III	III	I
Mississippi Delta Intrastate	III	III	III	III	III
Northeast Mississippi Intrastate	II	III	III	III	III

[37 FR 10875, May 31, 1972, as amended at 39 FR 16346, May 8, 1974]

§ 52.1272 Approval status.

With the exceptions set forth in this subpart, the Administrator approves Mississippi's plan for the attainment and maintenance of national standards under section 110 of the Clean Air Act. Furthermore, the Administrator finds the plans satisfy all requirements or Part D, Title I, of the Clean Air Act as amended in 1977.

[45 FR 2032, Jan. 10, 1980]

§ 52.1273 [Reserved]

§ 52.1275 Legal authority.

(a) The requirements of § 51.230(d) of this chapter are not met since statutory authority to prevent construction, modification, or operation of a facility, building, structure, or installation, or combination thereof, which indirectly results or may result in emissions of any air pollutant at any location which will prevent the maintenance of a national air quality standard is not adequate.

(b) The requirements of § 51.230(f) of this chapter are not met, since section 7106–117 of the Mississippi Code could, in some circumstances, prohibit the disclosure of emission data to the public. Therefore, section 7106–117 is disapproved.

[39 FR 7282, Feb. 25, 1974, as amended at 39 FR 34536, Sept. 26, 1974; 51 FR 40676, Nov. 7, 1986]

§ 52.1276 [Reserved]

§ 52.1277 General requirements.

(a) The requirements of § 51.116(c) of this chapter are not met, since the legal authority to provide public availability of emission data is inadequate.

(b) *Regulation for public availability of emission data.* (1) Any person who cannot obtain emission data from the Agency responsible for making emission data available to the public, as specified in the applicable plan, concerning emissions from any source subject to emission limitations which are part of the approved plan may request that the appropriate Regional Administrator obtain and make public such data. Within 30 days after receipt of any such written request, the Regional Administrator shall require the owner or operator of any such source to submit information within 30 days on the nature and amounts of emissions from such source and any other information as may be deemed necessary by the Regional Administrator to determine whether such source is in compliance with applicable emission limitations or other control measures that are part of the applicable plan.

(2) Commencing after the initial notification by the Regional Administrator pursuant to paragraph (b)(1) of this section, the owner or operator of the source shall maintain records of the nature and amounts of emissions from such source and any other information as may be deemed necessary by the Regional Administrator to determine whether such source is in compliance with applicable emission limitations or other control measures that are part of the plan. The information recorded shall be summarized and reported to the Regional Administrator, on forms furnished by the Regional Administrator, and shall be submitted within 45 days after the end of the reporting period. Reporting periods are January 1 to June 30 and July 1 to December 31.

(3) Information recorded by the owner or operator and copies of this summarizing report submitted to the Regional Administrator shall be retained by the owner or operator for 2 years after the date on which the pertinent report is submitted.

(4) Emission data obtained from owners or operators of stationary sources will be correlated with applicable emission limitations and other control measures that are part of the applicable plan and will be available at the appropriate regional office and at other locations in the state designated by the Regional Administrator.

[39 FR 34536, Sept. 26, 1974, as amended at 40 FR 55330, Nov. 28, 1975; 51 FR 40676, Nov. 7, 1986]

§ 52.1278 Control strategy: Sulfur oxides and particulate matter.

In a letter dated January 30, 1987, the Mississippi Department of Natural Resources certified that no emission limits in the State's plan are based on dispersion techniques not permitted by EPA's stack height rules. This certification does not apply to: Mississippi Power-Daniel; South Mississippi Electric Power, Hattiesburg-Morrow; E.I. Dupont, Delisle Boilers 1 & 2; and International Paper, Vicksburg.

[54 FR 25456, June 15, 1989]

§ 52.1279 [Reserved]

§ 52.1280 Significant deterioration of air quality.

(a) All applications and other information required pursuant to § 52.21 of this part from sources located or to be located in the State of Mississippi shall be submitted to the Bureau of Pollution Control, Department of Natural Resources, P.O. Box 10385, Jackson, Mississippi 39209.

[43 FR 26410, June 19, 1978, as amended at 45 FR 34272, May 22, 1980; 45 FR 52741, Aug. 7, 1980; 55 FR 41692, Oct. 15, 1990]

Subpart AA—Missouri

§ 52.1320 Identification of plan.

(a) Title of plans:

(1) ''State of Missouri, Kansas City and Out-State Air Quality Control Regions Implementation Plan.''

(2) ''Implementation Plan for the Missouri Portion of the St. Louis Interstate Air Quality Control Region.''

(b) The plans were officially submitted on January 24, 1972.

(c) The plan revisions listed below were submitted on the dates specified.

(1) Budget and manpower projections were submitted by the State Air Conservation Commission (ACC) on February 28, 1972. (Non-regulatory)

(2) A memorandum from the State Air Conservation Commission concerning the effects of adopting Appendix B to NO_2 emissions in the St. Louis area was submitted on March 27, 1972. (Non-regulatory)

(3) The determination of the CO air quality data base on the St. Louis area was submitted on May 2, 1972, by the Air Conservation Commission. (Non-regulatory)

(4) The emergency episode operations/communications manual for the Kansas City area was submitted on May 11, 1972, by the State Air Conservation Commission. (Non-regulatory)

(5) Amendments to the Air Conservation Law, Chapter 203, and plans for air monitoring for outstate Missouri were submitted July 12, 1972, by the Air Conservation Commission.

(6) The following amendments to the St. Louis and Kansas City outstate plans were submitted August 8, 1972, by the State ACC: Air Conservation Law, Chapter 203; Kansas City Ordinance, Chapter 18; Regulations XVIII, XX, XXVI (St. Louis); Regulations X, XII, XVII (Kansas City) and Regulations S–11, S–X111 and S–X11 (outstate).

(7) Letters discussing transportation control strategy for Kansas City Interstate AQCR submitted by the State ACC on May 11 and 21, 1973. (Non-regulatory)

(8) Alert plan for St. Louis County and outstate Missouri was submitted on May 24, 1973, by the ACC. (Regulatory)

(9) Copy of the State's analysis of ambient air quality in the Missouri portion of the Metropolitan Kansas City Interstate Air Quality Control Region and recommendation that the area not be designated as an Air Quality Maintenance Area submitted by the Missouri Air Conservation Commission on April 11, 1974. (Non-regulatory)

(10) Copy of the State's analysis of the Missouri portion of the Metropolitan St. Louis Interstate Standard Metropolitan Statistical Area (SMSA), the Columbia SMSA and the Springfield SMSA and recommendations for the designation of Air Quality Maintenance Areas submitted by the Missouri Air Conservation Commission on May 6, 1974. (Non-regulatory)

(11) Compliance Schedules were submitted by the Missouri Air Conservation Commission on June 3 and October 1, 1976.

(12) Compliance Schedules were submitted by the Missouri Air Conservation Commission on November 23, 1976.

(13) On August 28, 1978, the following revisions were submitted by the Missouri Department of Natural Resources:

(i) The recodification of Missouri regulations of July 1, 1976, now contained in Title 10, Division 10 of the Code of State Regulations.

(ii) Title 10, Division 10, Chapter 6 of the Code of State Regulations which contains air quality standards, definitions, and reference methods.

(iii) Missouri Rule 10 CSR 10–2.200; Rule 10 CSR 10–3.150; and Rule 10 CSR 10–4.190 pertaining to control of SO_2 from indirect heating sources.

(iv) Missouri Rule 10 CSR 10–2.030; Rule 10 CSR 10–3.050; Rule 10 CSR 10–

4.030; and 10 CSR 10–5.050 exempting certain process sources from the process weight regulations for particulate matter.

(v) Missouri Rule 10 CSR 10–2.190; Rule 10 CSR 10–3.140; Rule 10 CSR 10–4.180; and Rule 10 CSR 10–5.280 which contain the ''Standards of Performance for New Stationary Sources,'' found at 40 CFR part 60 as in effect on January 18, 1975.

(vi) Missouri Rule 10 CSR 10–2.060; Rule 10 CSR 10–3.080; Rule 10 CSR 10–4.060; and Rule 10 CSR 10–5.090 which require continuous opacity monitors for certain sources.

(vii) Missouri Rule 10 CSR 10–5.140 for determining settlable acid and alkaline mists is rescinded.

(viii) The EPA is taking no action on Rule 10 CSR 10–5.100; 10 CSR 10–2.050, and 10 CSR 10–3.070 which limit fugitive particulate emissions from the handling, transporting and storage of materials in the State of Missouri.

(14) On March 12, 1979, the Missouri Department of Natural Resources submitted Rule 10 CSR 10–3.100 and Rule 10 CSR 10–5.150 establishing revised SO_2 emission limits for primary lead smelters.

(15) On March 1, 1979, the Missouri Department of Natural Resources submitted a revision of regulation 10 CSR 10–5.110 revising the allowable emission rates of sulfur dioxide from Union Electric's Sioux and Labadie power plants.

(16) On July 2, 1979, the State of Missouri submitted a plan to attain the National Ambient Air Quality Standards for the Kansas City and St. Louis areas of the state designated nonattainment under section 107 of the Clean Air Act, as amended in 1977. Included in the plan are the following approved regulations as amended, in part, in subsequent submittals:

(i) Rule 10 CSR 10–2.210 and 10 CSR 10–5.300 Control of Emissions from Solvent Metal Cleaning are approved as RACT;

(ii) Rule 10 CSR 10–2.220 and 10 CSR 10–5.310 Liquified Cutback Asphalt Paving Restriated are approved as RACT;

(iii) Rule 10 CSR 10–5.220 Control of Petroleum Liquid Storage, Loading and Transfer (St. Louis) is approved as RACT.

(iv) Rule 10 CSR 10–2.260 Control of Petroleum Liquid Storage, Loading and Transfer (Kansas City) is approved as RACT;

(v) Rule 10 CSR 10–5.030 Maximum Allowable Emission of Particulate Matter from Fuel Burning Equipment Used for Indirect Heating is approved as RACT;

(vi) Rule 10 CSR 10–5.090 Restriction of Emission of Visible Air Contaminants is approved as RACT;

(vii) Rule 10 CSR 10–5.290 More Restrictive Emission Limitations for Sulfur Dioxide and Particulate Matter in South St. Louis is approved as RACT;

(viii) Rule 10 CSR 10–2.040 Maximum Allowable Emission of Particulate Matter from Fuel Burning Equipment Used for Indirect Heating is approved as RACT;

(ix) Rule 10 CSR 10–2.240 Restriction of Emissions of Volatile Organic Compounds from Petroleum Refinery Sources is approved as RACT;

(x) Rule 10 CSR 10–2.250 Control of Volatile Leaks from Petroleum Refinery Equipment is approved as RACT; and

(xi) Rule 10 CSR 10–2.230 and 10 CSR 10–5.330 Control of Emissions from Industrial Surface Coating Operations is approved as RACT.

(17) On July 2, 1979, the Missouri Department of Natural Resources submitted variances (compliance schedules) for Union Electric Company's Labadie power plant, River Cement Company, and Monsanto Company's Queeny plant. The compliance schedules require these sources to comply with revised Rule 10 CSR 10–5.090. In addition, the Labadie power plant is required to come into compliance with Rule 10 CSR 10–5.030.

(18) On April 7, 1980 the State of Missouri submitted plan revisions for the review and permitting of sources of air pollutant emissions in nonattainment areas. Included in the plan are Missouri regulations 10 CSR 10–6.020, Definitions, and 10 CFR 10–6.060, Permits Required, as amended, in part, in subsequent submittals, which are approved as meeting the requirements of sections 172(b)(6), 172(b)(11)(A) and 173.

(19) On July 2, 1979, the Missouri Department of Natural Resources submitted the variance for the University of Missouri power plant.

(20) On March 11, 1977 the Missouri Department of Natural Resources submitted a variance for Noranda Aluminum.

(21) On June 25, 1979 the Missouri Department of Natural Resources submitted a variance for Associated Electric Cooperative in New Madrid.

(22) On April 25, 1979, the Missouri Department of Natural Resources submitted the variance for the Union Electric Company's Meramec power plant.

(23) Revisions to Rule 10 CSR 10–2.260 Control of Petroleum Liquid Storage, Loading and Transfer (Kansas City), submitted on September 5, 1980, amending the vapor pressure limit in Section 2(A) and amending the limit on gasoline loading in Section 3(B)(1), are approved as RACT.

(24) A schedule for an inspection and maintenance program in St. Louis and a commitment by the East-West Gateway Coordinating Council regarding difficult transportation control measures, submitted on September 9, 1980.

(25) On September 5, 1980, the State of Missouri submitted new regulations and amendments to existing regulations to control emissions of volatile organic compounds in the St. Louis and Kansas City ozone nonattainment areas. Included in the plan revision are the following approved regulations as amended, in part, in subsequent submittals:

(i) Amendments to Rule 10 CSR 10–2.230 and to Rule 10 CSR 10–5.330, Control of Emissions from Industrial Surface Coating Operations, are approved as RACT;

(ii) Amendments to Rule 10 CSR 10–2.260 and to Rule 10 CSR 10–5.220, Control of Petroleum Liquid Storage, Loading and Transfer, are approved as RACT;

(iii) Amendments to Rule 10 CSR 10–6.020, Definitions, and to Rule 10 CSR 10–6.030, Sampling Methods for Air Pollution Sources, and to Rule 10 CSR 10–6.040, Reference Methods, are approved as RACT;

(iv) Rule 10 CSR 10–2.280 and Rule 10 CSR 10–5.320, Control of Emissions from Perchloroethylene Dry Cleaning Installations, are approved as RACT;

(v) Rule 10 CSR 10–2.290, Control of Emissions from Rotogravure and Flexographic Printing Facilities, is approved as RACT;

(vi) Rule 10 CSR 10–5.350, Control of Emissions from the Manufacture of Synthesized Pharmaceutical Products, is approved as RACT;

(vii) Rule 10 CSR 10–5.340, Control of Emissions from Rotogravure and Flexographic Printing Facilities is approved as RACT.

(26) On September 2, 1980, the Missouri Department of Natural Resources submitted the State Implementation Plan for Lead. On February 11 and 13, 1981, the Missouri Department of Natural Resources submitted two letters containing additional information concerning the State Implementation Plan for Lead.

(27) On September 5, 1980, the state of Missouri submitted a plan revision which involved provisions for start-up, shutdown, and malfunction conditions. Included in the plan are new Missouri Rule 10 CSR 10–6.050, Start-up Shutdown, and MalfunctionConditions; and revisions to Rule 10 CSR 10–6.020, Defintions and Amended Start-up, Shutdown and Malfunction Provisions in Rules 10 CSR 10–2.030, 10–3.050, 10–3.060, 10–3.080, 10–4.030, 10–4.040, and 10–5.050.

(28) Revisions to Rule 10 CSR 10–6.060 Permits Required, submitted on April 7, 1981.

(29) A revision to Rule 10 CSR 10–5.220 Control of Petroleum Liquid Storage, Loading and Transfer (St. Louis), submitted on April 14, 1981, amending the emission limit in Section 3, is approved as RACT.

(30) A report on the recommended type of I/M program, stringency factor, vehicle test mix, and program resources and justification, submitted on December 16, 1980, is approved as meeting the applicable condition on the SIP. No action is being taken with respect to the approvability of the specific recommendation sin the report.

(31) A report from the East-West Gateway Coordinating Council outlining commitments to transportation control measures, an analysis of those measures, and the results of the carbon

monoxide dispersion modeling, submitted on February 12 and April 28,1981, is approved as meeting the applicable condition on the SIP.

(32) A variance from Missouri Rule 10 CSR 10–3.050 Restriction of Emission of Particulate Matter From Industrial Processes, for St. Joe Minerals Corporation, Pea Ridge Iron Ore facility, was submitted by the Missouri Department of Natural Resources on May 6, 1981 with supplementary information submitted on June 22 and July 28, 1981.

(33) On September 5, 1980, the Missouri Department of Natural Resources submitted a revision of Missouri Rule 10 CSR 10–3.050, Restriction of Emission of Particulate Matter from Industrial Processes, which exempts existing Missouri type charcoal kilns from the rule.

(34) A variance from Missouri Rules 10 CSR 10–3.060, Maximum Allowable Emissions of Particulate Matter from Fuel Burning Equipment Used for Indirect Heating, and 10 CSR 10–3.080, Restriction of Emission of Visible Air Contaminants, was submitted by the Missouri Department of Natural Resources on August 12, 1981.

(35) A variance from Missouri Rule 10 CSR 10–2.260, Control of Petroleum Liquid Storage, Loading and Transfer for the Kansas City Metropolitan Area, was submitted by the Missouri Department of Natural Resources on June 11, 1981.

(36) Revisions to Rule 10 CSR 10–5.340, Control of Emissions from Rotogravure and Flexographic Printing Facilities, submitted on April 15, 1982, are approved as RACT.

(37) On April 15, 1982, the State of Missouri submitted a new Rule 10 CSR 10–6.060, Permits Required, and Amendments to Rule 10 CSR 10.6020, Definitions, involving the review and permitting of new sources of air pollution. Included in the plan are provisions relating to the attainment area (PSD) new source review. The plan also includes new source review provisions of nonattainment areas in the State.

(38) Revisions to Rules 10 CSR 10–2.280 (Kansas City) and 10 CSR 10–5.320 (St. Louis), both entitled Control of Emissions from Perchloroethylene Dry Cleaning Installations, and 10 CSR 10–5.290, More Restrictive Emission Limitations for Sulfur Dioxide and Particulate Matter in the South St. Louis Area, submitted on July 13, 1982, are approved.

(39) [Reserved]

(40) The 1982 carbon monoxide and ozone state implementation plan revisions were submitted by the Department of Natural Resources on December 23, 1982. A revised version of the 1982 carbon monoxide and ozone plan was submitted by the Department of Natural Resources on August 24, 1983. This version contained updated inventories, attainment demonstrations and schedules to adopt rules. The submission included new rule 10 CSR 10–5.360, Control of Emissions from Polyethylene Bag Sealing Operations. (No action was taken with respect to provisions dealing with control strategy demonstration, reasonable further progress and inspection and maintenance of motor vehicles.)

(41) Revised rule 10 CSR 10–1.010, General Organization, was submitted by the Missouri Department of Natural Resources on December 30, 1982.

(42) On May 22, 1995, the Governor of Montana submitted revisions to the prevention of significant deterioration regulations in the Administrative Rules of Montana to incorporate changes in the Federal PSD permitting regulations for PM–10 increments.

(i) Incorporation by reference.

(A) Revisions to Administrative Rules of Montana (ARM), rules 16.8.945(3)(c), 16.8.945(21)(d), 16.8.945(24)(d), 16.8.947(1), 16.8.953(7)(a), and 16.8.960(4), effective 10/28/94.

(43) On March 26, 1984, the Missouri Department of Natural Resources submitted a revision to the September 2, 1980, lead State Implementation Plan pertaining to item 4 of the consent order for the St. Joe Lead Company. The revision consists of a substitution of equivalent control measures for item 4.

(44) A variance from Missouri Rule 10 CSR 10–3.050, Restriction of Emission of Particulate Matter from Industrial Processes, for the St. Joe Minerals Corporation, Pea Ridge Iron Ore facility, was submitted by the Missouri Department of Natural Resources on July 1, 1983.

(45) The Missouri Department of Natural Resources submitted revisions to regulations 10 CSR 10–2.100, 3.030, 4.090, and 5.070 requiring operating permits for open burning of untreated wood waste at solid waste disposal and processing installations effective April 12, 1984.

(46) On June 6, 1984, the Missouri Department of Natural Resources submitted the Air Quality Monitoring State Implementation Plan.

(47) In a letter dated August 14, 1984, the Missouri Department of Natural Resources submitted the rules, 10 CSR 10–6.030, Sampling Methods for Air Pollution Sources, and 10 CSR 10–6.040, Reference Methods.

(48) Revised rules 10 CSR 10–2.040, 3.060, 4.040 and 5.030 all entitled ''Maximum Allowable Emission of Particulate Matter from Fuel Burning Equipment Used for Indirect Heating'' were submitted September 24, 1984, by the Department of Natural Resources.

(49) On October 5, 1984, the Missouri Department of Natural Resources submitted a revision to the September 2, 1980, lead State Implementation Plan pertaining to item 6 of the Consent Order for the AMAX Lead Company. The revision consists of a substitution of equivalent control measures for item 6.

(50) The Missouri Department of Natural Resources submitted an amendment to Rule 10 CSR 10–5.330 ''Control of Emissions from Industrial Surface Coating Operations,'' limiting emissions from surface coating of plastic parts and new Rule 10 CSR 10–5.370 ''Control of Emissions from the Application of Deadeners and Adhesives'' on January 24, 1984; and new Rule 10 CSR 10–5.390, ''Control of Emissions from Manufacture of Paints, Varnishes, Lacquers, Enamels and Other Allied Surface Coating Products'' and an amendment to 10 CSR 10–6.020, ''Definitions'' on April 10, 1984. (Approval action was deferred on 10 CSR 10–5.370.)

(51) The motor vehicle inspection and maintenance program for the St. Louis area was submitted August 27, 1984, by the Department of Natural Resources.

(i) Incorporation by reference. (A) Amendment to Regulations 10 CSR 10–5.380, ''Motor Vehicle Emissions Inspections'', published in the Missouri Register January 3, 1982;

(B) Missouri Revised Statutes, Sections 307.350 through 307.395, ''Motor Vehicle Safety Inspection'', as revised September 1983;

(C) Regulations 11 CSR 50–2.010 through 11 CSR 50–2.410, ''Missouri Motor Vehicle Inspection Regulations'', as revised July 1, 1982.

(ii) Additional material. (A) I/M Implementation Schedule.

(B) Highway Patrol Forms.

(C) Missouri Certified Emission Analyzers.

(D) Missouri Department of Revenue Policy.

(E) Highway Patrol QC Manual.

(F) EPA Approval of RACT Compliance.

(G) Public Awareness Materials.

(52) [Reserved]

(53) A rule requiring sources to keep records and report data and requiring emission data to be made public was submitted January 22, 1985, by the Department of Natural Resources. This rule replaces previous rules 10 CSR 10–2.130, 3.130, 4.120, and 5.210, all entitled ''Submission of Emission Information'' which were approved as parts of the State Implementation Plan; and previous rules 10 CSR 10–2.180, 3.120, 4.170, and 5.270, all entitled ''Public Availability of Emission Data'' which were not approved prior to the submission of this replacement rule.

(i) Incorporation by reference. A new regulation 10 CSR 10–6.110 published in the Missouri Register November 1, 1984.

(54) A new rule, Controlling Emissions During Episodes of High Air Pollution Potential, was submitted by the Department of Natural Resources on January 22, 1985.

(i) Incorporation by reference. 10 CSR 10–6.130, Controlling Emissions During Episodes of High Air Pollution Potential, adopted by the Missouri Air Conservation Commission and effective on October 11, 1984.

(ii) Additional material. The State has rescinded rules 10 CSR 10–2.170, 3.110, 4.160, and 5.260, all entitled ''Rules for Controlling Emission During Periods of High Air Pollution Potential.''

(55) [Reserved]

(56) The Missouri Department of Natural Resources submitted the Protection of Visibility Plan, 1985, on May 3, 1985.

(i) Incorporation by reference.

(A) Amendments to Missouri Rule 10 CSR 10–6.020, Definitions, and Rule 10 CSR 10–6.060, Permits Required. These Amendments were adopted by the Missouri Air Conservation Commission and became effective on May 11, 1985.

(ii) Additional material.

(A) Narrative description of visibility new source review program for Class I areas in Missouri.

(B) Visibility monitoring plan for Class I areas in Missouri.

(57) On July 1, 1985, the Missouri Department of Natural Resources submitted amendments to Rules 10 CSR 10–5.220 for the St. Louis Metropolitan Area, and 10 CSR 10–2.260 for the Kansas City Metropolitan Area. The amendments require bulk gasoline plants to be equipped with a vapor recovery system if their monthly throughput is greater than the exemption level.

(i) Incorporation by reference.

(A) 10 CSR 10–5.220, and 10 CSR 10–2.260, Control of Emissions from Petroleum Liquid Storage, Loading, and Transfer, as published in the Missouri Register on May 1, 1985.

(58) A plan revision demonstrating that the ozone standard will be attained in the St. Louis ozone nonattainment area by December 31, 1987, was submitted by the Department of Natural Resources on August 1, 1985.

(i) Incorporation by reference.

(A) An agreement and variance modification order dated July 18, 1985, signed by the Missouri Air Conservation Commission and the General Motors (GM) Corporation requiring that the GM St. Louis assembly plant meet interim emission limitations and comply with the SIP by shutdown by December 31, 1987.

(ii) Additional material.

(A) A revised and corrected emission inventory for base year 1980.

(B) A revised projected year 1987 inventory demonstrating that the additional emission reductions from two new regulations and one plant shutdown, in addition to reductions already required, will be adequate to reduce ambient ozone concentrations to the National Ambient Air Quality Standard for ozone.

(59) A new rule, Control of Emissions from the Production of Maleic Anhydride, was submitted by the Department of Natural Resources on January 21, 1986.

(i) Incorporation by reference.

(A) 10 CSR 10–5.400, Control of Emissions from the Production of Maleic Anhydride, adopted by the Missouri Air Conservation Commission and effective on October 26, 1985.

(60) A plan revision to correct motor vehicle inspection and maintenance testing deficiencies was submitted by the Department of Natural Resources on December 29, 1987.

(i) Incorporation by reference. (A) Regulations 11 CSR 50–2.370 and 11 CSR 50–2.400, effective June 25, 1987.

(61) On June 9, 1986, the state of Missouri submitted an amendment to Rule 10 CSR 10–5.220, Control of Petroleum Liquid Storage, Loading, and Transfer. This amendment requires the control of volatile organic compound emissions from the refueling of motor vehicles in the St. Louis Metropolitan Area.

(i) Incorporation by reference.

(A) 10 CSR 10–5.220, Control of Petroleum Liquid Storage, Loading, and Transfer, revised paragraphs 4, 5, 6, 7, 8, and 9, published in the Missouri Register on May 1, 1985.

(62) A new rule, Control of Equipment Leaks from Synthetic Organic Chemical and Polymer Manufacturing Plants, was submitted by the Department of Natural Resources on November 19, 1986.

(i) Incorporation by reference, 10 CSR 10–5.420, Control of Equipment Leaks from Synthetic Organic Chemical and Polymer Manufacturing Plants, effective on September 26, 1986.

(63) An amendment to the rule, Restriction of Emissions of Sulfur Compounds, was submitted by the Department of Natural Resources on November 19, 1986.

(i) Incorporation by reference.

(A) Amended Regulation 10 CSR 10–3.100, Restriction of Emission of Sulfur Compounds adopted October 16, 1986, and effective on November 28, 1986.

(64) A variance from Missouri Rule 10 CSR 10–3.050, Restriction of Emission

of Particulate Matter from Industrial Processes, for the St. Joe Minerals Corporation, Pea Ridge Iron Ore facility, was submitted by the Missouri Department of Natural Resources on October 22, 1987.

(i) Incorporation by reference.

(A) Variance order modification dated May 21, 1987, issued to St. Joe Minerals Corporation allowing certain equipment at its Pea Ridge Iron Ore facility to operate beyond the limitations specified in Rule 10 CSR 10–3.050, Restriction of emissions of Particulate Matter from Industrial Processes, for outstate Missouri area, effective May 21, 1987.

(65) Revised regulations for the control of volatile organic compound emissions in the Kansas City area were submitted by the Missouri Department of Natural Resources on May 21, 1986, and December 18, 1987. The May 21, 1986, submittal also included anozone attainment demonstration for Kansas City, which will be addressed in a future action.

(i) Incorporation by reference. (A) Revision to Rule 10 CSR 10–2.260, Control of Emissions from Petroleum Liquid Storage, Loading, and Transfer, effective May 29, 1986, with amendments effective December 24, 1987.

(B) New Rule 10 CSR 10–2.300, Control of Emissions from the Manufacturing of Paints, Varnishes, Lacquers, Enamels, and Other Allied Surface Coating Products, effective December 12, 1987.

(C) New Rules 10 CSR 10–2.310, Control of Emissions from the Application of Automotive Underbody Deadeners, and 10 CSR 10–2.320, Control of Emissions from Production of Pesticides and Herbicides, effective November 23, 1987.

(D) Rescinded Rules 10 CSR 10–2.240, Control of Emissions of Volatile Organic Compounds from Petroleum Refinery Equipment, and 10 CSR 10–2.250, Control of Volatile Leaks from Petroleum Refinery Equipment, effective November 23, 1987.

(E) Revision to Rule 10 CSR 10–6.030, Sampling Methods for Air Pollution Sources, effective November 23, 1987, with amendments effective December 24, 1987.

(F) Revision to Rule 10 CSR 10–2.210, Control of Emissions from Solvent Metal Cleaning, effective December 12, 1987.

(G) Revisions to Rules 10 CSR 10–2.290, Control of Emissions from Rotogravure and Flexographic Printing Facilities, and 10 CSR 10–6.020, Definitions, effective December 24, 1987.

(66) The Missouri Department of Natural Resources submitted revisions to its state implementation plan to incorporate PM_{10} on March 29, 1988, May 12, 1988, and June 15, 1988.

(i) Incorporation by reference.

(A) Revisions to the following Missouri air pollution rules:

10 CSR 10–6.010 Ambient Air Quality Standards
10 CSR 10–6.020 Definitions
10 CSR 10–6.040 Reference Methods
10 CSR 10–6.060 Permits Required
10 CSR 10–6.130 Controlling Emissions During Episodes of High Air Pollution Potential

These rules were published in the Missouri Register on April 18, 1988, and became effective April 28, 1988.

(ii) Additional material.

(A) A revision to the Missouri Monitoring Plan was submitted March 29, 1988.

(B) A narrative description of the PM_{10} SIP for the state of Missouri was submitted June 15, 1988.

(67) Plan revisions were submitted by the Missouri Department of Natural Resources on August 18, 1986, and October 18, 1988, which implement EPA's July 8, 1985, revised stack height requirements.

(i) Incorporation by reference.

(A) Revisions to rules 10 C.S.R. 10–6.020, Definitions, and 10 CSR 10–6.060, Permits Required, effective May 11, 1986.

(B) New rule 10 C.S.R. 10–6.140, Restriction of Emissions Credit for Reduced Pollutant Concentrations from the Use of Dispersion Techniques, effective May 11, 1986.

(C) Revisions to rule 10 CSR 10–6.020, Definitions, effective August 25, 1988.

(68) Revised regulations applicable to air quality models were submitted by the Missouri Department of Natural Resources on October 18, 1988.

(i) Incorporation by reference.

(A) Revision of rule 10 CSR 10–6.060 ''Permits Required,'' effective on September 29, 1988.

(69) A plan revision to change the construction permit fees was submitted by the Department of Natural Resources on January 24, 1989, and September 27, 1989.

(i) Incorporation by reference.

(A) Revision to 10 CSR 10–6.060, Permits Required, amended December 19, 1988, effective January 1, 1989.

(ii) Additional material.

(A) Chapter 643 RSMo (House Bill Number 1187) passed by the General Assembly of the state of Missouri in 1988.

(70) The Missouri Department of Natural Resources submitted amendments to Rule 10 CSR 10–2.230 on December 18, 1987, and December 19, 1988. The rule controls volatile organic compound emissions from industrial surface coating facilities in the Kansas City area.

(i) Incorporation by reference. (A) Revision to Rule 10 CSR 10–2.230, Control of Emissions from Industrial Surface Coating Operations, effective December 24, 1987, with amendments effective November 24, 1988.

(71) Revisions to regulations for controlling volatile organic compound emissions in the St. Louis area were submitted by the Missouri Department of Natural Resources on June 14, 1985; November 19, 1986; and March 30, 1989.

(i) Incorporation by reference. (A) New Rule 10 CSR 10–5.410, Control of Emissions from the Manufacture of Polystyrene Resin, effective May 11, 1985, with amendments effective September 26, 1986, and March 11, 1989.

(B) Revisions to Rules 10 CSR 10–5.220, Control of Petroleum Liquid Storage, Loading and Transfer; 10 CSR 10–5.300, Control of Emissions from Solvent Metal Cleaning; 10 CSR 10–5.310, Liquefied Cutback Asphalt Paving Restricted; 10 CSR 10–5.320, Control of Emissions from Perchloroethylene Dry Cleaning Installations; 10 CSR 10–5.340, Control of Emissions from Rotogravure and Flexographic Printing Facilities; 10 CSR 10–5.350, Control of Emissions of Synthesized Pharmaceutical Products; 10 CSR 10–5.360, Control of Emissions from Polyethylene Bag Sealing Operations; 10 CSR 10–5.370, Control of Emissions from the Application of Deadeners and Adhesives; 10 CSR 10–5.390, Control of Emissions from the Manufacturing of Paints, Varnishes, Lacquers, Enamels, and Other Allied Surface Coating Products; 10 CSR 10–5.420, Control of Equipment Leaks from Synthetic Organic Chemical and Polymer Manufacturing Plants; and 10 CSR 6.020, Definitions; effective March 11, 1989.

(C) Rescinded Rule 10 CSR 10–5.400, Control of Emissions from Production of Maleic Anhydride, effective March 11, 1989.

(72) The Missouri Department of Natural Resources submitted new rule 10 CSR 10–5.330, Control of Emissions from Industrial Surface Coating Operations, and amendments to rule 10 CSR 10–6.020, Definitions, on January 11, 1990.

(i) Incorporation by reference.

(A) New rule 10 CSR 10–5.330, Control of Emissions from Industrial Surface Coating Operations, effective November 26, 1989.

(B) Rescinded rule 10 CSR 10–5.330, Control of Emissions from Industrial Surface Coating Operations, effective November 26, 1989.

(C) Revisions to rule 10 CSR 10–6.020, Definitions, effective November 26, 1989.

(73) A rule revision to establish gasoline tank truck certification requirements in ozone nonattainment areas was submitted by the Department of Natural Resources on July 17, 1990.

(i) Incorporation by reference.

(A) Revision to rule 10 CSR 10–2.260 and 10 CSR 10–5.220 both titled ''Control of Petroleum Liquid Storage, Loading, and Transfer'' effective May 24, 1990.

(74) Revisions to the circumvention plan submitted by the Missouri Department of Natural Resources on September 6, 1990.

(i) Incorporation by reference.

(A) Rule at 10 CSR 10–6.150, Circumvention, effective November 30, 1990.

(B) Rescission of rules 10 CSR 10–2.140, Circumvention; CSR 10–4.130, Circumvention; and 10 CSR 10–5.230, Circumvention, effective September 28, 1990.

(75) Plan revisions were submitted by the Missouri Department of Natural Resources on September 25, 1990, which implement EPA's October 17, 1988, PSD NO_x requirements.

(i) Incorporation by reference

(A) Revisions to rules 10 CSR 10–6.020 ''Definitions'' and 10 CSR 10–6.060 ''Permits Required'' were adopted by the Missouri Air Conservation Commission on May 14, 1990, and became effective May 24, 1990.

(ii) Additional Information

(A) Letter from the state dated November 30, 1990, pertaining to NO_x rules and analysis which certifies that the material was adopted by the state on May 24, 1990.

(76) In submittals dated September 6, 1990, and May 8, 1991, the Missouri Department of Natural Resources submitted a lead NAAQS attainment plan for the Doe Run Herculaneum primary lead smelter. Although Missouri rule 10 CSR 10–6.120 contains requirments which apply statewide to primary lead smelting operations, EPA takes action on this rule only insofar as it pertains to the Doe Run Herculaneum facility. Plan revisions to address the other lead smelters in the state are under development.

(i) Incorporation by reference.

(A) New rule 10 CSR 10–6.120, Restriction of Emissions of Lead from Primary Lead Smelter-Refinery Installations, effective December 29, 1988, with amendments effective March 14, 1991.

(B) Consent order, entered into between the Doe Run Company and the Missouri Department of Natural Resources, dated March 9, 1990.

(C) Supplemental consent order, signed by the Doe Run Company on July 26, 1990, and by the Missouri Department of Natural Resources on August 17, 1990.

(ii) Additional material.

(A) Narrative SIP material, submitted on September 9, 1990. This submittal includes the emissions inventory and attainment demonstration.

(B) The Doe Run Herculaneum Work Practice Manual was submitted on May 8, 1991. In the May 8, 1991, submittal letter, the state agreed that any subsequent changes to the work practice manual would be submitted to EPA as SIP revisions.

(77) Revisions to the state implementation plan for the Kansas City metropolitan area were submitted by the Director of the Missouri Department of Natural Resources on October 9, 1991. Revisions include a maintenance plan which demonstrates continued attainment of the NAAQS for ozone through the year 2002. Rule revisions were also submitted on October 9, 1991.

(i) Incorporation by reference.

(A) Revised regulations 10 CSR 10–6.020, Definitions, and 10 CSR 10–2.220, Liquefied Cutback Asphalt Paving Restricted, effective August 30, 1991; and new regulation 10 CSR 10–2.340, Control of Emissions from Lithographic Printing Facilities, effective December 9, 1991.

(ii) Additional material.

(A) State of Missouri Implementation Plan, Kansas City Metropolitan Area Maintenance Provisions, October 1991.

(78) The Missouri Department of Natural Resources submitted new rule 10 CSR 10–6.180, Measurement of Emissions of Air Contaminants, on March 4, 1991.

(i) Incorporation by reference.

(A) New rule 10 CSR 10–6.180 entitled ''Measurement of Emissions of Air Contaminants'' published November 19, 1990, effective December 31, 1990.

(79) The Missouri Department of Natural Resources submitted an amendment on March 19, 1992, to add sampling methods to rule 10 CSR 10–6.030 ''Sampling Methods for Air Pollution Sources.'' On November 20, 1991, Missouri submitted administrative amendments to rule 10 CSR 10–6.030 which renumber and reorganize sections within that rule. Rules which reference the renumbered sections of 10 CSR 10–6.030 were also administratively amended and submitted.

(i) Incorporation by reference.

(A) Revised regulation 10 CSR 10–6.030 ''Sampling Methods for Air Pollution Sources'' effective September 30, 1991.

(B) Administrative amendments to the sampling citations in the following rules which are affected by the administrative amendments to 10 CSR 10–6.030: 10 CSR 10–2.210, effective December 12, 1987; 10 CSR 10–2.230, effective November 24, 1988; 10 CSR 10–2.260, effective May 24, 1990; 10 CSR 10–2.280, effective May 13, 1982; 10 CSR 10–2.290, effective December 24, 1987; 10 CSR 10–2.300, effective December 12, 1987; 10 CSR 10–2.310, effective November 23,

1987; 10 CSR 10–2.320, effective November 23, 1987; 10 CSR 10–3.160, effective December 11, 1987; 10 CSR 10–5.220, effective May 24, 1990; 10 CSR 10–5.300, effective March 11, 1989; 10 CSR 10–5.320, effective March 11, 1989; 10 CSR 10–5.330, effective November 26, 1989; 10 CSR 10–5.350, effective March 11, 1989; 10 CSR 10–5.360, effective March 11, 1989; 10 CSR 10–5.370, effective March 11, 1989; 10 CSR 10–5.390, effective March 11, 1989; 10 CSR 10–5.410, effective March 11, 1989; 10 CSR 10–6.090, effective August 13, 1981; and 10 CSR 10–6.120, effective March 14, 1991.

(80) On June 28, 1991, the Missouri Department of Natural Resources (MDNR) submitted revisions to the Missouri State Implementation Plan which pertain to the St. Louis vehicle inspection and maintenance program. The Missouri rules contain requirements which apply to both safety and emission testing; EPA takes action on these rules only insofar as they pertain to emissions testing.

(i) Incorporation by reference.

(A) New rules 11 CSR 50–2.401, General Specifications; 11 CSR 50–2.402, Missouri Analyzer System (MAS) Software Functions; 11 CSR 50–2.403, MAS Display and Program Requirements; 11 CSR 50–2.405, Vehicle Inspection Certificate, Vehicle Inspection Report and Printer Function Specifications; 11 CSR 50–2.406, Technical Specifications for the MAS; and 11 CSR 50–2.407 Documentation, Logistics and Warranty Requirements; (appendix A, B, C), effective June 28, 1990.

(B) New rule 11 CSR 50–2.404, Test Record Specifications, effective September 28, 1990.

(C) Amended rules 11 CSR 50–2.370 Inspection Station Licensing; 11 CSR 50–2.410, Vehicles Failing Reinspection; and 11 CSR 50–2.420 Procedures for Conducting Only Emission Tests; effective December 31, 1990.

(D) Rescinded rule 11 CSR 50–2,400, Emission Test Procedures; effective December 31, 1990.

(81) The Missouri Department of Natural Resources submitted a rule action rescinding rules 10 CSR 10–2.120, 10 CSR 10–4.110, and 10–5.200, Measurement of Emissions of Air Contaminants for the Kansas City Metropolitan Area, Springfield-Greene County Area, and the St. Louis Metropolitan Area, respectively, on July 9, 1992.

(i) Incorporation by reference.

(A) Rescission of rules 10 CSR 10–2.120, 10 CSR 10–4.110, and 10 CSR 10–5.200 entitled ''Measurement of Emissions of Air Contaminants'' rescinded April 9, 1992.

(82) Revisions to the Missouri State Implementation Plan establishing a Small Business Stationary Source Technical and Environmental Compliance Assistance Program were submitted by the Director of the Missouri Department of Natural Resources on March 10, 1993.

(i) Incorporation by reference.

(A) Small Business Stationary Source Technical and Environmental Compliance Program dated November 1992 and adopted February 18, 1993.

(83) A revision to the Missouri State Implementation Plan (SIP) to incorporate the lead nonattainment areas into the existing new source review (NSR) program was submitted by the state on March 15, 1993. This revision changes the applicability requirements by changing the definition of nonattainment area in the state regulations to include lead nonattainment areas, and to delete the Kansas City area as a nonattainment area in light of its attainment of the ozone standard.

(i) Incorporation by reference.

(A) Revision to rule 10 C.S.R. 10–6.020, definitions, effective February 26, 1993.

(84) The Missouri Department of Natural Resources submitted rule revisions pertaining to rotogravure and flexographic printing facilities in Kansas City, Missouri, and St. Louis, Missouri; and an amendment to the sampling methods rule which adds a compliance test method for the capture efficiency of air pollution control devices. These amendments were submitted September 16 and September 23, 1992.

(i) Incorporation by reference.

(A) Revised regulations 10 CSR 10–2.290 (except section (6), Compliance Dates) and 10 CSR 10–5.340 (except section (6), Compliance Dates), both entitled Control of Emissions from Rotogravure and Flexographic Printing Facilities, effective February 6, 1992.

(B) Revised regulation 10 CSR 10–6.030 (section (20)), effective April 9, 1992.

(85) [Reserved]

(86) A revision to the Missouri SIP to revise the Missouri part D NSR rules, update and add numerous definitions, revise the maximum allowable increase for particulate matter under the requirements for PSD of air quality, address emission statements under Title I of the CAA, and generally enhance the SIP.

(i) Incorporation by reference.

(A) Revision to rules 10 CSR 10–6.020, Definitions and Common Reference Tables, effective August 30, 1995; 10 CSR 10–6.060, Construction Permits Required, effective August 30, 1995; 10 CSR 10–6.110, Submission of Emission Data, Emission Fees, and Process Information, effective May 9, 1994; and 10 CSR 10–6.210, Confidential Information, effective May 9, 1994.

(ii) Additional material. None.

(87) In submittals dated July 2, 1993; June 30, 1994; and November 23, 1994, MDNR submitted an SIP to satisfy Federal requirements for an approvable nonattainment area lead SIP for the Doe Run primary smelter in Herculaneum, Missouri. Although Missouri rule 10 CSR 10–6.120 contains requirements which apply statewide to primary lead smelting operations, EPA takes action on this rule only insofar as it pertains to the Doe Run Herculaneum facility. Plan revisions to address the other lead smelters in the state are under development.

(i) Incorporation by reference.

(A) Revised regulation 10 CSR 10–6.120 (section (1), section (2)(B), section (3)) entitled Restriction of Emissions of Lead From Primary Lead Smelter-Refinery Installations, effective August 28, 1994.

(B) Consent Order, entered into between the Doe Run Company and MDNR, dated July 2, 1993.

(C) Consent Order amendment, signed by the Doe Run Company on March 31, 1994, and by MDNR on April 28, 1994.

(D) Consent Order amendment, signed by the Doe Run Company on September 6, 1994, and by MDNR on November 23, 1994.

(ii) Additional material.

(A) Revisions to the Doe Run Herculaneum Work Practice Manual submitted on July 2, 1993.

(B) Revisions to the Doe Run Herculaneum Work Practice Manual submitted on June 30, 1994.

(88) This revision submitted by the Missouri Department of Natural Resources on March 31, 1994, relates to intermediate sources, and the EPA is not approving the basic operating permit program. This revision establishes a mechanism for creating federally enforceable limitations. Emission limitations and related provisions which are established in Missouri operating permits as federally enforceable conditions shall be enforceable by EPA. EPA reserves the right to deem permit conditions not federally enforceable. Such a determination will be made according to appropriate procedures and be based upon the permit, permit approval procedures, or permit requirements which do not conform with the operating permit program requirements or the requirements of EPA's underlying regulations.

(i) Incorporation by reference.

(A) 10 C.S.R. 10–6.065 (sections 1, 2, 3, 4(C)-(P), 5, and 7) Operating Permits, effective May 9, 1994.

(ii) Additional material.

(A) Letter from Missouri to EPA Region VII dated November 7, 1994, regarding how Missouri intends to satisfy the requirements set forth in the Clean Air Act Amendments at sections 112(l)(5)(A), (B), and (C).

(B) Two letters from Missouri to EPA Region VII dated October 3, 1994, and February 10, 1995, supplementing the November 7, 1994, letter and clarifying that Missouri does have adequate authority to limit potential-to-emit of hazardous air pollutants through the state operating permit program.

(89) In submittals dated July 2, 1993; June 30, 1994; and November 23, 1994, the Missouri Department of Natural Resources (MDNR) submitted a State Implementation Plan (SIP) to satisfy Federal requirements for an approvable nonattainment area lead SIP for the Doe Run primary and secondary smelter near Bixby, Missouri (Doe Run-Buick). Although Missouri rule 10 CSR 10–6.120 contains requirements which

apply statewide to primary lead smelting operations, EPA takes action on this rule insofar as it pertains to the Doe Run-Buick facility. Plan revisions to address the other lead smelters in the state are under development.

(i) Incorporation by reference.

(A) Revised regulation 10 CSR 10–6.120 (section (2)(C), section (4)) entitled Restriction of Emissions of Lead from Primary Smelter-Refinery Installations, effective August 28, 1994.

(B) Consent Order, entered into between the Doe Run Company and MDNR, dated July 2, 1993.

(C) Consent Order amendment, signed by the Doe Run Company on August 30, 1994, and by MDNR on November 23, 1994.

(ii) Additional material.

(A) The Doe Run-Buick Work Practice Manual submitted on July 2, 1993. EPA approves the Work Practice manual with the understanding that any subsequent changes to the Work Practice Manual will be submitted as SIP revisions.

(B) Revisions to the Doe Run-Buick Work Practice Manual submitted on June 30, 1994.

(90)–(91) [Reserved]

(92) On February 14, 1995, the Missouri Department of Natural Resources submitted two new rules which pertain to transportation conformity in Kansas City and St. Louis.

(i) Incorporation by reference.

(A) New rule 10 CSR 10–2.390 (except section (20) Criteria and Procedures: Interim Period Reductions in Ozone Areas (TIP)) and 10 CSR 10–5.480 (except section (22) Criteria and Procedures: Interim Period Reductions in Ozone Areas (TIP)), both entitled Conformity to State Implementation Plans of Transportation Plans, Programs, and Projects Developed, Funded, or Approved Under Title 23 U.S.C. or the Federal Transit Act, effective May 28, 1995.

(ii) Additional material.

(A) Missouri's Air Pollution Control Plan, St. Louis Metropolitan Area Ozone and Carbon Monoxide Transportation Conformity, January 12, 1995.

(B) Missouri's Air Pollution Control Plan, Kansas City Metropolitan Area Ozone Transportation Conformity, January 12, 1995.

(C) Policy agreement, entered into between the Missouri Department of Natural Resources, the Mid-America Regional Council, and the Highway and Transportation Commission of the state of Missouri, dated August 31, 1993.

(D) Letter from the state of Missouri to EPA, dated December 7, 1995, in which the state commits to implementing its state rule consistent with the Federal Transportation Conformity rule, as amended on August 29, 1995, with regards to the granting of an NO_x waiver and the NO_x conformity requirements.

(93) On February 14, 1995, the Missouri Department of Natural Resources (MDNR) submitted a new rule which pertains to general conformity.

(i) Incorporation by reference.

(A) New rule 10 CSR 10–6.300, entitled Conformity of General Federal Actions to State Implementation Plans, effective May 28, 1995.

(94) On April 12, 1995, the Missouri Department of Natural Resources submitted an emissions inventory update to the Kansas City maintenance plan approved by EPA on June 23, 1992. The submittal also establishes a motor vehicle emissions budget for the purpose of fulfilling the requirements of the Federal Transportation Conformity rule.

(i) Incorporation by reference.

(A) Kansas City Ozone Maintenance SIP Revisions: Emission Inventories and Motor Vehicle Emissions Budgets, adopted by the Missouri Air Conservation Commission on March 30, 1995.

[37 FR 10875, May 31, 1972]

EDITORIAL NOTE: For FEDERAL REGISTER citations affecting § 52.1320, see the List of CFR Sections Affected in the Finding Aids section of this volume.

§ 52.1321 Classification of regions.

The Missouri plans were evaluated on the basis of the following classifications:

Air quality control region	Pollutant				
	Particulate matter	Sulfur oxides	Nitrogen dioxide	Carbon monoxide	Photochemical oxidants (hydrocarbons)
Metropolitan Kansas City Interstate	I	III	III	I	I
Southwest Missouri Intrastate	I	III	III	III	III
Southeast Missouri Intrastate	III	III	III	III	III
Northern Missouri Intrastate	II	III	III	III	III
Metropolitan St. Louis Interstate	I	I	III	I	I

[37 FR 10875, May 31, 1972, as amended at 39 FR 16347, May 8, 1974]

§ 52.1322 [Reserved]

§ 52.1323 Approval status.

(a) With the exceptions set forth in this subpart, the Administrator approves Missouri's plans for the attainment and maintenance of the national standards. Continued satisfaction of the requirements of Part D for the ozone portion of the SIP depends on the adoption and submittal of RACT requirements by July 1, 1980, for the sources covered by CTGs issued between January 1978 and January 1979 and adoption and submittal by each successive January of Additional RACT requirements for sources covered by CTGs issued the previous January. New source review permits issued pursuant to section 173 of the Clean Air Act will not be deemed valid by EPA unless the provisions of Section V of the emission offset interpretive rule published on January 16, 1979 (44 FR 3274) are met.

(b) The Administrator approves Rule 10 CSR 10–2.290 as identified under § 52.1320, paragraph (c)(65), with the understanding that any alternative compliance plans issued under this rule must be approved by EPA as individual SIP revisions. In the absence of such approval, the enforceable requirements of the SIP would be the reduction requirements stated in the rule.

(c) The Administrator approves Rule 10 CSR 10–2.230 as identified under § 52.1320, paragraph (c)(70), with the understanding that any alternative compliance plans issued under this rule must be approved by EPA as individual SIP revisions. In the absence of such approval, the enforceable requirements of the SIP would be the emission limits stated in the rule.

(d) The Administrator approves Rule 10 CSR 10–5.340 as identified under § 52.1320, paragraph (c)(71), with the understanding that any alternative compliance plans issued under this rule must be approved as individual SIP revisions. In the absence of such approval, the enforceable requirements of the SIP would be the reduction requirements stated in the rule.

(e) The Administrator approves Rule 10 CSR 10–5.330 as identified under § 52.1320, paragraph (c)(72), under the following terms, to which the state of Missouri has agreed: Subsections (5)(B)3 and (7)(B) of the rule contain provisions whereby the director of the Missouri Air Pollution Control Program has discretion to establish compliance determination procedures and equivalent alternative emission limits for individual sources. Any such director discretion determinations under this rule must be submitted to EPA for approval as individual SIP revisions. In the absence of EPA approval, the enforceable requirements of the SIP are the applicable emission limit(s) in subsection (4)(B) and the compliance determination provisions stated in subsection(5)(B)1 or (5)(B)2.

(f) The Administrator approves Rule 10 CSR 10–6.120 as identified under § 52.1320(c)(76), under the following terms, to which the state of Missouri has agreed. Subparagraph (2)(B)2.B.(IV) contains a provision whereby the Director of the Missouri Department of Natural Resources has discretion to approve revisions to the Doe Run Herculaneum work practice manual. Any revisions to the work practice manual, pursuant to this rule, must be submitted to EPA for approval as an individual SIP revision. Thus, any existing federally approved work practices remain in effect, until such time

that subsequent revisions are submitted to EPA and approved as SIP revisions.

(g) The Missouri portion of the Kansas City metropolitan area was designated as nonattainment for ozone in 40 CFR part 81. Therefore, the Administrator approves continuation of the 7.8 RVP limit as federally enforceable in the Kansas City metropolitan area, even after the area is redesignated to attainment, because of its nonattainment designation effective January 6, 1992. Also, the requirement for 7.8 psi RVP volatility is deemed necessary to ensure attainment and maintenance of the ozone standard as demonstrated by the emissions inventory projections (based on use of 7.8 psi RVP) in Missouri's ozone maintenance plan for the Kansas City metropolitan area.

(h) The state of Missouri commits to revise 10 CSR 6.300 to remove language in paragraphs (3)(C)4. and (9)(B) which is more stringent than the language in the Federal General Conformity rule. In a letter to Mr. Dennis Grams, Regional Administrator, EPA, dated December 7, 1995, Mr. David Shorr, Director, MDNR, stated:

> We commit to initiating a change in the wording in the above paragraphs [paragraphs (3)(C)4. and (9)(B)] of Missouri rule 10 CSR 10–6.300, and to submit the change to EPA within one year from the date of this letter [December 7, 1995]. We intend that the change will give our rule the same stringency as the General Conformity Rule.

(i) Emission limitations and related provisions which are established in Missouri's operation permits as federally enforceable conditions shall be enforceable by EPA. EPA reserves the right to deem permit conditions not federally enforceable. Such a determination will be made according to appropriate procedures, and be based upon the permit, permit approval procedures, or permit requirements which do not conform with the operating permit program requirements or the requirements of EPA's underlying regulations.

[37 FR 10876, May 31, 1972, as amended at 45 FR 24153, Apr. 9, 1980; 45 FR 30630, May 9, 1980; 49 FR 29221, July 19, 1984; 51 FR 31330, Sept. 3, 1986; 51 FR 36012, Oct. 8, 1986; 55 FR 7713, Mar. 5, 1990; 55 FR 46206, Nov. 2, 1990; 57 FR 8077, Mar. 6, 1992; 57 FR 27942, June 23, 1992; 60 FR 22277, May 5, 1995; 60 FR 49343, Sept. 25, 1995; 61 FR 9644, Mar. 11, 1996]

§ 52.1324 [Reserved]

§ 52.1325 Legal authority.

(a) [Reserved]

(b) The requirements of § 51.232(b) of this chapter are not met since the following deficiencies exist in local legal authority.

(1) St. Louis County Division of Air Pollution Control:

(i) Authority to require recordkeeping is lacking (§ 51.230(e) of this chapter).

(ii) Authority to make emission data available to the public is inadequate because section 612.350, St. Louis County Air Pollution Control Code, requires confidential treatment in certain circumstances if the data concern secret processes (§ 51.230(f) of this chapter).

(2) St. Louis City Division of Air Pollution Control:

(i) Authority to require recordkeeping is lacking (§ 51.230(e) of this chapter).

(ii) Authority to require reports on the nature and amounts of emissions from stationary sources is lacking (§ 51.230(e) of this chapter).

(iii) Authority to require installation, maintenance, and use of emission monitoring devices is lacking. Authority to make emission data available to the public is inadequate because Section 39 of Ordinance 54699 requires confidential treatment in certain circumstances if the data relate to production or sales figures or to processes or production unique to the owner or operator or would tend to affect adversely the competitive position of the owner or operator (§ 51.230(f) of this chapter).

(3) Kansas City Health Department:

(i) Authority to require recordkeeping is lacking (§ 51.230(e) of this chapter).

(4) Independence Health Department:

(i) Authority to require recordkeeping is lacking (§ 51.230(e) of this chapter).

(ii) Authority to make emission data available to the public is lacking since section 11.161 of the code of the city of Independence requires confidential treatment in certain circumstances if the data relate to secret processes or trade secrets affecting methods or results of manufacture (§ 51.230(f) of this chapter).

(5) Springfield Department of Health:

(i) Authority to abate emissions on an emergency basis is lacking (§ 51.230(c) of this chapter).

(ii) Authority to require recordkeeping is lacking (§ 51.230(e) of this chapter).

(iii) Authority to make emission data available to the public is inadequate because section 2A–42 of the Springfield City Code requires confidential treatment of such data in certain circumstances (§ 51.230(f) of this chapter).

(c) The provisions of § 51.230(d) of this chapter are not met since statutory, authority to prevent construction, modification, or operation of a facility, building, structure, or installation, or combination thereof, which indirectly results or may result in emissions of any air pollutant at any location which will prevent the maintenance of a national air quality standard is not adequate.

[37 FR 23090, Oct. 28, 1972, as amended at 39 FR 7282, Feb. 25, 1974; 51 FR 13001, Apr. 17, 1986; 51 FR 40676, Nov. 7, 1986; 52 FR 24367, June 30, 1987]

§§ 52.1326—52.1334 [Reserved]

§ 52.1335 Compliance schedules.

(a) The compliance schedule for the source identified below is approved as a revision to the plan pursuant to § 51.104 and subpart N of this chapter. All regulations cited are air pollution control regulations of the State, unless otherwise noted.

MISSOURI

Source	Location	Regulation involved	Adopted date	Effective date	Final compliance date
Pilot Knob Pelleting Co	Pilot Knob, MO	V(10 CSR 10–3.050).	Oct. 19, 1977	Immediately	Dec. 31, 1982.
Union Electric Labadie power plant	Labadie, MO	10 CSR 10–5.090 and 10 CSR 10–5.030.	June 20, 1979	July 20, 1979	Mar. 1, 1984.
St. Joe Minerals Corp., Pea Ridge Iron Ore Facility.	Washington County, MO.	10 CSR 10–3,050.	Mar. 23, 1983	Mar. 23, 1983	Dec. 31, 1988.
St. Joe Minerals Corp., Pea Ridge Iron Ore Facility.	do	do	Apr. 22, 1981	Dec. 28, 1981	July 1, 1985.
Associated Electric Cooperative, Inc., Thomas Hill Power Plant—Unit 1.	Randolph County, MO.	10 CSR 10–3.060 and 10 CSR 10–3.080.	June 17, 1981	Jan. 12, 1982	June 1, 1984.
American Oil Co. (AMOCO)	Sugar Creek, MO.	10 CSR 10–2.260.	Feb. 18, 1981	Oct. 1, 1981	June 1, 1982.
St. Joe Lead Co	Herculaneum, MO.	§ 203.050.1(5) RSM01978.	Aug. 15, 1980	Immediately	Oct. 27, 1984.
AMAX Lead Co	Boss, MO	do	do	do	Apr. 27, 1985.

(b) The compliance schedule submitted for the source identified below is disapproved as not meeting the requirements of subpart N of this chapter. All regulations cited are air pollution control regulations of the State, unless otherwise noted.

Source	Location	Regulation involved	Date adopted
Columbia Water & Light Department	Columbia	S–VI	Apr. 25, 1973.
Union Electric: Electric generating facility	Labadie	X	Mar. 28, 1974.

Source	Location	Regulation involved	Date adopted
Do	Portage des Sioux	X	July 25, 1974.
International Multifoods Corp.: Mechanical sifters	North Kansas City	(1)	Aug. 31, 1976.
Meremac Mining Co., furnace and cooler Nos. 1 through 5	Pea Ridge	II (10 CSR 10–3.050).	Feb. 23, 1977.
Empire District Electric Co., Power Plant	Asbury Joplin	III (10 CSR 10–3.060) V (10 CSR 10–3.080).	Apr. 27, 1977.
Missouri Portland Cement Co., clinker cooler No. 1	Sugar Creek	II (10 CSR 10–2.030) V (10 CSR 10–2.060).	June 22, 1977.
Missouri Public Service Co., Sibley powerplant, unit Nos. 1, 2, and 3.	Sibley	III (10 CSR 10–2.040).	June 26, 1977.
Tamko Asphalt Products, Inc., asphalt saturating line	Joplin	V (10 CSR 10–3.080).	July 26, 1977.
University of Missouri power plant	Columbia	10 CSR 10–3.060.	Feb. 21, 1979.
Noranda Aluminum, Inc	New Madrid	10 CSR 10–3.050.	Feb. 23, 1977.
Associated Electric Cooperative, Inc., Units 1 and 2	.....do	110 CSR 10–3.060.	Apr. 18, 1979.

[1] Regulation IV, air pollution control regulations for Kansas City metropolitan area.

NOTE: X=Air Pollution Control Regulations for the St. Louis Metropolitan Area.

[39 FR 30835, Aug. 26, 1974]

EDITORIAL NOTE: For FEDERAL REGISTER citations affecting § 52.1335, see the List of CFR Sections Affected in the Finding Aids section of this volume.

§§ 52.1336—52.1338 [Reserved]

§ 52.1339 Visibility protection.

(a) The requirements of section 169A of the Clean Air Act are not met because the plan does not include approvable procedures for protection of visibility in mandatory Class I Federal areas.

(b) *Long-term strategy*. The provisions of § 52.29 are hereby incorporated into the applicable plan for the State of Missouri.

[52 FR 45138, Nov. 24, 1987]

Subpart BB—Montana

§ 52.1370 Identification of plan.

(a) Title of plan: ''Implementation Plan for Control of Air Pollution in Montana.''

(b) The plan was officially submitted on March 22, 1972.

(c) The plan revisions listed below were submitted on the dates specified.

(1) Non-regulatory changes to the plan involving compliance schedules, emergency episodes, and air quality surveillance submitted May 10, 1972, by the State Department of Health.

(2) Plan revisions (Regulation 90–001, Part VI, Part VIII, Part XII) submitted June 26, 1972, by the Governor.

(3) The Governor submitted the Air Quality Maintenance Area identification to the Administrator on June 24, 1974.

(4) The Governor submitted revision to the Air Quality Maintenance Areas on January 25, 1975.

(5) Sulfur oxides control strategy and compliance schedule for the American Smelting and Refining Company submitted May 21, 1975, by the Governor.

(6) Sulfur oxides control strategy for the Billings and Laurel areas and schedule of Compliance for the Farmers Union Central Exchange (CENEX) refinery in Laurel submitted by the Governor on January 26, 1978.

(7) On May 5, September 4, and October 1, 1975, the Governor submitted revisions which amended regulations applicable to incinerators, industrial processes, storage of petroleum products, aluminum refineries, and malfunctions.

(8) On April 24, and October 4, 1979, the Governor submitted revisions for Anaconda, East Helena, and Laurel—SO_2; Billings, Butte, Columbia Falls,

Colstrip, East Helena, Great Falls, and Missoula—TSP; Billings and Missoula—CO; and Yellowstone County—ozone. No action is taken with regard to the revised new source review regulation, the revised stack height regulation, or the control strategies for East Helena SO_2 and Yellowstone County ozone.

(9) On February 21, 1980 the Governor submitted a plan revision to meet the requirements of Air Quality Monitoring, 40 CFR part 58, subpart C, § 58.20.

(10) On April 24, October 4, 1979, and January 7, 1980, the Governor submitted revisions to meet Part D and other sections of the Clean Air Act, as amended in 1977. No action is taken with regard to the revised stack height regulation.

(11) On April 21, 1982, and April 22, 1982, Montana submitted revisions to the open burning regulation and redesignated the Anaconda area from nonattainment to attainment for sulfur dioxide (SO_2).

(12) On January 19, 1983, Montana submitted revisions to the State Implementation Plan to meet the requirements of Part C, Subpart 1, and section 110 of the Clean Air Act.

(13) On July 20, 1982 Montana submitted revisions which amended the State's rules relating to malfunctions.

(14) Revisions to the SIP for Missoula and Billings Carbon Monoxide (CO) and Missoula Total Suspended Particulate (TSP) Attainment Plans were submitted by the Governor on August 14, 1981. A revision specifying a list of statewide source test procedures was submitted by the Governor on September 21, 1981.

(i) Incorporation by reference.

(A) Letter from Governor Ted Schwinden to EPA Region VIII Regional Administrator dated September 21, 1981, and document entitled ''Montana SDHED–AQB Sampling and Analytical Procedures'' as part of the SIP, adopted December 31, 1972.

(B) Missoula City Council Resolution Number 4146 approving amendments to Missoula Total Suspended Particulate and Carbon Monoxide Air Quality Attainment Plans, adopted on May 4, 1981.

(C) Missoula Board of County Commissioners Resolution number 81–73 approving changes in the Missoula TSP and CO State Implementation Plan, adopted on May 13, 1981.

(ii) Additional material.

(A) ''Missoula SIP Revisions; Revision to Total Suspended Particulates Stategies and Strategy Development and Implementation for Carbon Monoxide,'' 1981.

(B) Certification of approval by Montana Board of Health and Environmental Sciences on May 28, 1981 of the ''Transportation Control Plan'' (July, 1980) prepared by Billings-Yellowstone City-County Planning Board.

(C) Billings-Yellowstone City-County Planning Board ''Transportation Control Plan'', July, 1980, approved on May 28, 1981.

(15) On September 29, 1983, the Governor submitted the Montana State Implementation Plan revision for lead.

(16) A revision to the East Helena nonattainment plan for sulfur dioxide (SO_2) was submitted on June 7, 1982, and supplemental information was submitted October 4, 1983.

(17) On September 21, 1981 the Governor submitted a permit which had been issued to the Western Energy Company as required in the conditional approval of the Colstrip TSP plan.

(18) In a letter dated March 28, 1986, the Governor submitted modifications to the Montana SIP which revised rules governing stack height and dispersion techniques. In a letter dated November 25, 1985, the Chief of the Air Quality Bureau, Montana, submitted the stack height demonstration analysis with supplemental information submitted on January 28, 1986. EPA is approving the demonstration analysis for all of the stacks except the ASARCO stacks.

(i) Incorporation by reference. (A) Revisions to the Administrative Rules of Montana effective on June 13, 1986. The modifications repeal Administrative Rules of Montana (ARM 116.8.1201, 116.8.1202 and 16.8.1203 in Subchapter 12 and adds ARM 16.8.1204 (Definitions), 16.8.1205 (Requirements), and 16.8.1206 (Exemptions).

(B) Stack height demonstration analysis submitted by the State on November 25, 1985 (except for materials pertaining to ASARCO), and January 28, 1986 (except for meterials pertaining to ASARCO and Appendix A).

(19) On August 21, 1985 and September 5, 1989, the Governor of Montana submitted revisions to the plan. The submittal revised existing Prevention of Significant Deterioration (PSD) regulations.

(i) Incorporation by reference. (A) Amendments to the Administrative Rules of Montana (ARM) 16.8.921 (27), (Definitions), effective April 1, 1983.

(B) Amendments to the Administrative Rules of Montana (ARM) 16.8.921(2), (Definitions), effective September 13, 1985.

(C) Amendments to the ARM 16.8.921(21) and (27) (Definitions), ARM 16.8.936 (Exemptions from Review], ARM 1 6.8.937 (Air Quality Models), and ARM 16.8.941 (Class I Variances—General), effective June 16, 1989.

(ii) Additional material. (A) February 29, 1988 letter from Douglas Skie, EPA, to Jeffrey Chaffee, Chief of the Montana Air Quality Bureau.

(B) September 9, 1988 letter from Jeffrey Chaffee, Chief of the Montana Air Quality Bureau, to Douglas Skie, EPA.

(C) December 14, 1988 letter from Douglas Skie, EPA, to Jeffrey Chaffee, Chief of the Montana Air Quality Bureau.

(D) April 28, 1989 letter from Jeffrey Chaffee, Chief of the Montana Air Quality Bureau, to Douglas Skie, EPA.

(20) A revision to the SIP was submitted by the Governor on August 21, 1985, for visibility monitoring and new source review.

(i) Incorporation by reference.

(A) Revision to the Montana SIP was made on July 19, 1985, for visibility new source review and monitoring.

(B) Revision to the Administrative Rules of Montana (ARM) was made on July 19, 1985, for visibility which includes new regulations ARM 16.8.1001–.1008 and revising ARM 16.8.1107(3).

(21) Revisions to Montana TSP SIP for Butte were submitted by Governor Ted Schwinden on February 10, 1983.

(i) Incorporation by reference.

(A) State of Montana Air Quality Control, Implementation Plan, Chapter 5C, Butte, adopted January 14, 1983.

(B) Air quality Permit #1749 for Anaconda Minerals Company filed March 28, 1983.

(22) Revisions to the Montana CO SIP for Great Falls were submitted by the Governor on March 28, 1986.

(i) Incorporation by reference.

(A) Montana Refining Company permit dated October 20, 1985.

(B) Stipulation in the matter of the Montana Refining Company dated December 2, 1985.

(ii) Additional material. (A) Montana SIP, chapter 5(3)D. Great Falls (Date: March 14, 1986).

(B) Pre-filed testimony by the Department of Health and Environmental Services dated February 28, 1986.

(23) On March 9, 1988, the Governor submitted a plan revising the State's Air Quality Modeling Rule (16.8.937) and its Particulate Matter, Fuel Burning Equipment Rule (16.8.1402).

(i) Incorporation by reference. (A) Modification to the State of Montana Air Quality Rules, that is the Air Quality Modeling rule (16.8.937) and the Particulate Matter, Fuel Burning Equipment rule (16.8.1402) adopted on January 15, 1988.

(24) On July 13, 1990, the Governor of Montana submitted revisions to the Montana Air Quality Rules, Sub-chapter 9, Prevention of Significant Deterioration of Air Quality (PSD) Regulations, to incorporate the nitrogen dioxide (NO_2) increments.

(i) *Incorporation by reference.* (A) Revisions to the Montana Air Quality Rules, Subchapter 9, Prevention of Significant Deterioration of Air Quality (PSD) effective on July 12, 1990.

(ii) *Additional material.* (A) October 22, 1990 letter from Douglas Skie, EPA, to Jeffrey Chaffee, Chief, Montana Air Quality Bureau.

(B) December 4, 1990 letter from Jeffrey Chaffee, Chief, Montana Air Quality Bureau, to Douglas Skie, EPA.

(C) January 4, 1991 letter from Jeffrey Chaffee, Chief, Montana Air Quality Bureau, to Douglas Skie, EPA.

(D) April 30, 1991 letter from Douglas Skie, EPA, to Jeffrey Chaffee, Chief, Montana Air Quality Bureau.

(25) On August 20, 1991, the Governor of Montana submitted revisions to the plan for new source performance standards and national emission standards for hazardous air pollutants.

(i) *Incorporation by reference.*

(A) Revisions to the Administrative Rules of Montana 16.8.1423, Standards of Performance of New Stationary Sources, and 16.8.1424, Emission Standards for Hazardous Air Pollutants, adopted July 1, 1991, effective July 12, 1991.

(ii) *Additional material.*

(A) Letter dated April 20, 1992 from Jeffrey T. Chaffee, Chief of the Montana Air Quality Bureau, to Doug Skie, Chief of Air Programs Branch, EPA Region VIII.

(26) On April 2, 1992, the Governor of Montana submitted revisions to the plan. The revisions included amendments to the Montana Air Quality Rules incorporating the July 1, 1991, version of the Montana Quality Assurance Manual and streamlining of the procedure for updating the Quality Assurance Manual.

(i) Incorporation by reference.

(A) Revisions, as adopted March 31, 1992, to the Montana Air Quality Rules: 16.8.807 Ambient Air Monitoring, 16.8.809 Methods and Data, and the repeal of 16.8.810 Procedures for Reviewing and Revising the Montana Quality Assurance Manual.

(27) On April 25, 1988, the Governor submitted a plan to help assure attainment and maintenance of the PM–10 NAAQS throughout the State of Montana.

(i) Incorporation by reference.

(A) Amendments to the Administrative Rules of Montana (ARM) 16.8.821 (Ambient Air Quality Standards), and ARM 16.8.701, ARM 16.8.806, and ARM 16.8.921 (Definitions), effective April 29, 1988.

(B) Amendments to the ARM, subchapter 9 (Prevention of Significant Deterioration): sections 16.8.924, 16.8.925, and 16.8.936, effective April 29, 1988; section 16.8.937, effective March 11, 1988; section 16.8.930, effective April 1, 1988; and sections 16.8.922, 16.8.923, 16.8.926, 16.8.927, 16.8.928, 16.8.929, 16.8.931, 16.8.932, 16.8.933, 16.8.934, 16.8.935, 16.8.938, 16.8.939, 16.8.940, 16.8.941, 16.8.942, 16.8.943, effective January 1, 1983.

(C) Amendments to the ARM, subchapter 10 (Visibility Impact Assessment): section 16.8.1007, effective April 29, 1988; and sections 16.8.1001, 16.8.1002, 16.8.1003, 16.8.1004, 16.8.1005, 16.8.1006, and 16.8.1008, effective March 11, 1988; section 16.8.930, effective September 13, 1985.

(D) Amendments to the ARM, subchapter 12 (Stack Heights and Dispersion Techniques), sections 16.8.1204, 16.8.1205, and 16.8.1206, effective June 13, 1986.

(E) Amendments to the ARM, subchapter 13 (Open Burning), sections 16.8.1301, 16.8.1302, 16.8.1303, 16.8.1304, 16.8.1305, 16.8.1306, 16.8.1307, and 16.8.1308, effective April 16, 1982.

(F) Amendments to the ARM, subchapter 14 (Emission Standards): section 16.8.1401, effective February 16, 1979; section 16.8.1402, effective March 11, 1988; section 16.8.1403, effective September 5, 1975; section 16.8.1404, effective June 13, 1986; section 16.8.1406, effective December 29, 1978; section 16.8.1419, effective December 31, 1972; section 16.8.1423, effective March 11, 1988; and section 16.8.1428, effective June 13, 1986.

(G) Amendments to the ARM, Sub-Chapter 16 (Combustion Device Tax Credit), sections 16.8.1601 and 16.8.1602, effective December 27, 1985.

(H) Appendix G–2, Montana Smoke Management Plan, effective April 15, 1988.

(28) On August 20, 1991, the Governor of Montana submitted revisions to the plan for visibility models, new source performance standards, and national emission standards for hazardous air pollutants.

(i) Incorporation by reference.

(A) Revisions to the Administrative Rules of Montana 16.8.1004, Visibility Models, 16.8.1423, Standards of Performance for New Stationary Sources, and 16.8.1424, Emission Standards for Hazardous Air Pollutants, effective December 25, 1992.

(29) The Governor of Montana submitted a portion of the requirements for the moderate nonattainment area PM_{10} State Implementation Plan (SIP) for Butte, Montana with a letter dated July 9, 1992, with technical corrections dated May 17, 1993. The submittals were made to satisfy those moderate PM_{10} nonattainment area SIP requirements due for Butte on November 15, 1991.

(i) Incorporation by reference.

(A) Stipulation signed October 8, 1991 between the Montana Department of Health and Environmental Sciences and the Butte-Silver Bow Council of Commissioners, which delineates responsibilities and authorities between the two entities.

(B) Board order issued on November 15, 1991 by the Montana Board of Health and Environmental Sciences approving the Butte-Silver Bow Air Pollution Control Program.

(C) Stipulation between the Montana Department of Health and Environmental Sciences (signed September 27, 1991), the Montana Department of Transportation (signed October 4, 1991), and the Butte-Silver Bow Council of Commissioners (signed October 7, 1991) to ensure that Butte-Silver Bow and the Montana Department of Transportation comply with Butte-Silver Bow Council Resolution No. 1307.

(D) Butte/Silver Bow Resolution No. 1307, effective March 6, 1991, which addresses sanding and chip sealing standards and street sweeping and flushing requirements.

(E) Butte/Silver Bow Ordinance No. 330, effective August 3, 1988, which addresses residential wood burning and idling diesel vehicle and locomotive requirements.

(ii) Additional material.

(A) Montana Department of Health and Environmental Sciences Air Quality Permit #1636A, with a final modification date of October 26, 1991, for Rhone-Poulenc's elemental phosphorus plant.

(B) Montana Department of Health and Environmental Sciences Air Quality Permit #1749–04, with a final modification date of March 20, 1992, for Montana Resources, Inc.'s open pit copper and molybdenum mine, crushing and milling operation and concentrator.

(C) Montana Smoke Management Plan, effective April 28, 1988, which addresses prescribed burning requirements.

(D) Federal tailpipe standards, which provide an ongoing benefit due to fleet turnover.

(30) The Governor of Montana submitted a portion of the requirements for the moderate nonattainment area PM_{10} State Implementation Plan (SIP) for Missoula, Montana, and the Missoula City-County Air Pollution Control Program regulations with letters dated August 20, 1991 and June 4, 1992. The submittals were made to satisfy those moderate PM_{10} nonattainment area SIP requirements due for Missoula on November 15, 1991.

(i) Incorporation by reference.

(A) Stipulation signed April 29, 1991, between the Montana Department of Health and Environmental Sciences and the Missoula City-County Air Pollution Control Board, which delineates responsibilities and authorities between the two entities.

(B) Board order issued on June 28, 1991, by the Montana Board of Health and Environmental Sciences approving the comprehensive revised version of the Missoula City-County Air Pollution Control Program.

(C) Board order issued on March 20, 1992, by the Montana Board of Health and Environmental Sciences approving the amendments to Missoula City-County Air Pollution Control Program Rule 1401, concerning the use of approved liquid de-icer, and Rule 1428, concerning pellet stoves.

(D) Missoula County Rule 1401 (7), effective June 28, 1991, which addresses sanding and chip sealing standards and street sweeping and flushing requirements.

(E) Missoula County Rule 1401 (9), effective March 20, 1992, which addresses liquid de-icer requirements.

(F) Missoula County Rule 1428, effective June 28, 1991, with revisions to sections (2)(l)-(p), (4)(a)(i), and (4)(c)(vi) of Rule 1428, effective March 20, 1992, which addresses requirements for solid fuel burning devices.

(G) Missoula County Rule 1310 (3), effective June 28, 1991, which addresses prescribed wildland open burning.

(H) Other Missoula City-County Air Pollution Control Program regulations effective June 28, 1991, as follows: Chapter I. Short Title; Chapter II. Declaration of Policy and Purpose; Chapter III. Authorities for Program; Chapter IV. Administration; Chapter V. Control Board, Meetings-Duties-Powers; Chapter VI. Air Quality Staff; Chapter VII. Air Pollution Control Advisory Council; Chapter VIII. Inspections; Chapter IX., Subchapter 7 General Provisions; Chapter IX., Subchapter 14, Emission

Standards, Rules 1401, 1402, 1403, 1404, 1406 (with amendments effective March 20, 1992), 1411, 1419, 1425, and 1426; Chapter XI. Enforcement, Judicial Review and Hearings; Chapter XII. Criminal Penalties; Chapter XIII. Civil Penalties; Chapter XIV. Non-Compliance Penalties; Chapter XV. Separability Clause; Chapter XVI. Amendments and Revisions; Chapter XVII. Limitations, and Appendix A, Maps.

(ii) Additional material.

(A) Montana Department of Health and Environmental Sciences Air Quality Permit #2303-M, with a final modification date of March 20, 1992, for Louisiana-Pacific Corporation's particle board manufacturing facility.

(B) Montana Department of Health and Environmental Sciences Air Quality Permit #2589-M, with a final modification date of January 23, 1992, for Stone Container Corporation's pulp and paper mill facility.

(C) Federal tailpipe standards, which provide an ongoing benefit due to fleet turnover.

(31) The Governor of Montana submitted a portion of the requirements for the moderate nonattainment area PM_{10} State Implementation Plan (SIP) for Columbia Falls, Montana with letters dated November 25, 1991, and May 6, 1992, with technical corrections dated June 15, 1993. The submittals were made to satisfy those moderate PM_{10} nonattainment area SIP requirements due for Columbia Falls on November 15, 1991.

(i) Incorporation by reference.

(A) Stipulation signed November 15, 1991, between the Montana Department of Health and Environmental Sciences, the Flathead County Commission, and the Kalispell City Council and the Columbia Falls City Council, which delineates responsibilities and authorities between the MDHES and Flathead County.

(B) Board order issued on November 15, 1991, by the Montana Board of Health and Environmental Sciences approving the Flathead County Air Pollution Control Program.

(C) Flathead County Board of Commissioners Resolution No. 867, adopting the Flathead County Air Pollution Control Program and Flathead County Air Pollution Control Regulations, with the exception of rules 501 through 506, signed October 3, 1991.

(ii) Additional material.

(A) Montana Department of Health and Environmental Sciences Air Quality Permit # 2667-M, with a final modification date of January 24, 1992, for Plum Creek Manufacturing, Inc. Columbia Falls Operations.

(B) Montana Smoke Management Plan, effective April 28, 1988, which addresses prescribed burning requirements.

(C) Federal tailpipe standards, which provide an ongoing benefit due to fleet turnover.

(32) On November 6, 1992, Stan Stephens, the Governor of Montana, submitted a SIP revision to the Implementation Plan for the Control of Air Pollution. This revision establishes and requires the implementation of an oxygenated fuels program in Missoula County as required by section 211(m) of the Clean Air Act Amendments of 1990.

(i) Incorporation by reference.

(A) Missoula City-County Rule 1429, which establishes and requires the implementation of an oxygenated fuel program, as adopted June 9, 1992.

(ii) Additional materials.

(A) Letter dated November 6, 1992, from Governor Stan Stephens submitting the oxygenated gasoline program SIP revision.

(B) Stipulation signed June 12, 1991 between the Montana Department of Health and Environmental Sciences and the Missoula City-County Air Pollution Control Board, which delineates the responsibilities and authorities between the two entities.

(C) Board order issued September 25, 1992 by the Montana Board of Health and Environmental Sciences approving amendments to Missoula City-County Air Pollution Control Program, adopting Rule 1429 establishing and implementing an oxygenated fuels program.

(33) The Governor of Montana submitted a portion of the requirements for the moderate nonattainment area PM_{10} State Implementation Plan (SIP) for Libby, Montana with letters dated November 25, 1991 and May 24, 1993, with technical corrections dated June 3, 1994. The submittals were to satisfy those moderate PM_{10} nonattainment

area SIP requirements due for Libby on November 15, 1991.

(i) Incorporation by reference.

(A) Stipulation signed October 7, 1991 between the Montana Department of Health and Environmental Sciences (MDHES), the County of Lincoln and the City of Libby, which delineates responsibilities and authorities between the MDHES, Lincoln County and Libby.

(B) Board order issued on November 15, 1991 by the Montana Board of Health and Environmental Sciences approving the Lincoln County Air Pollution Control Program.

(C) Stipulation signed March 18, 1993 between the Montana Department of Health and Environmental Sciences, the County of Lincoln and the City of Libby, seeking approval of amendments to the local air pollution control program.

(D) Board order issued on March 19, 1993 by the Montana Board of Health and Environmental Sciences approving amendments to the Lincoln County Air Pollution Control Program.

(E) Letter dated February 4, 1993, from Kendra J. Lind, Lincoln County Department of Environmental Health, to Gretchen Bennitt, Air Quality Bureau, Montana Department of Health and Environmental Sciences, which explains the local adoption process and effective date of amendments to the Lincoln County Air Quality Control Program regulations.

(F) Lincoln County Board of Commissioners Resolution No. 276, signed December, 23, 1992, and Libby City Council Ordinance No. 1470, signed February 1, 1993, adopting amendments to the Lincoln County Air Quality Control Program regulations 1 through 7.

(ii) Additional material.

(A) Montana Department of Health and Environmental Sciences Air Quality Permit #2627–M, with a final modification date of July 25, 1991, for Stimson Lumber Company (formerly Champion International Corporation), Libby Facility.

(B) Montana Smoke Management Plan, effective April 28, 1988, which addresses prescribed burning requirements.

(C) Federal tailpipe standards, which provide an ongoing benefit due to fleet turnover.

(34) [Reserved]

(35) The Governor of Montana submitted PM_{10} and CO contingency measures for Missoula, Montana in a letter dated March 2, 1994. The Governor of Montana also submitted the Missoula City-County Air Pollution Control Program in a letter dated August 20, 1991, with amendments submitted in letters dated June 4, 1992 and March 2, 1994. The March 2, 1994 submittal satisfies several commitments made by the State in its original PM_{10} moderate nonattainment area SIP.

(i) Incorporation by reference.

(A) Board order issued on November 19, 1993 by the Montana Board of Health and Environmental Sciences approving the amendments to Missoula City-County Air Pollution Control Program Chapter VII, VIII, and IX, regarding, among other things, the PM_{10} and CO contingency measures, inspections, emergency procedures, permitting, and wood-waste burners.

(B) Missoula City-County Chapter IX, Subchapter 3, effective November 19, 1993, which addresses the PM_{10} and CO contingency measure selection process.

(C) Missoula City-County Rule 1401(7), effective November 19, 1993, which addresses PM_{10} contingency measure requirements for an expanded area of regulated road sanding materials.

(D) Missoula City-County Rule 1428(5) and 1428(7), effective November 19, 1993, which addresses PM_{10} and CO contingency measure requirements for solid fuel burning devices.

(E) Missoula City-County Air Pollution Control Program Chapter IX, Subchapter 13, Open Burning, effective June 28, 1991.

(F) Other Missoula City-County Air Pollution Control Program regulations effective June 28, 1991, with amendments effective on March 20, 1992 and November 19, 1993, as follows: all portions of Chapter IX, Subchapter 11, Permit, Construction and Operation of Air Contaminant Sources, except, Rules 1102(3), 1105(2), and 1111(2).

(G) Other Missoula City-County Air Pollution Control Program regulations

effective June 28, 1991, with amendments effective on November 19, 1993, as follows: Chapter IX, Subchapter 4, Emergency Procedures and Chapter IX, Subchapter 14, Rule 1407, Prevention, Abatement and Control of Air Pollution from Wood-Waste Burners.

(H) Minor revisions to Missoula City-County Air Pollution Control Program Chapter VII, Air Quality Advisory Council, and Chapter VIII, Inspections, effective on November 19, 1993, as follows: Chapter VII(1) and Chapter VIII(4).

(36) The Governor of Montana submitted PM_{10} contingency measures for Butte, Montana in a letter dated August 26, 1994. This submittal also contained revisions to the attainment and maintenance demonstrations for the moderate PM_{10} nonattainment area SIP, due to modifications made to the Air Quality Permit for Montana Resources, Inc.

(i) Incorporation by reference.

(A) Board order issued on May 20, 1994 by the Montana Board of Health and Environmental Sciences approving the amendments to the Butte/Silver Bow Air Pollution Control Program regarding the PM_{10} contingency measure.

(B) Butte/Silver Bow Ordinance No. 468, effective May 20, 1994, which addresses PM_{10} contingency measure requirements for liquid de-icer application.

(ii) Additional material.

(A) Montana Department of Health and Environmental Sciences Air Quality Permit #1749–05, as revised with a final modification date of January 5, 1994, for Montana Resources, Inc.'s open pit copper and molybdenum mine, crushing and milling operation, and concentrator.

(37) The Governor of Montana submitted a SIP revision meeting the requirements for the primary SO_2 NAAQS State Implementation Plan (SIP) for the East Helena, Montana nonattainment area with a letter dated March 30, 1994. The submittal was to satisfy those SO_2 nonattainment area SIP requirements due for East Helena on May 15, 1992.

(i) Incorporation by reference.

(A) Stipulation signed March 15, 1994, between the Montana Department of Health and Environmental Sciences (MDHES) and Asarco, Incorporated, which specifies SO_2 emission limitations and requirements for the company's primary lead smelter located in East Helena, MT.

(B) Board order issued on March 18, 1994, by the Montana Board of Health and Environmental Sciences approving and adopting the control strategy for achieving and maintaining the primary SO_2 NAAQS in the East Helena area.

(38) [Reserved]

(39) On May 17, 1994, the Governor of Montana submitted revisions to the Administrative Rules of Montana (ARM) regarding nonattainment new source review, prevention of significant deterioration, general construction permitting, wood waste burners, source test methods, new source performance standards, and national emission standards for hazardous air pollutants. Also, the Governor requested that all existing State regulations approved in the SIP be replaced with the October 1, 1979 codification of the ARM as in effect on March 30, 1994. EPA is replacing all of the previously approved State regulations, except ARM 16.8.1302 and 16.8.1307, with those regulations listed in paragraph (c)(39)(i)(A) of this section. ARM 16.8.1302 and 16.8.1307, as in effect on April 16, 1982 and as approved by EPA at 40 CFR 52.1370(c)(11), will remain part of the SIP.

(i) Incorporation by reference.

(A) Administrative Rules of Montana (ARM) Sections 16.8.201–202, 16.8.301–304, and 16.8.401–404, effective 12/31/72; Section 16.8.701, effective 12/10/93; Section 16.8.704, effective 2/14/87; Section 16.8.705, effective 6/18/82; Section 16.8.707, effective 9/13/85; Sections 16.8.708–709, effective 12/10/93; Sections 16.8.945–963, effective 12/10/93; Sections 16.8.1001–1003, effective 9/13/85; Section 16.8.1004, effective 12/25/92; Sections 16.8.1005–1006, effective 9/13/85; Section 16.8.1007, effective 4/29/88; Section 16.8.1008, effective 9/13/85; Section 16.8.1101, effective 6/16/89; Section 16.8.1102, effective 2/14/87; Section 16.8.1103, effective 6/16/89; Section 16.8.1104, effective 3/16/79; Section 16.8.1105, effective 12/27/91; Sections 16.8.1107 and 16.8.1109, effective 12/10/93; Sections 16.8.1110–1112. effective 3/16/79; Section 16.8.1113, effective 2/14/87; Section 16.8.1114, effective 12/10/93; Sections

16.8.1115, 16.8.1117, and 16.8.1118, effective 3/16/79; Sections 16.8.1119–1120, effective 12/10/93; Sections 16.8.1204–1206, effective 6/13/86; Sections 16.8.1301 and 16.8.1303, effective 4/16/82; Section 16.8.1304, effective 9/11/92; Section 16.8.1305, effective 4/16/82; Section 16.8.1306, effective 4/1/82; Section 16.8.1308, effective 10/16/92; Section 16.8.1401, effective 10/29/93; Section 16.8.1402, effective 3/11/88; Section 16.8.1403, effective 9/5/75; Section 16.8.1404, effective 6/13/86; Section 16.8.1406, effective 12/29/78; Section 16.8.1407, effective 10/29/93; Section 16.8.1411, effective 12/31/72; Section 16.8.1412, effective 3/13/81; Section 16.8.1413, effective 12/31/72; Section 16.8.1419, effective 12/31/72; Sections 16.8.1423, 16.8.1424, and 16.8.1425 (except 16.8.1425(1)(c) and (2)(d)), effective 10/29/93; Section 16.8.1426, effective 12/31/72; Sections 16.8.1428–1430, effective 10/29/93; Section 16.8.1501, effective 2/10/89; Section 16.8.1502, effective 2/26/82; Section 16.8.1503, effective 2/10/89; Sections 16.8.1504–1505, effective 2/26/82; Sections 16.8.1701–1705, effective 12/10/93; and Sections 16.8.1801–1806, effective 12/10/93.

(40) The Governor of Montana submitted a PM_{10} plan for Kalispell, Montana in a letter dated November 25, 1991. The Governor of Montana later submitted additional materials in letters dated January 11, 1994, August 26, 1994, and July 18, 1995. The August 26, 1994, and July 18, 1995 submittals also contain the Kalispell Contingency Measure Plan. The August 26, 1994, submittal also contains the Columbia Falls PM_{10} contingency measures and minor revisions to the attainment and maintenance demonstrations for the moderate PM_{10} nonattainment area SIP for Columbia Falls. Finally, the August 26, 1994, submittal contains revisions to the Flathead County Air Pollution Control Program regulations.

(i) Incorporation by reference.

(A) Stipulations signed September 15, 1993 between the Montana Department of Health and Environmental Sciences and the following industries: A–1 Paving; Equity Supply Company; Flathead Road Dept. (two stipulations issued); Klingler Lumber Co.; McElroy and Wilkins; and Montana Mokko.

(B) Stipulations signed September 17, 1993 between the Montana Department of Health and Environmental Sciences and the following industries: Pack and Company, Inc.; Pack Concrete; and Plum Creek Inc. (Evergreen).

(C) Board Order issued on September 17, 1993, by the Montana Board of Health and Environmental Sciences enforcing emissions limitations specified by stipulations signed by both the Montana Department of Health and Environmental Services and participating facilities. The participating facilities included: A–1 Paving; Equity Supply Company; Flathead Road Dept. (two stipulations issued); Klingler Lumber Co.; McElroy and Wilkins; Montana Mokko; Pack and Company, Inc.; Pack Concrete; and Plum Creek Inc. (Evergreen).

(D) Flathead County Board of Commissioners Resolution No. 867B, dated April 4, 1994, adopting the Flathead County Air Pollution Control Program.

(E) Board Order issued May 20, 1994, by the Montana Board of Health and Environmental Sciences approving the Flathead County Air Pollution Control Program.

(F) Flathead County Air Pollution Control Program, including all regulations found in Chapter VIII, Sub-Chapters 1–6, effective May 20, 1994.

(ii) Additional material.

(A) Montana Smoke Management Plan, effective April 28, 1988, which addresses prescribed burning requirements.

(B) Federal tailpipe standards, which provide an ongoing benefit due to fleet turnover.

(41) The Governor of Montana submitted revisions to the Missoula City-County Air Pollution Control Program in a letter dated March 3, 1995. In addition, the March 3, 1995 submittal satisfies the one remaining commitment made by the State in its original PM_{10} moderate nonattainment area SIP.

(i) Incorporation by reference.

(A) Board order issued on September 16, 1994 by the Montana Board of Health and Environmental Sciences approving the amendments to Missoula City-County Air Pollution Control Program Chapters IX and XVI regarding,

among other things, emergency procedures, paving of private roads, driveways, and parking lots, National standards of performance for new stationary sources, National Emission Standards for Hazardous Air Pollutants, and solid fuel burning devices.

(B) Missoula City-County Rule 401, Missoula County Air Stagnation Plan, effective September 16, 1994.

(C) Missoula City-County Rule 1401, Prevent Particulate Matter from Being Airborne, effective September 16, 1994.

(D) Missoula City-County Rule 1423, Standard of Performance for New Stationary Sources, effective September 16, 1994.

(E) Missoula City-County Rule 1424, Emission Standards for Hazardous Air Pollutants, effective September 16, 1994.

(F) Missoula City-County Rule 1428, Solid Fuel Burning Devices, effective September 16, 1994.

(G) Missoula City-County Air Pollution Control Program Chapter XVI, Amendments and Revisions, effective September 16, 1994.

[37 FR 10877, May 31, 1972]

EDITORIAL NOTE: For FEDERAL REGISTER citations affecting § 52.1370, see the List of CFR Sections Affected in the Finding Aids section of this volume.

§ 52.1371 Classification of regions.

The Montana plan was evaluated on the basis of the following classifications:

Air quality control region	Pollutant				
	Particulate matter	Sulfur oxides	Nitrogen dioxide	Carbon monoxide	Ozone
Billings Intrastate	II	II	III	III	III
Great Falls Intrastate	III	IA	III	III	III
Helena Intrastate	IA	IA	III	III	III
Miles City Intrastate	III	III	III	III	III
Missoula Intrastate	I	III	III	III	III

[37 FR 10877, May 31, 1972, as amended at 45 FR 14043, Mar. 4, 1980]

§ 52.1372 Approval status.

With the exceptions set forth in this subpart, the Administrator approves Montana's plans for the attainment and maintenance of the national standards under section 110 of the Clean Air Act. Furthermore, the Administrator finds the plans satisfy all requirements of Part D, Title I, of the Clean Air Act as amended in 1977, except as noted below.

[45 FR 2036, Jan. 10, 1980]

§ 52.1373 Control strategy: Sulfur oxides.

(a) *Part D—Conditional Approval*—The East Helena plan is approved provided that the following conditions are met by May 1, 1981:

(1) A field study will be performed in the vicinity of the ASARCO smelter complex which clearly demonstrates the stack height for the blast furnace stack which represents good engineering practice; and

(2) The control strategy will be amended, if necessary, to demonstrate attainment of the national standards using the good engineering practice stack height determined through the field study.

[45 FR 76688, Nov. 20, 1980]

§ 52.1374 [Reserved]

§ 52.1375 Attainment dates for national standards.

The attainment date for the secondary NAAQS for sulfur dioxide for East Helena is December 31, 1982.

[61 FR 16061, Apr. 11, 1996]

§ 52.1376 Extensions.

On October 7, 1993, EPA granted the request by the State for the full three years allowed by section 172(b) of the CAA, as amended in 1990, for submittal of the SIP for the East Helena area to attain and maintain the sulfur dioxide secondary NAAQS. Therefore, the SIP for the area was due November 15, 1993.

The SIP was not submitted by that date.

[61 FR 16062, Apr. 11, 1996]

§ 52.1377 [Reserved]

§ 52.1378 General requirements.

(a) The requirements of § 51.116(c) of this chapter are not met since the legal authority to provide for public availability of emission data is inadequate.

(b) Regulation for public availability of emission data. (1) Any person who cannot obtain emission data from the Agency responsible for making emission data available to the public, as specified in the applicable plan, concerning emissions from any source subject to emission limitations which are part of the approved plan may request that the appropriate Regional Administrator obtain and make public such data. Within 30 days after receipt of any such written request, the Regional Administrator shall require the owner or operator of any such source to submit information within 30 days on the nature and amounts of emissions from such source and any other information as may be deemed necessary by the Regional Administrator to determine whether such source is in compliance with applicable emission limitations or other control measures that are part of the applicable plan.

(2) Commencing after the initial nonecessary by the Regional Administrator pursuant to paragraph (b)(1) of this section, the owner or operator of the source shall maintain records of the nature and amounts of emissions from such source and any other information as may be deemed necessary by the Regional Administrator to determine whether such source is in compliance with applicable emission limitations or other control measures that are part of the plan. The information recorded shall be summarized and reported to the Regional Administrator, on forms furnished by the Regional Administrator, and shall be submitted within 45 days after the end of the reporting period. Reporting periods are January 1 to June 30 and July 1 to December 31.

(3) Information recorded by the owner or operator and copies of this summarizing report submitted to the Regional Administrator shall be retained by the owner or operator for 2 years after the date on which the pertinent report is submitted.

(4) Emission data obtained from owners or operators of stationary sources will be correlated with applicable emission limitations and other control measures that are part of the applicable plan and will be available at the appropriate regional office and at other locations in the state designated by the Regional Administrator.

[39 FR 34536, Sept. 26, 1974, as amended at 40 FR 55331, Nov. 28, 1975; 51 FR 40676, Nov. 7, 1986]

§ 52.1379 Legal authority.

(a) The requirements of § 51.230(f) of this chapter are not met, since section 69–3918 of the Montana Clean Air Act could, in some circumstances prohibit the disclosure of emission data to the public. Therefore, section 69–3918 is disapproved.

[39 FR 34536, Sept. 26, 1974, as amended at 51 FR 40676, Nov. 7, 1986]

§§ 52.1380—52.1381 [Reserved]

§ 52.1382 Prevention of significant deterioration of air quality.

(a) The Montana plan, as submitted, is approved as meeting the requirements of Part C, Subpart 1 of the Clean Air Act, except that it does not apply to sources proposing to construct on Indian Reservations.

(b) Regulation for preventing of significant deterioration of air quality. The provisions of § 52.21 (b) through (w) are hereby incorporated by reference and made a part of the Montana State Implementation Plan and are applicable to proposed major stationary sources or major modifications to be located on Indian Reservations.

(c)(1) Except as set forth in this paragraph, all areas of Montana are designated Class II.

(2) The Northern Cheyene Indian Reservation is designated Class I.

(3) The Flathead Indian Reservation is designated Class I.

(4) The Fort Peck Indian Reservation is designated Class I.

[42 FR 40697, Aug. 11, 1977, as amended at 47 FR 23928, June 2, 1982; 48 FR 20233, May 5, 1983; 49 FR 4735, Feb. 8, 1984; 53 FR 48645, Dec. 2, 1988; 55 FR 19262, May 9, 1990; 55 FR 22333, June 1, 1990]

§ 52.1384 Emission control regulations.

(a) [Reserved]

(b) The provisions for the open burning of creosote-treated railroad ties in the Administrative Rules of Montana (ARM) 16.8.1302 and 16.8.1307, which were submitted by the Governor on April 9, 1991, are disapproved because:

(1) The regulations do not adequately demonstrate how public health and welfare will be protected, in direct conflict with section 75–2–102 of the Montana Clean Air Act, as approved in the SIP;

(2) The regulations do not satisfy the enforcement imperatives of section 110(a)(2) of the Clean Air Act, which require that a plan contain enforceable emission limitations and a program for determining compliance; and

(3) The revised regulations relax the control of emissions without any accompanying analysis demonstrating that these relaxations will not interfere with attainment and maintenance of the PM–10 national ambient air quality standards, and without any accompanying analysis demonstrating the potential impact on PM–10 nonattainment areas in the State and whether equivalent or greater emission reductions are insured in such areas, per the requirements of sections 110(1) and 193 of the amended Clean Air Act.

(c) The provisions in ARM 16.8.1425(1)(c) and (2)(d) of the State's rule regulating hydrocarbon emissions from petroleum products, which were submitted by the Governor of Montana on May 17, 1994 and which allow discretion by the State to allow different equipment than that required by this rule, are disapproved. Such discretion cannot be allowed without requiring EPA review and approval of the alternative equipment to ensure that it is equivalent in efficiency to that equipment required in the approved SIP.

[57 FR 57347, Dec. 4, 1992, as amended at 57 FR 60486, Dec. 21, 1993; 60 FR 36722, July 18, 1995]

§ 52.1385 Source surveillance.

(a) Part D—Conditional Approval—The requirements of section 110 of the Clean Air Act are not met since the State does not specify source testing procedures in many of its emission limitations. However, this section is approved provided the State submits a list of acceptable source test methods for each emission limitation by August 1, 1980.

[45 FR 62985, Sept. 23, 1980]

§ 52.1386 [Reserved]

§ 52.1387 Visibility protection.

(a) The requirements of section 169A of the Clean Air Act are not met because the plan does not include approvable procedures for protection of visibility in mandatory Class I Federal areas.

(b) *Long-term strategy*. The provisions of § 52.29 are hereby incorporated into the applicable plan for the State of Montana.

[52 FR 45138, Nov. 24, 1987]

§ 52.1388 Stack height regulations.

The State of Montana has committed to revise its stack height regulations should EPA complete rulemaking to respond to the decision in *NRDC v. Thomas*, 838 F. 2d 1224 (D.C. Cir. 1988). In a letter to Douglas M. Skie, EPA, dated May 6, 1988, Jeffrey T. Chaffee, Chief, Air Quality Bureau, stated:

> * * * We are submitting this letter to allow EPA to continue to process our current SIP submittal with the understanding that if EPA's response to the NRDC remand modifies the July 8, 1985 regulations, EPA will notify the State of the rules that must be changed to comply with the EPA's modified requirements. The State of Montana agrees to make the appropriate changes.

[54 FR 24341, June 7, 1989. Redesignated at 55 FR 19262, May 9, 1990]

§ 52.1389 Small business stationary source technical and environmental compliance assistance program.

The Governor of Montana submitted on October 19, 1992, a plan to develop and implement a Small Business Stationary Source Technical and Environmental Compliance Assistance Program to meet the requirements of section 507 of the Clean Air Act by November 15, 1994. The plan commits to provide technical and compliance assistance to small businesses, hire an Ombudsman to serve as an independent advocate for small businesses, and establish a Compliance Advisory Panel to advise the program and report to the EPA on the program's effectiveness.

[59 FR 10286, Mar. 4, 1994]

§ 52.1390 Missoula variance provision.

The Missoula City-County Air Pollution Control Program's Chapter X, Variances, which was adopted by the Montana Board of Health and Environmental Sciences on June 28, 1991 and submitted by the Governor of Montana to EPA in a letter dated August 20, 1991, is disapproved. This rule is inconsistent with section 110(i) of the Clean Air Act, which prohibits any State or EPA from granting a variance from any requirement of an applicable implementation plan with respect to a stationary source.

[59 FR 64139, Dec. 13, 1994]

Subpart CC—Nebraska

§ 52.1420 Identification of plan.

(a) Title of plan: ''Air Quality Implementation Plan for the State of Nebraska.''

(b) The plan was officially submitted on January 28, 1972.

(c) The plan revisions listed below were submitted on the dates specified.

(1) Request submitted by the Governor on January 24, 1972, for a two-year extension in order to meet the primary standard for NOx in the Omaha-Council Bluffs AQCR. (Non-regulatory)

(2) Clarification of section 11 of the State plan submitted on February 16, 1972 by the Nebraska Department of Environmental Control. (Non-regulatory)

(3) A confirmation that the State does not have air quality control standards based on the enclosed disapproval of the State Attorney General was submitted on April 25, 1972 by the Nebraska Department of Environmental Control. (Non-regulatory)

(4) Revision of Rules 3 through 18 and Rule 21 and 22 submitted on June 9, 1972, by the Governor.

(5) Amendments to the Omaha Air Pollution Control Ordinance 26350 submitted on June 29, 1972, by the Governor.

(6) Letters submitted September 26 and 27, 1972, from the State Department of Environmental Control revising Rule 3 and Rule 5 of the State Rules and Regulations.

(7) Letters clarifying the application of the State emergency episode, rule 22(a), submitted October 2, 1972, by the State Department of Environmental Control. (Non-regulatory).

(8) Revision of the State air regulations to expand emission limitations to apply State-wide, change procedures for preconstruction review of new sources, change procedures for disapproving construction permits for new or modified sources and add new sulfur oxide emission standards was submitted on February 27, 1974, by the Nebraska Department of Environmental Control.

(9) Copy of the State's analysis of ambient air quality in Standard Metropolitan Statistical Areas in the State and recommendations for designation of Air Quality Maintenance Areas submitted by the Department of Environmental Control on May 9, 1974. (Non-regulatory)

(10) Compliance schedules were submitted by the Department of Environmental Control on September 13, 1974.

(11) Compliance schedules were submitted by the Department of Environmental Control on February 21, 1975.

(12) Compliance schedules were submitted by the Department of Environmental Control on May 23, 1975.

(13) Revision of regulations to include the second group of New Source Performance Standards and provide for granting of post-attainment variances and releasing of emission data was submitted on August 5, 1975, by the Governor.

(14) Compliance schedules were submitted by the Governor on August 27, 1975.

(15) Compliance schedules were submitted by the Governor on January 1, 1976.

(16) Compliance schedules were submitted by the Department of Environmental Control on January 15, 1976.

(17) Amended State law (LB1029) giving the Department of Environmental Control authority to require monitoring of emissions, require reporting of emissions and release emission data was submitted by the Governor on February 10, 1976.

(18) Compliance schedules were submitted by the Governor on April 23, 1976.

(19) Compliance schedules were submitted by the Governor on October 27, 1976.

(20) Revised Rule 17, requiring continuous opacity monitoring by power plants, was submitted on November 2, 1976, by the Governor.

(21) A plan revision to meet the requirements of 40 CFR 58.20, dealing with statewide air quality monitoring and data reporting, was submitted by the Governor on June 19, 1981.

(22) Revised Rule 13, granting an increase in the visible emission limitations for existing teepee waste wood burners and alfalfa dehydrators, was submitted by the Governor on December 29, 1977.

(23) Revision to the SIP concerning the adoption of the Lancaster County Air Pollution Control Resolution was submitted by the Governor on April 4, 1977.

(24) Revision to the SIP concerning the adoption of the revised local air pollution control ordinances for the cities of Omaha and Lincoln was submitted by the Governor on December 27, 1977.

(25) State plan revisions and corrections thereto to attain the National Ambient Air Quality Standards for total suspended particulate in Douglas and Cass Counties, designated as nonattainment under section 107 of the Clean Air Act Amendments of 1977, were submitted by the Governor on September 25, 1980, and on August 9, 1982. Included in the plan are revised Rule 6, and new Rule 5A.

(26) New Rule 18, ''Compliance; Exceptions Due to Startup, Shutdown, or Malfunction,'' was submitted by the Governor on August 9, 1982.

(27) A plan revision to provide for Intergovernmental Consultation and Coordination and for Public Notification was submitted to EPA by the Governor of Nebraska on August 9, 1982.

(28) A plan revision for attaining and maintaining the National Ambient Air Quality Standard for Lead in the State of Nebraska was submitted to EPA on January 9, 1981, by the Governor. Additional material was submitted by the State on August 5, 1981 and January 11, 1983. All portions of the submittals are approved except the control strategy for Omaha and the request for a two year extension to attain the lead standard in Omaha.

(29) Revisions to Rule 1, ''Definitions,'' and to Rule 4, ''New and Complex Sources; Standards of Performance, Application for Permit, When Required;'' and a new regulation: Rule 4.01, ''Prevention of Significant Deterioration of Air Quality,'' were submitted by the Governor on May 23, 1983; clarifying letter dated May 30, 1984.

(30) On July 24, 1984, Nebraska submitted a lead SIP for Omaha. Additional portions of the Omaha lead SIP were submitted by the State on November 17, 1983, and August 1, 1984. EPA withheld action on the enforceable control measures contained in the Omaha lead SIP, but approved all other portions.

(31) Revisions to Chapter 10 ''Incinerators; Emission Standards;'' Chapter 12 ''Sulfur Compound Emissions; Emission Standards;'' Chapter 14 ''Open Fires, Prohibited; Exceptions;'' and Chapter 20 ''Emission Sources; Testing: Monitoring'' were submitted by the Governor on October 6, 1983.

(32) Revisions to Chapter 1, ''Definitions''; Chapter 4, ''Reporting and Operating Permits for Existing Sources; When Required''; and Chapter 5, ''New, Modified, and Reconstructed Sources; Standards of Performance, Application for Permit, When Required'', were submitted by the Governor on October 6, 1983. These revisions deleted the review requirements for complex sources of air pollution for the entire State.

These review requirements were adopted by the State on February 22, 1974 (submitted on February 27, 1974) and were approved by EPA on September 9, 1975. See paragraph (c)(8) above. Approval action was taken on the deletion of these requirements except as they pertain to the Lincoln and Omaha CO nonattainment areas.

(33) A State Implementation Plan revision to provide for attainment of the carbon monoxide standard in Omaha was submitted by Governor Kerrey on April 3, 1985. Action was also taken to delete review requirements for complex sources of air pollution in Omaha; see paragraph (c)(32) of this section.

(i) Incorporation by reference.

(A) An RFP curve from page 27 of the Carbon Monoxide State Implementation Plan for Omaha, Nebraska, dated January 18, 1985.

(ii) Additional material.

(A) Narrative submittal entitled ''Carbon Monoxide State Implementation Plan for Omaha, Nebraska'', including an attainment demonstration.

(B) Emission Inventory for carbon monoxide sources.

(34) A State Implementation Plan revision to provide for attainment of the carbon monoxide standard in Lincoln was submitted by Governor Kerrey on April 3, 1985. Action was also taken to delete review requirements for complex sources of air pollution in Lincoln; see paragraph (c)(32) of this section.

(i) Incorporation by reference.

(A) An RFP table from page 18 of the State Implementation Plan Revision for Carbon Monoxide for Lincoln, Nebraska, adopted on March 1, 1985.

(ii) Additional material.

(A) Narrative submittal entitled, ''State Implementation Plan Revision for Carbon Monoxide for Lincoln, Nebraska'', including an attainment demonstration.

(B) Emission Inventory for carbon monoxide sources.

(35) On February 2, 1987, Nebraska submitted revisions to the lead SIP for Omaha. The revisions contained a revised demonstration of attainment of the lead standard in Omaha, a revised control strategy to provide the lead emission reductions claimed in the demonstration of attainment, and Administrative Order No. 753 dated August 22, 1985, as amended by Amended Administrative Order No. 753 dated May 9, 1986, and by Second Amended Administrative Order No. 753 dated November 12, 1986. All items in the revisions were approved.

(i) Incorporation by reference.

(A) Administrative Order 753 dated August 22, 1985, issued by the Nebraska Department of Environmental Control to ASARCO Incorporated.

(B) Amended Administrative Order 753 dated May 9, 1986, issued by the Nebraska Department of Environmental Control to ASARCO Incorporated.

(C) Second Amended Administrative Order 753 dated November 12, 1986, issued by the Nebraska Department of Environmental Control to ASARCO Incorporated.

(ii) Additional material.

(A) 1986 Revised Demonstration of Attainment and Control Measures for the Nebraska State Implementation Plan for Lead—Omaha, submitted by ASARCO Incorporated, October 3, 1986.

(36) Revisions to Chapter 1, ''Definitions'', paragraphs 024, 025, 030, 037, 049; and Chapter 5, ''Stack Heights: Good Engineering Practice (GEP)'', were submitted by the Governor on May 6, 1986.

(i) Incorporation by reference.

(A) Revisions to Chapter 1, ''Definitions'', paragraphs 024, 025, 030, 037, 049; and Chapter 5, ''Stack Heights: Good Engineering Practice (GEP)'', effective May 5, 1986.

(ii) Additional material.

(A) None.

(37) Revised Title 129 of Nebraska Air Pollution Control rules and regulations pertaining to PM_{10} and other rule revisions submitted by the Governor of Nebraska on June 15, 1988.

(i) Incorporation by reference. (A) Nebraska Department of Environmental Control Title 129—Nebraska Air Pollution Control rules and regulations adopted by the Nebraska Environmental Control Council February 5, 1988, effective June 5, 1988. The following Nebraska rules are not approved: Chapter 1, definition at *013*, ''Best Available Control Technology''; Chapter 4, section *004.01G*, except as it applies to lead; Chapter 6, section *002.04* and section 007; Appendix III except for lead; Chapter 6, section *001* pertaining

to NSPS; and Chapter 12 pertaining to NESHAP.

(B) Nebraska Department of Environmental Control Title 115—Rules of Practice and Procedure, amended effective July 24, 1987.

(ii) Additional information. (A) None.

(38) Plan revisions were submitted by the Nebraska Department of Environmental Control on March 8, 1991, which implement EPA's October 17, 1988, PSD NO_x requirements.

(i) Incorporation by reference.

(A) Revisions to title 129, chapter 7, entitled ''Prevention of Significant Deterioration of Air Quality,'' were adopted by the Nebraska Enviromental Control Council on December 7, 1990, and became effective February 20, 1991.

(ii) Additional material.

(A) Letter from the state submitted March 8, 1991, pertaining to NO_x rules and analysis which certifies the material became effective on February 20, 1991.

(39) Plan revisions were submitted by the Governor of Nebraska on March 8, 1991.

(i) Incorporation by reference.

(A) Revisions to Nebraska Department of Environmental Control Title 129—Nebraska Air Pollution Control Rules and Regulations adopted by the Nebraska Environmental Control Council December 7, 1990, effective February 20, 1991. Revisions to the following sections are approved in this action: Chapter 1 (deletion of section 068), chapter 3 (deletion of ''National'' from the chapter title), chapter 4 (section 004.02), chapter 7 (section 001), chapter 10 (section 002), chapter 11 (section 002 and section 005), chapter 15 (section 002.07C), and chapter 16 (sections 001, 002.01, 002.02, and 002.03.)

(40) The Nebraska Department of Environmental Quality submitted the Small Business Assistance program State Implementation Plan revision on November 12, 1992.

(i) Incorporation by reference.

(A) Revision to the Nebraska State Implementation Plan for the Small Business Stationary Source Technical and Environmental Compliance Assistance Program was adopted by the state of Nebraska on November 12, 1992, and became effective on the same date.

(41) On February 16, 1994, the Director of the Nebraska Department of Environmental Quality submitted revisions to the State Implementation Plan (SIP) to create a Class II operating permit program, Part D NSR rule changes, SO_2 rule corrections, and the use of enhanced monitoring.

(i) Incorporation by reference.

(A) Revised rules ''Title 129—Nebraska Air Quality Regulations,'' effective December 17, 1993. This revision approves all chapters except for parts of Chapters 5, 7, 8, 9, 10, 11, 12, 13, 14, and 15 that pertain to Class I permits; Chapter 17 as it relates to hazardous air pollutants; and excludes Chapters 23, 25, 26, 27, 28, 29, and 31.

(B) ''Title 115—Rules of Practice and Procedure,'' effective August 8, 1993, and submitted as an SIP revision on February 16, 1994.

(ii) Additional material.

(A) Letter from Nebraska to EPA Region VII dated February 16, 1994, regarding a commitment to submit information to the RACT/BACT/LAER Clearinghouse as required in section 173(d) of the Clean Air Act.

(B) Letter from Nebraska to EPA Region VII dated June 10, 1994, regarding the availability of state operating permits to EPA and specified emissions limitations in permits.

(C) Letter from Nebraska to EPA Region VII dated November 7, 1994, regarding the increase in New Source Review (NSR) permitting thresholds.

(42) A Plan revision was submitted by the Nebraska Department of Environmental Quality on June 14, 1995, which incorporates by reference EPA's regulations relating to determining conformity of general Federal actions to State or Federal Implementation Plans.

(i) Incorporation by reference.

(A) A revision to title 129, adding chapter 40, entitled ''General Conformity'' was adopted by the Environmental Quality Council on December 2, 1994, and became effective on May 29, 1995.

(43) On June 14, 1995, the Director of the Nebraska Department of Environmental Quality submitted revisions to the State Implementation Plan (SIP) to modify the Class II operating permit program.

(i) Incorporation by reference.

(A) Revised rules ''Title 129—Nebraska Air Quality Regulations,'' effective May 29, 1995. This revision applies to chapters 5, 7, 12, 17, 19, 25, 41 and deletes chapters 42, 43 and 44.

(ii) Additional material.

(A) None.

(44) On May 31 and June 2, 1995, the Director of the Nebraska Department of Environmental Quality (NDEQ) submitted revisions to the SIP to update the local ordinances of the Lincoln-Lancaster County Health Department and city of Omaha, respectively, and to create Federally enforceable Class II operating permit programs for these agencies.

(i) Incorporation by reference.

(A) 1993 Lincoln-Lancaster County Air Pollution Control Program, Version March 1995, effective May 16, 1995. This includes the following citations: Article I (except Section 6); Article II, Sections 1–12, 14–17, 19–20, 22, 24–25, 32–38; and Appendix I.

(B) Ordinance No. 33102 dated November 2, 1993, which adopts Chapter 41, Article I, Sections 41–4 through 41–6; 41–9; 41–10; Article II, Sections 41–23; 41–27; 41–38; and 41–40 and Article IV of the Omaha Municipal Code. Ordinance No. 33506 dated March 21, 1995, amends Chapter 41, Article I, Sections 41–2 and 41–9 of the Omaha Municipal Code and adopts Title 129, Nebraska Air Quality Regulations, approved December 2, 1994.

(ii) Additional material.

(A) Letter from the city of Omaha dated September 13, 1995, regarding adequate authority to implement section 112(l).

(B) Letter from the NDEQ dated November 9, 1995, regarding rule omissions and PSD.

[37 FR 10877, May 31, 1972]

EDITORIAL NOTE: For FEDERAL REGISTER citations affecting § 52.1420, see the List of CFR Sections Affected in the Finding Aids section of this volume.

§ 52.1421 Classification of regions.

The Nebraska plan was evaluated on the basis of the following classifications:

Air quality control region	Pollutant				
	Particulate matter	Sulfur oxides	Nitrogen dioxide	Carbon monoxide	Photochemical oxidants (hydrocarbons)
Metropolitan Omaha-Council Bluffs Interstate	I	II	III	III	III
Lincoln-Beatrice-Fairbury Intrastate	II	III	III	III	III
Metropolitan Sioux City Interstate	III	III	III	III	III
Nebraska Intrastate	III	III	III	III	III

[37 FR 10877, May 31, 1972, as amended at 39 FR 16347, May 8, 1974]

§ 52.1422 Approval status.

With the exceptions set forth in this subpart, the Administrator approves Nebraska's plan for the attainment and maintenance of the national standards. No action is taken on the new source review regulations to comply with section 172(b)(6) and section 173 of the Clean Air Act as amended in 1977, and 40 CFR 51.18(j).

[37 FR 10877, May 31, 1972, as amended at 48 FR 12717, Mar. 28, 1983]

§ 52.1423 PM_{10} State implementation plan development in group II areas.

The state of Nebraska committed to conform to the PM_{10} regulations as set forth in 40 CFR part 51. In a letter to Morris Kay, EPA, dated February 5, 1988, Mr. Dennis Grams, Director, Nebraska Department of Environmental Control, stated:

(a) An area in the City of Omaha and the area in and around the Village of Weeping Water have been classified as Group II areas for the purpose of PM_{10} State Implementation Plan (SIP) development. The specific boundaries of these areas are identified in our letter of October 6, 1987, to Carl Walter. In accordance with the requirements for

PM_{10} SIP development, the State of Nebraska commits to perform the following PM_{10} monitoring and SIP development activities for these Group II areas:

(1) Gather ambient PM_{10} data, at least to the extent consistent with minimum EPA requirements and guidance.

(2) Analyze and verify the ambient PM_{10} data and report 24-hour exceedances of the National Ambient Air Quality Standard for PM_{10} to the Regional Office within 45 days of each exceedance.

(3) When an appropriate number of verifiable exceedances of the 24-hour standard occur, calculated according to section 2.0 of the PM_{10} SIP Development Guideline, or when an exceedance of the annual PM_{10} standard occurs, acknowledge that a nonattainment problem exists and immediately notify the Regional Office.

(4) Within 30 days of the notification referred to in paragraph (a)(3) of this section, or within 37 months of promulgation of the PM_{10} standards, whichever comes first, determine whether measures in the existing SIP will assure timely attainment and maintenance of the PM_{10} standards and immediately notify the Regional Office.

(5) Within 6 months of the notification referred to in paragraph (a)(4) of this section, adopt and submit to EPA a PM_{10} control strategy that assures attainment as expeditiously as practicable but no later than 3 years from approval of the committal SIP.

An emission inventory will be compiled for the identified Group II areas. If either area is found to be violating the PM_{10} standards, the inventory will be completed as part of the PM_{10} SIP for that area on a schedule consistent with that outlined in paragraphs 3, 4, and 5. If the PM_{10} standards are not violated, the inventory will be completed not later than July 1, 1989, and submitted to EPA not later than August 31, 1990, as part of the determination of adequacy of the current SIP to attain and maintain the PM_{10} air quality standards.

(b) We request that the total suspended particulate nonattainment areas in Omaha and Weeping Water (all secondary nonattainment) and Louisville (Primary nonattainment) be redesignated to unclassifiable.

[54 FR 21063, May 16, 1989]

§ 52.1424 Operating permits.

Emission limitations and related provisions which are established in Nebraska operating permits as Federally enforceable conditions shall be enforceable by EPA. The EPA reserves the right to deem permit conditions not Federally enforceable. Such a determination will be made according to appropriate procedures and be based upon the permit, permit approval procedures, or permit requirement which do not conform with the operating permit program requirements or the requirements of EPA underlying regulations.

[61 FR 4901, Feb. 9, 1996]

§ 52.1425 Compliance schedules.

(a) The compliance schedules for the sources identified below are approved as revisions to the plan pursuant to § 51.104 and subpart N of this chapter. All regulations cited are air pollution control regulations of the State, unless otherwise noted.

NEBRASKA—COMPLIANCE SCHEDULES

Source	Location	Regulation involved	Date adopted	Variance expiration date	Final compliance date
ASARCO, Inc	Omaha, NE	Nebraska DEC Second Amended Administrative Order No. 753.	Nov. 12, 1986	Not applicable	Feb. 1, 1988

[41 FR 22350, June 3, 1976, as amended at 41 FR 52456, Nov. 30, 1976; 42 FR 16140, Mar. 25, 1977; 50 FR 4512, Jan. 31, 1985; 51 FR 40675, 40676, Nov. 7, 1986; 52 FR 28696, Aug. 3, 1987; 54 FR 25259, June 14, 1989]

§ 52.1426 [Reserved]

§ 52.1427 Operating permits.

Emission limitations and related provisions which are established in the city of Omaha and Lincoln-Lancaster operating permits as Federally enforceable conditions shall be enforceable by EPA. The EPA reserves the right to deem permit conditions not Federally enforceable. Such a determination will be made according to appropriate procedures and be based upon the permit, permit approval procedures, or permit requirement which do not conform with the operating permit program requirements or the requirements of EPA underlying regulations.

[61 FR 5701, Feb. 14, 1996]

§§ 52.1428—52.1435 [Reserved]

§ 52.1436 Significant deterioration of air quality.

The requirements of sections 160 through 165 of the Clean Air Act are met except as noted below.

EPA is retaining § 52.21 (b) through (w) as part of the Nebraska SIP for the following types of sources:

(a) Sources proposing to construct on Indian lands in Nebraska; and,

(b) Enforcement of permits issued by EPA prior to the July 28, 1983, delegation of authority to Nebraska.

[49 FR 29599, July 23, 1984]

Subpart DD—Nevada

§ 52.1470 Identification of plan.

(a) Title of plan: ''Air Quality Implementation Plan for the State of Nevada.''

(b) The plan was officially submitted on January 28, 1972.

(c) The plan revisions listed below were submitted on the dates specified.

(1) Errata sheet to the plan was submitted on April 26, 1972, by the Division of Health.

(2) Washoe County regulations submitted on June 12, 1972, by the Governor.

(3) Compliance schedules submitted on July 14, 1972, by the Governor.

(4) Legal opinions concerning the plan submitted on November 17, 1972, by the Office of the Attorney General.

(5) Amended Clark County regulations submitted on January 19, 1973, by the Governor.

(6) Amendments to the Nevada Air Quality Regulations NAQR to regulate construction of complex sources (Article 13) submitted on April 1, 1974, by the Governor.

(7) Amendments to the NAQR to regulate sulfur emissions from nonferrous smelters; (Article 8.1); to regulate and monitor visible emissions from stationary sources (Article 4); and to allow supplementary control systems (Article 14); submitted on June 14, 1974, by the Governor.

(8) Amendments to the NAQR to regulate open burning (Article 5.2.3 and 5.2.4), and to regulate the construction of complex sources (Article 13), submitted on November 12, 1974, by the Governor.

(9) Administrative procedures for the review of complex sources submitted on December 11, 1974, by the Governor's representative.

(10) Amendments to the Nevade Revised Statutes (NRS) (1975 Legislative Session) on motor vehicle inspection and testing (NRS 445.640, 445.700, 482.640 and 169.125), public availability of emission data (NRS 445.576), organization (NRC 445.481 and 481.——). (Section 1 of 1975 Assembly Bill 326), stack testing (NRS 445.447), and alleged violations (NRS 445.526) submitted on September 10, 1975 by the Governor.

(11) Amendments to the NAQR, as amended through September 18, 1975, submitted on October 31, 1975, by the Governor, as follows:

Article 1—Definitions: 1.6–1.13, 1.15–1.33, 1.35–1.69;

Article 2—General Provisions: 2.4.1–2.4.4, 2.5.1, 2.5.2, 2.5.4, 2.6.1–2.6.4, 2.7.1, 2.8.1, 2.8.4, 2.8.5.1, 2.9.1–2.9.3, 2.9.5–2.9.7, 2.10.1.2, 2.10.2–2.10.4, 2.11.4.2;

Article 3—Registration Certificates and Operating Permits: 3.1.3, 3.1.5, 3.1.6, 3.1.8a & d-i, 3.1.9, 3.2.2–3.2.6, 3.3.2, 3.3.5, 3.4.1, 3.4.6–3.4.14;

Article 4—Visible Emissions From Stationary Sources: 4.1, 4.2, 4.3.5, 4.4–4.4.2;

Article 5—Open Burning: 5.2.3, 5.2.4;

Article 6—Incinerator Burning: 6.3–6.6.2;

Article 7—Particulate Matter: 7.1.3, 7.2.1–7.2.3, 7.3.1–7.3.3;

Article 8—Sulfur Emissions: 8.1.1, 8.1.2, 8.1.4, 8.2.2.1, 8.3–8.4;

Article 9—Organic Solvent, Other Volatile Compounds: 9.1, 9.2–9.2.1.1, 9.2.2, 9.2.3;

Article 10—Odors: 10.2.1.1, 10.2.1.2;
Article 11—Mobile Equipment: 11.3–11.7.1, 11.7.4–11.7.5, 11.10, 11.10.1, 11.11–11.14.17.

(12) Amendments to miscellaneous Nevada air quality control regulations and to other sections of the State plan submitted on December 10, 1976, by the Governor, as follows:

Article 1—Definitions: 1.1–1.213;
Article 2—General Provisions: 2.5.3, 2.6.2–2.6.9, 2.7.1–2.7.4, 2.8.5.2, 2.16, 2.17;
Article 3—Registration Certificates and Operating Permits, 3.1.9.1, 3.2.1;
Article 7—Particulate Matter: 7.2.4;
Article 8—Sulfur Emissions: 8.2.2–8.2.4;
Article 11—Mobile Equipment: 11.7.6, 11.8, 11.9, 11.10.2;
Section 3—Air quality data: 3.2;
Section 4—Emissions summary: 4.2;
Section 5—Control strategy: 5.1, table 5.1, table 5.2;
Section 10—Air quality surveillance network: Monitoring network table, sampling sites modification table.

(13) Amendments to the NAQR and the control strategy submitted on October 7, 1976, by the Governor.

(i) Article 7—Particulate Matter: 7.2.7; Table 4.2—Emissions Inventory Summary for Particulates.

Table 5.2—Summary of Control Strategy Analysis for Particulates.

(14) The following amendments to the plan were submitted on December 29, 1978, by the Governor.

(i) Nevada State Emergency Episode Plan Sections: 6.1.4, 6.1.5, 6.5.2.2; Tables: 6.1, 6.2 (Stages 1, 2, and 3), 6.3; Air Pollution Episode Notice; Episode Communication Checklist.

(ii) Nevada Revised Statutes Policy Declarations; Definitions:

445.401, 445.406, 445.411, 445.416, 445.421, 445.424, 445.427, 445.431, 445.441, 445.446; State Environmental Commission: 445.451, 445.456, 445.461, 445.466, 445.471, 445.472, 445.473, 445.474, 445.476; Local Hearing Boards: 445.486; Enforcement Provisions: 445.491, 445.496, 445.497, 445.498, 445.499, 445.501; Variances: 445.506, 445.511, 445.516, 445.521; Hearings, Orders Respecting Violations: 445.529; Local Air Pollution Control Programs: 445.546, 445.551, 445.556, 445.561, 445.566; Miscellaneous Provisions: 445.571, 445.581, 445.586, 445.596, 445.598; Penalties: 445.601; Deletions: Senate Bill 275, Sections 8.5, 17(1–4, 6, 7), 27, 38.

(iii) Nonattainment area plans for Mason Valley/Fernley Area, Lander County, Carson Desert, Winnemucca Segment, Truckee Meadows, and Las Vegas Valley.

(iv) Nevada Revised Statutes, Engine Emission Controls:

445.610, 445.620, 445.625, 445.630, 445.640, 445.650, 445.660, 445.670, 445.680, 445.690, 445.700, 445.705, and 445.710.

(v) Nevada Air Quality Regulations for Mobile Equipment:

Article 1—Sections 1.1 to 1.38; Article 2—Sections 2.1 to 2.2; Article 3—Sections 3.1 to 3.14.6; and Article 4—Sections 4.1 to 4.20.

(vi) Nevada Revised Statute 445.493, Limitations on Enforcement of Regulations as to Indirect Sources and Authority to Review New Indirect Sources.

(vii) Amendments to the Nevada Air Quality Regulations:

Article 1, Rules 1.44, 1.53, 1.60, 1.98.1; Article 2, Rules 2.2.2, 2.11.7, 2.17.3.2 a/b, 2.17.4, 2.17.4.1, 2.17.9.8, 2.17.10, 2.17.10.1; Article 3, Rules 3.1.1, 3.1.2, 3.1.3, 3.4.11; Article 4, Rule 4.3.[6]4; Article 5, Rule 5.2.4; Article 6, Rule 6.3; Article 7 Rules 7.1.[3]2, 7.3.3; Article 8, Rules 8.2.1.1, 8.2.1.2, 8.2.2, and Article 12, Rule 12.1.

(viii) Amendments to the Nevada Air Quality Regulations:

Article 1; Article 7, Rules 7.2.8.1—7.2.8.3; Article 16, Rules 16.3.1.2—16.3.3 and Rules 16.15.1—16.15.4.

(15) Redesignation of the Clark-Mohave Interstate AQCR submitted on March 23, 1979, by the Governor.

(16) The following amendments to the plan were submitted on July 24, 1979, by the Governor.

(i) Amendments to the Nevada Air Quality Regulations:

Article I—Definition: No. 2—LAER.

(ii) Amendments to the Clark County District Board of Health Air Pollution Control Regulations:

Section 15—Source Registration, 15.1, 15.2, 15.3, 15.4, 15.5, 15.6, 15.7, 15.8, 15.9, 15.10, 15.11, and 15.12; Section 50—Storage of Petroleum Products; Section 51—Petroleum Product Loading into Tank Trucks, and Trailers; and Section 52—Handling of Gasoline at Service Stations, Airports and Storage Tanks.

(iii) Amendments to the Washoe County District Board of Health Air Pollution Control Regulations:

Definitions, Sections 010.011, 010.014, 010.028, 010.057, 010.059, 010.071, 010.072, 010.091, 010.106, 010.107B, 010.108, 010.116, 010.117, 010.136, 010.148, 010.149, 010.151, 010.166, 010.197,

and 010.1751; Source Registration and Operation, Sections 030.000, 030.005, 030.010, 030.015, 030.025, 030.030, 030.110, 030.115 (1 and 5)B, 030.120, 030.1201, 030.205, 030.210, 030.215, 030.245, and 030.250; Section 040.070—Storage of Petroleum Products; Section 040.075—Gasoline Loading into Tank Trucks and Trailers; Section 040.080—Gasoline unloading from Tank Trucks and Trailers into Storage Tanks; Section 040.085—Organic Solvents; and Section 040.090—Cut-Back Asphalt.

(iv) Paving schedules for the following Nonattainment Area Plans: Mason Valley/Fernley Area, Carson Desert, Winnemucca Segment, and Lander County.

(v) Amendments to the Las Vegas Valley Nonattainment Area Plan: Two memoranda of understanding between Clark County, the Health District, and the Transportation Policy Committee.

(vi) Nevada Revised Statutes, Engine Emission Control: 445.632, 445.634, 445.635, and 445.644.

(vii) Lake Tahoe Basin Nonattainment Area Plan.

(viii) Amendments to the Clark County District Board of Health Air Pollution Control Regulations:

Section 2, Rules 2.1, 2.2, 2.3; Section 3, Rule 3.1; Section 4, Rules 4.1—4.11; Section 5, Rule 5.1; Section 6, Rule 6.1; Section 7, Rules 7.1—7.19; Section 8, Rules 8.1, 8.2, 8.7 (deletion); Section 9, Rules 9.1—9.3; Section 10; Section 16, Rules 16.1,—16.5, 16.6 (Operating Permits), 16.6 (Emission of Visible Air Contaminants) (deletion), 16.7—16.9; Section 17, Rules 17.1.—17.8; Section 18, Rules 18.1—18.12; Section 23, Rules 23.1—23.5; Section 24, Rules 24.1—24.5; Section 25, Rules 25.1, 25.2, 25.4 (deletion); Section 26, Rules 26.1—26.3; Section 27, Rules 27.1, 27.2, 27.3, 27.4; Section 28, Rules 28.1, 28.2; Section 29; Section 30, Rules 30.1—30.7; Section 31; Section 32, Rules 32.1, 32.2; Section 40, Rule 40.1; Section 41, Rules 41.1—41.4; Section 42, Rules 42.1—42.4; Section 43, Rule 43.1; Section 70, Rules 70.1—70.6; Sections 80, and 81.

EDITORIAL NOTE: At 47 FR 27071, June 23, 1982, the following paragraph (c)(16)(viii) was added to § 52.1470.

(viii) Repeal and removal of all references to Indirect (Complex) Sources in the following rules or portions of rules in the Nevada Air Quality Regulations.

Article 1—Definitions: 1.12, 1.95, 1.147(b), and 1.202. Article 2—Registration Certificates and Operating Permits: 3.1.9, 3.2.1, 3.2.2, and 3.2.5. Article 13—Point Sources: 13.1.1, 13.1.2, 13.2, and 13.2.1 to 13.5.3.

(ix) Amendments to the Washoe County District Board of Health Air Pollution Control Regulations:

Sections 020.055, 030.300, 030.305, 030.310, 030.3101–030.3105, 030.3107, and 030.3108 and the following deletions: 010.115, 050.005, 050.010, 050.015, 050.020, 050.025, 050.030, and 050.035.

(x) Amendments to the Nevada Air Quality Regulations: Article 12, Lead (Pb).

(17) The following amendments to the plan were submitted on September 18, 1979, by the Governor.

(i) Amendments to the Clark County District Board of Health Air Pollution Control Regulations:

Section 1—Definitions (except 1.14, 1.15, 1.79, and 1.94); Section 15.14—Source Registration Requirements for Areas Exceeding Air Quality Standards; and Section 60—Evaporation and Leakage.

(ii) Amendments to the Clark County District Board of Health Air Pollution Control Regulations:

Section 1, Rules 1.79, 1.94; Section 11, Rules 11.1, 11.1.1–11.1.8, 11.2, 11.2.1–11.2.3, 11.3, 11.3.1, 11.3.2, 11.4, and Section 13, Rule 13.5 (deletion).

(18) Amendments to the Nevada Air Quality Regulations submitted on March 17, 1980, by the Governor.

(i) Article 13.1.3—Point Sources and Registration Certificates.

(19) The following amendments to the plan were submitted on June 24, 1980, by the Governor.

(i) Section 10—State of Nevada Ambient Air Quality Monitoring and Surveillance.

(ii) Amendment to the Nevada Air Quality Regulations: Article 4, Rule 4.3.6.

(iii) Clark County, Nevada Lead SIP.

(20) The following amendment to the plan was submitted on August 19, 1980 by the Governor.

(i) Request for Extension of the Carbon Monoxide Attainment Date for the Truckee Meadows Nonattainment Area.

(21) The following amendments to the plan were submitted on October 13, 1980, by the Governor.

(i) Amendments to the Nevada Revised Statutes: 704.820 through 704.900 (Utility Environmental Protection Act).

(ii) Rule 25, of General Order No. 3, Nevada Public Service Commission.

(22) The following amendments to the plan were submitted on November 5, 1980, by the Governor.

(i) Amendments to the Clark County District Board of Health Air Pollution Control Regulations: Section 4, Rules 4.12, 4.12.1–4.12.3.

(ii) Amendments to the Nevada Air Quality Regulations: Article 7, Rules 7.2.5, 7.2.5.1, 7.2.9; and Article 8, Rule 8.3.4.

(23) The following amendments to the plan were submitted on March 4, 1981, by the Governor:

(i) Las Vegas Valley Air Quality Implementation Plan (excluding Clark County Air Pollution Control Regulations).

(24) The following amendments to the plan were submitted on November 17, 1981 by the Governor.

(i) Amendments to the Nevada Air Quality Regulations: Article 14.1.

(ii) Resolution of the Washoe Council of Governments adopted August 28, 1981 and Endorsement of the State Environmental Commission dated October 15, 1981.

(iii) Amendments to the Clark County District Board of Health Air Pollution Control Regulations:

Section 1—Definitions 1.7, 1.13, 1.14, 1.15, 1.32, 1.48, 1.50, 1.52, 1.57, 1.67, 1.72, 1.90 and the addition of the following unnumbered definitions: ''Emission Unit,'' ''Criteria Pollutant,'' ''Non-Criteria Pollutant,'' ''Baseline Area,'' ''Begin Actual Construction,'' ''Building, Structure, Facility, or Installation,'' ''Particulate Precursor,'' ''Secondary Emissions,'' and ''Significant.''

Section 15—Source Registration, 15.1, 15.1.1, 15.1.2, 15.1.3, 15.1.4, 15.1.5, 15.1.6, 15.1.7, 15.1.8, 15.2; 15.2.1, 15.2.2, 15.3, 15.4, 15.5; Preconstruction Review for New and Modified Sources, 15.6, 15.6.1, 15.6.1.1, 15.6.1.2 (deleted), 15.6.1.6, 15.6.2, 15.6.2.1 (deleted), 15.6.2.2, 15.6.2.3, 15.6.2.4, 15.6.2.5, 15.6.3, 15.6.3.1, 15.6.3.2 to 15.6.3.5 (added), 15.6.6, 15.7, 15.8, 15.9, 15.10, 15.10.1, 15.10.2, 15.10.3, 15.10.4, 15.11, 15.12; Prevention of Significant Deterioration, 15.13 (added); Preconstruction Review Requirements for New or Modified Sources in Areas Exceeding Air Quality Standards (''Offset'' Rules), 15.14.1, 15.14.1.2, 15.14.1.3 (added), 15.14.3.1, 15.14.3.2, 15.14.4, 15.14.4.1, 15.14.4.3, 15.14.3.3 (added), 15.14.4.3.4 (added), 15.14.4.3.5 (added) and, 15.14.4.4 (deleted).

(iv) Amendments to the Clark County District Board of Health Air Pollution Control Regulations:

Section 4, Rule 4.7.3; Section 7; Section 9, Rules 9.1; Section 16; Section 17, Rules 17.2.1 and 17.6.1; Section 18, Rules 18.1—18.5.2; Section 23, Rules 23.2.1—23.3.1.2 and Rules 23.3.4—23.3.5; Section 27; Section 30, Rules 30.4 and 30.8; Section 52, Rules 52.4.2.3 and 52.7.2; and Section 60, Rules 60.4.3.

(v) Nevada State Lead SIP Revision submitted by the State on November 5, 1981.

(vi) Amendment to the Clark County District Board of Health Air Pollution Control Regulations: Section 60, Rule 60.4.2.

(25) The following amendments to the plan were submitted on October 26, 1982, by the Governor.

(i) Amendments of Chapter 445 of the Nevada Administrative Code.

(A) New or amended sections 445.430–445.437, 445.439–445.447, 445.451, 445.453–445.472, 445.474–445.477, 445.480–445.504, 445.509–445.519, 445.522–445.537, 445.539, 445.542–445.544, 445.546–445.549, 445.551, 445.552, 445.554–445.568, 445.570, 445.572–445.587, 445.589–445.605, 445.608–445.612, 445.614–445.622, 445.624, 445.626, 445.627, 445.629–445.655, 445.660, 445.662–445.667, 445.682, 445.685–445.700, 445.704–445.707, 445.712–445.716, 445.721, 445.723, 445.729–445,732, 445,734, 445,742, 445,743, 445,746, 445.575, 445,754, 445,764, 445,844, and 445,845.

(26) The following amendments to the plan were submitted on September 14, 1983 by the Governor.

(i) Amendments to Chapter 445 of the Nevada Administrative Code.

(A) New or amended Sections 445.732, 445.808 (paragraphs (1), (2)(a-c), and (3)–(5)), 445.815 (paragraphs (1), (2)(a)(1 and 2), and (3)–(5)), 445.816 (paragraphs (1), (2)(a-i), and (3)–(5)), 445.843, and 445.846 (paragraphs (1), (3), and (4)).

(ii) The Truckee Meadows Air Quality Implementation Plan 1982 Update except for the attainment and RFP demonstrations and Legally Enforceable Measures portions of the plan.

(iii) Amendments related to Nevada's inspection and maintenance (I/M) program.

(A) State legislation (AB 677) which defers the start-up of the annual I/M program from July 1, 1983 to October 1, 1983.

(B) An I/M public education plan.

(C) Revisions to the Engine Emission Control Regulations (Nevada Administrative Code 455.851 to 445.945).

(27) The following amendments to the plan were submitted on December 9, 1982, by the State:

(i) Emission reduction estimates and/or changes in vehicular activity for the adopted control measures.

(ii) A modeling analysis indicating 1982 attainment.

(iii) Documentation of the modeling analysis including air quality, traffic and meteorological data:

(iv) Evidence of implementation and/or future commitments for the adopted control measures.

(v) Appendix of previous reports, measured data and other official correspondence including:

(A) Resource commitments from the responsible agencies for implementing the RFP,

(B) 1979 and 1980 Annual Reports for the Lake Tahoe Air Basin, and

(C) 1981 Nevada Air Quality Report.

(28) The following amendments to the plan were submitted on December 16, 1982 by the State:

(i) Additional evidence of commitment to the control evidence by the responsible state and/or local agencies,

(ii) Additional supporting documentation for the 1982 attainment modeling analysis which included revised technical data on measured and modeled CO traffic volumes, and a revised narrative on the calibration constant and the impacts to the model.

(29) The following amendments to the plan were submitted on January 28, 1983 by the State:

(i) Response to EPA's preliminary evaluation, specifying documentation for calibrating the model, the mobile source emission factors, and additional traffic data.

(ii) Conversion factors for the model.

(iii) A revised 1982 attainment modeling analysis and supporting documentation including:

(A) 1979, 1980–82 traffic data for the Stateline Area, (Appendix A);

(B) Stateline Cold Start/Hot Start Analysis, (Appendix B);

(C) Portions of the Highway 50 Corridor Study, June 1979 (Appendix C);

(D) Reference from Transportation and Traffic Engineering Handbook, (1979), (Appendix D); and

(E) Revised Caline 3 and Mobile 2 modeling analysis using both 27% and 50% cold start factors, (Appendix E).

(30) The following amendments to the plan were submitted on May 5, 1983 by the State:

(i) ''Stateline, Nevada, 1983 Carbon Monoxide Study''—a traffic, ambient air monitoring and predictive modeling report, and

(ii) A revised analysis of the Caline 3 model verifying 1982 attainment, based on data collected in February and March 1983.

(31) The following amendments to the plan were submitted on May 30, 1984, by the Governor.

(i) Washoe County, Nevada Lead SIP Revision.

(32) The Las Vegas Valley 1982 Air Quality Implementation Plan (AQIP) Update for carbon monoxide submitted by the Governor on June 23, 1982.

(33) On January 11, 1985, the following amendments to the plan were submitted by the State.

(i) Incorporation by reference.

(A) Las Vegas Valley Air Quality Implementation Plan, Post 1982 Update for Ozone adopted on October 16, 1984.

(ii) Additional material.

(A) Emissions Inventory for 1995, transmitted by a letter dated March 14, 1986.

(34) Program elements were submitted on June 28, 1994 by the Governor's designee.

(i) Incorporation by reference.

(A) Small Business Stationary Source Technical and Environmental Compliance Assistance Program, adopted on June 28, 1994.

(35) Program elements were submitted on July 5, 1995 by the Governor's designee.

(i) Incorporation by reference.

(A) Small Business Stationary Source Technical and Environmental Compliance Assistance Program, adopted on July 5, 1995.

[37 FR 10878, May 31, 1972]

EDITORIAL NOTE: For FEDERAL REGISTER citations affecting § 52.1470, see the List of CFR Sections Affected in the Finding Aids section of this volume.

§52.1471 Classification of regions.

The Nevada plan is evaluated on the basis of the following classifications:

Air quality control region	Pollutant				
	Particulate matter	Sulfur oxides	Nitrogen dioxide	Carbon monoxide	Ozone
Las Vegas Intrastate	I	IA	III	I	I
Northwest Nevada Intrastate	I	III	III	III	III
Nevada Intrastate	IA	IA	III	III	III

[45 FR 7545, Feb. 4, 1980]

§52.1472 Approval status.

(a) With the exceptions set forth in this subpart, the Administrator approves Nevada's plan for the attainment and maintenance of the national standards under section 110 of the Clean Air Act.

(b) With the exceptions set forth in this subpart, the Administrator approves the plan with respect to Part D, Title I of the Clean Air Act, as amended in 1977, for the nonattainment areas listed in this paragraph.

(1) Mason Valley/Fernley Area for TSP.

(2) Lower Reese River Valley/Clovers Area for TSP.

(3) Carson Desert for TSP.

(4) Winnemucca Segment for TSP.

(5) Truckee Meadows for TSP and CO.

(6) Las Vegas Valley for TSP and CO.

(7) Lake Tahoe Basin for CO.

(c) With the exceptions set forth in this subpart, the Administrator approves the plan with respect to Part D, Title I of the Clean Air Act, as amended in the 1977, for the nonattainment areas listed in this paragraph. In addition, continued satisfaction of the requirements of Part D for the ozone portion of the State Implementation Plan (SIP) depends on the adoption and submittal by January 1, 1981 of reasonably available control technology (RACT) requirements for sources covered by Control Technique Guidelines (CTG's) published between January 1978 and January 1979.

(1) Truckee Meadows for O_3.

(2) Las Vegas Valley for O_3.

[46 FR 21766, Apr. 14, 1981, as amended at 47 FR 27069, June 23, 1982]

§52.1473 General requirements.

(a) The requirements of §51.116(c) of this chapter are not met in Washoe County, since the plan does not provide procedures for making emission data, as correlated with allowable emissions, available to the public. In addition, Chapter 020.065 of the ''Air Pollution Control Regulations'' of the District Board of Health of Washoe County in the Northwest Nevada Intrastate Region is disapproved since it contains provisions which restrict the public availability of emission data as correlated with applicable emission limitations and other control measures.

(b) Regulation for public availability of emission data. (1) Any person who cannot obtain emission data from the Agency responsible for making emission data available to the public, as specified in the applicable plan, concerning emissions from any source subject to emission limitations which are part of the approved plan may request that the appropriate Regional Administrator obtain and make public such data. Within 30 days after receipt of any such written request, the Regional Administrator shall require the owner or operator of any such source to submit information within 30 days on the nature and amounts of emissions from such source and any other information as may be deemed necessary by the Regional Administrator to determine whether such source is in compliance with applicable emission limitations or other control measures that are part of the applicable plan.

(2) Commencing after the initial notification by the Regional Administrator pursuant to paragraph (b)(1) of this section, the owner or operator of

the source shall maintain records of the nature and amounts of emissions from such source and any other information as may be deemed necessary by the Regional administrator to determine whether such source is in compliance with applicable emission limitations or other control measures that are part of the plan. The information recorded shall be summarized and reported to the Regional Administrator, on forms furnished by the Regional Administrator, and shall be submitted within 45 days after the end of the reporting period. Reporting periods are January 1–June 30 and July 1–December 31.

(3) Information recorded by the owner or operator and copies of this summarizing report submitted to the Regional Administrator shall be retained by the owner or operator for 2 years after the date on which the pertinent report is submitted.

(4) Emission data obtained from owners or operators of stationary sources will be correlated with applicable emission limitations and other control measures that are part of the applicable plan and will be available at the appropriate regional office and at other locations in the state designated by the Regional Administrator.

[37 FR 10878, May 31, 1972, as amended at 37 FR 15086, July 27, 1972; 38 FR 12708, May 14, 1973; 40 FR 55331, Nov. 28, 1975; 43 FR 1342, Jan. 24, 1978; 51 FR 40676, Nov. 7, 1986]

§ 52.1474 Part D conditional approval.

(a) The following portions of the Nevada SIP contain deficiencies with respect to Part D of the Clean Air Act which must be corrected within the time limit indicated.

(1)–(4) [Reserved]

[46 FR 21766, Apr. 14, 1981, as amended at 47 FR 15792, Apr. 13, 1982; 47 FR 27069, June 23, 1982; 49 FR 6900, Feb. 24, 1984]

§ 52.1475 Control strategy and regulations: Sulfur oxides.

(a) The requirements of subpart G of this chapter are not met since the plan does not adequately provide for attainment and maintenance of the National Ambient Air Quality Standards for sulfur oxides in the Nevada Intrastate Region.

(b) Article 8.1.3 of Nevada's ''Air Quality Regulations'' (emission limitation for sulfur from existing copper smelters), which is part of the sulfur oxides control strategy, is disapproved since it does not provide the degree of control needed to attain and maintain the National Ambient Air Quality Standards for sulfur oxides in the Nevada Intrastate Region.

(c) Regulation for control of fugitive sulfur oxides emissions (Nevada Intrastate Region). (1) The owner or operator of the Kennecott Copper Company smelter located in White Pine County, Nevada, in the Nevada Intrastate Region shall utilize best engineering techniques for reducing escape of pollutants to the atmosphere and to capture sulfur oxides emissions and vent them through a stack or stacks. Such techniques shall include, but not be limited to:

(i) Installing and operating hoods on all active matte tapholes, matte launders, slag skim bays, slag handling operations, and holding ladles on each reverberatory furnace;

(ii) Installing tight fitting hoods on each active converter and operating such hoods except during pouring and charging operations;

(iii) Maintaining all ducts, flues, and stacks in a leak-free condition;

(iv) Maintaining all reverberatory furnaces and converters under normal operating conditions in such a fashion that out-leakage of gases will be prevented to the maximum extent possible;

(v) Wherever feasible, ducting emissions through the tallest stack or stacks serving the facility; and

(vi) Wherever feasible, passing the effluents from all hooding through the tallest stack or stacks serving the facility.

(2) (i) If the owner or operator of the smelter subject to this paragraph is not in compliance with the provisions of paragraph (c)(1) of the section the following compliance schedule shall apply:

(*a*) 30 days after the effective date of this regulation. Let contracts or issue purchase orders for hoods and flues for control of fugitive sulfur oxides emissions or provide evidence that such contracts have been let.

(*b*) July 1, 1975. Initiate on-site construction and/or installation of emission control equipment.

(*c*) July 1, 1976. Complete on-site construction and/or installation of emission control equipment.

(*d*) January 1, 1977. Achieve final compliance with requirements of paragraph (c)(1) of this section.

(ii) The owner or operator of the smelter subject to the requirements of this paragraph shall certify to the Administrator within five days after the deadline for each increment of progress, whether or not the required increment of progress has been met.

(iii) If the source subject to this paragraph is presently in compliance with the requirements of paragraph (c)(1) of this section, the owner or operator of such source may certify such compliance to the Administrator within thirty (30) days of the effective date of this paragraph. If such certification is acceptable to the Administrator, the applicable requirements of this paragraph shall not apply to the certifying source. The Administrator may request whatever supporting information he considers necessary to determine the validity of the certification.

(3) The owner or operator of the smelter subject to this paragraph may submit to the Administrator, no later than thirty (30) days after the effective date of this paragraph, a proposed alternative compliance schedule. No such compliance schedule may provide for final compliance after January 1, 1977. If approved by the Administrator, such schedule shall satisfy the compliance schedule requirements of this paragraph for the affected source.

(d) *Regulation for control of sulfur dioxide emissions* (*Nevada Intrastate Region*). (1) The owner or operator of the Kennecott Copper Company smelter located in White Pine County, Nevada, in the Nevada Intrastate Region shall comply with all the requirements of this paragraph, except as provided in paragraph (e) of this section.

(2) (i) After July 31, 1977, the owner or operator of the smelter subject to this paragraph shall not discharge or cause the discharge of sulfur dioxide into the atmosphere in excess of 10,150 pounds per hour (4,603 kg/hr.) maximum 6-hour average as determined by the method specified in paragraph (d)(4) of this section.

(ii) The limitation specified in paragraph (d)(2)(i) of this section shall apply to the sum total of sulfur dioxide emissions from the smelter processing units and sulfur oxides control and removal equipment, but not including uncaptured fugitive emissions and those emissions due solely to the use of fuel for space heating or steam generation.

(3) (i) The owner or operator of the smelter to which this paragraph is applicable shall, no later than 30 days following the effective date of this paragraph, submit to the Administrator for approval a proposed compliance schedule that demonstrates compliance with paragraph (d)(2) of this section as expeditiously as practicable but not later than July 31, 1977.

(ii) The compliance schedule submitted to the Administrator pursuant to paragraph (d)(3)(i) of this section shall provide for increments of progress toward compliance. The dates for achievement of such increments of progress shall be specified. Increments of progress shall include, but not be limited to, the following:

(*a*) Submittal of final control plan to the Administrator for meeting the requirements of paragraph (d)(2) of this section.

(*b*) Letting of necessary contracts or process changes, or issuance of orders for the purchase of component parts, to accomplish emission control or process modification;

(*c*) Initiation of on-site construction or installation of emission control equipment or process modification;

(*d*) Completion of on-site construction or installation of emission control equipment or process modification;

(*e*) Full compliance with the requirements of paragraph (d)(2) of this section.

(iii) The owner or operator of the smelter subject to the requirements of this subparagraph shall certify to the Administrator within five days after the deadline for each increment of progress, whether or not the required increment of progress has been met.

(iv) Notice must be given to the Administrator at least 10 days prior to

conducting a performance test to afford him the opportunity to have an observer present.

(v) If the source subject to this paragraph is currently in compliance with the requirement of paragraph (d)(2) of this section, the owner or operator of such source may certify such compliance to the Administrator within thirty (30) days of the effective date of this paragraph. If such certification is acceptable to the Administrator, the applicable requirements of this paragraph (d)(3) of this section shall not apply to the certifying source. The Administrator may request whatever supporting information he considers necessary to determine the validity of the certification.

(4) (i) The owner or operator of the smelter to which this paragraph is applicable shall install, calibrate, maintain, and operate a measurement system(s) for continuously monitoring sulfur dioxide emissions and stack gas volumetric flow rates in each stack which emits 5 percent or more of the total potential (without emission controls) hourly sulfur oxides emissions from the source. For the purpose of this paragraph, ''continuous monitoring'' means the taking and recording of at least one measurement of sulfur dioxide concentration and stack gas flow rate reading from the effluent of each affected stack in each 15-minute period.

(ii) Within nine months after the effective date of this paragraph, and at other such times in the future as the Administrator may specify, the sulfur dioxide concentration measurement system(s) installed and used pursuant to this paragraph shall be demonstrated to meet the measurement system performance specifications prescribed in Appendix D to this part.

(iii) Within nine months after the effective date of this paragraph, and at other such times in the future as the Administrator may specify, the stack gas volumetric flow rate measurement system(s) installed and used pursuant to this paragraph shall be demonstrated to meet the measurement system performance specifications prescribed in Appendix E to this part.

(iv) The Administrator shall be notified at least ten (10) days in advance of the start of the field test period required in Appendices D and E to this part to afford the Administrator the opportunity to have an observer present.

(v) The sampling point for monitoring emissions shall be in the duct at the centroid of the cross section if the cross sectional area is less than 4.647 m^2 (50 $ft.^2$) or at a point no closer to the wall than 0.914 m (3 ft.) if the cross sectional area is 4.647 m^2 (50 $ft.^2$) or more. The monitor sample point shall be in an area of small spatial concentration gradient and shall be representative of the concentration in the duct.

(vi) The measurement system(s) installed and used pursuant to this section shall be subjected to the manufacturer's recommended zero adjustment and calibration procedures at least once per 24-hour operating period unless the manufacturer specifies or recommends calibration at shorter intervals, in which case such specifications or recommendations shall be followed. Records of these procedures shall be made which clearly show instrument readings before and after zero adjustment and calibration.

(vii) Six-hour average sulfur dioxide emission rates shall be calculated in accordance with paragraph (d)(5) of this section, and recorded daily.

(viii) The owner or operator of the smelter subject to this paragraph shall maintain a record of all measurements required by this paragraph. Measurement results shall be expressed as pounds of sulfur dioxide emitted per six hour period. A 6-hour average value calculated pursuant to paragraph (d)(5)(i) of this section shall be reported as of each hour for the preceding 6-hour period. Results shall be summarized monthly and shall be submitted to the Administrator within fifteen (15) days after the end of each month. A record of such measurements shall be retained for at least two years following the date of such measurements.

(ix) The continuous monitoring and recordkeeping requirements of this paragraph shall become applicable nine months after the effective date of this regulation.

(5) (i) Compliance with the requirements of paragraph (d)(2) of this section shall be determined using the continuous measurement system(s) installed, calibrated, maintained and operated in accordance with the requirements of paragraph (d)(4) of this section. For all stacks equipped with the measurement system(s) required by paragraph (d)(4) of this section, a 6-hour average sulfur dioxide emission rate shall be calculated as of the end of each clock hour, for the preceding six hours, in the following manner:

(*a*) Divide each 6-hour period into 24 15-minute segments.

(*b*) Determine on a compatible basis a sulfur dioxide concentration and stack gas flow rate measurement for each 15-minute period for each affected stack. These measurements may be obtained either by continuous integration of sulfur dioxide concentration and stack gas flow rate measurements (from the respective affected facilities) recorded during the 15-minute period or from the arithmetic average of any number of sulfur dioxide concentration and stack gas flow readings equally spaced over the 15-minute period. In the later case, the same number of concentration readings shall be taken in each 15-minute period and the readings shall be similarly spaced within each 15-minute period.

(*c*) Calculate the arithmetic average (lbs SO_2/hr) from all 24 emission rate measurements in each 6-hour period for each stack.

(*d*) Total the average sulfur dioxide emission rates for all affected stacks.

(ii) Notwithstanding the requirements of paragraph (d)(5)(i) of this section, compliance with the requirements of paragraph (d)(2) of this section shall also be determined by using the methods described below at such times as may be specified by the Administrator. For all stacks equipped with the measurement system(s) required by paragraph (d)(4) of this section, a 6-hour average sulfur dioxide emission rate (lbs SO_2/hr) shall be determined as follows:

(*a*) The test of each stack emission rate shall be conducted while the processing units vented through such stack are operating at or above the maximum rate at which they will be operated and under such other conditions as the Administrator mayspecify.

(*b*) Concentrations of sulfur dioxide in emissions shall be determined by using Method 8 as described in part 60 of this chapter. The analytical and computational portions of Method 8 as they relate to determination of sulfuric acid mist and sulfur trioxide as well as isokinetic sampling may be omitted from the over-all test procedure.

(*c*) Three independent sets of measurements of sulfur dioxide concentrations and stack gas volumetric flow rates shall be conducted during three 6-hour periods for each stack. Each 6-hour period will consist of three consecutive 2-hour periods. Measurements of emissions from all stacks on the smelter premises need not be conducted simultaneously. All tests must be completed within a 72-hour period.

(*d*) In using Method 8, traversing shall be conducted according to Method 1 as described in part 60 of this chapter. The minimum sampling volume for each two hour test shall be 40 ft^3 corrected to standard conditions, dry basis.

(*e*) The volumetric flow rate of the total effluent from each stack evaluated shall be determined by using Method 2 as described in part 60 of this chapter and by traversing according to Method 1. Gas analysis shall be performed by using the integrated sample technique of Method 4 as described inpart 60 of this chapter except that stack gases arising only from a sulfuric acid production unit may be considered to have zero moisture content.

(*f*) The gas sample shall be extracted at a rate proportional to the gas velocity at the sampling point.

(*g*) For each two hour test period, the sulfur dioxide emission rate for each stack shall be determined by multiplying the stack gas volumetric flow rate (ft^3/hr at standard conditions, dry basis) by the sulfur dioxide concentration (lb/ft^3 at standard conditions, dry basis). The emission rate in lbs/hr-maximum 6-hour average for each stack is determined by calculating the arithmetic average of the results of the three 2-hour tests.

(*h*) The sum total of sulfur dioxide emissions from the smelter premises in lbs/hr is determined by adding together

the emission rates (lbs/hr) from all stacks equipped with the measurement system(s) required by paragraph (d)(4) of this section.

(e) Alternate regulation for control of sulfur dioxide emissions (Nevada Intrastate Region). (1) The owner or operator of the Kennecott Copper Company smelter located in White Pine County, Nevada, in the Nevada Intrastate Air Quality Control Region may apply to the Administrator for approval to meet the requirements of this paragraph. Upon such approval, granted pursuant to paragraph (e)(3) of this section, the requirements of paragraph (d) shall not be applicable during the period of such approval, and all requirements of this paragraph shall apply.

(2) All terms used in this paragraph but not specifically defined below shall have the meaning given them in the Act, part 51 or § 52.01 of this chapter.

(i) The term ''supplementary control system'' means any system which limits the amount of pollutant emissions during periods when meteorological conditions conducive to ground-level concentrations in excess of national standards exist or are anticipated.

(ii) The term ''ambient air quality violation'' means any single ambient concentration of sulfur dioxide that exceeds any National Ambient Air Quality Standard for sulfur dioxide at any point in a designated liability area, as specified in paragraph(e)(8) of this section.

(iii) The term ''isolated source'' means a source that will assume legal responsibility for all violations of the applicable national standards in its designated liability area, as specified in paragraph (e)(8) of this section.

(iv) The term ''designated liability area'' means the geographic area within which emissions from a source may significantly affect the ambient air quality.

(3)(i) The application for permission to comply with this paragraph shall be submitted to the Administrator no later than sixty (60) days following the effective date of this paragraph and shall include the following:

(*a*) A short description of the type and location of the smelter; the process, equipment, raw materials and fuels used; the stacks employed; and emissions to the atmosphere from various points on the smelter premises.

(*b*) A general description and the location of other sources of air pollution and of the uses of land, and the topography in the vicinity of the smelter.

(*c*) A summary of all ambient air quality data in the vicinity of the smelter collected by or under contract to smelter.

(*d*) A description of the methods of constant emission reduction that are or will be applied and the degree of emission reduction achieved or expected due to their application.

(*e*) A description of the investigations that the owner or operator has made, and the results thereof, as to the availability of constant emission reduction methods that would meet the requirements of paragraph (d)(2) of this section and a discussion of the reasons why anypotentially available methods cannot reasonably be used.

(*f*) A specific description of the research, investigations, or demonstrations that the owner or operator will conduct or support for the purpose of developing constant emission reduction technology applicable to the smelter. Such description shall include the resources to be committed, qualifications of the participants, a description of the facilities to be utilized and milestone dates.

(*g*) A detailed description of all other measures the owner or operator will apply, in addition to those described in paragraph (e)(3)(i)(*d*) of this section, to provide for attainment and maintenance of the air quality standards. These measures include but need not be limited to supplementary control systems, tall stacks and other dispersion techniques. Each measure to be applied shall be described in sufficient detail to allow the Administrator to determine its effectiveness in reducing ambient concentrations.

(*h*) A written commitment by the owner or operator of the source subject to this paragraph agreeing to assume liability for all violations of National Ambient Air Quality Standards within the designated liability area.

(*i*) Such other pertinent information as the Administrator may require.

(ii) Upon receipt of the information specified in paragraph (e)(3)(i) of this section, and after making a determination of its adequacy, the Administrator promptly shall, after thirty (30) days notice, conduct a public hearing on the application submitted by the owner or operator. The Administrator shall make available to the public the information contained in the application. Within thirty (30) days after the hearing, the Administrator shall notify the owner or operator of the smelter and other interested parties of his decision as to whether to grant or deny the application. If he denies the application, he will set forth his reasons. If he approves the application the owner or operator shall comply with all provisions of paragraph (e) of this section and need not comply with provisions of paragraph (d) of this section except as provided in paragraph (e)(16) of this section.

(iii) Approval of the application to abide by the provisions of paragraph (e) will be granted if it can be satisfactorily demonstrated to the Administrator that control measures in addition to the available constant emission controls are required and if the specific measures submitted pursuant to paragraph (e)(3)(i)(*g*) of this section will provide for the attainment and maintenance of the National Ambient Air Quality Standards.

(4) (i) The owner or operator of the smelter subject to this paragraph shall not discharge or cause the discharge of sulfur dioxide into the atmosphere in excess of:

(*a*) 2,600 parts per million-maximum 6-hour average, from any single absorption sulfuric acid producing facility designed for the removal of sulfur dioxide, as determined by the method specified in paragraph (e)(6) (i) or (iii) of this section,and

(*b*) 29,000 pounds per hour (13,154 kg/hr) maximum 6-hour average, as determined by the method specified in paragraph (e)(6) (ii) or (iv) of this section. Such limitation shall apply to the sum total of sulfur dioxide emissions from the smelter processing units and sulfur oxides control and removal equipment but not including uncaptured fugitive emissions and those emissions due solely to use of fuel for space heating or steam generation.

(ii) All emissions from the converters, with the exception of the uncaptured fugitive emissions, shall be processed through a facility for the removal of sulfur dioxide which meets the requirements of paragraph (e)(4)(i)(*a*) of this section.

(5) (i) The owner or operator of the smelter to which this paragraph is applicable shall install, calibrate, maintain and operate a measurement system(s) for continuously monitoring sulfur dioxide emissions and stack gas volumetric flow rates in each stack which emits 5 percent or more of the total potential (without emission controls) hourly sulfur oxide emissions from the source. For the purpose of this paragraph, ''continuous monitoring'' means taking and recording of at least one measurement of sulfur dioxide concentration and stack gas flow rate reading from the effluent of each affected stack in each 15-minute period.

(ii) No later than the date specified in paragraph (e)(14)(i)(*b*)(*5*) of this section and at such other times in the future as the Administrator may reasonably specify, the sulfur dioxide concentration measurement system(s) installed and used pursuant to this paragraph shall be demonstrated to meet the measurement system performance specifications prescribed in Appendix D to this part.

(iii) No later than the date specified in paragraph (e)(14)(i)(*b*)(*5*) of this section and at such other times in the future as the Administrator may reasonably specify, the stack gas volumetric flow rate measurement system(s) installed and used pursuant to this paragraph shall be demonstrated to meet the measurement system performance specifications prescribed in Appendix E to this part.

(iv) The Administrator shall be notified at least 10 days in advance of the start of the field test period required in Appendices D and E to this part to afford the Administrator the opportunity to have an observer present.

(v) The sampling point for monitoring emissions shall be in the duct at the centroid of the cross section if the cross sectional area is less than 4.647

m^2 (50 ft^2) or at a point no closer to the wall than 0.914 m (3 ft) if the cross sectional area is 4.647 m^2 (50 ft^2) or more. The monitor sample point shall be an area of small spatial concentration gradient and shall be representative of the concentration in the duct.

(vi) The measurement system(s) installed and used pursuant to this section shall be subjected to the manufacturer's recommended zero adjustment and calibration procedures at least once per 24-hour operating period unless the manufacturer specifies or recommends calibration at shorter intervals, in which case such specifications or recommendations shall be followed. Records of these procedures shall be made which clearly show instrument readings before and after zero adjustment and calibration.

(vii) Six-hour average sulfur dioxide concentration and emission rates shall be calculated in accordance with paragraph (e)(6) of this section and recorded daily.

(viii) The owner or operator of the smelter subject to this paragraph shall maintain a record of all measurements required by this paragraph. Measurement results shall be expressed in the units prescribed by the emission limitations in paragraph (e)(4) of this section. Six-hour average values calculated pursuant to paragraphs (e)(6)(i) and (ii) of this section shall be reported as of each hour for the preceding six hours. The results shall be summarized monthly and shall be submitted to the Administrator within fifteen (15) days of the end of each month. A record of such measurements shall be retained for at least two years following the date of such measurements.

(6) (i) Compliance with the requirements of paragraph (e)(4)(i)(*a*) of this section shall be determined using the continuous measurements system(s) installed, calibrated, maintained and operated in accordance with the requirements of paragraph (e)(5) of this section. For the stack(s) equipped with the measurement system(s) required by paragraph (e)(5) of this section and serving the sulfur dioxide removal device a 6-hour average sulfur dioxide concentration shall be calculated as of the end of each clock hour for the preceding six hours, in the following manner:

(*a*) Divide each 6-hour period into twenty-four 15-minute segments.

(*b*) Determine on a compatible basis a sulfur dioxide concentration measurement for each 15-minute period. These measurements may be obtained either by continuous integration of all measurements (from the respective affected facility) recorded during the 15-minute period or from the arithmetic average of any number of sulfer dixide concentration redings equally spaced over the 15-minute period. In the latter case, the same number of concentration readings shall be taken in each 15-minute period and the readings shall be similarly spaced within each 15-minute period.

(*c*) Calculate the arithmetic average of all 24 concentration measurements in each 6-hour period.

(ii) Compliance with the requirements of paragraph (e)(4)(i)(*b*) of this section shall be determined using the continuous measurement system(s) installed, calibrated, maintained and operated in accordance with the requirements of paragraph (e)(5) of this section. For all stacks equipped with the measurement system(s) required by paragraph (e)(5) of this section, a 6-hour average sulfur dioxide emission rate shall be calculated as of the end of each clock hour for the preceding six hours, in the following manner:

(*a*) Divide each 6-hour period into twenty-four 15-minute segments.

(*b*) Determine on a compatible basis a sulfur dioxide concentration and stack gas flow rate measurement for each 15-minute period for each affected stack. These measurements may be obtained either by continuous integration of sulfur dioxide concentrations and stack gas flow rate measurements (from the respective affected facilities) recorded during the 15-minute period or from the arithmetic average of any number of sulfur dioxide concentration and stack gas flow rate readings equally spaced over the 15-minute period. In the latter case, the same number of concentration readings shall be taken in each 15-minute period and the readings shall be similarly spaced within each 15-minute period.

(*c*) Calculate the arithmetic average (lbs SO_2/hr) of all 24 emission rate measurements in each 6-hour period for each stack.

(*d*) Total the average sulfur dioxide emission rates for all affected stacks.

(iii) Notwithstanding the requirements of paragraph (e)(6)(i) of this section, compliance with the requirements of paragraph (e)(4)(i)(*a*) of this section shall also be determined by using the methods described below at such times as may be specified by the Administrator. For each stack serving any process designed for the removal of sulfur dioxide a 6-hour average sulfur dioxide concentration shall be determined as follows:

(*a*) The test of each stack emission concentration shall be conducted while the processing units vented through such stack are operating at or above the maximum rate at which such will be operated and under such other conditions as the Administrator may specify.

(*b*) Concentrations of sulfur dioxide in emissions shall be determined by using Method 8 as described in part 60 of this chapter. The analytical and computational portions of Method 8 as they relate to determination of sulfuric acid mist and sulfur trioxide as well as isokinetic sampling may be omitted from the over-all test procedure.

(*c*) Three independent sets of measurements of sulfur dioxide concentration shall be conducted during three 6-hour periods of each stack. Each 6-hour period will consist of three consecutive 2-hour periods. Measurements of emissions from all stacks on the smelter premises need not be conducted simultaneously. All tests must be completed within a 72-hour period.

(*d*) In using Method 8, traversing shall be conducted according to Method 1 as described in part 60 of this chapter. The minimum sampling volume for each two hour test shall be 40 ft^3 corrected to standard conditions, dry basis.

(*e*) The velocity of the total effluent from each stack evaluated shall be determined by using Method 2 as described in part 60 of this chapter and traversing according to Method 1. Gas analysis shall be performed by using the integrated sample technique of Method 3 as described in part 60 of thi8s chapter. Moisture content can be considered to be zero.

(*f*) The gas sample shall be extracted at a rate proportional to gas velocity at the sampling point.

(*g*) The sulfur dioxide concentration in parts per million-maximum 6-hour average for each stack is determined by calculating the arithmetic average of the results of the three 2-hour tests.

(iv) Notwithstanding the requirements of paragraph (e)(6)(ii) of this section, compliance with the requirements of paragraph (e)(4)(i)(*b*) of this section shall also be determined by using the methods described below at such times as may be specified by the Administrator. For all stacks equipped with the measurement system(s) required by paragraph (e)(5) of this section, a 6-hour average sulfur dioxide emission rate (lbs SO_2/hr) shall be determined as follows:

(*a*) The test of each stack emission rate shall be conducted while the processing units vented through such stack are operating at or above the maximum rate at which they will be operated and under such other conditions as the Administrator shall specify.

(*b*) Concentrations of sulfur dioxide in emissions shall be determined by using Method 8 as described in part 60 of this chapter. The analytical, and computational portions of Method 8 as they relate to determination of sulfuric acid mist and sulfur trioxide as well as isokinetic sampling may be omitted from the over-all test procedure.

(*c*) Three independent sets of measurements of sulfur dioxide concentrations and stack gas volumetric flow rates shall be conducted during three consecutive 2-hour periods for each stack. Measurements need not necessarily be conducted simultaneously of emissions from all stacks on the smelter premises.

(*d*) In using Method 8, Traversing shall be conducted according to Method 1 as described in part 60 of this chapter. The minimum sampling volume for each 2-hour test shall be 40 ft^3 corrected to standard conditions, dry basis.

(*e*) The volumetric flow rate of the total effluent from each stack evaluated shall be determined by using

Method 2 as described in part 60 of this chapter and by traversing according to Method 1. Gas analysis shall be performed by using the integrated sample technique of Method 3 as described in part 60 of this chapter. Moisture content shall be determined by use of Method 4 as described in part 60 of this chapter except that stack gases arising only from a sulfuric acid production unit may be considered to have zero moisture content.

(*f*) The gas sample shall be extracted at a rate proportional to the gas velocity at the sampling point.

(*g*) For each 2-hour test period, the sulfur dioxide emission rate for each stack shall be determined by multiplying the stack gas volumetric flow rate (ft^3/hr at standard conditions, dry basis) by the sulfur dioxide concentration (lb/ft^3 at standard conditions, dry basis). The emission rate in lbs/hr-maximum 6-hour average for each stack is determined by calculating the arithmetic average of the results of the three 2-hour tests.

(*h*) The sum total of sulfur dioxide emissions from the smelter premises in lbs/hr is determined by adding together the emission rates (lbs/hr) from all stacks equipped with the measurement system(s) required by paragraph (e)(5) of this section.

(7) The owner or operator of the smelter subject to this paragraph, in addition to meeting the emission limitation requirements of paragraph (e)(4) of this section, shall employ supplementary control systems and/or such additional control measures as may be necessary to assure the attainment and maintenance of the National Ambient Air Quality Standards for sulfur dioxide.

(i) Such measures will be limited to those specified in the application submitted pursuant to paragraph (e)(3)(i)(*g*) of this section.

(ii) Sulfur oxides emissions shall be curtailed whenever the potential for violating any National Ambient Air Quality Standard for sulfur dioxide is indicated at any point in a designated liability area by either of the following:

(*a*) Air quality measurement.

(*b*) Air quality prediction.

(8) (i) For the purposes of this paragraph the designated liability area shall be a circle with a radius of fifteen (15) statute miles (24 km) with the center point of such circle coinciding with the tallest stack serving the affected facility. The owner or operator of the smelter subject to this paragraph may submit a detailed report which justifies redefining the designated liability area specified by the Administrator. Such a justification shall be submitted with the application submitted pursuant to paragraph (e)(3)(i) of this section and shall describe and delineate the requested designated liability area and discuss in detail the method used and the factors taken into account in the development of such area. Upon receipt and evaluation of such report, and after the public hearing described in paragraph (e)(3)(ii) of this section, the Administrator shall issue his final determination.

(ii) If new information becomes available which demonstrates that the designated liability area should be redefined, the Administrator shall consider such and if appropriate, after notice and comment, redefine the designated liability area.

(9) (i) The owner or operator of the smelter subject to the paragraph shall submit with the application submitted pursuant to paragraph (e)(3)(i) of this section, a detailed plan for the establishment of a supplementary control system and/or such other measures as may be proposed. Such plan shall describe all air quality and emission monitoring and meteorological equipment to be used, including instruments installed pursuant to paragraph (e)(5) of this section for continuously monitoring and recording sulfur dioxide emissions and stack gas flow rate, the methods that will be used to determine emission rates to be achieved in association with various meteorological and air quality situations, and the general plan of investigations to be followed in developing the system and the operational manual.

(ii) Such plan shall include detailed specifications of any modifications to existing equipment including new stacks, stack extensions, stack heating systems or any process changes to be applied.

(iii) The monitoring described in the detailed plan submitted in accordance with this subparagraph and the appropriate recordkeeping requirements of paragraph (e)(12) of this section shall commence and become applicable as of the date specified in paragraph (e)(14)(i)(*b*)(*5*) of this section.

(10) The owner or operator of the smelter subject to this paragraph shall submit to the Administrator a comprehensive report of a study which demonstrates the capability of the supplementary control system, in conjunction with any other control measures, to reduce air pollution levels. The report shall describe a study conducted during a period of at least 120 days during which the supplementary control system was being developed and operated and shall be submitted no later than the date specified in paragraph (e)(14)(i)(*b*)(*6*) of this section. The report shall:

(i) Describe the emission monitoring system and the air quality monitoring network.

(ii) Describe the meteorological sensing network and the meteorological prediction program.

(iii) Identify the frequency, characteristics, times of occurrence and durations of meteorological conditions associated with high ground-level concentrations.

(iv) Describe the methodology (e.g., disperson modeling and measured air quality data) by which the source determines the degree of control needed under each meteorological situation.

(v) Describe the method chosen to vary the emission rate, the basis for the choice, and the time required to effect a sufficient reduction in the emission rate to avoid violations of National Ambient Air Quality Standards.

(vi) Contain an estimate of the frequency that emission rate reduction is required to prevent National Ambient Air Quality Standards from being exceeded and the basis for the estimate.

(vii) Include data and results of objective reliability tests. ''Reliability,'' as the term is applied here, refers to the ability of the supplementary control system to protect against violations of the National Ambient Air Quality Standards.

(viii) Demonstrate that the supplementary control system and other measures expected to be employed after the date specified in paragraph (e)(14)(i)(*b*)(*6*) of this section will result in attainment and maintenance of National Ambient Air Quality Standards.

(11) The owner or operator of the smelter subject to this paragraph shall submit to the Administrator an operational manual for the supplementary control system. Such manual shall be submitted no later than the date specified in paragraph (e)(14)(i)(*b*)(*6*) of this section and is subject to the approval of the Administrator as satisfying the specific requirements of this paragraph. Such approval shall not relieve the owner or operator of the smelter subject to this paragraph from its assumed liability for violations of any National Ambient Air Quality Standards for sulfur oxides in the designated liability area. Prior to making his final decision, the Administrator shall, after reasonable notice, provide an opportunity of not less than forty-five (45) days for public inspection and comment upon the manual. Such manual shall:

(i) Specify the number, type, and location of ambient air quality monitors, instack monitors and meteorological instruments to be used.

(ii) Describe techniques, methods, and criteria to be used to anticipate the onset of meteorological situations associated with ground-level concentrations in excess of National Ambient Air Quality Standards and to systematically evaluate and, as needed, improve the reliability of the supplementary control system.

(iii) Describe the criteria and procedures that will be used to determine the degree of emission control needed for each class of meteorological and air quality situations.

(iv) Specify maximum emission rates which may prevail during all probable meteorological and air quality situations, which rates shall be such that National Ambient Air Quality Standards will not be exceeded in the designated liability area. Such emission rates shall be determined by in-stack monitors. Data from such monitors shall be the basis for determining whether the emission rate provisions of

the approved operational manual are adhered to.

(v) Describe specific actions that will be taken to curtail emissions when various meteorological conditions described in paragraph (c)(11)(ii) of this section exist or are predicted and/or when specified air quality levels occur.

(vi) Identify the company personnel responsible for initiating and supervising the actions that will be taken to curtail emissions. Such personnel must be responsible, knowledgeable and able to apprise the Administrator of the status of the supplementary control system at any time the source is operating.

(vii) Be modified only if approval by the Administrator is first obtained.

(12) The owner or operator of the smelter subject to this paragraph shall:

(i) Maintain, in a usable manner, records of all measurements and reports prepared as part of the supplementary control system described in the approved operational manual. Such records shall be retained for at least two years.

(ii) Submit, on a monthly basis, the hour by hour measurements made of air quality, emissions and meteorological parameters, and all other measurements made on a periodic basis, as part of the approved supplementary control system.

(iii) Submit a monthly summary indicating all places, dates, and times when National Ambient Air Quality Standards for sulfur oxides were exceeded and the concentrations of sulfur dioxide at such times.

(iv) Notify the Administrator of any violation of National Ambient Air Quality Standards within 24 hours of the occurrence of such violation.

(v) Submit a monthly summary report describing and analyzing how the supplementary control system was operated as related to the approved operations manual and how the system will be improved, if necessary, to prevent violations of the National Ambient Air Quality Standards for sulfur oxides or to prevent any other conditions which are not in accordance with the approved operational manual.

(13)(i) The owner or operator of the smelter subject to this paragraph shall participate in a research program to develop and apply constant emission reduction technology adequate to attain and maintain the national standards. Such program shall be carried out in accordance with the plan submitted pursuant to paragraph (e)(3)(i)(*f*) of this section.

(ii) The owner or operator of the smelter subject to this paragraph shall submit annual reports on the progress of the research and development program required by paragraph (e)(13)(i) of this section. Each report shall also include, but not be limited to, a description of the projects underway, information on the qualifications of the personnel involved, information on the funds and personnel that have been committed, and an estimated date for the installation of the constant emission reduction technology necessary to attain and maintain the National Ambient Air Quality Standards.

(14) (i) The owner or operator of the smelter subject to this paragraph shall comply with the compliance schedules specified below.

(*a*) Compliance schedule for meeting the emission reduction requirements of paragraph (e)(4) of this section:

(*1*) No later than thirty (30) days after the date of approval to meet the requirements of this paragraph—submit a final plan and schedule to the Administrator for meeting the requirements of paragraph (e)(4) of this section.

(*2*) No later than thirty (30) days after the date of approval to meet the requirements of this paragraph—let contracts or issue purchase order for emission control systems or process modifications or provide evidence that such contracts have been let.

(*3*) July 1, 1975. Initiate on-site construction or installation of emission control equipment or process change.

(*4*) July 1, 1976. Complete on-site construction or installation of constant emission control equipment or process change.

(*5*) January 1, 1977. Achieve final compliance with the requirements of paragraph (*4*) of this paragraph (e)(14)(i)(*a*).

(*b*) Compliance schedule for implementing a supplementary control system or other measures which meet the

requirements of paragraphs (e) (7), (9), (10), and (11) of this section.

(*1*) No later than sixty (60) days after approval to meet the requirements of this paragraph—submit to the Administrator a detailed schedule for establishment and implementation of the supplementary control system and other measures in accordance with paragraph (e)(9) of this section.

(*2*) No later than ninety (90) days after approval to meet the requirements of this paragraph—let contracts or issue purchase orders, or provide evidence that such contracts have been let, for ambient air quality monitors, meteorological instruments, and other component parts necessary to establish a supplementary control system.

(*3*) No later than ninety (90) days after approval to meet the requirements of this paragraph—let contracts or issue purchase orders, or provide evidence that such contracts have been let, for any stack extensions or modifications of equipment approved pursuant to paragraph (e)(3) of this section.

(*4*) November 1, 1975. Complete installation of air quality and emission monitors and meteorological equipment.

(*5*) January 1, 1976. Complete installation of any stack extensions or modifications of equipment approved pursuant to paragraph (e)(3) of this section.

(*6*) May 1, 1976. Submit to the Administrator the comprehensive report on the supplementary control system required by paragraph (e)(10) of this section, and submit to the Administrator for his approval the operational manual required by paragraph (e)(11) of this section.

(*7*) January 1, 1977. The National Ambient Air Quality Standards for sulfur dioxide shall not be violated in the designated liability area.

(ii) Any owner or operator subject to the requirements of this subparagraph shall certify to the Administrator within five (5) days after the deadline for each increment of progress whether or not the required increment of progress has been met.

(iii) Notice must be given to the Administrator at least ten (10) days prior to conducting a performance test to afford him the opportunity to have an observer present.

(iv) If the source subject to this paragraph is presently in compliance with any of the increments of progress set forth in this paragraph, the owner or operator of such source shall certify such compliance to the Administrator within thirty (30) days of the effective date of this paragraph. The Administrator may request whatever supporting information he considers necessary to determine the validity of the certification.

(v) The owner or operator of the smelter subject to this paragraph may submit to the Administrator proposed alternative compliance schedules. Each such proposed compliance schedule shall be submitted with the application submitted pursuant to paragraph (e)(3)(i) of this section. No such compliance schedule may provide for final compliance after January 1, 1977. If approved by the Administrator, such schedule shall replace the compliance schedule set forth in this paragraph.

(vi) Any such compliance schedule submitted to the Administrator shall provide for increments of progress toward compliance. The dates for achievement of such increments of progress shall be specified. Increments of progress shall include, but not be limited to, the increments specified in the appropriate compliance schedule set forth in paragraphs (e)(14)(i) (*a*) and (*b*) of this section.

(15) (i) The Administrator shall annually review the supplementary control system and shall deny continued use of the supplementary control system if he determines that:

(*a*) The review indicates that constant emission control technology has become available or that other factors which may bear on the conditions for use of a supplementary control system have changed to the extent that continued use of the supplementary control system would no longer be deemed approvable within the intent of paragraph (e)(3) of this section; or

(*b*) The source owner or operator has not demonstrated good faith efforts to follow the stated program for developing constant emission reduction procedures; or

(*c*) The source owner or operator has not developed and employed a control program that is effective in preventing

violations of National Ambient Air Quality Standards.

(ii) Prior to denying the continued use of a supplementary control system pursuant to paragraph (e)(15)(i) of this section, the Administrator shall notify the owner or operator of the smelter subject to this paragraph of his intent to deny such continued use, together with:

(*a*) The information and findings on which such intended denial is based.

(*b*) Notice of opportunity for such owner or operator to present, within thirty (30) days, additional information or arguments to the Administrator prior to his final determination.

(iii) The Administrator shall notify the owner or operator of the smelter subject to this paragraph of his final determination within thirty (30) days after the presentation of additional information or arguments, or thirty (30) days after the final datee specified for such presentation if no presentation is made. If the continued usee of the supplementary control system is denied, the final determination shall set forth the specific grounds for such denial.

(16) Upon denial of the continued use of a supplementary control system pursuant to paragraph (e)(15) of this section all the requirements of paragraph (d) of this section shall be immediately applicable to the owner or operator of the Kennecott Copper Company smelter located in White Pine County, Nevada, in the Nevada Intrastate Region and compliance therewith shall be achieved in accordance with such schedule as the Administrator shall order.

(17) The owner or operator of the smelter subject to this paragraph shall be in violation of a requirement of an applicable implementation plan and subject to the penalties specified in section 113 of the Clean Air Act if:

(i) An increment of the compliance schedules set forth in paragraph (e)(14) of this section is not met by the date specified; or

(ii) The total sulfur dioxide concentration determined according to paragraph (e)(6) (i) or (iii) of this section exceeds the emission limitation set forth in paragraph (e)(4)(i)(*a*) of this section; or

(iii) The total sulfur dioxide emission rate determined according to paragraph (e)(6) (ii) or (iv) of this section exceeds the emission limitation set forth in paragraph (e)(4)(i)(*b*) of this section; or

(iv) Any National Ambient Air Quality Standards for sulfur oxides are violated in the designated liability area; or

(v) Operations of the supplementary control system are not conducted in accordance with the approved operational manual; or

(vi) Such owner or operator fails to submit any of the information required by this paragraph.

[40 FR 5511, Feb. 6, 1975, as amended at 51 FR 40676, Nov. 7, 1986]

§ 52.1476 Control strategy: Particulate matter.

(a) The requirements of subpart G of this chapter are not met since the plan does not provide for the attainment and maintenance of the national standards for particulate matter in the Northwest Nevada and Nevada Intrastate Regions.

(b) The following rule and portions of the control strategy are disapproved since they do not provide the degree of control needed to attain and maintain the National Ambient Air Quality Standards for particulate matter.

(1) NAQR Article 7.2.7, *Particulate Matter;* Table 4.2, *Emissions Inventory Summary for Particulates* and Table 5.2, *Summary of Control Strategy Analysis for Particulates*, from the Nevada Control Strategy, submitted on October 7, 1976.

(c) The following rules are disapproved because they relax the emission limitation on particulate matter.

(1) Clark County District Board of Health, Table 27.1, (Particulate Matter from Process Matter), submitted on July 24, 1979.

(2) Nevada Air Quality Regulations, Article 4, Rule 4.34, (Visible Emission from Stationary Sources), submitted on December 29, 1978, and Rule 4.3.6, (Visible Emission from Stationary Sources), submitted on June 24, 1980.

[37 FR 10877, May 31, 1972, as amended at 45 FR 8011, Feb. 6, 1980; 46 FR 43142, Aug. 27, 1981; 51 FR 40676, Nov. 7, 1986]

§ 52.1477 Nevada air pollution emergency plan.

Section 6.1.5 of the Emergency Episode Plan submitted on December 29, 1978 is disapproved since termination of the episode is left to the discretion of the Control Officer and not specified criteria and it does not meet the requirements of 40 CFR 51.16 and Appendix L. The old rule 6.1.5 submitted on January 28, 1972 is retained.

[45 FR 46385, July 10, 1980]

§ 52.1478 [Reserved]

§ 52.1479 Source surveillance.

(a) The requirements of § 51.211 of this chapter are not met, except in Clark County, since the plan does not provide adequate legally enforceable procedures for requiring owners or operators of stationary sources to maintain records of, and periodically report, information on the nature and amount of emissions.

(b) The requirements of § 51.214 of this chapter are not met since the plan does not provide adequate legally enforceable procedures to require stationary sources subject to emission standards to submit information relating to emissions and operation of the emission monitors to the State as specified in Appendix P of part 51.

[37 FR 10878, May 31, 1972, as amended at 38 FR 12709, May 14, 1973; 40 FR 55331, Nov. 28, 1975; 43 FR 36933, Aug. 21, 1978; 51 FR 40677, Nov. 7, 1986]

§§ 52.1480—52.1481 [Reserved]

§ 52.1482 Compliance schedules.

(a)—(b) [Reserved]

(c) The compliance schedule revisions submitted for the sources identified below are disapproved as not meeting the requirement of subpart N of this chapter. All regulations cited are air pollution control regulations of the State, unless otherwise noted.

Source	Location	Regulation involved	Date of adoption
Jack N. Tedford, Inc	Fallon	Not given	Aug. 14, 1972.
Basic, Inc	Gabbs	Article 4	Feb. 13, 1973.
		Article 7	June 26, 1973.
Duval Corp	Battle Mountain	Article 5	Feb. 13, 1973.
Mohave Generating Station, Southern California Edison Co.	Laughlin	Clark County, Section 16.	Jan. 11, 1973.
		Section 26	July 17, 1973.

[39 FR 14209, Apr. 22, 1974, as amended at 40 FR 3995, Jan. 27, 1975; 51 FR 40676, Nov. 7, 1986; 54 FR 25258, June 14, 1989]

§ 52.1483 Malfunction regulations.

(a) The following regulations are disapproved because they would permit the exemption of sources from applicable emission limitations under certain situations and therefore they do not satisfy the enforcement imperatives of section 110 of the Clean Air Act.

(1) Clark County District Board of Health

(i) Section 25, Rules 25.1–25.1.4.

[49 FR 10259, Mar. 20, 1984]

§ 52.1484 [Reserved]

§ 52.1485 Significant deterioration of air quality.

(a) The requirements of sections 160 through 165 of the Clean Air Act are not met, since the plan, except as it applies to the Clark County Health District, does not include approvable procedures for preventing the significant deterioration of air quality.

(b) Regulation for preventing significant deterioration of air quality. The provisions of § 52.21(b) through (w) are incorporated and made a part of the applicable State plan for the State of Nevada except for that portion applicable to the Clark County Health District.

(c) All applications and other information required pursuant to § 52.21 from sources located in the jurisdiction of the State of Nevada shall be submitted to the Director, Department of Conservation and Natural Resources,

201 South Fall Street, Carson City, Nevada instead of the EPA Region 9 Office.

[47 FR 26621, June 21, 1982, as amended at 48 FR 28271, June 21, 1983]

§ 52.1486 Control strategy: Hydrocarbons and ozone.

(a) The requirements of subpart G of this chapter are not met since the plan does not provide for the attainment and maintenance of the national standard for ozone in the Las Vegas Intrastate Region (§ 81.80 of this chapter).

[45 FR 67347, Oct. 10, 1980, as amended at 51 FR 40676, Nov. 7, 1986]

§ 52.1487 Public hearings.

(a) The requirements of § 51.102 (a) and (e) of this chapter are not met since NAQR, Article 2.11.4.2 allows variances (compliance schedules), to be renewed without a public hearing, thus allowing further postponement of the final compliance date for sources whose emissions contribute to violations of the national standards. Therefore, NAQR, Article 2.11.4.2 is disapproved.

[43 FR 1343, Jan. 24, 1978, as amended at 51 FR 40675, Nov. 7, 1986]

§ 52.1488 Visibility protection.

(a) The requirements of section 169A of the Clean Air Act are not met, because the plan does not include approvable procedures for protection of visibility in mandatory Class I Federal areas.

(b) Regulation for visibility monitoring and new source review. The provisions of §§ 52.26 and 52.28 are hereby incorporated and made a part of the applicable plan for the State of Nevada.

(c) *Long-term strategy*. The provisions of § 52.29 are hereby incorporated and made part of the applicable plan for the State of Nevada.

[50 FR 28553, July 12, 1985, as amended at 52 FR 45137, Nov. 24, 1987]

§ 52.1489 Particulate matter (PM–10) Group II SIP commitments.

(a) On March 29, 1989, the Air Quality Officer for the State of Nevada submitted a revision to the State Implementation Plan for Battle Mountain that contains commitments, for implementing all of the required activities including monitoring, reporting, emission inventory, and other tasks that may be necessary to satisfy the requirements of the PM–10 Group II SIPs.

(b) The Nevada Division of Environmental Protection has committed to comply with the PM–10 Group II, State Implementation Plan (SIP) requirements.

[55 FR 18111, May 1, 1990]

Subpart EE—New Hampshire

§ 52.1519 Identification of plan—conditional approval.

(a) The following plan revisions were submitted on the dates specified.

(1) On January 12, 1993, the New Hampshire Department of Environmental Services submitted a small business stationary source technical and environmental compliance assistance program (PROGRAM). On May 19, 1994, New Hampshire submitted a letter deleting portions of the January 12, 1993 submittal. In these submissions, the State commits to designate a state agency to house the small business ombudsman and to submit adequate legal authority to establish and implement a compliance advisory panel and a small business ombudsman. Additionally, the State commits to have a fully operational PROGRAM by November 15, 1994.

(i) Incorporation by reference.

(A) Letter from the New Hampshire Department of Environmental Services dated January 12, 1993 submitting a revision to the New Hampshire State Implementation Plan.

(B) State Implementation Plan Revision for a Small Business Technical and Environmental compliance Assistance Program dated January 12, 1993.

(C) Letter from the New Hampshire Department of Environmental Services dated May 19, 1994 revising the January 12, 1993 submittal.

(ii) Additional materials.

(A) Non-regulatory portions of the State submittal.

(2) Revisions to the State Implementation Plan submitted by the New Hampshire Air Resources Division on February 28, 1994, April 19, 1994, April

21, 1994, August 18, 1994, and letters dated May 19, 1994 and June 28, 1994, submitted by the New Hampshire Air Resources Division.

(i) Incorporation by reference.

(A) Letters from the New Hampshire Air Resources Division dated February 28, 1994, April 19, 1994, April 21, 1994, and August 18, 1994.

(B) Chapter 353 of the laws of 1993, An Act establishing an enhanced emissions inspection and maintenance program and requiring a diesel emissions study, effective July 3, 1993.

(C) Enhanced Emissions Inspection and Maintenance Rules, New Hampshire Department of Safety, adopted February 17, 1994, effective January 1, 1995.

(ii) Additional materials.

(A) Nonregulatory portions of the letter with attachments from the New Hampshire Air Resources Division dated February 28, 1994

(B) Nonregulatory portions of the letter with attachments from the New Hampshire Air Resources Division dated April 19, 1994.

(C) Letter with attachments from the New Hampshire Air Resources Division dated April 21, 1994.

(D) Letter from the New Hampshire Air Resources Division dated May 19, 1994.

(E) Letter with attachment from the New Hampshire Air Resources Division dated June 28, 1994.

(F) Letter with attachments from the New Hampshire Air Resources Division dated August 18, 1994.

(b) [Reserved]

(c)(1)–(2) [Reserved]

(3) Revision to the State Implementation Plan submitted by the New Hampshire Air Resources Division on June 14, 1995.

(i) Incorporation by reference.

(A) Letter from the New Hampshire Air Resources Division dated June 14, 1995, submitting a revision to the New Hampshire State Implementation Plan.

[59 FR 50506, Oct. 4, 1994, as amended at 59 FR 51517, Oct. 12, 1994; 60 FR 47290, Sept. 12, 1995]

§ 52.1520 Identification of plan.

(a) Title of plan: ''State of New Hampshire Implementation Plan.''

(b) The plan was officially submitted on January 27, 1972.

(c) The plan revisions listed below were submitted on the dates specified.

(1) Miscellaneous non-regulatory additions to the plan correcting minor deficiencies submitted on February 23, 1972, by the New Hampshire Air Pollution Control Agency.

(2) Non-regulatory provisions for retention and availability of air quality data submitted on March 23, 1972, by the New Hampshire Air Pollution Control Agency.

(3) Attainment dates of national primary and secondary air quality standards submitted on August 8, 1972, by the New Hampshire Air Pollution Control Agency.

(4) Revision of regulation No. 5, section 111.A, limiting sulfur content of fuels submitted on September 26, 1972, by the New Hampshire Air Pollution Control Agency.

(5) Compliance schedules submitted on February 14, 1973, by the New Hampshire Air Pollution Control Agency.

(6) Compliance schedules submitted on March 22, 1973, by the New Hampshire Air Pollution Control Agency.

(7) Revision exempting steam locomotives from the plan submitted on April 3, 1973, by the New Hampshire Air Pollution Control Agency.

(8) Regulation No. 20 requiring review of indirect sources submitted on December 13, 1973, by New Hampshire Air Pollution Control Agency.

(9) AQMA identification material submitted on May 20, 1974, by the New Hampshire Air Pollution Control Agency.

(10) Miscellaneous revisions to Regulation numbers, 4, 6, 8, 10, 11, 13, 14, and 17 submitted on June 6, 1974, by the New Hampshire Air Pollution Control Agency.

(11) Revision to Regulation 18, ''Requirements for Recordkeeping at Facilities which Discharge Air Contaminants,'' submitted on May 28, 1975, by the New Hampshire Air Pollution Control Agency.

(12) Attainment plans to meet the requirements of Part D for carbon monoxide for Metropolitan Manchester and ozone for AQCR 121, programs for the review of construction and operation of new and modified major stationary sources of pollution in both attainment and non-attainment areas and certain

miscellaneous provisions were submitted on May 29, 1979, November 6, 1979, and March 17, 1980.

(13) Attainment plans to meet the requirements of Part D for total suspended particulates and sulfur dioxide in Berlin were submitted by the Governor of New Hampshire on September 19, 1979.

(14) Revisions to Regulation 5, Prevention, Abatement, and Control of Sulfur Emission from Stationary Combustion Equipment, submitted by the Governor of New Hampshire on July 12, 1973 and April 11, 1975.

(15) A plan to provide comprehensive public participation and an analysis of the effects of the New Hampshire 1979 SIP revisions were submitted on February 28, 1980.

(16) Revised regulations to assure reasonable further progress and compliance by owners of proposed new sources with Federal as well as state regulations were submitted on July 8, 1980.

(17) A comprehensive air quality monitoring plan, intended to meet requirements of 40 CFR part 58, was submitted by the New Hampshire Air Resource Agency Director on January 30, 1980.

(18) A plan to attain and maintain the National Ambient Air Quality Standard for lead and to amend the state's air quality standards was submitted on April 15, 1980. A letter further explaining the state procedures for review of new major sources of lead emissions and confirming the use of reference methods was submitted on December 9, 1980 by the Director of the Air Resources Agency.

(19) Revisions to meet the requirements of Part D and certain other sections of the Clean Air Act, as amended, for attaining carbon monoxide standards in the City of Manchester which were submitted on January 12, 1981 and February 18, 1981. The revisions supplement the 1979 CO attainment plan (§ 52.1520(c)(12)) and include three air quality-improving transportation projects and a schedule for submitting a plan which will demonstrate attainment by no later than December 31, 1987.

(20) Revisions to meet ozone attainment requirements of Part D (VOC Control Regulations) were submitted on August 17, 1981 and are approved as follows: Regulations Air 1204.03, 1204.11(d), 1204.12, 1204.13, 1204.18 and 1204.21.

(21) Operating permits with compliance schedules for VOC sources were submitted May 2, 1980, May 16, 1980, November 20, 1981 and January 8, 1982. Approved are operating permits for Mobil Oil Corporation; ATC Petroleum, Inc.; Velcro USA, Inc.; and Nashua Corporation's facility at Nashua.

(22) Revisions to (i) provide a new format and renumber the SIP regulations with associated miscellaneous language changes for purposes of consistency; (ii) to delete redundant regulations and definitions; (iii) amend several regulations; and (iv) to add additional regulations submitted by the New Hampshire Air Resources Commission on June 17, 1982 and August 31, 1982. The federally-approved regulations of the New Hampshire SIP are as follows:

- CHAPTER 100, PART Air 101, Sections Air 101.04–101.26, 101.28–101.30, 101.32–101.49, 101.51, 101.53–101.56, 101.58–101.62, 101.64–101.69, 101.74–101.75, 101.77, 101.79–101.89, 101.91–101.96, 101.98.
- CHAPTER Air 200, PART Air 205.
- CHAPTER Air 300, PARTs Air 301–303.
- CHAPTER Air 400, PARTs Air 401; 402, Sections Air 402.01, 402.03, 402.04; PARTs Air 403–405.
- CHAPTER Air 600, PARTs Air 601–616.
- CHAPTER Air 700, PARTs Air 701–706.
- CHAPTER Air 800, PARTs Air 801–802.
- CHAPTER Air 900, PARTs Air 901–903.
- CHAPTER Air 1000, PART Air 1001.
- CHAPTER Air 1200, PART Air 1201, Sections 1201.01–1201.06, 1201.08–1201.11; PARTs Air 1202; 1203; 1204, Sections 1204.01–1204.16, 1204.18–1204.21; PARTs Air 1205; 1207; 1208.

(23) Carbon monoxide attainment plan revisions for the City of Manchester which meet the requirements of Part D of the Act for 1982 SIP revisions. The revisions were submitted on October 5, 1982 and December 20, 1982 by the New Hampshire Air Resources Agency.

(24) A revision specifying the State will follow Federal permit notice and hearing procedures for applications subject to PSD requirements was submitted by the Air Resources Commission on November 19, 1982.

(25) Revisions to the State Implementation Plan for ozone, consisting of emission limits and compliance schedules for Oak Materials Group, Ideal Tape Co., Markem Corp., Essex Group, and Nashua Corp.'s Merrimack Facility, were submitted on December 23, 1982, December 30, 1982, January 19, 1983, and March 18, 1983.

(26) Revisions to CHAPTER Air 400, Section Air 402.02 (formerly Regulation 5). raising the allowable sulfur-in-oil limit for all but ten sources, were submitted by New Hampshire on July 12, 1973, April 11, 1975, December 21, 1982 and March 29, 1983. The excluded sources are:

1. International Packings Corp., Bristol.
2. Dartmouth College, Hanover.
3. Hinsdale Products Co., Inc., Hinsdale.
4. Groveton Paper Co., Northumberland.
5. James River Corp./Cascade Division, Gorham.
6. Velcro USA, Inc., Manchester.
7. ATC Petroleum, Newington.
8. Anheuser-Busch, Inc., Merrimack.
9. Hoague-Sprague Corp., West Hopkinton.
10. Public Service Co., Manchester Steam, Manchester.

(27) Amendments to Regulation Air 1204.02(c), defining ''equivalent'' to include ''solids-applied basis'' and Air 1204.21(j), altering the maximum time for compliance schedule extensions from December 31, 1987 to July 1, 1985 were submitted on August 9, 1983. An additional regulation, Air 1204.17, ''Emission Standards for Miscellaneous Metal Parts and Products'' was submitted on August 17, 1981.

(28) Revisions to Air 1204.01, updating the list of volatile organic compounds exempted from PART Air 1204, and a revision to Air 101.74, 'Process weight' were submitted on November 10, 1983.

(29) Revisions raising the allowable sulfur-in-oil limit to 2.0% for five sources excluded from revisions to CHAPTER Air 400, Section 402.02 (identified at subparagraph (c)(26) above), submitted on November 1, 1983. The five sources, and the source specific emission limits where applicable, are:

1. International Packings Corp., Bristol.
2. Velcro USA, Inc., Manchester.
3. Dartmouth College, Hanover (Limited to a maximum allowable hourly production of 164,000 pounds of steam.).
4. Sprague Energy-Atlantic Terminal Corp., Newington (Limited to firing any three of four boilers, or if all four boilers are fired, the sulfur content is limited 1.5%.).
5. Hoague-Sprague Corp., Hopkinton (Limited to firing any one of two boilers.)

(30) Revisions to Air 1201.05 adding paragraph (e), concerning hazardous waste incinerators, was submitted on April 9, 1984. Approval of this regulation shall not be construed to supercede New Source Performance Standards; National Emission Standards for Hazardous Air Pollutants; and the regulations controlling emissions from major new or modified stationary sources in attainment and non-attainment areas.

(31) Revisions raising the allowable sulfur-in-oil limit to 2.0% for two sources excluded from revisions to CHAPTER Air 400, Section 402.02 (identified at paragraph (c)(26) of this section), submitted on January 13, 1984. The two sources, and the source specific restrictions at each, are:

(i) Manchester Steam Station, Public Service Company of N.H., Manchester (The auxiliary boiler is allowed to burn 2.0% sulfur oil as long as the main boilers remain inactive. If either or both of the main boilers are reactivated, the maximum sulfur content of oil burned in any boiler shall not exceed 1.7% by weight. In addition, each main boiler shall not operate until its stack height is increased to 45 m.)

(ii) Hinsdale Products Co., Inc., Hinsdale (Limited to a maximum hourly fuel firing rate of 213 gallons.)

(32) A revision submitted on December 22, 1983 which requires Markem Corporation to install an incinerator. The installation of the incinerator must be completed by July 1, 1985.

(33) The TSP plan to attain primary standards in Berlin, New Hampshire and the administrative order issued May 2, 1984 to the James River Corporation which were submitted by the Air Resources Agency on May 9, 1984.

(34) Revisions to Part (Air) 610 of Chapter 600, ''Statewide Permit System'' for the preconstruction permitting of new major sources and major modifications in nonattainment areas submitted on April 9, 1984 and September 10, 1984 by the New Hampshire Air Resources Commission.

(35) A revision to approve operating limits for boilers at Dartmouth College, submitted on May 19, 1986 by the Director of the New Hampshire Air Resources Agency.

(i) Incorporation by reference.

(A) Permits to Operate issued by the State of New Hampshire Air Resources Agency to Dartmouth College, No. PO–B–1501.5, No. PO–B–1502.5, and No. PO–B–1503.5, and Temporary Permit TP–B–150.2, 3, and 4, dated January 6, 1986.

(36) Approval of a revision to allow the James River Corporation (Cascade Mill), Gorham, to burn oil having a 2.2% sulfur-by-weight limit in accordance with previously approved SIP regulation Chapter Air 400, Section Air 402.02, submitted on February 11, 1985. This sources was excluded from revisions pertaining to New Hampshire regulation Chapter Air 400, Section Air 402.02 (identified at paragraph (c)(26) of this section), but New Hampshire has now submitted adequate technical support for approval.

(37) Revisions to the State Implementation Plan submitted on April 26, 1985, January 20, 1986 and May 12, 1987 by the Air Resources Commission.

(i) Incorporation by reference.

(A) Letter dated April 26, 1985 from the New Hampshire Air Resources Commission submitting revisions to the State Implementation Plan for EPA approval.

(B) Revisions to New Hampshire Code of Administrative Rules, Part Air 704.01, ''Permit Review Fee for Large Fuel Burning Devices,'' Part Air 704.02, ''Permit Review Fee for All Other Devices,'' Part Air 706.01, ''Renewal Review Fee For Large Fuel Burning Devices,'' Part Air 706.02, ''Renewal Review Fee For All Other Devices,'' Part Air 1202, ''Fuel Burning Devices,'' effective on December 27, 1984.

(C) Certification from the State of New Hampshire dated April 26, 1985.

(D) Letter from the State of New Hampshire dated January 20, 1986.

(E) Letter from the State of New Hampshire dated May 12, 1987.

(38) Approval of a revision to allow the James River Corporation, Groveton, to burn oil having a 2.2% sulfur-by-weight limit in accordance with previously approved SIP regulation CHAPTER Air 400, Section Air 402.02, submitted on January 22, 1986. This source was previously excluded from revisions pertaining to New Hampshire regulation CHAPTER Air 400, Section Air 402.02 (identified at paragraph (c)(26) of this section), but New Hampshire has now submitted adequate technical support for approval.

(i) Incorporation by reference.

(A) The conditions in the following five Permits to Operate issued by the State of New Hampshire Air Resources Agency on September 6, 1985, to the James River Corporation—Groveton Group: Permit No. PO–B–1550, Conditions 5B, 5C, and 5D; Permit No. PO–B–213, Conditions 2 and 5A; Permit No. PO–B–214, Conditions 2 and 5A; Permit No. PO–B–215, Conditions 2 and 5A; and Permit No. PO–BP–2240, Condition 5B. These conditions limit the sulfur-in-fuel content at the James River Corporation, Groveton, to 2.2% sulfur by weight.

(39) Attainment plans for carbon monoxide for the City of Nashua including an extension of the attainment date to December 31, 1990 as submitted on September 12, 1985, December 3, 1985, October 7, 1986, March 6, 1987, May 12, 1987 and October 15, 1987.

(i) Incorporation by reference. (A) The New Hampshire Code of Administrative Rules, Department of Safety, Chapter 900, Emission Inspections, Part Saf–M, 901, Part Saf–M 902, Part Saf–M 903, Part Saf–M 904, Part Saf–M 905, Part Saf–M 906,Part Saf–M 907, Part Saf–M 908, Part Saf–M 909, and Part Saf–M 910, effective October 6, 1986.

(B) Section 715.02 Introductory Text and paragraph (1) of Part Saf–M–715, and § 716.01 Introductory Text and paragraph (g) of Part Saf–M–716, submitted to New Hampshire Department of Safety by the State of New Hampshire on August 14, 1985.

(ii) Additional material. (A) A letter from Governor John H. Sununu to Michael R. Deland, dated March 6, 1987, committing to take legislative measures to convert the Inspection/Maintenance program in the Nashua area to the use of computerized emission analyzers in the event that the program is found to not be achieving the necessary emission reductions.

(B) Narrative submittals, including an attainment demonstration.

(40) Revisions to the State Implementation Plan submitted by the New Hampshire Air Resources Division on July 6, 1989.

(i) Incorporation by reference.

(A) Letter from the New Hampshire Air Resources Division dated July 6, 1989 submitting revisions to the New Hampshire State Implementation Plan.

(B) Revisions to New Hampshire's Rule Env-A 303.01 entitled ''Particulate Matter,'' effective April 21, 1989.

(C) Revisions to New Hampshire's Rule Env–A 1001.02 entitled ''permissible Open Burning,'' effective May 26, 1989.

(41) Revisions to the State Implementation Plan submitted by the New Hampshire Air Resources Division on February 12, 1991.

(i) Incorporation by reference.

(A) Letter from the New Hampshire Air Resources Division dated February 12, 1991 submitting a revision to the New Hampshire State Implementation Plan.

(B) Env–A 802.09 and Env–A 802.10 of the New Hampshire Administrative Rules Governing the Control of Air Pollution entitled ''Continuous Emission Monitoring'' and ''CEM Recordkeeping Requirements,'' respectively. These regulations were effective on December 27, 1990.

(ii) Additional materials.

(A) Nonregulatory portions of the State submittal.

(42) [Reserved]

(43) Revisions to the State Implementation Plan submitted by the New Hampshire Air Resources Division on November 21, 1989.

(i) Incorporation by reference.

(A) Letter form the New Hampshire Air Resources Division dated November 21, 1989 submitting a revision to the New Hampshire State Implementation Plan.

(B) Amendments to regulations for the State of New Hampshire's Administrative Rules Governing Air Pollution in Chapters Env–A 100, 800, 900 and 1200 which were effective November 16, 1989.

(C) Letter from Robert W. Varney, Commissioner of the Department of Environmental Services of New Hampshire, to John B. Hammond, Acting Director of the New Hampshire Office of Legislative Services, dated November 15, 1989, adopting final rules.

(44) Revisions to the State Implementation Plan submitted by the New Hampshire Air Resources Division on September 12, 1990.

(i) Incorporation by reference.

Letter from the New Hampshire Air Resources Division dated September 12, 1990 submitting a revision to the New Hampshire State Implementation Plan that withdraws nine source-specific operating permits incorporated by reference at 40 CFR 52.1520(c)(21), (c)(25) and (c)(32).

(ii) Additional Materials.

Letter from the New Hampshire Air Resources Division dated July 2, 1991 submitting documentation of a public hearing.

(45) Revisions to the State Implementation Plan consisting of a readoption of the Rules Governing the Control of Air Pollution for the State of New Hampshire submitted by the New Hampshire Air Resources Division on February 12, 1991.

(i) Incorporation by reference.

(A) Letter from the New Hampshire Air Resources Division dated February 12, 1991 submitting revisions to the New Hampshire State Implementation Plan.

(B) The following portions of the Rules Governing the Control of Air Pollution for the State of New Hampshire effective on December 27, 1990:

- Chapter Env-A 100: Sections Env-A 101.01–.20, 101.22–.26, 101.28–.32, 101.34–50, 101.52, 101.54–.57, 101.59–.62, 101.64–.97 and 101.99.
- Chapter Env-A 200: Parts Env-A 201–205; Part Env-A 207; Section Env-A 209.05; and Part Env-A 210.
- Chapter Env-A 300: Parts Env-A 301–303.
- Chapter Env-A 400: Part Env-A 401–404; Sections Env-A 401–404; Sections Env-A 405.01–.05(b) and 405.06.
- Chapter Env-A 600: Parts Env-A 601–602; Sections Env-A 603.01–.02(o) and 603.03(a)-(e); and Parts Env-A 604–616.
- Chapter Env-A 700: Parts Env-A 701–705.
- Chapter Env-A 800: Parts Env-A 801–802; and Part Env-A 804.
- Chapter Env-A 900' Parts Env-A 901–903.
- Chapter Env-A 1000: Part Env-A 1001.
- Chapter Env-A 1200: Parts Env-A 1201–1203; Sections 1204.01–.11 and 1204.13–.19; Part Env-A 1205; Sections Env-A 1206.01–.02 and 1206.04–.06; and Parts Env-A 1207–1208.

(ii) Additional materials.

(A) Letters from the New Hampshire Air Resources Division dated May 7, August 20, and August 26, 1991, March 6, and May 6, 1992 withdrawing certain portion of the February 12, 1991 SIP submittal.

(46) Revisions to the State Implementation Plan consisting of amendments to Chapter Env–A 1204.12 *Emission Control Methods for Cutback and Emulsified Asphalt* submitted by the New Hampshire Air Resources Division on May 15, 1992.

(i) Incorporation by reference.

(A) Letter from the New Hampshire Air Resources Division dated May 15, 1992 submitting a revision to the New Hampshire State Implementation Plan.

(B) The following portions of the Rules Governing the Control of Air Pollution for the State of New Hampshire effective on January 17, 1992: Chapter Env–A 1200: PART Env–A 1204.12 *Emission Control Methods for Cutback and Emulsified Asphalt.*

(47) Revisions to the State Implementation Plan submitted by the New Hampshire Air Resources Division on May 15, 1992.

(i) Incorporation by reference.

(A) Letter from the New Hampshire Air Resources Division dated May 15, 1992 submitting a revision to the New Hampshire State Implementation Plan.

(B) The following portions of the Rules Governing the Control of Air Pollution for the State of New Hampshire effective on January 17, 1992:

—Chapter Env-A 800: Part Env-A 805

—Chapter Env-A 1200: Sections Env-A 1204.02, 1204.04, 1204.05–1204.08, 1204.14–1204.15.

[37 FR 10879, May 31, 1972]

EDITORIAL NOTE: For FEDERAL REGISTER citations affecting § 52.1520, see the List of CFR Sections Affected in the Finding Aids section of this volume.

§ 52.1521 Classification of regions.

The New Hampshire plan was evaluated on the basis of the following classifications:

Air quality control region	Pollutant				
	Particulate matter	Sulfur oxides	Nitrogen dioxide	Carbon monoxide	Ozone
Androscoggin Valley Interstate	IA	IA	III	III	III
Central New Hampshire Intrastate	III	III	III	III	III
Merrimack Valley-Southern New Hampshire Interstate	I	I	III	III	III

[37 FR 10879, May 31, 1972, as amended at 45 FR 24876, Apr. 11, 1980]

§ 52.1522 Approval status.

(a) With the exceptions set forth in this subpart, the Administrator approves New Hampshire's plan as identified in § 52.1520 of this subpart for the attainment and maintenance of the national standards under section 110 of the Clean Air Act. Furthermore, the Administrator finds the plans satisfy all requirements of Part D, Title I of the Clean Air Act as amended in 1977, except as noted below.

(b) To insure Federal approval of State issued new source review permits pursuant to section 173 of the Clean Air Act, the provisions of Section V of the emission offset interpretative rule published January 16, 1979, (44 FR 3274) must be met.

[45 FR 24876, Apr. 11, 1980, as amended at 48 FR 50078, Oct. 31, 1983]

§ 52.1523 Attainment dates for national standards.

The following table presents the latest dates by which the national standards are to be attained. The dates reflect the information presented in New Hampshire's plan.

Nonattainment areas [1]	TSP		SO_2		NO_2	CO	O_3
	Primary	Secondary	Primary	Secondary			
Androscoggin Valley Interstate AQCR 107:							
Berlin	g	f	f	f	a	a	a
Remainder of AQCR	a	b	a	b	a	a	a
Merrimack Valley-SO NH Interstate 121:							
Keene	a	b	a	b	a	a	d
Manchester	a	c	a	b	a	h	d
Nashua	a	b	a	b	a	e	d
Remainder of AQCR	a	b	a	b	a	a	d
AQCR 149	a	b	a	b	a	a	a

a. Air quality level presently below primary standards or area is unclassifiable.
b. Air quality level presently below secondary standards or area is unclassifiable.
c. Eighteen month extension for plan submittal granted; attainment date not yet proposed.
d. December 31, 1982.
e. Redesignation to non-attainment. Nine months granted for submission of an attainment plan; attainment date not yet proposed.
f. December 31, 1981.
g. August 31, 1985.
h. December 31, 1987.
[1] Sources subject to plan requirements and attainment dates established under section 110(a)(2)(A) prior to the 1977 Clean Air Act Amendments remain obligated to comply with those requirements by the earlier deadlines. The earlier attainment dates are set out at 40 CFR 52.1523 (1978).

[45 FR 24876, Apr. 11, 1980, as amended at 50 FR 51250, Dec. 16, 1985; 51 FR 21550, June 13, 1986]

§ 52.1524 Compliance schedules.

(a) Compliance schedules for the sources identified below are approved as meeting the requirements of subpart N of this chapter. All regulations cited are air pollution control regulations of the State, unless otherwise noted.

Source	Location	Regulation involved	Date of adoption	Effective date	Final compliance date
Markem Corporation	Keene, NH	No. 1204.05	Feb. 10, 1984	Feb. 19, 1981	July 1, 1985.

(b) The requirements of § 51.262(a) of this chapter are not met since compliance schedules with adequate increments of progress have not been submitted for every source for which they are required.

(c) The compliance schedules for the sources identified below are disapproved as not meeting the requirements of subpart N of this chapter. All regulations cited are air pollution control regulations of the State, unless otherwise noted.

Source	Location	Regulation involved	Date of adoption
Brown Co	Berlin, N.H	No. 15	May 14, 1973.

(d) Federal compliance schedules. The compliance schedules for the sources identified below are promulgated herein in satisfaction of the requirements of subpart N of this chapter. All regulations cited are air pollution control regulations ofthe State, unless otherwise noted.

Source	Location	Regulation involved	Effective date	Final compliance date
Brown Co.:				
(a) No. 11 Kraft recovery	Berlin, N.H.	15	Immediately	Jan. 1973.
(b) No. 11 Kraft recovery	do	15	do	Jan. 1974.
(c) No. 8 Kraft recovery boiler main stack	do	15	do	July 1974.
(d) No. 8 Kraft recovery smelt tank vent	do	15	do	Dec. 1974.
(e) Heavy black liquor oxidation	do	15	do	June 1974.
(f) No. 1 lime kiln stack	do	15	do	Jan. 1973.
(g) No. 2 lime kiln stack	do	15	do	Dec. 1974.

[38 FR 12713, May 14, 1973, as amended at 38 FR 16145, June 20, 1973; 38 FR 22744, Aug. 23, 1973; 49 FR 38102, Sept. 27, 1984; 51 FR 40676, 40677, Nov. 7, 1986; 54 FR 25259, June 14, 1989]

§ 52.1525 EPA-approved New Hampshire state regulations.

The following table identifies that State regulations which have been submitted to and approved by EPA as revisions to the New Hampshire State Implementation Plan. This table is for informational purposes only and does not have any independent regulatory effect. To determine regulatory requirements for a specific situation consult the plan identified in § 52.1520. To the extent that this table conflicts with § 52.1520, § 52.1520 governs.

TABLE 52.1525—EPA-APPROVED RULES AND REGULATIONS [1]—NEW HAMPSHIRE

Title/subject	State citation chapter [2]	Date adopted State	Date approved EPA	Federal Register citation	52.1520	Comments
Organizational Rules: Definitions.	CH Air 100	12/17/81	3/15/83	48 FR 10830	(c)(22)	Sections Air 101.01–.03; .27; .31; .50; .52; .57; .63; .70–.73; .76; .78; .90; .97 and PARTs Air 102 and 103 are not part of the approved SIP.
		7/21/83	2/01/84	49 FR 3989	(c)(28)	Approved Section Air 101.74, Def. of 'process weight.'
	Env-A 100	11/16/89	6/13/91	56 FR 27197	(c)(43)	Approved Sections Env-A 101.79, Def. of 'Reasonable Available Control Technology' and Env-A 101.98, Def. of 'Volatile Organic Compound.'
		12/24/90	8/14/92	57 FR 36605	(c)(45)	Part Env-A 101 renumbered and completely replaced; Sections Env-A 101.21; .27; .33; .51; .53; .58; .63; .98; and Parts Env-A 102 and 103 are not part of the approved SIP.
Procedural Rules	CH Air 200	12/17/81	3/15/83	48 FR 10830	(c)(22)	Parts Air 201–204 and Parts Air 206–210 are not part of the approved SIP.
		10/21/82	4/21/83	48 FR 17077	(c)(24)	Section Air 205.10 added.
	Env-A 200	12/24/90	8/14/92	57 FR 36605	(c)(45)	Parts Env-A 206 and 208 and Sections Env-A 209.01–04 are not part of the approved SIP.
Ambient Air Quality Standards	CH Air 300	12/17/81	3/15/83	48 FR 10830	(c)(22)	Part Air 304 is not part of the approved SIP.
	Env-A 300	12/24/90	8/14/92	57 FR 36605	(c)(45)	Part Env-A 304 is not part of the approved SIP.
Particulate matter	Env-A 303	4/21/89	8/19/94	59 FR 42768	(c)(40)	303.01 303.015
Sulfur Content Limits in Fuels	CH Air 400	12/17/81	3/15/83	48 FR 10830	(c)(22)	Section Air 402.02 is not part of the approved SIP.
		2/20/75	3/23/84	49 FR 11094	(c)(26)	Section Air 402.02 added, raising allowable sulfur-in-oil limit for but 10 sources.
		10/20/83	8/07/84	49 FR 31415	(c)(29)	Revision to Section Air 402.02, raises allowable sulfur-in-oil limit for 5 source excluded at (c)(26) above.
		12/15/83	8/01/84	49 FR 30695	(c)(31)	Revision to Section Air 402.02, raises allowable sulfur-in-oil limit for 2 sources excluded at (c)(26) above.
		4/17/86	2/02/87	52 FR 3117	(c)(35)	Revision restricting emission limits for Dartmouth College.
		1/17/85	4/15/87	52 FR 12164	(c)(36)	Revision to Section Air 402.02, raises allowable sulfur-in-oil limit for James River Corp.—Cascade.
		9/09/85	12/14/87	52 FR 47392	(c)(38)	Revision to Section Air 402.02, raises allowable sulfur-in-oil limit for James River Corp.—Groveton.

TABLE 52.1525—EPA-APPROVED RULES AND REGULATIONS [1]—NEW HAMPSHIRE—Continued

Title/subject	State citation chapter [2]	Date adopted State	Date approved EPA	Federal Register citation	52.1520	Comments
	Env-A 400	12/24/90	8/14/92	57 FR 36605	(c)(45)	Part Env-A 405 renumbered and completely replaced; Section Env-A 405.05 (c) and (d); and Part Env-A 406 are not part of the approved SIP.
Statewide Permit System	CH Air 600	12/17/81	3/15/83	48 FR 10830	(c)(22)	Part Air 609 repealed at (c)(16).
		1/26/84	3/13/85	50 FR 10004	(c)(36)	Revisions to Part Air 610.
	Env-A 600	12/24/90	8/14/92	57 FR 36606	(c)(45)	Part Env-A 603 renumbered and completely replaced; Sections Env-A 603.02(p), 603.03(f) and 603.03(g) are not part of the approved SIP.
Permit Fee System	CH Air 700	12/17/81	3/15/83	48 FR 10830	(c)(22)	
		12/20/84	9/17/87	52 FR 35082	(c)(37)	Revisions to Sections Air 704.01–.02 and Air 706.01–.02.
	Env-A 700	12/24/90	8/14/92	57 FR 36605	(c)(45)	
Testing and Monitoring	CH Air 800	12/17/81	3/15/83	48 FR 10830	(c)(22)	Part Air 803 is not part of the approved SIP.
	Env-A 800	11/16/89	6/13/91	56 FR 27197	(c)(43)	Part Env-A 804 added; Revision to Section Env-A 802.07.
		12/24/90	8/14/91	56 FR 40253	(c)(41)	Sections Env-A 802.09–.10 added.
		12/24/90	8/14/92	57 FR 36605	(c)(45)	Part Env-A 803 is not part of the approved SIP.
Testing Requirements	CH air 800	1/17/92	5/25/93	58 FR 29974	(c)(47)	Part Env-A 805 Capture Efficiency Test Procedures
Owner or Operator Obligations	CH Air 900	12/17/81	3/15/83	48 FR 10830	(c)(22)	
	Env-A 900	11/16/89	6/13/91	56 FR 27197	(c)(43)	Sections Env-A 901.021–.022 and 901.05 added; Revision to Section Env-A 901.02.
		12/24/90	8/14/92	57 FR 36605	(c)(45)	
Prevention, Abatement, and Control of Open Source Air Pollution.	CH Air 1000	12/17/81	3/15/83	48 FR 10830	(c)(22)	Part Air 1002 is not part of the approval SIP.
	Env-A 1000	12/24/90	8/14/92	57 FR 36605	(c)(45)	Part Env-A 1002 is not part of the approval SIP.
Open-Air Burning	Env-A 1001	5/19/89	8/19/94.	59 FR 42768	(c)(40)	1001.02
Prevention, Abatement, and Control of Stationary Source Air Pollution Part.	CH Air 1200	6/17/82	3/15/83	48 FR 10830	(c)(22)	Section Air 1201.07 and Part Air 1206 are not part of the approved SIP.
		2/19/80	10/31/83	48 FR 50077	(c)(27)	Revisions to Section 1204.02(c) and 1204.21(j); Section 1204.17 added.
		7/21/83	2/01/84	49 FR 3989	(c)(28)	Revision to Section Air 1204.01.
		2/16/84	6/01/84	49 FR 24724	(c)(30)	Section Air 1201.05(e) added.
		12/20/84	9/17/87	52 FR 35082	(c)(37)	Revisions to Sections Air 1202.07–.09; Section Air 1202.10 added.
Prevention, Abatement and Control of Stationary Source Air Pollution.	CH air 1200	1/17/92	5/25/93	58 FR 29974	(c)(47)	Part Env-A Sections 1204.02; 1204.04; 1204.05 through 1204.08; 1204.14 through 1204.15.

	Env-A 1200	11/16/89	6/13/91	56 FR 27197	(c)(43)	Revisions to Sections Env-A 1204.01–.16; Section Env-A 1204.19 added.
		12/24/90	8/14/92	57 FR 36605	(c)(45)	Section Env-A 1206.03 is not part of the approved SIP.
	Env–A 1200	1/17/92	1/19/93	58 FR 4904	(c)(46)	Revisions to Section Env–A 1204.12.

[1] These regulations are applicable statewide unless otherwise noted in the COMMENTS section.
[2] When the New Hampshire Department of Environmental Services was established in 1987, the citation chapter title for the air regulations changed from CH Air to Env-A.

[50 FR 767, Jan. 7, 1985, as amended at 50 FR 10005, Mar. 13, 1985; 52 FR 3118, Feb. 2, 1987; 52 FR 12164, Apr. 15, 1987; 52 FR 35082, Sept. 17, 1987; 52 FR 47393, Dec. 14, 1987; 56 FR 27199, June 13, 1991; 56 FR 40253, Aug. 14, 1991; 57 FR 36605, Aug. 14, 1992; 58 FR 4904, Jan. 19, 1993; 58 FR 29974, May 25, 1993; 59 FR 42768, Aug. 19, 1994]

§ 52.1526 [Reserved]

§ 52.1527 Rules and regulations.

(a) [Reserved]

(b) The following elements are not part of the approved SIP:

(1) Intergovernmental consultations

(2) Public notification

(3) Conflict of Interest

(4) Non-SIP regulations' numbers listed below:

- Chapter Env-A 100: Sections Env-A 101.21, .27, .33, .51, .53, .58., .63 and
- 98; and Parts Env-A 102–103
- Chapter Env-A 200: Part Env-A 206; Part Env-A 208; and Sections 209.01–.04
- Chapter Env-A 300: Part Env-A 304
- Chapter Env-A 400: Section Env-A 405.05(c)–(d) and Part Env-A 406
- Chapter Env-A 500: Parts Env-A 501–506
- Chapter Env-A 600: Sections Env-A 603.02(p), 603.03(f)–(g)
- Chapter Env-A 800: Part Env-A 803
- Chapter Env-A 1000: Part Env-A 1002
- Chapter Env-A 1100:Part Env-A 1101
- Chapter Env-A 1200: Sections Env-A 1206.03
- Chapter Env-A 1300; Parts Env-A 1301–1305

[48 FR 10833, Mar. 15, 1983, as amended at 48 FR 48665, Oct. 20, 1983; 50 FR 51250, Dec. 16, 1985; 57 FR 36607, Aug. 14, 1993]

§ 52.1528 [Reserved]

§ 52.1529 Significant deterioration of air quality.

(a) The requirements of sections 160 through 165 of the Clean Air Act are not met, since the plan does not include approvable procedures for preventing the significant deterioration of air quality.

(b) Regulations for preventing significant deterioration of air quality. The provisions of § 52.21 (b) through (w) are hereby incorporated and made a part of the applicable state plan for the State of New Hampshire.

(c) The revisions promulgated on October 17, 1988 (53 FR 40671) to §§ 52.21 (b) through (w) including increment provisions for nitrogen dioxide are hereby incorporated and made a part of the applicable State Implementation Plan for the State of New Hampshire. The effective date of the revisions promulgated on October 17, 1988 to §§ 52.21 (b) through (w) are hereby advanced from November 19, 1990 to October 17, 1989 in the State of New Hampshire.

[43 FR 26410, June 19, 1978, as amended at 45 FR 52741, Aug. 7, 1980; 54 FR 32972, Aug. 11, 1989]

§ 52.1530 Requirements for State implementation plan revisions relating to new motor vehicles.

New Hampshire must comply with the requirements of § 51.120.

[60 FR 4737, Jan. 24, 1995]

§ 52.1531 Visibility protection.

(a) The requirements of section 169A of the Clean Air Act are not met, because the plan does not include approvable procedures for protection of visibility in mandatory Class I Federal areas.

(b) Regulation for visibility monitoring and new source review. The provisions of §§ 52.26 and 52.28 are hereby incorporated and made a part of the applicable plan for the State of New Hampshire.

(c) *Long-term strategy*. The provisions of § 52.29 are hereby incorporated and made part of the applicable plan for the State of New Hampshire.

[50 FR 28553, July 12, 1985, as amended at 52 FR 45137, Nov. 24, 1987]

§ 52.1532 Stack height review.

The State of New Hampshire has declared to the satisfaction of EPA that no existing emission limitations have been affected by stack height credits greater than good engineering practice or any other prohibited dispersion technique as defined in EPA's stack height regulations, as revised on July 8, 1985. This declaration was submitted to EPA on March 21, 1986. The State has further declared in a letter from Dennis Lunderville, dated July 25, 1986, that, ''As part of our new source review activities under the New Hampshire SIP and our delegated PSD authority, the New Hampshire Air Resources Agency will follow EPA's stack height regulation as revised in the FEDERAL REGISTER on July 8, 1985 (50 FR 27892).'' Thus, New Hampshire has satisfactorily demonstrated that its regulations meet 40 CFR 51.118 and 51.164.

[52 FR 49407, Dec. 31, 1987]

Subpart FF—New Jersey

§ 52.1570 Identification of plan.

(a) Title of plan: ''New Jersey State Implementation Plan to meet National Air Quality Standards.''

(b) The plan was officially submitted on January 26, 1972.

(c) The plan revisions listed below were submitted on the dates specified.

(1) Miscellaneous non-regulatory additions to the plan submitted on April 17, 1972, by the New Jersey Department of Environmental Protection.

(2) List of permits issued to sources allowing them particulate emissions in excess of 25 tons per year submitted on May 15, 1972, by the New Jersey Department of Environmental Protection.

(3) Legal opinion of State Attorney General on State's authority to make available to the public emission data reported by sources submitted on June 23, 1972, by the New Jersey Department of Law and Public Safety.

(4) Copies of the permits and certificates issued to sources exceeding 25 tons per year of particulate emissions submitted on July 6, 1972, by the New Jersey Department of Environmental Protection.

(5) Revisions correcting deficiencies in the new source review procedure submitted on March 22, 1973, by the Governor.

(6) Legal opinion of the State Attorney General on the State's authority to deny a permit to construct or modify a source submitted on April 18, 1973, by the New Jersey Department of Environmental Protection.

(7) Revision to sulfur-in-fuel regulation, section 7:1–3.1 of New Jersey Air Pollution Control Code, submitted on November 20, 1973, by the New Jersey Department of Environmental Protection.

(8) Revision to the control of open burning regulation, section 7:27–2.1 of the New Jersey Air Pollution Control Code, submitted on November 19, 1975, by the New Jersey Department of Environmental Protection.

(9) Letter, dated January 16, 1976, from the New Jersey Department of Environmental Protection stating that there would be no net increase in hydrocarbon emissions as a result of the revisions to N.J.A.C. 7:27–2.1.

(10) Regulation entitled: ''Control and Prohibition of Air Pollution by Volatile Organic Substances,'' New Jersey Administrative Code (N.J.A.C.) 7:27–16.1 et seq., submitted on January 8, 1976 by the New Jersey Department of Environmental Protection.

(11) Technical justification supporting N.J.A.C. 7:27–16 et seq. submitted on March 3, 1976.

(12) Revisions consisting of 16 administrative orders issued pursuant to the New Jersey Administrative Code (N.J.A.C.) 7:27–9.5(a) and technical support for these orders received on April 27, 1976 from the New Jersey Department of Environmental Protection.

(13) An administrative order directed to Hunt-Wesson Foods, Inc. in Bridgeton, Cumberland County and issued pursuant to the New Jersey Administrative Code (N.J.A.C.) 7:27–9.5(a), dated June 15, 1976, and technical support for this order received by EPA on April 27, 1976, both from the New Jersey Department of Environmental Protection.

(14) Revision to the Permits and Certificates regulation of the New Jersey Air Pollution Control Code, N.J.A.C. 7:27–8.1 et seq., submitted on June 8, 1976 by the New Jersey Department of Environmental Protection.

(15) Revision consisting of an administrative order issued on September 14, 1976 to Owens Illinois, Inc., Cumberland County, New Jersey pursuant to the New Jersey Administrative Code (N.J.A.C.) 7:27–9.5(a) and submitted on September 17, 1976 by the New Jersey Department of Environmental Protection.

(16) A revision submitted by the New Jersey Department of Environmental Protection consisting of an October 27, 1976 letter indicating the extension, to July 12, 1977, of ''variances'' to the provisions of the New Jersey Administrative Code (N.J.A.C.) 7:27–9.1 et seq., Sulfur in Fuel, for 18 facilities; and supplemental technical information submitted in a November 22, 1976 letter. The extended ''variances'' including all their terms and conditions are made a part of the New Jersey State Implementation Plan. The facilities affected by these ''variances'', their location and applicable sulfur in fuel oil

limitation until July 12, 1977 are as follows:

Source	Location	Sulfur in fuel oil limitation (percent by weight)
National Bottle Corp	Salem City, Salem County.	2.0
E. I. du Pont de Nemours & Co.	Deepwater, Salem County.	1.5
Heinz-USA	Salem City, Salem County.	2.0
B. F. Goodrich Chemical Co.	Pedricktown, Salem County.	1.5
Anchor Hocking Corp ...	Salem City, Salem County.	2.0
Atlantic City Electric Deepwater Station.	Penns Grove, Salem County.	1.5
E. I. du Pont de Nemours & Co.	Carney's Point, Salem County.	1.5
Mannington Mills, Inc	Salem City, Salem County.	2.0
Atlantic City Electric B. L. England Station.	Beesley Point, Cape May County.	2.0
Hunt Wesson Foods, Inc.	Bridgeton City, Cumberland County.	2.5
Kerr Glass Manufacturing Corp.	Millville City, Cumberland County.	2.5
Owens Illinois, Inc., Kimble Products Division.	Vineland City, Cumberland County.	2.5
Leone Industries	Bridgeton City, Cumberland County.	2.5
Owens Illinois, Inc	.....do	1.5
Progresso Food Corp ...	Vineland City, Cumberland County.	2.5
Bridgeton Dying & Finishing Corp.	Bridgeton City, Cumberland County.	2.5
Whitehead Bros. Co	Haleyville, Cumberland County.	2.5
Vineland Chemical Co	Vineland City, Cumberland County.	2.5

(17) A revision submitted by the New Jersey Department of Environmental Protection consisting of a January 10, 1978 letter indicating the extension, to July 12, 1978, of ''variances'' to the provisions of the New Jersey Administrative Code (N.J.A.C.) 7:27—9.1 et seq., Sulfur in Fuel, for 17 facilities and accompanying supplemental information. The extended ''variances'' including all their terms and conditions are made a part of the New Jersey State implementation plan. The facilities affected by these ''variances,'' their locations, and applicable sulfur-in-fuel-oil limitations until July 12, 1978 are as follows:

Source	Location	Sulfur in fuel oil limitation (percent by weight)
National Bottle Corp	Salem City, Salem County.	2.0
E. I. du Pont de Nemours & Co.	Deepwater, Salem County.	1.5
Heinz-U.S.A	Salem City, Salem County.	2.0
B. F. Goodrich Chemical Co.	Pedricktown, Salem County.	1.5
Anchor Hocking Corp ...	Salem City, Salem County.	2.0
Atlantic City Electric, Deepwater Station.	Penns Grove, Salem County.	1.5
E. I. du Pont de Nemours & Co.	Carney's Point, Salem County.	1.5
Mannington Mills, Inc	Salem City, Salem County.	2.0
Atlantic City Electric, B. L. England Station.	Beesley Point, Cape May County.	2.0
Kerr Glass Manufacturing Corp.	Millville City, Cumberland County.	2.5
Owens Illinois, Inc., Kimble Products Division.	Vineland City, Cumberland County.	2.5
Leone Industries	Bridgeton, Cumberland County.	2.5
Progresso Food Corp ...	Vineland City, Cumberland County.	2.5
Bridgeton Dyeing & Finishing Corp.	Bridgeton City, Cumberland County.	2.5
Vineland Chemical Co	Vineland City, Cumberland County.	2.5
Hunt-Wesson Foods, Inc.	Bridgeton, Cumberland County.	2.5
Owens Illinois, Inc	.....do	1.5

(18) A revision submitted by the New Jersey Department of Environmental Protection consisting of a June 26, 1978 letter indicating the extension, to January 12, 1979 or until such time as the State places into effect revised permanent sulfur-in-fuel-oil regulations, of ''variances'' to the provisions of the New Jersey Administrative Code (N.J.A.C.) 7:27–9.1 *et seq., Sulfur in Fuel,* for 17 facilities and accompanying supplemental information. The extended ''variances'' including all their terms and conditions are made a part of the New Jersey State Implementation Plan. The facilities affected by these ''variances'', their locations, and applicable sulfur-in-fuel-oil limitations until January 12, 1979 or until such time as the State places into effect and EPA approves revised permanent sulfur-in-fuel-oil regulations are as follow:

Source	Location	Sulfur in fuel oil limitation (percent by weight)
National Bottle Corp	Salem City, Salem County.	2.0
E. I. du Pont de Nemours & Co.	Deepwater, Salem County.	1.5
Heinz—U.S.A	Salem City, Salem County.	2.0
B. F. Goodrich Chemical Co.	Pedricktown, Salem County.	1.5
Anchor Hocking Corp ...	Salem City, Salem County.	2.0
Atlantic City Electric, Deepwater Station.	Penns Grove, Salem County.	1.5
E. I. du Pont de Nemours & Co.	Carney's Point, Salem County.	1.5
Mannington Mills, Inc	Salem City, Salem County.	2.0
Atlantic City Electric, B. L. England Station.	Beesley Point, Cape May County.	2.0
Kerr Glass Manufacturing Corp.	Milville City, Cumberland County.	2.5
Owens Illinois, Inc., Kimble Products Division.	Vineland City, Cumberland County.	2.5
Leone Industries	Bridgeton, Cumberland County.	2.5
Progresso Food Corp ...	Vineland City, Cumberland County.	2.5
Bridgeton Dyeing and Finishing Corp.	Bridgeton City, Cumberland County.	2.5
Vineland Chemical Co	Vineland City, Cumberland County.	2.5
Hunt-Wesson Foods, Inc.	Bridgeton, Cumberland County.	2.5
Owens Illinois, Inc	.....do	1.5

(19) A revision submitted by the New Jersey Department of Environmental Protection on July 6, 1978 consisting of amendments to the provisions of the New Jersey Administrative Code (N.J.A.C.) 7:27–10.1 *et seq., Sulfur in Coal,* and accompanying supplemental information.

(20) A revision consisting of all but one of the sections of the revised regulation, N.J.A.C. 7:27–6.1 *et seq.,* submitted by the New Jersey Department of Environmental Protection with a March 31, 1977 cover letter which also transmitted the basis and background document and the Report of the Public Hearing. The one section that is not approved as submitted by the State is Section 6.5, ''Variances.''

(21) A revision submitted by the New Jersey Department of Environmental Protection on August 10, 1978 consisting of amendments to the provisions of the New Jersey Administrative Code (N.J.A.C.) 7:27–9.1 *et seq., Sulfur in Fuels,* and accompanying supplemental information.

(22) A comprehensive revision for nonattainment areas entitled, ''Proposed New Jersey State Implementation Plan for the Attainment and Maintenance of Air Quality Standards,'' submitted, as required by Part D of the Clean Air Act, on December 29, 1978 by the New Jersey Department of Environmental Protection.

(23) Supplementary submittals, pertaining to the plan revision for nonattainment areas required by Part D of the Clean Air Act, from the New Jersey Department of Environmental Protection as follows:

A package dated April 17, 1979 from the New Jersey Department of Environmental Protection to EPA entitled, ''N.J. SIP Supplement 1,'' and covering the State's schedule for future actions, expected costs and sources of funding, ongoing consultation process, graphical representation of reasonable further progress, schedule for promulgation of emission offset rule, commitment to adoption of tall stack policy and comments on EPA's proposed tall stack policy, discussion and schedule for resolution of the Bridgeton particulate downwash problem, summary of particulate emissions inventories for non-attainment areas, request for extension for submittal of SIP for secondary TSP standard, and expanded explanation of current I/M program.

A Supplement 2 to the proposed SIP revision consisting of a cover letter dated June 20, 1979 and four attachments from the New Jersey Department of Environmental Protection to EPA covering a proposed version of the State's new source review regulation, a discussion of reasonable further progress with respect to volatile organic substance sources, the design values for ozone in the Metropolitan New York and Metropolitan Philadelphia Interstate Air Quality Control Regions, and a proposed version of the State's regulation for the control of volatile organic substances (VOS).

A submittal dated July 5, 1979 from the New Jersey Department of Environmental Protection to EPA covering the State's draft regulation controlling VOS, operating and maintenance procedures for open top tanks and surface cleaners covered under the State's draft VOS control regulation, and evaporative losses from VOS storage tanks.

A package consisting of a cover letter dated October 3, 1979 from the New Jersey Department of Environmental Protection to EPA and an accompanying report covering an analysis of the Bridgeton particulates downwash problem and the State's effort to

execute memoranda of understanding with its Metropolitan Planning Organization.

A cover letter received by EPA dated October 19, 1979 from the New Jersey Department of Environmental Protection together with the State's adopted regulation for control of VOS, N.J.A.C. 7:27–16.1 *et seq.*, and ''Report of Public Hearing and Basis for promulation .

A package consisting of a letter dated January 9, 1980 from the New Jersey Department of Environmental Protection to EPA covering the conditions on SIP approval which were listed by EPA in the proposed rulemaking notice for the SIP revision and four references covering the October 3, 1979 Bridgeton particulates analysis, an updated Bridgeton particulates analysis, and an energy analysis of certain VOS controls called for in N.J.A.C. 7:27–16.1 *et seq.* justifying the State's position on seasonal variances for certain VOS sources.

(24) A supplementary submittal, dated February 27, 1980 from the New Jersey Department of Environmental Protection consisting of five memoranda of understanding among the New Jersey Departments of Environmental Protection and Transportation and the following metropolitan planning organizations:

Atlantic County Urban Area Transportation Study
Cumberland County Urban Area Transportation Study
Delaware Valley Regional Planning Commission
Philipsburg Urban Area Transportation Study
Wilmington Metropolitan Area Planning Council

(25) Supplementary submittals, dated March 5, April 9 and April 10 from the New Jersey Department of Environmental Protection consisting of test methods to be used in determining compliance with the provisions of N.J.A.C. 7:27–16.1 *et seq.*, ''Control and Prohibition of Air Pollution by Volatile Organic Substances.''

(26) A supplementary submittal, dated April 22, 1980, from the New Jersey Department of Environmental Protection and the New Jersey Department of Transportation consisting of three documents entitled ''The Transportation Planning Process in New Jersey,'' ''Summary of Financial Resources for Transportation-Air Quality Planning,'' and ''Program for Selection of Needed Transportation Control Measures, April 1980.''

(27) A supplementary submittal dated August 5, 1980 from the New Jersey Department of Environmental Protection consisting of revisions to Subchapter 18 of the New Jersey Administrative Code, entitled, ''Control and Prohibitions of Air Pollution from Ambient Air Quality in Nonattainment Areas'' (Emission Offset Rule), N.J.A.C. 7:27–18.1 *et seq.*

(28) A supplementary submittal from the State of New Jersey Department of Environmental Protection, consisting of an Ambient Air Quality Monitoring SIP revision dated August 1.

(29) A June 30, 1980 submittal by the New Jersey Department of Environmental Protection (NJDEP) consisting of an Amended Consent Order entered into by NJDEP and the Atlantic City Electric Company. This revision to the New Jersey State Implementation Plan establishes a construction and testing schedule designed to bring units 1 and 2 at Atlantic City Electric Company's B.L. England Generating Station at Beesley's Point, New Jersey, into compliance with New Jersey Administrative Code (N.J.A.C.) 7:27–3.1 *et seq.*, Control and Prohibition of Smoke from Combustion of Fuel; N.J.A.C. 7:27–4.1 *et seq.*, Control and Prohibition of Particulates from Combustion of Fuel; and N.J.A.C. 7:27–10.1 *et seq.*, Sulfur in Coal, by March 31, 1982 and June 1, 1982, respectively.

(30) A supplementary submittal dated April 27, 1981, from the New Jersey Department of Environmental Protection consisting of newly adopted revisions to a regulation concerning the Control and Prohibition of Open Burning, N.J.A.C. 7:27–21 *et seq.*, an Order of Adoption, the Report of Public Hearing, and the Basis for the Proposed Amendments.

(31) A supplementary submittal dated July 8, 1981, from the New Jersey Department of Environmental Protection consisting of newly adopted revisions to Subchapter 10, Sulfur in Solid Fuels, N.J.A.C. 7:27–10.1 *et seq.*, an Order of Adoption, the Report of Public Hearing, and the Basis for the Proposed Amendments.

(32) Revisions submitted on March 17, 1982 and April 27, 1982 by the New Jersey State Department of Environmental Protection which grant ''cullet

variances'' to furnace number 2 of the Anchor Hocking Corporation's Salem plant and furnaces G, Y, J, K, L, M, R of the Owens-Illinois, Inc. Vineland plant. The ''cullet variances'' will remain in effect for up to two years from August 10, 1982.

(33) A revision submitted by the New Jersey Department of Environmental Protection on December 16, 1982 consisting of amendments to the provisions of the New Jersey Administrative Code (N.J.A.C.) 7:27–9.1 *et seq., Sulfur in Fuels,* to provide for ''sulfur dioxide bubbles'' and ''clean conversion incentives.''

(34) Revisions to the New Jersey State Implementation Plan submitted on November 23, 1982, January 18, 1983, February 14, 1983, July 11, 1983, July 28, 1983 and September 26, 1983 by the New Jersey Department of Environmental Protection.

(35) A supplementary submittal dated July 11, 1983, from the Department of Environmental Protection consisting of adopted revisions to: Subchapter 3—''Control and Prohibition of Smoke from Combustion of Fuel,'' dated October 12, 1977, Subchapter 4—''Control and Prohibition of Particles from Combustion of Fuel,'' dated October 12, 1977, and Subchapter 5—''Prohibition of Air Pollution,'' dated October 12, 1977, of Title 7, Chapter 27 of the New Jersey Administrative Code; the proposed Regulatory Amendments; the Report of the Public Hearing; and the Order of Adoption.

(36) A revision submitted by the New Jersey Department of Environmental Protection to allow U.S. Gypsum Co. temporarily to burn fuel oil with a sulfur content of 2.0 percent, by weight, at either Boiler #1, #2, or #3 at its Clark, New Jersey plant. The New Jersey submittal consists of an April 14, 1983 letter transmitting a State issued February 14, 1983 Public Notice and a letter dated March 14, 1983 transmitting an Administrative consent order detailing procedures to be used by the State to determine compliance. This revision will remain in effect until March 31, 1985 or until Boiler #4 is ready to burn coal, whichever occurs first.

(37) Three permanently adopted regulations were submitted on January 27, 1984 and February 1, 1984 regarding the operation of the inspection and maintenance program. These regulations pertain specifically to operating procedures for private inspection stations (New Jersey Administrative Code (N.J.A.C.) 13:20–33.1, 33.2, 33.50, and 33.51.), mechanic certification requirements (N.J.A.C. 13:20–32.4, 32.14, and 32.15), and specifications for exhaust gas analyzers (N.J.A.C. 7:27–15.1).

(38) The New Jersey State Implementation Plan for attainment and maintenance of the lead standards was submitted on May 1 and August 15, 1984, and on April 22, April 29, May 17, and July 16, 1985 by the New Jersey Department of Environmental Protection.

(i) Incorporated by reference.

(A) Revisions to N.J.A.C. 7:27–8, ''Permits and Certificates,'' effective April 5, 1985.

(B) Revisions to N.J.A.C. 7:27–13, ''Ambient Air Quality Standards,'' effective June 25, 1985.

(C) Revisions to N.J.A.C. 7:27–18, ''Control and Prohibition of Air Pollution from New or Altered Sources Affecting Ambient Air Quality (Emission Offset Rule),'' effective March 11, 1985.

(D) A July 16, 1985 letter from the Department of Environmental Protection; with attachment of letter dated July 15, 1985, contains schedules for revising N.J.A.C. 7:27–6, ''Control and Prohibition of Particles from Manufacturing Process,'' to incorporate maximum allowable emission rates for lead and for adopting a new section, N.J.A.C. 7:27–19, to govern the combustion of liquid fuels, if necessary.

(E) ''RACT-plus studies'' to determine strategies to eliminate violation of the lead standards in the vicinity of Heubach, Inc., Newark and Delco Remy, New Brunswick will be completed by November 1, 1985 and control measures will be selected by January 1986.

(ii) Additional material.

(A) Narrative submittal of the Lead SIP, including attainment demonstration, air quality data and summary of both current and projected lead emissions.

(39) A revision to the plan for attainment of the particulate matter standards submitted by the New Jersey Department of Environmental Protection

on February 21, March 14, and November 18, 1985.

(i) Incorporation by reference.

(A) Revisions to N.J.A.C. 7:27–14, ''Control and Prohibition of Air Pollution from Diesel-Powered Motor Vehicles,'' effective July 1, 1985.

(B) Adoption of a new section of N.J.A.C. 7:27B–4 entitled ''Air Test Method 4, Testing Procedures for Motor Vehicles,'' effective July 1, 1985.

(C) The following sections of N.J.A.C. 16:53 ''Autobus Specifications which was effective on October 17, 1983:

Subchapter 3, Autobus Specifications
3.23 Certificate of Inspection
3.24 Maintenance and inspection
3.27 Exhaust Systems
Subchapter 6, Autobus Specifications for Small Bus
6.15 Exhaust System
6.21 Certificate of Inspection
6.30 Maintenance and inspection
Subchapter 7, Specifications for Special Autobus Type Recreational Vehicles
7.14 Exhaust Systems
7.17 Certificate of Inspection
7.23 Maintenance and inspection
Subchapter 8, Specifications for Sedan Type Autobuses
8.15 Exhaust System
8.22 Certificate of Inspection
8.25 Maintenance and inspection

(40) A revision to the New Jersey State Implementation Plan for attainment and maintenance of the ozone standards was submitted on April 22, 1985 by the New Jersey Department of Environmental Protection.

(i) Incorporated by reference.

(A) Table 2 in section 18.4(b) of N.J.A.C. 7:27–18, ''Control and Prohibition of Air Pollution from New or Altered Sources Affecting Ambient Air Quality (Emission Offset Rule),'' effective March 11, 1985.

(41) A revision to the New Jersey State Implementation Plan (SIP) for lead was submitted on December 1, 1986, by the New Jersey Department of Environmental Protection.

(i) Incorporated by reference.

(A) The following operating permit amendments for the Delco Remy facility in New Brunswick:

Permit amendment numbers	Permit amendment dates
286–1166 through 286–1184	All permits effective 9/24/86.

(B) The following operating permit amendments for the Heubach Inc. facility in Newark:

Permit amendment numbers	Permit amendment dates
286–0523 through 286–0531	All permits effective 4/30/86.
286–0286, 286–0287, 286–0289, 286–0290.	All permits effective 2/26/86.

(ii) Additional material.

(A) Technical documentation of ambient modeling and monitoring for lead in the vicinity of Delco Remy, New Brunswick.

(B) Technical documentation of ambient modeling and monitoring for lead in the vicinity of Heubach Inc., Newark.

(42) A revision to the New Jersey State Implementation Plan (SIP) for lead submitted on July 23, 1987 by the New Jersey Department of Environmental Protection (NJDEP) and finalized on September 25, 1987.

(i) Incorporation by reference.

(A) A March 4, 1986 Administrative Order and Notice of Civil Administrative Penalty Assessment (Log # A860244) from the New Jersey Department of Environmental Protection to the United States Metals Refining Company (USMR).

(B) Letter of March 11, 1987 from Greenberg and Prior, attorneys for USMR, to Anthony J. McMahon, Department of Environmental Protection, Trenton, New Jersey.

(ii) Additional material.

(A) July 1987 Modeling Analysis for the Anchor Abrasives facility.

(B) Summary of public comments and response to comments for the revision of the N.J. SIP for lead in the vicinity of USMR.

(C) USMR's comments on the revised N.J. SIP for lead in the vicinity of USMR.

(43) [Reserved]

(44) A revision to the State Implementation Plan for Ozone submitted on October 13, 1987 by the New Jersey Department of Environmental Protection.

(i) Incorporation by reference.

Subchapter 2A of chapter 26, title 7 of the New Jersey Administrative Code, ''Additional, Specific Disposal Regulations for Sanitary Landfills,'' effective June 1, 1987.

(ii) Additional material.

New Jersey Department of Environmental Protection memorandum on landfill gas emissions and control, dated October 7, 1987.

(45) Revisions to the New Jersey State Implementation Plan (SIP) for ozone submitted on January 27, 1989 by the New Jersey State Department of Environmental Protection (NJDEP) for its state gasoline volatility program, including any waivers that may be granted under the program by the state. In 1989, the control period will begin on June 30.

(i) Incorporation by reference. Subchapter 25 of chapter 27, title 7 of the New Jersey Administrative Code entitled ''Control and Prohibition of Air Pollution by Vehicular Fuels,'' adopted on January 27, 1989 and effective on February 21, 1989.

(ii) Additional material. April 27, 1989 letter from Christopher Daggett, NJDEP, to William Muszynski, EPA Region II.

(46) Revisions to the New Jersey State Implementation Plan (SIP) for ozone concerning motor vehicle refueling controls dated February 22, 1988, submitted by the New Jersey Department of Environmental Protection (NJDEP).

(i) Incorporation by reference:

Amendments to sections 16.1 and 16.3 of subchapter 16 of title 7 of the New Jersey Administrative Code, entitled ''Control and Prohibition of Air Pollution by Volatile Organic Substances,'' effective January 19, 1988.

(ii) Additional material:

(A) February 22, 1988 letter from Jorge Berkowitz, NJDEP, to Conrad Simon, EPA, requesting EPA approval of the amendments to subchapter 16.

(B) April 18, 1988 letter from Jorge Berkowitz, NJDEP, to Conrad Simon, EPA, providing copies of the test methods and permit approval conditions applicable to Stage II vapor recovery systems in New Jersey.

(d) Plan revisions were submitted on September 26, 1972.

(47) Revisions to the New Jersey State Implementation Plan (SIP) for ozone concerning the motor vehicle inspection and maintenance (I/M) program dated March 6, 1987, submitted by the New Jersey Department of Environmental Protection (NJDEP).

(i) Incorporation by reference.

(A) Amendments to title 7, chapter 27, subchapter 15 of the New Jersey Administrative Code, entitled ''Control and Prohibition of Air Pollution From Gasoline-Fueled Motor Vehicles,'' effective January 21, 1985.

(B) Amendments to title 13, chapter 20, subchapter 28 of the New Jersey Administrative Code, entitled ''Enforcement Service Inspection of New Passenger Vehicles and New Motorcycles,'' effective January 21, 1985.

(ii) Additional material.

(A) July 24, 1990 letter from David West, NJDEP, to Rudolph Kapichak, EPA, submitting the results of the study by Pacific Environmental Services on the health risks of performing the fuel inlet restrictor inspections.

(B) July 1, 1990 letter from David West, NJDEP, to Rudolph Kapichak, EPA, notifying of the resumption of fuel inlet restrictor inspections.

(48) A revision submitted on June 3, 1988 by the New Jersey Department of Environmental Protection (NJDEP) to revise its implementation plan to include revised testing procedures.

(i) Incorporation by reference: New Jersey Administrative Code 7:27B–3, ''Air Test Method 3—Sampling and Analytical Procedures for the Determination of Volatile Organic Substances from Source Operations,'' effective 9/8/86.

(ii) Additional material: October 15, 1990 letter from William O'Sullivan, NJDEP to William S. Baker, EPA.

(49) Revisions to the New Jersey State Implementation Plan (SIP) for ozone concerning the control of fugitive gasoline vapors resulting from the loading of marine transport vessels, dated June 20, 1990, submitted by the New Jersey Department of Environmental Protection and Energy (NJDEPE).

(i) Incorporation by reference.

(A) Amendments to Title 7, Chapter 27, Subchapter 16 of the New Jersey Administrative Code, entitled ''Control and Prohibition of Air Pollution by Volatile Organic Substances,'' effective February 6, 1989.

(B) Amendment to Title 7, Chapter 27, Subchapter 16 of the New Jersey Administrative Code, entitled ''Control and Prohibition of Air Pollution by

Volatile Organic Substances,'' effective December 4, 1989.

(ii) Additional material.

(A) June 20, 1990, letter from Anthony J. McMahon, NJDEPE, to Conrad Simon, EPA, requesting EPA approval of the amendments to subchapter 16.

(50) Regulation entitled ''Volatile Organic Substances in Consumer Products'' N.J.A.C. 7–27–23.1 *et seq.,* dated July 30, 1990, submitted by the New Jersey Department of Environmental Protection and Energy (NJDEPE).

(i) Incorporation by reference: (A) Title 7, Chapter 27, Subchapter 23 of the New Jersey Administrative Code, entitled ''Volatile Organic Substances in Consumer Products'' effective February 21, 1989.

(B) Amendment to Title 7, Chapter 27, Subchapter 23 of the New Jersey Administrative Code, entitled ''Volatile Organic Substances in Consumer Products'' effective December 12, 1989.

(C) Amendment to Title 7, Chapter 27, Subchapter 23 of the New Jersey Administrative Code, entitled ''Volatile Organic Substances in Consumer Products'' effective August 9, 1990.

(ii) Additional material: (A) July 30, 1990 letter from Anthony J. McMahon, NJDEPE, to Conrad Simon, EPA, requesting EPA approval of Subchapter 23.

(51) Revisions to the New Jersey State Implementation Plan (SIP) for ozone concerning the control of volatile organic compounds from stationary sources, dated March 31, 1987, December 7, 1989, and March 13, 1992, submitted by the New Jersey State Department of Environmental Protection and Energy (NJDEPE).

(i) Incorporation by reference.

(A) Amendments to Chapter 27, Title 7 of the New Jersey Administrative Code Subchapter 16, ''Control and Prohibition of Air Pollution by Volatile Organic Substances,'' effective September 22, 1986,

(B) Amendments to Chapter 27, Title 7 of the New Jersey Administrative Code Subchapter 16, ''Control and Prohibition of Air Pollution by Volatile Organic Substances,'' effective June 19, 1989,

(C) Amendments to Chapter 27, Title 7 of the New Jersey Administrative Code: Subchapter 8, ''Permits and Certificates, Hearings, and Confidentiality,'' effective March 2, 1992; Subchapter 16, ''Control and Prohibition of Air Pollution by Volatile Organic Compounds,'' effective March 2, 1992, Subchapter 17, ''Control and Prohibition of Air Pollution by Toxic Substances,'' effective March 2, 1992; Subchapter 23, ''Prevention of Air Pollution by Architectural Coatings and Consumer Products,'' effective March 2, 1992; Subchapter 25, ''Control and Prohibition of Air Pollution from Vehicular Fuels,'' effective March 2, 1992; and Subchapter 3, ''Air Test Method 3: Sampling and Analytic Procedures for the Determination of Volatile Organic Compounds from Source Operations,'' effective March 2, 1992.

(ii) Additional material.

(A) March 31, 1987, letter from Jorge Berkowitz, NJDEP, to Conrad Simon, EPA requesting EPA approval of the amendments to Subchapter 16.

(B) December 7, 1989, letter from Anthony McMahon, NJDEP, to Conrad Simon, EPA requesting EPA approval of the amendments to Subchapter 16.

(C) March 13, 1992, letter from Nancy Wittenberg, NJDEPE, to Conrad Simon, EPA requesting EPA approval of the amendments to Subchapter 16.

(52) Amendments submitted on April 21, 1993 by the New Jersey Department of Environmental Protection and Energy to New Jersey Air Code 7:27–25 revising the testing requirements to gasoline providers in New Jersey are subject.

(i) Incorporation by reference:

(A) Amendments to Chapter 27, Title 7 of the New Jersey Administrative Code Subchapter 25, ''Control and Prohibition of Air Pollution from Vehicular Fuels,'' effective September 3, 1991.

(53) A revision to the New Jersey State Implementation Plan (SIP) for an Emission Statement Program dated February 19, 1993, submitted by the New Jersey Department of Environmental Protection and Energy.

(i) Incorporation by reference:

(A) Title 7, Chapter 27, Subchapter 21, of the New Jersey Administrative Code entitled, ''Emission Statements,'' effective March 15, 1993.

(ii) Additional information:

(A) May 24, 1993 letter from John Elston to Conrad Simon, EPA, transmitting supporting documentation necessary for approval of the SIP revisions. These items included:

(*1*) Notice of Adoption, March 15, 1993.

(*2*) Justification of Gasoline Dispensing Facility Exemption.

(B) October 29, 1993 letter from John Elston to Conrad Simon, EPA, transmitting legislative language to reflect change in New Jersey's Air Pollution Control Act regarding confidentiality provisions.

(C) February 3, 1994 letter from John Elston to Conrad Simon, EPA, requesting the use of EPA's Emission Statement waiver provision.

(54)–(56) [Reserved]

(57) The redesignation and maintenance plan for Camden County and the Nine not-classified areas (the City of Trenton, the City of Burlington, the Borough of Penns Grove (part), the Borough of Freehold, the City of Morristown, the City of Perth Amboy, the City of Toms River, the Borough of Somerville, and the City of Atlantic City) submitted by the New Jersey Department of Environmental Protection on September 28, 1995, as part of the New Jersey SIP. The 1990 Baseline CO Emission Inventory for the State of New Jersey was submitted on November 15, 1992 and a Technical Update was submitted on November 21, 1994.

(i) Incorporation by reference.

(A) ''New Jersey Carbon Monoxide State Implementation Plan Redesignation And Maintenance Plan For Camden County,'' section 5.f, effective date September 28, 1995.

(B) ''New Jersey Carbon Monoxide State Implementation Plan Redesignation and Maintenance Plan for the Nine Not-Classified Nonattainment Areas,'' section 5.f, effective date September 28, 1995.

(ii) Additional material.

(A) ''New Jersey Carbon Monoxide State Implementation Plan Redesignation And Maintenance Plan For Camden County'' with appendices, September 28, 1995.

(B) ''New Jersey Carbon Monoxide State Implementation Plan Redesignation and Maintenance Plan for the Nine Not-Classified Nonattainment Areas'' with appendices, September 28, 1995.

(58) Revisions to the New Jersey State Implementation Plan (SIP) for carbon monoxide concerning the oxygen content of motor vehicle gasoline, dated November 15, 1992 submitted by the New Jersey State Department of Environmental Protection (NJDEP).

(i) Incorporation by reference.

(A) Amendments to Chapter 27, Title 7 of the New Jersey Administrative Code Chapter 27, Subchapter 25, ''Control and Prohibition of Air Pollution by Vehicular Fuels,'' effective October 5, 1992 (as limited in § 52.1605).

[37 FR 10880, May 31, 1972]

EDITORIAL NOTE: For FEDERAL REGISTER citations affecting § 52.1570, see the List of CFR Sections Affected in the Finding Aids section of this volume.

§ 52.1571 Classification of regions.

The New Jersey plan was evaluated on the basis of the following classifications:

Air quality control region	Pollutant				
	Particulate matter	Sulfur oxides	Nitrogen dioxide	Carbon monoxide	Photochemical oxidants (hydrocarbons)
New Jersey-New York-Connecticut Interstate	I	I	I	I	I
Metropolitan Philadelphia Interstate	I	I	III	I	I
Northeast Pennsylvania-Upper Delaware Valley Interstate	I	II	III	III	III
New Jersey Intrastate	III	IA	III	I	III

[37 FR 10880, May 31, 1972, as amended at 39 FR 16347, May 8, 1974]

§ 52.1572 [Reserved]

§ 52.1573 Approval status.

With the exceptions set forth in this subpart, the Administrator approves New Jersey's plans for attainment and maintenance of the national ambient air quality standards under section 110 of the Clean Air Act. Furthermore, the Administrator finds that the plan satisfies all requirements of Part D, Title I, of the Clean Air Act, as amended in 1977, except as noted below in § 52.1581. In addition, continued satisfaction of the requirements of Part D for the ozone portion of the SIP depends on the adoption and submittal of RACT requirements by July 1, 1980 for the sources covered by CTGs issued between January, 1978 and January, 1979 and adoption and submittal by each subsequent January of additional RACT requirements for sources covered by CTGs issued by the previous January.

[45 FR 15541, Mar. 11, 1980]

§ 52.1574 General requirements.

(a) The requirements of § 51.116(c) of this chapter are not met since the legal authority to provide for public availability of emission data is inadequate.

(b) *Regulation for public availability of emission data.* (1) Any person who cannot obtain emission data from the Agency responsible for making emission data available to the public, as specified in the applicable plan, concerning emissions from any source subject to emission limitations which are part of the approved plan may request that the appropriate Regional Administrator obtain and make public such data. Within 30 days after receipt of any such written request, the Regional Administrator shall require the owner or operator of any such source to submit information within 30 days on the nature and amounts of emissions from such source and any other information as may be deemed necessary by the Regional Administrator to determine whether such source is in compliance with applicable emission limitations or other control measures that are part of the applicable plan.

(2) Commencing after the initial notification by the Regional Administrator pursuant to paragraph (b)(1) of this section, the owner or operator of the source shall maintain records of the nature and amounts of emissions from such source and any other information as may be deemed necessary by the Regional Administrator to determine whether such source is in compliance with applicable emission limitations or other control measures that are part of the plan. The information recorded shall be summarized and reported to the Regional Administrator, on forms furnished by the Regional Administrator, and shall be submitted within 45 days after the end of the reporting period. Reporting periods are January 1 to June 30 and July 1 to December 31.

(3) Information recorded by the owner or operator and copies of this summarizing report submitted to the Regional Administrator shall be retained by the owner or operator for 2 years after the date on which the pertinent report is submitted.

(4) Emission data obtained from owners or operators of stationary sources will be correlated with applicable emission limitations and other control measures that are part of the applicable plan and will be available at the appropriate regional office and at other locations in the state designated by the Regional Administrator.

[39 FR 34537, Sept. 26, 1974, as amended at 40 FR 55331, Nov. 28, 1975; 51 FR 40676, Nov. 7, 1986]

§ 52.1575 Legal authority.

(a) The requirements of § 51.230(f) of this chapter are not met, since section 26:2C–9 of the New Jersey Air Pollution Control Law could, in some circumstances, prohibit the disclosure of emission data to the public. Therefore, section 26:2C–9 is disapproved.

[39 FR 34537, Sept. 26, 1974, as amended at 51 FR 40676, Nov. 7, 1986]

§ 52.1576 Control strategy: Nitrogen dioxide.

(a) The requirements of § 52.14(c)(3) of this chapter as of May 8, 1974 (39 FR 16346), are not met since the plan does not provide for the degree of nitrogen oxides emission reduction attainable through the application of reasonably available control technology in the

New Jersey portions of the New Jersey-New York-Connecticut Region.

[37 FR 10880, May 31, 1972, as amended at 39 FR 16347, May 8, 1974; 51 FR 40677, Nov. 7, 1986]

§ 52.1577 Compliance schedules.

(a) [Reserved]

(b) The requirements of § 51.261 of this chapter are not met since Chapter 7, section 7.1(c) of New Jersey's ''Air Pollution Control Code'' permits certain sources to defer compliance with Chapter 7 until after the required date for attainment of the national standards for particulate matter.

(c) The requirements of § 51.262(a) of this chapter are not met since Chapter 7 of New Jersey's ''Air Pollution Control Code'' does not provide for periodic increments of progress toward compliance for those sources with compliance schedules extending over a period of 18 or more months.

(d) *Regulation for increments of progress.* (1) Except as provided in paragraph (d)(2) of this section, the owner or operator of any stationary source in the State of New Jersey to which an exception extending beyond January 31, 1974, is applicable under Chapter 7, section 7.1(c) of the New Jersey Air Pollution Control Code shall, no later than 120 days following the effective date of this paragraph, submit to the Administrator for approval, a proposed compliance schedule that demonstrates compliance with the emission limitations prescribed by Chapter 7 of the New Jersey Air Pollution Control Code as expeditiously as practicable but no later than July 31, 1975. The compliance schedule shall provide for periodic increments of progress towards compliance. The dates for achievement of such increments shall be specified. Increments of progress shall include, but not be limited to: Submittal of the final control plan to the Administrator; letting of necessary contracts for construction or process changes or issuance of orders for the purchase of component parts to accomplish emission control or process modification; initiation of onsite construction or installation of emission control equipment or process change; completion of onsite construction or installation of emission control equipment or process modification; and final compliance.

(2) Where any such owner or operator demonstrates to the satisfaction of the Administrator that compliance with the applicable regulations will be achieved on or before January 31, 1974, no compliance schedule shall be required.

(3) Any owner or operator required to submit a compliance schedule pursuant to this paragraph shall within 5 days after the deadline for each increment of progress, certify to the Administrator whether or not the required increment of the approved compliance schedule has been met.

(4) Any compliance schedule adopted by the State and approved by the Administrator shall satisfy the requirements of this paragraph for the affected source.

[37 FR 10880, May 31, 1972, as amended at 37 FR 23090, Oct. 28, 1972; 38 FR 12713, May 14, 1973; 40 FR 30962, July 24, 1975; 51 FR 40676, 40677, Nov. 7, 1986; 54 FR 25258, June 14, 1989]

§ 52.1578 Review of new sources and modifications.

(a) Subchapter 18 of the New Jersey Administrative Code, entitled, ''Control and Prohibitions of Air Pollution from Ambient Air Quality in Nonattainment Areas (Emission Offset Rule),'' N.J.A.C. 7:27–18.1 *et seq.*, as submitted to EPA on August 5, 1980 by the New Jersey Department of Environmental Protection, is approved for the entire State of New Jersey, with the following provisions:

(1) The definition of ''significant emission increase'' as it appears in section 7:27–18.1, entitled, ''Definitions,'' is disapproved. The following definition of ''significant emission increase'' is applicable: ''An increase, since December 21, 1976, in the rate of allowable emissions, including fugitive pollutant emissions, at a facility of any criteria pollutant greater than or equal to 50 tons per year, 1,000 pounds per day, or 100 pounds per hour, not including decreases in the rates of allowable emissions except where such decreases are contemporaneous with emission increases. The increase in the rates of allowable emissions shall be the cumulative total of increases from all new or altered equipment for which permits

have been issued on or after December 21, 1976 and for which permit applications have been received by the Department, and the fugitive emissions associated with that equipment. The hourly and daily rates shall apply only with respect to a pollutant for which a national ambient air quality standard for a period not exceeding 24 hours has been established.

(2) Subsection (e)(1) under section 7:27–18.2, entitled, ''General Provisions,'' is disapproved and replaced with the following: ''The requirements of paragraphs (c)(3), (c)(4), and (c)(5) of this section shall again become applicable when proposed new construction or alterations at the facility would cause the increase in the rate of allowable emissions of that criteria pollutant to again exceed 50 tons per year, 1,000 pounds per day, or 100 pounds per hour whichever is most restrictive. The accumulation of increases in the rate of allowable emissions shall resume from zero after each application of paragraphs (c)(3) and (c)(4) of this section.''

[39 FR 7282, Feb. 25, 1974, as amended at 46 FR 21996, Apr. 15, 1981; 51 FR 40677, Nov. 7, 1986; 60 FR 33923, June 29, 1995]

§ 52.1579 Intergovernmental cooperation.

(a) The requirements of subpart M of this chapter are not met since the plan does not adequately describe the responsibilities of local agencies.

[37 FR 10880, May 31, 1972, as amended at 51 FR 40677, Nov. 7, 1986]

§§ 52.1580—52.1581 [Reserved]

§ 52.1582 Control strategy and regulations: Ozone (volatile organic substances) and carbon monoxide.

(a) Subchapter 16 of the New Jersey Administrative Code, entitled ''Control and Prohibition of Air Pollution by Volatile Organic Substances,'' N.J.A.C. 7:27–16.1 et seq. as revised on December 31, 1981 and effective March 1, 1982, is approved with the following provisions and conditions:

(1) Subsections 16.6(c)(4) and 16.6(c)(5) are approved. The State must comply with the public participation procedures it submitted to EPA on December 19, 1980 and must supply to EPA a copy of each notice of a proposed bubble that it supplies the public. In addition, the State must promptly transmit to EPA notice setting forth each set of emission limits approved by the state pursuant to subsections 16.6(c)(4) and 16.6(c)(5) as well as the emission limitations previously applicable. Finally, the State must transmit any relevant additional material EPA may request, and it must notify the public of an approved set of emission limits at the time it transmits notice of those limits to EPA.

(2) Emission limitations required by subsections 16.5(a), 16.6(a) and 16.6(b) are applicable requirements of the New Jersey SIP for the purposes of section 113 of the Clean Air Act and shall be enforceable by EPA and by citizens in the same manner as other requirements of the SIP; except that emission limitations adopted by the State under and which comply with subsections 16.6(c) (4) and (5) shall be the applicable requirements of the New Jersey SIP in lieu of those contained in subsections 16.5(a), 16.6(a) and 16.6(b) and shall be enforceable by EPA and by citizens, if the State meets the requirements set out in paragraph (d)(1) of this section.

(3) Although EPA approves the variance provisions in subchapter 7:27–16.9 and 7:27–16.10, in order to be considered as part of the SIP, each variance issued under these provisions must be submitted to and approved by EPA as a SIP revision.

(4) The December 17, 1979 version of Subchapter 16 is approved as a part of the SIP only to the extent that it addresses compliance dates for Group I Control Techniques Guideline source categories.

(b) Subchapter 17 of the New Jersey Administrative Code, entitled ''Control and Prohibition of Air Pollution by Toxic Substances,'' N.J.A.C. 7:27–17.1 et seq. as revised on October 17, 1979 and effective December 17, 1979, is approved for the regulation of perchloroethylene dry cleaners, as further clarified in a New Jersey Department of Environmental Protection memorandum ''Subchapter 17 Requirements for Perchloroethylene Dry Cleaning Systems'' dated October 25, 1982.

(c) The November 15, 1993 SIP revision submitted by the New Jersey Department of Environmental Protection and Energy demonstrates the fulfillment of section 182(b)(2)(B) of the Clean Air Act for states to adopt RACT regulations for all sources for which EPA has issued a CTG before enactment of the 1990 Clean Air Act.

(d)(1) The base year ozone precursor emission inventory requirement of section 182(a)(1) of the 1990 Clean Air Act Amendments has been satisfied for the Atlantic City, New York/ Northern New Jersey/Long Island, Philadelphia/ Wilmington/ Trenton, and Allentown/ Bethlehem/Easton areas of New Jersey. The inventory was submitted on November 15, 1993 and amended on November 21, 1994 by the New Jersey Department of Environmental Protection as a revision to the ozone State Implementation Plan (SIP).

(2) The base year carbon monoxide emission inventory requirement of section 187(a)(1) of the 1990 Clean Air Act Amendments has been satisfied for the entire State. The inventory was submitted on November 15, 1992 and amended on September 28, 1995 by the New Jersey Department of Environmental Protection as a revision to the carbon monoxide State Implementation Plan.

[46 FR 20556, Apr. 6, 1981, and 48 FR 51480, Nov. 9, 1983, as amended at 59 FR 49211, Sept. 21, 1994; 60 FR 51354, Oct. 2, 1995; 60 FR 62746, Dec. 7, 1995]

§ 52.1583 Requirements for state implementation plan revisions relating to new motor vehicles.

New Jersey must comply with the requirements of § 51.120.

[60 FR 4737, Jan. 24, 1995]

§§ 52.1584—52.1600 [Reserved]

§ 52.1601 Control strategy and regulations: Sulfur oxides.

(a) The applicable limitation on the sulfur content of fuel marketed and used in New Jersey until and including March 15, 1974, as set forth in N.J.A.C. subchapter 7:1–3.1 is approved, except that the use of coal in the following utility plants and boiler units is not approved:[1]

[1] Action by the Administrator regarding coal conversion at the listed plants and units is being held in abeyance until the Administrator determines whether and to what extent that conversion cannot be deferred, based on analysis of fuel allocations for residual oil and coal in the Mid-Atlantic and New England States.

Company	Plant	City	Boiler unit(s)
Atlantic City Electric	Deepwaters	Deepwaters	5/7, 7/9, 3/5, 4/6.
Public Service Electric & Gas	Essex	Newark	All.
Do	Sewaren	Woodbridge	Do.
Do	Bergen	Bergen	No. 1.
Do	Burlington	Burlington	1–4.
Do	Kearney	Kearney	All.
Do	Hudson	Jersey City	No. 1.
Jersey Central Power & Light	Sayreville	Sayreville	All.
Do	E. H. Werner	South Amboy	Do.

(b) Before any steam or electric power generating facility in Zone 3, as defined in N.J.A.C. 7:27–10.1, burning fuel oil on June 4, 1979, having a rated hourly gross heat input greater than 200,000,000 British Thermal Units (BTU's), and capable of burning coal without major reconstruction or construction, which facility was in operation prior to May 6, 1968, or group of such facilities having a combined rated hourly capacity greater than 450,000,000 BTU's may be permitted by the State to convert to the use of coal, the State shall submit to EPA a copy of the proposed permit together with an air quality analysis employing methodology acceptable to EPA. If EPA determines, on the basis of the submitted analysis, that the proposed coal conversion will not interfere with the attainment or maintenance of air quality standards and will not be the cause for any Prevention of Significant Deterioration (PSD) increment to be exceeded, then the permit authorizing conversion may become effective immediately upon the publication of such a determination (as a Notice) in the FEDERAL REGISTER. If EPA determines that the submitted analysis is inadequate or that it shows that the proposed conversion will interfere with attainment or maintenance of air quality standards or cause any PSD increment to be exceeded, then EPA shall so inform the State of its determination, and the permit authorizing conversion shall not become effective and conversion shall not occur until an adequate analysis is submitted or, if necessary, until a control strategy revision which would require any necessary emission reductions is submitted by the State and placed into effect as an EPA approved revision to the implementation plan. In addition, this same procedure shall apply to any State permit applied for that would authorize a relaxation in the sulfur-in-coal limitation at any such facility, as defined above in this paragraph, having already been granted a permit to convert to coal.

(c) The U.S. Gypsum Co. in Clark, New Jersey is permitted to burn fuel oil with a sulfur content of 2.0 percent, by weight, at either Boiler #1, #2 or #3 until March 31, 1985 or until Boiler #4 is ready to burn coal, whichever occurs first. Such oil burning must conform with New Jersey requirements and conditions as set forth in applicable regulations and administrative orders.

[39 FR 1439, Jan. 9, 1974, as amended at 44 FR 31979, June 4, 1979; 44 FR 38471, July 2, 1979; 49 FR 30179, July 27, 1984]

§ 52.1602 [Reserved]

§ 52.1603 Significant deterioration of air quality.

(a) The requirements of sections 160 through 165 of the Clean Air Act are not met, since the plan does not include approvable procedures for preventing the significant deterioration of air quality.

(b) Regulations for preventing significant deterioration of air quality. The provisions of § 52.21(b) through (w) are hereby incorporated and made a part of the applicable state plan for the State of New Jersey.

[43 FR 26410, June 19, 1978, as amended at 45 FR 52741, Aug. 7, 1980]

§ 52.1604 Control strategy and regulations: Total suspended particulates.

(a) Any variance issued by the Department under N.J.A.C. Title 7, Chapter 27, section 6.5, subsections (a), (b), or (c) shall not exempt any person from the requirements otherwise imposed by N.J.A.C. 7:27–6.1 *et seq.; Provided* that the Administrator may approve such variance as a plan revision when the

provisions of this part, section 110(a)(3)(A) of the Act, and 40 CFR, part 51 (relating to approval of and revisions to State implementation plans) have been satisfied with respect to such variance.

(b) Particulates emissions from units 1 and 2 of the Atlantic City Electric Company's B.L. England Generating Station are limited to an emission rate of 0.5 lbs/million BTU until March 31, 1982 and June 1, 1982, respectively. The opacity associated with such emissions from these units during this period shall not exceed 40 percent. On and after March 31, 1982 for unit 1, and June 1, 1982 for unit 2, these units shall be limited to an emission rate of 0.1 lbs/million BTU, and the associated opacity shall not exceed 20 percent.

[44 FR 5427, Jan. 26, 1979 and 46 FR 26305, May 12, 1981]

§ 52.1605 EPA-approved New Jersey regulations.

State regulation	State effective date	EPA approved date	Comments
Title 7, Chapter 26			
Subchapter 2A, ''Additional, Specific Disposal Regulations for Sanitary Landfills.''	June 1, 1987	June 29, 1990, 55 FR 26689	
Title 7, Chapter 27			
Subchapter 1, ''General Provisions''	May 1, 1956	May 31, 1972, 37 FR 10880	
Subchapter 2, ''Control and Prohibition of Open Burning''	June 8, 1981	Sept. 30, 1981, 46 FR 47779	
Subchapter 3, ''Control and Prohibition of Smoke from Combustion of Fuel.	Oct. 12, 1977	Jan. 27, 1984, 49 FR 3465	
Subchapter 4, ''Control and Prohibition of Particles from Combustion of Fuel.	Oct. 12, 1977	.....do	
Subchapter 5, ''Prohibition of Air Pollution	Oct. 12, 1977	.....do	
Subchapter 6, ''Control and Prohibition of Particles From Manufacturing Processes'' (except section 6.5).	May 23, 1977	Jan. 26, 1979, 44 FR 5427	Section 6.5, ''Variances,'' is not approved (40 CFR 52.1570(c)(20) and 52.1604(a)). Any State-issued variances must be formally incorporated as SIP revisions if EPA is to be bound to their provisions (40 CFR 52.1604(a)).
Subchapter 7, ''Sulfur''	Mar. 1, 1967	May 31, 1972, 37 FR 10880	
Subchapter 8, ''Permits and Certificates, Hearings, and Confidentiality;''.	Apr. 5, 1985	Nov. 25, 1986, 51 FR 42573.	
Sections 8.1, 8.2, and 8.11	Mar. 2, 1992	Apr. 15, 1994, 59 FR 17935	
Subchapter 9, ''Sulfur in Fuels''	Feb. 4, 1983	July 8, 1983, 48 FR 31400	Sulfur dioxide ''bubble'' permits issued by the State pursuant to § 9.2 and not waived under the provisions of § 9.4 become applicable parts of the SIP only after receiving EPA approval as a SIP revision. ''Clean conversion incentive'' permits issued pursuant to § 9.5 must receive EPA approval as a SIP revision to become applicable parts of the SIP.
Subchapter 10, ''Sulfur in Solid Fuels''	July 14, 1981	Nov. 3, 1981, 46 FR 54542	Notification of ''large zone 3 coal conversions'' must be provided to EPA (40 CFR 52.1601(b)).
Subchapter 11, ''Incinerators''	Aug. 15, 1968	May 31, 1972, 37 FR 10880	
Subchapter 12, ''Prevention and Control of Air Pollution Emergencies''.	Mar. 27, 1972	.....do	
Subchapter 13, ''Ambient Air Quality Standards''	June 25, 1985	Nov. 25, 1986, 51 FR 42573.	
Subchapter 14, ''Control and Prohibition of Air Pollution From Diesel-Powered Motor Vehicles.''	July 1, 1985	June 13, 1986	
Subchapter 15, ''Control and Prohibition of Air Pollution From Light-Duty Gasoline-Fueled Motor Vehicles''.	Jan. 21, 1985	Sept. 17, 1992, 57 FR 42893	Variances adopted by the State pursuant to § 15.8 become applicable only if approved by EPA as SIP revisions.
Subchapter 16, ''Control and Prohibition of Air Pollution by Volatile Organic Compounds''.	Mar. 2, 1992	Apr. 15, 1994, 59 FR 17935	Earlier versions of Subchapter 16 remain part of the SIP only to the extent of determining compliance dates which have since passed.
Subchapter 17, ''Control and Prohibition of Air Pollution by Toxic Substances;''.	Mar. 2, 1992	Apr. 15, 1994, 59 FR 17935	Subchapter 17 is included in the SIP only as it relates to the control of perchloroethylene.

Subchapter 18, ''Control and Prohibition of Air Pollution from New or Altered Sources Affecting Ambient Air Quality in Nonattainment Areas (Emission Offset Rule)'' (except as noted regarding sections 18.1 and 18.2(e)(1)).	Sept. 8, 1980	Apr. 15, 1981, 46 FR 21996	The definitions of ''significant emission increase,'' in §§18.1, and 18.2(e)(1) are disapproved. Federally promulgated regulations (40 CFR 52.1578(c), published at 46 FR 21996 on Apr. 15, 1981) are applicable.
Subchapter 18, ''Control and Prohibition of Air Pollution from New or Altered Sources Affecting Ambient Air Quality (Emission Offset Rule)''.	Mar. 11, 1985	Nov. 25, 1986, 51 FR 42573.	The approval of this version of Subchapter 18 only relates to the review of major sources of lead and the review of significant increases of lead emissions at major sources.
Subchapter 21, ''Emission Statements;''	Mar. 15, 1993	Aug. 4, 1994, 59 FR 39689.	
Subchapter 23, ''Prevention of Air Pollution by Architectural Coatings and Consumer Products;''.	Mar. 2, 1992	Apr. 15, 1994, 59 FR 17935	
Subchapter 25, ''Control and Prohibition of Air, Pollution by Vehicular Fuels;''.	Oct. 5, 1992.	Feb. 12, 1996, 61 FR 5302	Approves 1992 revision of Subchapter 25 except that (1) oxygenated gasoline provisions are approved only as they apply to the four month control period from November 1 through the last day in February, consistent with the February 21, 1995 NJDEP modification of N.J.A.C. 7:27–25; and (2) oxygenated gasoline provisions are approved only as they apply to the Northern New Jersey portion of the New York-Northern New Jersey-Long Island consolidated metropolitan statistical area.
Title 7, Chapter 27B			
Subchapter 3, ''Air Test Method 3: Sampling and Analytic Procedures for the Determination of Volatile Organic Compounds from Source Operations''.	Mar. 2, 1992	Apr. 15, 1994, 59 FR 17935	
Subchapter 4, ''Air Test Method 4, Testing Procedures for Motor Vehicles.''	July 1, 1985	June 13, 1986	Only Sections 1, 2, 3 and 4 of Subchapter 4 are approved.
Title 13, Chapter 20:			
Subchapter 28, ''Enforcement Service Inspection of New Passenger Vehicles and New Motorcyles''.	Jan. 21, 1985	September 17, 1992. 57 FR 42893	
Title 16, Chapter 53			
''Autobus Specifications''	Sept. 26, 1983	June 13, 1986	Only Sections 3.23, 3.24, 3.27, 6.15, 6.21, 6.30, 7.14, 7.17, 7.23, 8.15, 8.22, 8.25 are approved.

[46 FR 57677, Nov. 25, 1981, and 46 FR 61266, Dec. 16, 1981, as amended at 48 FR 31400, July 8, 1983; 48 FR 51480, Nov. 9, 1983; 49 FR 3465, Jan. 27, 1984; 51 FR 21549, June 13, 1986; 51 FR 23418, June 27, 1986; 51 FR 42573, Nov. 25, 1986; 54 FR 25582, June 16, 1989; 55 FR 26689, June 29, 1990; 56 FR 50518, Oct. 7, 1991; 57 FR 42893, Sept. 17, 1992; 57 FR 53441, Nov. 10, 1992; 58 FR 29977, May 25, 1993; 59 FR 17935, Apr. 15, 1994; 59 FR 39689, Aug. 4, 1994; 60 FR 32276, June 21, 1995; 61 FR 5302, Feb. 12, 1996]

§ 52.1606 Visibility protection.

(a) The requirements of section 169A of the Clean Air Act are not met because the plan does not include approvable procedures meeting the requirements of 40 CFR 51.305 and 51.307 for protection of visibility in mandatory Class I Federal areas.

(b) Regulations for visibility monitoring and new source review. The provisions of §§ 52.26 and 52.28 are hereby incorporated and made part of the applicable plan for the State of New Jersey.

(c) *Long-term strategy*. The provisions of § 52.29 are hereby incorporated and made part of the applicable plan for the State of New Jersey.

[51 FR 23759, July 1, 1986, as amended at 52 FR 45137, Nov. 24, 1987]

§ 52.1607 Small business technical and environmental compliance assistance program.

On January 11, 1993, the New Jersey Department of Environmental Protection and Energy submitted a plan for the establishment and implementation of a Small Business Stationary Source Technical and Environmental Compliance Assistance Program for incorporation in the New Jersey state implementation plan. This plan satisfies the requirements of section 507 of the Clean Air Act, and New Jersey must implement the program as approved by EPA.

[59 FR 34386, July 5, 1994]

Subpart GG—New Mexico

§ 52.1620 Identification of plan.

(a) Title of plan: ''State of New Mexico Implementation Plan.''

(b) The plan was officially submitted on January 27, 1972.

(c) The Plan revisions listed below are submitted on the dates specified.

(1) The Environmental Improvement Agency submitted revisions of Air Quality Control Regulations 506, 507, 604, 605, 606, 651, and 652 (adopted by the Board on January 10, 1972) on March 7, 1972.

(2) Additions of sections 12–14–1 through 12–14–13 of the State's Air Quality Control Act, and Regulations 504, 602, and 603 were submitted by the Governor on May 9, 1972.

(3) Revisions of Regulations 702, 703, 704, and 705, as adopted by the Board on July 29, 1972, and revisions of Sections IV, V, VII, and VIII, were submitted by the Environmental Improvement Agency on July 31, 1972.

(4) State Attorney General's opinion on legal authority and confidentiality of source data was submitted on September 4, 1972. (Non-regulatory)

(5) Revisions of the New Source Review and Source Surveillance sections of the New Mexico Implementation Plan were submitted by the Environmental Improvement Agency on January 3, 1973. (Non-regulatory)

(6) Clarification of the State permit and source surveillance regulations was submitted by the Environmental Improvement Agency on January 18, 1973. (Non-regulatory)

(7) Regulation 705, Compliance Schedules, was submitted by the Governor on February 12, 1974.

(8) Revisions to Regulation 602, Coal Burning Equipment-Sulfur Dioxide, as adopted by the New Mexico Environmental Improvement Board on December 13, 1974, were submitted by the Governor on October 3, 1975 (see § 52.1624).

(9) Revisions to Regulation 100, Definitions, Regulation 705, Schedules of Compliance, and a new Regulation 706, Air Quality Maintenance Areas, were submitted by the Governor on November 6, 1975 (see § 52.1633).

(10) Revisions to sections 12–14–2, 12–14–6, and 12–14–7 of the New Mexico Air Quality Control Act were submitted by the Governor on November 6, 1975.

(11) Revisions to the plan for attainment of standards for particulate matter in Albuquerque and Grant, Eddy and Lea Counties, sulfur dioxide in San Juan and Grant Counties; ozone in Albuquerque and carbon monoxide in Las Cruces, Farmington and Santa Fe were submitted by the Governor on January 23, 1979.

(12) Ordinance for motor vehicle emissions inspection/maintenance program for Albuquerque submitted by the Governor July 2, 1979.

(13) Commitments regarding the development of a TSP plan for Albuquerque, modifications to the permit regulations and commitments regarding

reasonable further progress and commitments to currently planned transportation control measures for Albuquerque were submitted by the Governor on August 2, 1979.

(14) Schedule for Albuquerque TSP plan, request for 18 month extension for submission of a plan for attainment of the TSP standard in Grant County, schedule for revising permit regulations were submitted by the Governor on September 25, 1979.

(15) No action is being taken on the carbon monoxide strategies submitted by the Governor on January 23, 1979 for Farmington and Santa Fe.

(16) Compliance schedules for several industries located in Eddy, Lea and Grant Counties were submitted to EPA by the Governor of New Mexico on July 25, 1979.

(17) Revisions to the plan for attainment of the standard for carbon monoxide in Bernalillo County were submitted by the Governor on March 17, 1980.

(18) A commitment to not issue permits to stationary sources located in nonattainment areas was submitted by the Governor on May 20, 1980.

(19) A commitment to submit an enforcement plan for the Albuquerque-Bernalillo County inspection/maintenance program was submitted by the Governor on October 10, 1980.

(20) On December 12, 1979, the Governor submitted final revisions to the ambient monitoring portion of plan.

(21) A variance to Regulation 506 for Phelps Dodge Corporation, Hidalgo Smelter in Playas, New Mexico was submitted by the Governor on February 4, 1980.

(22) Revisions to Regulation 602, Coal Burning Equipment-Sulfur Dioxide and a compliance schedule for that regulation were adopted on November 20, 1980 by the New Mexico Environmental Improvement Board and submitted by the Governor on November 24, 1980. A revised sulfur dioxide control strategy demonstration for San Juan County, based on revised Regulation 602 was submitted by the New Mexico Environmental Improvement Division on February 12, 1981. Clarifications of provisions in revised regulation 602, and a memorandum of understanding between the State and Arizona Public Service Company on the procedure to be used by EPA in enforcing power plant station emission limits were submitted by the New Mexico Environmental Improvement Division on April 16, 1981.

(23) A revision to Regulation 504 which extends the final compliance date for Units 4 and 5 of the Arizona Public Service Four Corners Power Plant to December 31, 1982 was submitted by the Governor on June 28, 1978. A compliance schedule for the same units was submitted by the Governor on March 31, 1980.

(24) A revision to Regulation 507, changing the emission limitations was submitted by the Governor on January 23, 1979.

(25) A variance to Regulation 603 for the Arizona Public Service Units 3, 4, and 5 at the Four Corners Generating Station, was submitted by the Governor on July 31, 1980.

(26) Revision to the plan for maintenance of pay for sources subject to nonferrous smelter orders (Section 74–2–11.1B of the New Mexico Air Quality Control Act) was submitted by the Governor on September 26, 1979.

(27) The New Mexico Plan for lead was submitted to EPA on May 19, 1980, by the Governor of New Mexico as adopted by the New Mexico Improvement Board on May 9, 1980. A clarifying letter dated February 10, 1982 also was submitted.

(28) Revisions to Regulation 652, Non-Ferrous Smelters—Sulfur, submitted by the Governor on June 22, 1981. A revised sulfur dioxide control strategy demonstration for Grant County based on the revised Regulation 652 was submitted by the New Mexico Environmental Improvement Division on May 12, 1981 and August 13, 1981.

(29) A revision to Regulation 401, Regulation to Control Smoke and Visible Emissions, was adopted by the Environmental Improvement Board on August 25, 1978 and submitted by the Governor on November 8, 1978.

(30) Revision to New Mexico Regulation 801, Excess Emissions during Malfunction, Startup, Shutdown or Scheduled Maintenance, was submitted by the Governor on May 16, 1981.

(31) Revisions to Section X, Intergovernmental Consultation and Cooperation and Interstate Pollution Abatement, submitted by the Governor on January 23, 1979, the Intergovernmental Consultation Program submitted by the Environmental Improvement Division, March 28, 1980 and copies of letters from the New Mexico Environmental Improvement Division dated November 7, 1977 to the States of Texas, Oklahoma, Arizona, Colorado, and Utah sent in compliance with section 126(a)(2) of the Clean Air Act, as amended in 1977.

(32) Revisions to Air Quality Control Regulation 652, Nonferrous Smelters—Sulfur were adopted by the New Mexico Environmental Improvement Board on June 11, 1982 and submitted to EPA by the Governor of New Mexico on July 26, 1982.

(33) Addition of Public Information and Participation Program, submitted by the Environmental Improvement Division on December 20, 1979.

(34) Revisions to the plan for attainment of the standard for Carbon Monoxide in Bernalillo County were submitted by the Governor on June 28, 1982, and January 26, 1983, which included the Albuquerque/Bernalillo County Air Quality Control Board Regulation Number 28, adopted October 19, 1982. On March 4, 1985, the vehicle inspection and maintenance portion of the SIP providing for attainment of the standard for Carbon Monoxide in Bernalillo County was disapproved.

(35) Revisions to sections 74–2–2 (9/79, 2/82, 4/83); 74–2–5 (9/79, 2/82, 4/83); 74–2–6 (2/82); 74–2–7 (9/79, 2/82, 4/83); 74–2–9 (9/79); 74–2–11 (9/79); 74–2–11.1 (9/79); 74–2–15 (9/79); and 74–2–15.1 (9/79) of the State's Air Quality Control Act were submitted by the New Mexico Secretary for Health and Environment on August 11, 1983.

(36) A revision to Air Quality Control Regulation 402 ''Regulation to Control Wood Waste Burners'' as adopted by the New Mexico Environmental Improvement Board on January 10, 1975, and revised by that Board on December 10, 1982, was submitted by the State on December 23, 1983.

(37) On February 21, 1984, the Governor of New Mexico submitted Air Quality Control Regulation 707—Permits, Prevention of Significant Deterioration (PSD), as adopted by the New Mexico Environmental Improvement Board on January 13, 1984. Regulation 707 provides authority for the State to implement the PSD program in certain areas of the State. On May 14, 1985, the Governor of New Mexico submitted a letter in which he committed the State not to issue PSD permits under Regulation 707 to sources which would require review under EPA's stack height regulations because they would have stack heights over sixty five (65) meters or would use any other dispersion techniques, as defined at 40 CFR 51.1(hh).

(i) Incorporation by reference.

(A) Letter from the Governor of New Mexico dated February 21, 1984 to EPA, and New Mexico Air Quality Control Regulation No. 707—Permits, Prevention of Significant Deterioration of Air Quality, except for sources that locate (or are located) on lands under control of Indian Governing Bodies, or sources that locate (or are located) in Bernalillo County, or sources that require review under EPA's stack height regulations because they have stack heights over sixty five (65) meters or use any other dispersion techniques, as defined at 40 CFR 51.1(hh), adopted on January 13, 1984.

(B) A letter from the Governor of New Mexico dated May 14, 1985, in which he committed the State not to issue PSD permits under Regulation 707 to source which would require review under EPA's stack height regulations because they would have stack heights over sixty five (65) meters or would use any other dispersion techniques, as defined at 40 CFR 51.1(hh).

(ii) Additional material.

(A) A narrative explantion entitled ''Revision to the New Mexico State Implementation Plan—Prevention of Significant Deterioration of Air Quality.''

(38) Revisions to the New Mexico SIP for the Arizona Public Service Units 3, 4 and 5 at the Four Corners Generating Station were submitted by the Governor on February 4, 1987, October 26, 1987, and February 16, 1988.

(i) Incorporation by reference.

(A) An Order dated and effective August 7, 1986, issued by the Chairman of

the New Mexico Environmental Improvement Board in the matter of Arizona Public Service Company, Fruitland, New Mexico for Units 3, 4 and 5 of the Four Corners Power Plant granting a variance through May 31, 1987, from Air Quality Control Regulation 603.B.

(B) A Memorandum and Order dated and effective April 10, 1987, issued by the Chairman of the New Mexico Environmental Improvement Board in the matter of Arizona Public Service Company, Fruitland, New Mexico for Units 3, 4 and 5 of the Four Corners Power Plant extending the term of the variance from May 31, 1987 through October 15, 1987.

(C) An Order dated and effective December 18, 1987, issued by the Chairman of the New Mexico Environmental Improvement board in the matter of Arizona Public Service Company, Fruitland, New Mexico for Units 3, 4 and 5 of the Four Corners Power Plant extending the term of the variance through September 30, 1989 for Unit 4, September 30, 1990 for Unit 3, and September 30, 1991 for Unit 5.

(ii) Additional material. (A) Modeling Protocol, The Four Corners Power Plant, prepared by Bruce Nicholson of the New Mexico Environmental Improvement Division, November 6, 1987.

(B) Amendment to Modeling Protocol, letter of August 17, 1988, from Bruce Nicholson of the New Mexico Environmental Improvement Division to Gerald Fontenot of EPA Region 6.

(C) Modeling Report, letter of October 27, 1988 to C. V. Mathai (Arizona Public Service Company) and Bruce Nicholson (New Mexico Environmental Improvement Division) from Mark Yocke of Systems Applications Inc.

(D) An air quality impact analysis dated November 16, 1988, submitted by the Governor of New Mexico which demonstrated that the variance would not interfere with attainment or maintenance of the NO_2 NAAQS.

(39) On April 26, 1988, the Governor of New Mexico submitted a revision to the State Implementation Plan that contained Air Quality Control Regulation No. 710—Stack Height Requirements, as adopted by the New Mexico Environmental Improvement Board on March 10, 1988. Regulation No. 710 enables the State to ensure that the degree of emission limitation required for the control of any air pollutant under its SIP is not affected by that portion of any stack height that exceeds GEP or by any other dispersion technique.

(i) Incorporation by reference.

(A) New Mexico Air Quality Control Regulation No. 710—Stack Height Requirements, effective April 14, 1988.

(ii) Other material—None.

(40) On November 5, 1985, the Governor of New Mexico submitted Air Quality Control Regulation 709, Permits-Nonattainment Areas, as adopted by the New Mexico Environmental Improvement Board on July 26, 1985, and effective on August 25, 1985. On August 19, 1988, the Governor of New Mexico submitted revisions to Air Quality Control Regulation 709, Permits—Nonattainment Areas, as adopted by the New Mexico Environmental Improvement Board on July 8, 1988, and effective on August 31, 1988. These revisions were to Section G.3, H.4.(d), J.1.(b)(iv), and L.32. Regulation 709 establishes a program under which new major source and major modifications may be constructed in areas where a National Ambient Air Quality Standard (NAAQS) is being exceeded, without interfering with the continuing progress toward attainment of that standard. This regulation is part of New Mexico's New Source Review (NSR) program.

(i) Incorporation by reference.

(A) Incorporation of New Mexico Air Quality Control Regulation 709; adopted on July 26, 1985, effective August 25, 1985 and Revisions G.3; H.4.(d); J.1.(b)(iv); and L.32 adopted on July 8, 1988, effective August 31, 1988.

(ii) Additional material.

(A) Letter dated September 29, 1988, from the New Mexico Air Quality Bureau Chief making commitments requested by EPA in the August 31, 1988, FEDERAL REGISTER Proposed Rulemaking (51 FR 33505).

(41) Revisions to the New Mexico State Implementation Plan for particulate matter (PM_{10} Group III): (1) Air Quality Control Regulation (AQCR) 100—Definitions Sections P, Q, R, S, BB; (2) AQCR 707—Permits, Prevention of Significant Deterioration (PSD) Sections C, E(8), I(4), I(9)(a), J, P(19) through P(29), P(34), P(40), Table 2, and Table 3; and (3) AQCR 709—Permits,

Nonattainment Areas sections A(1)(b), A(5), and Table 1 as adopted by the New Mexico Environmental Improvement Board (NMEIB) on July 8, 1988, and filed with State Records Center on August 1, 1988; and (4) Air Pollution Episode Contingency Plan for New Mexico, as adopted by the NMEID on July 7, 1988, were submitted by the Governor on August 19, 1988. Approval of the PM10 Group III SIP is partially based on previous approved AQCRs 100, 301, 401, 402, 501, 502, 506, 507, 508, 509, 510, 511, 601, 702, 707, and 709.

(i) Incorporation by reference.

(A) AQCR 100—Definitions Section P, Q, R, S, and BB as filed with State Records Center on August 1, 1988.

(B) AQCR 707—Permits, Prevention of Significant Deterioration (PSD) Sections C, E(8), I(4), I(9)(a), J, P(19) through P(29), P(34), P(40), Table 2, and Table 3, as filed with State Records Center on August 1, 1988.

(C) AQCR 709—Permits, Nonattainment Areas Sections A(1)(b), A(5), and Table 1 as filed with State Records Center on August 1, 1988.

(ii) Additional Material.

(A) A letter dated May 25, 1988, from the NMEID General Counsel to EPA's Region 6 Air Programs Chief indicating that the State of New Mexico has sufficient authority to enforce the NAAQS without adopting the Federal NAAQS as State standards.

(42) [Reserved]

(43) A revision to the New Mexico State Implementation Plan (SIP) to include Air Quality Control Regulation 700—Filing and Permit Fees, as filed with the State Records and Archives Center on November 20, 1989, and submitted by the Governor of New Mexico on May 14, 1990.

(i) Incorporation by reference.

(A) New Mexico Air Quality Control Regulation 700—Filing and Permit Fees, as filed with the State Records and Archives Center on November 20, 1989.

(44) A revision to the New Mexico State Implementation Plan (SIP) to include: Air Quality Control Regulation 110—Confidential Information Protection, and Air Quality Control Regulation 703.1—Notice of Intent and Emissions Inventory Requirements, and revisions to Air Quality Control Regulations 100—Definitions and 709—Permits—Nonattainment Areas, as all filed with the State Records and Archives Center on May 29, 1990, and submitted by the Governor of New Mexico on July 16, 1990; and revisions to Air Quality Control Regulation 702—Permits, as filed with the State Records and Archives Center on August 18, 1987, on October 19, 1988, and on May 29, 1990. Air Quality Control Regulation 702 was first submitted by the Governor of New Mexico to EPA on September 17, 1987. Further revisions to Air Quality Control Regulation 702 were submitted to EPA on October 28, 1988, and on July 16, 1990. The approval of Air Quality Control Regulation 703.1 allows Air Quality Control Regulation 703 to be removed from the New Mexico State Implementation Plan.

(i) Incorporation by reference

(A) New Mexico Air Quality Control Regulation 110—Confidential Information Protection, as filed with the State Records and Archives Center on May 29, 1990.

(B) New Mexico Air Quality Control Regulation 703.1—Notice of Intent and Emissions Inventory Requirements, ''Part One—Definitions;'' ''Part Two—Notice of Intent;'' and ''Part Three—Emissions Inventory Requirements,'' as filed with the State Records and Archives Center on May 29, 1990.

(C) New Mexico Air Quality Control Regulation 100—Definitions, sections (B), (C), (D), (E), (F), (G), (H), (I), (J), (N), (O), (T), (U), (V), (W), (X), (Y), (Z), (AA), (CC), (DD), and (EE), as filed with the State Records and Archives Center on May 29, 1990.

(D) New Mexico Air Quality Control Regulation 702—Permits, ''Part One—Definitions,'' first paragraph and sections 1, 2, 3, 4, 5; ''Part Two—Permit Processing and Requirements,'' section A, subsections A(4), A(6); section G, ''Public Notice and Participation,'' subsections G(1) (first paragraph), G(1)(e); section H, ''Permit Decisions and Appeals,'' subsections H(1), H(2), H(3), H(5), H(6), H(7); Section I, ''Basis for Denial of Permit,'' subsections I(1), I(3); Section J, ''Additional Legal Responsibilities on Applicants;'' section K, ''Permit Conditions,'' subsections

K(1), K(2), K(3), K(4); section L, ''Permit Cancellations;'' section M, ''Permittee's Notification Requirements to Division,'' subsections M (first paragraph), M(1); Section O, ''Source Class Exemption Process (Permit Streamlining),'' subsections O(1)(a), O(2); and section P, ''Emergency Permit Process,'' subsections P(2), P(3), P(4), as filed with the State Records and Archives Center on August 18, 1987; and further revisions to Air Quality Control Regulation 702, ''Part One—Definitions,'' sections 6, 7, 8, 9, 10, 11; ''Part Two—Permit Processing and Requirements,'' section A, subsection A(1)(b); section H, ''Permit Decisions and Appeals,'' subsection H(4); and section I, ''Basis for Denial of Permit,'' subsection I (first paragraph), as filed with the State Records and Archives Center on October 19, 1988; and further revisions to Air Quality Control Regulation 702, ''Part One—Definitions,'' Sections 12, 13, 14, 15, 16, 17, 18, 19, 20, 21, 22, 23, 24, 25, 26, 27, 28, 29, 30, 31, 32, 33; ''Part Two—Permit Processing and Requirements,'' section A, ''Application for Construction, Modification, NSPS, and NESHAP—Permits and Revisions,'' Subsections A(1)(a)(i), A(1)(a)(ii), A(1)(a)(iii), A(1)(a)(v), A(2), A(3), A(5), A(7); Section B, ''New Source Review Coordination;'' section C, ''Permit Revision;'' section D, ''Contents of Applications (except last sentence of section D, subsection D(1)(d));'' section E, ''Confidential Information Protection;'' section F, ''Construction, Modification and Permit Revision in Bernalillo County;'' section G, ''Public Notice and Participation,'' subsections G(1)(a), G(1)(b), G(1)(c), G(1)(d), G(1)(f), G(2); section I, ''Basis for Denial of Permit,'' subsections I(2), I(4), I(5), I(6), I(7); section K, ''Permit Conditions,'' subsection K(5); section M, ''Permittee's Notification Requirements to Division,'' Subsections M(2), M(3), M(4); section N, ''Startup and Followup Testing;'' Section O, ''Source Class Exemption Process (Permit Streamlining),'' subsections O(1) (first paragraph), O(1)(b), O(1)(c), O(3), O(4); section P, ''Emergency Permit Process,'' subsections P(1), P(5); section Q, ''Nonattainment Area Requirements;'' and Table 1, ''Significant Ambient Concentrations,'' as filed with the State Records and Archives Center on May 29, 1990.

(E) New Mexico Air Quality Control Regulation 709—Permits—Nonattainment Areas, section A, ''Applicability,'' subsections A(1), A(3), A(4); section B, ''Source Obligation,'' subsections B(3), B(5), B(6); section C, ''Source Information,'' subsections C (first paragraph), C(1), C(2); section D, ''Source Requirements,'' subsections D(1), D(2), D(3), D(4), D(5); section E, ''Additional Requirements for Sources Impacting Mandatory Federal Class I Areas,'' subsections E(1), E(2), E(5); section H, ''Banking of Emission Reduction,'' subsection H(4)(a); section I, ''Air Quality Benefit,'' subsections I(1), I(2); section J, ''Public Participation and Notification;'' section K, ''Definitions;'' and Table 2, ''Fugitive Emissions Source Categories,'' Title only, as filed with the State Records and Archives Center on May 29, 1990.

(45) On July 11, 1986, the Governor of New Mexico submitted a revision to the State Implementation Plan that contained Albuquerque/Bernalillo County Air Quality Control Regulation (AQCR) No. 33—Stack Height Requirements, as filed with the State Records and Archives Center on June 18, 1986. Further, on April 14, 1989, the Governor submitted revisions to AQCR 33, as filed with the State Records and Archives Center on March 16, 1989. In addition, on August 7, 1989, the Governor submitted a commitment found in the July 12, 1989 Supplement to AQCR 33 to include specific caveat language on all affected permits issued in which dispersion credits have been an issue in the permit. AQCR 33 enables Albuquerque/Bernalillo County to ensure that the degree of emission limitation required for the control of any air pollutant under its SIP is not affected by that portion of any stack height that exceeds GEP or by any other dispersion technique.

(i) Incorporation by reference.

(A) Albuquerque/Bernalillo County Air Quality Control Regulation 33—Stack Height Requirements, as filed with the State Records and Archives Center on June 18, 1986, and as revised on March 16, 1989.

(ii) Additional material.

(A) The Supplement to the State of New Mexico's SIP regarding stack heights in new source review (NSR) for permits issued in Bernalillo County, as adopted by the Albuquerque/Bernalillo County Air Quality Control Board on July 12, 1989. The Board in this Supplement committed to include specific caveat language for all affected permits issued in which dispersion credits have been an issue in the permit.

(46) Revisions to the New Mexico State Implementation Plan for Air Quality Control Regulation (AQCR) 707—Permits, Prevention of Significant Deterioration (PSD) (for PSD nitrogen dioxide increments) Sections O(4), P(7) through P(41), Table 4, and Table 5, as adopted by the New Mexico Environmental Improvement Board (NMEIB) on March 9, 1990, and filed with State Records Center on May 29, 1990, were submitted by the Governor on July 16, 1990.

(i) Incorporation by reference.

(A) AQCR 707—Permits, Prevention of Significant Deterioration (PSD) sections O(4), P(7) through P(41), Table 4, and Table 5, as filed with State Records Center on May 29, 1990.

(ii) Additional Material—None.

(47) A revision to the New Mexico State Implementation Plan (SIP) to include Part Four of Air Quality Control Regulation 702, entitled ''Source Class Permit Streamlining,'' as filed with the State Records and Archives Center on May 12, 1992, and submitted by the Governor of New Mexico by letter dated June 16, 1992.

(i) *Incorporation by reference.*

(A) New Mexico Air Quality Control Regulation 702—*Permits,* ''Part Four—Source Class Permit Streamlining,'' Section A, ''Definitions;'' Section B, ''Applicability;'' Section C, ''Contents of Application;'' Section D, ''Public Notice and Participation;'' Section E, ''Permit Decisions;'' Section F, ''General Requirements;'' Section G, ''Source Class Requirements;'' and Table 2, ''Permit Streamlining Source Class Categories,'' as filed with the State Records and Archives Center on May 12, 1992.

(48) A revision to the New Mexico SIP to include revisions to Air Quality Control Regulation 709—*Permits—Nonattainment Areas,* as filed with the State Records and Archives Center on June 25, 1992.

(i) Incorporation by reference.

(A) Revisions to New Mexico Air Quality Control Regulation 709—*Permits—Nonattainment Areas,* Section D, ''Source Requirements,'' Subsections D(2), D(3)(a), D(5), D(6); Section G, ''Emission Offsets,'' Subsection G(5); Section I, ''Air Quality Benefit,'' Subsection I(1); and Section J, ''Public Participation and Notification,'' Subsection J(2) (first paragraph), as filed with the State Records and Archives Center on June 25, 1992.

(49) A revision to the New Mexico State Implementation Plan (SIP) to include revisions to Albuquerque/Bernalillo County Air Quality Control Board Regulation 8—*Airborne Particulate Matter,* as filed with the State Records and Archives Center on February 17, 1983, and submitted by the Governor of New Mexico by letter dated June 16, 1992.

(i) *Incorporation by reference.*

(A) Albuquerque/Bernalillo County Air Quality Control Board Regulation 8—*Airborne Particulate Matter,* Section 8.03, ''Soil Disturbance,'' Subsections 8.03.1, 8.03.2, 8.03.3, 8.03.4, 8.03.5, 8.03.6, 8.03.7, and 8.03.8, as filed with the State Records and Archives Center on February 17, 1983.

(50) A revision to the New Mexico State Implementation Plan (SIP) addressing moderate PM–10 nonattainment area requirements for Anthony was submitted by the Governor of New Mexico by letter dated November 8, 1991. The SIP revision included, as per section 188(f) of the Clean Air Act, a request for a waiver of the attainment date for Anthony.

(i) Incorporation by reference.

(A) Revision to New Mexico Air Quality Control Regulation 301—Regulation to Control Open Burning, section I (definition of ''open burning''), as filed with the State Records and Archives Center on February 7, 1983.

(ii) Additional material.

(A) November 8, 1991, narrative plan addressing the Anthony moderate PM–10 nonattainment area, including emission inventory, modeling analyses, and control measures.

(B) A letter dated October 29, 1991, from Judith M. Price, Dona Ana County Planning Director and Assistant County Manager, to Judith M. Espinosa, Secretary of the New Mexico Environment Department, in which the County committed to implement and enforce all Dona Ana County rules, regulations, policies and practices, including those identified in the draft PM–10 SIP which reduce airborne dust in the Anthony area. The Dona Ana County rules, regulations, policies and practices identified in the draft Anthony PM–10 SIP are identical to those identified in the final Anthony PM–10 SIP.

(C) A letter dated November 21, 1991, from Cecilia Williams, Chief, New Mexico Air Quality Bureau, to Gerald Fontenot, Chief, Air Programs Branch, EPA Region 6, expressing satisfaction with the October 29, 1991, commitment letter from Judith Price to Judith Espinosa.

(D) Anthony PM–10 SIP narrative from page 10 that reads as follows: ''The State remains committed to the dust control measures implemented by Dona Ana County, moderate area control strategies as agreed to in this SIP submittal and to the established air quality monitoring schedule.''

(51) A revision to the New Mexico SIP addressing the nonattainment new source review program for Albuquerque/Bernalillo County, outside the boundaries of Indian lands, was submitted by the Governor of New Mexico on April 14, 1989, August 7, 1989, and May 17, 1993. The revision included visibility protection new source review and stack height provisions.

(i) Incorporation by reference.

(A) Albuquerque/Bernalillo County Air Quality Control Regulation 32—Construction Permits—Nonattainment Areas, Section A, ''Applicability,'' Subsection A(2); Section B, ''Source Obligation,'' Subsections B(1), B(2), B(4); Section C, ''Source Information,'' Subsection C(3); Section G, ''Emission Offsets,'' Subsections G(first paragraph), G(1), G(2), G(4), G(6), G(7), G(8), G(9)(first paragraph), G(9)(a), G(9)(b), G(10); Section J, ''Public Participation and Notification,'' Subsections J(1), J(2)(a), J(2)(d), J(2)(f), J(2)(g), J(2)(h); Section K, ''Definitions,'' Subsections K(first paragraph), K(1), K(2), K(4), K(5), K(6), K(8), K(9), K(10), K(11), K(12), K(13), K(15), K(16)(first paragraph), K(16)(b), K(16)(c)(first paragraph), K(16)(c)(i), K(16)(c)(ii), K(16)(c)(iii), K(16)(c)(iv), K(16)(c)(v)(first paragraph), K(16)(c)(v)(a), K(16)(c)(vi), K(16)(c)(vii), K(16)(d), K(16)(e), K(17)(first paragraph), K(17)(a), K(17)(b), K(17)(c), K(18), K(19), K(20), K(21)(first paragraph), K(21)(a), K(21)(b)(first paragraph), K(21)(b)(i), K(21)(c), K(21)(d), K(21)(e), K(21)(f), K(23), K(26), K(28), K(29), K(31), K(32); and Table 1, ''Significant Ambient Concentrations,'' as filed with the State Records and Archives Center on March 16, 1989; and further revisions to AQCR 32, Section i, ''Purpose;'' Section A, ''Applicability,'' Subsections A(1), A(3), A(4); Section B, ''Source Obligation,'' Subsections B(3), B(5), B(6); Section C, ''Source Information,'' Subsections C(first paragraph), C(1), C(2); Section D, ''Source Requirements;'' Section E, ''Additional Requirements for Sources;'' Section F, ''Emissions Offset Baseline;'' Section G, ''Emission Offsets,'' Subsections G(3), G(5), G(9)(c); Section H, ''Banking of Emission Reduction;'' Section I, ''Air Quality Benefit;'' Section J, ''Public Participation and Notification,'' Subsections J(2)(first paragraph), J(2)(b), J(2)(c), J(2)(e); Section K, ''Definitions,'' Subsections K(3), K(7), K(14), K(16)(a), K(16)(c)(v)(b), K(17)(d), K(17)(e), K(21)(b)(ii), K(22), K(24), K(25), K(27), K(30); and Table 2, ''Fugitive Emissions Source Categories,'' as filed with the State Records and Archives Center on February 26, 1993.

(ii) Additional material.

(A) The Supplement to the New Mexico State Implementation Plan to Control Air Pollution in Areas of Bernalillo County Designated Nonattainment, as approved by the Albuquerque/Bernalillo County Air Quality Control Board on April 14, 1993. This supplement superseded the supplement dated July 12, 1989.

(B) A letter dated July 18, 1989, from Sarah B. Kotchian, Director, Albuquerque Environmental Health Department, to Mr. Robert E. Layton Jr., Regional Administrator, EPA Region 6, regarding a stack height commitment and an NSPS/NESHAP performance testing commitment.

(52) A revision to the New Mexico SIP addressing CO for Albuquerque/Bernalillo County was submitted by the Governor of New Mexico by letter dated November 5, 1992.

(i) Incorporation by reference.

(A) Albuquerque/Bernalillo County Regulation 34–Woodburning, section 34.00, ''Purpose;'' section 34.01, ''Definitions;'' section 34.02, ''Sale of New Wood Heaters–Certification Required;'' section 34.03, ''No-burn Periods;'' section 34.04, ''Notice Required;'' Section 34.05, ''Exemptions;'' section 34.06, ''Visible Emissions;'' section 34.07, ''Test Procedures;'' and section 34.08, ''Misfueling of Solid Fuel Heating Devices Prohibited,'' as filed with the State Records and Archives Center on November 27, 1991.

(B) Albuquerque/Bernalillo County Regulation 35–Alternative Fuels, section 35.00, ''Purpose;'' section 35.01, ''Definitions;'' section 35.02, ''Oxygenated Fuels;'' section 35.03, ''Oxygenated Fuels Procedures Manual;'' and section 35.07, ''Severability Clause,'' as filed with the State Records and Archives Center on June 25, 1992.

(ii) Additional material.

(A) November 5, 1992, narrative plan addressing the Albuquerque/Bernalillo County CO nonattainment area, including the Albuquerque/Bernalillo County 1990 base year CO emissions inventory.

(B) A letter dated March 22, 1993, from Sarah B. Kotchian, Director, Albuquerque Environmental Health Department (Department), to A. Stanley Meiburg, Director, Air, Pesticides and Toxics Division, EPA Region 6, in which the Department committed to submitting future amendments to Regulation 34 to correct an enforceability deficiency, and in which the Department committed to using only EPA approved test methods until the future amendment correcting the enforceability deficiency is approved by the EPA.

(C) A memorandum dated September 8, 1992, from Kent A. Salazar, Manager, Albuquerque Vehicle Pollution Management Division, to Albert Salas, Quality Assurance Specialist Supervisor, Albuquerque Vehicle Pollution Management Division, addressing the suspension of the oxygenated fuels program due to oxygenate shortage.

(53) A revision to the New Mexico SIP addressing the prevention of significant deterioration program for Albuquerque/Bernalillo County, outside the boundaries of Indian lands, was submitted by the Governor of New Mexico on April 14, 1989, August 7, 1989, May 1, 1990, and May 17, 1993. The revision included NO_2 increment provisions and visibility protection NSR.

(i) Incorporation by reference.

(A) Albuquerque/Bernalillo County Air Quality Control Regulation (AQCR) 29—Prevention of Significant Deterioration, Section A, ''Applicability;'' Section B, ''Exemptions;'' Section C, ''Source Obligation;'' Section D, ''Source Information;'' Section E, ''Control Technology Requirements,'' Subsections E(1), E(2), E(4)(a), E(4)(b), E(4)(c), E(4)(d), E(4)(e), E(5), E(6), E(7), E(8); Section F, ''Ambient Impact Requirements,'' Subsections F(1), F(2); Section G, ''Additional Impact Requirements;'' Section H, ''Ambient Air Quality Modeling;'' Section I, ''Monitoring Requirements,'' Subsections I(1), I(2), I(3), I(4), I(5), I(7), I(8), I(9); Section J, ''Stack Height Credit;'' Section K, ''Temporary Source Exemptions;'' Section L, ''Public Participation and Notification;'' Section M, ''Restrictions on Area Classifications;'' Section N, ''Exclusions from Increment Consumption;'' Section O, ''Additional Requirements for Sources Impacting Federal Class I Areas,'' Subsections O(1), O(2), O(3), O(5), O(6), O(7); Section P, ''Definitions,'' Subsections P(first paragraph), P(1), P(2), P(3), P(4), P(5), P(6), P(26)(first paragraph), P(26)(a), P(26)(c), P(26)(d), P(27); and Table 3, ''Significant Monitoring Concentrations,'' as filed with the State Records and Archives Center on March 16, 1989; and further revisions to AQCR 29, Section O, ''Additional Requirements for Sources Impacting Federal Class I Areas,'' Subsection O(4); Section P, ''Definitions,'' Subsections P(8), P(9), P(10), P(12), P(13)(first paragraph), P(13)(a), P(14), P(15), P(16), P(17), P(18), P(19), P(20), P(21), P(22), P(23), P(24), P(25), P(26)(e), P(28), P(29), P(30), P(31), P(32), P(33), P(34), P(35), P(36), P(37), P(38), P(39), P(40), P(41); and Table 5, ''Maximum Allowable Increases for

Class I Waivers,'' as filed with the State Records and Archives Center on April 24, 1990; and further revisions to AQCR 29, Section E, ''Control Technology Requirements,'' Subsections E(3), E(4)(first paragraph); Section F, ''Ambient Impact Requirements,'' Subsection F(3); Section I, ''Monitoring Requirements,'' Subsection I(6); Section P, ''Definitions,'' Subsections P(7), P(11), P(13)(b), P(26)(b); Table 1, ''PSD Source Categories;'' Table 2, ''Significant Emission Rates;'' Table 4, ''Allowable PSD Increments;'' and Table 6, ''Maximum Allowable Increase for Sulfur Dioxide Waiver by Governor,'' as filed with the State Records and Archives Center on February 26, 1993.

(B) Albuquerque/Bernalillo County Air Quality Control Board Regulation 2—Definitions, Sections 2.31, 2.32, 2.33, 2.34, 2.35, 2.36, 2.37, 2.38, 2.39, 2.40, 2.41, 2.42, 2.43, 2.44, 2.45, 2.46, 2.47, 2.48, 2.49, 2.50, 2.51, and 2.52, as filed with the State Records and Archives Center on March 16, 1989.

(ii) Additional material.

(A) The Supplement to the New Mexico State Implementation Plan for Prevention of Significant Deterioration in Albuquerque/Bernalillo County, as approved by the Albuquerque/Bernalillo County Air Quality Control Board on April 11, 1990. This supplement superseded the supplement dated July 12, 1989.

(B) A letter dated April 20, 1992, from Sarah B. Kotchian, Director, Albuquerque Environmental Health Department, to A. Stanley Meiburg, Director, Air, Pesticides and Toxics Division, EPA Region 6, regarding a commitment to incorporate Clean Air Act Amendment revisions into the Albuquerque/Bernalillo County PSD program.

(54) A revision to the New Mexico SIP addressing the Albuquerque/Bernalillo County Permitting Program was submitted by the Governor of New Mexico by cover letter dated July 22, 1993.

(i) Incorporation by reference.

(A) Albuquerque/Bernalillo County Regulation Number 20–Authority-to-Construct Permits, Section 20.00, ''Purpose;'' Section 20.01, ''Applicability;'' Section 20.02, ''Fees for Permit Application Review;'' Section 20.03, ''Contents of Applications;'' Section 20.04, ''Public Notice and Participation;'' Section 20.05, ''Permit Decisions and Appeals;'' Section 20.06, ''Basis for Permit Denial;'' Section 20.07, ''Additional Legal Responsibilities on Applicants;'' Section 20.08, ''Permit Conditions;'' Section 20.09, ''Permit Cancellation;'' Section 20.10, ''Permittee's Notification Obligations to the Department;'' Section 20.11, ''Performance Testing Following Startup;'' Section 20.12, ''Emergency Permits;'' Section 20.13, ''Nonattainment Area Requirements;'' Section 20.14, ''Definitions Specific to Authority-to-Construct Permit Regulations;'' and Table One, ''Significant Ambient Concentrations,'' as filed with the State Records and Archives Center on February 26, 1993.

(ii) Additional material.

(A) The Supplement Pertaining to General New Source Review in Albuquerque/Bernalillo County, New Mexico, as approved by the Albuquerque/Bernalillo County Air Quality Control Board on May 12, 1993.

(55)–(56) [Reserved]

(57) A revision to the New Mexico SIP addressing CO contingency measures and a proposed clean fuel vehicle fleet demonstration project for Albuquerque/Bernalillo County, outside the boundaries of Indian lands, was submitted by the Governor of New Mexico by cover letter dated November 12, 1993.

(i) Incorporation by reference.

(A) Albuquerque/Bernalillo County Regulation Number 35–Alternative Fuels, Section 35.02, ''Oxygenated Fuels,'' Subsection 35.02(A)(1); Section 35.03, ''Oxygenated Fuels Procedures Manual;'' and Section 35.06, ''Contingency Measures,'' as filed with the State Records and Archives Center on November 10, 1993.

(ii) Additional material.

(A) November 12, 1993, narrative plan addressing the Albuquerque/Bernalillo County CO nonattainment area, including the proposed clean fuel vehicle fleet demonstration project.

(58) A revision to the New Mexico State Implementation Plan (SIP) to include revisions to AQCRs 602, 605, 651, and 652, submitted by the Governor by cover letter dated January 28, 1994. The revision to AQCR 605 consists of removing AQCR 605 from theNew Mexico SIP.

(i) Incorporation by reference.

(A) Revisions to New Mexico Air Quality Control Regulation 602–*Coal Burning Equipment–Sulfur Dioxide*, Section A.1, Section A.2, Section A.3, Section B.1, Section C.1, Section E.2.a, Section E.2.d, Section F.1.b, Section F.7 and Section G, as filed with the State Records and Archives Center on November 17, 1993.

(B) Revisions to New Mexico Air Quality Control Regulation 651–*Sulfuric Acid Production Units–Sulfur Dioxide, Acid Mist and Visible Emissions*, Section A, Section B, Section C, Section D, Section E, Section F, Section G and Section H, as filed with the State Records and Archives Center on November 17, 1993.

(C) Revisions to New Mexico Air Quality Control Regulation 652–*Nonferrous Smelters–Sulfur*, Section B.2, Section C.1, Section D, Section G, Section H, Section I, Section J, Section K and Section L, as filed with the State Records and Archives Center on November 17, 1993.

(ii) Additional material.

(A) The document entitled ''Hidalgo Smelter Sulfur Recovery Procedures,'' including appendix 1, ''Physical Inventory for Sulfur Recovery Calculations,'' and appendix 2, ''Monthly Sulfur Recovery Calculation.''

(59) A revision to the New Mexico State Implementation Plan for Transportation Conformity: Albuquerque/Bernalillo County Air Quality Control Regulation (AQCR) No. 42 ''Transportation Conformity'' as adopted on November 9, 1994 and filed with the State Records and Archives Center on December 16, 1994, was submitted by the Governor on December 19, 1994. No action is taken on AQCR No. 42 Section 11.

(i) Incorporation by reference.

(A) Albuquerque/Bernalillo County Air Quality Control Regulation (AQCR) No. 42 ''Transportation Conformity'' as adopted on November 9, 1994 and filed with the State Records and Archives Center on December 16, 1994. No action is taken on AQCR No. 42 Section 11.

(ii) Additional material. None.

(60) [Reserved]

(61) A revision to the New Mexico SIP to udpate the Supplement to the New Mexico State Implementation Plan to Control Air Pollution in Area(s) of Bernalillo County Designated Nonattainment to reflect EPA's approval for lifting the construction ban in Bernalillo County, superseding the supplement dated April 14, 1993.

(i) Incorporation by reference.

(A) October 12, 1994 Supplement to the New Mexico State Implementation Plan to Control Air Pollution in Area(s) of Bernalillo County Designated Nonattainment as approved by the Albuquerque/Bernalillo County Air Quality Control Board on November 9, 1994.

(62) [Reserved]

(63) A revision to the New Mexico SIP approving a request for redesignation to attainment, a vehicle inspection and maintenance program, and the required maintenance plan for the Albuquerque/Bernalillo County CO nonattainment area, submitted by the Governor on May 11, 1995. The 1993 emissions inventory and projections were included in the maintenance plan.

(i) Incorporation by reference.

(A) A letter from the Governor of New Mexico to EPA dated April 14, 1995, in which the Governor requested redesignation to attainment based on the adopted Carbon Monoxide Redesignation Request and Maintenance Plan for Albuquerque/Bernalillo County New Mexico.

(B) Albuquerque/Bernalillo County Air Quality Control Board Regulation No. 28, Motor Vehicle Inspection, as amended April 12, 1995 and effective on July 1, 1995.

(ii) Additional material. Carbon Monoxide Redesignation Request and Maintenance Plan for Albuquerque/Bernalillo County New Mexico, approved and adopted by the Air Quality Control Board on April 13, 1995.

[37 FR 10881, May 31, 1972]

EDITORIAL NOTE: For FEDERAL REGISTER citations affecting § 52.1620, see the List of CFR Sections Affected in the Finding Aids section of this volume.

EFFECTIVE DATE NOTE: 1. At 61 FR 29973, June 13, 1996, § 52.1620 was amended by adding paragraph (c)(63), effective July 15, 1996.

2. At 61 FR 32341, June 24, 1996, § 52.1620 was amended by adding paragraph (c)(61), effective Aug. 23, 1996.

§52.1621 Classification of regions.

The New Mexico plan was evaluated on the basis of the following classifications:

Air quality control region	Pollutant				
	Particulate matter	Sulfur oxides	Nitrogen dioxide	Carbon monoxide	Ozone
Albuquerque-Mid-Rio Grande Intrastate	I	III	III	III	I
New Mexico Southern Border Intrastate	IA	IA	III	III	III
El Paso-Las Cruces-Alamogordo Interstate	I	IA	III	I	I
Four Corners Interstate	IA	IA	III	III	III
Northeastern Plains Intrastate	III	III	III	III	III
Pecos-Permian Basin Intrastate	III	III	III	III	III
Southwestern Mountains-Augustine Plains Intrastate	III	III	III	III	III
Upper Rio Grande Valley Intrastate	III	III	III	III	III

[37 FR 1081, May 31, 1972, as amended at 39 FR 16347, May 8, 1974; 42 FR 20131, Apr. 18, 1977; 45 FR 24468, Apr. 10, 1980; 45 FR 67347, Oct. 10, 1980; 52 FR 5965, Feb. 27, 1987]

§52.1622 Approval status.

With the exceptions set forth in this subpart, the Administrator approves New Mexico's plan for the attainment and maintenance of the national standards under section 110 of the Clean Air Act. Further, the Administrator finds that the plan satisfiesall requirements of the Part D of the Clean Air Act, as amended in 1977, except as noted below.

[45 FR 24468, Apr. 10, 1980]

§§52.1623—52.1626 [Reserved]

§52.1627 Control strategy and regulations: Carbon monoxide.

Part D Approval. The Albuquerque/Bernalillo County carbon monoxide maintenance plan as adopted on April 13, 1995, meets the requirements of Section 172 of the Clean Air Act, and is therefore approved.

[61 FR 29973, June 13, 1996]

EFFECTIVE DATE NOTE: At 61 FR 29973, June 13, 1996, §52.1627 was revised, effective July 15, 1996. For the convenience of the user the superseded text is set forth as follows:

§52.1627 Control strategy and regulations: Carbon monoxide.

Part D disapproval. The Bernalillo County carbon monoxide plan is disapproved for failure to meet the resource requirements of section 172 of the Clean Air Act.

[59 FR 12172, Mar. 16, 1994]

§§52.1628—52.1633 [Reserved]

§52.1634 Significant deterioration of air quality.

(a) The plan submitted by the Governor of New Mexico on February 21, 1984 (as adopted by the New Mexico Environmental Improvement Board (NMEIB) on January 13, 1984), August 19, 1988 (as revised and adopted by the NMEIB on July 8, 1988), and July 16, 1990 (as revised and adopted by the NMEID on March 9, 1990), Air Quality Control Regulation 707—Permits, Prevention of Significant Deterioration (PSD) and its Supplemental document, is approved as meeting the requirements of part C, Clean Air Act for preventing significant deterioration of air quality.

(b) The requirements of section 160 through 165 of the Clean Air Act are not met for Federally designated Indian lands. Therefore, the provisions of §52.21 (b) through (w) are hereby incorporated by reference and made a part of the applicable implementation plan, and are applicable to sources located on land under the control of Indian governing bodies.

(c) The plan submitted by the Governor in paragraph (a) of this section for Prevention of Significant Deterioration is not applicable to Bernalillo County. Therefore, the following plan described below is applicable to sources located within the boundaries of Bernalillo County (including the City of Albuquerque). This plan, submitted

by the Governor of New Mexico on April 14, 1989, August 7, 1989, May 1, 1990, and May 17, 1993, and respectively adopted on March 8, 1989, July 12, 1989, April 11, 1990, and February 10, 1993, by the Albuquerque/Bernalillo County Air Quality Control Board, containing Regulation 29—Prevention of Significant Deterioration and its April 11, 1990, Supplemental document, is approved as meeting the requirements of part C of the Clean Air Act for the prevention of significant deterioration of air quality.

[58 FR 67333, Dec. 21, 1993]

§ 52.1635 Rules and regulations.

(a) *Part D disapproval:* The requirements of § 51.281 of this chapter are not met since the measurement provisions of Sections A, B.2, and B.3 of New Mexico Regulation 506 make these sections unenforceable. Therefore, Sections A, B.2, and B.3 of Regulation 506 are disapproved.

(b) *Regulation for measurement of emission limitations (particulate matter from nonferrous smelters).* (1) This regulation applies to new and existing nonferrous smelters as they are defined in New Mexico Regulation 506. The requirements of this paragraph replace the requirements of Sections A, B.2, and B.3 of Regulation 506. All other requirements of Regulation 506 are approved as part of the plan.

(2) No person owning or operating a new nonferrous smelter shall permit, cause, suffer, or allow particulate matter emissions to the atmosphere in excess of 0.03 grains per dry standard cubic foot (as defined in 40 CFR part 60) of discharge gas.

(3) No person owning or operating an existing nonferrous smelter shall permit, cause, suffer, or allow particulate matter to the atmosphere from:

(i) The stack or stacks serving the acid plant in excess of 0.05 grains per dry standard cubic foot of discharge gas.

(ii) The stack or stacks serving the reverberatory feed dryer in excess of 0.05 grains per dry standard cubic foot of discharge gas.

(c) *Regulation for compliance testing (particulate matter from nonferrous smelter).* The requirements of § 60.8(f) of 40 CFR part 60 shall apply to paragraph (b)(2) of this section, and to each operation of Section B.4 of New Mexico Regulation 506.

[45 FR 24469, Apr. 10, 1980, as amended at 51 FR 40677, Nov. 7, 1986]

§ 52.1636 Visibility protection.

(a) The requirements of section 169A of the Clean Air Act are not met for the State of New Mexico, outside the boundaries of Bernalillo County, because the plan does not include approvable procedures meeting the requirements of 40 CFR 51.305 and 51.307 for protection of visibility in mandatory Class I Federal areas.

(b) Regulations for visibility monitoring and new source review. The provisions of §§ 52.21, 52.27, and 52.28 are hereby incorporated and made part of the applicable plan for the State of New Mexico, outside the boundaries of Bernalillo County.

(c) Long-term strategy. The provisions of § 52.29 are hereby incorporated and made part of the applicable plan for the State of New Mexico, outside the boundaries of Bernalillo County.

[58 FR 67334, Dec. 21, 1993]

§ 52.1637 Particulate Matter (PM_{10}) Group II SIP commitments.

(a) On August 19, 1988, the Governor of New Mexico submitted a revision to the State Implementation Plan (SIP) that contained commitments, from the Director of New Mexico Environmental Improvement Division, for implementing all of the required activities including monitoring, reporting, emission inventory, and other tasks that may be necessary to satisfy the requirements of the PM_{10} Group II SIPs. The New Mexico Environmental Improvement Board adopted this SIP revision on July 7 and 8, 1988.

(b) The State of New Mexico has committed to comply with the PM_{10} Group II State Implementation Plan (SIP) requirements, as articulated in the FEDERAL REGISTER notice of July 1, 1987 (52 FR 24670), for Dona Ana, Grant, Sandoval, Santa Fe, and Taos counties as provided in the New Mexico PM_{10} Group II SIPs. In addition to the SIP, a letter from the Director of New Mexico Environmental Improvement Division, dated July 15, 1988, stated that:

This letter is in reference to PM_{10} Group II State Implementation Plan (SIP) requirements. In response to the requirements of the July 1, 1987 FEDERAL REGISTER, notice on PM_{10}, the Environmental Improvement Division has prepared a Committal SIP for Group II areas. As expressed in this SIP revision, the Division is committing to carry out all required actions such as monitoring, reporting, emission inventory development, and other tasks necessary to satisfy the SIP requirements for PM_{10} Group II areas.

[54 FR 20579, May 12, 1989]

§ 52.1638 Bernalillo County particulate matter (PM_{10}) Group II SIP commitments.

(a) On December 7, 1988, the Governor of New Mexico submitted a revision to the State Implementation Plan (SIP) for Bernalillo County that contained commitments, from the Director of the Albuquerque Environmental Health Department, for implementing all of the required activities including monitoring, reporting, emission inventory, and other tasks that may be necessary to satisfy the requirements of the PM_{10} Group II SIPs. The City of Albuquerque and Bernalillo County Air Quality Control Board adopted this SIP revision on November 9, 1988.

(b) The Albuquerque Environmental Health Department has committed to comply with the PM_{10} Group II State Implementation Plan (SIP) requirements, as articulated in the FEDERAL REGISTER notice of July 1, 1987 (52 FR 24670), for Bernalillo County as provided in the County's PM_{10} Group II SIP. In addition to the SIP, a letter from the Director of the Albuquerque Environmental Health Department, dated November 17, 1988, stated that:

(1) This letter is in reference to the PM_{10} Group II SIP requirements particularly as pertains to Bernalillo County. In response to the requirements of the July 1, 1987 FEDERAL REGISTER notice on PM_{10}, the Albuquerque Environmental Health Department has prepared a Committal SIP for all of Bernalillo County which has been classified Group II for this pollutant.

(2) As expressed in the attached SIP revision, the Department is committing to carry out all required actions such as monitoring, reporting, emission inventory development and other tasks necessary to satisfy the SIP requirements for PM_{10} Group II areas.

[54 FR 23477, June 1, 1989]

§ 52.1639 Prevention of air pollution emergency episodes.

(a) The plan submitted by the Governor of New Mexico on August 19, 1988, and as adopted on July 7, 1988, by the New Mexico Environmental Improvement Board, entitled Air Pollution Episode Contingency Plan for New Mexico, is approved as meeting the requirements of section 110 of the Clean Air Act and 40 CFR part 51, subpart H. This plan is only approved for the State of New Mexico outside of the boundaries of Bernalillo County.

(b) The plan submitted by the Governor in (a) for the Air Pollution Episode Contingency Plan is not applicable to Bernalillo County. Therefore, the following plan described below is applicable to sources located within the boundaries of Bernalillo County (including the City of Albuquerque). This plan, submitted by the Governor of New Mexico on April 14, 1989, and adopted on January 26, 1989, by the Albuquerque/Bernalillo County Air Quality Control Board, entitled Air Pollution Episode Contingency Plan for Bernalillo County, is approved as meeting the requirements of section 110 of the Clean Air Act and 40 CFR part 51, subpart H.

[56 FR 38074, Aug. 12, 1991]

Subpart HH—New York

§ 52.1670 Identification of plans.

(a) Title of plans:

(1) ''Implementation Plan to Achieve Air Quality Standards—Upstate New York.''

(2) ''Implementation Plan to Achieve Air Quality Standards—Metropolitan New York City Air Quality Control Region.''

(b) The plans were officially submitted on January 31, 1972.

(c) The plan revisions listed below were submitted on the dates specified.

(1) Parts 175, 176, 177, 185, 197, and 203 of New York's Code, Rules and Regulation submitted February 9, 1972, by the Division of Air Resources, New York

State Department of Environmental Conservation.

(2) Part 200 of the New York State Code and Article 9 of the New York City Code submitted on February 11, 1972, by the Division of Air Resources, New York State Department of Environmental Conservation.

(3) Part 192 of the New York State Air Pollution Control Code submitted on February 14, 1972, by the Division of Air Resources, New York State Department of Environmental Conservation.

(4) Miscellaneous non-regulatory additions to the plan submitted on March 10, 1972, by the Division of Air Resources, New York State Department of Environmental Conservation.

(5) Miscellaneous non-regulatory additions to the plan for New York City submitted on May 19, 1972, by the Governor.

(6) Revisions recodifying regulations 200, 201, 202, 207, 212, 215, 219, 220, 222, 226, and 230 of New York's Code, Rules and Regulations submitted on May 24, 1972, by the Division of Air Resources, New York State Department of Environmental Conservation.

(7) Revisions to Parts 204, 205, 214, 217, 223, 225, 227 and 230 of New York's Code, Rules and Regulations submitted on July 20, 1972, by the Governor.

(8) Miscellaneous non-regulatory revisions to the plan submitted on August 3, 1972, by the Division of Air Resources, New York State Department of Environmental Conservation.

(9) Revision to Part 226 of New York's Code, Rules and Regulations submitted on February 6, 1973, by the New York State Department of Environmental Conservation.

(10) Revised air quality data for 1971 and 1972 for the Hudson Valley AQCR submitted on March 7, 1973, by the New York State Department of Environmental Conservation.

(11) Revision to the photochemical oxidant and carbon monoxide control strategy for New Jersey-New York-Connecticut AQCR submitted on April 17, 1973, by the Governor.

(12) Miscellaneous non-regulatory revisions to the plan submitted on April 19, 1973, by the Division of Air Resources, New York State Department of Environmental Conservation.

(13) Revision to the photochemical oxidant control strategy for the Genesee-Fingerlakes AQCR submitted on April 30, 1973, by the Governor.

(14) Non-regulatory revision to the plan submitted on May 2, 1973, by the Division of Air Resources, New York State Department of Environmental Conservation.

(15) Requests for 2-year extension and 18-month extension for attainment of the photochemical oxidant and carbon monoxide standards in the New Jersey-New York-Connecticut AQCR submitted on May 16, 1973, by the Governor.

(16) Miscellaneous non-regulatory revisions to the plan submitted on May 21, 1973, by the Division of Air Resources, New York State Department of Environmental Conservation.

(17) Miscellaneous non-regulatory revisions to the plan submitted on June 11, 1973, by the New York State Department of Environmental Conservation.

(18) Revisions to Parts 200 and 201 of New York's Codes, Rules and Regulations submitted on August 15, 1973, by the New York State Department of Environmental Conservation.

(19) Revision to sulfur oxides control strategy for New Jersey-New York-Connecticut AQCR submitted on October 26, 1973, by the New York State Department of Environmental Conservation.

(20) Revision to sulfur oxides control strategy for New Jersey-New York-Connecticut AQCR submitted on November 27, 1973, by the Governor.

(21) Revision to Part 205 of New York's Code, Rules and Regulations submitted on February 17, 1974, by the New York State Department of Environmental Protection.

(22) Revisions to Transportation Control Plan for the Genesee-Fingerlakes AQCR submitted on April 8, 1974, by the New York State Department of Environmental Conservation.

(23) AQMA designations were submitted on April 29, 1974, by the New York State Department of Environmental Conservation.

(24) Revised Part 225 (Fuel Composition and Use) was submitted on August 29, 1974, by the Commissioner of the New York State Department of Environmental Conservation.

(25) Additional information on Part 225 revision was submitted on October 11, 1974, by the New York State Department of Environmental Conservation.

(26) Additional information on Part 225 revision was submitted on December 6, 1974, by the New York State Department of Environmental Conservation.

(27) Part 203 (Indirect Sources of Air Contamination) was submitted on January 27, 1975, by the New York State Department of Environmental Conservation.

(28) Additional information on Part 225 revision was submitted on February 25, 1975, by the New York State Department of Environmental Conservation.

(29) Additional information on Part 203 was submitted on May 8, 1975, by the New York State Department of Environmental Conservation.

(30) Revisions submitted on March 16, 1976 by the New York State Department of Environmental Conservation based on special limitations issued pursuant to § 225.2(c) covering three power plants.

(31) Additional information on special limitations issued pursuant to § 225.2(c) submitted on March 22, 1976, by the New York State Department of Environmental Conservation.

(32) Revision to Part 225 submitted on September 20, 1976 and November 5, 1976 by the New York State Department of Environmental Conservation which accomplishes the following:

(i) Upon demonstration by a source owner that the use of the higher sulfur coal will not contribute to the contravention of ambient air quality standards, coal burning sources of greater than 100 million Btu per hour heat capacity may be approved for a special limitation under § 225.2. The previous heat capacity cutoff for requiring a source-generated demonstration was 250 million Btu per hour.

(ii) The formula contained in § 225.5(a), which determines sulfur dioxide emissions from the burning of fuel mixtures, is modified to include gaseous fuels. Process gases are also included in the formula by the deletion of § 225.5(a)(2), which precluded such inclusion.

(iii) Fuel suppliers are required to furnish fuel sale records upon request of the State through revision to § 225.7.

(iv) The word ''rated'' is deleted from §§ 225.1(a)(1), 225.2 and 225.6 wherever the phrase ''rated total heat input'' previously appeared.

(33) Revision submitted on March 17, 1977, by the New York State Department of Environmental Conservation which grants a ''special limitation'' under Part 225. The ''special limitation'' relaxes until May 31, 1980, the sulfur-in-fuel-oil limitation to 2.8 percent, by weight, for the Long Island Lighting Co.'s Northport Generating Facility (Units 1, 2, and 3) and Port Jefferson Generating Facility (Units 3 and 4).

(34) Revision submitted on March 3, 1977, April 5, 1977, and June 16, 1977, by the New York State Department of Environmental Conservation which grants ''special limitations'' under Part 225. These ''special limitations'' relax, until December 31, 1979, the sulfur-in-fuel-oil limitation to 2.8 percent, by weight, for air pollution sources which do not have a total heat input in excess of 250 million Btu per hour in parts of the Southern Tier East, Central New York and Champlain Valley AQCRs.

(35) Revision submitted on February 14, 1977, by the New York State Department of Environmental Conservation consisting of Section 19.0305(2)(a) of New York State's Environmental Conservation Law (ECL), as amended by Chapter 760, McKinney's 1975 Session Laws of New York, and an opinion, dated January 27, 1977, by the Honorable Louis J. Lefkowitz, Attorney General of the State of New York, interpreting the amended ECL Section 19–0305(2)(a) and Part 200.2 of Title 6 of the New York State Official Compilation of Codes, Rules, and Regulations (6 NYCRR 200.2). This revision provides for adequate State legal authority to ensure for public availability of air pollutant emission data as required under 40 CFR 51.10(e) and § 51.11(a)(6).

(36) Revision to the New York City Metropolitan Area Transportation Control Plan eliminating tolls on bridges entirely within the City (Strategy B–7) is made upon application submitted by

the Governor on October 19, 1977, pursuant to section 110(c)(5) of the Clean Air Act, as amended.

(37) Revision submitted on August 24, 1977, by the New York State Department of Environmental Conservation which grants a ''special limitation'' under Part 225. This ''special limitation'' relaxes, until May 31, 1980, the sulfur-in-fuel-oil limitation to 2.8 percent, by weight, for Units 1 through 5 of the Niagara Mohawk Power Corp.'s Oswego facility in Oswego, N.Y.

(38) Revision submitted on September 22, 1977, by the New York State Department of Environmental Conservation which grants a ''special limitation'' under Part 225. This ''special limitation'' relaxes, until October 31, 1980, the sulfur-in-coal limitation to 2.8 pounds of sulfur per million Btu, gross heat content, at the Rochester Gas and Electric Corp.'s Beebee generating station, Unit 12, in Rochester, N.Y.

(39) Revision submitted on May 6, 1977, and August 1, 1977, by the New York State Department of Environmental Conservation which grants a ''special limitation'' under part 225. Only the part of this ''special limitation'' which relaxes, until July 31, 1980, the sulfur-in-fuel-oil limitation to 1 percent sulfur, by weight, at the village of Freeport plant No. 2 generating facility, units 1 and 2, located in Nassau County, N.Y., is approved.

(40) A document entitled, ''New York State Air Quality Implementation Plan—Syracuse Area,'' submitted on March 19, 1979, by the New York State Department of Environmental Conservation.

(41) A document entitled, ''New York State Air Quality Implementation Plan—Southern Tier (Binghamton, Elmira-Corning, Jamestown),'' submitted on April 5, 1979, by the New York State Department of Environmental Conservation, only insofar as it deals with attainment of the national ambient air quality standards for particulate matter.

(42) A document entitled, ''New York State Air Quality Implementation Plan—Rochester Area,'' submitted on April 5, 1979, by the New York State Department of Environmental Conservation.

(43) A document entitled, ''New York State Air Quality Implementation Plan—Capital District and Town of Catskill,'' submitted on March 19, 1979, by the New York State Department of Environmental Conservation.

(44) Supplementary submittals of SIP revision information from the New York State Department of Environmental Conservation, insofar as they deal with all provisions except those for attainment of particulate matter standards in the Niagara Frontier Air Quality Control Region, dated:

(i) May 23, 1979, dealing with new source review and growth tracking provisions, adoption of proposed regulations, schedule for hydrocarbon emissions inventory improvements, identification of resources necessary to carry out the SIP, schedule for development of a public participation program, schedule for development of transportation planning process improvements, the need for an 18-month extension for the City of Syracuse and Village of Solvay, demonstration of control strategy adequacy for the area addressed by the Capital District and Town of Catskill plan revision document, compliance schedules for two facilities in the Hudson Valley Air Quality Control Region, and development of a local government consultation program in Jamestown, New York.

(ii) May 31, 1979, dealing with adoption of proposed regulations, hydrocarbon emission inventory improvements, schedule for development of transportation planning process improvements, and compliance schedules for two facilities in the Hudson Valley Air Quality Control Region.

(iii) June 12, 1979, providing a final draft of the proposed regulations, information on the compliance schedule for a facility in the Hudson Valley Air Quality Control Region, and general information on development of compliance schedules. The proposed regulations to be incorporated in Title 6 of the New York Code of Rules and Regulations are as follows:

(A) Part 200, General Provisions (revision);

(B) Part 211, General Prohibitions (revision);

(C) Part 212, Process and Exhaust and/or Ventilation Systems (revision);

(D) Part 223, Petroleum Refineries (revision);

(E) Part 226, Solvent Metal Cleaning Processes (new);

(F) Part 228, Surface Coating Processes (new);

(G) Part 229, Gasoline Storage and Transfer (new); and

(H) Part 231, Major Facilities.

(iv) June 18, 1979, dealing with new source review provisions, general information on development of compliance schedules, and adoption of proposed regulations.

(v) August 10, 1979, providing a comprehensive set of adopted regulations.

(vi) September 26, 1979, providing additional information regarding the EPA notice of proposed rulemaking (44 FR 44556, July 30, 1979) which deals with the adoption of regulations for control of volatile organic compound sources for source categories addressed by Control Technology Guideline documents issued subsequent to December 1977, regulatory revisions to 6 NYCRR Parts 211 and 229, the transportation planning process, emissions inventory improvements, new source review procedures, public participation and local government consultation programs, and adoption of regulations.

(vii) October 1, 1979, dealing with new source review procedures.

(viii) November 13, 1979, providing a ''declaratory ruling'' regarding interpretation of the provisions of 6 NYCRR Part 231 in implementing the new source review program.

(ix) November 14, 1979, providing supplemental documentation on the administrative process of revising regulations.

(x) February 20, 1980, dealing with public hearings to revise Parts 229 and 231 of 6 NYCRR consistent with corrective action indicated by EPA.

(45) Revision submitted on October 24, 1979, by the New York State Department of Environmental Conservation which grants a ''special limitation'' under Part 225. This ''special limitation'' relaxes, until (three years from the date of publication), the sulfur in fuel oil limitation to 1.0 percent, by weight, for the Long Island Lighting Company's Glenwood Generating Station (Units 4 and 5), and 1.54 percent, by weight, for its E. F. Barrett Generating Station (Units 1 and 2).

(46) Five documents entitled: (i) Volume I—New York State Air Quality Implementation Plan for Control of Carbon Monoxide and Hydrocarbons in the New York City Metropolitan Area;

(ii) Volume II—Detailed Descriptions of Reasonably Available Control Measures;

(iii) Volume III—Air Quality and Emission Inventory;

(iv) Volume IV—Public Participation;

(v) Total Suspended Particulates Secondary Standard: New York City Extension Request;

submitted on May 24, 1979, by the New York State Department of Environmental Conservation.

(47) A document entitled, ''New York State Air Quality Implementation Plan—Statewide Summary and Program,'' submitted on September 10, 1979, by the New York State Department of Environmental Conservation.

(48) Supplementary submittals of information from the New York State Department of Environmental Conservation regarding the New Jersey-New York-Connecticut Air Quality Control Region SIP revisions, dated:

(i) June 26, 1979, dealing with control of storage tanks at gasoline stations in Nassau, Rockland, Suffolk, and Westchester Counties.

(ii) July 30, 1979, dealing with new source review provisions for major sources of volatile organic compounds.

(iii) August 20, 1979, providing a commitment to meet ''annual reporting requirements.''

(iv) January 11, 1980, dealing with changes to the State's schedule for implementing a light duty vehicle inspection and maintenance program.

(v) March 12, 1980, providing a memorandum of understanding among the New York State Department of Environmental Conservation, New York State Department of Transportation, and the Tri-State Regional Planning Commission.

(49) Supplementary submittals of information from the Governor's Office regarding the New Jersey-New York-Connecticut Air Quality Control Region SIP revision, dated:

(i) August 6, 1979, dealing with the status of efforts to develop necessary legislation for implementing a light duty vehicle inspection and maintenance program.

(ii) November 5, 1979, providing the State's legal authority and a schedule for implementing a light duty vehicle inspection and maintenance program.

(iii) February 6, 1980, committing to providing additional information on systematic studies of transportation measures, committing to clarification of SIP commitments, and providing additional information on the State's light duty vehicle inspection and maintenance program.

(50) Supplementary information, submitted by the New York State Department of Transportation on October 17, 1979, providing clarification to ''reasonably available control measures'' commitments contained in the New Jersey-New York-Connecticut Air Quality Control Region SIP revision.

(51) Revision submitted on January 29, 1980, by the New York State Department of Environmental Conservation which grants a ''special limitation'' under 6 NYCRR Part 225. This ''special limitation'' relaxes, until [three years from the date of publication], the sulfur-in-fuel-oil limitation to 0.60 percent, by weight, for Orange and Rockland Utilities', Inc. Bowline Point Generating Station, units 1 and 2, Haverstraw, New York.

(52) Revisions to Parts 229 and 231 of Title 6, New York Code of Rules and Regulations, submitted on May 1, 1980, by the New York State Department of Environmental Conservation.

(53) Revision submitted on November 29, 1980, by the New York State Department of Environmental Conservation which grants a ''special limitation'' under 6 NYCRR Part 225. This ''special limitation'' relaxes, until one year from [the date of publication], the sulfur-in-fuel-oil limitation to 1.5 percent, by weight, for the Consolidated Edison Company of New York, Inc. Arthur Kill generating facility, units 2 and 3, Staten Island, New York and Ravenswood generating facility, unit 3, Queens, New York.

(54) A document entitled, ''New York State Air Quality Implementation Plan—Niagara Frontier, Erie and Niagara Counties,'' submitted on May 31, 1979, by the New York State Department of Environmental Conservation. The administrative orders for Bethlehem Steel Corporation, referenced by this document, are not being incorporated as part of the plan.

(55) A supplemental submittal, dated May 21, 1980, from the New York State Department of Environmental Conservation which includes three listings of permanent projects, demonstration projects and transportation related studies committed to in the non-public transit portion of the plan for the New York City metropolitan area.

(56) Revision submitted on October 31, 1979, and supplemented on April 28, 1980, and May 20, 1980, by the New York State Department of Environmental Conservation which grants a ''special limitation'' under 6 NYCRR Part 225. This ''special limitation'' relaxes to 2.8 percent, by weight, until December 31, 1982, the sulfur-in-fuel-oil limitation applicable to fuel burning sources which have a capacity less than 250 million BTU per hour and which are located in:

(i) The Southern Tier East Air Quality Control Region (AQCR), with the exception of all sources in Broome County;

(ii) The Central New York AQCR, with the exception of the Oswego Facilities Trust Company in Oswego County and all sources in Onondaga County;

(iii) The Champlain Valley (Northern) AQCR, with the exception of all sources in the City of Glens Falls and sources in the Town of Queensbury which have a total heat input greater than 100 million BTU per hour.

(57) A supplemental submittal, dated July 2, 1980, from the New York State Department of Environmental Conservation which included criteria and procedures for making assessments of the consistency and conformity of the outputs of the transportation planning process with the SIP.

(58) Revision submitted on September 17, 1980, by the New York State Department of Environmental Conservation which grants a ''special limitation'' under 6 NYCRR Part 225. This ''special limitation'' relaxes to 2.8 percent, by weight, until three years from March

19, 1981, the sulfur-in-fuel oil limitation applicable to unit 5 of Niagara Mohawk Power Corporation's Oswego generating facility, located in Oswego County.

(59) Supplemental information to ''New York State Air Quality Implementation Plan—Statewide Summary and Program,'' June 1979, submitted on December 18, 1980, by the New York State Department of Environmental Conservation dealing with provisions which commit the State to meet the subpart C requirements of 40 CFR part 58 pertaining to State and Local Air Monitoring Stations (SLAMS) including the air quality assurance requirements of Appendix A, the monitoring methodologies of Appendix C, the network design criteria of Appendix D and the probe siting criteria of Appendix E.

(60) A supplemental submittal, dated July 28, 1980, from the New York State Department of Environmental Conservation which includes:

—Key milestones associated with projects relating to transportation control measures which are part of the SIP;

—An improved program of study for the broader application of certain transportation control measures, and supplemental information on existing studies;

—Additional documentation necessary to determine the reasonableness of the measure, ''Controls on Extended Vehicle Idling;''

—Criteria and procedures for making changes to transportation projects contained in the SIP;

—Criteria and procedures for making changes to transportation studies contained in the SIP; and

—The identification of the resources necessary to carry out the transportation planning process and certain transportation elements of the SIP.

(61) A supplemental submittal entitled ''New York State Air Quality Implementation Plan, the Moynihan/Holtzman Amendment Submission: Transit Improvements in the New York City Metropolitan Area, May 1979,'' submitted on May 24, 1979, by the New York State Department of Environmental Conservation.

(62) [Reserved]

(63) Revision submitted on April 29, 1980, by the New York State Department of Environmental Conservation which grants a ''special limitation'' establishing, until three years from September 24, 1981, a sulfur-in-fuel-oil limitation of 2.8 percent, by weight, for the Long Island Lighting Company's Northport generating facility, units 1, 2 and 3 and the Port Jefferson generating facility, units 3 and 4.

(64) Revision submitted on August 7, 1981, by the New York State Department of Environmental Conservation which grants a ''special limitation'' to relax to 1.5 percent, by weight, for up to two years from February 22, 1982, the sulfur-in-fuel-oil limitation applicable to units 2 and 3 of Consolidated Edison of New York State, Inc.'s Arthur Kill generating facility and to unit 3 of its Ravenswood generating facility, all located in New York City.

(65) Revision submitted on January 8, 1982, by the New York State Department of Environmental Conservation which grants a ''special limitation'' to relax to 2.8 percent, by weight, for up to three years from March 5, 1982, the sulfur-in-fuel-oil limitation applicable to the General Electric Company's Rotterdam Steam Generating Facility located in Schenectady, New York.

(66) Revision submitted on July 9, 1982, by the New York State Department of Environmental Conservation which grants a ''special limitation'' allowing the New York State Office of Mental Health's Kings Park Psychiatric Facility to burn coal with a maximum sulfur content of 2.2 pounds of sulfur per million Btu gross heat content, for up to three years from August 11, 1982.

(67) A March 23, 1981, letter from the New York State Department of Environmental Conservation including an interim policy memorandum detailing procedures to be used by the State to determine compliance with the State's emission standard for coke oven gas.

(68) Regulatory information submitted by New York State Department of Environmental Conservation for controlling volatile organic compounds, dated:

(i) July 2, 1981, providing a comprehensive set of adopted regulations.

(ii) August 19, 1981, Consent Order, 81–36, 9–04.20, with Dunlop Tire and Rubber Corporation for control of volatile organic compounds.

(A) Amendment of Consent Order dated January 29, 1982.

(B) Amendment of Consent Order dated March 3, 1982.

(iii) July 25, 1983, providing final regulations to be incorporated into Title 6 of the New York Code of Rules and Regulations.

(iv) November 13, 1981, letter from Harry Hovey, Director of Air Division, New York State Department of Environmental Conservation concerning applicability of regulations in redesignated AQCR's.

(v) April 27, 1983, letter from Harry Hovey, Director of Air Division, New York State Department of Environmental Conservation concerning maximum operating heat input.

(69) State Implementation Plan revision dated February 15, 1984, from the Department of Environmental Conservation consisting of changes to New York State Department of Motor Vehicles monitoring and enforcement procedures for motor vehicle emission inspection stations.

(70) A State Implementation Plan for attainment of the lead (Pb) standards was submitted on September 21, 1983. Additional information was submitted in a letter dated February 16, 1984. These submittals included the following:

(i) Revision to Part 225 of Title 6, Official Compilation of Codes, Rules and Regulations of the State of New York.

(ii) Revision to Part 231 of Title 6, Official Compilation of Rules and Regulations of the State of New York.

(iii) Air Guide-14, ''Process Sources Which Emit Lead or Lead Compounds.''

(iv) Air Guide-17, ''Trade and Use of Waste Fuel for Energy Recovery Purposes.''

(71) Revision submitted on August 21, 1984, by the New York State Department of Environmental Conservation which grants a ''special limitation'' establishing, until September 24, 1986, from December 20, 1984, a maximum sulfur-in-fuel-oil limitation of 2.8 percent, by weight, and from September 25, 1986 until December 31, 1987, a sulfur-in-fuel-oil limitation of 2.0 percent, by weight, for the Long Island Lighting Company's Northport generating facility, units 1, 2 and 3, and the Port Jefferson generating facility, units 3 and 4.

(72) Revisions to the New York State Implementation Plan for attainment and maintenance of the ozone and carbon monoxide standards in the New York City metropolitan area submitted on July 1, 1982, August 3, 1982, July 25, 1983, February 7, 15, 17, 1984, and October 1, 17, 1984, November 30, 1984, January 4, and 30, 1985, and March 6, 1985, by the Governor of New York State and by the New York State Department of Environmental Conservation.

(73) Revision to the New York State Implementation Plan submitted by the New York State Department of Environmental Conservation on June 7 and October 14, 1982, to allow Orange and Rockland Utilities, Inc. to reconvert its Lovett Generating Station in Stony Point from oil to coal. This action grants the utility a ''special limitation'' under Part 225 to relax the existing emission limit for coal burning from 0.4 pounds of sulfur dioxide per million British thermal units (1b/MMBtu) to 1.0 lb/MMBtu for units 4 and 5 if both are operated on coal, or to 1.5 lb/MMBtu for one unit if the other is operated on fuel oil, natural gas, or is not operated. A letter dated September 5, 1984, from Orange and Rockland Utilities, Inc., committing to meet the terms and conditions of EPA's August 30, 1984, letter.

(74) Regulatory information submitted by New York State Department of Environmental Conservation for controlling various pollutants and establishing continuous emission monitoring requirements for sulfuric and nitric acid plants, dated December 27, 1984, providing adopted revisions to regulations Parts 201, 212, 223 and 224.

(75) A revision to the New York State Implementation Plan for attainment and maintenance of the ozone standards was submitted on January 2, 1986, by the New York State Department of Environmental Conservation.

(i) Incorporation by reference.

(A) Part 217, ''Emissions from Motor Vehicles Propelled by Gasoline Engines,'' effective January 29, 1986.

(76) [Reserved]

(77) Revisions to the State Implementation Plan submitted by New York State Department of Environmental Conservation for controlling volatile organic compounds.

(i) Incorporation by reference. Adopted regulations Parts 200, 229, and 230, submitted on March 15, 1985.

(ii) Additional material. (A) Letters dated December 31, 1984, and March 15, 1985, concerning SIP commitments for ''Reevaluation of RACT,'' and ''Controls at Major Facilities,'' respectively.

(B) Letters dated November 2, 1984, and April 3, 1987, concerning the manufacture of high-density polyethylene, polypropylene, and polystrene resins.

(78) A revision to the New York State Implementation Plan was submitted on November 6, 1987, and February 17, 1988, by the New York State Department of Environmental Conservation.

(i) Incorporation by reference.

(A) Operating Permit number A551800097900017 for Polychrome Corporation effective January 29, 1988, submitted by the New York State Department of Environmental Conservation.

(ii) Additional material.

(79) Revisions to the New York State Implementation Plan (SIP) for ozone submitted on January 31, 1989, and March 13, 1989, by the New York State Department of Environmental Conservation (NYSDEC) for its state gasoline volatility control program, including any waivers under the program that New York may grant. In 1989, the control period will begin on June 30.

(i) Incorporation by reference. Subpart 225–3 of Title 6 of the Official Compilation of Codes, Rules and Regulations of the State of New York entitled ''Fuel Composition and Use—Volatile Motor Fuels,'' adopted on December 5, 1988, and effective on January 4, 1989.

(ii) Additional material. April 27, 1989, letter from Thomas Jorling, NYSDEC, to William Muszynski, EPA Region II.

(80) Revisions to the New York State Implementation Plan (SIP) for ozone submitted on July 9, 1987, and April 8, 1988, by the New York State Department of Environmental Conservation (NYSDEC).

(i) Incorporation by reference. Amendments to part 230, title 6 of the New York Code of Rules and Regulations entitled ''Gasoline Dispensing Sites and Transport Vehicles,'' adopted on March 2, 1988.

(ii) Additional material. (A) Explanation of Stage II Applicability Cutoffs, prepared by the NYSDEC, dated June 20, 1986.

(B) NYSDEC testing procedures for Stage II Vapor Recovery Systems.

(81) [Reserved]

(82) Revisions to the New York State Implementation Plan (SIP) for total suspended particulates in the Niagara Frontier area, dated January 5, 1987, submitted by the New York State Department of Environmental Conservation (NYSDEC).

(i) Incorporation by reference:

(A) Part 214 of title 6 of the Official Compilation of Codes, Rules, and Regulations of the State of New York, entitled ''Byproduct Coke Oven Batteries,'' adopted on April 23, 1984, and effective May 23, 1984.

(B) Part 216 of title 6 of the Official Compilation of Codes, Rules, and Regulations of the State of New York, entitled ''Iron And/Or Steel Processes,'' adopted on April 23, 1984, and effective on May 23, 1984.

(C) Consent Order No. 84–135, dated October 29, 1984, between NYSDEC and the Bethlehem Steel Corporation.

(D) Consent Order No. 84–131, dated October 18, 1984, between NYSDEC and the Bethlehem Steel Corporation.

(E) May 24, 1985, letter from Peter J. Burke, NYSDEC, to W.T. Birmingham, Bethlehem Steel Corporation, revising Consent Order No. 84–131.

(F) Test procedures for particulate matter source emissions testing at Bethenergy's Lackawanna Coke Oven Batteries 7, 8, and 9, prepared by SENES Consultants Limited, dated January 14, 1988.

(ii) Additional material:

(A) January 5, 1987, letter from Harry H. Hovey, Jr., NYSDEC, to Raymond Werner, EPA, providing an attainment and maintenance demonstration for TSP in the South Buffalo-Lackawanna area and requesting its inclusion as part of the TSP SIP for the Niagara Frontier.

(B) August 21, 1987, letter from Edward Davis, NYSDEC, to William S. Baker, EPA, responding to July 27, 1987, letter from EPA requesting additional information needed for the review of Niagara Frontier TSP SIP request.

(C) June 20, 1988, letter from Edward Davis, NYSDEC, to William S. Baker, EPA, responding to May 19, 1988, letter

from EPA requesting additional information on test procedures for Bethenergy's Lackawanna Coke Oven Batteries.

(83) A revision submitted on September 18, 1990, with additional materials submitted on April 12, 1991, and June 3, 1991, by the New York State Department of Environmental Conservation that revises the SO_2 emission limit for units 4 and 5 of Orange and Rockland Utilities' Lovett Generating Station.

(i) Incorporation by reference. Sulfur dioxide emission limits incorporated into the Certificates to Operate units 4 and 5 of the Orange and Rockland Utilities' (ORU) Lovett Generating Station issued April 3, 1991, and the materials which pertain to the SO_2 emission limits, monitoring and recordkeeping which are incorporated by reference into the Certificates to Operate for units 4 & 5. This includes the following:

(A) The special conditions attached to certificates;

(B) April 13, 1982, Decision of the Commissioner; and

(C) October 14, 1982, Amended Commissioner's Order.

(ii) Additional materials:

(A) Lovett Generating Station Model Evaluation Study, May 1989,

(B) Lovett Generating Station Emission Limitation Study, May 1989,

(C) Review of Orange and Rockland Model Evaluation Study and Emission Limitation Study for Lovett Facility for Units 4 & 5, January 27, 1990, and

(D) Lovett Generating Station Air Quality and Meteorological Monitoring Network Quarterly Reports.

(84) A revision to the New York State Implementation Plan (SIP) for attainment and maintenance of the ozone standard dated January 8, 1992, submitted by the New York State Department of Environmental Conservation.

(i) Incorporation by reference.

(A) Amendments to Part 200 of Title 6 of the Official Compilation of Codes, Rules, and Regulations of the State of New York, entitled ''General Provisions'' adopted on December 3, 1991, and effective January 16, 1992.

(B) New Part 236 of Title 6 of the Official Compilation of Codes, Rules, and Regulations of the State of New York, entitled ''Synthetic Organic Chemical Manufacturing Facility Component Leaks'' adopted on December 16, 1991, and effective January 16, 1992.

(ii) Additional material.

(A) January 8, 1992, letter from Thomas Allen, to Conrad Simon, EPA, requesting EPA approval of the amendments to Parts 200 and 236.

(85) Revisions to the New York State Implementation Plan (SIP) for ozone concerning the control of volatile organic compounds from surface coating and graphic arts sources, dated October 14, 1988, December 5, 1988, and May 2, 1989, submitted by the New York State Department of Environmental Conservation (NYSDEC).

(i) Incorporation by reference.

(A) Amendments to Title 6 of the New York Code of Rules and Regulations (NYCRR) Part 228 ''Surface Coating Processes,'' effective September 15, 1988, and Part 234 ''Graphic Arts,'' effective September 15, 1988

(ii) Additional material.

(A) May 2, 1989 letter from Thomas C. Jorling, NYSDEC, to Conrad Simon, EPA, requesting EPA substitute controls in Parts 228 and 234 for controls committed to be included in Part 212, Processes & Exhaust and/or Ventilation Systems.

(86) Revision to the state implementation plan for Onondaga County was submitted by the Governor on November 13, 1992. Revisions include a maintenance plan which demonstrates continued attainment of the NAAQS for carbon monoxide through the year 2003.

(i) Incorporation by reference.

(A) Maintenance Plan—Chapter 8 of New York State Implementation Plan Redesignation Request for Onondaga County as Attainment for Carbon Monoxide, November 1992.

(ii) Additional information.

(A) New York State Implementation Plan—Redesignation Request for Onondaga County as Attainment for Carbon Monoxide, November 1992.

(B) January 12, 1993, letter from Thomas M. Allen, NYSDEC to Conrad Simon, EPA, providing the results of the public hearing on the State's proposal.

(C) January 12, 1993, letter from Thomas M. Allen, NYSDEC, to Conrad Simon, EPA, providing documentation of emission inventory submitted on November 13, 1992.

(D) June 18, 1993, letter from Thomas M. Allen, NYSDEC, to Conrad Simon, EPA, correcting submitted material.

(87) A revision to the New York State Implementation Plan (SIP) for attainment and maintenance of the ozone standard dated October 14, 1988, submitted by the New York State Department of Environmental Conservation.

(i) Incorporation by reference:

(A) New part 205 of title 6 of the New York Code of Rules and Regulations of the State of New York, entitled ''Architectural Surface Coatings,'' effective on September 15, 1988.

(ii) Additional material.

(A) December 5, 1988 letter from Thomas Allen, to Conrad Simon, EPA, requesting EPA approval of the amendments to part 205.

(88) Revision to the New York State Implementation Plan (SIP) for ozone, submitting a low emission vehicle program for a portion of the Clean Fuel Fleet program, dated May 15, 1994 and August 9, 1994 submitted by the New York State Department of Environmental Conservation (NYSDEC).

(i) Incorporation by reference. Part 218, ''Emission Standards for Motor Vehicles and Motor Vehicle Engines,'' effective May 28, 1992.

(ii) Additional material.

May 1994 NYSDEC Clean Fuel Fleet Program description.

[37 FR 10882, May 31, 1972]

EDITORIAL NOTE: For FEDERAL REGISTER citations affecting § 52.1670, see the List of CFR Sections Affected in the Finding Aids section of this volume.

§ 52.1671 Classification of regions.

The New York plans were evaluated on the basis of the following classifications:

Air quality control region	Pollutant				
	Particulate matter	Sulfur oxides	Nitrogen dioxide	Carbon monoxide	Photochemical oxidants (hydrocarbons)
Niagara Frontier Intrastate	I	I	III	III	I
Champlain Valley Interstate	II	II	III	III	III
Central New York Intrastate	I	II	III	I	I
Genesee-Finger Lakes Intrastate	II	II	III	III	I
Hudson Valley Intrastate	I	II	III	III	III
Southern Tier East Intrastate	II	II	III	III	III
Southern Tier West Intrastate	II	II	III	III	III
New Jersey-New York-Connecticut Interstate	I	I	I	I	I

[37 FR 10882, May 31, 1972, as amended at 39 FR 16347, May 8, 1974]

§ 52.1672 [Reserved]

§ 52.1673 Approval status.

(a) With the exceptions set forth in this section, the Administrator approves the New York State Implementation Plan (SIP) for the attainment and maintenance of the national standards under section 110(a)(2) of the Clean Air Act. Furthermore, the Administrator finds that the plan satisfies all requirements of Part D, Title I of the Clean Air Act, as amended in 1977. In addition, continued satisfaction of the requirements of Part D for the ozone element of the SIP depends on the adoption and submittal of requirements for reasonable available control technology (RACT) by January 1985 and adoption and submittal by each subsequent January of additional RACT requirements for sources covered by Control Techniques Guidelines (CTGs) issued by the previous January.

(b) [Reserved]

[50 FR 25079, June 17, 1985, as amended at 56 FR 12453, Mar. 26, 1991]

§ 52.1674 Requirements for state implementation plan revisions relating to new motor vehicles.

New York's adopted LEV program must be revised to the extent necessary for the state to comply with all aspects of the requirements of § 51.120.

[60 FR 4737, Jan. 24, 1995]

§ 52.1675 Control strategy and regulations: Sulfur oxides.

(a)–(c) [Reserved]

(d) Section 225.3(e) of Subchapter A, Chapter III, Title 6 of New York State's Official Compilation of Codes, Rules and Regulations, is disapproved since it does not provide for the type of permanent control necessary to assure attainment and maintenance of national standards.

(e) Any special limitation promulgated by the Commissioner under 6 NYCRR section 225.2(b) and (c), any exception issued by the Commissioner under 6 NYCRR section 225.3, and any permission issued by the Commissioner under 6 NYCRR section 225.5(c) shall not exempt any person from the requirements otherwise imposed by 6 NYCRR Part 225; provided that the Administrator may approve such special limitation, exception or permission as a plan revision when the provisions of this part, section 110 (a)(3)(A) of the Act, and 40 CFR part 51 (relating to approval of and revisions to State implementation plans) have been satisfied with respect to such special limitation, exception or permission.

(f) The following applies to the Environmental Protection Agency's approval as a SIP revision of the ''special limitation'' promulgated by the Commissioner of the New York State Department of Environmental Conservation on November 20, 1979 permitting the purchase and use by the Consolidated Edison Company of New York, Inc. of fuel oil with a maximum sulfur content of 1.5 percent, by weight, at units 2 and 3 of its Arthur Kill generating facility on Staten Island, New York and unit 3 of its Ravenswood generating station in Queens, New York:

(1) On or before the ''Date of Conversion'' indicated below, each ''Facility'' indicated below shall combust only natural gas for the duration of the special limitation.

(a) City College of New York, Amsterdam Ave. between W. 135th St. and W. 138th St., Manhattan—

North Campus Academic Center: Converted North Campus Main Boiler (Compton Hall): Two boilers shut-down; One boiler converted;

South Campus—Boiler Plant: Converted;

North Campus Science and Physical Education Building: October 1, 1980.

(b) Harlem Hospital, 135th St. and Lenox Ave., Manhattan: April 1, 1981;

(c) Columbia University, 116th St. and Broadway, Manhattan: Converted;

(d) New York City Housing Auth., Senator Robert F. Wagner Houses, 23–96 First Ave.: October 1, 1980;

(e) New York City Housing Auth., Frederick Douglass Houses, 880 Columbus Ave., Manhattan: October 1, 1980;

(f) New York City Housing Auth., Manhattanville Houses, 549 W. 126th St., Manhattan: October 1, 1980;

(g) New York City Housing Auth., St. Nicholas Houses, 215 W. 127th St.: October 1, 1980;

(h) New York City Housing Auth., General Grant Houses, 1320 Amsterdam Ave., Manhattan: October 1, 1980;

(i) New York City Housing Auth., Harlem River Houses, 211–0–1 W. 151st Street, Manhattan: October 1, 1980;

(j) New York City Housing Auth., Martin Luther King Towers, 90 Lenox Ave., Manhattan: October 1, 1980;

(k) New York City Housing Auth., Drew Hamilton Houses, 210 W. 142nd Street, Manhattan: October 1, 1980.

(2) If any of the facilities identified in paragraph (g)(1) of this section, fail to meet the requirements of that paragraph, the Consolidated Edison Company shall not burn fuel oil with a sulfur content in excess of 0.30 percent, by weight. For this purpose, Consolidated Edison shall maintain a reserve supply of fuel oil with a maximum sulfur content of 0.30 percent, by weight, and shall have a mechanism to switch promptly to the use of such fuel oil.

(3) EPA's approval of this revision to the New York SIP will extend for a period of twelve months from [August 11, 1980] or such longer period limited to twelve months from the date on which fuel oil with a sulfur content exceeding 0.30 percent, by weight, is first burned at any of the affected Consolidated Edison facilities. However, once the use of high sulfur fuel oil has commenced, failure to meet any of the conversion dates specified in paragraph (g)(1) of this section shall not extend the period of EPA approval.

(4) On or before July 1, 1981 the Consolidated Edison Company of New York, Inc. shall displace the use of approximately 7.1 million gallons of residual oil, as projected on an annual basis, through a gas conversion program to be implemented within a two-

mile radius of the Mabel Dean Bacon High School Annex monitor. Beginning on the first day of the month in which fuel oil with a sulfur content exceeding 0.30 percent, by weight, is first burned at any of the affected Consolidated Edison facilities and continuing for twelve months thereafter, the Consolidated Edison Company of New York, Inc. shall submit a report to the EPA, on a monthly basis, which includes, but is not limited to, the following information regarding this program:

(i) The total gallonage of fuel oil capacity converted (projected to an annual amount) as of that date,

(ii) The potential gallonage from sources at which conversion work has begun, and

(iii) The projected gallonage from sources expected to be converted by July 1, 1981.

(g) The Environmental Protection Agency has approved a New York State Implementation Plan revision relating to the SO_2 emission limit for units 4 and 5 of Orange and Rockland Utilities' Lovett generating station. The revision which allows Lovett to burn coal at units 4 and 5 was submitted by the New York State Department of Environmental Conservation (NYSDEC) on September 18, 1990, with additional materials submitted on April 12, 1991, and June 3, 1991. This action sets the emission limit applicable to the facility to 1.0 pound per million British thermal units (MMBtu) for units 4 and 5 if both are operated on coal, or to 1.5 lb/MMBtu for one unit if the other is operated on fuel oil, natural gas or is not operated at all, as set forth in the Certificates to Operate issued by NYSDEC on April 3, 1991. The SO_2 emission limit, monitoring and recordkeeping requirements pertaining to the SO_2 emissions are incorporated by reference into the Certificates to Operate.

[37 FR 19815, Sept. 22, 1972, as amended at 38 FR 31296, Nov. 13, 1973; 39 FR 1441, Jan. 9, 1974; 39 FR 9666, Mar. 13, 1974; 39 FR 30038, Aug. 20, 1974; 40 FR 23745, June 2, 1975; 45 FR 53144, Aug. 11, 1980; 50 FR 23007, May 30, 1985; 56 FR 37477, Aug. 7, 1991; 60 FR 33923, June 29, 1995]

§52.1676 Control strategy: Nitrogen dioxide.

(a) The requirements of §52.14(c)(3) of this chapter as of May 8, 1974 (39 FR 16347), are not met since the plans do not provide for the degree of nitrogen oxides emission reduction attainable through the application of reasonably available control technology in the New York portion of the New Jersey-New York-Connecticut Interstate Region.

(b) Section 227.5(b) of 6 NYCRR, as submitted on August 10, 1979, is disapproved because it is inconsistent with 40 CFR Subpart G, Control strategy: Carbon monoxide, hydrocarbons, ozone, and nitrogen dioxide.

[37 FR 19815, Sept. 22, 1972, as amended at 39 FR 16347, May 8, 1974; 46 FR 55693, Nov. 12, 1981; 51 FR 40675, 40677, Nov. 7, 1986]

§52.1677 Compliance schedules.

(a) The requirements of §51.261 of this chapter are not met since the compliance schedule for Part 220 of Subchapter A, Chapter III, Title 6 of New York State's Official Compilation of Codes, Rules and Regulations, does not provide for attainment and maintenance of the national standards for particulate matter by the dates required by the Act.

(b) The requirements of §51.262(a) of this chapter are not met since sections 223.1(a), 225.3(c), and 230.2(d) of Subchapter A, Chapter III, Title 6 of New York State's Official Compilation of Codes, Rules and Regulations do not require the reporting of periodic increments of progress toward compliance by affected sources or categories of sources.

(c) The requirements of §51.262(a) of this chapter are not met since compliance schedules with adequate increments of progress have not been submitted for every source for which they are required.

(d) Federal compliance schedules. (1) The owner or operator of any boiler or furnace of more than 250 million Btu per hour heat input subject to the requirements of section 225.3(c) of Subchapter A, Chapter III, Title 6 of New York State's official compilation of

codes, rules, and regulations shall notify the Administrator, no later than October 1, 1973, of his intent to utilize either low-sulfur fuel or stack gas desulfurization to meet the requirements of said regulation.

(2) Any owner or operator of a stationary source subject to paragraph (d)(1) of this section who elects low-sulfur fuel shall be subject to the following compliance schedule:

(i) November 1, 1973—Submit to the Administrator a projection of the amount of fuel, by types, that will be substantially adequate to enable compliance with section 225.3(c) of the codes, rules, and regulations cited in paragraph (d)(1) of this section on June 30, 1975, and October 1, 1975, respectively, and for at least one year thereafter.

(ii) December 31, 1973—Sign contracts with fuel suppliers for fuel requirements as projected above.

(iii) January 31, 1974—Submit a statement as to whether boiler modifications will be required. If modifications will be required, submit plans for such modifications.

(iv) March 15, 1974—Let contracts for necessary boiler modifications, if applicable.

(v) June 15, 1974—Initiate onsite modifications, if applicable.

(vi) February 28, 1975—Complete onsite modifications, if applicable.

(vii) (*a*) June 30, 1975—Final compliance with the low-sulfur fuel requirements of section 225.3(c) of Subchapter A, Chapter III, Title 6 of New York State's official compilation of codes, rules, and regulations.

(*b*) October 1, 1975—Final compliance with the low-sulfur fuel requirements of Subchapter A, Chapter III, Title 6 of New York State's official compilation of codes, rules, and regulations.

(3) Any owner or operator of a stationary source subject to paragraph (d)(1) of this section who elects to utilize stack gas desulfurization shall be subject to the following compliance schedule:

(i) November 1, 1973—Let necessary contracts for construction.

(ii) March 31, 1974—Initiate onsite construction.

(iii) February 28, 1975—Complete onsite construction.

(iv) (*a*) June 30, 1975—Final compliance with the requirements of section 225.3(c) of Subchapter A, Chapter III, Title 6 of New York State's official compilation of codes, rules, and regulations.

(*b*) October 1, 1975—Final compliance with the requirements of Subchapter A, Title 6 of New York State's official compilation of codes, rules, and regulations.

(v) If a performance test is necessary for a determination as to whether compliance with subpart (3)(iv)(a) or (b) has been achieved, such a test must be completed by June 30, 1975, or October 1, 1975, respectively. Ten days prior to such a test, notice must be given to the Administrator to afford him the opportunity to have an observer present.

(4) The owner or operator of any boiler or furnace of more than 250 million Btu per hour heat input subject to the requirement of section 230.2(d) of Subchapter A, Chapter III, Title 6 of the New York State's official compilation of codes, rules, and regulations shall notify the Administrator no later than October 1, 1973, of his intent to utilize either low-sulfur fuel or stack gas desulfurization to meet the requirements of said regulation.

(5) Any owner or operator of a stationary source subject to paragraph (d)(4) of this section who elects low-sulfur fuel shall be subject to the following compliance schedule:

(i) November 1, 1973—Submit to the Administrator a projection of the amount of fuel, by types, that will be substantially adequate to enable compliance with section 230.2(d) of the codes, rules, and regulations cited in paragraph (4) of this paragraph (d) on October 1, 1974, and for at least one year thereafter.

(ii) December 31, 1973—Sign contracts with fuel suppliers for fuel requirements as projected above.

(iii) January 31, 1974—Submit a statement as to whether boiler modifications will be required. If modifications will be required, submit plans for such modifications.

(iv) March 15, 1974—Let contracts for necessary boiler modifications, if applicable.

(v) June 15, 1974—Initiate onsite modifications, if applicable.

(vi) September 3, 1974—Complete onsite modifications, if applicable.

(vii) October 1, 1974—Final compliance with the low-sulfur fuel requirements of section 230.2(d) of Subchapter A, Chapter III, Title 6 of New York State's official compilation of codes, rules, and regulations.

(6) Any owner or operator of a stationary source subject to paragraph (d)(5) of this section who elects to utilize stack gas desulfurization shall be subject to the following compliance schedule:

(i) November 1, 1973—Let necessary contracts for construction.

(ii) December 31, 1973—Initiate onsite construction.

(iii) September 1, 1974—Complete onsite construction.

(iv) October 1, 1974—Final compliance with the requirements of section 230.2(d) of Subchapter A, Chapter III, Title 6 of New York State's official compilation of codes, rules, and regulations.

(v) If a performance test is necessary for a determination as to whether compliance has been achieved, such a test must be completed by October 1, 1974. Ten days prior to such a test, notice must be given to the Administrator to afford him the opportunity to have an observer present.

(7) The owner or operator of any petroleum refinery subject to the requirements of section 223.1(a) of Subchapter A, Chapter III, Title 6 of New York State's official compilation of codes, rules, and regulations shall comply with the compliance schedule in paragraph (d)(8) of this section.

(8) Any owner or operator of a petroleum refinery subject to paragraph (d)(7) of this section shall be subject to the following compliance schedule:

(i) November 1, 1973—Submit final control plan to the Administrator.

(ii) February 28, 1974—Let necessary contracts for construction or installation of emission control equipment.

(iii) June 30, 1974—Initiate onsite construction or installation of emission control equipment.

(iv) November 30, 1974—Complete onsite construction or installation of emission control equipment.

(v) December 31, 1974—Final compliance with the requirements of section 223.1(a) of Subchapter A, Chapter III, Title 6 of New York State's official compilation of codes, rules, and regulations.

(9) The owner or operator of any coke oven battery subject to the requirements of Part 214, sections 214.2 and 214.4, of Subchapter A, Chapter III, Title 6 of the New York State's official compilation of codes, rules, and regulations for a facility with an environmental rating B as determined by Part 212 of Subchapter A, Chapter III, Title 6 of the New York State official compilation of codes, rules, and regulations, shall comply with the compliance schedule in paragraph (d)(10) of this section.

(10) Any owner or operator of a coke oven battery subject to paragraph (d)(9) of this section shall be subject to the following compliance schedule:

(i) November 1, 1973—Submit final control plan to the Administrator.

(ii) February 1, 1974—Let necessary contract for construction or installation of control equipment.

(iii) April 15, 1974—Initiate onsite construction or installation of control equipment.

(iv) November 30, 1974—Complete onsite construction or installation of control equipment.

(v) December 31, 1974—Final compliance with the requirements of Part 214, sections 214.2 and 214.4, of the Subchapter A, Chapter III, Title 6 of the New York State's official compilation of codes, rules, and regulations.

(11) Any owner or operator subject to a compliance schedule above shall certify to the Administrator, within five days after the deadline for each increment of progress in that schedule, whether or not the increment has been met.

(12) (i) None of the above paragraphs shall apply to a source which is presently in compliance with applicable regulations and which has certified such compliance to the Administrator by October 1, 1973. The Administrator may request whatever supporting information he considers necessary for proper certification.

(ii) Any compliance schedule adopted by the State and approved by the Administrator shall satisfy the requirements of this paragraph for the affected source.

(iii) Any owner or operator subject to a compliance schedule in this paragraph may submit to the Administrator no later than October 1, 1973, a proposed alternative compliance schedule. No such compliance schedule may provide for final compliance after the final compliance date in the applicable compliance schedule of this paragraph. If promulgated by the Administrator, such schedule shall satisfy the requirements of this paragraph for the affected source.

(13) Nothing in this paragraph shall preclude the Administrator from promulgating a separate schedule for any source to which the application of the compliance schedule in paragraphs (d)(2), (3), (5), (6), (8), and (10) of this section fails to satisfy the requirements of § 51.15 (b) and (c) of this chapter.

[37 FR 19815, Sept. 22, 1972]

EDITORIAL NOTE: For FEDERAL REGISTER citations affecting § 52.1677, see the List of CFR Sections Affected in the Finding Aids section of this volume.

§ 52.1678 Control strategy and regulations: Particulate matter.

(a)–(c) [Reserved]

(d) Section 227.3(a)(2) of 6 NYCRR, as submitted on August 10, 1979, is disapproved because it is inconsistent with 40 CFR Subpart G, Control strategy: Sulfur oxides and particulate matter.

[46 FR 55693, Nov. 12, 1981, as amended at 51 FR 40676, Nov. 7, 1986]

§ 52.1679 EPA-approved New York State regulations.

New York State regulation	State effective date	Latest EPA approval date	Comments
Part 200, General Provisions	1/16/92	7/27/93, 58 FR 40059	Redesignation of non-attainment areas to attainment areas (200.1(II)) does not relieve a source from compliance with previously applicable requirements as per letter of Nov. 13, 1981 from H. Hovey, NYSDEC.
Part 201, Permits and Certificates	5/10/84	7/19/85, 50 FR 29382	
Part 202, Emissions Testing, Sampling, and Analytical Determinations.	3/24/79	.....do	
Part 204, Hydrocarbon Emissions from Storage and Loading Facilities—New York City Metropolitan Area.	8/12/72	9/22/72, 37 FR 19814	
Part 205, Architectural Surface Coatings	9/15/88	8/4/94, 59 FR 39686	Until EPA approves State adopted coating test method, EPA will use 40 CFR part 60, App. B, Method 24.
Part 207, Control Measures for an Air Pollution Episode.	3/24/79	11/12/81, 46 FR 55690	
Part 211, General Prohibitions	8/11/83	1/26/84, 49 FR 3439	
Part 212, Processes & Exhaust and/or Ventilation Systems.	5/10/84	7/19/85, 50 FR 29382	
Part 213, Contaminant Emissions from Ferrous Jobbing Foundries.	6/27/72	9/22/72, 37 FR 19814	

New York State regulation	State effective date	Latest EPA approval date	Comments
Part 214, By-Product Coke Oven Batteries	5/23/84	3/26/91, 56 FR 12452	Variances from otherwise applicable allowable emission rates adopted pursuant to §§ 214.10 (a), (b), or (c) become applicable only if approved by EPA as SIP revisions.
Part 216, Iron and/or Steel Processes	5/23/84	.....do	
Part 217, Emissions from Motor Vehicles Propelled by Gasoline Engines.	1/29/86	11/7/86, 51 FR 40414	
Part 218, Emission Standards for Motor Vehicles and Motor Vehicle Engines.	5/28/92	1/6/95, 60 FR 2025	
Part 219, Incinerators	5/1/82	9/22/72, 37 FR 19814	
Part 220, Portland Cement Plants	3/14/73	11/12/81, 46 FR 55690	
Part 222, Incinerators—New York City, Nassau and Westchester Counties.	7/17/72	9/22/72, 37 FR 19814	
Part 223, Petroleum Refineries	8/9/84	7/19/85, 50 FR 29382	
Part 224, Sulfuric and Nitric Acid Plants	5/10/84	.....do....	Variances adopted by the State pursuant to Part 224.6(b) become applicable only if approved by EPA as SIP revisions 7/19/85, 50 FR 29382.
Subpart 225–1, Fuel Composition and Use-Sulfur Limitations.	3/24/79	11/12/81, 46 FR 55690	Section 225.3(e) is disapproved (40 CFR 52.1675(d)). Variances adopted by the State pursuant to §§ 225.2(b) and (c), 225.3, and 225.5(c) become applicable only if approved by EPA or SIP revisions (40 CFR 52.1675(e)).
Subpart 225–2, Fuel Composition and Use-Waste Fuel.	7/28/83	8/2/84	
Subpart 225–3, Fuel Composition and Use—Volatile Motor Fuels.	1/4/89	6/21/89, 54 FR 26041	Effective date 6/30/89.
Part 226, Solvent Metal Cleaning	8/23/79	11/10/80, 45 FR 74472	
Part 227, Stationary Combustion Installations (except as noted).	3/24/79	11/12/81, 46 FR 55690	Sections 227.3(a)(2), 227.5(b), 227.6(a) and 227.6(f) are disapproved (40 CFR 52.1676(b), 52.1678(d), and 52.1680(a)).
Part 227, Stationary Combustion Installations/section 227.2(b)(1).	5/1/72	9/22/72, 37 FR 19814	
Part 228, Surface Coating Processes:			
228.1, Applicability and Compliance	8/23/79	11/10/80, 45 FR 74472	Group I CTG sources are subject to final compliance dates as they appear in Section 228.1, effective Aug. 23, 1979.
228.1–228.8	8/11/83	1/26/84, 49 FR 3439	Variances adopted by the State pursuant to Section 228.3(d) become applicable only if approved by EPA as SIP revisions.

New York State regulation	State effective date	Latest EPA approval date	Comments
228.1–228.10	9/15/88	7/27/93, 58 FR 40065	Variances adopted by the State pursuant to Section 228.3(e) become applicable only if approved by EPA as SIP revisions. A test method authorized or approved under Section 228.5(c) shall be effective only on EPA approval. EPA has disapproved exemption 228.7(a)(2)(v) and clear coat emission limit for metal furniture coating lines in 228.8 table 1.
Part 229, Petroleum Liquid Storage Facilities	4/11/85	3/7/89, 54 FR 9437	Variances adopted by the State pursuant to Section 229.10 become applicable only if approved by EPA as SIP revisions.
Part 230, Gasoline Dispensing Sites and Transport Vehicles.	3/2/88	11/28/89, 54 FR 48888	
Part 231, Major Facilities	6/21/80	.....do	
Part 232, Dry Cleaning	8/11/83	6/17/85, 50 FR 25079	EPA has not determined that § 232.3(a) provides for reasonably available control technology.
Part 233, Pharmaceutical Manufacturing Processes.	5/10/81	1/26/84, 49 FR 3439	
Part 234, Graphic Arts	4/7/83	1/26/84, 49 FR 3439	Variances adopted by the State pursuant to Section 234.3(c) become applicable only if approved by EPA as SIP revisions.
Part 234, Graphic Arts	9/15/88	7/27/93, 58 FR 40065	Variances adopted by the State pursuant to Section 234.3(d) become applicable only if approved by EPA as SIP revisions.
Part 236, Synthetic Organic Chemical Manufacturing Facility Component Leaks.	1/16/92	7/27/93, 58 FR 40059	Variances adopted by the State pursuant to Part 236.6(e)(3) become applicable only if approved by EPA as a SIP revision.

[46 FR 55692, Nov. 12, 1981, as amended at 46 FR 62064, Dec. 22, 1981; 49 FR 3439, Jan. 26, 1984; 49 FR 30939, Aug. 2, 1984; 50 FR 25079, June 17, 1985; 50 FR 29382, July 19, 1985; 51 FR 40420, Nov. 7, 1986; 54 FR 9436, Mar. 7, 1989; 54 FR 26041, June 21, 1989; 54 FR 48889, Nov. 28, 1989; 56 FR 12454, Mar. 26, 1991; 58 FR 40059, 40065, July 27, 1993; 59 FR 38986, Aug. 4, 1994; 60 FR 2025, Jan. 6, 1995]

§52.1680 Control strategy: Monitoring and reporting.

(a) Section 227.6 (a) and (f) are disapproved because they are not consistent with the continuous monitoring and reporting requirements of 40 CFR 51.214.

[46 FR 55693, Nov. 12, 1981, as amended at 51 FR 40677, Nov. 7, 1986]

§52.1681 Control strategy: Lead.

As part of the attainment demonstration for lead, the State of New York has committed to rate all sources of lead or lead compound emissions with either an ''A'' or ''B'' environmental rating pursuant to 6 NYCRR Part 212.

[49 FR 30939, Aug. 2, 1984]

§52.1682 [Reserved]

§52.1683 Control strategy: Ozone.

(a) The State of New York has certified to the satisfaction of the EPA that no sources are located in the nonattainment area of the State which are covered by the following Control Techniques Guidelines:

(1) Natural Gas/Gasoline Processing Plants.

(2) Air Oxidation Processes at Synthetic Organic Chemical Manufacturing Industries.

(3) Manufacture of High-Density Polyethylene, Polypropylene, and Polystyrene Resins.

(b) EPA approves on September 20, 1991 a request by New York State to implement modified I/M audit and enforcement procedures for a two-year trial period as specified in a September 19, 1988 letter from Thomas Allen, NYSDEC, to Raymond Werner, EPA, which also provided justification for such modifications.

[56 FR 41463, Aug. 21, 1991]

§§52.1684—52.1688 [Reserved]

§52.1689 Significant deterioration of air quality.

(a) The requirements of sections 160 through 165 of the Clean Air Act are not met, since the plan does not include approvable procedures for preventing the significant deterioration of air quality.

(b) *Regulations for preventing significant deterioration of air quality*. The provisions of §52.21 (b) through (w) are hereby incorporated and made a part of the applicable state plan for the State of New York.

[43 FR 26410, June 19, 1978, as amended at 45 FR 52741, Aug. 7, 1980]

§52.1690 Small business technical and environmental compliance assistance program.

On January 11, 1993, the New York State Department of Environmental Conservation submitted a plan for the establishment and implementation of a Small Business Stationary Source Technical and Environmental Compliance Assistance Program for incorporation in the New York state implementation plan. This plan meets the requirements of section 507 of the Clean Air Act, and New York must implement the program as approved by EPA.

[59 FR 34386, July 5, 1994]

Subpart II—North Carolina

§52.1770 Identification of plan.

(a) Title of plan: ''The North Carolina State Implementation Plan for Air Quality.''

(b) The plan was officially submitted on January 27, 1972.

(c) The plan revisions listed below were submitted on the dates specified.

(1) Miscellaneous non-regulatory additions to the plan submitted on May 5, 1972, by the North Carolina Department of Natural and Economic Resources.

(2) Letter indicating procurement of additional monitors submitted on May 9, 1972, by the North Carolina Department of Natural and Economic Resources.

(3) Compliance schedules submitted on February 13, 1973, by the North Carolina Department of Natural and Economic Resources.

(4) Compliance schedules submitted on February 14, 1973, by the North Carolina Department of Natural and Economic Resources.

(5) Compliance schedules submitted on March 2, 1973, by the North Carolina Department of Natural and Economic Resources.

(6) Compliance schedules submitted on April 24, 1973, by the North Carolina Department of Natural and Economic Resources.

(7) Compliance schedules submitted on November 2, 1973, by the North Carolina Department of Natural and Economic Resources.

(8) Indirect source review regulation No. 9 submitted on November 16, 1973, by the North Carolina Department of Natural and Economic Resources.

(9) Compliance schedules submitted on November 20, 1973, by the North Carolina Department of Natural and Economic Resources.

(10) Revisions to indirect source review regulation No. 9 and AQMA identification material submitted on April 1, 1974, by the North Carolina Department of Natural and Economic Resources.

(11) Compliance schedules submitted on May 13, 1974, by the North Carolina Department of Natural and Economic Resources.

(12) Compliance schedules submitted on November 7, 1974, by the North Carolina Department of Natural and Economic Resources.

(13) AQMA identification material submitted on November 22, 1974, by the North Carolina Department of Natural and Economic Resources.

(14) Compliance schedules submitted on November 27, 1974, by the North Carolina Department of Natural and Economic Resources.

(15) Revised ambient SO_2 and NO_2 standards, submitted on March 23, 1976, by the North Carolina Department of Natural and Economic Resources.

(16) Regulations extending visible emissions standard, adopting EPA's New Source Performance Standards (40 CFR part 60) and revising emission monitoring of stationary sources (40 CFR part 51.19), submitted June 24, 1976, by North Carolina Departmentof Natural and Economic Resources.

(17) Letter requesting delegation of Federal authority for the administrative and technical portions of the prevention of significant deterioration program, submitted on June 24, 1976, by the Secretary of the North Carolina Department of Natural andEconomic Resources.

(18) Miscellaneous plan revisions, submitted on November 1, 1976, by the North Carolina Department of Natural and Economic Resources.

(19) Regulations governing emissions of sulfur dioxide from the roasting of spodumene ore, submitted on February 14, 1978, by the North Carolina Department of Natural Resources and Community Development.

(20) Request for an 18-month extension of the statutory timetable for submitting a plan to attain and maintain the secondary ambient standard for particulate matter in the Spruce Pine nonattainment area, submitted on February 1, 1979, by the North Carolina Department of Natural Resources and Community Development.

(21) 1979 implementation plan revisions for the Mecklenburg County ozone and carbon monoxide nonattainment areas, including regulations 2D.0901–.0931 and 2H.0608, adopted on June 14, 1979, and submitted on June 15 and July 25, 1979, by the North Carolina Department of Natural Resources and Community Development.

(22) Three-year variance for the coal-fired units of Duke Power Company and Carolina Power & Light Company from the particulate emission limits of Regulation 15 N.C.A.C. 2D.0503, with submittals on June 18, September 7, October 31, and December 14, 1979, by the North Carolina Department of Natural Resources and Community Development.

(23) Revised regulations 2D.0903 and 2D.0931, adopted on April 10, 1980, and submitted on May 2, 1980, by the North Carolina Department of Natural Resources and Community Development to correct deficiencies in the Part D ozone revisions given conditional approval on April 17, 1980.

(24) Corrections in Part D carbon monoxide revisions conditionally approved on April 17, 1980, submitted on May 22 (this submittal included Regulation 2H.0608(g)), July 1, and August 19, 1980, by the North Carolina Department of Natural Resources and Community Development.

(25) Miscellaneous revisions submitted on June 15, 1979 (provisions for interstate pollution abatement to satisfy section 126(a) of the Clean Air Act, and revised ambient standard for

ozone), and on May 2, 1980 (revision of regulations 2D.0302, .0501, .0524, .0525, and .0603, addition of regulation 2H.0603(f), ambient standard for airborne lead, and provision for public participation to satisfy section 127(a) of the Clean Air Act), by the North Carolina Department of Natural Resources and CommunityDevelopment.

(26) Revisions of Section VI, Air Quality Surveillance, of the plan, submitted on August 19, 1980, by the North Carolina Department of Natural Resources and Community Development.

(27) Opacity limits for existing kraft pulp mill recovery furnaces (regulation 2D .0508(b)) and revised opacity limitations for other sources (revised regulation 2D .0521), submitted on March 22, 1977, and on April 19, 1978, by the North Carolina Department of Natural Resources and Community Development.

(28) Revisions in VOC regulations 2D.0902, .0903, .0905, .0907–.0912, and new VOC regulations 2D.0932–.0942, submitted on June 23, 1980, and revised regulation 2D.0936, submitted on April 29, 1981, by the North Carolina Department of Natural Resources and Community Development.

(29) Implementation plan for lead, submitted on May 2, 1980, by the North Carolina Department of Natural Resources and Community Development.

(30) Regulation 2D.0530, providing for prevention of significant deterioration, submitted on April 16, 1981, by the North Carolina Department of Natural Resources and Community Development.

(31) Addition of regulations 2D.0531 and 2D.0532 to replace repealed regulation 2H.0608, regulations providing for alternative emission reduction options, revised permit regulations (no action is taken on the addition of subdivision (h) to regulation 2H.0603), and miscellaneous other regulation changes, submitted on April 16, 1981, and relaxed annual ambient standard for particulate matter, submitted on September 14, 1981, by the North Carolina Department of Natural Resources and Community Development.

(32) Revised SO_2 limit for all but 24 (see FR of December 7, 1982) fuel-burning sources (changes in regulations 2D.0511 and .0516), submitted on March 22, 1977, and January 11, 1982, by the North Carolina Department of Natural Resources and Community Development.

(33) Permit restricting emissions of SO_2 from the Cliffside Steam Plant of Duke Power Company to 2.2 # per million Btu, submitted on September 24, 1982, by the North Carolina Department of Natural Resources and Community Development.

(34) Revised SO_2 limit for eight fuel-burning sources (See FR of February 10, 1983), submitted on March 22, 1977, and January 11, July 27, and August 26, 1982, by the North Carolina Department of Natural Resources and Community Development.

(35) Changes in regulations 2D.0524 and .0603, submitted on September 24, 1982, by the North Carolina Department of Natural Resources and Community Development.

(36) Bubble permit for E. I. du Pont de Nemours and Company, Kinston, submitted on May 18, 1983, by the North Carolina Department of Natural Resources and Community Development.

(37) 1982 revision of the Part D plan for the Mecklenburg County CO nonattainment area, submitted on June 17, 1982, and April 17, 1984, by the North Carolina Department of Natural Resources and Community Development.

(38) Revisions to the North Carolina Administrative Code were submitted to EPA on January 24, 1983.

(i) Incorporation by reference. (A) Letter of January 24, 1983 from the North Carolina Department of Natural Resources and Community Development, and the following North Carolina Administrative Code Regulations which were adopted by the Environmental Management Commission on December 9, 1982:

15 NCAC 2D.0501, Compliance With Emission Control Standards
15 NCAC 2D.0503, Control of Particulates from Fuel Burning Sources
15 NCAC 2D.0504, Particulates from Wood Burning Indirect Heat Exchangers
15 NCAC 2D.0530, Prevention of Significant Deterioration
15 NCAC 2D.0531, Sources in Nonattainment Areas
15 NCAC 2D.0532, Sources Contributing to an Ambient Violation
15 NCAC 2D.0606, Other Coal or Residual Oil Burners

15 NCAC 2D.0902, Applicability (Volatile Organic Compounds)
15 NCAC 2H.0603, Applications (Air Quality Permits)

(39) Revisions to the North Carolina Administrative Code were submitted to EPA on April 17, 1984.

(i) Incorporation by reference. (A) Letter of April 17, 1984 from the North Carolina Department of Natural Resources and Community Development, and the following North Carolina Administrative Code Regulations which were adopted by the Environmental Management Commission on April 12, 1984:

15 NCAC 2D.0101, Definitions and References
15 NCAC 2D.0103, Copies of Referenced Federal Regulations
15 NCAC 2D.0201, Classification of Air Pollution Sources
15 NCAC 2D.0202, Registration of Air Pollution Sources
15 NCAC 2D.0302, Episode Criteria
15 NCAC 2D.0303, Emission Reduction Plans
15 NCAC 2D.0304, Preplanned Abatement Program
15 NCAC 2D.0305, Emission Reduction Plan—Alert Level
15 NCAC 2D.0306, Emission Reduction Plan—Warning Level
15 NCAC 2D.0307, Emission Reduction Plan—Emergency Level
15 NCAC 2D.0401, Purpose (Ambient Air Quality Standards)
15 NCAC 2D.0402, Sulfur Oxides
15 NCAC 2D.0403, Suspended Particulates
15 NCAC 2D.0404, Carbon Monoxide
15 NCAC 2D.0405, Ozone
15 NCAC 2D.0407, Nitrogen Dioxide
15 NCAC 2D.0408, Lead
15 NCAC 2D.0501, Compliance With Emission Control Standards
15 NCAC 2D.0524, New Source Performance Standards
15 NCAC 2D.0601, Purpose and Scope (Monitoring, Reporting)
15 NCAC 2D.0602, Definitions
15 NCAC 2D.0604, Sources Covered by Implementation Plan Requirements
15 NCAC 2D.0605, Wood and Wood—Fossil Fuel Combination Units
15 NCAC 2D.0606, Other Coal or Residual Oil Burners
15 NCAC 2D.0607, Exceptions to Monitoring and Reporting Requirements
15 NCAC 2D.0608, Program Schedule
15 NCAC 2D.0610, Delegation
15 NCAC 2D.0801, Purpose and Scope (Complex Sources)
15 NCAC 2D.0802, Permits
15 NCAC 2D.0803, Highway Projects
15 NCAC 2D.0804, Airport Facilities
15 NCAC 2H.0601, Purpose and Scope (Air Quality Permits)
15 NCAC 2H.0602, Definitions
15 NCAC 2H.0604, Final Action on Permit Applications
15 NCAC 2H.0605, Issuance, Revocation and Enforcement of Permits
15 NCAC 2H.0606, Delegation of Authority
15 NCAC 2H.0607, Copies of Referenced Documents

(ii) Additional material. (A) The following regulations were repealed by the Environmental Management Commission on April 12, 1984:

15 NCAC 2D.0102, Phrases
15 NCAC 2D.0406, Hydrocarbons
15 NCAC 2D.0603, Sources Covered by National Standards

(40) Visibility Impairment Prevention Program and visibility new source review regulations were submitted to EPA on April 15, 1985.

(i) Incorporation by reference.

(A) Letter of April 15, 1985, from the North Carolina Department of Natural Resources and Community Development, and the following North Carolina Administrative Code revisions which were adopted by the Environmental Management Commission on April 11, 1985: 15 NCAC 2D.0530, Prevention of Significant Deterioration 15 NCAC 2D.0531, Sources in Nonattainment Areas.

(ii) Additional material.

(A) Narrative submittal, titled ''Visibility Impairment Prevention Program for Federal Class I Areas,'' adopted by the Environmental Management Commission on April 11, 1985.

(41) [Reserved]

(42) A new regulation covering malfunctions, (2D.0535 (a)—(f)), and the repeal of a malfunction rule for VOC sources (2D.0904) which were submitted to EPA on January 24, 1983. (2D.0535(g) covering startups and shutdowns as submitted on April 17, 1984, is disapproved.)

(i) Incorporation by reference.

(A) New malfunction regulation 15 NCAC 2D.0535 paragraphs (a)–(f), as adopted by the Environmental Management Commission on December 9, 1982.

(ii) Additional material.

(A) Letter from Robert F. Helms, Director, Division of Environmental Management, dated January 24, 1983.

(43) Revisions to the North Carolina Administrative Code were submitted to EPA on March 18, 1985.

(i) Incorporation by reference.

(A) Changes in the following regulations were adopted by the Environmental Management Commission on March 14, 1985:

15 NCAC 2D.0606, Other Coal or Residual Oil Burners
15 NCAC 2D.0939, Determination of Volatile Organic Compound Emissions

(B) The following new regulations were adopted by the Environmental Management Commission on March 14, 1985:

15 NCAC 2D.0943, Synthetic Organic Chemical and Polymer Manufacturing
15 NCAC 2D.0944, Manufacturing of Polyethylene, Polypropylene, and Polystyrene
15 NCAC 2D.0945, Petroleum Dry Cleaning

(ii) Other material—none.

(44) Revisions to the North Carolina Administrative Code were submitted to EPA on April 15, 1985.

(i) Incorporation by reference.

(A) Changes in the following regulations were adopted by the Environmental Management Commission on April 11, 1985:

15 NCAC 2D.0202, Registration of Air Pollution Sources
15 NCAC 2D.0501, Compliance with Emission Control Standards (except the changes to paragraph (f)(1)(A))
15 NCAC 2D.0503, Control of Particulates from Fuel Burning Indirect Heat Exchangers
15 NCAC 2D.0504, Particulates from Wood Burning Indirect Heat Exchangers
15 NCAC 2D.0505, Control of Particulates from Incinerators
15 NCAC 2H.0603, (Permit) Applications

(ii) Other material—none.

(45) SO_2 revisions for Alba Waldensian and Valdese Manufacturing which were submitted by the North Carolina Department of Natural Resources and Community Development on April 2, 1986.

(i) Incorporation by reference. (A) Letter of April 2, 1986, from the North Carolina Department of Natural Resources and Community Development.

(B) Permits for Alba Waldensian (2 plants) and Valdese Manufacturing which were issued by the Environmental Management Commission on July 23, 1986, March 11, 1987, and August 1, 1985, respectively.

(ii) Additional material—none.

(46) SO_2 and particulate revision for Appalachian State University which was submitted by the North Carolina Department of Natural Resources and Community Development on July 26, 1985, and June 7, 1988.

(i) Incorporation by reference.

(A) Letters of July 26, 1985 and June 7, 1988 from the North Carolina Department of Natural Resources and Community Development.

(B) Permit for Appalachian State University (No. 3990R4) which was issued by the Environnental Management Commission on July 19, 1985, and amended on June 7, 1988.

(ii) Additional material—none.

(47) Revisions to Title 15 of the North Carolina Administrative Code (15 NCAC) which were submitted to EPA on December 17, 1984.

(i) Incorporation by reference.

(A) Letter of December 17, 1984, from the North Carolina Division of Environmental Management and amendments to the following regulations which were adopted by the North Carolina Environmental Management Commission on November 8, 1984:

2D.0501—Compliance with Emission Control Standards
2D.0506—Control of Particulates from Hot Mix Asphalt Plants
2D.0507—Particulates from Chemical Fertilizer Manufacturing Plants
2D.0508—Control of Particulates from Pulp and Paper Mills
2D.0509—Particulates from Mica or Feldspar Processing Plants
2D.0510—Particulates: Sand, Gravel, Crushed Stone Operations
2D.0511—Particulates, SO_2 from Lightweight Aggregate Processes
2D.0512—Particulates from Wood Products Finishing Plants
2D.0513—Control of Particulates from Portland Cement Plants
2D.0514—Control of Particulates from Ferrous Jobbing Foundries
2D.0515—Particulates from Miscellaneous Industrial Processes
2D.0516—Sulfur Dioxide Emissions from Fuel-Burning Installations
2D.0517—Emissions from Plants Producing Sulfuric Acid (Except revision to paragraph 2)
2D.0519—Control of Nitrogen Dioxide Emissions

2D.0520—Control and Prohibition of Open Burning
2D.0521—Control of Visible Emissions
2D.0527—Emissions from Spodumene Ore Roasting (Except revision to paragraph 2)
2D.0530—Prevention of Significant Deterioration
2D.0531—Sources in Nonattainment Areas
2D.0532—Sources Contributing to an Ambient Violation
2D.0901—Definitions (Volatile Organic Compounds)
2D.0903—Recordkeeping, Reporting, Monitoring (Volatile Organic Compounds)
2D.0905—Petition for Alternative Controls
2D.0906—Circumvention
2D.0907—Equipment Installation Compliance Schedules
2D.0908—Equipment Modification Compliance Schedules
2D.0909—Low Solvent Content Coating Compliance Schedules
2D.0910—Alternate Compliance Schedules
2D.0912—General Provisions on Test Methods and Procedures
2D.0913—Determination of Volatile Content of Surface Coating
2D.0914—Determination of VOC Emission Control System Efficiency
2D.0915—Determination of Solvent Metal Cleaning VOC Emissions
2D.0916—Determination of VOC Emissions from Bulk Gasoline Terminals
2D.0918—Can Coating
2D.0919—Coil Coating
2D.0920—Paper Coating
2D.0921—Fabric and Vinyl Coating
2D.0922—Metal Furniture Coating
2D.0923—Surface Coating of Large Appliances
2D.0924—Magnet Wire Coating
2D.0925—Petroleum Liquid Storage In Fixed Roof Tanks
2D.0926—Bulk Gasoline Plants
2D.0927—Bulk Gasoline Terminals
2D.0928—Gasoline Service Stations Stage I
2D.0929—Petroleum Refinery Sources
2D.0930—Solvent Metal Cleaning
2D.0931—Cutback Asphalt
2D.0932—Gasoline Truck Tanks and Vapor Collection Systems
2D.0933—Petroleum Liquid Storage In External Floating Roof Tanks
2D.0934—Coating of Miscellaneous Metal Parts and Products
2D.0935—Factory Surface Coating of Flat Wood Paneling
2D.0936—Graphic Arts
2D.0937—Manufacture of Pneumatic Rubber Tires
2D.0938—Perchloroethylene Dry Cleaning System
2D.0939—Determination of Volatile Organic Compound Emissions
2D.0940—Determination of Leak Tightness and Vapor Leaks
2H.0601—Purpose and Scope (Permits)
2H.0604—Final Action on Permit Applications
2H.0605—Issuance, Revocation and Enforcement of Permits

(ii) Additional material.

(A) Regulation 2D.0609 (Monitoring Condition in Permit) was repealed by the Environmental Management Commission on November 8, 1984.

(48) Revision to the North Carolina Administrative Code (15 NCAC) which was submitted to EPA on February 25, 1986.

(i) Incorporation by reference.

(A) Letter of February 25, 1986, from the North Carolina Division of Environmental Management and the amendment to regulation 2D.0917 (Automobiles and Light-Duty Truck Manufacturing) which was adopted by the North Carolina Environmental Management Commission on February 13, 1986.

(ii) Additional material—none.

(49) Revision to 15 NCAC 2D.0518 which was submitted by the North Carolina Division of Environmental Management on January 24, 1983.

(i) Incorporation by reference.

(A) Letter of January 24, 1983 to EPA from the North Carolina Department of Natural Resources and Community Development, and amendments to North Carolina Administrative Code regulation 2D.0518 (Miscellaneous Volatile Organic Compound Emissions) adopted by the Environmental Management Commission on December 9, 1982, which allow alternative control strategies.

(ii) Additional material—none.

(50) Stack Height regulations were submitted to EPA on September 24, 1982, April 17, 1984, and February 25, 1986, by the North Carolina Department of Natural Resources and Community Development.

(i) Incorporation by reference. (A) Regulations 15NCAC 2D.0533 (Stack Height) adopted on September 9, 1982 and Regulations 15NCAC 2H.0603 (Applications) adopted on February 13, 1986 and April 12, 1984, by the Environmental Management Commission.

(ii) Other material—none.

(51) Revisions to the North Carolina State Implementation Plan were submitted by the State of North Carolina Division of Environmental Management on June 12, 1986.

(i) Incorporation by reference.

(A) A new regulation entitled Control of Conical Incinerators, 15 NCAC 2D.0523, which became effective on January 1, 1985.

(B) A letter dated July 7, 1987, from the State of North Carolina Division of Environmental Management clarifying the adoption and effective dates of 15 NCAC 2D.0523.

(ii) Other material—none.

(52) Minor revisions to Title 15 of the North Carolina Administrative Code (15 NCAC) were submitted to EPA on February 25, 1986.

(i) Incorporation by reference.

(A) Letter of February 25, 1986 from the State of North Carolina to EPA, and Amendments in the following regulations which were adopted by the North Carolina Environmental Management Commission on February 13, 1986:

2D.0501 Compliance with Emission Control Standards
2D.0508 Control of Particulates from Pulp and Paper Mills
2D.0509 Particulates from Mica and Feldspar Processing Plants
2D.0514 Control of Particulates from Ferrous Jobbing Foundries
2D.0535 Malfunctions, Startup and Shutdown
2D.0916 Determination: VOC Emissions from Bulk Gasoline Terminals

(ii) Other material—none.

(53) Revisions to 15 NCAC, regulation 2D.0501 were submitted to EPA on October 14, 1986.

(i) Incorporation by reference.

(A) Letter of October 14, 1986, from the North Carolina Department of Natural Resources and Community Development, and revisions to 15 NCAC, regulation 2D.0501 which were adopted by the Environmental Management Commission on September 11, 1986.

(ii) Additional material—none.

(54) Revisions to the visible emission regulations of Title 15 of the North Carolina Administrative Code (15 NCAC) were submitted February 11, 1987.

(i) Incorporation by reference.

(A) Letter to EPA dated February 11, 1987 and amendments to the following North Carolina Administrative Code regulations:

15 NCAC 2D.0501(c)(8), Compliance with Emission Control Standards;
15 NCAC 2D.0508(b), Control of Emissions from Pulp and Paper Mills; and
15 NCAC 2D.0521 (c), (d), and (f), Control of Visible Emissions, which became effective on August 1, 1987.

(ii) Additional material—none.

(55) A revised regulation limiting emissions from electric utility boilers was submitted on January 24, 1983, and February 21, 1983, and amended by submittals dated December 17, 1985, and June 19, 1987, by the North Carolina Department of Natural Resources and Community Development. Only the following portions of this regulation are approved:

(i) Incorporation by reference.

(A) Only those portions of a new regulation, 15 NCAC 2D.0536, entitled ''Emissions from Electric Utility Boilers,'' which were approved by the Environmental Protection Agency on April 5, 1988.

(ii) Other material—none.

(56) Revisions to miscellaneous regulations of Title 15 of the North Carolina Administrative Code (15 NCAC) were submitted April 14, 1987.

(i) Incorporation by reference.

(A) Amendments to the following regulations (15 NCAC) were adopted by the North Carolina Environmental Management Commission on April 9, 1987:

2D.0103—Copies of Referenced Federal Regulations, paragraph (a)(2).
2D.0501—Compliance with Emission Control Standards, paragraph (c)(4).
2D.0505—Control of Particulates from Incinerators, paragraph (b).
2D.0533—Stack Height, paragraph (a)(7).
2H.0607—Copies of Referenced Documents, (a) introductory text and paragraph (a)(2).

(B) Letter of April 14, 1987, to EPA from the State of North Carolina Department of Natural Resources and Community Development.

(ii) Other material—none.

(57) Revisions to 15 NCAC 2D.0501(c)(4) were submitted by the North Carolina Department of Natural Resources and Community Development on December 15, 1987.

(i) Incorporation by reference.

(A) Letter of December 15, 1987, to the Environmental Protection Agency from the North Carolina Department of Natural Resources and Community Development and revised paragraph (c)(4) of 15 NCAC 2D.0501, adopted by the

North Carolina Environmental Management Commission on December 10, 1987.

(ii) Additional material—none.

(58) North Carolina plan for visibility impairment prevention for federal Class I areas, Part 2, submitted to EPA on December 15, 1987, by the North Carolina Division of Environmental Management (NCDEM) to satisfy the Part 2 visibility requirements including the State's long-term strategy and provisions to satisfy the periodic review requirements.

(i) Incorporation by reference.

(A) December 15, 1987, letter from the North Carolina Division of Environmental Management.

(B) That portion of page II–7 of the North Carolina plan for visibility impairment prevention for federal Class I areas Part 2 containing the periodic review requirements satisfying 40 CFR 51.306(c), adopted by the North Carolina Division of Environmental Management on December 10, 1987.

(ii) Additional material.

(A) Narrative SIP titled ''The North Carolina Plan for Visibility Impairment Prevention for Federal Class I Areas Part 2.''

(59) [Reserved]

(60) Revisions to 15 NCAC 2D.0103, Copies of Referenced Federal Regulations; 2D.0304, Preplanned Abatement Program; 2D.0604, Sources Covered by Implementation Plan Requirements; 2D.0606, Other Coal or Residual Oil Burners; 2D.0608, Program Schedule; and 2H.0607, Copies of Referenced Documents, were submitted by the North Carolina Department of Natural Resources and Community Development on May 2, 1988.

(i) Incorporation by reference.

(A) Letter of May 2, 1988 from the North Carolina Department of Natural Resources and Community Development and revised regulations 15 NCAC 2D.0103(a)(6), 2D.0304(a), 2D.0604(b), 2D.0606(a)(4)(E), 2D.0608(b), and 2H.0607(a)(6), adopted by the North Carolina Environmental Management Commission on April 14, 1988.

(ii) Additional material—none.

(61) Revisions to the SIP including PM_{10} revisions submitted on May 2, 1988, and July 14, 1989 by the North Carolina Department of National Resources and Community Development.

(i) Incorporation by reference. (A) July 1, 1988 revisions to North Carolina Administration Code Regulation No.:

2D.0101—Definitions, (18) and (25)–(33)
2D.0302—Episode criteria, (2)(g), (3)(g), (4) (f) and (g)
2D.0403—Total suspended particulates
2D.0409—Particulate matter
2D.0501—Compliance with emission control standards, (c)(16)
2D.0913—Determination of volatile content of surface coatings
2D.0916—Determination of VOC emissions from bulk gasoline terminals
2D.0939—Determination of volatile organic compound emissions
2D.0940—Determination of leak tightness and vapor leaks
2D.0601—Purpose and scope
2D.0603—Applications, (f) (5) and (6)

(B) October 1, 1989 State-effective revisions to North Carolina Administration Code No.:

2D.0104—Adoption by Reference Updates
2D.0530—Prevention of Significant Deterioration, (h)
2D.0531—Sources in Non-Attainment Areas, (d)
2D.0532—Sources Contributing to an Ambient Violation, (d)

(ii) Additional material. (A) May 2, 1988 letter from North Carolina Department of Natural Resources and Community Development.

(B) July 14, 1989 letter from North Carolina Department of Natural Resources and Community Development

(62) Permits for Liggett & Myers and Burlington Industries which were submitted as State Implementation Plant revisions on April 2, 1986, and resubmitted on October 24, 1989.

(i) Incorporation by reference.

(A) Permit No. 2533R11 for Liggett & Myers Tobacco Company issued on May 22, 1989.

(B) Permit No. 4119R5 for Burlington Industries issued on March 3, 1987.

(ii) Additional material—none.

(63) Miscellaneous revisions to the North Carolina State Implementation Plan which were submitted on July 14, 1989.

(i) Incorporation by reference.

(A) Revisions to North Carolina Administrative Code which became State effective on October 1, 1989 are as follows:

2D.0401, Purpose, as amended
2D.0404, Carbon Monoxide, as amended
2D.0407, Nitrogen Dioxide, as amended
2D.0501, Compliance with Emission Control Standards, (c)(3)
2D.0511, Particulates from Lightweight Aggregate Processes, (d)
2D.0516, Sulfur Dioxide Emissions from Combustion Sources, (a)
2D.0519, Control of Nitrogen Dioxide and Nitrogen Oxides Emissions, as amended
2H.0601, Purpose and Scope, (a), (c), and (d)
2H.0603, Applications, (d) and (e)
2H.0606, Delegation of Authority, as amended

(ii) Additional material.

(A) Letter of July 14, 1989 submitting the SIP revisions.

(64) Revisions to the North Carolina State Implementation Plan which were submitted on July 15, 1987 and May 25, 1988.

(i) Incorporation by reference.

(A) Revisions to North Carolina Administrative Code effective as of July 1, 1988, are as follows:

2D.0530, Prevention Of Significant Deterioration, except (h).
2D.0531, Sources In Nonattainment Areas, except (d).
2D.0532, Sources Contributing To An Ambient Violation, except (d).

(ii) Additional information—none.

(65) Revisions to the North Carolina SIP which include the Forsyth County, Western North Carolina and Mecklenburg County regulations which were submitted on June 14, 1990.

(i) Incorporation by reference.

(A) The entire set of Forsyth County Air Quality Control Code regulations effective December 19, 1988, except for section 3–152(2), 3–155, 3–158, 3–159, 3–160 and 3–169.

(B) The entire set of Western North Carolina regulations effective March 13, 1985 and November 9, 1988, except for Sections 1–137(g), 1–139, 1–144, 1–152(2), 1–158 and 1–159.

(C) The entire set of Mecklenburg County regulations effective April 3, 1989, except for Sections 2.0517(2), 2.0524, 2.0525, 2.0528, 2.0529, 2.0534, 2.0537.

(ii) Additional material—none.

(66) The maintenance plan and emission inventory for Greensboro/Winston-Salem/Highpoint Area which includes Davidson County, Davis County (part) the area bounded by the Yadkin River, Dutchmans Creek, North Carolina Highway 801, Fulton Creek, and back to the Yadkin River, Forsyth County and Guilford County, submitted by the North Carolina Department of Environment, Health, and Natural Resources on November 13, 1992, and June 1, 1993, as part of the North Carolina SIP.

(i) Incorporation by reference.

(A) Supplement to the Redesignation Demonstration and Maintenance Plan For Raleigh/Durham and Greensboro/Winston-Salem/High Point Ozone Attainment Areas submitted June 1, 1993, and Prepared by the North Carolina Department of Environment, Health, and Natural Resources, Division of Environmental Management, Air Quality Section. The effective date is July 8, 1993.

(*1*) Section 2— Discussion of Attainment.

(*2*) Section 3—Maintenance Plan.

(*3*) Greensboro/Winston-Salem/High Point Nonattainment Area Emission Summary for 1990.

(*4*) Greensboro/Winston-Salem/High Point Nonattainment Area Emission Summary for 1993.

(*5*) Greensboro/Winston-Salem/High Point Nonattainment Area Emission Summary for 1996.

(*6*) Greensboro/Winston-Salem/High Point Nonattainment Area Emission Summary for 1999.

(*7*) Greensboro/Winston-Salem/High Point Nonattainment Area Emission Summary for 2002.

(*8*) Greensboro/Winston-Salem/High Point Nonattainment Area Emission Summary for 2004.

(ii) Other material. None

(67) The maintenance plan and emission inventory for the Raleigh/Durham Area which includes Durham County, Wake County, and the Dutchville Township portion of Granville County submitted by the North Carolina Department of Environment, Health, and Natural Resources on November 13, 1992, and June 1, 1993, as part of the North Carolina SIP.

(i) Incorporation by reference.

(A) Supplement to the Redesignation Demonstration and Maintenance Plan for the Greensboro/Winston-Salem/High Point and Raleigh/Durham Ozone Attainment Areas submitted June 1, 1993, and Prepared by the North Carolina Department of Environment, Health, and Natural Resources, Division of Environmental Management, Air Quality

Section. The effective date is July 8, 1993.

(*1*) Section 2—Discussion of Attainment.

(*2*) Section 3—Maintenance Plan.

(*3*) Raleigh/Durham Nonattainment Area Emission Summary for 1990.

(*4*) Raleigh/Durham Nonattainment Area Emission Summary for 1993.

(*5*) Raleigh/Durham Nonattainment Area Emission Summary for 1996.

(*6*) Raleigh/Durham Nonattainment Area Emission Summary for 1999.

(*7*) Raleigh/Durham Nonattainment Area Emission Summary for 2002.

(*8*) Raleigh/Durham Nonattainment Area Emission Summary for 2004.

(ii) Other material. None.

(68) The North Carolina Department of Environmental Management submitted an Oxygenated Fuel program as part of North Carolina carbon monoxide SIP on November 20, 1992.

(i) Incorporation by reference.

(A) The North Carolina Environmental Commission regulations 15A NCAC 2D.1301 through .1305 effective September 1, 1992.

(B) The North Carolina Gasoline and Oil Board section .0800 through .0806 effective September 1, 1992.

(ii) Other material. None.

(69) Revisions to the VOC portion of the North Carolina SIP to correct deficiencies submitted on September 21, 1989, January 14, 1991, and April 29, 1991, and July 19, 1993, revisions to VOC regulations of the Mecklenburg County Department of Environmental Protection submitted on August 13, 1991.

(i) Incorporation by reference.

(A) Amendments to the North Carolina regulations 15 NCAC 2D.0101, .0531, .0901 except (12) and (28), .0913(b), .0917 except (d), .0918 except (d), .0919 except (d), .0920 except (e), .0921 except (d), .0922 except (d), .0923 except (e), .0924 except (d), .0925 except (d)(1), .0926 except (g), .0927, .0928 except (e), .0929 except (d), .0930 except (e)(3) and (f)(2), .0931, .0932, .0933 except (f), .0934 except (e), .0935, .0936, .0937, .0938, .0941, and 2H.0603 effective December 1, 1989.

(B) Amendments to the North Carolina regulations 15 NCAC 2D.0901 (28), .0902(c), .0913(a), .0925(d)(1), .0926(g), .0928(e), .0929(d), .0930 (e)(3) and (f)(2), .0933(f), .0943 (a) (8) and (10) which were effective March 1, 1991.

(C) Amendments to the North Carolina regulations 15 NCAC 2D.0901(12), .0917(d), .0918(d), .0919(d), .0920(e), .0921(d), .0922(d), .0923(e), .0924(d), and .0934(e) effective on July 1, 1991.

(D) Amendments to the North Carolina regulations 15 NCAC 2D.0903 and 2D.0912 effective on July 1, 1993.

(E) Amendments to the Mecklenburg County Department of Environmental Protection regulations 2.0901, 2.0902, 2.0913, 2.0925, 2.0926, 2.0928, 2.0929, 2.0930, 2.0933, 2.0934, 2.0943, 2.0944 effective March 1, 1991.

(F) Amendments to the Mecklenburg County Department of Environmental Protection regulations 2.0903, 2.0912 effective July 1, 1991.

(ii) Other material. None.

(70) The minor source operating permit program for Mecklenburg County, North Carolina, submitted by the Mecklenburg County Department of Environmental Protection on November 24, 1993, and as part of the Mecklenburg County portion of the North Carolina SIP.

(i) Incorporation by reference.

MCAPCO Regulations 1.5211 through 1.5214, 1.5216, 1.5219, 1.5221, 1.5222, 1.5232, 1.5234, and 1.5306 of the Mecklenburg County portion of the North Carolina SIP adopted June 6, 1994.

(ii) Other material. None.

(71) The PSD NOx increment regulations and other miscellaneous revisions to the North Carolina State Implementation Plan which were submitted on March 3, 1993.

(i) Incorporation by reference.

(A) North Carolina regulations 15 NCAC 2D.0103, 2D.0104, 2D.0401, 2D.0521, 2D.0530, 2D.0531, 2D.0532, 2H.0603, 2H.0607, and 2H.0609 effective on December 1, 1992.

(ii) Other material. None.

(72) The NSR regulations to the North Carolina State Implementation Plan which were submitted on January 7, 1994.

(i) Incorporation by reference.

(A) North Carolina regulations 15A NCAC 2D.0531, and 2D.0532 effective on December 1, 1993.

(ii) Other material.

(A) Letter of January 7, 1993, from the North Carolina Division of Environmental Management.

(73) Revisions to the State of North Carolina State Implementation Plan (SIP) concerning emission statements were submitted on August 15, 1994, by the North Carolina Department of Environment, Health and Natural Resources.

(i) Incorporation by reference.

Revisions to North Carolina Regulation 15A NCAC 2Q .0207, effective July 1, 1994.

(ii) Other material. None.

(74) The minor source operating permit programs for the State of North Carolina, Western North Carolina Regional Air Pollution Control Board, and Forsyth County Department of Environmental Affairs submitted by the North Carolina Department of Environment, Health, and Natural Resources on May 31, 1994, June 1, 1994, and September 15, 1994, as part of the North Carolina SIP.

(i) Incorporation by reference.

(A) Regulations 15A NCAC 2Q.0103, 15A NCAC 2Q.0301, 15A NCAC 2Q.0303 through 15A NCAC 2Q.0311 of the North Carolina SIP as adopted by the North Carolina Environmental Management Commission on May 12, 1994 and which became effective on July 1, 1994.

(B) Regulations 15A NCAC 2Q.0103, 15A NCAC 2Q.0301, 15A NCAC 2Q.0303 through 15A NCAC 2Q.0311 of the North Carolina SIP as adopted by reference by the Western North Carolina Regional Air Pollution Control Board (WNCRAPCB) on September 12, 1994 and which were made effective September 12, 1994.

(C) Regulations Subchapter 3Q.0103, Subchapter 3Q.0301, Subchapter 3Q.0303 through Subchapter 3Q.0311 of the Forsyth County portion of the North Carolina SIP as adopted and made effective by the Forsyth County Board of Commissioners on May 23, 1994.

(ii) Other material. None.

(75) The redesignation and maintenance plan for Winston-Salem/Forsyth County submitted by the North Carolina Department of Environmental Management on April 27, 1994, as part of the North Carolina SIP. The emission inventory projections are included in the maintenance plan.

(i) Incorporation by reference.

(A) Maintenance Plan for the Forsyth County Carbon Monoxide Nonattainment Area adopted on April 14, 1994.

(ii) Other material. None.

(76) The North Carolina Department of Environment, Health and Natural Resources submitted revisions to the North Carolina State Implementation Plan on November 2, 1989. These revisions incorporate SO_2 limits and permit conditions for Texasgulf, Incorporated.

(i) Incorporation by reference.

(A) Permit for Texasgulf, Incorporated (air permit no. 2331R10) which was issued by the Environmental Management Commission on October 13, 1989.

(ii) Additional material–none.

(77) Revisions to the VOC RACT regulations, and other miscellaneous revisions to the North Carolina State Implementation Plan which were submitted on January 7, 1994.

(i) Incorporation by reference.

(A) Amendments to North Carolina regulations 15A NCAC 2D .0518, 2D.0531, 2D.0532, 2D.0901, and 2D.0936, effective on December 1, 1993.

(B) Amendments to North Carolina regulations 15A NCAC 2D.0902, 2D.0907, 2D.0910, 2D.0911, 2D.0947, 2D.0948, 2D.0949, 2D.0950, 2D.0951, and 2D.0952 effective on July 1, 1994.

(ii) Other material. None.

(78) Miscellaneous revisions to the North Carolina State Implementation Plan which were submitted on May 15, 1991.

(i) Incorporation by reference. (A) Amendments to North Carolina regulations 15A NCAC 2D.0103, 2D.0503, 2D.0530, 2D.0536, 2H.0601, and 2H.0607, of the North Carolina State Implementation Plan submitted on May 15, 1991, which were state effective on August 1, 1991.

(ii) Other material. None

(79) The North Carolina Department of Environment, Health and Natural Resources has submitted revisions to the North Carolina SIP on July 19, 1993. These revisions address the requirements of section 507 of title V of the CAA and establish the Small Business Stationary Source Technical and Environmental Assistance Program (PROGRAM).

(i) Incorporation by reference.

(A) North Carolina's Small Business Stationary Source Technical and Environmental Compliance Assistance Program which was adopted on May 12, 1994.

(ii) Other material. None.

(80) Modifications to the existing basic I/M program in North Carolina submitted on July 19, 1993, January 17, 1992, and September 24, 1992. Addition of regulations .1001 through .1005 establishes the I/M program.

(i) Incorporation by reference.

(A) Regulation .1001 and .1003, effective on December 1, 1982.

(B) Regulation .1002 effective on July 1, 1994.

(C) Regulation .1004 effective on July 1, 1993.

(D) Regulation .1005 effective on April 1, 1991.

(E) Specification for the North Carolina Analyzer System adopted December 12, 1991.

(ii) Other material. None.

(81) The VOC revision to the North Carolina State Implementation Plan which were submitted on October 14, 1994.

(i) Incorporation by reference. Addition of new North Carolina regulations 15A NCAC 2D .0518 which was state effective on September 1, 1994.

(ii) Other material. None.

(82) The redesignation and maintenance plan for Raleigh/Durham and Charlotte submitted by the North Carolina Department of Environmental Management on October 7, 1994 and August 9, 1991, as part of the North Carolina SIP. The emission inventory projections are included in the maintenance plans.

(i) Incorporation by reference. Section 3 of the Redesignation Demonstration and Maintenance Plan for Raleigh/Durham, Winston-Salem, and Charlotte Carbon Monoxide Nonattainment Area adopted on September 8, 1994.

(ii) Other material. None.

(83) The maintenance plan and redesignation request for the Charlotte-Gastonia area which include Mecklenburg and Gaston Counties submitted by the State of North Carolina on November 12, 1993.

(i) Incorporation by reference.

(A) The following subsections of Section 3.0, entitled Maintenance Plan, in the Supplement To The Redesignation Demonstration and Maintenance Plan for the Charlotte/Gaston Ozone Nonattainment Area adopted by the North Carolina Environmental Management Commission on May 11, 1995: 3.1 Concept of North Carolina's Maintenance Plan; 3.2 Foundation Control Program; Table 3.2 of Subsection 3.3; and 3.4 Contingency Plan.

(ii) Other material. None.

(84) The VOC RACT regulations, NSR regulations, and other miscellaneous revisions to the North Carolina State Implementation Plan which were submitted on August 15, 1994.

(i) Incorporation by reference.

(A) Addition of new North Carolina regulations 15A NCAC 2D .0805 and .0806 and 15A NCAC 2Q .0101 through .0111, and .0601 through .0607. effective on July 1, 1994.

(B) Amendments to North Carolina regulations 15A NCAC 2D .0101, .0501, .0503, .0530, .0531, .0532, .0533, .0601, .0801, .0802, .0803, and .0804 effective on July 1, 1994.

(ii) Other material. None.

(85) The VOC revisions to the North Carolina State Implementation Plan which were submitted on March 3, 1995, and on May 24, 1995.

(i) Incorporation by reference.

(A) Regulations 15A NCAC 2D .0955, .0956, and .0957 effective on April 1, 1995.

(B) Regulations 15A NCAC 2D .0950, and .0104 effective on May 1, 1995.

(ii) Other material. None.

(86) The PM–10 rules, Stack Testing Methods and other miscellaneous revisions to the North Carolina State Implementation Plan which were submitted on March 23, 1995.

(i) Incorporation by reference. Addition of new North Carolina rules 15A NCAC 2D .0501, .0516, and .0530 which were state effective on February 1, 1995.

(ii) Other material. None.

(87) Recodifications to the Forsyth County Air Quality Control Ordinance and Technical Code and other miscellaneous revisions to the North Carolina State Implementation Plan which were submitted on March 7, 1995.

(i) Incorporation by reference.

Forsyth County Air Quality Control Ordinance and Technical Code effective on December 19, 1994. Subchapter 3A,

Air Quality Control; Subchapter 3B, Relationship to State Code; Subchapter 3D, Air Pollution Control Requirements; Subchapter 3H, Section .0600 Air Quality Permits; and Subchapter 3Q, Air Quality Permits.

(ii) Other material. None.

(88) The VOC RACT regulations, NSR regulations, and other miscellaneous revisions to the North Carolina State Implementation Plan which were submitted on August 15, 1994. The Stage II regulations and other miscellaneous revisions to the North Carolina State Implementation Plan which were submitted on May 24, 1995.

(i) Incorporation by reference.

(A) Regulations 15A NCAC 2D .0531, .0909, .0928, .0932, .0933, and .0953 effective on July 1, 1994.

(B) Regulations 15A NCAC 2D .0902, .0907, .0910, .0911, .0952, and .0954 effective on May 1, 1995.

(ii) Other material. None.

(89) [Reserved]

(90) The VOC regulations and other miscellaneous revisions to the Forsyth County Local Implementation Plan which were submitted on December 28, 1995, and November 29, 1995.

(i) Incorporation by reference.

(A) Amendments to Forsyth County regulations Subchapter 3D .0104(a), .0531 (e)–(k), .0902 (a)–(h), .0907 (a)–(c), .0909 (a, c, d, e, and g), .0910 (a)–(d), .0911, .0950 (a and b), .0952 (a)–(c) and .0954 (f, h, k) adopted into the Air Quality Control Technical Code on November 13, 1995.

(B) Amendments to Forsyth County regulations Subchapter 3D .0501 (a)–(h), .0516 (a and b), .0518 (a)–(g), and .0530 (a)–(s), adopted into the Air Quality Control Technical Code on August 14, 1995.

(C) Subchapter 3D .0955, .0956, and .0957 adopted into the Air Quality Control Technical Code on August 14, 1995.

(ii) Other material. None.

[37 FR 10884, May 31, 1972]

EDITORIAL NOTE: For FEDERAL REGISTER citations affecting § 52.1770, see the List of CFR Sections Affected in the Finding Aids section of this volume.

EFFECTIVE DATE NOTE: At 61 FR 25790, May 23, 1996, § 52.1770, was amended by adding paragraph (c)(90), effective July 22, 1996.

§ 52.1771 Classification of regions.

The North Carolina plan was evaluated on the basis of the following classifications:

Air quality control region	Pollutant				
	Particulate matter	Sulfur oxides	Nitrogen dioxide	Carbon monoxide	Photochemical oxidants (hydrocarbons)
Western Mountain Intrastate	I	III	III	III	III
Eastern Mountain Intrastate	I	III	III	III	III
Metropolitan Charlotte Interstate	I	II	III	III	I
Northern Piedmont Intrastate	I	III	III	III	III
Eastern Piedmont Intrastate	I	III	III	III	III
Northern Coastal Intrastate	I	III	III	III	III
Southern Coastal Intrastate	II	III	III	III	III
Sandhills Intrastate	II	III	III	III	III

[37 FR 10884, May 31, 1972]

§ 52.1772 Approval status.

(a) With the exceptions set forth in this subpart, the Administrator approves North Carolina's plans for the attainment and maintenance of the national standards under section 110 of the Clean Air Act. Furthermore, the Administrator finds the plans satisfy all requirements of Part D, Title I of the Clean Air Act as amended in 1977, except as noted below. In addition, continued satisfaction of the requirements of Part D for the ozone portion of the SIP depends on the adoption and submittal of RACT requirements by July 1, 1980 for the sources covered by CTGs issued between January 1978 and January 1979 and adoption and submittal by each subsequent January of additional RACT requirements for sources covered

by CTGs issued by the previous January.

(b) New Source review permits issued pursuant to section 173 of the Clean Air Act will not be deemed valid by EPA unless the provisions of Section V of the Emission Offset (Interpretative Rule) published on January 16, 1979 (44 FR 3274) are met.

[45 FR 26043, Apr. 17, 1980]

§§ 52.1773—52.1774 [Reserved]

§ 52.1775 Rules and regulations.

Paragraph (g) of regulation 2D.0535 is disapproved because its automatic exemption for excess emissions during startup and shutdown is inconsistent with the Clean Air Act.

[51 FR 32075, Sept. 9, 1986]

§ 52.1776—52.1777 [Reserved]

§ 52.1778 Significant deterioration of air quality.

(a)–(b) [Reserved]

(c) All applications and other information required pursuant to § 52.21 of this part from sources located or to be located in the State of North Carolina shall be submitted to the North Carolina Environmental Management Commission, Department of Natural and Economic Resources, Division of Environmental Management, P.O. Box 27687, Raleigh, NC 27611. Attention: Air Quality Section, instead of the EPA Region IV office.

[43 FR 26410, June 19, 1978, as amended at 47 FR 7837, Feb. 23, 1982]

§ 52.1779 [Reserved]

§ 52.1780 VOC rule deficiency correction.

The revisions submitted to EPA for approval on September 21, 1989, January 14, 1991, April 29, 1991, August 13, 1991, and July 19, 1993, were intended to correct deficiencies cited in a letter calling for the State to revise its SIP for O_3 from Greer C. Tidwell, EPA Regional Administrator to Governor James C. Martin on May 25, 1988, and clarified in a letter from Winston A. Smith, EPA Region IV Air Division Director to the Chief of the Air Quality Section, North Carolina Division of Environmental Management. The deficiency in the following aspect of the rule has not been corrected.

(a) Procedures used to determine capture control device efficiency should be contained in 2D.0914. This deficiency must be corrected as soon as EPA issues final guidance on Capture Efficiency regulations.

(b) [Reserved]

[59 FR 32365, June 23, 1994]

§ 52.1781 Control strategy: Sulfur oxides and particulate matter.

(a) The plan's control strategy for particulate matter as outlined in the three-year variance for the coal-fired units of Duke Power Company and Carolina Power & Light Company from the particulate emission limits of Regulation 15 N.C.A.C. 2D.0503, with submittals on June 18, September 7, October 31, and December 14, 1979, by the North Carolina Department of Natural Resources and Community Development, is disapproved only insofar that it provides an exemption for excess emissions during periods of startup, shutdown, and verified malfunction. (See § 52.1770(c)(22).)

(b) The plan's control strategy for particulate matter as contained in regulation 15 NCAC 2D.0536, which was submitted on January 24 and February 21, 1983, and on December 17, 1985, and became effective on August 1, 1987, is disapproved insofar as it provides annual opacity limits for the seven plants of Duke Power Company and for Plants Roxboro and Cape Fear of Carolina Power and Light Company.

(c) The plan's control strategy for particulate matter as contained in revisions to 15 NCAC 2D.0536 submitted on January 24, 1983, February 21, 1983, and December 17, 1985, is disapproved as it applies to the Carolina Power and Light Asheville, Lee, Sutton and Weatherspoon Plants. These plants will continue to be subject to the particulate limits of 15 NCAC 2D.0503, contained in the original SIP, submitted to EPA on January 27, 1972, and approved on May 31, 1982 at 47 FR 10884.

(d) In letters dated February 4, 1987, and June 15, 1987, the North Carolina Department of Natural Resources and Community Development certified that no emission limits in the State's plan

are based on dispersion techniques not permitted by EPA's stack height rules.

[45 FR 55425, Aug. 20, 1980, as amended at 53 FR 11071, Apr. 5, 1988; 53 FR 22488, June 16, 1988; 54 FR 9434, Mar. 7, 1989; 54 FR 13185, Mar. 31, 1989]

Subpart JJ—North Dakota

§ 52.1820 Identification of plan.

(a) Title of plan: ''Implementation Plan for the Control of Air Pollution for the State of North Dakota.''

(b) The plan was officially submitted on January 24, 1972.

(c) The plan revisions listed below were submitted on the dates specified.

(1) Air quality maintenance area designation submitted June 26, 1974, by the Governor.

(2) Compliance schedules submitted on June 14, 1973, by the Governor.

(3) Provision for public notice and comment on new source reviews and a revised compliance schedule submitted on February 19, 1974, by the Governor.

(4) Clarification concerning the revision of the secondary particulate standard attainment date submitted on November 21, 1974, by the Governor.

(5) Explanation of why sources could not comply by the original attainment date submitted April 23, 1975, by the State Department of Health.

(6) Revisions to the North Dakota Century Code making emission data public information and revising penalties, revised new source performance standards, emission standards for hazardous air pollutants, and prevention of significant air quality deterioration regulations submitted on May 26, 1976, by the Governor.

(7) Supplemental information stating that the complete new source application would be available for public review submitted August 23, 1976 by the State Department of Health.

(8) A revised compliance schedule for the Basin Electric Power Plant at Velva submitted on December 22, 1976, by the Governor.

(9) Requirements for continuous opacity monitoring by 7 sources submitted on May 26, 1977, by the Governor.

(10) Provisions to meet the requirements of Part C, Title I, and section 110 of the Clean Air Act, as amended in 1977, were submitted on July 17, 1978.

(11) On January 25, 1980, the Governor submitted a plan revision to meet the requirements of Air Quality Monitoring 40 CFR part 58, subpart C, § 58.20, and Public Notification required under section 127 of the Clean Air Act.

(12) A revision requiring flares to meet 20% opacity and have automatic ignitors or pilots, increasing construction permit fees to $75.00 and establishing annual permit to operate fees was submitted on May 6, 1982 by the Governor.

(13) [Reserved]

(14) Revisions to the Prevention of Significant Deterioration requirements in Chapter 33–15–15 of the North Dakota regulations were submitted on October 28, 1982 by the Governor, with supplemental information submitted on July 5, 1983, March 8, 1984 and June 20, 1984, by the State Agency.

(15) A revision to the SIP was submitted by the Governor on January 26, 1988, for visibility monitoring and New Source Review.

(i) Incorporation by reference.

(A) In a letter dated January 26, 1988, Governor George A. Sinner submitted a SIP revision for visibility protection.

(B) The SIP revision for visibility protection, ''Chapter 6, Air Quality Surveillance, Section 6.10, Visibility Monitoring'' and ''Chapter 33–15–19, Visibility Protection'', became effective on October 1, 1987, through action by the North Dakota Legislative Council.

(16) On January 26, 1988, the Governor submitted a plan adding Stack Height Regulations, Chapter 33–15–18.

(i) Incorporation by reference.

(A) Addition to North Dakota Air Pollution Control Rules Chapter 33–15–18, Stack Heights, was adopted on July 21, 1987 and effective on October 1, 1987.

(17) In a letter dated April 18, 1986, the Director of the Division of Environmental Engineering, North Dakota Department of Health, submitted the stack height demonstration analysis with supplemental information submitted on July 21, 1987. EPA is approving the demonstration analysis for all of the stacks.

(i) Incorporation by reference. (A) Stack height demonstration analysis

submitted by the State on April 18, 1986 and July 21, 1987.

(18) On January 26, 1988, the Governor of North Dakota submitted revisions to the plan. The revisions established new regulations and revised existing regulations and procedures.

(i) Incorporation by reference.

(A) Revisions to the Air Pollution Control Rules of the State of North Dakota Chapters 33–15–01, 33–15–02, 33–15–03, 33–15–04, 33–15–05, 33–15–07, 33–15–10, 33–15–11, 33–15–14, and 33–15–15, inclusive, and the addition of a new chapter 33–15–20 which were effective on October 1, 1987.

(19) On April 18, 1989, the Governor of North Dakota submitted revisions to the plan. The revisions included updates to existing regulations and the Group III PM10 plan.

(i) Incorporation by reference.

(A) Revisions to the Air Pollution Control Rules of the State of North Dakota Chapters, 33–15–01, 33–15–02, 33–15–4, 33–15–07, 33–15–10, 33–15–11, 33–15–14, and 33–15–15, inclusive, which were effective on January 1, 1989.

(ii) Additional material.

(A) August 22, 1989 letter from Dana K. Mount, Director of the Division of Environmental Engineering, to Doug Skie, EPA.

(B) August 28, 1989 letter from Dana K. Mount, Director of the Division of Environmental Engineering, to Laurie Ostrand, EPA.

(C) September 5, 1989 letter from Terry O'Clair, Assistant Director of the Division of Environmental Engineering, to Laurie Ostrand, EPA.

(20) On June 26, 1990, the Governor of North Dakota submitted revisions to the plan. The revisions include amendments to the prevention of significant deterioration of air quality (PSD) regulations to incorporate the nitrogen dioxide (NO_2) increments and to make several ''housekeeping'' modifications.

(i) Incorporation by reference.

(A) Revisions to the North Dakota Administrative Code, Chapter 33–15–15, Prevention of Significant Deterioration of Air Quality, effective June 1, 1990.

(ii) Additional material.

(A) October 22, 1990, letter from Douglas Skie, EPA, to Dana Mount, Director, Division of Environmental Engineering, North Dakota State Department of Health and Consolidated Laboratories.

(B) November 6, 1990 letter from Dana Mount, Director, Division of Environmental Engineering, North Dakota State Department of Health and Consolidated Laboratories, to Douglas Skie, EPA.

(21) On June 26, 1990, the Governor of North Dakota submitted revisions to the plan for new source performance standards.

(i) Incorporation by reference.

(A) Revisions to the Air Pollution Control Rules of the State of North Dakota Chapter 33–15–12 which was effective on June 1, 1990.

(ii) Additional material.

(A) January 7, 1991, letter from James J. Scherer, EPA, to George A. Sinner, Governor, State of North Dakota, on the authority for implementation and enforcement of the New Source Performance Standards (NSPS) for 40 CFR part 60, subpart QQQ.

(22) On June 26, 1990, the Governor of North Dakota submitted revisions to the plan. The revisions include amendments to the hydrogen sulfide standard and the format of other ambient standards, and various other minor changes.

(i) *Incorporation by reference.* (A) Revisions to the North Dakota Administrative Code: General Provisions 33–15–01–04.30, 33–15–01–07.2, 33–15–01–08, 33–15–01–15.2, 33–15–01–17; Ambient Air Quality Standards 33–15–02 Table 1 standards for sulfur dioxide, hydrogen sulfide, carbon monoxide, ozone, and nitrogen dioxide; Emissions of Particulate Matter Restricted 33–15–05–02.2e, Table 4; Control of Pesticides 33–15–10–02.5; Designated Air Contaminant Sources, Permit to Construct, Permit to Operate 33–15–14–02.4.a and b, 33–15–14–02.5.a, 33–15–14–05.1.b(3); Control of Emissions from Oil and Gas Well Production Facilities 33–15–20–01.1, 33–15–20–01.2.l and m, 33–15–20–02.1, 33–15–20–03.1, 2, and 3, 33–15–20–04; effective June 1, 1990.

(ii) *Additional material.* Letter dated February 14, 1992, from Dana K. Mount, Director, Division of Environmental Engineering, to Douglas M. Skie, EPA. This letter provided the State's commitment to meet all requirements of the EPA ''Guideline on Air Quality

Models (Revised)'' for air quality modeling demonstrations associated with the permitting of new PSD sources, PSD major modifications, and sources to be located in nonattainment areas.

(23) On June 30, 1992, the Governor of North Dakota submitted revisions to the plan for new source performance standards and national emission standards for hazardous air pollutants.

(i) *Incorporation by reference.*

(A) Revisions to the Air Pollution Control Rules, Chapter 33–15–12, Standards of Performance for New Stationary Sources, and Chapter 33–15–13, excluding Section 33–15–13–02, Emission Standards for Hazardous Air Pollutants, effective June 1, 1992.

(24) On June 24, 1992, the governor of North Dakota submitted revisions to the plan. The revisions correct enforceability deficiencies in the SO_2 regulations.

(i) Incorporation by reference.

(A) Revisions to the North Dakota Administrative Codes, Chapter 33–15–06, Emissions of Sulfur Compounds Restricted, which became effective June 1, 1992.

(25) [Reserved]

(26) The Governor of North Dakota submitted revisions to the North Dakota State Implementation Plan and Air Pollution Control Rules with letters dated June 26, 1990, June 30, 1992, and April 29, 1994. The revisions address air pollution control rules regarding general provisions; emissions of particulate matter and organic compounds; new source performance standards (NSPS); national emission standards for hazardous air pollutants (NESHAPs); federally enforceable State operating permits (FESOPs); prevention of significant deterioration of air quality; and control of emissions from oil and gas well production facilities.

(i) Incorporation by reference.

(A) Revisions to the Air Pollution Control Rules as follows: Emissions of Particulate Matter Restricted 33–15–05–02, 33–15–05–03, and 33–15–05–04; Control of Organic Compound Emissions 33–15–07; Prevention of Significant Deterioration of Air Quality 33–15–15–01; and Control of Emissions from Oil and Gas Well Production Facilities 33–15–20–01, 33–15–20–02, and 33–15–20–03, effective June 1, 1992.

(B) Revisions to the Air Pollution Control Rules as follows: General Provisions 33–15–01–04 and 33–15–01–13; Standards of Performance for New Stationary Sources 33–15–12; and Emission Standards for Hazardous Air Pollutants 33–15–13, effective June 1, 1992 and March 1, 1994.

(C) Revisions to the Air Pollution Control Rules as follows: Designated Air Contaminant Sources, Permit to Construct, Minor Source Permit to Operate, Title V Permit to Operate, 33–15–14–01 through 33–15–14–05, effective March 1, 1994.

(27) On April 29, 1994, the Governor of North Dakota submitted revisions to the prevention of significant deterioration regulations in chapter 33–15–15 of the North Dakota Air Pollution Control Rules to incorporate changes in the Federal PSD permitting regulations for utility pollution control projects, PM–10 increments, and municipal waste combustors.

(i) Incorporation by reference.

(A) Revisions to Chapter 33–15–15 of the North Dakota Air Pollution Control Rules, Section 33–15–15–01, Subsections 1.a.(3) and (4), 1.c, 1.e.(4), 1.h, 1.i, 1.m, 1.x.(2)(h)–(k), 1.aa.(2)(c), 1.bb, 1.dd, 1.ee, 1.ff, 1.hh, 2.b, 4.d.(3)(a), and 4.j.(4)(b), effective 3/1/94.

[37 FR 10885, May 31, 1972]

EDITORIAL NOTE: For FEDERAL REGISTER citations affecting § 52.1820, see the List of CFR Sections Affected in the Finding Aids section of this volume.

§ 52.1821 Classification of regions.

The North Dakota plan was evaluated on the basis of the following classifications:

Air quality control region	Pollutant				
	Particulate matter	Sulfur oxides	Nitrogen dioxide	Carbon monoxide	Photochemical oxidants (hydrocarbons)
Metropolitan Fargo-Moorhead Interstate	II	III	III	III	III

Air quality control region	Pollutant				
	Particulate matter	Sulfur oxides	Nitrogen dioxide	Carbon monoxide	Photochemical oxidants (hydrocarbons)
North Dakota Intrastate	II	III	III	III	III

[37 FR 10885, May 31, 1972]

§ 52.1822 Approval status.

With the exceptions set forth in this subpart, the Administrator approves the North Dakota plan for the attainment and maintenance of the national standards.

[39 FR 7283, Feb. 25, 1974]

§ 52.1823 [Reserved]

§ 52.1824 Review of new sources and modifications.

(a)–(b) [Reserved]

(c) The State of North Dakota has clarified the language contained in the North Dakota Administrative Code on the use of the EPA ''Guideline on Air Quality Models'' as supplemented by the ''North Dakota Guideline for Air Quality Modeling Analysis''.In a letter to Douglas M. Skie, EPA, dated February 14, 1992, Dana K. Mount, Director of the Division of Environmental Engineering, stated:

> To clarify this issue, the State of North Dakota will commit to meeting all requirements of the EPA Guideline for air quality modeling demonstrations associated with the permitting of new PSD sources, PSD major modifications, and sources which will be located in nonattainment areas. If any conflict exists, the EPA Guideline will take precedence for these source categories.

[39 FR 7283, Feb. 25, 1974, as amended at 51 FR 40677, Nov. 7, 1986; 57 FR 28620, June 26, 1992; 61 FR 16062, Apr. 11, 1996]

§§ 52.1825—52.1828 [Reserved]

§ 52.1829 Prevention of significant deterioration of air quality.

(a) The North Dakota plan, as submitted, is approved as meeting the requirements of Part C, Title I, of the Clean Air Act, except that it does not apply to sources proposing to construct on Indian Reservations.

(b) Regulation for preventing of significant deterioration of air quality. The provisions of § 52.21 (b) through (v) are hereby incorporated by reference and made a part of the North Dakota State Implementation Plan and are applicable to proposed major stationary sources or major modifications to be located on Indian Reservations.

[44 FR 63103, Nov. 2, 1979. Correctly designated at 44 FR 75635, Dec. 21, 1979]

§ 52.1831 Visibility protection.

A revision to the SIP was submitted by the Governor on April 18, 1989, for visibility general plan requirements and long-term strategies.

[54 FR 41098, Oct. 5, 1989]

§ 52.1832 Stack height regulations.

The State of North Dakota has committed to revise its stack height regulations should EPA complete rulemaking to respond to the decision in *NRDC* v. *Thomas*, 838 F. 2d 1224 (D.C. Cir. 1988). In a letter to Douglas M. Skie, EPA, dated May 11, 1988, Dana K. Mount, Director, Division of Environmental Engineering stated:

> * * * We are submitting this letter to allow EPA to continue to process our current SIP submittal with the understanding that if EPA's response to the NRDC remand modified the July 8, 1985, regulations, EPA will notify the State of the rules that must be changed to comply with EPA's modified requirements. The State of North Dakota agrees to make the appropriate changes to its stack height rules.

[53 FR 45764, Nov. 14, 1988]

§ 52.1833 Small business assistance program.

The Governor of North Dakota submitted on November 2, 1992, a plan to develop and implement a Small Business Assistance Program to meet the requirements of section 507 of the Clean Air Act by November 15, 1994. The plan commits to provide technical

and compliance assistance to small businesses, hire an Ombudsman to serve as an independent advocate for small businesses, and establish a Compliance Advisory Panel to advise the program and report to EPA on the program's effectiveness.

[59 FR 1486, Jan. 11, 1994]

§ 52.1834 Minor source permit to operate program.

Emission limitations and related provisions, which, in accordance with Rule 33–15–14–03, are established as federally enforceable conditions in North Dakota minor source operating permits, shall be enforceable by EPA. EPA reserves the right to deem permit conditions not federally enforceable. Such a determination will be made according to appropriate procedures and will be based upon the permit, permit approval procedures, or permit requirements which do not conform with the operating permit program requirements of EPA's underlying regulations.

[60 FR 43401, Aug. 21, 1995]

Subpart KK—Ohio

§ 52.1870 Identification of plan.

(a) Title of plan: ''Implementation Plan for the Control of Suspended Particulates, Sulfur Dioxide, Carbon Monoxide, Hydrocarbons, Nitrogen Dioxide, and Photochemical Oxidants in the State of Ohio.''

(b) The plan was officially submitted on January 31, 1972.

(c) The revisions listed below were submitted on the dates specified.

(1) Request for extensions and a revision of monitoring network was submitted on March 20, 1972, by the Ohio Air Pollution Control Board.

(2) State provisions for making emissions data available to the public was outlined in a letter of May 8, 1972, by the Ohio Department of Health.

(3) On May 9, 1972, the State provided assurance that action is being taken in the Assembly to secure authority for controlling auto emissions.

(4) Amendments to air pollution regulations AP–3–11, 12, 13, 14, and AP–9–04 were forwarded on July 7, 1972, by the Governor.

(5) Revisions to AP–2–01, 02, 04, 05; AP–3–01, 08, 09, 13; AP–9–01, 02, 03 were submitted on August 4, 1972 by the Governor.

(6) New regulations AP–13–01 and 13–02 were submitted on October 12, 1972 by the Governor.

(7) Letter from the Director of the Ohio EPA was submitted on June 6, 1973, indicating that portions of AP–3–11, and AP–3–12 are for informational purposes only.

(8) The Governor of Ohio submitted on July 2, 1973, the ''Implementation Plan to Achieve Ambient Air Quality Standard for Photochemical Oxidant in the Cincinnati Air Quality Control Region'' and the ''Implementation Plan to Achieve Ambient Air Quality Standard for Photochemical Oxidant in the Toledo Air Quality Control Region.''

(9) The Governor of Ohio submitted on July 24, 1973, the ''Implementation Plan to Achieve Ambient Air Quality Standards for Photochemical Oxidants—Dayton Air Quality Control Region.''

(10) On January 25, 1974, Ohio submitted a secondary particulate plan for three AQCR's in Ohio.

(11) On July 16, 1975, Ohio submitted regulations revising the attainment dates for particulate matter, nitrogen oxides, carbon monoxide, hydrocarbons and photochemical oxidants.

(12) The Governor of Ohio submitted on May 30, 1974 and August 10, 1976, revisions to the Ohio Implementation for the control of open burning.

(13) Consent and Abatement Order regarding Columbus and Southern Ohio Electric Company's Picway Units 3 and 4, submitted by Governor on October 17, 1975, supplemented on November 17, 1976 and June 1, 1977.

(14) On July 27, 1979 the State submitted its nonattainment area plan for specific areas designated as nonattainment for ozone and carbon monoxide in the March 3, 1978 and October 5, 1978 FEDERAL REGISTERS (43 FR 8962 and 43 FR 45993). The submittal contained Ohio's Part D nonattainment plans for the following ozone and carbon monoxide urban nonattainment areas: Akron, Canton, Cincinnati, Cleveland, Columbus, Dayton, Steubenville and

Toledo. The submittal contained transportation control plans and demonstrations of attainment (for carbon monoxide and/or ozone) for each of the above mentioned urban nonattainment areas. Regulations for the control of volatile organic compound emissions were not included with this submittal but were submitted separately on September 13, 1979.

(15) On September 13, 1979, the State submitted regulations for the control of volatile organic compound and carbon monoxide emissions from stationary sources.

(16) On December 28, 1979, the State amended the attainment demonstration submitted on July 27, 1979 for the Cleveland Urban area. On November 24, 1980 and July 21, 1981, the State submitted additional information on the transportation control plans for the Cleveland Urban area.

(17) On January 8, 1980, the State amended the carbon monoxide attainment demonstration submitted on July 27, 1979 for the Steubenville urban area.

(18) On January 15, 1980, the State amended the attainment demonstrations submitted on July 27, 1979 for the urban areas of Cincinnati, Toledo and Dayton.

(19) On April 7, 1980 the State of Ohio committed to correct the deficiencies presented in the March 10, 1980 Notice of Proposed Rulemaking.

(20) On April 15, 24, 28, May 27, July 23 and August 6, 1980 the State submitted comments on, technical support for, and commitments to correct the deficiencies cited in the March 10, 1980 Notice of Proposed Rulemaking. In addition to this the May 27, 1980 letter also contained a commitment by the State to adopt and submit to USEPA by each subsequent January, reasonable available control technology requirements for sources covered by the control techniques guidelines published by USEPA the preceding January.

(21) On December 28, 1979 the State of Ohio submitted its Part D carbon monoxide and ozone nonattainment area plan for the Youngstown urban area. The submittal contained transportation control plans and demonstrations of attainment (for carbon monoxide and/or ozone). On February 12, 1980 the State amended the ozone attainment demonstration submitted on December 28, 1979.

(22) On June 12, 1980 and August 6, 1980, the State submitted technical support and commitments to correct the deficiencies cited in the May 16, 1980 Notice of Proposed Rulemaking. On November 20, 1980 and July 21, 1981, the State submitted additional information on implementor commitments for the Youngstown Urban area.

(23) On May 8, 1979, Ohio submitted revisions to regulations 3745–25–01 through 3745–25–04 (previously codified as AP–11–01 through AP–11–04) containing emergency episode procedures.

(24) On July 25, 1980 the State of Ohio submitted its Part D revision to the New Source Review portion of the State Implementation Plan. On September 25, 1980 the State submitted a response to the August 26, 1980 FEDERAL REGISTER notice of proposed rulemaking. The response contained information which corrects certain deficiencies and commits to correct by a specified date other deficiencies.

(25) The following information was submitted to USEPA regarding the Ohio Sulfur Dioxide Standards

(i) On February 12, 1980 the Director of the Ohio EPA submitted the Ohio Administrative Code (OAC) Rules 3745–18–01 to 3745–18–94, Sulfur Dioxide Standards adopted on November 14, 1979 effective December 28, 1979.

(ii) Ohio EPA sent technical support for the Ohio Sulfur Dioxide Standards on September 12, 1979, October 23, 1979, May 16, 1980, March 27, 1981, May 5, 1981, July 15, 1981 and September 24, 1981.

(iii) The following regulations were withdrawn by the Governor of Ohio on May 16, 1980; OAC Rules 3745–18–08(H), 3745–18–15(B), 3745–18–53(E), 3745–18–63(K), 3745–18–77(B) and 3745–18–90(C). These rules are applicable to the following plants:

Cairo Chemical Corporation in Allen County, Crystal Tissue Company in Butler County, U.S. Steel Corporation, Lorain—Cuyahoga Works in Lorain County, Bergstrom Paper Company in Montgomery County, Mead Corporation in Ross County and Shell Chemical Company in Washington, County.

(iv) The following regulations were withdrawn by the Governor of Ohio on December 19, 1980 only as it applies to

the B.F. Goodrich Company, Avon Lake Chemical Plant in Lorain County; OAC 3745–18–53(A). These regulations are still applicable to other facilities in Lorain County.

(v) The following regulations were withdrawn by the Governor of Ohio on February 13, 1981; OAC Rules 3745–18–49(J) which is applicable to the Ohio Rubber Company in Lake County and 3745–18–80(D) which is applicable to the Union Carbide Corporation in Seneca County.

(vi) The Governor of Ohio submitted a revised OAC Rule 3745–18–80(D) which is applicable to the Union Carbide Corporation in Seneca County on April 30, 1981.

(26) On February 8, 1980, the State of Ohio submitted a revision to provide for modification of the existing air quality surveillance network.

(27) On February 18, and March 13, 1981, the Governor of Ohio submitted Rule 08 of Chapter 3745–17 of the Ohio Administrative Code for Middletown and the operating permits for the fugitive sources located at ARMCO's Middletown Works Plant.

(28) On October 21 and November 21, 1980 the State submitted comments on, technical support for, and commitments to correct the deficiencies cited in the March 10, 1980 Notice of Proposed Rulemaking.

(29) On September 17, 1980 the State of Ohio submitted a vehicle inspection and maintenance (I/M) program developed for the urbanized area of Cleveland and the Ohio portion of the Cincinnati metropolitan area. On December 5, 1980 the State submitted comments on, and commitments for correcting, the deficiencies cited in the November 7, 1980 Supplemental Notice of Proposed Rulemaking.

(30) On February 18, 1981, the State of Ohio committed itself to submit by December 31, 1981, the corrective materials for the Middletown, Ohio total suspended particulate plan.

(31) On March 27, 1981 and March 10, 1982 the State of Ohio submitted revisions to the total suspended particulate (TSP) portion of its State Implementation Plan (SIP). These revisions are in the form of an alternative emissions reduction plan (bubble) for the General Motors (GM) Central Foundry located in Defiance County, Ohio. Incorporated into Ohio's SIP are the emission limitations, interim and final compliance milestones, control equipment requirements and testing procedures specified in the variances and permits submitted for the GM bubble.

(32) On July 27, 1979, the State of Ohio submitted materials to satisfy the general requirements of the Clean Air Act under sections 110(a)(2)(K); 126, 127, and 128. On January 30, 1981, the State of Ohio also submitted an amended substitute Senate Bill 258, which was enacted into law on December 19, 1980, amending Ohio Revised Code 3704.

(33) Revision to plan allowing Standard Oil Company of Ohio Toledo refinery variances from State Regulations 3745–21–09(M) (1) and (2) submitted April 10, 1981 by the State.

(34) Revision to plan allowing Standard Oil Company of Ohio Lima refinery variance from State Regulation 3745–21–09(M)(2) submitted April 10, 1981 by the State.

(35) On August 27, 1981, the State of Ohio submitted a variance for the Pipeline Working Tank at the ARCO Pipeline Refinery in Summit County, Ohio.

(36)–(37) [Reserved]

(38) The Governor of Ohio on June 15, 1981 submitted a revision to the ozone portion of the Ohio State Implementation Plan. This revision is for six coating lines located at the Speciality Materials Division of Fasson-Avery located in Lake County, Ohio.

(39) On August 27, 1981, the State of Ohio submitted a variance for the Pipeline Working Tank at the ARCO Pipeline Refinery in Lucas County, Ohio.

(40) On February 12, 1981, the State of Ohio submitted its Lead SIP Plan which contains a discussion of ambient monitoring results, an attainment demonstration and stationary and mobile source controls for lead.

(41) On April 10, 1981, the Governor of Ohio submitted revised requirements for Republic Steel Corporation's Youngstown Sinter Plant.

(42) On February 25, 1980, the State of Ohio submitted the revised Ohio Administrative Code (OAC) Rules 3745–35–01 through 3745–35–04 which set forth requirements for air permits to operate

and variances. These rules were adopted on September 28, 1979 and became effective in Ohio on November 7, 1979.

(43) On February 12, 1981, the State of Ohio submitted adopted amended Ohio Administrative Code (OAC) Rules 3745–21–01, 04, 09 and 10, Emission Standards and Technology Requirements for Certain Sources of Volatile Organic Compounds Emissions. The following portions of these rules were withdrawn by the State of Ohio on March 27, 1981; OAC Rules 3745–21–04(C)(19)(a) and 3745–21–09(R)(3)(a). On January 8, 1982, the State of Ohio submitted additional materials pertaining to OAC Rules 3745–21–09 (H), (U) and (X).

(44) On April 16, 1981, the Ohio EPA submitted a variance which would extend for Presto Adhesive Paper Company in Montgomery County, Ohio the deadline for complying with applicable Ohio VOC emission limitations from April 1, 1982 to April 1, 1983 for water-based adhesive paper coatings and to April 1, 1984 for water-based silicone paper coatings.

(45) On Feburary 25, 1980, the State submitted revisions to rules 01 through 06, 08 and 09 of Chapter 15 of the Ohio Administrative Code. These rules establish general provisions for the control of air pollution and were previously codified and approved as AP–2–01 through 06, 08 and 09. Rules 01 through 04, 06, 08 and 09 are approved as revisions to the Ohio SIP and rule 05 is deleted from the Ohio SIP.

(46) On August 26, 1982, the Ohio Environmental Protection Agency submitted a variance which would establish an alternative emission control program (weighted averaging bubble) for eight vinyl coating lines at Uniroyal Plastic Products in Ottawa County, Ohio, and an alternative compliance schedule which will allow Uniroyal Plastic Products additional time to convert to waterborne coatings and inks. The final compliance date is October 1, 1987.

(47) On June 29, 1982, the State submitted an amendment to the definition of air contaminant as contained in section 3704.01(B) of the Ohio Revised Code.

(48) On August 31, 1982, Ohio Environmental Protection Agency submitted a variance which would establish an alternative emission control program (weighted averaging bubble) for five rotogravure printing lines at Packaging Corporation of America (PCA) in Wayne County, Ohio and an alternative compliance schedule which will allow PCA additional time to convert to waterborne coatings and inks. The final compliance date is July 1, 1987.

(49) On September 10, 1982 the Ohio Environmental Protection Agency submitted a revision to its ozone SIP for the Mead Paper Corporation, Chilpaco Mill in Ross County, Ohio. This revision is in the form of three variances for the three flexographic printing lines at Mead Paper and contains revised emission limits and compliance schedules for each of the lines. Technical Support for this revision was also submitted on April 27, 1982.

(50) On October 22, 1982, the Ohio Environmental Protection Agency submitted a revision to its Ozone SIP for the Standard Register Company. The revision request is in the form of a variance for an extended compliance time schedule for a surface coating line and spray boot for painting miscellaneous metal parts. Final compliance is changed from December 31, 1982 to December 31, 1983.

(51) On October 1, 1982, and February 28, 1983 the State of Ohio submitted revisions to Ohio Administrative Code (OAC) Rules 3745–35–03 which set forth requirements for obtaining variances.

(52)—(55) [Reserved]

(56) On January 5, 1983 the Ohio Environmental Protection Agency submitted a revision to its ozone SIP for the U.S. Steel Supply Division, Sharon Plant in Trumbull County, Ohio. Technical support for this revision was also submitted on November 12, 1982.

(57) On January 4, 1982, amended December 23, 1982, the Ohio Environmental Protection Agency (OEPA) submitted a revision to its ozone SIP for the Chrysler Plastic Products Corporation, Sandusky Vinyl Product Division, in Erie County, Ohio. This revision amends the emission limitations and extends the compliance dates for five vinyl coating lines at this facility. Technical support for this revision was also submitted on June 28, 1982.

(58) On July 14, 1982, the State submitted revisions to its State Implementation Plan for TSP and SO_2 for Toledo Edison Company's Bay Shore Station in Lucas County, Ohio.

(59) On March 9, 1983, the Ohio Environmental Protection Agency submitted a variance which would establish an alternative emission control program (bubble) for eight vinyl coating lines at B.F. Goodrich in Washington County, Ohio, and an alternative compliance schedule which will allow B.F. Goodrich additional time to achieve final compliance through conversion to waterborne coatings and inks by December 31, 1985. If the company is unable to achieve compliance by December 1, 1985, through reformulation, the company must install add-on controls no later than December 1, 1987.

(60) The State of Ohio submitted a revised demonstration that showed attainment by December 31, 1982, of the Carbon Monixide (CO) National Ambient Air Quality Standards (NAAQS) for the Cincinnati area (Hamilton County) on May 24, 1982. Supplemental information was submitted on September 23, 1982, November 4, 1982, and March 16, 1983. The May 24, 1982, submittal also requested that the five year extension for meeting the NAAQS requested on July 29, 1979, and granted on October 31, 1980, be rescinded for this area. EPA has rescinded this extension only for the Cincinnati demonstration area for CO.

(61) On January 11, 1983, the Ohio EPA submitted justification and supportive documentation for the two categories of gasoline dispensing facilities and cutback asphalt. On March 2, 1983, Ohio EPA submitted demonstrations of reasonable further progress in the Canton and Youngstown areas. This information was submitted to satisfy the conditions on the approval of the 1979 ozone SIP.

(62) On September 8, 1983, the Ohio Environmental Protection Agency submitted a revision to the total suspended particulate SIP for Corning Glass Works. The revision is in the form of a permit to operate a glass furnace and contains an equivalent visible emission limitation for the furnace.

(63) On January 3, 1984, the Ohio Environmental Protection Agency submitted a revision to the Ohio Administrative Code 3745–15–07, Air Pollution Nuisance Prohibited.

(64) On September 2, 1982, the State of Ohio submitted a revision to the total suspended particulate State Implementation Plan for the B.F. Goodrich Chemical Plant in Avon Lake, Lorain County, Ohio. This revision is being disapproved. (See § 52.1880(g))

(65) On August 3, 1983, May 7, 1984 and June 28, 1984, the Ohio Environmental Protection Agency submitted revisions to the total suspended particulate State Implementation Plan for Chardon Rubber Company, Corning Glass Works, Denman Rubber Manufacturing Company, Packaging Corporation of America, and Springview Center. Each of the revisions are in the form of a permit to operate and contain equivalent visible emission limitations.

(66) On March 16, 1984, the Ohio Environmental Protection Agency submitted commitments for satisfying the conditions of approval to the ozone [52.1885 (b)(2)] and particulate matter [52.1880 (d)(1)] State Implementation Plans.

(67) [Reserved]

(68) On May 6, 1983, the Ohio Environmental Protection Agency (OEPA) submitted materials constituting a proposed revision to Ohio's ozone SIP for Harrison Radiator. Harrison Radiator has two metal coating facilities; one is the North facility located in downtown Dayton and the other is the South facility located in the City of Moraine.

(i) Incorporation by reference.

(A) The Ohio Environmental Protection Director's final Findings and Orders, May 6, 1983.

(B) Letters of September 10, 1984, and September 4, 1984, to USEPA from OEPA.

(C) The Ohio Environmental Protection Director's final Findings and Orders, September 4, 1984.

(69) On September 13, 1983, the Ohio Environmental Protection Agency submitted a variance which would establish an alternative emission control program (bubble) for Volatile Organic Compound emissions from a gasoline and aviation fuel loading rack located at Standard Oil Company in Trumbull County, Ohio.

(i) Incorporation by reference.

(A) An August 26, 1983, Permit and Variance to Operate an Air Contaminant Source Terms and Conditions, Application No. 02 78 06 0355 J001 and 02 78 06 0355 J002, for Niles Terminal Station N. 234, Niles Aviation Gasoline Bulk Terminal.

(70) On April 8, 1982, June 22, 1982, November 8, 1982, May 24, 1985, and November 12, 1986, the Ohio Environmental Protection Agency submitted a revision to the sulfur dioxide SIP for the Ohio Power Muskingum River Power Plant located in Morgan and Washington Counties. USEPA approves an emission limit of 8.6 lbs/MMBTU to protect the primary NAAQS with a compliance date of June 17, 1980. In addition, USEPA approves an emission limit of 7.6 lbs/MMBTU to protect the secondary NAAQS with a compliance date of July 1, 1989.

(i) Incorporation by reference.

(A) Ohio Administrative Code (OAC) rule 3745–18–03(C)(3)(gg)(vi) effective in Ohio December 28, 1979; rule 3745–18–64(B) and rule 3745–18–90(B) effective in Ohio on October 1, 1982.

(B) Director's Final Findings and Orders dated October 18, 1982, before the Ohio Environmental Protection Agency.

(C) Director's Findings and Order dated November 18, 1986, before the Ohio Environmental Protection Agency.

(ii) Additional information.

(A) Technical Support Document for emission limitations including dispersion modeling for the Muskingum River Plant submitted by the State on April 8, 1982.

(B) Muskingum River Plant Supplementary Technical Support Document submitted by the State on June 22, 1982.

(C) Air Monitoring Data submitted by the State on June 22, 1982.

(71) On July 1, 1980, the State of Ohio submitted a revision to its State Implementation Plan amending § 3704.11 of the Ohio Revised Code. This revision expands the authority given to a political subdivision in relation to certain open burning activities. Additional information for the revision was also submitted on September 30, 1980 and January 16, 1981.

(72) On March 16, 1982, the State of Ohio submitted a revision to its State Implementation Plan for TSP for the Southerly Wastewater Treatment Plant in Columbus, Ohio.

(73) On March 28, 1983, the State of Ohio Environmental Protection Agency (OEPA) submitted amendments to the Ohio Administrative Code (OAC) Chapter 3745–21 and supporting data to USEPA as a proposed revision to the ozone portion of its SIP. OAC Chapter 3745–21, entitled ''Carbon Monoxide, Photochemically Reactive Materials, Hydrocarbons, and Related Material Standards'', contains Ohio's VOC RACT I and II regulations. The amendments to these regulations are embodied in the OAC as follows: Definitions, Rule 3745–21–01; Attainment dates and compliance time schedules, Rule 3745–21–04; Control of emissions of organic compounds from stationary sources, Rule 3745–21–09; and Compliance test methods and procedures, Rule 3745–21–10. See (c)(15). USEPA is not taking action on the applicability of Rule 3745–21–09 to new sources of VOC, to the gasoline throughout exemption level for gasoline dispensing facilities, and to the compliance date extension for Honda of America Manufacturing, Inc. auto and motorcycle assembly plant in Marysville. USEPA is not taking action on OAC Rule 3745–21–09(AA))(2)(a) which exempts any dry cleaning facility in which less than 60,000 pounds of fabrics are cleaned per year. USEPA is not taking action on OAC Rule 3745–21–09(U)(2)(f) (i) and (ii) which apply to new sources (surface coating lines). USEPA is identifying deficiencies in the existing Rule 3745–21–09(D)(3) which contains an alternative daily emission limitation for can coating facilities. USEPA identified the following deficiencies within this rule: This rule presents equations for determining an alternative daily emission limitation. USEPA finds that the equations are incorrect in that they are based on volume of coating used (in gallons, excluding water), which in many cases can lead to erroneous results. Equivalency calculations for coatings should be performed on a basis of volume of coating solids used rather than volume of coating used. (45 FR 80824 gives an example calculation

for can coating done on a volume solids basis.)

(i) Incorporation by reference.

(A) Amendments to OAC Chapter 3745–21, dated June 21, 1982 and January 24, 1983.

(1) Rule 3745–21–01; Definitions.

(i) Section (D)(16), (36), and (50), paper and vinyl coating.

(ii) Section (F)(1–8), asphalts in road construction and maintenance.

(iii) Sections (E)(8), and (J)(5), corrections to Sections (E)(8) and (J)(5).

(2) Rule 3745–21–04; Attainment dates and compliance time schedules.

(i) Section (C)(3), can coating lines.

(ii) Section (C)(15), cutback and emulsified asphalts.

(iii) Section (C)(29), gasoline tank trucks.

(iv) Section (C)(33), External floating roof tanks.

(*3*) Rule 3745–21–09, Control of emission of organic compounds from stationary sources.

(*i*) Section (B), Emission limitations.

(*ii*) Sections, (C) (1) and (3), Surface coating of automobiles and light duty trucks.

(*iii*) Sections (I) (1) and (2), Surface coating of metal furniture.

(*iv*) Sections (K) (1) and (3) and (K)(4) (a), (b) and (c), Surface coating of large appliances.

(*v*) Sections (N) (1), (2), and (3) (b) and (c), Use of cutback and emulsified asphalts.

NOTE: USEPA is not approving (N)(3) (a) and (e).

(*vi*) Section (O)(2), Solvent metal cleaning.

(*vii*) Sections (P) (1), (4), and (5), Bulk gasoline plants.

(*viii*) Section (Q)(3), Bulk gasoline terminals.

(*ix*) Section (R)(3), Gasoline dispensing facilities.

(*x*) Sections (U)(1) and the exemptions contained in (2)(h), Surface coating miscellaneous metal parts and products.

(*xi*) Sections (X)(1) (a)(i), (b)(i), and the exemption contained in (2)(d), Rubber tire manufacturing.

(*xii*) Sections (Z)(1)(b) through (h), (2), and (3), Storage of petroleum liquid in external floating roof tanks. NOTE: USEPA is not approving (Z)(1)(a).

(*xiii*) Section (AA) (1) and (2) (b) and (c), Dry cleaning facility. NOTE: USEPA is not proposing to approve (AA)(2)(a).

(*xiv*) Sections (K)(4) (a), (b), and (c), for the Whirlpool Corporation plants located in Marion, Sandusky, and Hancock Counties.

(*xv*) Section (X)(2)(d), Cooper Tire and Rubber tire manufacturing facility located in Hancock County.

(4) Rule 3745–21–10; Compliance test methods and procedures.

(i) Sections (A) (3) and (4), General provisions.

(ii) Section (B) (3), (4) and (5), Methods for determining VOC content of surface coating and inks.

(iii) Section (E) (4) and (7), Method for determining VOC emissions from bulk gasoline terminals.

(iv) Section (K), Methods for detecting leaks of gasoline vapors.

(74)—(75) [Reserved]

(76) On April 9, 1986, the State of Ohio submitted a negative declaration for natural gas/gasoline processing plants and manufacturers of high-density polyethylene and polypropylene resins.

(i) Incorporation by reference.

(A) Letter dated April 9, 1986, from Warren W. Tyler, Director, State of Ohio Environmental Protection Agency.

(77) On November 20, 1985, the Ohio Environmental Protection Agency submitted a revision to the State Implementation Plan for Total Suspended Particulates. This revision request is for operating permits for the following two shiploading facilities: The Andersons Grain Division, Toledo Plant and Mid–States Terminals, Incorporated.

(i) Incorporation by reference.

(A) Permit to Operate an Air Contaminant Source for the Andersons Grain Division, Toledo Plant. Date of Issuance: November 18, 1985.

(B) Permit to Operate an Air Contaminant Source for Mid–States Terminals, Incorporated. Date of Issuance: November 18, 1985.

(78) On April 30, 1986, (draft) and on May 5, 1987, (final) the Ohio Environmental Protection Agency (OEPA) submitted a revision request to Ohio's sulfur dioxide SIP. The revision was in the form of Permits to Operate for the Coulton Chemical Plant in Toledo,

Ohio, and the E.I. duPont de Nemours and Company facility in Miami, Ohio. The permits require the installation and operation of continuous emission monitors for sulfur dioxide at these facilities, and the reporting of monitoring data.

(i) Incorporation by reference.

(A) Special Term and Condition No. 3 of Permit to Operation No. 0448020014P001 for Coulton Chemical Corporation, effective January 3, 1986, Permit to Operate No. 0448020014P002 for Coulton Chemical Corporation, effective March 25, 1986.

(B) Special Term and Condition No. 3 of Permit to Operate No. 1431350817P001 for E.I. duPont de Nemours and Company (Fort Hill Plant), effective March 2, 1984.

(ii) Additional material.

(A) September 5, 1985, letter from Charles M. Taylor, Chief, Division of Air Pollution Control, Ohio Environmental Protection Agency; to Steve Rothblatt, Chief, Air and Radiation Branch, U.S. Environmental Protection Agency.

(79) On April 9, 1986, the Ohio Environmental Protection Agency (OEPA) submitted a request for a revision to the Ozone State Implementation Plan (SIP) for the Huffy Corporation in Celina Ohio (Mercer County). This revision was in the form of a rule which is applicable to the Huffy Corporation in Mercer County.

(i) Incorporation by reference.

(A) Ohio Administrative Code (OAC) Rule 3745–21–09(U)(2)(j), effective May 9, 1986.

(80) On April 9, 1986, the Ohio Environmental Protection Agency submitted a revision to the State Implementation Plan for ozone. The revision consists of the reasonably available control technology (RACT) III volatile organic compound regulations.

(i) Incorporation by reference. Ohio EPA OAC

(A) Rule 3745–21–01, Definitions. Paragraphs (K), (L), (M), and (N), effective May 9, 1986. Ohio EPA OAC

(B) Rule 3745–21–04, Attainment Dates and Compliance Time Schedules. Paragraphs (B)(1), and (C)(36) through (C)(39), effective May 9, 1986. Ohio EPA OAC

(C) Rule 3745–21–09, Control of Emissions of Volatile Organic Compounds from Stationary Sources. Paragraphs (A)(1), (A)(2), (A)(4), (BB), (CC), (DD), (EE), and Appendix A, effective May 9, 1986. Ohio EPA OAC

(D) Rule 3745–21–10, Compliance Test Method and Procedures. Paragraphs (C), (F), (L), (M), (N), (O), and (P), effective May 9, 1986.

(81) On March 3, 1986, the Ohio Environmental Protection Agency (OEPA) submitted Good Engineering Stack Height Regulations as a revision to the Ohio State Implementation Plan (SIP).

(i) Incorporation by reference.

(A) Ohio Administrative Code Chapter 3745–16–01 and 02, entitled ''Definitions'' and ''Good Engineering Practice Stack Height Regulations''. These rules were adopted by the State on February 12, 1986 and were effective on March 5, 1986.

(B) September 2, 1987 letter from Richard L. Shank, Ph.D., Director, Ohio Environmental Protection Agency; to Valdas Adamkus, Regional Administrator, USEPA.

(ii) Additional material.

(A) March 3, 1986, letter from Warren W. Tyler, Director, Ohio Environmental Protection Agency; to Valdas Adamkus, Regional Administrator, U.S. EPA.

(82) On November 7, 1985, the Ohio Environmental Protection Agency submitted a revision to the ozone portion of the Ohio State Implementation Plan (SIP) for the Reynolds Metal Company in Pickaway County, Ohio. This variance shall expire on May 6, 1992.

(i) Incorporation by reference.

(A) State of Ohio Environmental Protection Agency Variance to Operate an Air Contaminant Source (except for Conditions No. 2, No. 3, and No. 6); Date of Issuance: October 29, 1985, Issued to: Reynolds Metal Company; Constitutes a Variance to Operate: miscellaneous metal parts coating line—Ransburg Disc spray booths No. 1 and No. 2; and signed by Warren W. Tyler, Director, Ohio Environmental Protection Agency.

(83) On October 4, 1982, and January 24, 1983, the Ohio Environmental Protection Agency (OEPA) submitted revisions to the Ohio Administrative Code (OAC) Chapter 3745–31–01 through 3745–

31–08 to satisfy the New Source Review conditional approval of October 31, 1980 (45 FR 72119). U.S. EPA is granting limited approval of the revision to Ohio's New Source Review State Implementation Plan (SIP) because the revised regulations strengthen the SIP.

(i) Incorporation by reference.

(A) OAC Rule 3745–31 through 3745–31–03—Permits to Install New Sources of Pollution (Adopted June 30, 1982, effective August 15, 1982), as found in the State of Ohio Environmental Protection Agency Laws and Regulations.

(ii) Additional material.

(A) A June 30, 1987, letter from OEPA certified that the State did not rely upon additional reductions through the offset policy to attain or maintain the National Ambient Air Quality Standards.

(84) On June 1, 1987, the Ohio Environmental Protection Agency (OEPA) submitted a revision request to Ohio's ozone SIP for the Goodyear Tire and Rubber Company in St. Marys (Auglaize County) Ohio. The revision was in the form of variances for adhesive application lines K001 to K019 and exempts them from the requirements contained in Ohio Administrative Code (OAC) Rule 3745–21–09(U). These variances expire on (3 years and 30 days from date of publication). The accommodative SIP for Auglaize County is removed for the period these variances are in effect.

(i) Incorporation by reference. (A) Condition Number 8 (which references Special Terms and Conditions Numbers 1 through 5) within each of 19 ''State of Ohio Environmental Protection Agency Variances to Operate An Air Contaminant Source'', Application Numbers 0306010138K001–0306010138K019, for Goodyear Tire and Rubber Company. The Date of Issuance is May 22, 1987.

(85) On February 17, 1988, and January 4, 1989, the Ohio Environmental Protection Agency submitted a revision to the total suspended particulate SIP for Youngstown Thermal Corporation located in Youngstown, Ohio. This revision establishes a 0.02 lb/MMBTU emission limit for the one gas and Number 2 oil-fired boiler (B001) and a 0.14 lb/MMBTU limit for the three coal-fired boilers (B002, B003, and B004).

(i) Incorporation by reference. (A) Ohio Administrative Code (OAC) Rule 3745–17–01, effective in Ohio on October 1, 1983; Rule 3745–17–03, effective in Ohio on October 15, 1983; and Rule 3745–17–10, effective in Ohio on October 1, 1983, as they apply to Youngstown Thermal Energy Corporation in Youngstown, Ohio only.

(86) [Reserved]

(87) On July 11, 1988, Ohio submitted its vehicle inspection and maintenance regulation for Cuyahoga, Lake, Lorain, Hamilton, and Butler Counties.

(i) Incorporation by reference.

(A) Ohio Administrative Code rules 3745–26–01, 3745–26–02, 3745–26–03, 3745–26–04, 3745–26–05, 3745–26–06, 3745–26–07, 3745–26–08, and 3745–26–09, effective July 17, 1987.

(88) On April 11, 1994, the Ohio Environmental Protection Agency submitted a request for a revision to the Ohio State Implementation Plan for particulate matter and nitrogen oxides for specified source categories that require continuous emissions monitoring, recording, and reporting.

(i) Incorporation by reference.

(A) Special Terms and Conditions No. 4 of State of Ohio Environmental Protection Agency Permits to Operate an Air Contaminant Source, Application Numbers 1413100008 B002 and 1413100008 B005 for Cincinnati Gas and Electric (CG&E) Company, W. C. Beckjord Station. The dates of issuance are July 16, 1992. These permits are approved through the expiration date of July 15, 1995.

(B) Special Terms and Conditions No. 4 of State of Ohio Environmental Protection Agency Permits to Operate an Air Contaminant Source, Application Numbers 1413100008 B003 and 1413100008 B006 for Cincinnati Gas and Electric Company, W. C. Beckjord Station. The dates of issuance are November 13, 1992. These permits are approved through the expiration date of November 12, 1995.

(C) Special Terms and Conditions No. 5 of State of Ohio Environmental Protection Agency Permits to Operate an Air Contaminant Source, Application Numbers 1431350093 B005 and 1431350093 B006 for Cincinnati Gas and Electric Company, Miami Fort. The dates of issuance are September 3, 1993. These

permits are approved through the expiration date of September 1, 1996.

(D) Special Terms and Conditions No. 5 of State of Ohio Environmental Protection Agency Permit to Operate an Air Contaminant Source, Application Number 1431350093 B007 for Cincinnati Gas and Electric Company, Miami Fort. The date of issuance is November 19, 1993. This permit is approved through the expiration date of November 18, 1996.

(E) Special Terms and Conditions No. 3 of State of Ohio Environmental Protection Agency Permits to Operate an Air Contaminant Source, Application Numbers 0204000211 B001 and 0204000211 B003 for Cleveland Electric Illuminating Company, Ashtabula Plant ''C''. The dates of issuance are April 24, 1992. These permits are approved through the expiration date of April 23, 1995.

(F) Special Terms and Conditions No. 6 of State of Ohio Environmental Protection Agency Permit to Operate an Air Contaminant Source, Application Number 1318000245 B006 for Cleveland Electric Illuminating Company, Lakeshore Plant. The date of issuance is December 7, 1993. This permit is approved through the expiration date of December 6, 1996.

(G) Special Terms and Conditions No. 5 of State of Ohio Environmental Protection Agency Permit to Operate an Air Contaminant Source, Application Number 0616000000 B004 for Columbus Southern Power Company, Conesville Station. The date of issuance is December 4, 1992. This permit is approved through the expiration date of December 3, 1995.

(H) Special Terms and Conditions No. 4 of State of Ohio Environmental Protection Agency Permits to Operate an Air Contaminant Source, Application Numbers 0616000000 B001 and 0616000000 B002 for Columbus Southern Power Company, Conesville Station. The dates of issuance are June 22, 1993. These permits are approved through the expiration date of June 21, 1996.

(I) Special Terms and Conditions No. 4 of State of Ohio Environmental Protection Agency Permit to Operate an Air Contaminant Source, Application Number 0616000000 B003 for Columbus Southern Power Company, Conesville Station. The date of issuance is June 29, 1993. This permit is approved through the expiration date of June 28, 1996.

(J) Special Terms and Conditions No. 4 of State of Ohio Environmental Protection Agency Permits to Operate an Air Contaminant Source, Application Numbers 0701000007 B001 through 0701000007 B004 for Dayton Power and Light Company, J. M. Stuart Station. The dates of issuance are July 6, 1993. These permits are approved through the expiration date of July 5, 1996.

(K) Special Terms and Conditions No. 4 of State of Ohio Environmental Protection Agency Permit to Operate an Air Contaminant Source, Application Number 1707130015 B005 for Ohio Edison Company, R. E. Burger Plant. The date of issuance is July 30, 1993. This permit is approved through the expiration date of July 29, 1996.

(L) Special Terms and Conditions No. 4 of State of Ohio Environmental Protection Agency Permits to Operate an Air Contaminant Source, Application Numbers 1707130015 B006 through 1707130015 B008, and Application Numbers 1707130015 B011 and B012 for Ohio Edison Company, R. E. Burger Plant. The dates of issuance are August 3, 1993. These permits are approved through the expiration date of August 2, 1996.

(M) Special Terms and Conditions No. 4 of State of Ohio Environmental Protection Agency Permits to Operate an Air Contaminant Source, Application Numbers 1707130015 B009 and 1707130015 B010 for Ohio Edison Company, R. E. Burger Plant. The dates of issuance are October 8, 1993. These permits are approved through the expiration date of October 7, 1996.

(N) Special Terms and Conditions No. 6 of State of Ohio Environmental Protection Agency Permit to Operate an Air Contaminant Source, Application Number 1741180018 B001 for Ohio Edison Company, Toronto Plant. The date of issuance is March 5, 1993. This permit is approved through the expiration date of March 4, 1996.

(O) Special Terms and Conditions No. 6 of State of Ohio Environmental Protection Agency Permit to Operate an Air Contaminant Source, Application Number 1741180018 B001 for Ohio Edison Company, Toronto Plant. The date of

issuance is March 5, 1993. This permit is approved through the expiration date of March 4, 1996.

(P) Special Terms and Conditions No. 4 of State of Ohio Environmental Protection Agency Permit to Operate an Air Contaminant Source, Application Number 1741180018 B002 for Ohio Edison Company, Toronto Plant. The date of issuance is October 15, 1993. This permit is approved through the expiration date of October 24, 1996.

(Q) Special Terms and Conditions No. 4 of State of Ohio Environmental Protection Agency Permit to Operate an Air Contaminant Source, Application Number 1741180018 B003 for Ohio Edison Company, Toronto Plant. The date of issuance is November 23, 1992. This permit is approved through the expiration date of November 22, 1995.

(R) Special Terms and Conditions No. 4 of State of Ohio Environmental Protection Agency Permits to Operate an Air Contaminant Source, Application Numbers 1741160017 B007 and B008, 1741160017 B010 and 1741160017 B013 for Ohio Edison Company, Sammis Plant. The dates of issuance are March 10, 1993. These permits are approved through the expiration date of March 9, 1996.

(S) Special Terms and Conditions No. 3 of State of Ohio Environmental Protection Agency Permit to Operate an Air Contaminant Source, Application Number 1741160017 B009 for Ohio Edison Company, Sammis Plant. The date of issuance is June 25, 1993. This permit is approved through the expiration date of June 24, 1996.

(T) Special Terms and Conditions No. 6 of State of Ohio Environmental Protection Agency Permit to Operate an Air Contaminant Source, Application Number 0247080049 B003 for Ohio Edison Company, Edgewater Plant. The date of issuance is February 25, 1994. This permit is approved through the expiration date of February 25, 1997.

(U) Special Terms and Conditions No. 4 of State of Ohio Environmental Protection Agency Permits to Operate an Air Contaminant Source, Application Numbers 0627010056 B003 and 0627010056 B004 for Ohio Power Company, General James M. Gavin Plant. Thes date of issuance are May 2, 1992. These permits are approved through the expiration date of April 30, 1995.

(V) Special Terms and Conditions No. 5 of State of Ohio Environmental Protection Agency Permit to Operate an Air Contaminant Source, Application Number 1741050002 B001 for Ohio Power Company, Cardinal Operating Company. The date of issuance is March 30, 1993. This permit is approved through the expiration date of March 29, 1996.

(W) Special Terms and Conditions No. 4 of State of Ohio Environmental Protection Agency Permit to Operate an Air Contaminant Source, Application Number 1741050002 B002 for Ohio Power Company, Cardinal Operating Company. The date of issuance is November 12, 1993. This permit is approved through the expiration date of November 11, 1996.

(X) Special Terms and Conditions No. 4 of State of Ohio Environmental Protection Agency Permit to Operate an Air Contaminant Source, Application Number 1741050129 B002 for Ohio Power Company, Buckeye Power, Inc. The date of issuance is October 10, 1992. This permit is approved through the expiration date of October 19, 1995.

(Y) Special Terms and Conditions No. 4 of State of Ohio Environmental Protection Agency Permits to Operate an Air Contaminant Source, Application Numbers 0684000000 B002, 0684000000 B003, 0684000000 B004, and 0684000000 B005 for Ohio Power Company, Muskingum River Plant. The dates of issuance are May 12, 1993. These permits are approved through the expiration date of May 11, 1996.

(Z) Special Terms and Conditions No. 4 of State of Ohio Environmental Protection Agency Permit to Operate an Air Contaminant Source, Application Number 0684000000 B006 for Ohio Power Company, Muskingum River Plant. The date of issuance is April 20, 1993. This permit is approved through the expiration date of April 19, 1996.

(AA) Special Terms and Conditions No. 5 of State of Ohio Environmental Protection Agency Permit to Operate an Air Contaminant Source, Application Number 0285010188 B001 for Orrville Municipal Power Plant. The date of issuance is November 13, 1991. This permit is approved through the expiration date of November 14, 1994.

(BB) Special Terms and Conditions No. 4 of State of Ohio Environmental Protection Agency Permit to Operate an Air Contaminant Source, Application Number 028501018 B004 for Orrville Muniticpal Power Plant. The date of issuance is January 22, 1993. This permit is approved through the expiration date of January 21, 1996.

(CC) Special Terms and Conditions No. 5 of State of Ohio Environmental Protection Agency Permits to Operate an Air Contaminant Source, Application Numbers 0855100041 B001 and 0855100041 B002 for Piqua Municipal Power Plant. The dates of issuance are April 10, 1992. These permits are approved through the expiration date of April 9, 1995.

(DD) Special Terms and Conditions No. 5 of State of Ohio Environmental Protection Agency Permit to Operate an Air Contaminant Source, Application Number 0855100041 B003 for Piqua Municipal Power Plant. The date of issuance is April 12, 1993. This permit is approved through the expiration date of April 11, 1996.

(EE) Special Terms and Conditions No. 4 of State of Ohio Environmental Protection Agency Permits to Operate an Air Contaminant Source, Application Numbers 0684020037 B001 and 0684020037 B003 for American Municipal Power-Ohio, Inc. The dates of issuance are October 12, 1993. These permits are approved through the expiration date of October 11, 1996.

(FF) Special Terms and Conditions No. 4 of State of Ohio Environmental Protection Agency Permit to Operate an Air Contaminant Source, Application Number 0684020037 B002 for American Municipal Power-Ohio, Inc. The date of issuance is November 30, 1993. This permit is approved through the expiration date of November 29, 1996.

(GG) Special Terms and Conditions No. 8 of State of Ohio Environmental Protection Agency Permit to Operate an Air Contaminant Source, Application Number 1431390903 B022 for Procter and Gamble Company. The date of issuance is December 4, 1992. This permit is approved through the expiration date of December 3, 1995.

(HH) Special Terms and Conditions No. 6 of State of Ohio Environmental Protection Agency Permit to Operate Number 1409040212 B010 for Champion International, Hamilton Mill. The date of issuance is November 8, 1991. This permit is approved through the expiration date of November 7, 1994.

(II) Special Terms and Conditions Nos. 3 and 4 of State of Ohio Environmental Protection Agency Permit to Operate an Air Contaminant Source, Appplication Number 0448020007 P007 for BP Oil Company–Toledo Refinery. The date of issuance is March 27, 1992. This permit is approved through the expiration date of March 26, 1995.

(JJ) Special Terms and Conditions No. 3 of State of Ohio Environmental Protection Agency Permit to Operate Number an Air Contaminant Source, Application Number 1576000301 P002 for Ashland Petroleum Company. The date of issuance is January 21, 1993. This permit is approved through the expiration date of January 21, 1996.

(ii) Additional material.

(A) Letter dated April 11, 1994 from Donald R. Schregardus, Director, Ohio Environmental Protection Agency to Valdas V. Adamkus, Regional Administrator, United States Environmental Protection Agency, Region 5. The letter states that the public hearing for the SIP revision which was held on November 13, 1986 included the negative declaration regarding existing nitric acid plants (Section 2.2 of Appendix P).

(89) On February 28, 1989, the Ohio Environmental Protection Agency (OEPA) submitted a revision request to Ohio's ozone SIP for the Navistar International Transportation Corporation in Springfield, Ohio. It modified this request on March 30, 1990. The revision is in the form of variances for miscellaneous metal parts and products coating lines and exempts them from the requirements contained in Ohio Administrative Code (OAC) Rule 3745–21–09(U). These variances expire on January 4, 1994.

(i) Incorporation by reference.

(A) Condition Number 8 (which references Special Terms and Conditions Number 1 through 11) within both of the ''State of Ohio Environmental Protection Agency Variances to Operate An Air Contaminant Source'', Application Numbers 0812760220K009 and 0812760220K013 for Navistar International Transportation Corporation.

The Date of Issuance is February 28, 1989.

(90) On April 9, 1986, the Ohio Environmental Protection Agency (OEPA) submitted amendments to the Ohio Administrative Code (OAC) Chapter 3745–21. The amendments are embodied in the following OAC regulations: Definitions, Rule 3745–21–01; Attainment dates and compliance time schedules, Rule 3745–21–04; Control of emissions of volatile organic compounds from stationary sources, Rule 3745–21–09; and Compliance test methods and procedures, Rule 3745–21–10. USEPA is approving these amendments with the following exceptions: The proposed relaxation for food can end sealing compounds in 3745–21–09(D)(1)(e) and (D)(2)(e) (from 3.7 to 4.4 lbs VOC/gallon); the proposed revision to the exemption in 3745–21–09(N)(3)(e) for the application by hand of any cutback asphalt or emulsified asphalt for patching or crack sealing; the recordkeeping requirements in 3745–21–09(N)(4); the relaxation from 3.5 to 6.2 lbs VOC/gallon for high performance architectural aluminum coatings in 3745–21–09(U)(1)(a)(viii); the exemption for new sources in 3745–21–09(U)(2)(f); and the relaxation for miscellaneous metals coatings in 3745–21–09(U)(1)(a)(vii).

(i) Incorporation by reference.

(A) Amendments to Ohio Administrative Code Rule 3745–21–01, effective on May 9, 1986.

(B) Amendments to Ohio Administrative Code Rule 3745–21–04, effective on May 9, 1986.

(C) Amendments to Ohio Administrative Code Rule 3745–21–09, effective on May 9, 1986, except for:

(*1*) 3745–21–09(D)(1)(e) and (D)(2)(e) (proposed relaxation for food can end sealing);

(*2*) 3745–21–09(N)(3)(e) (proposed revision to the exemption for the application by hand of any cutback or emulsified asphalt for patching crack sealing);

(*3*) 3745–21–09(N)(4) (recordkeeping requirements);

(*4*) 3745–21–09(U)(1)(a)(viii) (relaxation from 3.5 to 6.2 lbs VOC. gal for high performance architectural aluminum coatings);

(*5*) 3745–21–09(U)(2)(f) (the exemption for new sources); and

(*6*) 3745–21–09(U)(1)(a)(vii) (relaxation for miscellaneous metal coatings).

(D) Amendments to Ohio Administrative Code Rule 3745–21–10, effective May 9, 1996.

(91) On September 30, 1983, the Ohio Environmental Protection Agency (OEPA) submitted a revision request to the ozone SIP for Ludlow Flexible Packaging, Inc. (Ludlow), located in Mt. Vernon (Knox County), Ohio. This revision was in the form of variances and permits that established a bubble with monthly averaging between 22 paper coating and printing lines (sources K001–K022) and a compliance date extension to June 30, 1987. On January 13, 1987, the OEPA submitted additional information concerning this revision stating that several of the printing lines have been or will be permanently shut down and the remaining lines will be controlled by thermal incineration in accordance with OAC Rule 3745–21–09(Y). In addition, four of the paper coating lines (K017–K019, K022) have been removed from the plant. Therefore, only eight paper coating lines (K011–K016, K020 and K021) remain under the bubble. This revision exempts these lines from the control requirements contained in Ohio Administrative Code (OAC) Rules 3745–21–09(F) and 3745–21–09(Y). These variances and permits expire on April 22, 1996.

The accommodative SIP for Knox County will be canceled upon approval of this SIP revision.

(i) Incorporation by reference.

(A) Condition Number 8 (which references Special Terms and Conditions Numbers 1–7 within each of the 5 ''State of Ohio Environmental Protection Agency Variance to Operate an Air Contaminant Source,'' Application Numbers 0342010111K011–0342010111K015, as they apply to Ludlow Flexible Packaging, Inc., located in Mt. Vernon, Ohio. The Date of Issuance is September 23, 1983.

(B) Condition Number 8 (which references Special Terms and Conditions Numbers 1–7) within each of the 3 ''State of Ohio Environmental Protection Agency Permit to Operate an Air Contaminant Source,'' Application Numbers 0342010111K016, 0342010111K020,

and 0342010111K021, as they apply to Ludlow Flexible Packaging, Inc., located in Mt. Vernon, Ohio. The Date of Issuance is September 23, 1983.

(ii) Additional material.

(A) January 13, 1987, letter from Patricia P. Walling, Chief, Division of Air Pollution Control, Ohio Environmental Protection Agency; to Steve Rothblatt, Chief, Air and Radiation Branch, U.S. Environmental Protection agency.

(92) On October 16, 1991, and March 17, 1993, the Ohio Environmental Protection Agency (OEPA) submitted revisions to the State Implementation Plan for sulfur dioxide for sources in Hamilton County, Ohio.

(i) Incorporation by reference.

(A) Ohio Administrative Code (OAC) Rule 3745–18–03 Attainment dates and compliance time schedules, Sections (A)(2)(c); (B)(7)(a); (B)(7)(b); (C)(8)(a); (C)(8)(b); (C)(9)(a); (C)(9)(b); (D)(1); (D)(2); dated October 11, 1991, and effective on October 31, 1991.

(B) Ohio Administrative Code (OAC) Rule 3745–18–04 Measurement methods and procedures, Sections (D)(7); (D)(8)(a) to (D)(8)(e); (E)(5); (E)(6)(a); (E)(6)(b); (F); (G)(1) to (G)(4); (I); dated October 11, 1991, and effective on October 31, 1991.

(C) Ohio Administrative Code (OAC) Rule 3745–18–37, Hamilton county emission limits, dated February 22, 1993, and effective on March 10, 1993.

(D) Director's Final Findings and Order for Cincinnati Gas and Electric Company, Miami Fort Station, dated February 22, 1993.

(93) In a letter dated October 16, 1992, the OEPA submitted a revision to the Carbon Monoxide State Implementation Plan for Cuyahoga County. This revision contains a maintenance plan that the area will use to maintain the CO NAAQS. The maintenance plan contains an oxygenated fuels program as a contingency measure to be implemented if the area violates the CO NAAQS.

(i) Incorporation by reference.

(A) Letter dated October 16, 1992, from Donald R. Schregardus, Director, Ohio Environmental Protection Agency to Valdas Adamkus, Regional Administrator, U.S. Environmental Protection Agency, Region 5 and its enclosures entitled ''Table 1 Cuyahoga County Carbon Monoxide Emission Inventory'', Enclosure B ''Cuyahoga County carbon monoxide SIP submittal'', and section 6.0 of Enclosure C ''Cuyahoga County Carbon Monoxide Modeling Study Final Report.''

(ii) Additional information.

(A) Letter dated January 14, 1993, from Donald R. Schregardus, Director, Ohio Environmental Protection Agency to Valdas Adamkus, Regional Administrator, U.S. Environmental Protection Agency, Region 5.

(B) Letter dated February 10, 1993, from Robert F. Hodanbosi, Chief, Division of Air Pollution Control, Ohio Environmental Protection Agency to David Kee, Director, Air and Radiation Division, U.S. Environmental Protection Agency, Region 5.

(C) Letter dated July 29, 1993, from Robert F. Hodanbosi, Chief, Division of Air Pollution Control, Ohio Environmental Protection Agency to David Kee, Director, Air and Radiation Division, U.S. Environmental Protection Agency, Region 5.

(94) On June 24, 1985, the Ohio Environmental Protection Agency submitted revisions to its ozone control State Implementation Plan which would establish a volatile organic compounds (VOC) bubble and alternative VOC reasonably available control technology for vinyl and U-frame vinyl coating lines at Columbus Coated Fabrics in Franklin County, Ohio.

(i) Incorporation by reference.

(A) Condition Number 8 (which references special Terms and Conditions Numbers 1 through 7) within each of 15 State of Ohio Environmental Protection Agency Permits and Variances to Operate an Air Contaminant Source, Application Numbers 0125040031 K001 through 0125040031 K015 for Columbus Coated Fabrics. The date of issuance is November 2, 1983. These permits and variances are approved for the period 12/12/85 to 1/6/92.

(B) Condition Number 8 (which references special Terms and Conditions Numbers 1 through 4) within each of 11 State of Ohio Environmental Protection Agency Variances to Operate an Air Contaminant Source, Application Numbers 0125040031 K016 through 0125040031 K026 for Columbus Coated

Fabrics. The date of issuance is November 2, 1983. These variances are approved for the period 4/1/82 to 1/6/92.

(C) State of Ohio Environmental Protection Agency Orders to Modify Variances to Operate modifying Special Condition Number 1 of Ohio Environmental Protection Agency Variances to Operate an Air Contaminant Source, Application Numbers 0125040031 K016 through 0125040031 K026 for Columbus Coated Fabrics. The date of issuance is May 21, 1985. These orders are approved for the period 4/1/82 to 1/6/92.

(95) On October 16, 1992, the State of Ohio submitted the tailpipe test inspection and maintenance program revisions to its carbon monoxide implementation plan for Cuyahoga County.

(i) Incorporation by reference.

(A) Ohio Administrative Code: amended rules, 3745–26–01 through 3745–26–09, effective May 15, 1990, and new rules, 3745–26–10 and 3745–26–11, effective May 15, 1990.

(ii) Additional materials–remainder of the State submittal.

(A) Letter from the Director, Ohio Environmental Protection Agency, dated November 18, 1992, and additional materials.

(96) On June 9, 1988, and August 24, 1990, the Ohio Environmental Protection Agency (OEPA) submitted revisions to the State Implementation Plan for ozone. The revisions consist of new non-Control Technique Guideline volatile organic compound (VOC) rules and corrections to existing VOC rules.

(i) Incorporation by reference.

(A) OEPA Ohio Administrative Code (OAC) Rule 3745–21–01, Definitions, Paragraphs (A), (B), (C), (D)(1) through (5), (D)(7), (D)(9) through (62), (E) through (S); effective August 22, 1990.

(B) OEPA OAC Rule 3745–21–04, Attainment Dates and Compliance Time Schedules, Paragraphs (A), (B), (C); effective August 22, 1990.

(C) OEPA OAC Rule 3745–21–09, Control of Emissions of Volatile Organic Compounds from Stationary Sources, Paragraphs (A), (B), (C) through (H), (J), (K), (M), (P), (S), (T), (V), (X), (Y), (BB), (CC), (FF) through (NN), (PP), effective August 22, 1990.

(D) OEPA OAC Rule 3745–21–10, Compliance Test Methods and Procedures, Paragraphs (B), (D), (F), (G), (I) through (N), (P); effective August 22, 1990.

(97) On November 14, 1991, December 4, 1991, and January 8, 1992, OEPA submitted revisions to its particulate matter plan, including Statewide rule revisions, rule revisions for specific facilities in Cuyahoga and Jefferson Counties, and supplemental materials to address the requirements of part D of title I of the Clean Air Act for the Cuyahoga and Jefferson County nonattainment areas. Rules 3745–17–03(B)(10)(c) and 3745–17–12(P)(6)(a) (concerning quench water limits) are not approved.

(i) Incorporation by reference.

(A) Rule 3745–17–01—Definitions, effective December 6, 1991.

(B) Rule 3745–17–02—Ambient air quality standards, effective June 14, 1991.

(C) Rule 3745–17–03—Measurement methods and procedures, effective December 6, 1991, except for paragraph (B)(10)(c) which is disapproved.

(D) Rule 3745–17–04—Compliance time schedules, effective December 6, 1991.

(E) Rule 3745–17–07—Control of visible particulate emissions from stationary sources, effective June 14, 1991.

(F) Rule 3745–17–08—Restriction of emission of fugitive dust, effective June 14, 1991.

(G) Rule 3745–17–09—Restrictions on particulate emissions and odors from incinerators, effective July 9, 1991.

(H) Rule 3745–17–10—Restrictions on particulate emissions from fuel burning equipment, effective June 14, 1991.

(I) Rule 3745–17–11—Restrictions on particulate emissions from industrial processes, effective June 14, 1991.

(J) Rule 3745–17–12—Additional restrictions on particulate emissions from specific air contaminant sources in Cuyahoga County, effective December 6, 1991, except for paragraph (P)(6)(a) which is disapproved.

(K) Rule 3745–17–13—Additional restrictions on particulate emissions from specific air contaminant sources in Jefferson County, effective December 6, 1991.

(L) Rule 3745–17–14—Contingency plan requirements for Cuyahoga and Jefferson Counties, effective December 6, 1991.

(M) Rule 3745–75–01—Applicability and definitions, effective July 9, 1991.

(N) Rule 3745–75–02—Emission limits, effective July 9, 1991.

(O) Rule 3745–75–03—Design parameters and operating restrictions, effective July 9, 1991.

(P) Rule 3745–75–04—Monitoring requirements, effective July 9, 1991.

(Q) Rule 3745–75–05—Recordkeeping, effective July 9, 1991.

(R) Rule 3745–75–06—Certification and compliance time schedules, effective July 9, 1991.

(ii) Additional information.

(A) Appendices A through P to a letter from Donald Schregardus to Valdas Adamkus dated November 14, 1991, providing emissions inventories and modeling demonstrations of attainment for the Cleveland and Steubenville areas and providing other related information.

(B) A letter from Donald Schregardus to Valdas Adamkus dated December 4, 1991, and attachments, supplementing the November 14, 1991, submittal.

(C) A letter from Donald Schregardus to Valdas Adamkus dated January 8, 1992, and attachments, supplementing the November 14, 1991, submittal.

(98) On April 20, 1994, and March 7, 1995, Ohio submitted Rule 3745–35–07, entitled ''Federally Enforceable Limitations on Potential to Emit,'' and requested authority to issue such limitations as conditions in State operating permits.

(i) Incorporation by reference. Rule 3745–35–07, adopted November 3, 1994, effective November 18, 1994.

(99) [Reserved]

(100) On March 22, 1994, the Ohio Environmental Protection Agency submitted a revision request to Ohio's ozone SIP for approval of the State's emissions statement program. The emissions statement program requirements apply to sources in the following counties: Ashtabula, Butler, Clark, Clermont, Cuyahoga, Delaware, Franklin, Geauga, Greene, Hamilton, Lake, Licking, Lorain, Lucas, Mahoning, Medina, Miami, Montgomery, Portage, Stark, Summit, Trumbull, Warren, and Wood.

(i) Incorporation by reference.

(A) Ohio Administrative Code rules 3745–24–01, 3745–24–02, 3745–24–03, and 3745–24–04, effective April 1, 1994.

(101) On November 12, 1993 the Ohio Environmental Protection Agency submitted a vehicle inspection and maintenance program in accordance with section 110 of the Clean Air Act as amended in 1990. The new program replaces I/M programs in operation in the Cleveland and Cincinnati areas and establishes new programs in Dayton and any area designated moderate nonattainment or any area where local planning authorities have requested the State to implement a program.

(i) Incorporation by reference.

(A) Ohio Administrative Code Amended Rules 3745–26–01, 3754–26–02, 3745–26–10, and rules 3745–26–12, 3745–26–13, and 3745–26–14, all made effective on June 13, 1994.

(ii) Other material.

(A) Certification letter from the Director of the Ohio Environmental Protection Agency regarding the State process in developing the I/M rules and the I/M program.

(B) Letter dated June 22, 1994, from the Director of OEPA regarding implementation of an I/M program in the Toledo area in the event the State's request for redesignation to attainment for that area is not approved by USEPA.

(102) On June 7, 1993, and February 17, 1995, the Ohio Environmental Protection Agency (OEPA) submitted revisions to the State Implementation Plan (SIP) for ozone. The revisions include 19 new non-Control Technique Guideline volatile organic compound (VOC) rules, Findings and Orders for 5 companies, and two permits to install.

(i) Incorporation by reference.

(A) OEPA OAC Rule 3745–21–01, Definitions, Paragraphs (Q); (T); effective January 17, 1995.

(B) OEPA OAC Rule 3745–21–04, Attainment Dates and Compliance Time Schedules, Paragraphs (C)(40); (C)(41); (C)(46); (C)(48); (C)(49); (C)(50); (C)(51); (C)(53); (C)(54); (C)(59); (C)(60); (C)(61); (C)(62); effective January 17, 1995.

(C) OEPA OAC Rule 3745–21–09, Control of Emissions of Volatile Organic Compounds from Stationary Sources, Paragraphs (FF), (GG), (HH), (II), (JJ), (KK), (LL), (MM), (NN), (OO), (PP),

(QQ), (SS), (TT), (YY), (ZZ), (AAA); (BBB); effective January 17, 1995.

(D) Director's Final Findings and Orders for AK Steel Corporation (Middletown), International Paper Company (Cincinnati), Midwest Mica & Insulation Company (Cleveland), Reilly Industries, Inc. (Cleveland), and Sprayon Products, Inc. (Bedford Heights), Issued by Ohio Environmental Protection Agency on August 18, 1995.

(E) Permit to Install, Application Number 13–2396, for Excello Specialty Company, APS Premise Number 1318607686. The date of issuance is December 11, 1991.

(F) Permit to Install, Application Number 14–2096, for Hilton Davis Company, APS Premise Number 1431070039. The date of issuance is June 12, 1991.

(103) On June 7, 1993, and February 17, 1995, the Ohio Environmental Protection Agency (OEPA) submitted revisions to the State Implementation Plan (SIP) for ozone. The revisions include one new non-Control Technique Guideline volatile organic compound (VOC) rule, corrections to existing VOC rules, and two permits-to-install.

(i) Incorporation by reference.

(A) OEPA Ohio Administrative Code (OAC) Rule 3745–21–01, Definitions, Paragraphs (B)(1), (B)(2), (B)(6), (D)(6), (D)(8), (D)(22), (D)(45), (D)(48), (D)(58), (M)(8); effective January 17, 1995.

(B) OEPA OAC Rule 3745–21–04, Attainment Dates and Compliance Time Schedules, Paragraphs (B), (C)(3)(c), (C)(4)(b), (C)(5)(b), (C)(6)(b), (C)(8) (b) and (c), (C)(9)(b), (C)(10)(b), (C)(19) (b), (c), and (d), (C)(28)(b), (C)(38), (C)(39), (C)(42), (C)(43), (C)(44), (C)(45), (C)(47), (C)(55), (C)(65); effective January 17, 1995.

(C) OEPA OAC Rule 3745–21–09, Control of Emissions of Volatile Organic Compounds from Stationary Sources, Paragraphs (A), (C) through (L), (N) through (T), (X), (Y), (Z), (BB), (CC), (DD), (UU), Appendix A; effective January 17, 1995.

(D) OEPA OAC Rule 3745–21–09, Control of Emissions of Volatile Organic Compounds from Stationary Sources, Paragraph (B) except (B)(3)(d) and (e) for the Ohio Counties of Ashtabula, Butler, Clermont, Cuyahoga, Geauga, Hamilton, Lake, Lorain, Medina, Portage, Summit, and Warren; effective January 17, 1995.

(E) OEPA OAC Rule 3745–21–09, Control of Emissions of Volatile Organic Compounds from Stationary Sources, Paragraph (U) except (U)(1)(h) statewide and (U)(2)(e)(ii) for the Ohio Counties of Ashtabula, Butler, Clermont, Cuyahoga, Geauga, Hamilton, Lake, Lorain, Medina, Portage, Summit, and Warren; effective January 17, 1995.

(F) OEPA OAC Rule 3745–21–10, Compliance Test Methods and Procedures, Paragraphs (A), (B), (C), (E), (O); effective January 17, 1995.

(G) Permit to Install, Application Number 04–204, for Abitibi-Price Corporation, APS Premise Number 0448011192. The date of issuance is July 7, 1983.

(H) Permit to Install, Application Number 08–3273, for General Motors Corporation Delco Chassis Division, APS Premise Number 0857040935. The date of issuance is February 13, 1995.

(ii) Additional material.

(A) On June 7, 1993, the OEPA submitted negative declarations for the source categories of polypropylene or high density polyethylene resin manufacturing, natural gas/gasoline processing plants, and surface coating of flat wood paneling. These negative declarations are approved into the Ohio ozone SIP.

(B) On February 21, 1995, the OEPA submitted a list of facilities subject to the post-enactment source categories listed in Appendix E to the General Preamble. 57 FR 18070, 18077 (April 28, 1992). This list is approved into the Ohio ozone SIP.

(104) On June 7, 1993, the Ohio Environmental Protection Agency (OEPA) submitted a revision request to Ohio's ozone SIP for approval of the State's Stage II vapor recovery program. The Stage II program requirements apply to sources in the following areas: Cincinnati-Hamilton; Cleveland-Akron-Lorain; and Dayton-Springfield.

(i) Incorporation by reference.

(A) OEPA Ohio Administrative Code (OAC) Rule 3745–21–04, Attainment Dates and Compliance Time Schedules, Paragraph (C)(64); effective date March 31, 1993.

(B) OEPA OAC Rule 3745–21–10, Compliance Test Methods and Procedures,

Paragraphs (Q), (R), (S), Appendices A, B, C; effective date March 31, 1993.

(105) On September 17, 1993, the Ohio Environmental Protection Agency requested the redesignation of Lucas and Wood Counties to attainment of the National Ambient Air Quality Standard for ozone. To meet the redesignation criteria set forth by section 107(d)(3)(E) (iii) and (iv), Ohio credited emissions reductions from the enclosure of the ''oily ditch'' at the British Petroleum Refinery in Oregon, Ohio. The USEPA is approving the Director's Finding and Order which requires the enclosure of the ''oily ditch'' into the SIP for Lucas and Wood Counties.

(i) Incorporation by reference.

(A) Letter dated June 2, 1994, from Donald R. Schregardus, Director, Ohio Environmental Protection Agency, to Valdas Adamkus, Regional Administrator, USEPA, Region 5, and one enclosure which is the revised Director's Final Findings and Orders in the matter of BP Oil company, Toledo Refinery, 4001 Cedar Point Road, Oregon, Ohio, Fugitive Emissions from the Refinery Waste Water System ''Oily Ditch'', effective June 2, 1994.

(106) On October 7, 1994, Ohio submitted four rules in Chapter 3745–71 of the Ohio Administrative Code, entitled ''Lead Emissions,'' and submitted a modeling demonstration that the limitations in these rules assure attainment of the lead standard in central Cleveland.

(i) Incorporation by reference. Rules 3745–71–01, 3745–71–03, 3745–71–05, and 3745–71–06, all adopted September 22, 1994, and effective October 4, 1994.

(ii) Additional material. A submittal letter from the Director of the Ohio Environmental Protection Agency, with attachments documenting a modeling analysis of lead concentrations near the Master Metals secondary lead smelter.

(107) Approval—On August 17, 1995, the Ohio Environmental Protection Agency submitted a revision to the State Implementation Plan for general conformity rules. The general conformity rules enable the State of Ohio to implement and enforce the Federal general conformity requirements in the nonattainment or maintenance areas at the State or local level in accordance with 40 CFR part 93, subpart B—Determining Conformity of General Federal Actions to State or Federal Implementation Plans.

(i) *Incorporation by reference.* August 1, 1995, Ohio Administrative Code Chapter 3745–102, effective August 21, 1995.

(108) [Reserved]

(109) On July 17, 1995, Ohio submitted a Particulate Matter (PM) contingency measures State Implementation Plan (SIP) revision request. The submittal includes Final Findings and Orders for 5 companies. The Findings and Orders provide PM emission reductions which will take effect if an area fails to attain the National Ambient Air Quality Standards for PM.

(i) Incorporation by reference.

Director's Final Findings and Orders for Ford Motor Company (Cleveland Casting Plant), T&B Foundry Company, International Mill Service, Luria Brothers, and United Ready Mix, issued by the Ohio Environmental Protection Agency on July 10, 1995.

(110) On November 3, 1995, December 21, 1995, and March 21, 1996, OEPA submitted revisions to its particulate matter plan, addressing prior deficiencies in its plans for Cuyahoga and Jefferson Counties.

(i) Incorporation by reference.

(A) Rule 3745–17–03—Rule 3745–17–03—Measurement methods and procedures, effective November 15, 1995.

(B) Rule 3745–17–04—Compliance time schedules, effective November 15, 1995.

(C) Rule 3745–17–12—Additional restrictions on particulate emissions from specific air contaminant sources in Cuyahoga County, effective November 15, 1995.

(D) Findings and Orders issued to the Wheeling-Pittsburgh Steel Corporation, signed by Donald Schregardus and effective on October 31, 1995.

(ii) Additional material—Dispersion modeling analyses for the Steubenville area and for Cuyahoga County near Ford's Cleveland Casting Plant.

[37 FR 10886, May 31, 1972]

EDITORIAL NOTE: For FEDERAL REGISTER citations affecting § 52.1870, see the List of CFR Sections Affected in the Finding Aids section of this volume.

EFFECTIVE DATE NOTE: 1. At 61 FR 20142, May 6, 1996, § 52.1870 was amended by adding paragraph (c)(109), effective July 5, 1996.

2. At 61 FR 24459, May 8, 1996, §52.1870 was amended by adding paragraph (c)(92), effective July 15, 1996.

3. At 61 FR 29663, June 12, 1996, §52.1870 was amended by adding paragraph (c)(110), effective July 12, 1996.

§52.1871 Classification of regions.

The Ohio plan was evaluated on the basis of the following classifications:

Air quality control region	Pollutant				
	Particulate matter	Sulfur oxides	Nitrogen dioxide	Carbon monoxide	Ozone
Greater Metropolitan Cleveland Intrastate	I	I	III	III	I
Huntington (West Virginia)-Ashland (Kentucky)-Portsmouth-Ironton (Ohio) Interstate	I	III	III	III	III
Mansfield-Marion Intrastate	II	II	III	III	III
Metropolitan Cincinnati Interstate	I	II	III	III	I
Metropolitan Columbus Intrastate	I	III	III	III	I
Metropolitan Dayton Intrastate	I	II	III	III	I
Metropolitan Toledo Interstate	I	I	III	III	I
Northwest Ohio Intrastate	II	I	III	III	III
Northwest Pennsylvania-Youngstown Interstate	I	II	III	III	III
Parkersburg (West Virginia)-Marietta (Ohio) Interstate	I	II	III	III	III
Sandusky Intrastate	III	III	III	III	III
Steubenville-Weirton-Wheeling Interstate	I	I	III	III	III
Wilmington-Chillicothe-Logan Intrastate	III	III	III	III	III
Zanesville-Cambridge Intrastate	II	IA	III	III	III

[37 FR 10886, May 31, 1972, as amended at 39 FR 16347, May 8, 1974; 45 FR 72146, Oct. 31, 1980]

§52.1872 [Reserved]

§52.1873 Approval status.

With the exceptions set forth in this subpart the Administrator approves Ohio's plan for the attainment and maintenance of the National Ambient Air Quality Standards under section 110 of the Clean Air Act. Furthermore, the Administrator finds the plan satisfies all the requirements of Part D, Title 1 of the Clean Air Act as amended in 1977, except as noted below. In addition, continued satisfaction of the requirements of Part D for the ozone portion of the SIP depends on the adoption and submittal of RACT requirements by January 1, 1981 for the sources covered by CTGs between January 1978 and January 1979 and adoption and submittal by each subsequent January of additional RACT requirements for sources covered by CTGs issued by the previous January.

[45 FR 72146, Oct. 31, 1980, as amended at 47 FR 28099, June 29, 1982]

§52.1874 [Reserved]

§52.1875 Attainment dates for achieving the sulfur dioxide secondary standard.

The attainment date for achieving the sulfur dioxide (SO_2) secondary national ambient air quality standard (NAAQS) is August 27, 1979 except as follows. The following sources are required to achieve the secondary SO_2 NAAQS by June 17, 1980: Youngstown Sheet & Tube Co.; PPG Industries, Inc.; Wheeling-Pittsburgh Steel Corp.; Pittsburgh-Canfield Corporation; The Timken Company; The Sun Oil Co.; Sheller-Globe Corp.; The B.F. Goodrich Company; Phillips Petroleum Co.; Shell Oil Co.; Federal Paper Board Co.; The Firestone Tire & Rubber Co.; Republic Steel Corp.; Chase Bag Co.; White-Westinghouse Corp.; U.S. Steel Corp.; Interlake, Inc.; Austin Power Co.; Diamond Crystal Salt Co.; The Goodyear Tire & Rubber Co.; The Gulf Oil Co.; The Standard Oil Co.; Champion International Corp.; Koppers Co., Inc.; General Motors Corp.; E.I. duPont de Nemours and Co.; Coulton Chemical Corp.; Allied Chemical Corp.; Specialty Chemical Division; The Hoover Co.;

Aluminum Co. of America; Ohio Greenhouse Asso.; Armco Steel Corp.; Buckeye Power, Inc.; Cincinnati Gas and Electric; Cleveland Electric Illuminating Co.; Columbus and Southern Ohio Electric; Dayton Power and Light Co.; Duquesne Light Co.; Ohio Edison Co.; Ohio Electric Co.; Pennsylvania Power Co.; Toledo Edison Co.; Ohio Edison Co.; RCA Rubber Co. The Ashland Oil Company is subject to a secondary SO_2 NAAQS attainment date of September 14, 1982. The following sources located in Summit County are required to achieve the secondary SO_2 NAAQS by January 4, 1983: Diamond Crystal Salt; Firestone Tire & Rubber Co.; General Tire & Rubber Co.; General Tire & Rubber; B.F. Goodrich Co.; Goodyear Aerospace Corp.; Goodyear Tire & Rubber Co.; Chrysler Corp.; PPG Industries Inc.; Seiberling Tire & Rubber; Terex Division of General Motors Corp.; Midwest Rubber Reclaiming; Kittinger Supply Co. The boiler of PPG Industries, Inc. located in Summit County must achieve attainment of the secondary SO_2 NAAQS by August 25, 1983. The Portsmouth Gaseous Diffusion Plant in Pike County is required to attain the secondary SO_2 NAAQS by November 5, 1984. The Ohio Power Company Galvin Plant located in Gallia County is required to attain the secondary SO_2 NAAQS by August 25, 1985.

[61 FR 16062, Apr. 11, 1996]

§ 52.1876 [Reserved]

§ 52.1877 Control strategy: Photochemical oxidants (hydrocarbons).

(a) The requirements of Subpart G of this chapter are not met because the Ohio plan does not provide for the attainment and maintenance of the national standard for photochemical oxidants (hydrocarbons) in the Metropolitan Cincinnati interstate region by May 31, 1975.

(b) The requirements of § 52.14 are not met by Rule 3745–21–09(N)(3) (a) and (e); Rule 3745–21–09(Z)(1)(a); Rule 3745–21–10, Section G; and Rule 3745–21–10, Section H, because these Ohio Rules do not provide for attainment and maintenance of the photochemical oxidant (hydrocarbon) standards throughout Ohio.

(1) USEPA is disapproving new exemptions for the use of cutback asphalt [(Rule 3745–21–09(N)(3) (a) and (e)], because Ohio did not provide documentation regarding the temperature ranges in the additional two months that the State permits the use of cutback asphalts, and a lack of training is not sufficient reason for the 1000 gallons exemptions.

(2) USEPA is disapproving Section V [Rule 3745–21–09(V)], because it contains an alternative leak testing procedure for gasoline tank trucks which USEPA finds to be unapprovable.

(3) USEPA is disapproving exclusion of the external floating roof (crude oil) storage tanks from the secondary seal requirement [Rule 3745–21–09(Z)(1)(a)], because Ohio has not demonstrated that the relaxation would not interfere with the timely attainment and maintenance of the NAAQS for ozone.

(4) USEPA is disapproving compliance test method Section G, [Rule 3745–21–10] as an alternative leak testing procedure for gasoline tank trucks, because such action on Section G, is consistent with USEPA's action on Rule 3745–21–09(V), which USEPA finds to be unapprovable.

(5) USEPA is disapproving compliance test method Section H, [Rule 3745–21–10], which involves a pressure test of only the vapor recovery lines and associated equipment. Compliance test method Section H is inconsistent with USEPA's control technique guidances and with tank truck certification regulations that are in effect in 19 other States. In addition, OEPA has presented no acceptable evidence demonstrating why this rule constitutes RACT.

[38 FR 30974, Nov. 8, 1973, as amended at 39 FR 13542, Apr. 15, 1974; 51 FR 40676, Nov. 7, 1986; 54 FR 1940, Jan. 18, 1989]

§ 52.1878 [Reserved]

§ 52.1879 Review of new sources and modifications.

(a) The requirements of sections 172, 173, 182, and 189 for permitting of major new sources and major modifications in nonattainment areas for ozone, particulate matter, sulfur dioxide, and carbon monoxide are not met, because Ohio's regulations exempt source categories which may not be exempted and because the State has not adopted

the new permitting requirements of the Clean Air Act Amendments of 1990 in a clear or enforceable manner.

(b) [Reserved]

(c) The requirements of § 51.161 of this chapter are not met because the State failed to submit procedures providing for public comment on review of new or modified stationary sources.

(d) Regulation providing for public comment. (1) For purposes of this paragraph, *Director* shall mean the *Director of the Ohio Environmental Protection Agency*.

(2) Prior to approval or disapproval of the construction or modification of a stationary source, the Director shall:

(i) Make a preliminary determination whether construction or modification of the stationary source should be approved, approved with conditions or disapproved;

(ii) Make available in at least one location in the region in which the proposed stationary source would be constructed or modified, a copy of all materials submitted by the owner or operator, a copy of the Director's preliminary determination, and a copy or summary of other materials, if any, considered by the Director in making his preliminary determination; and

(iii) Notify the public, by prominent advertisement in a newspaper of general circulation in the region in which the proposed stationary source would be constructed or modified, of the opportunity for public comment on the information submitted by the owner or operator and the Director's preliminary determination on the approvability of the new or modified stationary source.

(3) A copy of the notice required pursuant to this paragraph shall be sent to the Administrator through the appropriate regional office and to all other State and local air pollution control agencies having jurisdiction within the region where the stationary source will be constructed or modified.

(4) Public comments submitted in writing within 30 days of the date such information is made available shall be considered by the Director in making his final decision on the application.

(e) *Approval*—The USEPA is approving exemption requests submitted by the State of Ohio on March 18, November 1, and November 15, 1994, from the requirements contained in Section 182(f) of the Clean Air Act. This approval exempts the following counties in Ohio from the NO_X-related general and transportation conformity provisions; and nonattainment area NSR for new sources and modifications that are major for NO_X: Clinton, Columbiana, Delaware, Franklin, Jefferson, Licking, Mahoning, Preble, Stark, and Trumbull. This approval also exempts the following counties in Ohio from the NO_X-related general conformity provisions, nonattainment area NSR for new sources and modifications that are major for NO_X, NO_X RACT; and a demonstration of compliance with the enhanced I/M performance standard for NO_X: Ashtabula, Butler, Clermont, Cuyahoga, Geauga, Hamilton, Lake, Lorain, Medina, Portage, Summit and Warren. If, prior to redesignation to attainment, a violation of the ozone NAAQS is monitored in the Canton, Cincinnati, Cleveland, Columbus, Youngstown, and Steubenville areas, Preble County and Clinton County, the exemptions from the requirements of Section 182(f) of the Act in the applicable area(s) shall no longer apply.

(f) Approval—USEPA is approving two exemption requests submitted by the Ohio Environmental Protection Agency on September 20, 1993, and November 8, 1993, for the Toledo and Dayton ozone nonattainment areas, respectively, from the requirements contained in Section 182(f) of the Clean Air Act. This approval exempts the Lucas, Wood, Clark, Greene, Miami, and Montgomery Counties from the requirements to implement reasonably available control technology (RACT) for major sources of nitrogen oxides (NO_X), nonattainment area new source review (NSR) for new sources and modifications that are major for NO_X, and the NO_X-related requirements of the general and transportation conformity provisions. For the Dayton ozone nonattainment area, the Dayton local area has opted for an enhanced inspection and maintenance (I/M) programs. Upon final approval of this exemption, the Clark, Greene, Miami, and Montgomery Counties shall not be required to demonstrate compliance with the enhanced I/M performance standard for

NO_X. If a violation of the ozone NAAQS is monitored in the Toledo or Dayton area(s), the exemptions from the requirements of Section 182(f) of the Act in the applicable area(s) shall no longer apply.

[39 FR 13542, Apr. 15, 1974, as amended at 45 FR 72122, Oct. 31, 1980; 45 FR 82927, Dec. 17, 1980; 51 FR 40677, Nov. 7, 1986; 58 FR 47214, Sept. 8, 1993; 59 FR 48395, Sept. 21, 1994; 60 FR 3766, Jan. 19, 1995; 60 FR 36060, July 13, 1995]

§ 52.1880 Control strategy: Particulate matter.

(a) The requirements of subpart G of this chapter are not met because the Ohio plan does not provide for attainment and maintenance of the secondary standards for particulate matter in the Greater Metropolitan Cleveland Intrastate Region and the Ohio portions of the Northwest Pennsylvania-Youngstown and the Steubenville-Weirton-Wheeling Interstate Regions.

(b) In Pickaway County, Columbus and Southern Ohio Electric Company, or any subsequent owner or operator of the Picway Generating Station, shall not operate simultaneously Units 3 and 4 (boilers 7 and 8) at any time. These units will terminate operation no later than October 1, 1980.

(c) Ohio Regulation EP–12 (open burning) is disapproved insofar as EP–12–03(D)(1) and EP–12–04(D)(1) allow open burning of hazardous or toxic materials.

(d) Part D—Limited disapproval—Notwithstanding the approval of rules as specified in § 52.1870(c)(97), USEPA disapproves the plan for Cuyahoga County because the plan fails to require timely implementation of reasonably available control measures and fails to assure attainment, and USEPA disapproves the plan for Jefferson County because the plan fails to assure attainment.

(e)—(f) [Reserved]

(g) The B.F. Goodrich Chemical Plant State Implementation Plan revision is being disapproved because it is not supported by an adequate attainment demonstration and therefore does not meet the requirements of § 51.13(e).

(h) *Approval.* On January 4, 1989, the State of Ohio submitted a committal SIP for particulate matter with an aerodynamic diameter equal to or less than 10 micrometers (PM_{10}) for Ohio's Group II areas. The Group II areas of concern are in Belmont, Butler, Columbiana, Franklin, Hamilton, Lorain, Mahoning, Montgomery, Richland, Sandusky, Scioto, Seneca, Stark, Summit, Trumbull, and Wyandot Counties. The committal SIP contains all the requirements identified in the July 1, 1987, promulgation of the SIP requirements for PM_{10} at 52 FR 24681.

(i) Part D—Disapproval—Ohio's Part D TSP plan for the Middletown area is disapproved. Although USEPA is disapproving the plan, the emission limitations and other requirements in the federally approved SIP remain in effect. See § 52.1870(c)(27).

[39 FR 13542, Apr. 15, 1974, as amended at 43 FR 4259, Feb. 1, 1978; 43 FR 4611, Feb. 3, 1978; 43 FR 16736, Apr. 20, 1978; 46 FR 19472, Mar. 31, 1981; 46 FR 43423, Aug. 28, 1981; 49 FR 48544, Dec. 13, 1984; 50 FR 5250, Feb. 7, 1985; 51 FR 40676, Nov. 7, 1986; 55 FR 11371, Mar. 28, 1990; 55 FR 29846, July 23, 1990; 59 FR 27472, May 27, 1994]

§ 52.1881 Control strategy: Sulfur oxides (sulfur dioxide).

(a) USEPA is approving, disapproving or taking no action on various portions of the Ohio sulfur dioxide control plan as noticed below. The disapproved portions of the Ohio plan do not meet the requirements of § 51.13 of this chapter in that they do not provide for attainment and maintenance of the national standards for sulfur oxides (sulfur dioxide). (Where USEPA has approved the State's sulfur dioxide plan, those regulations supersede the federal sulfur dioxide plan contained in paragraph (b) of this section and § 52.1882.)

(1) Approval—USEPA approves the following OAC Rule: 3745–18–01 Definitions, 3745–18–02 Ambient Air Quality Standards–Sulfur Dioxide, 3745–18–05 Ambient and Meteorological Monitoring Requirements, 3745–18–06 General Emission Limit Provisions.

(2) Approval—USEPA approves the Ohio Rules 3745–18–03 Attainment Dates and Compliance Time Schedules except for those provisions listed in § 52.1881(a)(5).

(3) Approval–USEPA approves the Ohio Rules 3745–18–04 Emission Measurement Methods except for those provisions listed in § 52.1881(a)(6).

(4) Approval—USEPA approves the sulfur dioxide emission limits for the following counties:

Adams County (except Dayton Power & Light—Stuart), Allen County (except Cairo Chemical), Ashland County, Ashtabula County, Athens County, Auglaize County, Belmont County, Brown County, Carroll County, Champaign County, Clark County, Clermont County,(except Cincinnati Gas & Electric—Beckjord), Clinton County, Columbiana County, Coshocton County (except Columbus & Southern Ohio Electric—Conesville), Crawford County, Darke County, Defiance County, Delaware County, Erie County, Fairfield County, Fayette County, Fulton County, Gallia County, (except Ohio Valley Electric Company—Kyger Creek and Ohio Power—Gavin), Geauga County, Greene County, Guernsey County, Hamilton County, Hancock County, Hardin County, Harrison County, Henry County, Highland County, Hocking County, Holmes County, Huron County, Jackson County, Jefferson County, Knox County, Lake County (except Ohio Rubber, Cleveland Electric Illuminating Company—Eastlake, and Painesville Municipal Boiler #5), Lawrence County (except Allied Chemical—South Point), Licking County, Logan County, Lorain County (except Ohio Edison—Edgewater, Cleveland Electric Illuminating—Avon Lake, U.S. Steel—Lorain, and B.F. Goodrich), Lucas County (except Gulf Oil Company, Coulton Chemical Company, Phillips Chemical Company and Sun Oil Company), Madison County, Marion County, Medina County, Meigs County, Mercer County, Miami County, Monroe County, Morgan County, Montgomery County (except Bergstrom Paper and Miami Paper), and Bergstrom Paper), Morrow County, Muskingum County, Noble County, Ottawa County, Paulding County, Perry County, Pickaway County, Pike County (except Portsmouth Gaseous Diffusion Plant), Portage County, Preble County, Putnam County, Richland County, Ross County (except Mead Corporation), Sandusky County (except Martin Marietta Chemicals), Scioto County, Seneca County, Shelby County, Trumbull County, Tuscarawas County, Union County, Van Wert County, Vinton County, Warren County, Washington County (except Shell Chemical), Wayne County, Williams County, Wood County (except Libbey-Owens-Ford Plants Nos. 4 and 8 and No. 6), and Wyandot County.

(5) Disapproval—USEPA disapproves the Ohio Rule 3745–18–03(A), Attainment Dates and also disapproves Ohio Rule 3745–18–03(C)(3) Compliance Time Schedules for all sources electing to comply with the regulations by utilizing complying fuels.

(6) No Action—USEPA is neither approving nor disapproving the following Ohio Rule pending further review: 3745–18–04(D)(2), 3745–18–04(D)(3), 3745–18–04(E)(2), 3745–18–04(E)(3) and, 3745–18–04(E)(4) Emission Measurement Methods.

(7) Disapproval—USEPA disapproves Ohio Rule 3745–18–83, Emission Limitations for Summit County.

(8) No Action—USEPA is neither approving nor disapproving the emission limitations for the following counties on sources pending further review:

Adams County (Dayton Power & Light—Stuart), Allen County (Cairo Chemical), Butler County, Clermont County (Cincinnati Gas & Electric—Beckjord), Coshocton County (Columbus & Southern Ohio Electric—Conesville), Cuyahoga County, Franklin County, Gallia County (Ohio Valley Electric Company—Kyger Creek, and Ohio Power—Gavin), Lake County (Ohio Rubber, Cleveland Electric Illuminating Company—Eastlake, and Painesville Municipal—Boiler #5), Lawrence County (Allied Chemical—South Point), Lorain County (Ohio Edison—Edgewater Plant, Cleveland Electric Illuminating Avon Lake, U.S. Steel—Lorain, and B.F. Goodrich) Lucas County (Gulf Oil Company, Coulton Chemical Company, Phillips Chemical Company and Sun Oil Company), Mahoning County, Montgomery County (Bergstrom Paper and Miami Paper), Pike County (Portsmouth Gaseous Diffusion Plant), Stark County, Washington County (Shell Chemical Company), and Wood County (Libbey-Owens-Ford Plants Nos. 4 and 8 and No. 6).

(9) No Action—USEPA takes no action on the 30-day averaging provisions contained in the Toledo Edison Company's Bay Shore Station State Implementation Plan revision until a general review of 30-day averaging is complete.

(10) Approval—USEPA approves Condition #3 of the permits for the Coulton Chemical Plant in Toledo and the E.I. duPont de Nemours and Company plant in Miami, Ohio. This condition requires the installation and operation of continuous emission monitors for sulfur dioxide.

(11) *Approval.* USEPA approves Ohio's Good Engineering Stack Height Regulations as contained in Ohio Administrative Code Chapter 3745–16–01 and 02. These rules were adopted by the State on February 12, 1986 and were effective on March 5, 1986.

(12) In a letter dated June 25, 1992, Ohio submitted a maintenance plan for sulfur dioxide in Morgan and Washington Counties.

(b) Regulations for the control of sulfur dioxide in the State of Ohio.

(1) *Definitions.* All terms used in this paragraph but not specifically defined below shall have the meaning given them in the Clean Air Act or parts 51, 52, or 60 of this chapter.

(i) *By-product coke oven gas* means the gas produced during the production of metallurgical coke in slot-type, by-product coke batteries.

(ii) *Flue gas desulfurization* means any pollution control process which treats stationary source combustion flue gas to remove sulfur oxides.

(iii) *Fossil fuel* means natural gas, refinery fuel gas, coke oven gas, petroleum, coal and any form of solid, liquid, or gaseous fuel derived from such materials.

(iv) *Fossil fuel-fired steam generating unit* means a furnace or boiler used in the process of burning fossil fuel for the purpose of producing steam by heat transfer.

(v) *Heat input* means the total gross calorific value (where gross calorific value is measured by ASTM Method D2015–66, D240–64, or D1826–64) of all fossil and non-fossil fuels burned. Where two or more fossil fuel-fired steam generating units are vented to the same stack the heat input shall be the aggregate of all units vented to the stack.

(vi) *Owner or operator* means any person who owns, leases, operates, controls, or supervises a facility, building, structure, or installation which directly or indirectly results or may result in emissions of any air pollutant for which a national standard is in effect.

(vii) *Primary zinc smelter* means any installation engaged in the production, or any intermediate process in the production, of zinc or zinc oxide from the zinc sulfide ore concentrates through the use of pyrometallurgical techniques.

(viii) *Process* means any source operation including any equipment, devices, or contrivances and all appurtenances thereto, for changing any material whatever or for storage or handling of any materials, the use of which may cause the discharge oons within a structure, building, or shop shall be considered as a single process for purposes of this regulation.

(ix) *Process weight* means the total weight of all materials and solid fuels introduced into any specific process. Liquid and gaseous fuels and combustion air will not be considered as part of the process weight unless they become part of the product. For a cyclical or batch operation, the process weight per hour will be derived by dividing the total process weight by the number of hours from the beginning of any given process to the completion thereof, excluding any time during which the equipment is idle. For a continuous operation, the process weight per hour will be derived by dividing the process weight for the number of hours in a given period of time by the number of hours in that period. For fluid catalytic cracking units, process weight shall mean the total weight of material introduced as fresh feed to the cracking unit. For sulfuric acid production units, the nitrogen in the air feed shall not be included in the calculation of process weight.

(x) *Run* means the net period of time during which an emission sample is collected. Unless otherwise specified, a run may be either intermittent or continuous within the limits of good engineering practice as determined by the Administrator.

(xi) *Source operation* means the last operation preceding the emission of an air contaminant, which operation (*a*) results in the separation of the air contaminant from process materials or in the conversion of the process materials into air contaminants, as in the case of combustion of fuel; and (*b*) is not primarily an air pollution abatement operation.

(xii) *Stack* means any chimney, flue, vent, roof monitor, conduit or duct arranged to vent emissions to the ambient air.

(xiii) *Sulfur recovery plant* means any plant that recovers elemental sulfur from any gas stream.

(xiv) *Sulfuric acid production unit* means any facility producing sulfuric acid by the contact process by burning

elemental sulfur, alkylation acid, hydrogen sulfide, organic sulfides and mercaptans, or acid sludge.

(xv) *Total rated capacity* means the sum of the rated capacities of all fuel-burning equipment connected to a common stack. The rated capacity shall be the maximum guaranteed by the equipment manufacturer or the maximum normally achieved during use as determined by the Administrator, whichever is greater.

(2) *Test methods and procedures.* Unless specified below, the test methods and procedures used for determining compliance with the applicable paragraphs of § 52.1881(b) shall be those prescribed in part 60 of this chapter. Compliance tests shall be conducted under such conditions as the Administrator shall specify based on representative performance of the affected facility. Notification and recordkeeping procedures shall be those prescribed in § 60.7 of this chapter. The owner or operator shall make available to the Administrator such records as may be necessary to determine the conditions of the performance tests. A compliance test shall consist of at least three runs.

(i) The test methods and procedures used for determining compliance for any sulfur recovery plant subject to applicable paragraph, of § 52.1881(b) shall be those prescribed in § 60.46 of this chapter with the exception that the maximum amount of sulfur dioxide sampled by Method 6 shall not exceed 50 percent of the stoichiometric amount of hydrogen peroxide absorbent.

(ii) The test methods and procedures used for determining compliance for any sulfuric acid production unit, or any primary zinc smelter subject to the applicable paragraphs of § 52.1881(b) shall be those prescribed in § 60.85 of this chapter.

(iii) The test methods and procedure used to determine the compliance of any stack venting any fossil fuel-fired steam generating units subject to the applicable paragraphs of § 52.1881(b) shall be those prescribed in § 60.46 of this chapter.

(3) *Severability.* If any provision of these regulations or the application thereof to any person or circumstances is held to be invalid, such invalidity shall not affect other provisions or application of any other part of these regulations which can be given effect without the invalid provisions or application, and to this end the provisions of these regulations and the various applications thereof are declared to be severable.

(4) *Submission of information.* The submission of any information required under § 52.1882 shall be made to the Director, Enforcement Division, U.S. Environmental Protection Agency, Region V, 230 South Dearborn, Chicago, Illinois, 60604, Attention Air Compliance Section.

(5) For purposes of this regulation, stack and boiler identification numbers used in this paragraph were derived from correspondence submitted to the U.S. EPA by the affected owners or operators, and may be found in the record supporting this rulemaking.

(6) This paragraph contains no applicable provisions in the following counties of Ohio: Ashland, Brown, Carroll, Champaign, Clinton, Darke, Defiance, Fayette, Fulton, Geauga, Guernsey, Hardin, Harrison, Highland, Hocking, Holmes, Jackson, Knox, Logan, Madison, Monroe, Morrow, Noble, Perry, Portage, Preble, Putnam, Shelby, Union, Van Wert, Warren, Williams, and Wyandot, nor does it apply to facilities equal to or less than 10 million BTU per hour total aggregate rated capacity of all units at a facility.

(7)–(10) [Reserved]

(11) In Adams County: (i) The Dayton Power and Light Company or any subsequent owner or operator of the Stuart Power Plant in Adams County, Ohio shall not cause or permit the emission of sulfur dioxide from any stack at the Stuart Plant in excess of 3.16 pounds of sulfur dioxide per million BTU actual heat input.

(ii) In lieu of meeting paragraph (b)(11)(i) of this section, the Dayton Power and Light Company may elect, in accordance with the compliance schedule provisions of § 52.1882, to comply with the emission limitations which will satisfy the following equation:

$$\text{(A)}\ 0.0791\ (EL_1+EL_2+EL_3+EL_4)\ 3\leq 1$$

where EL_1 is the emission limitation (pounds per million BTU) per stack i and i is the stack number. For purposes

of this regulation, each stack is identified as follows:

Stack No.	Boiler identification
1	1
2	2
3	3
4	4

(12) In Butler County: (i) No present or subsequent owner or operator unless otherwise specified in this subparagraph, of any fossil fuel-fired steam generating unit(s) located in Butler County, Ohio shall cause or permit sulfur dioxide emissions from any stack in excess of 1.40 pounds of sulfur dioxide per million BTU actual heat input. The fossil fuel-fired steam generating units at General Motors Corporation's Butler County plant, Armco's Hamilton plant, and Armco's Middetown plant are all exempted from this emission limitation in this subparagraph.

(ii) USEPA has rescinded the sulfur and sulfur dioxide emission limits for owners or operators of by-product coke ovens located in Butler County.

(iii) USEPA has rescinded the sulfur and sulfur dioxide emission limits for Armco Steel Company's Hamilton Plant located in Butler County.

(iv) USEPA has rescinded the sulfur dioxide emission limits for Armco Steel Company's Middletown Plant located in Butler County.

(v) The Champion Paper Company or any subsequent owner or operator of the Champion Paper facilities located in Butler County, Ohio shall not cause or permit emissions of sulfur dioxide from fossil fuel-fired steam-generating units numbered B010 and B020 in excess of 3.43 pounds of sulfur dioxide per million BTU actual heat input.

(13) In Clermont County: (i) The Cincinnati Gas & Electric Company or any subsequent owner or operator of the Beckjord Power Plant in Clermont County, Ohio, shall not cause or permit the emission of sulfur dioxide from any stack at the Beckjord plant in excess of 2.02 pounds of sulfur dioxide per million BTU actual heat input.

(ii) In lieu of paragraph (b)(19)(i) of this section, the Cincinnati Gas and Electric Company may elect, in accordance with the compliance schedule provisions of § 52.1882, to comply with the emission limitations which will satisfy all of the following equations:

(A) $0.1426\ EL_1+0.1629\ EL_2+0.0667\ EL_3+0.0823\ EL_4+0.0122\ EL_5 \leq 1$
(B) $0.1252\ EL_1+0.1349\ EL_2+0.1003\ EL_3+0.1192\ EL_4+0.0155\ EL_5 \leq 1$
(C) $0.0337\ EL_1+0.0353\ EL_2+0.0382\ EL_3+0.0451\ EL_4+0.0709\ EL_5 \leq 1$
(D) $0.1334\ EL_1+0.1492\ EL_2+0.0740\ EL_3+0.0904\ EL_4+0.0247\ EL_5 \leq 1$
(E) $0.0249\ EL_1+0.0257\ EL_2+0.0283\ EL_3+0.0332\ EL_4+0.0841\ EL_5 \leq 1$

where EL_1 is the emission limitation (pounds per million BTU) per stack i and i is the stack number. For purposes of this regulation each stack is identified as follows:

Stack No.	Boiler identification
1	1
2	2
3	3
4	4
5	5, 6

(14) In Coshocton County: (i) The Columbus and Southern Ohio Power Company or any subsequent owner or operator of the Conesville Plant in Coshocton County, Ohio shall not cause or permit the emission of sulfur dioxide from any of the stacks 1, 2, and 3 at the Conesville Plant in excess of 5.66 pounds of sulfur dioxide per million BTU actual heat input. Stack 4 at the Conesville Plant is subject to New Source Performance Standards and is limited to 1.2 pounds of sulfur dioxide per million BTU actual heat input.

(ii) In lieu of meeting paragraph (b)(21)(i) of this section, the Columbus and Southern Ohio Power Company may elect for stacks 1, 2, and 3 only, in accordance with the compliance schedule provision of § 52.182, to comply with the emission limitations which will satisfy all of the following equations:

(A) $0.0677\ (EL_1+0.0411\ EL_2)+0.0065\ EL3 \leq 1$
(B) $0.0707\ (EL_1+0.0730\ EL_2)+0.0011\ EL3 \leq 1$
(C) $0.0623\ (EL_1+0.0767\ EL_2)+0.0013\ EL3 \leq 1$
(D) $0.0565\ (EL_1+0.0337\ EL_2)+0.0866\ EL3 \leq 1$
(E) $0.0401\ (EL_1+0.0683\ EL_2)+0.0026\ EL3 \leq 1$
(F) $0.0410\ (EL_1+0.1021\ EL_2)+0.0\ EL3 \leq 1$

where EL_1 is the emission limitation (pounds per million BTU) per stack i, and i is the stack number. For purposes of this regulation each stack is identified as follows:

Stack No.	Boiler identification
1	1, 2
2	3
3	4
4	5, 6

(15) In Cuyahoga County, no owner or operator, unless otherwise specified in this subparagraph, shall cause or permit emission of sulfur dioxide from any stack in excess of the rates specified in paragraphs (b)(23) (i) and (ii) of this section.

(i) For fossil fuel-fired steam generating units between 10.0 MMBTU's per hour and 350 MMBTU's per hour total rated capacity of heat input, the emission rate in pounds of sulfur dioxide per million BTU of actual heat input shall be calculated by the following equation:

$$EL = 7.014\ Q_m^{-0.3014}$$

where Q_m is the total rated capacity of heat input in million BTU per hour and EL is the allowable emission rate in pounds of sulfur dioxide per million BTU actual heat input.

(ii) For fossil fuel-fired units equal to or greater than 350 MMBTU per hour total rated capacity, the emission shall not exceed a rate of 1.20 pounds of sulfur dioxide per MMBTU of actual heat input.

(iii) The ''E.I. DuPont de Nemours and Company'' or any subsequent owner or operator of the ''E.I. DuPont de Nemours and Company'' facility located at 2981 Independence Road, Cleveland, Ohio, shall not cause or permit the following source to violate the limitation indicated:

(A) Sulfur burning contact process a maximum of 0.00 pounds of sulfur dioxide per ton of one hundred percent acid produced.

(B) (Reserved)

(iv) Master Metals Incorporated or any subsequent owner or operator of the ''Master Metals Incorporated'' facility located at 2850 West Third, Cleveland, Ohio, shall not cause or permit the emission of sulfur dioxide from the following sources to exceed the amounts indicated:

(A) Blast furnace process; a maximum of 0.00 pounds of sulfur dioxide per ton of metal charged.

(B) Reverb furnace process; a maximum of 10.00 pounds of sulfur dioxide per ton of metal charged.

(v) Centerior Energy Corporation, or any subsequent owner or operator of the ''Centerior Energy Corporation, Steam Heating Plant'' facility located at 2274 Canal Road, Cleveland, Ohio, shall not cause or permit the emission of sulfur dioxide from Boiler Numbers 34 through 38 to exceed a maximum of 1.38 pounds of sulfur dioxide per MMBTU actual heat input from each boiler.

(vi) Centerior Energy Corporation, or any subsequent owner or operator of the ''Centerior Energy Corporation, Steam Heating Plant'' facility located at 1901 Hamilton Avenue, Cleveland, Ohio, shall not cause or permit the emission of sulfur dioxide from Boiler Number 1 through 6 to exceed a maximum of 1.00 pounds of sulfur dioxide per MMBTU actual heat input from each boiler.

(vii) Forest City Foundries, or any subsequent owner or operator of the ''Forest City Foundries'' facility located at 9401 Maywood Avenue, Cleveland, Ohio, shall not cause or permit the emission of sulfur dioxide from the following sources to exceed the amounts indicated:

(A) Number 1 Cupola-North; a maximum of 0.00 pounds of sulfur dioxide per ton of metal charged.

(B) Number 2 Cupola-South a maximum of 0.00 pounds of sulfur dioxide per ton of metal charged.

(viii) Forest City Foundries, or any subsequent owner or operator of the ''Forest City Foundries'' facility located at 2500 West 27th Street, Cleveland, Ohio, shall not cause or permit the emission of sulfur dioxide from the following sources to exceed the amounts indicated:

(A) Number 1 Cupola; a maximum of 0.00 pounds of sulfur dioxide per ton of metal charged.

(B) Number 2 Cupola; a maximum of 0.00 pounds of sulfur dioxide per ton of metal charged.

(ix) Harshaw Chemical Company, or any subsequent owner or operator of the ''Harshaw Chemical Company'' facility located at 1000 Harvard Avenue, Cleveland, Ohio, shall not cause or permit the emission of sulfur dioxide from

the following sources to exceed the amounts indicated:

(A) Process Buss System; a maximum of 19.00 pounds of sulfur dioxide per ton of acid produced.

(B) (Reserved)

(x) Metal Blast, Incorporated, or any subsequent owner or operator of ''Metal Blast, Incorporated'' facility located at 871 East 67th Street, Cleveland, Ohio, shall not cause or permit the emission of sulfur dioxide from the Whiting Model Number 7 Cupola to exceed a maximum of 0.00 pounds of sulfur dioxide per ton of metal charged.

(xi) LTV Steel Company, Inc., or any subsequent owner or operator of the ''LTV Steel Company, Inc.'' facility located at 3100 East 45th Street, Cleveland, Ohio, shall not cause or permit the emission of sulfur dioxide from the following sources to exceed the limitations indicated below and/or shall be restricted to specified fuel usages as indicated below:

(A) Boiler 234; Boiler 26, Boiler 27; Boiler 28; Boiler 29; Boiler 30; Boiler 31; Boiler 32; Boiler 33; Boiler 34; Stoves for Blast Furnaces C–1, C–2, C–3, C–4; 80'' Hot Strip Mill Furnace 1, 2, 3; 84'' Anneal Furnaces North and South; P Anneal Furnaces 1–4; and Coke Plant No. 2 Car Thaw: A maximum of 0.024 pounds of sulfur dioxide per MMBTU actual heat input from each stack, and each boiler is restricted to only burn natural gas and/or blast furnace gas.

(B) Boilers A, B and C: A maximum of 0.99 pounds of sulfur dioxide per MMBTU actual heat input from each boiler, and a maximum total emissions from the three boilers combined of 828 pounds of sulfur dioxide per hour (daily average).

(C) Boiler D: A maximum of 2.45 pounds of sulfur dioxide per MMBTU actual heat input and 1056 pounds of sulfur dioxide per hour (daily average).

(D) Boilers A–D: A maximum total emissions from the four boilers combined of 1258 pounds of sulfur dioxide per hour (daily average).

(E) Boiler 1 and 2: A maximum of 1.64 pounds of sulfur dioxide per MMBTU of actual heat input, and a maximum total emissions from the two boilers combined of 315 pounds of sulfur dioxide per hour (daily average).

(F) Boiler 3: A maximum of 2.39 pounds of sulfur dioxide per MMBTU of actual heat and 686 pounds of sulfur dioxide per hour (daily average).

(G) Boilers A–D, 1–3: A maximum total emissions from the seven boilers combined of 1958 pounds of sulfur dioxide per hour (daily average).

(H) 84″ Hot Strip Mill Furnaces 1, 2, and 3: A maximum of 1.26 pounds of sulfur dioxide per MMBTU of actual heat input from each furnace, and a maximum total emissions from the three furnaces combined of 1365 pounds of sulfur dioxide per hour (daily average).

(I) Stoves of Blast Furnaces C–5 and C–6: A maximum of 0.15 pounds of sulfur dioxide per MMBTU of actual heat input.

(J) Coke Batteries 1, 2, 3 and 4 Underfiring: 44″ Soaking Pits 2–6; 45″ Soaking Pits 11–15; No. 2 BOF; Foundry; and Coke Plant No. 1 Car Thaw: A maximum of 0.10 pounds of sulfur dioxide per MMBTU actual heat input (20 grains or less of hydrogen sulfide per 100 cubic feet of coke oven gas at standard conditions) from each stack.

(K) Coke Batteries 6 and 7 Underfiring: A maximum of 1.98 pounds of sulfur dioxide per MMBTU of actual heat input (390 grains of hydrogen sulfide per 100 cubic feet of coke oven gas at standard conditions) from each stack.

(L) No. 2 Coke Plant: Coke oven gas produced by the Coke Batteries Numbers 6 and 7 shall have a maximum of 390 grains of hydrogen sulfide per hundred dry standard cubic feet, and the total production of hydrogen sulfide in coke oven gas from the two batteries combined shall be a maximum of 470 pounds of hydrogen sulfide per hour (daily average).

(M) Fuel Oil Quality: Fuel oil combusted at the facility shall have a maximum of 0.525 pounds of sulfur per MMBTU heat content.

(N) Claus Desulfurization Plant: A maximum of 78 pounds of sulfur dioxide per hour.

(O) 10″ Bar Mill; 12″ Bar Mill; Open Hearth Plant; 96″ Slab Mill, Units 1–5; Sinter Plant: A maximum of 0.00 pounds of sulfur dioxide per MMBTU actual heat input.

(P) LTV Steel Company, Inc., shall collect and record the following information:

(*1*) Amounts of individual coke oven gas from the No. 1 Coke Plant, coke oven gas from the No. 2 Coke Plant, blast furnace gas, fuel oil, coal, and natural gas used for each day at each facility listed in paragraphs (b)(23)(xiv)(B) through (b)(23)(xiv)(H) of this section, and total production of coke oven gas from Number 2 Coke Plant.

(*2*) Daily average sulfur content and heating value for coal and oil used each day during each calendar quarter, as determined in accordance with 40 CFR part 60, Appendix A, Method 19, section 2, or equivalent methods approved by the Administrator.

(*3*) Daily average hydrogen sulfide content for coke oven gas used each day during each calendar quarter, as determined in accordance with 40 CFR part 60, appendix A, Method 11, or equivalent methods approved by the Administrator.

(*4*) Daily average sulfur content and heating value of blast furnace gas and natural gas shall be based upon testing performed once during each calendar quarter.

(*5*) Calculated sulfur dioxide emissions in pounds per MMBTU and pounds per hour using the information in paragraphs (b)(23)(xiv)(P)(*1*) through (b)(23)(xiv)(P)(*4*) at the facilities listed in paragraphs (b)(23)(xiv)(B) through (b)(23)(xiv)(H) of this section for each day.

(*6*) Calculated total hydrogen sulfide content of coke oven gas supplied by Number 2 Coke Plant.

(Q) Compliance with the provisions of paragraphs (b)(23)(xiv)(B) through (b)(23)(xiv)(H), (b)(23)(xiv)(L), and (b)(23)(xiv)(M) of this section shall be determined based on:

(*1*) Stack gas sampling, as specified in 40 CFR 60.46 (See § 52.1881 (b)(2)); or

(*2*) Information developed pursuant to paragraph (b)(23)(xiv)(P) of this section.

A finding of noncompliance by one of these methods cannot be refuted by a showing of compliance by the other method.

(R) Compliance with the provisions of all other paragraphs shall be determined based on stack gas sampling, as specified in 40 CFR 60.46 (See § 52.1881(b)(2)).

(S) LTV Steel Company, Inc. shall submit a written report to the U.S. Environmental Protection Agency, Region 5, within 30 days after the end of each calendar quarter which contains a description of each day during which the recorded sulfur dioxide, hydrogen sulfide, or fuel exceeded the pounds of sulfur dioxide per MMBTU, pounds of sulfur dioxide per hour, grains of hydrogen sulfide per 100 cubic feet, or total hydrogen sulfide production limits listed in paragraphs (b)(23)(xiv)(B) through (b)(23)(xiv)(H) and (b)(23)(xiv)(L) of this section. For each instance in which the applicable limit was exceeded, the report shall provide:

(*1*) The date of each excursion;

(*2*) The magnitude of the excursion;

(*3*) A statement identifying the probable cause or causes of the excursion; and

(*4*) A description of any corrective actions taken to prevent or mitigate the excursion.

The report shall also address any periods of measurement (or recording) system malfunction and, if appropriate, shall state that there are no instances of any excursion during the reporting period.

(xii) Aluminum Company of America, or any subsequent owner or operator of the ''Aluminum Company of America'' facility located at 1600 Harvard Avenue, Cuyahoga Heights, Ohio, shall not cause or permit the emission of sulfur dioxide from Boiler Numbers 1 through 5 to exceed a maximum of 5.2 pounds of sulfur dioxide per MMBTU actual heat input from each boiler.

(xiii) Standard Oil Company (Ohio), or any subsequent owner or operator of the ''Standard Oil Company (Ohio), Cleveland Asphalt Plant'' facility located at 2635 Broadway Avenue, Cleveland, Ohio, shall not cause or permit the emission of sulfur dioxide from Boiler Numbers 7, 9, and 10 to exceed 0.00 pounds of sulfur dioxide per MMBTU actual heat input from each boiler.

(xiv) Medical Center Company, or any subsequent owner or operator of the ''Medical Center Company'' facility located at 2250 Circle Drive, Cleveland,

Ohio, shall not cause or permit the following sources to violate the limitations indicated:

(A) Boiler Numbers 1 and 2 shall only burn natural gas.

(B) Boiler Numbers 3, 4, 7 and 8 are limited to a maximum of 4.6 pounds of sulfur dioxide per MMBTU actual heat input from each boiler.

(xv) Hupp, Incorporated, or any subsequent owner or operator of the ''Hupp, Incorporated'' facility located at 1135 Ivanhoe Road, Cleveland, Ohio, shall not cause or permit the emission of sulfur dioxide from Boiler Numbers 1 through 3 to exceed a maximum of 3.50 pounds of sulfur dioxide per MMBTU actual heat input from each boiler.

(xvi) The Cleveland Water Department, or any subsequent owner or operator of the ''Cleveland Water Department, Division Pumping Station'' facility located at 1245 West 45th Street, Cleveland, Ohio, shall not cause or permit the emission of sulfur dioxide from Boiler Numbers 1 through 6 to exceed 4.20 pounds of sulfur dioxide per MMBTU actual heat input from each boiler.

(xvii) Ford Motor Company, or any subsequent owner or operator of the ''Ford Motor Company, Cleveland Engine Plant Number 2'' facility located at 18300 Five Points Road, Brookpark, Ohio, shall not cause or permit the emission of sulfur dioxide from Boilers Numbers 1 through 5 to exceed a maximum of 4.2 pounds of sulfur dioxide per MMBTU actual heat input from each boiler.

(xviii) Ford Motor Company, or any subsequent owner or operator of the ''Ford Motor Company, Cleveland Casting Plant'' facility located at 5600 Engle Road, Brookpark, Ohio, shall not cause or permit the emission of sulfur dioxide from each of Numbers 1 through 7 Cupola to exceed a maximum of 6.00 pounds of sulfur dioxide per ton of actual process weight input.

(xix) Chase Bag Company, or any subsequent owner or operator of the ''Chase Bag Company'' located at 218 Cleveland Street, Chagrin Falls, Ohio, shall not cause or permit the emission of sulfur dioxide from Boiler Numbers 1 and 2 to exceed a maximum of 4.20 pounds of sulfur dioxide per MMBTU actual heat input from each boiler.

(xx) General Electric Company or any subsequent owner or operator of the ''General Electric Power Plant'' facility located at Nela Park, East Cleveland, Ohio, shall not cause or permit the emission of sulfur dioxide from Boiler Numbers 1 and 4 to exceed a maximum of 1.60 pounds of sulfur dioxide per MMBTU actual heat input from each boiler.

(xxi) General Electric Company, or any subsequent owner or operator of the ''General Electric Company'' facility located at 21800 Tungsten Road, Euclid, Ohio, shall not cause or permit the emission of sulfur dioxide from the following sources to exceed the amounts indicated:

(A) Boiler Number 1; a maximum of 1.00 pounds of sulfur dioxide per MMBTU actual heat input from each boiler.

(B) Boiler Number 4; a maximum of 1.60 pounds of sulfur dioxide per MMBTU actual heat input from each boiler.

(xxii) Addressograph Multigraph or any subsequent owner or operator of the ''Addressograph Multigraph'' facility located at 1200 Babbitt Road, Euclid, Ohio, shall not cause or permit the emission of sulfur dioxide from Boiler Numbers 1 through 3 to exceed a maximum of 0.00 pounds of sulfur dioxide per MMBTU actual heat input from each boiler.

(xxiii) Allied Chemical Corporation, or any subsequent owner or operator of the ''Allied Chemical Corporation'' facility located at 5000 Warner Road, Garfield Heights, Ohio, shall not cause or permit the emission of sulfur dioxide from the following sources to exceed the amounts indicated.

(A) Number 5 Unit Sulfuric Acid; a maximum of 4.80 pounds of sulfur dioxide per ton of one hundred percent acid produced.

(B) Number 6 Unit Sulfuric Acid; a maximum of 4.80 pounds of sulfur dioxide per ton of one hundred percent acid produced.

(xxiv) Lear Siegler, Incorporated, or any subsequent owner or operator of the ''Lear Siegler, Incorporated'' facility located at 17600 Broadway, Maple Heights, Ohio, shall not cause or permit the emission of sulfur dioxide from Boiler Number 1 to exceed a maximum

of 0.00 pounds of sulfur dioxide per MMBTU actual heat input.

(xxv) Chevrolet Motor Division, or any subsequent owner or operator of the ''Chevrolet Motor Division'' facility located at Stumph Road and Brookpark, Parma, Ohio, shall not cause or permit the emission of sulfur dioxide from the following sources to exceed the amounts indicated:

(A) Boiler Numbers 1 and 2; a maximum of 1.53 pounds of sulfur dioxide per MMBTU actual heat input from each boiler.

(B) Boiler Numbers 3 and 4; a maximum of 1.8 pounds of sulfur dioxide per MMBTU actual heat input from each boiler.

(xxvi) Ford Motor Company, or any subsequent owner or operator of the ''Ford Motor Company, Cleveland Stamping Plant'' facility located at 7845 Northfield Road, Walton Hills, Ohio, shall not cause or permit the emission of sulfur dioxide from Boilers Numbers 1 through 3 to exceed a maximum of 1.2 MMBTU actual heat input from each boiler.

(xxvii) Highland View Cuyahgoa County Hospital, or any subsequent owner or operator of the ''Highland View Cuyahoga County Hospital'' facility located at 3901 Ireland Drive, Warrensville Township, Ohio, shall not cause or permit the emission of sources to exceed the amounts indicated:

(A) Boiler Numbers 1 and 2; a maximum of 1.50 pounds of sulfur dioxide per MMBTU actual heat input from each boiler.

(B) Boiler Numbers 3 and 4; a maximum of 2.90 pounds of sulfur dioxide per MMBTU actual heat input from each boiler.

(xxviii) Centerior Energy Corporation, or any subsequent owner or operator of the ''Centerior Energy Corporation, Lake Shore Plant'' facility located at 6800 South Marginal Drive, Cleveland, Ohio, shall not cause or permit the emission of sulfur dioxide from the following sources to exceed the amounts indicated:

(A) Boiler Numbers 91 through 94; a maximum of 1.90 pounds of sulfur dioxide per MMBTU actual heat input from each boiler.

(B) Boiler Number 18; a maximum of 1.30 pounds of sulfur dioxide per MMBTU actual heat input.

(xxix) United States Steel Corporation, or any subsequent owner or operator of the ''United States Steel Corporation, Cuyhoga Works'' facility located at 4300 East 49th Street, Cuyhoga Heights, Ohio, shall not cause or permit the emission of sulfur dioxide from the following sources to exceed the amounts indicated:

(A) Boiler Numbers 1 and 2; a maximum of 0.5 pounds of sulfur dioxide per MMBTU actual heat input from each boiler.

(B) Boiler Numbers 3 through 7; a maximum of 1.30 pounds of sulfur dioxide per MMBTU actual heat input from each boiler.

(xxx) United States Steel Corporation, or any subsequent owner or operator of the ''United States Steel Corporation, Lorain-Cuyahoga Works'' facility located at 2650 Broadway Avenue, Cleveland, Ohio, shall not cause or permit the emission of sulfur dioxide from the following sources to exceed the amounts indicated:

(A) Boiler Numbers 1 through 6; a maximum of 0.00 pounds of sulfur dioxide per MMBTU actual heat input from each boiler.

(B) Blast Furnace Numbers D–6 and A; a maximum of 0.00 pounds of sulfur dioxide per ton of iron produced.

(xxxi) Reilly Industries, Inc., or any subsequent owner or operator of the ''Reilly Industries, Inc.'' facility located at 3201 Independence Road, Cleveland, Ohio shall not cause or permit the emission of sulfur dioxide from the following sources to exceed the amounts indicated:

(A) Still Numbers 3 through 7; a maximum of 2.7 pounds of sulfur dioxide per ton of coal tar processed.

(B) [Reserved]

(xxxii) No owner or operator of any process equipment, unless otherwise specified in this paragraph, shall cause or permit the emission of sulfur dioxide from any stack in excess of 6.00 pounds of sulfur dioxide per ton of actual process weight input.

(16) In Franklin County, no owner or operator of the following types of facilities unless otherwise specified in this paragraph, shall cause or permit

emission of sulfur dioxide from any stack in excess of the rates specified below:

(i) For fossil fuel-fired steam generating unit between 10.0 and 50.0×10^6 BTU per hour total rated capacity of heat input, the emission rate in pounds of sulfur dioxide per million BTU actual heat input shall be calculated by the following equation:

$$EL = 8.088 Q_m^{-0.4307}$$

where Q_m is the total rated capacity of heat input in million BTU per hour and EL is the allowable emission rate in pounds of sulfur dioxide per million BTU actual heat input.

(ii) For fossil fuel-fired steam generating unit(s) equal to or greater than 50.0×10^6 BTU per hour total rated capacity of heat input, the emission limitation shall be 1.50 pounds of sulfur dioxide per million BTU actual heat input.

(iii) The present or any subsequent owner or operator of the Columbus State Institution in Franklin County, Ohio shall not cause or permit the emission of sulfur dioxide from any stack at this facility in excess of 3.80 pounds of sulfur dioxide per million BTU actual heat input.

(iv) The present or any subsequent owner or operator of the Columbus State Hospital in Franklin County, Ohio shall not cause or permit the emission of sulfur dioxide from any stack at this facility in excess of 4.10 pounds of sulfur dioxide per million BTU actual heat input.

(v) The present or any subsequent owner or operator of Ross Laboratory in Franklin County, Ohio shall not cause or permit the emission of sulfur dioxide from any stack at this facility in excess of 4.80 pounds of sulfur dioxide per million BTU actual heat input.

(vi) The present or any subsequent owner or operator of the Rickenbacker Air Force Base in Franklin County, Ohio shall not cause or permit the emission of sulfur dioxide from any stack at this facility in excess of 2.20 pounds of sulfur dioxide per million BTU actual heat input.

(vii) The present or any subsequent owner or operator of the Capital City Products facility in Franklin County, Ohio, shall not cause or permit the emission of sulfur dioxide from any stack at this facility in excess of 3.10 pounds of sulfur dioxide per million BTU actual heat input.

(viii) The present or any subsequent owner or operator of the Westinghouse Electric facility in Franklin County, Ohio shall not cause or permit the emission of sulfur dioxide from any stack at this facility in excess of 2.20 pounds of sulfur dioxide per million BTU actual heat input.

(ix) (A) The present or any subsequent owner or operator of the Naval Weapons Industrial Reserve Plant in Franklin County, Ohio shall not cause or permit the emission of sulfur dioxide from any stack at this facility in excess of 1.06 pounds of sulfur dioxide per million BTU actual heat input.

(B) In lieu of meeting § 52.1881(b)(27)(ix)(A), the present or any subsequent owner or operator of the Naval Weapons Industrial Reserve Plant may elect to comply with the alternate emission limitation and operating conditions specified below.

(*1*) The present or any subsequent owner or operator of the Naval Weapons Industrial Reserve Plant shall not cause or permit the emission of sulfur dioxide from any stack in excess of 3.65 pounds of sulfur dioxide per million BTU actual heat input provided that such stacks be greater than or equal to 44.5 meters in height and that the combined maximum boiler design capacity be limited to 177 million BTU per hour by installation of a lock-out system on the boiler coal-feeders. The present or any subsequent owner or operator of the Naval Weapons Industrial Reserve Plant shall keep a permanent log on the lock-out system and record any problems with the system in the log. This log shall be available for inspection by the EPA. This log shall be in lieu of the reporting and monitoring requirements of § 52.1882(g).

(*2*) The present or any subsequent owner or operator of the Naval Weapons Industrial Reserve Plant shall be permitted to operate its five boilers (#1, 2, 3, 5a or 5b) in only one of the following three configurations at any given time:

(*i*) Any two of boilers 1, 2, or 3 on; the remaining three boilers off.

(*ii*) Boilers 5a and 5b on; boilers 1, 2, and 3 off.

(*iii*) Boiler 5b and any one of boilers 1, 2, or 3 on; the remaining three boilers off.

(*3*) In the event that the Naval Weapons Industrial Reserve Plant elects to comply with the alternate emission limitation and operating configurations in § 52.1881(b)(27)(ix)(B) (*1*) and (*2*) and vents its boilers through stacks great on the boiler coal-feeders such that the combined maximum boiler design capacity is limited to 177 MMBTU/hr, all such action shall be taken within 30 weeks of (the effective date of promulgation). The Administrator must be notified in writing that all such action was taken within five working days of its completion.

(x) No owner or operator of any primary zinc smelter shall cause or permit the emission of sulfur dioxide from the plant in excess of the amount prescribed by the following equation:

$$Y=0.564X^{0.85}$$

where X is the total sulfur feed expressed as elemental sulfur in the smelter input stream in lbs/hour and Y is the allowable sulfur dioxide emission rate in lbs/hour from all stacks combined.

(xi) Except as provided in paragraph (b)(27)(x) of this section, no owner or operator of any process equipment shall cause or permit the emission from any stack into the atmosphere of any process gas stream containing sulfur dioxide in excess of 2.40 pounds of sulfur dioxide per ton of actual process weight input.

(17) In Gallia County: (i) The Ohio Power Company or any subsequent owner or operator of the Gavin Power Plant in Gallia County, Ohio shall not cause or permit the emission of sulfur dioxide from any stack at the Gavin facility in excess of 7.41 pounds per million Btu actual heat input.

(ii) The Ohio Valley Electric Company or any subsequent owner or operator of the Kyger Creek Power Plant in Gallia County, Ohio shall not cause or permit the emission of sulfur dioxide from any stack at the Kyger Creek facility in excess of 8.20 pounds of sulfur dioxide per million BTU actual heat input.

(18) In Lake County, no owner or operator of the following types of facilities, unless otherwise specified in this subparagraph, shall cause or permit emissions from stack in excess of the rates specified below:

(i) For fossil fuel-fired steam generating units between 10.0 and $1000+10^6$ BTU per hour total rated capacity of heat input, the emission rate in pounds of sulfur dioxide per million BTU actual heat input shall be calculated by the following equation:

$$EL=14.976Q_m^{-0.3431}$$

where Q_m is the total rated capacity of heat input in million BTU per hour and EL is the allowable emission rate in pounds of sulfur dioxide per million BTU actual heat input.

(ii) For fossil fuel-fired steam generating unit(s) equal to or greater than $1000+10^6$ BTU per hour total rated capacity of heat input, 1.40 pounds of sulfur dioxide per million BTU actual heat input.

(iii) The present or any subsequent owner or operator of the Ohio Rubber Company facility in Lake County, Ohio, shall not cause or permit the emission of sulfur dioxide from any stack at the facility in excess of 6.00 pounds of sulfur dioxide per million BTU actual heat input.

(iv) The present or any subsequent owner or operator of the Painesville Municipal Power Plant in Lake County, Ohio, shall not cause or permit the emission of sulfur dioxide from any stack at this facility in excess of the rates specified below:

(A) For boilers 1 through 4: 5.20 pounds of sulfur dioxide per million BTU actual heat input.

(B) Boiler number 5 is subject to New Source Performance Standards and is limited to 1.20 pounds of sulfur dioxide per million BTU actual heat input.

(v) The present or any subsequent owner or operator of the Erie Coke and Chemical Company facility in Lake County, Ohio shall not cause or permit the combustion of by-product coke oven gas for coke oven underfiring containing a total sulfur content expressed as hydrogen sulfide in excess of 450 grains of hyrogen sulfide per 100 dry standard cubic feet of coke oven gas. All existing boilers previously owned by Diamond Shamrock will remain at 0.0 pounds of sulfur dioxide per million BTU actual heat input.

(vi) The Cleveland Electric Illuminating Company, or any subsequent owner or operator of the Eastlake Plant in Lake County, Ohio, shall not cause or permit the emission of sulfur dioxide from any stack at the Eastlake Plant in excess of 5.64 pounds of sulfur dioxide per million BTU actual heat input. Recordkeeping and reporting requirements and compliance test methods are those found at paragraph (b)(2) of this section.

(vii) [Reserved]

(viii)(A) The Lubrizol Corporation, or any subsequent owner or operator of the Lubrizol facilities located in Lake County, Ohio, shall not cause or permit the emission of sulfur dioxide from any stack at the Lubrizol facility in excess of 20.00 pounds of sulfur dioxide per ton of actual process weight input.

(B) The Lubrizol Corporation, or any subsequent owner or operator of the Lubrizol facilities located in Lake County, Ohio, shall not cause or permit the emission of sulfur dioxide from any stack for boilers 1, 2 or 3 at the Lubrizol facility in excess of 0.55 pound of sulfur dioxide per million BTU actual heat input.

(ix) The Republic Steel Corporation, or any subsequent owner or operator of the Republic Steel facilities located in Lake County, Ohio, shall not cause or permit the emission of sulfur dioxide from any stack at the Republic Steel facility in excess of 4.21 pounds of sulfur dioxide per ton of actual process weight input.

(19) In Lawrence County: (i) The Allied Chemical Company or any subsequent owner or operator of the Specialty Chemicals Division in Lawrence County, Ohio, shall not cause or permit the emission of sulfur dioxide from any fossil fuel-fired steam generating unit in excess of 5.52 pounds of sulfur dioxide per million BTU actual heat input.

(ii) [Reserved]

(20) In Lorain County, no owner or operator, unless otherwise specified in this paragraph, shall cause or permit sulfur dioxide emissions from any stack in excess of the rates specified below:

(i) For fossil fuel-fired steam generating units between 10.0 and 100 million BTU per hour total rated capacity of heat input, the maximum allowable emission rate from any stack shall be calculated by the following equation:

$$EL = 21.176 Q_m^{-0.5477}$$

where Q_m is the total rated capacity of heat input in million BTU per hour and EL is the allowable emission rate in pounds of sulfur dioxide per million BTU actual heat input.

(ii) For fossil fuel-fired steam generating units equal to or greater than 100 million BTU per hour total rated capacity of heat input, the maximum allowable emission rate from any stack shall be 1.70 pounds of sulfur dioxide per million BTU actual heat input.

(iii) The Cleveland Electric Illuminating Company, or any subsequent owner, or operator of the Avon Lake Plant in Lorain County, Ohio, shall not cause or permit the emission of sulfur dioxide in pounds per million BTU actual heat input from any stack at the Avon Lake Plant in excess of the rates specified below:

Stack No. Boiler identification and Emission Limit (lbs/MMBTU)

Stack 1 (Boilers 1,2)=0.32
Stack 2 (Boilers 3,4)=0.32
Stack 3 (Boilers 5,6)=0.32
Stack 4 (Boilers 7,8)=0.32
Stack 9 (Boilers 9,10)=4.65
Stack 7 (Boiler 11)=4.65
Stack 8 (Boiler 12)=4.65

Recordkeeping and reporting requirements and compliance test method are those found at paragraph (b)(2) of this section.

(iv) [Reserved]

(v) The Cleveland Electric Illuminating Co. or any subsequent owner or operator of the Edgewater Plant located in Lorain County, Ohio shall not cause or permit the emission of sulfur dioxide from any stack at the Edgewater facility in excess of 3.40 pounds of sulfur dioxide per million BTU actual heat input.

(vi) The United States Steel Corporation or any subsequent owner or operator of the United States Steel facilities in Lorain County, Ohio, shall not cause or permit the emission of sulfur dioxide from any stack at those facilities in excess of:

(A) For fossil fuel-fired steam generating units number 001 through 009: 1.20

pounds of sulfur dioxide per million BTU of actual heat input.

(B) For fossil fuel-fired steam generating units number 010 through 012: 1.98 pounds of sulfur dioxide per million BTU of actual heat input.

(C) For fossil fuel-fired steam generating unit number 013: 0.31 pound of sulfur dioxide per million BTU of actual heat input.

(D) For all other fossil fuel-fired steam generating units, paragraph (b)(38)(i) or (b)(38)(ii) of this section shall apply, as applicable.

(vii) The United States Steel Corporation or any subsequent owner or operator of the United States Steel facilities in Lorain County, Ohio, shall not cause or permit the combustion of by-product coke oven gas from any stack containing a total sulfur content expressed as hydrogen sulfide in excess of 368 grains of hydrogen sulfide per 100 dry standard cubic feet of coke oven gas and shall not cause or permit the emission of sulfur dioxide from any stack in excess of 1.98 pounds of sulfur dioxide permillion BTU of actual heat input.

(viii) The General Motors Corporation or any subsequent owner or operator of the Fisher Body Plant at Lorain County, Ohio shall not cause or permit the emission of sulfur dioxide from any stack at the Fisher Body Plant in excess of the rates specified below:

(A) 0.80 pound of sulfur dioxide per million BTU of actual heat input for boilers number 001 and 002.

(B) 0.90 pound of sulfur dioxide per million BTU of actual heat input for boiler number 004.

(C) For all other fossil fuel-fired steam generating units, paragraph (b)(38)(i) or (38)(ii) of this section, shall apply, as applicable.

(ix) Oberlin College or any subsequent owner or operator of the Oberlin College facility in Lorain County, Ohio shall not cause or permit the emission of sulfur dioxide in excess of the rates specified below:

(A) 6.92 pounds of sulfur dioxide per million BTU of actual heat input for coal-fired boilers No. 1 and 2.

(B) 0.35 pounds of sulfur dioxide per million BTU of actual heat input for oil-fired boiler No. 3.

(x) The B. F. Goodrich Company or any subsequent owner or operator of the facility in Lorain County, Ohio shall not cause or permit the emission of sulfur dioxide from any stack in excess of the rates specified below:

(A) 129.0 nanograms of sulfur dioxide per joule (0.30 lbs. SO_2/MMBTU) of actual heat input for oil-fired boilers number 1, 2, 5, and 6.

(B) 2237.1 nanograms of sulfur dioxide per joule (5.20 lbs. SO_2/MMBTU) of actual heat input for coal-fired boilers number 3 and 4.

(21) In Lucas County, no owner or operator of the following types of facilities, unless otherwise specified in this paragraph, shall cause or permit sulfur dioxide emissions from any stack in excess of the rates specified below:

(i) For fossil fuel-fired steam generating units burning coal the emission rate shall be 1.50 pounds of sulfur dioxide per million BTU actual heat input.

(ii) For fossil fuel-fired steam generating units burning oil the emission rate shall be 1.00 pound of sulfur dioxide per million BTU actual heat input.

(iii) The Toledo Edison Company or any subsequent owner or operator of the Bay Shore Station in Lucas County, Ohio shall not cause or permit sulfur dioxide emissions from any stack at the Bay Shore Station in excess of the rates specified below:

(A) 834.6 nanograms of sulfur dioxide per joule (1.94 lbs SO_2/MMBTU) actual heat input for the fossil fuel-fired steam generating units burning coal.

(B) 215.1 nanograms of sulfur dioxide per joule (0.50 lbs SO_2/MMBTU) actual heat input for the fossil fuel-fired peaking unit burning oil.

(iv) Standard Oil of Ohio or any subsequent owner or operator of the Standard Oil of Ohio facility located in Lucas County, Ohio shall not cause or permit sulfur dioxide emissions from any stack at this facility in excess of the rates specified below:

(A) 0.29 pound of sulfur dioxide per million BTU actual heat input for all process heaters and fossil fuel-fired steam-generating units unless otherwise specified in this subparagraph.

(B) 1.00 pound of sulfur dioxide per million BTU actual heat input for process heaters or fossil fuel-fired steam-generating units numbered B024.

(C) 0.50 pound of sulfur dioxide per million BTU actual heat input for process heater or fossil fuel-fired steam-generating unit number B021.

(D) 0.57 pounds of sulfur dioxide per million BTU actual heat input for process heaters or fossil fuel-fired steam-generating units numbered B009, B010, B020, B023, and B025.

(E) 0.92 pound of sulfur dioxide per 1,000 pounds of charging stock for catalytic cracking units and CO boilers connected to a common stack.

(F) 0.40 pound of sulfur dioxide per ton of actual process weight input for any process.

(v) [Reserved]

(vi) The Coulton Chemical Company or any subsequent owner or operator of the Coulton Chemical facility in Lucas County, Ohio shall not cause or permit the emission of sulfur dioxide from any stack at the Coulton Chemical facility in excess of the rates specified below:

(A) 0.00 pounds of sulfur dioxide per million BTU actual heat input for fossil fuel fired steam generating units or process heaters.

(B) 6.50 pounds of sulfur dioxide per ton of 100 percent sulfuric acid produced for sulfuric acid production units.

(vii) The Toledo Edison Company or any subsequent owner or operator of the Acme Power Plant in Lucas County, Ohio shall not cause or permit sulfur dioxide emissions from any stack at the Acme plant in excess or the rates specified below:

(A) 516.2 nanograms of sulfur dioxide per joule (1.20 lbs SO_2/MMBTU) actual heat input for fossil fuel-fired steam generating units burning coal.

(B) 1.00 pound of sulfur dioxide per million BTU actual heat input for fossil fuel-fired steam-generating units burning oil.

(viii) Gulf Oil or any subsequent owner or operator of the Gulf Oil facility in Lucas County, Ohio shall not cause or permit sulfur dioxide emissions from any stack at the Gulf Oil facility in excess of the rates specified below:

(A) 0.90 pound of SO_2 per million BTU actual heat input for fossil fuel-fired steam generating units numbered B001, B002, B003 and B004.

(B) 1.03 pounds of SO_2 per million BTU actual heat input for process heaters or fossil fuel-fired steam generating units numbered B005, B006, and B013.

(C) 1.21 pounds of SO_2 per million BTU actual heat input for process heater numbered B009 and for the stack connecting process heaters numbered B007 and B008.

(D) 1.29 pounds of SO_2 per million BTU actual heat input for process heater number B014.

(E) 1.57 pounds of SO_2 per 1,000 pounds of charging stock for catalytic cracking unit P003 and CO boiler B016 connected to the same stack.

(F) 200 pounds of SO_2 per 2,000 pounds of sulfur processed for sulfur recover plant P005.

(G) Gulf Oil or any subsequent owner or operator of these facilities located in Lucas County, Ohio, shall not cause or permit the combustion of refinery fuel gas at process heaters numbered B010, B011, B012, B015 and for the waste heat boiler stack connecting process heaters numbered B017, B018, B019 and B020 containing a total sulfur content expressed as hydrogen sulfide in excess of 10 grains of hydrogen sulfide per 100 dry standard cubic feet of refinery fuel gas or the emission of SO_2 from any stack of the above units in excess of 0.04 pound of SO_2 per million BTU actual heat input.

(H) Gulf Oil or any subsequent owner or operator of the Gulf Oil facilities located in Lucas County, Ohio shall operate only one of the units numbered B001, B002, B003, and B004 simultaneously with the 3 units numbered B005, B006 and B016.

(I) Gulf Oil or any subsequent owner or operator of the Gulf Oil facilities located in Lucas County, Ohio, shall not operate more than two of the units numbered B001, B002, B003, and B004 simultaneously with two of the units numbered B005, B006 and B016.

(J) Gulf Oil or any subsequent owner or operator of the Gulf Oil facilities located in Lucas County, Ohio shall limit the simultaneous operation of B001, B002, B003, and B004 to the operating configurations specified in paragraphs (b)(39)(viii) (H) and (I) of this section.

(ix) The Toledo Edison Company or an subsequent owner or operator of the

Water Street Steam Plant in Lucas County, Ohio shall not cause or permit sulfur dioxide emissions from any stack at the Water Street Plant in excess of 430.2 nanograms of sulfur dioxide per joule (1.00 lbs SO_2 per MMBTU) actual heat input.

(x) Phillips Petroleum Company or any subsequent owner or operator of the Toledo Philblack Plant in Lucas County, Ohio shall not cause or permit sulfur dioxide emissions from any stack at the Toledo Philblack Plant in excess of the rates specified below:

(A) 4.67 pounds of sulfur dioxide per million BTU actual heat input for any process dryer.

(B) 4.99 pounds of sulfur dioxide per million BTU actual heat input for all fossil fuel-fired steam-generating units, processes and incinerator unless otherwise specified in this paragraph.

(xi) Interlake Incorporated or any subsequent owner or operator of the Interlake Incorporated facility in Lucas County, Ohio shall not cause or permit sulfur dioxide emissions from any stack at this facility in excess of the rates specified below:

(A) 43.0 nanograms of sulfur dioxide per joule (0.10 lbs SO_2 MMBTU) actual heat input for the fossil fuel-fired steam-generating units and the combined maximum hourly allowable heat input rate shall not exceed 300 million BTUs per hour.

(xii) Nabisco or any subsequent owner or operator of the Nabisco facility in Lucas County, Ohio shall not cause or permit sulfur dioxide emissions from any stack at this facility in excess of 1.20 pounds of sulfur dioxide per million BTU actual heat input.

(xiii) The Toledo Hospital or any subsequent owner or operator of the Toledo Hospital in Lucas County, Ohio shall not cause or permit sulfur dioxide emissions from any stack at this facility in excess of 3.50 pounds of sulfur dioxide per million BTU actual heat input.

(xiv) Sun Petroleum Products Company or any subsequent owner or operator of the Sun Petroleum Products Company facility in Lucas County, Ohio shall not cause or permit sulfur dioxide emissions from any stack at the Sun facility in excess of the rates specified below:

(A) Unless otherwise specified in this paragraph, the combustion of refinery fuel gas containing a total sulfur content expressed as hydrogen sulfide in excess of 10 grains of hydrogen sulfide per 100 dry standard cubic feet of refinery fuel gas or the emission of sulfur dioxide from any stack at this facility in excess of 0.04 pounds of sulfur dioxide per million BTU actual heat input.

(B) 0.0 pounds of sulfur dioxide per million BTU actual heat input for fossil fuel-fired steam-generating units or process operation heaters numbered 502, 1901, 1902, 1903, 1904, 1905, and 1906.

(C) 3.00 pounds of sulfur dioxide per 1,000 pounds of charging stock for catalytic cracking units and CO boilers connected to the same stack.

(D) 1.80 pounds of sulfur dioxide per million BTU actual heat input for fossil fuel-fired steam-generating unit numbered 1910.

(E) 1.60 pounds of sulfur dioxide per million BTU actual heat input for fossil fuel-fired process heater units numbered 507 and 508.

(F) 1.50 pounds of sulfur dioxide per million BTU actual heat input for fossil fuel-fired process heater unit numbered 301.

(G) 1.40 pounds of sulfur dioxide per million BTU actual heat input for fossil fuel-fired process heater units numbered 9401.

(H) 1.10 pounds of sulfur dioxide per million BTU actual heat input for fossil fuel-fired process heater units numbered 501 and 503.

(I) 0.90 pounds of sulfur dioxide per million BTU actual heat input for fossil fuel-fired process heater unit numbered 304.

(J) 70 pounds of sulfur dioxide per 1,000 pounds of sulfur processed for sulfur recovery plants.

(K) Fossil fuel-fired process heater units numbered 501 and 503 will not be operated simultaneously with Fossil fuel-fired process heater unit number 507.

(xv) Seneca Petroleum or any subsequent owner or operator of the Seneca Petroleum facility in Lucas County, Ohio shall not cause or permit sulfur dioxide emissions from any stack at the Seneca Petroleum facility in excess of 1.20 pounds of sulfur dioxide per million BTU actual heat input.

(xvi) The Koppers Company Incorporated or any subsequent owner or operator of the Koppers facility in Lucas County, Ohio shall not cause or permit sulfur dioxide emissions from any stack at this facility in excess of the rates specified below:

(A) 111.8 nanograms of sulfur dioxide per joule (0.26 lbs. SO_2 MMBTU) actual heat input for the two new fossil fuel-fired steam-generating units.

(B) 1.69 kilogram of sulfur dioxide per metric ton (3.38 lbs. SO_2 per ton) of actual process weight input for the coke battery.

(22) In Mahoning County, no owner or operator, unless otherwise specified in this paragraph, shall cause or permit the emission of sulfur dioxide in excess of the rates specified below:

(i) For fossil fuel-fired steam-generating units: 0.50 pound of sulfur dioxide per million BTU of actual heat input.

(ii) For process operations: 1.00 pound of sulfur dioxide per ton of actual process weight input.

(iii) No owner or operator shall cause or permit the combustion of by-product coke oven gas from any stack containing a total sulfur content expressed as hydrogen sulfide in excess of 135 grains hydrogen sulfide per 100 dry standard cubic feet of coke oven gas or the emission of sulfur dioxide from any stack in excess of 0.68 pound of sulfur dioxide per million BTU actual heat input.

(iv) The Ohio Edison Company or any subsequent owner or operator of the North Avenue Steam Plant located in Mahoning County shall not cause or permit the emission of sulfur dioxide from any stack at the North Avenue Steam Plant in excess of 4.75 pounds of sulfur dioxide per million BTU of actual heat input.

(v) Lonardo & Sons Greenhouse or any subsequent owner or operator of the Lonardo & Sons Greenhouse facilities located in Mahoning County, Ohio shall not cause or permit the emission of sulfur dioxide from any stack at Lonardo & Sons Greenhouse in excess of 2.00 pounds of sulfur dioxide per million BTU actual heat input.

(vi) Whiteacre-Greer Fireproofing or any subsequent owner or operator of the Whiteacre-Greer facilities located at Mahoning County, Ohio shall not cause or permit the emission of sulfur dioxide from any stack at Whiteacre-Greer in excess of 20 pounds of sulfur dioxide per ton of actual process weight input.

(vii) The Koppers Company or any subsequent owner or operator of the Koppers Company facilities located in Mahoning County, Ohio, shall not cause or permit the emission of sulfur dioxide from the stack connected to boiler number 3 in excess of 4.0 pounds of sulfur dioxide per million BTU actual heat input.

(viii) The Youngstown Sheet and Tube Company or any subsequent owner or operator of the Brier Hill Works located in Mahoning County, Ohio shall not cause or permit the emission of sulfur dioxide from any stack in excess of 0.00 pound sulfur dioxide per million BTU actual heat input.

(ix) The Youngstown Sheet and Tube Company or any subsequent owner or operator of the Campbell and Struthers Works located in Mahoning County, Ohio shall not cause or permit the emission of sulfur dioxide except as specified below:

(A) 2.67 pounds of sulfur dioxide per million BTU actual heat input from any stack at the coke plant.

(B) For the seamless mills, paragraphs (b)(40)(ix)(B) (*1*), (*2*) or (*3*) of this section apply in conjunction with paragraph (b)(40)(ix)(B) (*4*) of this section.

(*1*) 2.67 pounds of sulfur dioxide per million BTU actual heat input from any stack when coke oven gas is being combusted.

(*2*) When mixed gases are being combusted the maximum allowable emission limit from each stack shall be determined by the following equation:

$$EL = BF \times 2.67 \text{ lbs } SO_2/\text{MMBTU}$$

$$BF = \frac{\text{BTU content of coke oven gas}}{\text{BTU content of combined gas}}$$

(*3*) 18.68 pounds of sulfur dioxide per ton of process weight from any stack when any fuel is being combusted.

(*4*) 2309 tons of sulfur dioxide per any 365 day period from the seamless mills as a whole.

(C) For the boilerhouse, paragraphs (b)(40)(ix)(C) (*1*), (*2*), (*3*), (*4*) or (*5*) of this section apply in conjunction with paragraph (b)(40)(ix)(C) (*6*) of this section.

(*1*) 2.67 pounds of sulfur dioxide per million BTU actual heat input from any boiler unit when coke oven gas is being combusted.

(*2*) When mixed gases are being combusted the maximum allowable emission limit from each stack shall be determined by the following equation:

$$EL = BF \times 2.67 \text{ lbs } SO_2/MMBTU$$

$$BF = \frac{\text{BTU content of coke oven gas (from any boiler unit)}}{\text{BTU content of combined gas}}$$

(*3*) 1.06 pounds of sulfur dioxide per million BTU actual heat input from any boiler unit when fuel oil is being combusted.

(*4*) 0.93 pounds of sulfur dioxide per million BTU actual heat input from any boiler unit when tar is being combusted.

(*5*) 4.77 pounds of sulfur dioxide per million BTU actual heat input from any boiler unit when coal is being combusted.

(*6*) 4747 tons of sulfur dioxide per any continuous 365 day period from the boilerhouse as a whole plus the fraction of the 365 day period emission limitation for the seamless mills not consumed by emissions from the seamless mills in the same 365 day period.

(23) In Montgomery County, no owner or operator of any fossil fuel-fired steam generating unit(s), unless otherwise specified in this paragraph, shall cause or permit sulfur dioxide emissions in excess of the rates specified below:

(i) 1.60 pounds sulfur dioxide per million BTU actual heat input for fossil fuel-fired steam generating units.

(ii)-(vii) [Reserved]

(viii) No owner or operator of any process equipment shall cause or permit the emission from any stack any process gas stream containing sulfur dioxide in excess of 2.60 pounds of sulfur dioxide per ton of actual process weight input.

(24) The Portsmouth Gaseous Diffusion Plant in Pike County or any subsequent owner or operator of its fossil fuel-fired steam generating unit shall not cause or permit the emission of sulfur dioxide from any stack in excess of 2650.1 nanograms of sulfur dioxide per joule (6.16 lbs. SO_2/MMBTU).

(25) In Ross County, the Mead Corporation or any subsequent owner or operator of the Mead Corporation facilities at Ross County, Ohio shall not cause or permit emission of sulfur dioxide from any stack in excess of the following rates:

(i) 4.90 pounds of sulfur dioxide per ton of actual solids input.

(ii) 0.00 pound of sulfur dioxide per million BTU actual heat input for stacks 1, 2, 3, and 4. For purposes of this regulation each stack is identified as follows:

Stack No.	Boiler identification
1	1.
2	2.
3	3.
4	Chilpalco No. 5.

(26) In Sandusky County: (i) The Martin Marietta Company or any subsequent owner or operator of the Martin Marietta facilities in Sandusky County, Ohio shall not cause or permit the emission of sulfur dioxide from any stack in excess of 15.42 pounds of sulfur dioxide per ton of actual process weight input.

(ii) [Reserved]

(27) In Stark County, no owner or operator of the following types of facilities, unless otherwise specified in this paragraph, shall cause or permit emission of sulfur dioxide from any stack in excess of the rates specified below:

(i) For fossil fuel-fired steam generating units between 10.0 and 60.0 million BTU per hour total rated capacity of heat input, the emission rate in pounds of sulfur dioxide per million BTU actual heat input shall be calculated by the following equation:

$$EL = 18.48 Q_m^{-0.4886}$$

where Q_m is the total rated capacity of heat input in million BTU per hour and *EL* is the allowable emission rate in pounds of sulfur dioxide per million BTU actual heat input.

(ii) For fossil fuel-fired steam generating units equal to or greater than 60 million BTU per hour total rated capacity of heat input: 2.50 pounds of sulfur dioxide per million BTU actual heat input.

(iii) Republic Steel Corporation or any subsequent owner or operator of

the Massillon facilities in Stark County, Ohio shall not cause or permit the emission of sulfur dioxide from any fossil fuel-fired steam generating unit stack at the Massillon facility in excess of 4.40 pounds of sulfur dioxide per million BTU actual heat input.

(iv) The present or any subsequent owner or operator of the Massillon State Hospital facilities in Stark County, Ohio shall not cause or permit the emission of sulfur dioxide from any stack at this facility in excess of 5.20 pounds of sulfur dioxide per million BTU actual heat input.

(v) The present or any subsequent owner or operator of the Grief Board Company facilities in Stark County, Ohio shall not cause or permit the emission of sulfur dioxide from any stack at this facility in excess of 0.50 pound of sulfur dioxide per million BTU actual heat input.

(vi) The present or subsequent owner or operator of the Timken Company facilities in Stark County, Ohio shall not cause or permit the emission of sulfur dioxide from any fossil fuel-fired steam-generating unit(s) stack at this facility in excess of the rates specified below:

(A) 3.08 pounds of sulfur dioxide per million BTU actual heat input for the stack common to the fossil fuel-fired steam-generating units B001 and B002 at the Canton plant.

(B) 0.93 pounds of sulfur dioxide per million BTU actual heat input for the fossil fuel-fired steam-generating unit B003 at the Canton plant.

(C) 0.0 pounds of sulfur dioxide per million BTU actual heat input for the fossil fuel-fired steam-generating units B003 and B004 at the Gambrinus Plant.

(D) 0.67 pounds of sulfur dioxide per million BTU actual heat input for fossil fuel-fired steam-generating units at the Gambrinus Plant unless otherwise specified in this paragraph.

(vii) No owner or operator of any by-product coke oven operating in Stark County, Ohio shall cause or permit the combustion of by-product coke oven gas containing a total sulfur content expressed as hydrogen sulfide in excess of 350 grains of hydrogen sulfide per 100 dry standard cubic feet of coke oven gas or the emission of sulfur dioxide from any stack in excess of 1.70 pounds of sulfur dioxide per million BTU actual heat input.

(viii) No owner or operator of any process equipment in Stark County, Ohio shall cause or permit the emission of sulfur dioxide from any stack in excess of 80.0 pounds of sulfur dioxide per ton of actual process weight input.

(ix) The Ashland Oil Company, or any subsequent owner or operator of the Ashland Oil Company facilities in Stark County, Ohio shall not cause or permit sulfur dioxide emissions from any stack at this facility in excess of the emission limitations listed below:

(A) 0.025 pounds of sulfur dioxide per million BTU actual heat input for units 4–0–B–3, 4–2–B–1, 4–2–B–2, and 4–27–B–1.

(B) 1.00 pounds of sulfur dioxide per million BTU actual heat input for all process heaters and fossil fuel-fired steam-generating units unless otherwise specified in this paragraph.

(C) 0.62 pounds of sulfur dioxide per 1,000 pounds of charging stack for catalytic cracking units.

(D) 2.00 pounds of sulfur dioxide per 100 pounds of sulfur processed for sulfur recovery plants.

(E) Only two of the following three units may be operated simultaneously: 4–16–B–1, 4–16–B–2, and 4–16–B–12.

(x) The present or any subsequent owner or operator of the Hoover Co. in Stark County, Ohio shall not cause or permit the emission of sulfur dioxide in excess of 8.0 pounds of sulfur dioxide per million BTU actual heat input for the coal-fired boiler and 0.4 pounds of sulfur dioxide per million BTU actual heat input for the gas-fired boiler.

(28) In Summit County, no owner or operator of the following types of facilities, unless otherwise specified in this subparagraph, shall cause or permit emissions of sulfur dioxide from any stack in excess of the rates specified below:

(i) For fossil fuel-fired steam generating units between 10.0 and 300 million BTU per hour total rated capacity of heat input, the emission rate in pounds of sulfur dioxide per million BTU actual heat input shall be calculated by the following equation:

$$EL = 17.55\ Q_m^{-0.3933}$$

where Q_m is the total rated capacity of heat input in million BTU per hour and

EL is the allowable emission rate in pounds of sulfur dioxide per million BTU actual heat input.

(ii) For fossil fuel-fired steam generating unit(s) equal to or greater than 300 million BTU per hour total rated capacity of heat input, 1.80 pounds of sulfur dioxide per million BTU actual heat input.

(iii) The present or any subsequent owner or operator of the Diamond Crystal facility in Summit County, Ohio, shall not cause or permit the emission of sulfur dioxide from coal-fired boilers at this facility in exess of 4.72 pounds of sulfur dioxide per million BTU of actual heat input or the emission of sulfur dioxide from oil-fired boilers at this facility in excess of 0.30 pound of sulfur dioxide per million BTU of actual heat input.

(iv) The present or any subsequent owner or operator of the Kittinger Supply Co. (formerly known as Akwell Industries) facility in Summit County, Ohio, shall not cause or permit the emission of sulfur dioxide from oil-fired —oilers at this facility in excess of 0.80 pound of sulfur dioxide per million BTU of actual heat input or the emission of sulfur dioxide from coal-fired boilers at this facility in excess of 2.38 pounds of sulfur dioxide per million BTU of actual heat input.

(v) The present or subsequent owner or operator of the Ohio Brass Company facilities in Summit County, Ohio shall not cause or permit the emission of sulfur dioxide from any stack at this facility in excess of 4.20 pounds of sulfur dioxide per million BTU actual heat input.

(vi) The present or subsequent owner or operator of the Seiberling Rubber Co. facilities in Summit County, Ohio, shall not cause or permit the emission of sulfur dioxide from any stack at this facility in excess of 1.46 pounds of sulfur dioxide per million BTU actual heat input.

(vii) The present or subsequent owner or operator of the Firestone Tire & Rubber Co. facilities in Summit County, Ohio, shall not cause or permit the emission of sulfur dioxide from any stack at this facility in excess of the rates specified below:

(A) 1.76 pounds of sulfur dioxide per million BTU of actual heat input from boiler 21 when oil fired and 2.87 pounds of sulfur dioxide per million BTU of actual heat input from boilers 22 and 23 when coal fired.

(B) In lieu of meeting paragraph (59)(vii)(A) of this paragraph (b), the Firestone Tire and Rubber Co. may elect to comply with the alternate emission limitation of 2.20 pounds of sulfur dioxide per million BTU of actual heat input from boilers 21, 22, and 23 when all are oil fired.

(C) Firestone Tire & Rubber Co. or any subsequent owner or operator of the Firestone Tire & Rubber facilities located in Summit County, Ohio, shall operate no more than two of the boilers, 21, 22, or 23 simultaneously whether complying with either § 52.1881 (b) (59) (vii) (A) or § 52.1881 (b) (59) (vii) (B).

(viii) The present or subsequent owner or operator of the B. F. Goodrich Co. facilities in Summit County, Ohio, shall not cause or permit the emission of sulfur dioxide from any stack at this facility in excess of the rates specified below:

(A) 0.51 pound of sulfur dioxide per million BTU actual heat input for oil-fired boiler 31.

(B) 7.0 pounds of sulfur dioxide per million BTU actual heat input for coalfired Boilers #27 and #32.

(C) The B. F. Goodrich Co. or any subsequent owner or operator of the B. F. Goodrich facilities in Summit County, Ohio, shall not operate boiler 27 simultaneously with boiler 32.

(ix) The Goodyear Tire & Rubber Co. or any subsequent owner or operator of the Goodyear facilities in Summit County, Ohio, shall not cause or permit the emission of sulfur dioxide from any stack in excess of the rates specified below:

(A) 4.47 pounds of sulfur dioxide per million BTU actual heat input for fossil fuel-fired steam-generating unit B001 located at plant I.

(B) 0.50 pound of sulfur dioxide per million BTU actual heat input for fossil fuel-fired steam-generating units B002 and B003 located at plant I.

(C) 160 pounds of sulfur dioxide per 1,000 pounds of sulfur processed, for the sulfur recovery unit(s).

(D) for Plant II boilers:

(*1*) 2.24 pounds of sulfur dioxide per million BTU actual heat input for coal-

fired boilers A and B exiting through stack 4.

(*2*) 2.24 pounds of sulfur dioxide per million BTU actual heat input for coal-fired boiler C exiting through stack 5.

(*3*) 2.24 pounds of sulfur dioxide per million BTU acutal heat input for coal-fired boiler D exiting through stack 6.

(E) In lieu of meeting paragraph (59)(ix)(D) of this paragraph (b), The Goodyear Tire and Rubber Company may elect to comply with the alternate emission limitations and operating conditions specified below for Plant II boilers, provided the General Tire and Rubber Company or any subsequent owner or operator of the General Tire facilities in Summit County, Ohio complies with §52.1881(b)(xviii)(D):

(*1*) The Goodyear Tire and Rubber Company shall not cause or permit the emission of sulfur dioxide from any stack in excess of the rates specified below:

(*i*) 4.64 pounds of sulfur dioxide per million BTU actual heat input for coal-fired boilers A, B, and C exiting through stack 4.

(*ii*) 4.64 pounds of sulfur dioxide per million BTU actual heat input for coal-fired boiler D exiting through stack 6.

(*2*) The Goodyear Tire and Rubber Company shall operate no more than three of the boilers A, B, C, or D simultaneously.

(*3*) The Goodyear Tire and Rubber Company shall not operate boiler D simultaneously with boilers A and B.

(x) The present or any subsequent owner or operator of the Tecumseh Company facilities in Summit County, Ohio shall not cause or permit sulfur dioxide emissions from fossil fuel-fired steam generating unit(s) in excess of the rates specified below:

(A) 1.70 pounds sulfur dioxide per million BTU actual heat input for coal-fired units, and

(B) 0.70 pound sulfur dioxide per million BTU actual heat input for oil-fired unit(s).

(xi) The Ohio Edison or any subsequent owner or operator of the Ohio Edison Company's Beech Street power station in Summit County, Ohio, shall not cause or permit the emission of sulfur dioxide from any stack at the Beech Street plant in excess of 0.00 pounds of sulfur dioxide per million BTU actual heat input.

(xii) The Ohio Edison Co. or any subsequent owner or operator of the Ohio Edison Co.'s Gorge plant in Summit County, Ohio, shall not cause or permit the emission of sulfur dioxide from any stack at the Gorge plant in excess of 4.07 pounds of sulfur dioxide per million BTU actual heat input.

(xiii) No owner or operator of any process equipment, unless otherwise specified in this paragraph, shall cause or permit the emission of sulfur dioxide from any stack containing sulfur dioxide in excess of 17.0 pounds of sulfur dioxide per ton of actual process weight input.

(xiv) PPG Industries or any subsequent owner or operator of the PPG Industries facilities in Summit County, Ohio, shall not cause or permit the emission of sulfur dioxide from any stack at this facility in excess of 0.00 pounds of sulfur dioxide per million BTU actual heat input for each coal-fired unit.

(xv) PPG Industries, or any subsequent owner or operator of the PPG Industries, Inc., Columbia Cement Plant, located in Summit County, Ohio, shall not cause or permit the emission of sulfur dioxide from any stack in excess of 0.0 pounds of sulfur dioxide per ton actual process weight input for the kilns.

(xvi) The present or any subsequent owner or operator of the Midwest Rubber Co. in Summit County, Ohio, shall not cause or permit the emission of sulfur dioxide from any stack at this facility in excess 1.80 pounds of sulfur dioxide per million BTU actual heat input.

(xvii) The present or any subsequent owner or operator of the Terex Division of General Motors Corp. in Summit County, Ohio, shall not cause or permit the emission of sulfur dioxide from any stack at this facility in excess of 0.85 pounds of sulfur dioxide per million BTU actual heat input.

(xviii) The present or any subsequent owner or operator of the General Tire & Rubber Co. in Summit County, Ohio, shall not cause or permit the emission of sulfur dioxide from any stack at this facility in excess of the rates specified below:

(A) 0.46 pound of sulfur dioxide per million BTU actual heat input for oil-fired boiler 1 when exiting through stack S–35.

(B) 0.46 pound of sulfur dioxide per million BTU actual heat input for oil-fired boiler 2 when exiting through stack S–36.

(C) 0.46 pound of sulfur dioxide per million BTU actual heat input for oil-fired boiler 3 when exiting through stack S–37.

(D) In lieu of meeting paragraph (59)(xviii) (A), (B), and (C) of this paragraph (b), The General Tire and Rubber Company may elect to comply with the alternate emission limitations and operating conditions specified below, provided the Goodyear Tire and Rubber Company or any owner of operator of the Goodyear Tire and Rubber Plant II facilities in Summit County, Ohio, complies with § 52.1881(b)(ix)(E):

(*1*) The General Tire and Rubber Company shall not cause or permit the emission of sulfur dioxide from any stack in excess 2.47 pounds of sulfur dioxide per million BTU actual heat input for oil-fired boilers 1, 2, and 3 when exiting through one-175 foot stack consistent with section 123 of the Clean Air Act, as amended.

(xix) The present or any subsequent owner or operator of the Goodyear Aerospace Co. in Summit County, Ohio, shall not cause or permit the emission of sulfur dioxide from any stack at AB boilerhouse of this facility in excess of 1.10 pounds of sulfur dioxide per million BTU of actual heat input or the emission of sulfur dioxide from any stack at D boilerhouse of the facility in excess of 1.83 pounds of sulfur dioxide per million BTU of actual heat input.

(xx) The present or any subsequent owner or operator of the B. F. Goodrich Chemical Co. in Summit County, Ohio, shall not cause the emission of sulfur dioxide from any stack at this facility in excess of 5.22 pounds of sulfur dioxide per million BTU actual heat input.

(xxi) The present or any subsequent owner or operator of the Chrysler Corp. in Summit County, Ohio, shall not cause or permit the emission of sulfur dioxide from any stack at this facility in excess of the rates specified below:

(A) 0.86 pound of sulfur dioxide per million BTU actual heat input for boiler No. B001.

(B) 1.19 pounds of sulfur dioxide per million BTU actual heat input for boilers Nos. B002 and B003.

(29) In Washington County: (i) The Shell Oil Company or any subsequent owner or operator of the Shell Oil facilities at Washington County, Ohio shall not cause or permit the emission of sulfur dioxide from any stack at this facility in excess of 2.50 pounds of sulfur dioxide per million BTU actual heat input.

(ii) [Reserved]

(30) In Wood County, no owner or operator of any fossil fuel-fired steam generating unit or process operation heater shall cause or permit the emission of sulfur dioxide from any stack in excess of 1.10 pounds of sulfur dioxide per million BTU actual heat input.

(i) Bowling Green University or any subsequent owner of the Bowling Green facility in Wood County, Ohio, shall not cause or permit the emission of sulfur dioxide from any stack at this facility in excess of 5.5 pounds of sulfur dioxide per million BTU actual heat input.

[39 FR 13542, Apr. 15, 1974]

EDITORIAL NOTE: For FEDERAL REGISTER citations affecting § 52.1881, see the List of CFR Sections Affected in the Finding Aids section of this volume.

§ 52.1882 Compliance schedules.

(a) *Federal compliance schedules.* (1) Except as provided in paragraph (a)(5) of this section, the owner or operator of any process equipment subject to applicable paragraphs of § 52.1881(b), shall comply with the compliance schedule in paragraph (a)(2) of this section.

(2) Any owner or operator of any process equipment subject to applicable paragraphs of § 52.1881(b) of this chapter shall take the following actions to comply with the requirements of said regulation with respect to that source no later than the date specified.

(i) 8 weeks from the date of promulgation—Submit preliminary control plans to the Administrator.

(ii) 25 weeks from the date of promulgation—Submit final control plan to the Administrator.

(iii) 34 weeks from the date of promulgation—Award contracts for emissions control systems or process modification, or issue orders for purchase of component parts to accomplish emission control or process modification and notify the Administrator in writing that such action was taken.

(iv) 52 weeks from the date of promulgation—Initiate on-site construction or installation of emission control equipment or process change and notify the Administrator in writing that such action was taken.

(v) 139 weeks from the date of promulgation—Complete construction or installation of emission control equipment or process change and notify the Administrator in writing that such action was taken.

(vi) 154 weeks from the date of promulgation—Complete shakedown operations and performance test on source, submit performance test results to the Administrator and achieve final compliance with § 52.1881(b) of this chapter, as applicable.

(3) Except as provided in paragraph (a)(5) of this section, the owner or operator of any stack venting any fossil fuel-fired steam generating unit(s) subject to § 52.1881(b) of this chapter shall comply the applicable compliance schedule in paragraph (a)(4) of this section.

(4)(i) The owner or operator of any stack venting any fossil fuel fired steam generating unit(s) subject to § 52.1881(b) of this chapter who elects to comply with an applicable optional emission limitation specified in § 52.1881(b) of this chapter, shall notify the Administrator no later than eight weeks after the date of this promulgation of the specific emission limitations selected. Failure to select applicable optional emission limitations shall result in the facility being subject to the single uniform emission limitation for all stacks at that facility specified in § 52.1881(b). Notice received later than eight weeks after the date of promulgation shall be invalid.

(ii) The owner or operator of any fossil fuel-fired steam generating unit(s) subject to applicable paragraphs of § 52.1881(b) of this chapter shall notify the Administrator no later than eight weeks after the date of promulgation of his intent to utilize either low-sulfur fuel including blended or washed coal or flue gas desulfurization to comply with the requirements of said regulation.

(iii) Any owner or operator of any stack venting any fossil fuel-fired steam generating unit(s) subject to applicable paragraphs of § 52.1881(b) of this chapter who elects to utilize low-sulfur fuel including blended or washed coal to comply with the requirements of said regulation shall take the following actions with respect to that source no later than the date specified:

(*a*) 8 weeks from the date of promulgation—Submit to the Administrator a projection for 10 years of the amount of fuel by types that will be substantially adequate to enable compliance with § 52.1881(b) of this chapter, as applicable.

(*b*) 32 weeks from the date of promulgation—Submit data demonstrating the availability of the fuel meeting the requirements projected in paragraph (a)(4)(iii)(*a*) of this section, to the Administrator.

(*c*) 36 weeks from the date of promulgation—Submit a statement to the Administrator as to whether boiler modifications will or will not be required. If modifications will be required, submit plans for such modifications.

(*d*) 50 weeks from the date of promulgation—Let contracts for necessary boiler modifications, if applicable, and notify the Administrator in writing that such action was taken.

(*e*) 60 weeks from the date of promulgation—Initiate on-site modifications, if applicable, and notify the Administrator in writing that such action was taken.

(*f*) 118 weeks from the date of promulgation—Complete on-site modification, if applicable, and notify the Administrator in writing that such action was taken.

(*g*) 122 weeks from the date of promulgation—Achieve final compliance with the emission limitation of § 52.1881(b) of this chapter, as applicable, and notify the Administrator in writing that such action was taken.

(iv) Any owner or operator of any stack venting any fossil fuel-fired steam generating unit(s) subject to applicable paragraphs of § 52.1881(b) of

this chapter who elects to utilize flue gas desulfurization to comply with the requirements of said regulations shall take the following actions with respect to the source no later than the date specified.

(*a*) 17 weeks from the date of promulgation—Let necessary contracts for construction and notify the Administrator in writing that such action was taken.

(*b*) 61 weeks from the date of promulgation—Initiate on-site construction and notify the Administrator in writing that such action was taken.

(*c*) 145 weeks from the date of promulgation—Complete on-site construction and notify the Administrator in writing that such action was taken.

(*d*) 156 weeks from the date of promulgation—Complete shakedown operations and performance test on source, submit performance test results to the Administrator and achieve final compliance with § 52.1881(b) of this chapter, as applicable.

(5)(i) None of the preceding paragraphs of this paragraph shall apply to any owner or operator of a source which is presently in compliance with the applicable paragraphs of § 52.1881(b) of this chapter.

(ii) Any owner or operator of a source capable of emitting 100 tons of sulfur dioxide per year from all stacks at any facility who is presently in compliance with the applicable paragraphs of § 52.1881(b) of this chapter shall so certify to the Administrator by four weeks from the date of promulgation.

(iii) Any owner or operator subject to a compliance schedule in this paragraph who elects to achieve compliance by means not covered by this paragraph may submit to the Administrator no later than six weeks from the date of promulgation a proposed alternative compliance schedule. For process equipment subject to applicable paragraphs of § 52.1881(b) of this chapter no such compliance schedule may provide for final compliance after the final compliance date in paragraph (a)(2) of this section. For any stack venting any fossil fuel-fired steam generating unit(s) subject to applicable paragraphs of § 52.1881(b) of this chapter, which will utilize low-sulfur fuel including blended or washed coal to comply with the requirements of said regulations, no such compliance schedule may provide for final compliance after final compliance date in paragraph (a)(4)(iii) of this section. For any stack venting any fossil fuel-fired steam generating unit(s) subject to applicable paragraphs of § 52.1881(b) of this chapter, which will utilize flue gas desulfurization to comply with the requirements of said regulations, no such compliance schedule may provide for final compliance after the final compliance date in paragraph (a)(4)(iv) of this section.

(iv) Any owner or operator of any process equipment subject to applicable paragraphs of § 52.1881(b) of this chapter who submits an alternative compliance schedule pursuant to § 52.1882(a)(5)(iii) of this chapter shall remain subject to the provisions of § 52.1882(a)(2) of this chapter until the alternative schedule is approved by the Administrator.

(v) Any owner or operator of any stack venting any fossil fuel-fired steam generating unit(s) subject to applicable paragraphs of § 52.1881(b) of this chapter who submits an alternative compliance schedule pursuant to § 52.1881(a)(5)(iii) of this chapter shall remain subject to the provisions of § 52.1882(a)(4) of this chapter until the alternative schedule is approved by the Administrator.

(6) Nothing in this paragraph shall preclude the Administrator from promulgating a separate schedule for any source to which the application of the compliance schedules in paragraph (d)(2), or (4) of this section fails to satisfy the requirements of § 51.15 (b) and (c) of this chapter.

(b) Federal compliance schedule for petitioners in *Buckeye Power, Inc. et al.* v. *USEPA,* No. 76–2090 et al.

(1) Except as provided in paragraph (b)(5) of this section, the owner or operator of any process equipment subject to applicable paragraphs of § 52.1881(b) shall comply with the compliance schedule in paragraph (b)(2) of this section.

(2) Any owner or operator of any process equipment subject to applicable paragraphs of § 52.1881(b) of the chapter shall take the following actions to comply with the requirements

of said regulation with respect to that source no later than the date specified.

(i) 8 weeks from June 17, 1977: Submit preliminary control plans to the Administrator.

(ii) 25 weeks from June 17, 1977: Submit final control plan to the Administrator.

(iii) 34 weeks from June 17, 1977: Award contracts for emissions control systems or process modification, or issue orders for purchase of component parts to accomplish emission control or process modification and notify the Administrator in writing that such action was taken.

(iv) 52 weeks from June 17, 1977: Initiate on-site construction or installation of emission control equipment or process change and notify the Administrator in writing that such action was taken.

(v) 139 weeks from June 17, 1977: Complete construction or installation of emission control equipment or process change and notify the Administrator in writing that such action was taken.

(vi) 154 weeks from June 17, 1977: Complete shakedown operations and performance test on source, submit performance test results to the Administrator and achieve final compliance with §52.1881(b) of this chapter, as applicable.

(3) Except as provided in paragraph (5) of this paragraph (b), the owner or operator of any stack venting any fossil fuel-fired steam-generating unit(s) subject to §52.1881(b) of this chapter shall comply with the applicable compliance schedule in paragrah (b)(4) of this section.

(4)(i) The owner or operator of any stack venting any fossil fuel-fired steam generating unit(s) or process subject to §52.1881(b) of this chapter who elects to comply with an applicable optional emission limitation specified in §52.1881(b) of this chapter, shall notify the Administrator no later than 17 weeks after June 17, 1977 of the specific emission limitations selected. Failure to select applicable optional emission limitations shall result in the facility being subject to the single uniform emission limitation for all stacks at that facility specified in §52.1881(b). Notice received later than 17 weeks after June 17, 1977 shall be invalid.

(ii) The owner or operator of any fossil fuel-fired steam generating unit(s) subject to applicable paragraphs of §52.1881(b) of this chapter shall notify the Administrator no later than 17 weeks after June 17, 1977 of his intent to utilize either low-sulfur fuel including blended or washed coal or flue gas desulfurization to comply with the requirements of said regulation.

(iii) Any owner or operator of any stack venting any fossil fuel-fired steam generating unit(s) subject to applicable paragraphs of §52.1881(b) of this chapter who elects to utilize low sulfur fuel including blended or washed coal to comply with the requirements of said regulation shall take the following actions with respect to that source no later than the date specified:

(A) 17 weeks after June 17, 1977: Submit to the Administrator a projection for ten years of the amount of fuel by types that will be substantially adequate to enable compliance with §52.1881(b) of this chapter, as applicable.

(B) 32 weeks from June 17, 1977: Submit data demonstrating the availability of the fuel meeting the requirements projected in paragraph (a) of this section to the Administrator.

(C) 36 weeks after June 17, 1977: Submit a statement to the Administrator as to whether boiler modifications will or will not be required. If modifications will be required, submit plans for such modifications.

(D) 50 weeks from June 17, 1977: Let contracts for necessary boiler modifications, if applicable, and notify the Administrator in writing that such action was taken.

(E) 60 weeks after June 17, 1977: Initiate on-site modifications, if applicable, and notify the Administrator in writing that such action was taken.

(F) 118 weeks from June 17, 1977: Complete on-site modification, if applicable, and notify the Administrator in writing that such action was taken.

(G) 122 weeks from June 17, 1977: Achieve final compliance with the emission limitation of §52.1881(b) of this chapter, as applicable, and notify the Administrator in writing that such action was taken.

(iv) Any owner or operator of any stack venting any fossil fuel-fired

steam generating unit(s) subject to applicable paragraphs of § 52.1881(b) of this chapter who elects to utilize flue gas desulfurization to comply with the requirements of said regulations shall take the following actions with respect to the source no later than the date specified.

(A) 17 weeks from June 17, 1977: Let necessary contracts for construction and notify the Administrator in writing that such action was taken.

(B) 61 weeks from June 17, 1977: Initiate on-site construction and notify the Administrator in writing that such action was taken.

(C) 145 weeks from June 17, 1977: Complete on-site construction and notify the Administrator in writing that such action was taken.

(D) 156 weeks from June 17, 1977: Complete shakedown operations and performance test on source, submit performance test results to the Administrator and achieve final compliance with § 52.1881(b) of this chapter, as applicable.

(5)(i) None of the preceding paragraphs of this section shall apply to any owner or operator of a source which is presently in compliance with the applicable paragraphs of § 52.1881(b) of this chapter.

(ii) Any owner or operator of a source capable of emitting 100 tons of sulfur dioxide per year from all stacks at any facility who is presently in compliance with the applicable paragraphs of § 52.1881(b) of this chapter shall so certify to the Administrator by four weeks from June 17, 1977.

(iii) Any owner or operator subject to a compliance schedule in this paragraph who elects to achieve compliance by means not covered by this paragraph may submit to the Administrator no later than six weeks from June 17, 1977, a proposed alternative compliance schedule. For process equipment subject to applicable subparagraphs of § 52.1881(b) of this chapter no such compliance schedule may provide for final compliance after the final compliance date in paragraph (b)(2) of this section. For any stack venting any fossil fuel-fired steam-generating unit(s) subject to applicable paragraphs of § 52.1881(b) of this chapter, which will utilize low-sulfur fuel including blended or washed coal to comply with the requirements of said regulations, no such compliance schedule may provide for final compliance after final compliance date in paragraph (b)(4)(iii) of this section. For any stack venting any fossil fuel-fired steam-generating unit(s) subject to applicable paragraphs of § 52.1881(b) of this chapter, which will utilize flue gas desulfurization to comply with the requirements of said regulations, no such compliance schedule may provide for final compliance after the final compliance date in paragraph (b)(4)(iv) of this section.

(iv) Any owner or operator of any process equipment subject to applicable paragraphs of § 52.1881(b) of this chapter who submits an alternative compliance schedule pursuant to § 52.1882(b)(5)(iii) of this chapter shall remain subject to the provisions of § 52.1882(b)(2) of this chapter until the alternative schedule is approved by the Administrator.

(v) Any owner or operator of any stack venting any fossil fuel-fired steam-generating unit(s) subject to applicable paragraphs of § 52.1881(b) of this chapter who submits an alternative compliance schedule pursuant to § 52.1882(b)(5)(iii) of this chapter shall remain subject to the provisions of § 52.1882(b)(4) of this chapter until the alternative schedule is approved by the Administrator.

(6) Nothing in this paragraph shall preclude the Administrator from promulgating a separate schedule for any source to which the application of the compliance schedules in paragraphs (b)(2) or (4) of this section fails to satisfy the requirements of § 51.15 (b) and (c) of this chapter.

(7) Section 52.1882(b)(4)(iii)(G) is suspended for Cleveland Electric Illuminating Company's Eastlake and Avon Lake facilities pending final rulemaking on the June 12, 1979 (44 FR 33712) proposed revision to the Ohio State Implementation Plan, but in no event will the suspension extend beyond the plan attainment date of June 17, 1980.

(8) Federal compliance schedules for the Toledo Edison Acme Power Plant coal fired units and the Water Street Steam Plant oil fired units is as set forth in § 52.1882(b) except that

§ 52.1882(b)(4)(iii)(G) is changed, for these units only, as follows: April 15, 1980: Achieve final compliance with the emission limitation of § 52.1881(b) of this chapter, as applicable, and notify the Administrator in writing that such action was taken.

(c) Federal compliance schedule for Ashland Oil Company is set forth in § 52.1882(b), except that all references to June 17, 1977 are changed to September 14, 1979.

(d) Monitoring and reporting requirement for non-simultaneous operation.

(1) Any owner or operator of any source of sulfur dioxide subject to a provision of § 52.1881 of this chapter which limits the combination of point sources which the source may operate at any time shall, in addition to any other reporting requirements of this chapter, comply with the following:

(i) Install not later than the date by which compliance with the applicable emission limitation of § 52.1881 is required a device(s) to determine and record the time of operation of each such point source;

(ii) Retain such records for at least two years; and

(iii) Report to the Administrator within 30 days of each such occurrence any period during which sources are operated in any combination not allowed by an applicable requirement of § 52.1881.

(e)(1) The Federal compliance schedule for sources in Summit County identified in § 52.1875, footnote ''f'' is set forth in § 52.1882(b) except that all references to June 17, 1977, are changed to January 4, 1980.

(2) The owner or operator of any fossil-fuel fired steam generating unit in Summit County with alternative emission limitations specified for one or more units at its facility in § 52.1881(b)(59) shall notify the Administrator no later than 17 weeks after January 4, 1980 of the applicable emission limitation selected.

Failure to indicate a selected emission limitation shall result in each unit at a facility being subject to the first emission limitation specified for that unit in the applicable regulation.

(f) The Federal Compliance schedule for the PPG Industries, Inc. boilers in Summit County, Ohio is set forth in § 52.1882(b) except that all references to June 17, 1977, are changed to August 25, 1980.

(g) Monitoring and reporting requirements for sources subject to reduced operating load requirements.

(1) Any owner or operator of any source of sulfur dioxide subject to a provision of § 52.1881 of this chapter which limits the operating level of any point source at any time shall, in addition to any other reporting requirements of this chapter, comply with the following:

(i) Install, not later than the date by which compliance with the applicable emission limitation of § 52.1881 is required, a device(s) to determine and record the level of operation of each such point source;

(ii) Retain such records for at least two years; and

(iii) Report to the Administrator within 30 days of each such occurrence any period during which any source is operated above the specified operating level allowed by an applicable requirement of § 52.1881.

(h) The federal compliance schedule for Ohio Power Company's Cardinal plant in Jefferson County and Muskingum River plant in Washington and Morgan Counties and Columbus and Southern Ohio Electric Company's Conesville plant in Coshocton County is setforth in § 52.1882(b) except that all references to June 17, 1977, are changed to June 19, 1980.

(i) If the owner or operator of the Columbus and Southern Ohio Electric Company's Conesville plant in Coshocton County elects to comply with the emission limitation set forth in § 52.1881(b)(21) by installing a coal-washing facility, the owner or operator shall meet the following compliance schedule in lieu of meeting the compliance schedule set forth in § 52.1882(b).

(1) 4 weeks from date of promulgation of this schedule: Notify the Administrator of intent to use washed coal to comply with sulfur dioxide emission limitations for the Conesville steam plant; submit a projection for ten years of the amount of coal necessary to enable compliance at this facility; submit the quality specifications of the fuel that is to be used. Such specifications

shall include sulfur content, ash content, heat and moisture content.

(2) 8 weeks from date of promulgation of this schedule: Submit data to the Administrator demonstrating the availability of fuel necessary to achieve compliance at the Conesville steam plant. Such data shall consist of copies of signed contracts withcoal suppliers and/or signed contracts with a vendor pursuant to which the utility shall construct a coal preparation facility; submit statement to the Administrator as to whether boiler modifications at the Conesville steam plant will be required for combustion of the prepared (washed) complying coal. If boiler modifications are required, submit plans for such modifications.

(3) 8 weeks from date of promulgation of this schedule: If a coal preparation facility is to be constructed by the utility for preparing all or a portion of the fuel for combustion at the Conesville steam plant, submit to the Administrator a plant detailing actions to be taken to ensure completion of construction and startup in sufficient time to provide complying fuel for the final compliance date.

(4) 52 weeks from June 19, 1980: Complete engineering and specifications for the coal preparation facility.

(5) 64 weeks from June 19, 1980: Award contract for construction of the coal preparation facility providing incentives to the contractor to expedite the project.

(6) 108 weeks from June 19, 1980: Initiate on-site construction of the new coal preparation facility.

(7) 152 weeks from June 19, 1980: Complete construction of the coal preparation facility.

(8) 52 weeks from June 19, 1980: Submit to the Administrator a continuous monitoring plan detailing the equipment to be installed, equipment locations, and data reduction techniques as well as schedule of installation.

(9) 104 weeks from June 19, 1980: Complete installation and certification of sulfur dioxide monitors on stacks 1, 2 and 3 at the Conesville steam plant.

(10) 152 weeks from June 19, 1980: Complete any necessary boiler modifications to the Conesville steam plant units 1–4.

(11) 156 weeks (three years) from June 19, 1980: Achieve and demonstrate compliance at units 1–4 of the Conesville steam plant with the applicable emission limitation in § 52.1881 of this chapter.

(j) The Federal compliance schedule for the Portsmouth Gaseous Diffusion Plant in Pike County is set forth in § 52.1882(b) except that all references to June 17, 1977 are changed to (the effective date of promulgation).

(k) The Federal compliance schedule for the Ohio Power Company Gavin Power Plant in Gallia County is set forth in § 52.1882(b) except that all references to June 17, 1977 are changed to August 25, 1982.

(l) The Federal compliance schedule for the LTV Steel Company, Inc., in Cuyahoga County is as follows:

(1) 6 months from the date of promulgation—Achieve final compliance with § 52.1881(b) for all sources except Boilers 26–34, Boilers A through D, and Coke Plant No. 2 Car Thaw.

(2) Achieve final compliance with § 52.1881(b) for Boilers 26–34, Boilers A through D, and Coke Plant No. 2 Car Thaw by March 17, 1994.

[41 FR 36339, Aug. 27, 1976, as amended at 42 FR 27592, May 31, 1977; 44 FR 47772, Aug. 15, 1979; 45 FR 30069, May 7, 1980; 45 FR 49552, July 25, 1980; 45 FR 73929, Nov. 7, 1980; 46 FR 21769, Apr. 14, 1981; 46 FR 23927, Apr. 29, 1981; 46 FR 24948, May 4, 1981; 46 FR 49125, Oct. 6, 1981; 47 FR 32123, July 26, 1982; 58 FR 46871, Sept. 3, 1993]

§ 52.1883 [Reserved]

§ 52.1884 Significant deterioration of air quality.

(a) The requirements of sections 160 through 165 of the Clean Air Act are not met, since the plan does not include approvable procedures for preventing the significant deterioration of air quality.

(b) Regulations for preventing significant deterioration of air quality. The provisions of § 52.21 (b) through (w) are hereby incorporated and made a part of the applicable state plan for the State of Ohio.

(c) All applications and other information required pursuant to § 52.21 from sources in the State of Ohio shall be submitted to the Director of the

Ohio Environmental Protection Agency, P.O. Box 1049, Columbus, Ohio 43216 instead of the EPA Region V office.

[45 FR 52741, Aug. 7, 1980, and 46 FR 9584, Jan. 29, 1981]

§ 52.1885 Control strategy: Ozone.

(a) *Part D—Approval.* The following portions of the Ohio plan are approved:

(1) The ozone portions of rules 01, 02, 03, 04 (except the portion disapproved below), 05, 06, 07, 08, 09 (except the portions conditionally approved below) and 10 of Chapter 3745–21 of the Ohio Administrative Code.

(2) The Attainment Demonstrations for the following urban areas: Akron, Canton, Cincinnati, Cleveland, Columbus, Dayton, Toledo and Youngstown.

(3) The Reasonable Further Progress Demonstration for the following areas: Akron, Canton, Cincinnati, Cleveland, Columbus, Dayton, Toledo and Youngstown.

(4) The ozone nonattainment area plan for the rural nonattainment areas.

(b) The maintenance plans for the following counties are approved:

(1) Preble County.

(2) Columbiana County.

(3) Jefferson County.

(4) Montgomery, Greene, Miami, and Clark Counties. This plan includes implementation of Stage II vapor recovery and an enhanced vehicle inspection and maintenance program.

(5) Lucas and Wood Counties.

(6) Franklin, Delaware, and Licking Counties.

(7) Stark County.

(8) Mahoning and Trumbull Counties.

(9) Clinton County

(10) Lorain, Cuyahoga, Lake, Ashtabula, Geauga, Medina, Summit, and Portage Counties.

(c) *Disapproval.* USEPA disapproves the compliance schedule in revised rule 04(c)(18) of Chapter 3745–21 of the Ohio Administrative Code as it applies to facilities formerly covered by the compliance schedule in old rule 04(c)(1) of Chapter 3745–21. This disapproval in and of itself does not result in the growth restrictions of section 110(a)(2)(I).

(d) *Part D—No Action.* USEPA at this time takes no action on the vehicle inspection and maintenance (I/M) program required for those non-attainment areas which have requested an extension to demonstrate ozone attainment.

(e)–(q) [Reserved]

(r) Approval—USEPA is approving two exemption requests submitted by the Ohio Environmental Protection Agency on September 20, 1993, and November 8, 1993, for the Toledo and Dayton ozone nonattainment areas, respectively, from the requirements contained in Section 182(f) of the Clean Air Act. This approval exempts the Lucas, Wood, Clark, Greene, Miami, and Montgomery Counties from the requirements to implement reasonably available control technology (RACT) for major sources of nitrogen oxides (NO_X), nonattainment area new source review (NSR) for new sources and modifications that are major for NO_X, and the NO_X-related requirements of the general and transportation conformity provisions. For the Dayton ozone nonattainment area, the Dayton local area has opted for an enhanced inspection and maintenance (I/M) program. Upon final approval of this exemption, the Clark, Greene, Miami, and Montgomery Counties shall not be required to demonstrate compliance with the enhanced I/M performance standard for NO_X. If a violation of the ozone NAAQS is monitored in the Toledo or Dayton area(s), the exemptions from the requirements of Section 182(f) of the Act in the applicable area(s) shall no longer apply.

(s) Approval—The 1990 base-year ozone emissions inventory requirement of Section 182(a)(1) of the Clean Air Act has been satisfied for the following ozone nonattainment areas: Toledo (Lucas and Wood Counties) and Dayton (Clark, Greene, Miami, and Montgomery Counties).

(t) [Reserved]

(u) Approval—The 1990 base-year ozone emissions inventory requirement of Section 182(a)(1) of the Clean Air Act has been satisfied for the Columbus ozone nonattainment area (which includes the Counties of Delaware, Franklin, and Licking).

(v) Approval—The 1990 base-year ozone emissions inventory requirement of Section 182(a)(1) of the Clean Air Act has been satisfied for the Canton (Stark County); Cincinnati-Hamilton

(Butler, Clermont, Hamilton and Warren Counties); Cleveland-Akron-Lorain (Ashtabula, Cuyahoga, Geauga, Lake, Lorain, Medina, Portage and Summit Counties); and Youngstown-Warren-Sharon (Mahoning and Trumbull Counties) areas.

(w) Determination—USEPA is determining that, as of May 7, 1996, the Cleveland-Akron-Lorain ozone nonattainment area (which includes the Counties of Ashtabula, Cuyahoga, Geauga, Lake, Lorain, Medina, Portage and Summit) have attained the ozone standard and that the reasonable further progress and attainment demonstration requirements of section 182(b)(1) and related requirements of section 172(c)(9) of the Clean Air Act do not apply to the area.

(x) *Approval*—The USEPA is approving exemption requests submitted by the State of Ohio on March 18, November 1, and November 15, 1994, from the requirements contained in Section 182(f) of the Clean Air Act. This approval exempts the following counties in Ohio from the NO_X-related general and transportation conformity provisions, and nonattainment area NSR for new sources and modifications that are major for NO_X: Clinton, Columbiana, Delaware, Franklin, Jefferson, Licking, Mahoning, Preble, Stark, and Trumbull. This approval also exempts the following counties in Ohio from the NO_X-related general conformity provisions, nonattainment area NSR for new sources and modifications that are major for NO_X, NO_X RACT, and a demonstration of compliance with the enhanced I/M performance standard for NO_X: Ashtabula, Butler, Clermont, Cuyahoga, Geauga, Hamilton, Lake, Lorain, Medina, Portage, Summit, and Warren. If, prior to redesignation to attainment, a violation of the ozone NAAQS is monitored in the Canton, Cincinnati, Cleveland, Columbus, Youngstown, and Steubenville areas, Preble County and Clinton County, the exemptions from the requirements of Section 182(f) of the Act in the applicable area(s) shall no longer apply.

(y) Approval—The 1990 base-year ozone emissions inventory requirement of Section 182(a)(1) of the Clean Air Act has been satisfied for Clinton County.

[45 FR 72142, Oct. 31, 1980]

EDITORIAL NOTE: For FEDERAL REGISTER citations affecting § 52.1885, see the List of CFR Sections Affected in the Finding Aids section of this volume.

§ 52.1886 [Reserved]

§ 52.1887 Control strategy: Carbon monoxide.

(a) Part D—Approval—The following portions of the Ohio plan are approved:

(1) The carbon monoxide portions of rules 01, 02, 03, 04 (except the portion disapproved in § 52.1877(c)), 05, 06, 07, 08, 09 (except the portions conditionally approved in § 52.1877(b)) and 10 of Chapter 3745–21 of the Ohio Administrative Code.

(2) The transportation control plans for the following urban areas: Akron (ozone component only), Canton, Cincinnati, Columbus, Dayton, Steubenville, Toledo (ozone component only), Cleveland.

(3) The carbon monoxide attainment and reasonable further progress demonstrations for the following urban areas: Cincinnati, Cleveland, Columbus and Youngstown.

(b) [Reserved]

(c) Part D—No Action—USEPA at this time takes no action on the carbon monoxide portions of the plan submitted for the urban areas of Akron and Toledo nor on the vehicle inspection and maintenance (I/M) program required for those nonattainment areas which have requested an extension to demonstrate carbon monoxide attainment.

(d) Disapproval—On June 9, 1982 (draft), and November 9, 1982 (final), the State of Ohio submitted a revised demonstration that attempts to show attainment by December 31, 1982, of the carbon monoxide (CO) National Ambient Air Quality Standards (NAAQS) for the Cleveland urban area. Supplemental information was submitted on March 8, 1983, March 16, 1983, December 5, 1983, and May 9, 1985. The June 9, 1982, and March 8, 1983, submittals also requested that the 5-year extension for meeting the NAAQS requested on July 29, 1979, and granted by USEPA on October 31, 1980, and June 18, 1981, be rescinded for this area. The attainment demonstration and rescission request are disapproved by USEPA because

they do not meet the requirements of § 51.10(b).

[45 FR 72143, Oct. 31, 1980, as amended at 45 FR 72147, Oct. 31, 1980; 49 FR 22815, June 1, 1984; 51 FR 10391, Mar. 26, 1986; 54 FR 615, Jan. 9, 1989; 54 FR 12621, Mar. 28, 1989; 55 FR 17752, Apr. 27, 1990]

§ 52.1888 Operating permits.

Emission limitations and related provisions which are established in Ohio operating permits as federally enforceable conditions in accordance with Rule 3745–35–07 shall be enforceable by USEPA and by any person under section 304 of the Clean Air Act. USEPA reserves the right to deem permit conditions not federally enforceable. Such a determination will be made according to appropriate procedures, and will be based upon the permit, permit approval procedures or permit requirements which do not conform with the operating permit program requirements or the requirements of USEPA's underlying regulations.

[60 FR 55202, Oct. 30, 1995]

§ 52.1889 Small business stationary source technical and environmental compliance assistance program.

The Ohio program, submitted as a requested revision to the Ohio State Implementation Plan on May 17, 1994, and May 4, 1995, satisfies the requirements of section 507 of the Clean Air Act.

[60 FR 42045, Aug. 15, 1995]

§ 52.1919 Identification of plan-conditional approval.

(a) The plan commitments listed below were submitted on the dates specified.

(1) [Reserved]

(2) On April 20, 1994, Ohio submitted Rule 3745–35–07, entitled ''Federally Enforceable Limitations on Potential to Emit,'' and requested authority to issue such limitations as conditions in State operating permits. On June 16, 1994, Ohio submitted a commitment to revise Rule 3745–35–07 to clarify that the rule provides for USEPA objection to permits after issuance. The revisions are approved provided Ohio fulfills this commitment by October 25, 1995.

(i) Incorporation by reference.

(A) Rule 3745–35–07, adopted April 4, 1994, effective April 20, 1994.

(3) Conditional Approval—On August 17, 1995, the Ohio Environmental Protection Agency submitted a revision to the State Implementation Plan. The submittal pertained to a plan for the implementation of the federal transportation conformity requirements at the State or local level in accordance with 40 CFR part 51, subpart T—Conformity to State or Federal Implementation Plans of Transportation Plans, Programs, and Projects Developed, Funded or Approved Under Title 23 U.S.C. or the Federal Transit Act. This conditional approval is based, in part, on the State's commitment, submitted in a letter on April 1, 1996, to submit revised transportation conformity rules to incorporate the two amendments to the federal transportation conformity regulations. The State of Ohio committed to revise its transportation conformity rules by November 14, 1996. If the State ultimately fails to meet its commitment to meet these requirements within one year of final conditional approval, then USEPA's action for the State's requested SIP revision will automatically convert to a final disapproval.

(i) *Incorporation by reference.* August 1, 1995, Ohio Administrative Code Chapter 3745–101, effective August 21, 1995.

(b) (Reserved)

[61 FR 24460, May 15, 1996, as amended at 61 FR 24705, May 16, 1996]

EFFECTIVE DATE NOTE: At 61 FR 24460, May 15, 1996, § 52.1919 was revised, effective July 15, 1996. At 61 FR 24705, May 16, 1996, § 52.1919 was further amended by adding paragraph (a)(3), effective July 15, 1996. For the convenience of the user the superseded text is set forth as follows:

§ 52.1919 Identification of plan-conditional approval.

(a)(1) On October 16, 1991, and March 17, 1993, the Ohio Environmental Protection Agency (OEPA) submitted revisions to the State Implementation Plan (SIP) for sulfur dioxide for sources in Hamilton County, Ohio. The revisions are approved provided that the State of Indiana Department of Environmental Management (IDEM) submits to USEPA, by September 23, 1995, a proposed SIP revision incorporating the limits identified in the September 1, 1992, letter from Joseph E. Seagram and Sons, Inc. to IDEM and the Ohio Environmental Protection Agency.

(i) Incorporation by reference.

(A) Ohio Administrative Code (OAC) Rule 3745–18–03 Attainment dates and compliance time schedules, Sections (A)(2)(c); (B)(7)(a); (B)(7)(b); (C)(8)(a); (C)(8)(b); (C)(9)(a); (C)(9)(b); (D)(1); (D)(2); dated October 11, 1991, and effective on October 31, 1991.

(B) Ohio Administrative Code (OAC) Rule 3745–18–04 Measurement methods and procedures, Sections (D)(7); (D)(8)(a) to D(8)(e); (E)(5); (E)(6)(a); (E)(6)(b); (F); (G)(1) to (G)(4); (I); dated October 11, 1991, and effective on October 31, 1991.

(C) Ohio Administrative Code (OAC) Rule 3745–18–37, Hamilton County sulfur dioxide emission limits, dated February 22, 1993, and effective on March 10, 1993.

(D) Director's Findings and Order for Cincinnati Gas And Electric Company, Miami Fort Station, dated February 22, 1993.

(b) [Reserved]

[59 FR 43290, Aug. 23, 1994, as amended at 59 FR 53589, Oct. 25, 1994; 60 FR 55202, Oct. 30, 1995]

Subpart LL—Oklahoma

§ 52.1920 Identification of plan.

(a) Title of plan: ''State of Oklahoma Air Quality Control Implementation Plan.''

(b) The plan was officially submitted on January 28, 1972.

(c) The plan revisions listed below were submitted on the dates specified.

(1) An opinion of the State Attorney General concerning the State's legal authority in emergency episode prevention and public disclosure was submitted February 15, 1972. (Non-regulatory)

(2) Letter from State Department of Health concerning emergency episode prevention, sampling site locations and governmental cooperation was submitted on February 25, 1972. (Non-regulatory)

(3) Letter of May 4, 1972, from the State Department of Health clarifies Regulations 4, 13, 14, and Title 63 of the State air quality regulations concerning emission data, emergency episodes, compliance schedules and new source review. (Non-regulatory)

(4) Revisions concerning Regulations 4 through 8, 13 and 15 through 18 were submitted by the Governor on July 14, 1972.

(5) Certification on October 4, 1972, of amendments to Regulation 14 of the State regulations was submitted by the Governor. (Non-regulatory)

(6) Corrections of the plan submitted previously and consolidated were submitted on October 16, 1972. (Non-regulatory)

(7) Sections 16.1, 16.3, and 16.5 of Regulation No. 16, ''Control of Emissions of Sulfur Compounds,'' the Control Strategy which relates to sulfur oxides control under the applicable sections of Regulation 16, and emission limitations on existing sources as adopted on December 1, 1974 and submitted by the Governor on March 4, 1975.

(8) Revision to Oklahoma Regulation 4.2 (public availability of emission data) was submitted by the Governor on October 7, 1975.

(9) Administrative revisions to Oklahoma SIP Chapter 1, Table 2, Oklahoma Ambient Air Quality Standards, Chapter 8, Source Surveillance and Enforcement System, section 8 A, B, and C relating to permits, and addition of Appendix Q, relating to Oklahoma Air Quality Standards, were submitted by the Oklahoma State Department of Health on May 16, 1975, with clarification submitted on June 17, 1977. (Non-regulatory).

(10) Consent agreements creditable as emission offsets were submitted by the Governor on March 28, 1977 as Addendum 1 to Chapter IV of the Oklahoma Air Quality Implementation Plan.

(11) Revisions of Oklahoma Regulation No. 15 for control of emissions of organic materials were adopted (effective date) December 31, 1974, and submitted by the Governor on June 16, 1975.

(12) Revision to Oklahoma Regulation No. 3, Defining Terms Used in Oklahoma Air Pollution Control Regulations, were submitted by the Governor on November 28, 1977. The revisions include amendments adopted by the State on June 2, 1974 and June 11, 1977. (See § 52.1926(a).)

(13) A general update of Chapter 7: Air Quality Surveillance, was submitted by the Governor on July 19, 1978. (Non-regulatory).

(14) Revisions to the plan for attainment of standards for ozone, carbon monoxide, and particulate matter (Part D requirements) were submitted by the Governor on April 2, 1979.

(15) A revised schedule including specific dates of the overall TSP program

was submitted by the State on March 28, 1980.

(16) Revisions to Regulation No. 17, Regulation No. 14 section 14.313, Regulation No. section 14.313(b), Regulation No. 14 section 14.313(c)(i), Regulation No. 15 section 15.50, Regulation No. 15 section 15.53, and Regulation No. 3 (Part D requirements) were submitted by the Governor on April 11, 1980.

(17) Revisions to the plan for intergovernmental consultation, interstate pollution abatement, public notification, and the State Board were submitted by the Governor on April 2, 1979; a letter of commitment for new source notification was submitted by the Acting Chief of the Oklahoma Air Quality Service on March 31, 1982; a Public Notification Workplan was submitted by the Chief of the Oklahoma Air Quality Service on January 14, 1980; the Oklahoma Code of Ethics for State Officials and Employees, with a clarification letter, was submitted by the Oklahoma Commissioner of Health on March 9, 1982; and a clarification letter was submitted by the Acting Chief of the Oklahoma Air Quality Service on February 23, 1982.

(18) The Oklahoma State Implementation Plan for lead was submitted to EPA on March 5, 1980, by the Governor of Oklahoma as adopted by the State Air Quality Council on November 13, 1979. Letters of clarification dated October 19 and December 9, 1981, also were submitted.

(19) Revisions to Regulation No. 15 (i.e., the addition of sections 15.57, 15.58, and 15.59) were adopted by the State Board of Health on April 30, 1980 and submitted by the Governor on June 10, 1980.

(20) Revisions to Regulation No. 15 (i.e., revisions to sections 15.524, 15.585, and 15.59, and the addition of Sections 15.60 and 15.61) were adopted by the State Board of Health on May 9, 1981 and submitted by the Governor on September 14, 1981.

(21) A variance to the State Regulations 7 and 8 for McAlester Army Ammunition Plant located in McAlester, Oklahoma was submitted by the State on September 21, 1979 and approved by the State Board of Health on September 8, 1979.

(22) On March 7, 1980, the Governor submitted final revisions to the ambient monitoring portion of the plan.

(23) [Reserved]

(24) A revision to the Air Pollution Control Regulation 2.1, as adopted by the Oklahoma Air Quality Council on January 19, 1982, was submitted by the Governor on April 12, 1982.

(25) Revision to Oklahoma Regulation No. 1.4 Air Resources Management-Permits Required (1.4.1–1.4.3) and Major Sources—Nonattainment areas (1.4.5) was submitted by the Governor on April 12, 1982. A letter of commitment and a letter of clarification for Regulation 1.4 was submitted by the State on April 30, 1982 and December 9, 1982, respectively.

(26) On April 2, 1979, the State of Oklahoma submitted an amendment to Regulation 1.3 *Defining Terms Used in Oklahoma Air Pollution Control Regulations* (i.e., Table II) and on April 12, 1982, and on May 19, 1983, the State submitted revisions to the State's Permit Regulation 1.4 including adding 1.4.4 [Major Sources—Prevention of Significant Deterioration (PSD) Requirements for Attainment Areas] to provide for PSD new source review. A Letter of Clarification of October 6, 1982, was also submitted.

(27) Revision to Oklahoma Regulation 3.8 (Control of Emission of Hazardous Air Contaminants) submitted by the Governor on February 8, 1983.

(28) Revision to Oklahoma Regulation 3.4—Control of Emission of Sulfur Compounds was submitted by the Governor on May 19, 1983, which changed subsections 3.4(c)(1)(A)(i)(a)(3) and 3.4(c)(1)(C)(i)(a). The revision was adopted by the Oklahoma State Board of Health on May 12, 1983. A letter of clarification on subsection 3.4(c)(1)(C)(i)(a) was submitted by the State on October 14, 1983.

(29) Revision of Oklahoma Regulation 1.4—Air Resources Management—Permits Required was submitted by the Governors on May 19, 1983. A letter of clarification on subsection 1.4.1(c)(3) was submitted by the State on September 23, 1983.

(30) Revision to Oklahoma Regulation No. 1.5—Reports Required: Excess Emissions During Startup, Shutdown

and Malfunction of Equipment was submitted by the Governor on February 8, 1983. Letters of clarification were submitted by the State on October 18, 1982 and May 24, 1983.

(31) Revision to Regulation 1.4 ''Air Resources Management—Permits Required'' and variance and extension for Mesa Petroleum Company submitted by the Governor on February 6, 1984. A letter of clarification on section 1.4.2(f) Cancellation of Authority to Construct or Modify was submitted by the State on February 17, 1984.

(32) [Reserved]

(33) Revision to Regulation 3.1 ''Pertaining to the Control of Smoke, Visible Emissions and Particulates'' submitted by the Governor on February 6, 1984. On May 16, 1984, the Oklahoma State Department of Health submitted a letter of clarification on Regulation 3.1.

(34) Oklahoma Air Pollution Control Regulation 1.4.2(b) ''Stack Height Limitation'' and amendments to OAPCR 1.4.2(e) ''Public Review'' as adopted on May 8, 1986, and submitted by the Governor on April 30, 1986, to meet the requirements of the Federal stack height regulations.

(i) Incorporation by Reference

(A) Oklahoma Air Pollution Control Regulation (OAPCR) 1.4.2(b) ''Stack Height Limitation'' as adopted on May 8, 1986, and amendments to OAPCR 1.4.2(b) section 1.4.2(b)(1)(G) as adopted on July 9, 1987, and effective August 10, 1987. In addition, amendments to OAPCR 1.4.2(b) section 1.4.2(b)(1)(C); and amendments to OAPCR 1.4.2(e) ''Public Review'' section 1.4.2(e)(1)(A) as adopted March 23, 1989, effective June 11, 1989, by the Oklahoma Board of Health.

(ii) Additional Material

(A) Commitment letter dated July 8, 1988, from the Director of the Permits and Enforcement Division of the Oklahoma Air Quality Service, Oklahoma State Department of Health.

(35) May 8, 1985, revisions to Oklahoma Air Pollution Control Regulation 3.4.(c)(1)(C) ''Gas Sweetening and Sulfur Recovery Plants'' were submitted by the Governor on March 31, 1986.

(i) Incorporation by reference.

(A) Amendments to Oklahoma Air Pollution Control Regulation 3.4(c)(1)(C) (Gas Sweetening and Sulfur Recovery Plants); adopted May 8, 1985, by the Oklahoma Air Quality Council.

(36) On March 9, 1990, the Governor submitted Oklahoma Air Pollution Control Regulation 3.7.5—4(h) ''Control of VOS Emissions from Aerospace Industries Coatings Operations.'' This regulation was adopted by the Oklahoma Air Quality Council on December 5, 1989, and by the Oklahoma Board of Health on February 8, 1990. The regulation became effective when it was signed by the Governor as an emergency rule on February 12, 1990. Also on March 9, 1990, the Governor of Oklahoma submitted four source specific alternate RA.T determination Orders issued by the Oklahoma Commissioner of Health for the Rockwell International, McDonnell Douglas-Tulsa. American Airlines and Nordam facilities in Tulsa County.

(i) Incorporation by reference. (A) Oklahoma Air Pollution Control Regulation 3.7.5—4(h) ''Control of VOS Emissions from Aerospace Industries Coatings Operations'' as adopted by the Oklahoma Air Quality Council on December 5, 1989, and the Oklahoma Board of Health on February 8, 1990, and approved by the Governor on February 12, 1990.

(B) Oklahoma Commissioner of Health Order issued and effective February 21, 1990, for Rockwell International, Tulsa approving an Alternate Reasonably Available Control Technology (ARACT).

(C) Oklahoma Commissioner of Health Order issued and effective February 21, 1990, for McDonnell Douglas–Tulsa approving an Alternate Reasonably Available Control Technology (ARACT).

(D) Oklahoma Commissioner of Health Order issued and effective February 21, 1990, for American Airlines approving an Alternate Reasonably Available Control Technology (ARACT).

(E) Oklahoma Commissioner of Health Order issued and effective February 21, 1990, for Nordam's Lansing Street facility approving an Alternate Reasonably Available Control Technology (ARACT).

(ii) Additional material. (A) *Rockwell International Tulsa. (1)* The document

prepared by Rockwell International titled ''Rockwell International NAA–Tulsa Alternate RACT Determination'' dated October 30, 1989.

(2) The document prepared by Rockwell titled ''Rockwell International NAA–Tulsa Alternate RACT Determination Supplemental Submittal'' dated November 22, 1989.

(B) *McDonnell Douglas. (1)* The document prepared by McDonnell Douglas–Tulsa titled ''Source Specific RACT Determination'' dated October 30, 1989.

(2) The document prepared by McDonnell Douglas–Tulsa titled ''ARACT/Follow-up Submission'' dated November 20, 1989.

(C) *American Airlines. (1)* The document prepared by American Airlines titled ''American Airlines Tulsa Alternate RACT'' dated October 30, 1989.

(2) The document prepared by American Airlines titled ''ARACT/Follow-up Submission'' dated November 22, 1989.

(D) *Nordam. (1)* The document prepared by Nordam titled ''Source Specific RACT Determination'' dated November 29, 1989.

(2) The document prepared by Nordam titled ''ARACT/Follow-up Submission'' dated January 10, 1990.

(37) On May 8, 1989, the Governor submitted Oklahoma Air Pollution Control Regulation 1.5 ''Excess Emission and Malfunction Reporting Requirements''. This regulation was adopted by the Oklahoma Board of Health on June 23, 1988, and approved by the Oklahoma Legislature on February 24, 1989. The regulation became effective on March 11, 1989.

(i) Incorporation by reference.

(A) Revisions to Oklahoma Air Pollution Control Regulation 1.5 ''Excess Emission and Malfunction Reporting Requirements'', OAPCR 1.5 title change, §1.5(a)(1), §1.5(b)(1)(B), §1.5(b)(1)(E), §1.5(c), title, §1.5(c)(1), §1.5(e)(1), and §1.5(e)(2), as adopted by the Oklahoma Board of Health on June 23, 1988, and approved by the Oklahoma Legislature on February 24, 1989.

(38) On August 22, 1989, the Governor submitted Oklahoma's Committal SIP for the Group II area of Lawton, Oklahoma. In addition, the submittal included the State's Group III SIP for the remainder of the State and amendments to the Oklahoma Air Pollution Control Regulations 1.1, 1.2, 1.4.4, and 1.4.5, and amendments to Chapter 6 ''Emergency Episode Control Plan for the State of Oklahoma''.

(i) Incorporation by reference.

(A) Amendments to Oklahoma Air Pollution Control Regulation (OAPCR) 1.1 ''Defining Terms Used in Oklahoma Air Pollution Control Regulations'' §1.1(b)(97), §1.1(b)(98), §1.1(b)(99) and §1.1(b)(145), as adopted October 11, 1989, by the Oklahoma State Board of Health and effective May 25, 1990. Amendments to OAPCR 1.1, §1.1(b)(127), and §1.1(b)(128), as adopted March 23, 1989, by the Oklahoma State Board of Health and effective June 11, 1989.

(B) Amendments to OAPCR 1.2 ''Oklahoma Air Quality Standards and Increments'' Table 1.2(1), as adopted January 28, 1988, by the Oklahoma State Board of Health and effective June 21, 1988.

(C) Amendments to OAPCR 1.4.4 ''Major Sources—Prevention of Significant Deterioration (PSD) Requirements for Attainment Areas'' §1.4.4(b)(22)(A), §1.4.4(d)(4), §1.4.4(d)(9), §1.4.4(d)(10), §1.4.4(d)(11), and §1.4.4(d)(12), as adopted March 23, 1989, by the Oklahoma State Board of Health and effective June 11, 1989.

(D) Amendments to OAPCR 1.4.5. ''Major Sources—Nonattainment Areas'' §1.4.5(b)(18), and §1.4.5(c)(1)(C), as adopted March 23, 1989, by the Oklahoma State Board of Health and effective June 11, 1989.

(39) On February 20, 1985, the Governor of Oklahoma, submitted a SIP revision designed to achieve the ozone standard in Tulsa County. Supplemental information was submitted on August 23, 1985, January 21, June 2, September 2, and December 22, 1986. The anti-tampering regulation was submitted to EPA by the Governor on October 8, 1985. On March 31, 1986, the Governor of Oklahoma submitted one new regulation. On May 8, 1989, the Governor of Oklahoma submitted one revised regulation. On March 9, 1990, the Governor of Oklahoma submitted four new regulations and several miscellaneous changes to the existing SIP approved regulations in Tulsa County. EPA is approving one regulation (OAPCR 3.7.5–4(f) ''Petroleum (Solvent) Dry Cleaning'') under part A, section

110 of the Clean Air Act. This regulation does not represent RACT under part D, section 172 of the Clean Air Act.

(i) Incorporation by reference.

(A) Oklahoma Air Pollution Control Regulation (OAPCR) 3.7 ''Control of Emissions of Organic Materials'' §3.7.5–4(f) as adopted by the Oklahoma State Board of Health on February 7, 1985, and effective July 1, 1986.

(B) Oklahoma Air Pollution Control Regulation (OAPCR) 3.7 ''Control of Emissions of Organic Materials'' §3.7.5–4(f), §3.7.5–4(f)(1)(A), §3.7.5–4(f)(1)(B)(vi), §3.7.5–4(f)(1)(B)(vii), §3.7.5–4(f)(2)(B), §3.7.5–4(f)(3)(A)(iv), §3.7.5–4(f)(3)(B), §3.7.5–4(f)(4), §3.7.5–4(f)(4)(A), §3.7.5–4(f)(4)(A)(i), §3.7.5–4(f)(4)(A)(ii), §3.7.5–4(f)(4)(A)(iii), §3.7.5–4(f)(5), and §3.7.5–4(f)(5)(A) as amended by the Oklahoma State Board of Health on January 29, 1987, and effective January 29, 1987.

(C) Amendments to Oklahoma Air Pollution Control Regulation (OAPCR) 3.7 ''Control of Emissions of Organic Materials'' §3.7.5–1(a), §3.7.5–2(a)(2)(A), §3.7.5–4(b), §3.7.5–4(e)(2)(A), §3.7.5–4(f)(1)(A), §3.7.5–4(f)(2)(A), §3.7.5–4(f)(2)(B), and §3.7.5–4(i) as amended by the Oklahoma State Board of Health on March 23, 1989, and effective June 11, 1990.

(D) Amendments to Oklahoma Air Pollution Control Regulation (OAPCR) 3.7 ''Control of Emissions of Organic Materials'' §3.7.1(b)(10), §3.7.1(b)(11), §3.7.1(b)(12), §3.7.1(b)(13), §3.7.1(b)(14), §3.7.5–2(a)(1)(B)(i), §3.7.5–2(a)(2), §3.7.5–2(a)(3)(A)(iv), §3.7.5–2(a)(3)(A)(v), §3.7.5–2(a)(4)(A)(ii), §3.7.5–2(a)(5)(A), §3.7.5–2(a)(6)(A)(i), §3.7.5–2(a)(6)(A)(iii), §3.7.5–2(a)(6)(B), §3.7.5–2(a)(8)(A)(i), §3.7.5–2(a)(9), §3.7.5–2(b)(1), §3.7.5–2(b)(2), §3.7.5–2(b)(2)(A)(i), §3.7.5–2(c)(1), §3.7.5–2(c)(1)(A), §3.7.5–2(c)(1)(B), §3.7.5–2(c)(2), §3.7.5–2(c)(3), §3.7.5–2(c)(4), §3.7.5–3(a)(2)(B), §3.7.5–3(a)(3)(B)(i), §3.7.5–4(b)(1)(A)(i), §3.7.5–4(b)(1)(A)(ii), §3.7.5–4(b)(1)(A)(iii), §3.7.5–4(b)(3)(F), §3.7.5–4(c)(1)(A), §3.7.5–4(c)(1)(A)(ii), §3.7.5–4(c)(1)(D), §3.7.5–4(c)(1)(E), §3.7.5–4(c)(2)(A)(i), §3.7.5–4(c)(2)(A)(ii), §3.7.5–4(c)(2)(A)(iii), §3.7.5–4(c)(2)(A)(iii)(a), §3.7.5–4(c)(2)(A)(iii)(d), §3.7.5–4(c)(2)(C), §3.7.5–4(c)(3), §3.7.5–4(c)(3)(A), §3.7.5–4(c)(3)(A)(i), §3.7.5–4(c)(3) (B) through (C) added, §3.7.5–4(c)(4), §3.7.(d)(5)(A), §3.7.5–4(f)(1)(A), new §3.7.5–4(g), §3.7.5–4(i)(1)(B), §3.7.5–4(i)(1)(B)(iii), §3.7.5–4(i)(1)(B)(iv), §3.7.5–4(i)(1)(D), §3.7.5–4(i)(1)(E), and §3.7.5–4(i)(2)(G), as amended/adopted by the Oklahoma State Board of Health on October 11, 1989, and effective May 25, 1990.

(E) Amendments to Oklahoma Air Pollution Control Regulation (OAPCR) 3.7 ''Control of Emissions of Organic Materials'' §3.7.5–2(a)(1)(A), §3.7.5–2(a)(1)(B), §3.7.5–2(a)(1)(B)(i), §3.7.5–2(a)(1)(B)(vii), §3.7.5–2(a)(6)(A)(i), §3.7.5–2(c)(3)(B), §3.7.5–2(c)(4), §3.7.5–4(g)(6), §3.7.5–4(g)(11), §3.7.5–4(i)(1)(D), §3.7.5–4(i)(1)(E), §3.7.5–4(i)(1)(F), §3.7.5–4(i)(1)(G), and new §3.7.5–4(j) as amended/ adopted by the Oklahoma State Board of Health on February 8, 1990, and effective May 25, 1990.

(F) Oklahoma Official Motor Vehicle Inspection Rules and Regulations Manual adopted December 5, 1985, and effective January 1, 1986.

(G) 47 O.S. SUPP. 856.1 et seq. adopted May 24, 1984, and effective May 24, 1984.

(H) OP. Oklahoma Attorney General number 84–174 (December 12, 1984).

(I) February 20, 1985, plan commitments for Tulsa County, including transportation control measures, page 8, and Reasonable Further Progress schedules and reporting commitments, pages 10 and 11, dated June 3, 1986.

(J) Title 37, chapter 4, section 167, Tulsa City Ordinance number 16466 as approved and effective October 15, 1985, by the City of Tulsa.

(K) An October 17, 1989, commitment letter, to develop and incorporate test methods into OAPCR 3.7 for determining the capture efficiency of control devices associated with coating operations.

(L) A January 16, 1990, commitment letter stating that the DPS will annually conduct unannounced visits to 10 percent of the Tulsa inspection stations.

(M) A September 28, 1990, Memorandum of Understanding.

(N) An October 12, 1990, letter to report semiannually to EPA, information relating to the effectiveness and enforcement of the I/M program.

(ii) Additional material.

(A) February 20, 1985, narrative plan revision designed to achieve the ozone standard in Tulsa County, including

control strategy, modeling analysis, transportation control plan and measures, I/M program description, and negative declarations.

(B) A written interpretation by the DPS dated June 26, 1987, of the term ''proper replacement'' in §856.1(C) of the Oklahoma statutes to mean ''original equipment manufacturer (OEM) or equivalent''.

(40) On October 17, 1985, the Governor of Oklahoma submitted a SIP revision designed to achieve the carbon monoxide standard in Oklahoma County. Supplemental information was submitted on January 29, 1986, November 7, 1986, October 12, 1990, and October 15, 1990. The anti-tampering regulation was submitted to EPA by the Governor on October 8, 1985.

(i) Incorporation by reference.

(A) Oklahoma Official Motor Vehicle Inspection Rules and Regulations Manual adopted December 5, 1985, and effective January 1, 1986.

(B) 47 O.S. SUPP. Section 856.1 et seq. adopted May 24, 1984, and effective May 24, 1984.

(C) OP. Oklahoma Attorney General number 84–174 (December 12, 1984).

(D) October 17, 1985, plan reporting commitments for Oklahoma County Reasonable Further Progress schedule, page 6.

(E) The City of Oklahoma City Ordinance No. 12,575, as passed by the Council of the City of Oklahoma City on March 31, 1970, and approved by the Mayor on March 31, 1970.

(ii) Additional material.

(A) A February 7, 1991, commitment letter stating that the DPS will annually conduct unannounced visits at 10 percent of the Oklahoma County inspection stations.

(B) An October 12, 1990, letter committing to report semiannually to EPA, information relating to the effectiveness and enforcement of the I/M program.

(41) On November 14, 1990, the Governor submitted revisions to Oklahoma Air Pollution Control Regulation (Regulation) 1.1 ''Defining Terms Used in Oklahoma Air Pollution Control Regulations'', Regulation 1.2 ''Oklahoma Air Quality Standards and Increments'', and Regulation 1.4 ''Permits''. These regulations were adopted by the Oklahoma Air Quality Council on April 3, 1990, and by the Oklahoma Board of Health on April 12, 1990. These regulations became effective when they were signed by the Governor as emergency rules on June 4, 1990.

(i) Incorporation by reference.

(A) Revisions to Oklahoma Air Pollution Control Regulation 1.1, Regulation 1.2, and Regulation 1.4, as adopted by the Oklahoma Air Quality Council on April 3, 1990, by the Oklahoma Board of Health on April 12, 1990, and became effective on June 4, 1990: Oklahoma Air Pollution Control Regulations 1.1(b)(13), 1.1(b)(14), 1.1(b)(15), 1.1(b)(16), 1.1(b)(82)(D), 1.2—Table 1.2(2), 1.4.1(a)(1), 1.4.1(b)(3)(B), 1.4.1(b)(3)(C), 1.4.2(a)(2)(ii), 1.4.2(c), 1.4.2(h)(2), 1.4.4(b)(3)(D), 1.4.4(b)(13), 1.4.4(b)(14), 1.4.4(b)(15) and 1.4.4(d)(12), 1.4.4(d)(13)(C).

(ii) Additional material.

(A) April 23, 1991, letter from Mr. John Drake, Chief, Air Quality Service, Oklahoma State Department of Health, to Mr. A. Stanley Meiburg, Director, Air, Pesticides & Toxics Division, EPA, Region 6.

(42) On November 7, 1989, the Governor of Oklahoma submitted a revision to the SIP consisting of a construction permit, number 88–116–C, for a cogeneration unit and an operating permit, number 88–117–O, for a sulfur recovery unit. The revision involves a sulfur dioxide emissions trade for the Conoco, Incorporated, Ponca City Refinery.

(i) *Incorporation by reference.* (A) Permit number 88–116–C, as adopted by the Oklahoma State Department of Health (OSDH) on May 23, 1989.

(B) Permit number 88–117–O, as adopted by the Oklahoma State Department of Health (OSDH) on June 22, 1990.

(ii) *Additional material.* (A) The document issued by Conoco Ponca City Refinery, titled, ''Level II Modeling Analysis in Support of Alternate Emissions Reduction Permit for Sulfur Recovery Plant'' dated April 1990.

(B) The document issued by Conoco Ponca City Refinery, titled, ''Level III Remodeling for an SO_2 Bubble Trade'' dated June 3, 1991 (revised July 8, 1991).

(43) A revision to the Oklahoma SIP to include revisions to Oklahoma Title

310, Chapter 200, Subchapter 31, entitled Control of Emissions of Sulfur Compounds.

(i) Incorporation by reference.

(A) Revisions to Oklahoma Title 310, Chapter 200, Subchapter 31, entitled Control of Emissions of Sulfur Compounds, Part 1. ''General Provisions,'' Section 310:200–31–2, ''Definitions;'' Section 310:200–31–3, ''Performance testing;'' Part 3. ''Existing Equipment Standards,'' Section 310:200–31–12, ''Sulfur oxides;'' Section 310:200–31–13, ''Sulfuric acid mist;'' Section 310:200–31–14, ''Hydrogen sulfide;'' Section 310:200–31–15, ''Total reduced sulfur;'' Part 5. ''New Equipment Standards,'' Section 310:200–31–25, ''Sulfur oxides;'' and Section 310:200–31–26, ''Hydrogen sulfide,'' as adopted by the Oklahoma State Board of Health on March 24, 1993, and effective June 1, 1993.

(44) [Reserved]

(45) The State is required to implement a Small Business Stationary Source Technical and Environmental Compliance Assistance Program as specified in the plan revision submitted by the Governor on November 19, 1992. This plan submittal, as adopted by the Oklahoma Air Quality Council on October 13, 1992, was developed in accordance with section 507 of the Clean Air Act.

(i) Incorporation by reference.

(A) Enrolled House Bill No. 2251 (Oklahoma Clean Air Act of 1992), signed into law by the Governor on May 15, 1992, and effective upon signature. Included in this Act are provisions establishing a small business stationary source compliance assistance program; creating the State Ombudsman Office for small business; establishing Ombudsman duties; creating a Compliance Advisory Panel; establishing membership of Panel; and establishing Panel duties.

(B) Enrolled House Bill No. 2227 (Oklahoma Environmental Quality Act), signed into law by the Governor on June 12, 1992, and effective upon signature, authorizing the creation of the Oklahoma Department of Environmental Quality (ODEQ).

(ii) Additional material.

(A) Revision entitled, ''The Oklahoma Small Business Stationary Source Assistance Program, Chapter 11 of the State Implementation Plan, October 13, 1992.''

(46) A revision to the Oklahoma SIP to include revisions to Oklahoma Department of Public Safety regulation Title 595, Chapter 20, Subchapter 3—Emission and Mechanical Inspection of Vehicles, Subchapter 7—Inspection Stickers and Monthly Tab Inserts for Windshield and Trailer/Motorcycle, Subchapter 9—Class AE Inspection Station, Vehicle Emission Anti-tampering Inspection and Subchapter 11—Annual Motor Vehicle Inspection and Emission Anti-Tampering Inspection Records and Reports, adopted by the State on April 6, 1994, effective May 26, 1994 and submitted by the Governor on May 16, 1994.

(i) Incorporation by reference.

(A) Revisions to Oklahoma Department of Public Safety regulation Title 595, Chapter 20: 3–1(2); 3–3; 3–5; 3–6; 3–12; 3–25; 3–26; 3–27; 3–41(o); 3–42; 3–46(a) and (b); 3–61(a),(b),(e) and (f); 3–63(b) and (g); 7–1(c) and (f); 7–2(a); 7–3; 7–4(a); 7–5(a); 7–6(a); 7–7(a); 9–1(a); 9–3(l) and (m); 9–7; 9–10(a),(b) and (c); 9–11(a); 9–12(a); 9–13(a); 9–14(a) and (b); 9–15(a); 11–1; 11–2(a); 11–3(a); 11–4 effective May 26, 1994.

(ii) Additional material.

(A) State SIP revision entitled, ''Oklahoma Vehicle Anti-Tampering Program SIP Revision,'' which includes a completeness determination, SIP narrative, hearing records and other documentation relevant to the development of this SIP.

(47) A revision to the Oklahoma SIP to include revisions to Oklahoma Air Pollution Control Regulation 3.7—Control of Emissions of Organic Materials, adopted by the State on October 2, 1990, effective May 11, 1991 and submitted by the Governor on May 16, 1994.

(i) Incorporation by reference.

(A) Revisions to Oklahoma Air Pollution Control Regulations 3.7, Sections 3.7.5–4(g)(7)(A)(i)(b), 3.7.5–4(g)(9)(A), 3.7.5–4(i)(3)(B)(1), and 3.7.5–4(i)(3)(B)(3) effective May 11, 1991.

(ii) Additional material.

(A) State SIP revision entitled, ''Oklahoma Alternative Standards SIP Revision,'' which includes a completeness determination, SIP narrative,

hearing records and other documentation relevant to the development of this SIP.

[37 FR 10887, May 31, 1972]

EDITORIAL NOTE: For FEDERAL REGISTER citations affecting § 52.1920, see the List of CFR Sections Affected in the Finding Aids section of this volume.

§ 52.1921 Classification of regions.

The Oklahoma plan was evaluated on the basis of the following classifications:

Air quality control region	Pollutant				
	Particulate matter	Sulfur oxides	Nitrogen dioxide	Carbon monoxide	Ozone
Central Oklahoma Intrastate	I	III	III	III	I
Northeastern Oklahoma Intrastate	I	III	III	III	I
Southeastern Oklahoma Intrastate	III	III	III	III	III
North Central Oklahoma Intrastate	III	III	III	III	III
Southwestern Oklahoma Intrastate	III	III	III	III	III
Northwestern Oklahoma Intrastate	III	III	III	III	III
Metropolitan Fort Smith Interstate	II	III	III	III	III
Shreveport-Texarkana-Tyler Interstate	II	III	III	III	III

[37 FR 10887, May 31, 1972, as amended at 45 FR 9741, Feb. 13, 1980]

§ 52.1922 Approval status.

With the exceptions set forth in this subpart, the Administrator approves Oklahoma's plan for the attainment and maintenance of the national standards under section 110 of the Clean Air Act. Furthermore, the Administrator finds that the plan satisfies all requirements of Part D, Title 1, of the Clean Air Act as amended in 1977, except as noted below.

[45 FR 9741, Feb. 13, 1980, as amended at 61 FR 16062, Apr. 11, 1996]

§§ 52.1923—52.1928 [Reserved]

§ 52.1929 Significant deterioration of air quality.

(a) Regulation for preventing significant deterioration of air quality. The Oklahoma plan, as submitted, does not apply to certain sources in the State. Therefore the provisions of § 52.21 (b) through (w) are hereby incorporated by reference, madepart of the Oklahoma State Implementation Plan and are applicable to the following major stationary sources or major modifications:

(i) Sources permitted by EPA prior to approval of the Oklahoma PSD program for which EPA retains enforcement authority.

(ii) Sources proposing to locate on lands over which Oklahoma does not have jurisdiction under the Clean Air Act to issue PSD permits.

(b) The plan revisions submitted by the Governor of Oklahoma on August 22, 1989, as adopted on March 23, 1989, by the Oklahoma State Board of Health and effective June 11, 1989, amendments to OAPCR 1.4.4 ''Major Sources—Prevention of Significant Deterioration (PSD) Requirements for Attainment Areas'' is approved as meeting the requirements of Part C of the Clean Air Act for preventing significant deterioration of air quality.

[56 FR 5656, Feb. 12, 1991]

§ 52.1930 [Reserved]

§ 52.1931 Petroleum storage tank controls.

(a) Notwithstanding any provisions to the contrary in the Oklahoma implementation plan, the petroleum storage tanks listed in paragraphs (b) through (e) of this section shall be subject to the requirements of section 15.211 of the Oklahoma Air Pollution Control Regulations and to the monitoring, inspection, reporting, and other procedural requirements of the Oklahoma implementation plan and the Clean Air Act. The owner or operator of each affected facility shall secure compliance with section 15.211 in accordance with the schedule set forth below.

(b) Tanks 121 and 122 for crude oil storage at the Sun Oil Company refinery at Duncan, Oklahoma, shall be in

compliance with section 15.211 no later than August 1, 1979.

(c) Tanks 118 and 119 for gasoline storage at the Apco Oil Corporation refinery at Cyril, Oklahoma, shall be in compliance with section 15.211 no later than February 1, 1979.

(d) Tank 286 for crude oil storage at the Continental Pipe Line Company property in Oklahoma County, Oklahoma (section 32–12N–2W) shall be in compliance with section 15.211 no later than February 1, 1979.

(e) The three 80,000 barrel capacity crude oil storage tanks at the Champlin Petroleum Company, Noble Station, 13th and Bryan Streets, Oklahoma City, Oklahoma, shall be in compliance with section 15.211 no later than September 1, 1979.

(f) Action on the part of Sun Oil Company, Apco Oil Corporation, Continental Pipe Line Company and Champlin Petroleum Company of controlling hydrocarbon emissions creditable as offsets for General Motors Corporation, Oklahoma City, Oklahoma, in no way relieves these companies from meeting all requirements under the Oklahoma Air Quality Implementation Plan or under the Federal Clean Air Act as amended.

[42 FR 63782, Dec. 20, 1977]

§ 52.1932 [Reserved]

§ 52.1933 Visibility protection.

(a) The requirements of section 169A of the Clean Air Act are not met because the plan does not include approvable procedures meeting the requirements of 40 CFR 51.305 and 51.307 for protection of visibility in mandatory Class I Federal areas.

(b) Regulations for visibility monitoring and new sources review. The provisions of §§ 52.26, 52.27, and 52.28 are hereby incorporated and made part of the applicable plan for the State of Oklahoma.

(c) *Long-term strategy*. The provisions of § 52.29 are hereby incorporated and made part of the applicable plan for the State of Oklahoma.

[51 FR 22938, June 24, 1986, as amended at 52 FR 45137, Nov. 24, 1987]

§ 52.1934 Prevention of air pollution emergency episodes.

(a) The plan originally submitted by the Governor of Oklahoma on January 28, 1972, as Chapter six, was revised for particulate matter and submitted for parallel processing by the Episode Control Plan for the State of Oklahoma'' § 2.2 and § 3.2 table II as adopted September 6, 1988, by the Oklahoma Air Quality Council are approved as meeting the requirements of section 110 of the Clean Air Act and 40 CFR part 51 subpart H.

[56 FR 5656, Feb. 12, 1991]

§ 52.1935 Small business assistance program.

The Governor of Oklahoma submitted on November 19, 1992, a plan revision to develop and implement a Small Business Stationary Source Technical and Environmental Compliance Assistance Program to meet the requirements of section 507 of the Clean Air Act by November 15, 1994. The plan commits to provide technical and compliance assistance to small businesses, hire an Ombudsman to serve as an independent advocate for small businesses, and establish a Compliance Advisory Panel to advise the program and report to EPA on the program's effectiveness.

[59 FR 32370, June 23, 1994]

Subpart MM—Oregon

§ 52.1970 Identification of plan.

(a) Title of plan: ''State of Oregon Clean Air Act Implementation Plan.''

(b) The plan was officially submitted on January 25, 1972.

(c) The plan revisions listed below were submitted on the dates specified.

(1) Amendments to the implementation plan including ORS chapters 449, 192, and 340 submitted on May 3, 1972, by the Governor.

(2) Transportation control strategy for oxidants and carbon monoxide in the Oregon portion of the Portland Interstate Region submitted on October 26, 1972, by the Governor.

(3) Compliance schedules submitted on February 9, 1973, by the Department of Environmental Quality.

(4) Revision to the transportation control plan submitted on April 13, 1973, by the Governor.

(5) Compliance schedules submitted on May 30, 1973, by the Department of Environmental Quality.

(6) Compliance schedules submitted on June 8, 1973, by the Department of Environmental Quality.

(7) Compliance schedules submitted on June 22, 1973, by the Department of Environmental Quality.

(8) Compliance schedules submitted on June 25, 1973, by the Department of Environmental Quality.

(9) Compliance schedules submitted on July 31, 1973, by the Department of Environmental Quality.

(10) Compliance schedules submitted on August 3, 1973, by the Department of Environmental Quality.

(11) Request for an extension to May 31, 1976, of the attainment date for carbon monoxide and photochemical oxidants and miscellaneous additions (Nonregulatory) to the transportation control plan submitted on September 21, 1973, by the Governor.

(12) Miscellaneous additions (Nonregulatory) to the transportation control plan submitted on August 20, 1973, by the Department of Environmental Quality.

(13) Plan for maintenance of the national standards submitted on August 27, 1973, by the Department of Environmental Quality.

(14) Revision to Oregon Administrative Rules (OAR) Chapter 340, sections 25–105 through 25–130,—Hot Mix Asphalt Plans and sections 25–155 through 25–195 Kraft Pulp Mills submitted on February 8, 1973, by the Department of Environmental Quality.

(15) Change to regulations for the Lane Regional Air Pollution Authority submitted on February 13, 1973, by the Department of Environmental Quality.

(16) Special air pollution control rules for Clackamas, Columbia, Multnomah and Washington Counties and certification of the dissolution of regulations for the Columbia-Willamette Air Pollution Authority submitted on January 17, 1974, by the Department of Environmental Quality.

(17) Revision to Oregon Administrative Rules (OAR) Chapter 340, sections 12–030 through 12–055 Civil Penalties submitted on February 19, 1975, by the Department of Environmental Quality.

(18) Oregon Revised Statute 468.095 for public availability of emission data submitted on August 1, 1975, by the Department of Environmental Quality.

(19) Indirect Source Regulation (OAR, Chapter 340 sections 20–100 through 20–135) submitted on July 24, 1975, by the Department of Environmental Quality.

(20) Indirect Source Regulation (Title 20—Indirect Sources), of the Lane Regional Air Pollution Authority Rules and Regulations, submitted November 18, 1975 by the Department of Environmental Quality.

(21) Air Contaminant Discharge Permits (Oregon Administrative Rules 340–20–140 through 340–20–185) submitted February 17, 1976.

(22) Lane Regional Air Pollution Authority Regulation, Title 22—Permits, submitted June 7, 1976.

(23) Oregon Revised Statutes sections 468.450 through 468.485 submitted on August 1, 1975, by the Department of Environmental Quality.

(24) Oregon Administrative Rules (OAR) Chapter 340, sections 26–005 through 26–025, submitted on February 17, 1976, by the Department of Environmental Quality.

(25) Request for an extension to May 31, 1978, of the attainment date for particulate matter national secondary ambient air quality standards in the Eugene/Springfield Air Quality Maintenance Area.

(26) Revision to the field burning regulations submitted on June 28, 1979; September 13, 1979, October 10, 1979; and March 11, 1980, by the Department of Environmental Quality.

(27) On June 20 and 29, 1979, the Governor submitted: (i) Carbon monoxide (CO) and ozone (O_3) attainment plans for the Oregon portion of the Portland-Vancouver AQMA, Salem, and Medford-Ashland AQMA, and (ii) a carbon monoxide (CO) attainment plan for the Eugene-Springfield AQMA.

(28) On June 20, 1979, the Governor requested an extension beyond 1982 for the attainment of carbon monoxide (CO) in Portland, Eugene-Springfield and Medford.

(29) On June 29, 1979, the Governor requested an extension beyond 1982 for

the attainment of ozone (O_3) in Portland.

(30) On February 14, 1980, the State Department of Environmental Quality submitted its official response to EPA's proposed SIP actions which were published in the FEDERAL REGISTER on January 21, 1980 (45 FR 3929).

(31) On May 6, 1980, the State Department of Environmental Quality submitted recodified portions of Oregon Revised Statutes (ORS) 449 which authorize Oregon's automobile inspection/maintenance program. This submittal, requested by EPA, included chapters ORS 468.360 through 468.420, 481.190, 481.200, 483.800, 483.820, and 483.825.

(32) Revisions to the program for controlling the open burning of grass seed fields submitted on April 22, 1980, by the Department of Environmental Quality.

(33) Oregon Administrative Rules (OAR) Chapter 340, sections 24–300 through 24–350 for the vehicle inspection and maintenance program, submitted on July 26, 1980, by the Oregon Department of Environmental Quality.

(34) On December 27, 1979, the State of Oregon Department of Environmental Quality submitted a plan revision to meet the requirements of Air Quality Monitoring 40 CFR part 58, subpart C § 58.20.

(35) On December 31, 1980, the State Department of Environmental Quality submitted an Oregon Air Containment Discharge Permit No. 36–6041 Addendum No. 1 issued to Spaulding Pulp and Paper Company on December 11, 1980; Oregon Air Discharge Containment Discharge Permit No. 26–3025, issued to Industrial Laundry Dry Cleaners, Inc., on December 1980 and Oregon Environmental Quality Commission Stipulation and Consent Final Order concerning Vanply, Inc., dated December 30, 1980.

(36) On September 8, October 16, December 5, December 19, 1980, May 29, 1981 and September 9, 1981, DEQ submitted revisions to the SIP designed to satisfy the conditions of approval published by EPA on June 24, 1980 (45 FR 42265).

(37) Specific air pollution control rules for the Medford AQMA (OAR 340–30–005 through 340–30–070) submitted by the Department of Environmental Quality on May 26, 1978, and revisions submitted by the Department of Environmental Quality on February 14, 1980 (OAR–340–010 and 340–30–020), October 29, 1980 (OAR 340–30–016, 340–30–035 and 340–30–045), May 22, 1981 (OAR 340–30–010, 340–30–030 and 340–30–045) and September 9, 1981 (OAR 340–30–060).

(38) Revisions to the Lane Regional Air Pollution Authority rules submitted by the Department of Environmental Quality on March 14, 1977 (Title 22, Sections 010 and 020 and Table A), June 29, 1979 (Title 11, Section 015; Title 12, Sections 005 and 010; Title 13; Title 20, Sections 110, 115, 120, 125, 129 and 130; Title 21, Sections 010 and 030; Title 32, Sections 005 and 010; Title 33, Sections 005, 010, 015 and 065; Title 36; Title 42; Title 43; Title 44; and Title 45), November 6, 1979 (Title 22,Section 020 and Table A), and January 30, 1980 (Title 36).

(39) Conditions 5 and 6 of the Air Contaminant Discharge Permit for the Weyerhaeuser Company plant in Bly, Oregon (Permit Number: 18–0037) submitted by the Department of Environmental Quality on March 24, 1981.

(40) Condition 4, 5, and 6 of the Air Contaminant Discharge Permit for the Weyerhaeuser Company plant in North Bend, Oregon (Permit Number: 06–0007) submitted by the Department of Environmental Quality on March 27, 1981.

(41) Revisions to the agricultural open field burning rules (OAR 340–26–005 through 340–26–030) submitted by the Department of Environmental Quality on April 23, 1981, and amended ''Smoke Management Program Operational Guidelines'' submitted by the Department of Environmental Quality on July 8, 1981.

(42) Revisions to the rules for sulfite pulp mills (OAR 340–25–350 through 340–25–390) submitted by the Department of Environmental Quality on June 2, 1980.

(43) Revisions to the Air Quality Schedule of Civil Penalties (OAR 340–12–050) submitted by the Department of Environmental Quality on February 14, 1980.

(44) Revision to the ambient air quality standard for ozone (OAR 340–31–030) submitted by the Department of Environmental Quality on June 20, 1979.

(45) On March 24, 1981, the State Department of Environmental Quality submitted control strategies for the Portland secondary total suspended particulates nonattainment area.

(46) On March 23, 1981, the State Department of Environmental Quality submitted control strategies for the Eugene-Springfield secondary total suspended particulates nonattainment area.

(47) On October 16, 1980, the State Department of Environmental Quality submitted revisions to the control strategies for the Salem ozone nonattainment area.

(48) On August 17, 1981, the State Department of Environmental Quality submitted amendments to the operating rules for the Portland motor vehicle inspection program (OAR 340–24–300 through 350).

(49) On March 11, 1982, the State of Oregon Department of Environmental Quality submitted three revisions to the Lane Regional Air Pollution Authority rules. They are:

(i) Title 11 Definitions (Section 015.013, Air Conveying Systems),

(ii) Title 22 Permits (Section 020, Fees),

(iii) Title 32 Emission Standards (Section 800, Air Conveying System).

(50) On March 11, 1982, the State of Oregon Department of Environmental Quality submitted a revision to their State ambient air quality standard for ozone (from 0.08 ppm to 0.12 ppm.

(51) Amendments to the Air Contaminant Discharge Permit Rules submitted by the State Department of Environmental Quality on February 15, 1977 (OAR 340–20–140 through 185), July 24, 1979 (OAR 340–20–155 Table A, 165, 175 and 180) and May 22, 1981 (OAR 340–20–155 Table A).

(52) Prevention of Significant Deterioration Rules (OAR 340–31–100, 105 subsections (12), (15) and (16), 110, 115, 120 and 130) submitted by the State Department of Environmental Quality on June 20, 1979, and September 9, 1981.

(53) New Source Review Rules (OAR 340–20–220 to 275, except Section 225 subsections 7 and 11), except to the extent that they apply to marine vessel emissions, submitted by the State Department of Environmental Quality on September 9, 1981, and deletion of Special Permit Requirements for Sources Locating In or Near Nonattainment Areas (OAR 340–20–190 through 195).

(54) Plant Site Emission Limit Rules (OAR 340–20–300 through 320) submitted by the State Department of Environmental Quality on September 9, 1981, and deletion of the Plant Site Emission Limit Rules (OAR 340–20–196 and 197).

(55) On July 20, 1982, the State of Oregon Department of Environmental Quality submitted: (i) Carbon monoxide (CO) and ozone (O_3) attainment plans for Portland which build upon those plans submitted in June 1979 and (ii) a request to extend the Portland CO and O_3 attainment dates to December 31, 1985, and December 31, 1987, respectively.

(56) On August 9, 1982, the State of Oregon Department of Environmental Quality submitted a revision to remove the Mid-Willamette Valley Air Pollution Authority Regulations from the Oregon state implementation plan.

(57) Amendments to the rules for primary aluminum plants submitted by the Oregon State Department of Environmental Quality on February 21, 1974 (OAR 340–25–255 to 290), February 14, 1980 (OAR 340–25–265(4)(b) and 265(5)) and August 9, 1982 (OAR 340–25–255 to 285).

(58) Amendments to the rules for equipment burning salt laden wood waste from logs stored in salt water (OAR 340–21–020) and removal of Conditions 4, 5, and 6 of the Air Contaminant Discharge Permit for the Weyerhaeuser Company plant in North Bend, Oregon (Permit Number: 06–0007) submitted by the Oregon State Department of Environmental Quality on October 18, 1982.

(59) On August 16, 1982, the State of Oregon Department of Environmental Quality submitted a revision to OAR 340–24–300 to 24–350 (Vehicle Inspection Program Rules).

(60) On January 24, 1983, the State of Oregon Department of Environmental Quality submitted a revision to add a lead strategy to the Oregon Implementation Plan and revise the State lead ambient air quality standard to agree with the Federal standard.

(61) On December 13, 1982, the State of Oregon Department of Environmental Quality submitted two revisions to the Lane Regional Air Pollution Authority rules. The revisions are: (1) Title 32, Emission Standards (Section 800, Air Conveying Systems)—revision to compliance date and (2) Title 33, Prohibited Practices and Control of Special Classes (Section 070, Kraft Pulp Mills)—new rules.

(62) Title 22 ''PERMITS'' of the Lane Regional Air Pollution Authority Rules, except to the extent that they apply to marine vessel emissions and except the definitions of ''dispersion technique'' and ''good engineering practice stack height'', and Title 32 ''EMISSION STANDARDS'' Sections 32–100 through 32–104 of the Lane Regional Authority Rules, submitted by the State Department of Environmental Quality on March 2, 1983; clarifying letter dated June 20, 1984.

(63) On May 6, 1983, the Oregon Department of Environmental Quality submitted revisions to its rules as follows:

(A) Revisions to the ''New Source Review'' rule consisting of an amended section OAR 340–20–225, specifically, the deletion of the definitions of ''Dispersion Technique'' (OAR 340–20–225(7)) and ''Good Engineering Practice Stack Height'' (OAR 340–20–225(11)), the renumbering of OAR 340–20–225, the revision of the definition of ''Nonattainment Area'' (OAR 340–20–225(14)), and changes to numerous references to coincide with the new numbering; the deletion of subsection OAR 340–20–240(7) ''Growth Increments'' and the addition of a new section OAR 340–20–241 ''Growth Increments;'' an amended section OAR 340–20–245, specifically, revised subsections OAR 340–20–245(2)(c) and OAR 340–20–245(4), and changes to numerous references to coincide with the new numbering of the definitions in OAR 340–20–225; and amendment to subsection)AR 340–20–260(2); a revised reference in OAR 340–20–265(6) to coincide with the new numbering of a definition; and the deletion of section OAR 340–20–275 ''Stack Heights''.

(B) The addition of a new ''Stack Heights and Dispersion Techniques'' rule (OAR 340–20–340 and 345);

(C) Revisions to the ''Portable Hot Mix Asphalt Plants'' rule (OAR 340–25–120; and

(D) The deletion of OAR 340–22–108 ''Applicability of Alternative Control Systems.''

(64) Amendments to the fees in the ''Air Contaminant Discharge Permit'' rule (OAR 340–20–155 Table 1 and OAR 340–20–165) submitted by the Oregon Department of Environmental Quality on June 3, 1983.

(65) On October 26, 1983, and December 14, 1983, the State of Oregon Department of Environmental Quality submitted four separate revisions to their plan. On October 26, 1983, the State submitted a revised air emergency episode plan (OAR 340–27–005 through 340–27–030 (effective October 7, 1983), revisions to gasoline marketing rules for the Medford-Ashland ozone nonattainment area (OAR 340–22–110(1)(a), effective October 7, 1983, and a revised ozone ambient air quality standard for the Lane Regional Air Pollution Authority (Section 31–035 Ozone, effective July 12, 1983). On December 14, 1983, the State submitted revisions to the automobile inspection and maintenance program for Portland (OAR 340–24–306 through 340-24–350, effective November 18, 1983). EPA is also approving OAR 340–27–035 which requires an ''operation and maintenance manual'' for administering the provisions of the Emergency Episode Plan (effective October 7, 1983).

(66) On October 20, 1982, the State of Oregon Department of Environmental Quality submitted a revision to the Medford, Oregon, Carbon Monoxide Attainment Plan which is contained in the Oregon State Implementation Plan. This plan builds upon the plan submitted in June 1979.

(67) On April 25, 1983, the State Department of Environmental Quality submitted Section 4.10, ''Medford-Ashland Air Quality Maintenance Area State Implementation Plan for Particulate Matter.''

(68) Amendments to the Open Burning Rules (OAR 340–23–022 through 115), submitted by the State Department of Environmental Quality on June 5, 1984.

(69) Amendments to the Refuse Burning Equipment Limitations rules, specifically OAR 340–21–005 (1) and (4),

OAR 340–21–025(2)(b), and OAR 340–21–027, were submitted by the State Department of Environmental Quality on January 16, 1984; and amendments to the Open Field Burning rules, specifically, the addition of new sections 340–21–001, 340–26–003, 340–26–031, 340–26–035, 340–26–040 and 340–21–045, revisions to sections 340–26–005, 340–26–013, 340–26–015, 340–26–010 and replacing it with a new section 340–26–010, the deletion of the existing section 340–26–011 and 340–26–020, were submitted by the State Department of Environmental Quality on March 14, 1984.

(70) On December 10, 1984, the Oregon Department of Environmental Quality submitted revisions to its Civil Penalty Rules (OAR 340–12) which deleted Sections 005 through 025 and 052 through 068; amended Sections 030, 040 and 050; and added Sections 070 and 075. Sections 035 and 045 were retained.

(71) Revisions to the Oregon State Implementation Plan were submitted by the Director on July 26, 1984, and August 7, 1984. Revisions are woodstove certification program rules (OAR 340–21–100 to 340–21–190), Oregon Revised Statutes 468.630 to 468.655 and amendment to field burning introduction (OAR 340–26–001) and repeal the field burning rules relating to tax credits (OAR 340–26–030).

(i) Incorporation by reference:

(A) Woodstove certification program rules (OAR 340–21–100 to 340–21–190) as published in the Oregon Administrative Rules, November 1984.

(B) The Oregon Revised Statutes 468.630 to 468.655 as signed by the Governor on July 5, 1984.

(C) Amendment to the field burning rule introduction (OAR 340–60–001) as adopted by the Oregon Environmental Commission on June 29, 1984.

(72) Revisions to the Oregon SIP were submitted by the Director on May 6, 1985. Revisions are: Definitions to the Vehicle Inspection Operating Rules (OAR 340–24–305 (20) and (22)) and the Light Duty Motor Vehicle Emission Control Test Method (OAR 340–24–310 through 350 as amended).

(i) Incorporation by reference.

(A) Amendments to OAR (340–24–305 (20) and (22)) as adopted by the Environmental Quality Commission on November 2, 1984.

(B) Amendments to OAR 340–24–310 through 350 as amended as adopted by the Environmental Quality Commission on April 19, 1985.

(73) Amendments to the Lane Regional Air Pollution Authority Rules for Air Conveying Systems (Title 32, section 800) were submitted by the State Department of Environmental Quality on May 6, 1985.

(i) Incorporation by reference.

(A) Letter of May 6, 1985, to EPA from the Oregon Department of Environmental Quality, and Amendments to Title 32, section 800 of the Lane Regional Air Pollution Authority (LRAPA) as part of the Oregon State Implementation Plan. Revisions were approved at the LRAPA Board of Directors meeting on January 8, 1985, and approved by the Environmental Quality Commission on April 19, 1985.

(74) On September 25, 1984, the State of Oregon Department of Environmental Quality submitted an amendment to OAR 340–20–047, specifically Section 5.2 ''VISIBILITY PROTECTION PLAN FOR CLASS I AREAS.'' On September 25, 1984, October 22, 1985, and March 19, 1986, the State of Oregon Department of Environmental Quality submitted amendments to the ''New Source Review'' rules, specifically, amendments to OAR 340–20–225, OAR 340–20–230(1)(e) and (f), OAR 340–20–245(5), and OAR 340–20–245(7) (submitted on 9/25/84), amendments to OAR 340–20–245(3) (submitted on 9/25/84 and 10/22/85), OAR 340–20–276 (submitted on 9/25/84), and amendments to OAR 340–20–276(1) (submitted on 10/22/85 and 3/19/86).

(i) Incorporation by reference.

(A) Letter of September 25, 1984, from the Oregon State Department of Environmental Quality to EPA Region 10. Revisions to the Oregon Administrative Rules, Chapter 340, Division 20, adopted by the Environmental Quality Commission on September 14, 1984, as follows:

(*1*) OAR 340–20–047, Section 5.2 ''VISIBILITY PROTECTION PLAN FOR CLASS I AREAS,'' except for ''Reserved'' subsections 5.2.5 ''Best Available Retrofit Technology,'' 5.2.6 ''Integral Vistas,'' and 5.2.7 ''Control Strategies;''

(*2*) OAR 340–20–225 ''Definitions'' as amended;

(*3*) OAR 340–20–230 ''Procedural Requirements,'' subsection (1) ''Information Required,'' paragraphs (e) and (f) as amended;

(*4*) OAR 340–20–245 ''Requirements for Sources in Attainment or Unclassified Areas (Prevention of Significant Deterioration),'' subsection (5) ''Air Quality Monitoring,'' paragraph (a) as amended;

(*5*) OAR 340–20–245 ''Requirements for Sources in Attainment or Unclassified Areas (Prevention of Significant Deterioration),'' subsection (7) ''Sources Impacting Class I areas'' as amended.

(B) Letter of October 22, 1985, from the Oregon State Department of Environmental Quality to EPA Region 10. Revisions to the Oregon Administrative Rules, Chapter 340, Division 20, adopted by the Environmental Quality Commission on September 27, 1985, as follows:

(*1*) OAR 340–20–245 ''Requirements for Sources in Attainment or Unclassified Areas (Prevention of Significant Deterioration),'' subsection (3) ''Exemption for Sources Not Significantly Impacting Designated Nonattainment Areas,'' paragraph (a) as amended.

(C) Letter of March 19, 1986, from the Oregon State Department of Environmental Quality to EPA Region 10. Revisions to the Oregon Administrative Rules, Chapter 340, Division 20, adopted by the Environmental Quality Commission on November 22, 1985, as follows:

(*1*) OAR–340–20–276 ''Visibility Impact'' as amended.

(75) A revision to the Oregon State Implementation Plan was submitted by the Director of Department of Environmental Quality (DEQ) on October 9, 1985, and supplemented with technical appendices on February 13, 1986. This revision adds a mandatory vehicle Inspection and Maintenance (I/M) program to the existing Medford Carbon Monoxide plan, modifies the Oregon I/M regulations for underhood inspections by eliminating tampering checks of 1974 and older model vehicles and removes the existing section 110(a)(2)(I) construction moratorium.

(i) Incorporation by reference.

(A) A letter dated October 9, 1985, from Department of Environmental Quality to EPA Region 10.

(B) A letter dated February 13, 1986, from Department of Environmental Quality to EPA Region 10.

(C) OAR 340–24–301 (Boundary Designations), OAR 340–24–320 (Light Duty Motor Vehicle Emission Control Test Criteria), and OAR 340–24–325 (Heavy Duty Motor Vehicle Emission Control Test Criteria), which were adopted by the Environmental Quality Commission on September 27, 1985.

(D) October 20, 1982 letter to EPA from the Department of Environmental Quality and section 4.9.3.2 (Emission Reduction Necessary for Attainment) of the Control Strategy for Medford-Ashland Air Quality Maintenance Area 1982 State Implementation Plan Revision for Carbon Monoxide as adopted by the Environmental Quality Commission on October 15, 1982.

(E) Section 4.9.5.1 (Reasonable Further Progress) of the Control Strategy for Medford-Ashland Air Quality Maintenance Area 1982 State Implementation Plan Revision for Carbon Monoxide as adopted by the Environmental Quality Commission on October 15, 1982.

(F) Section 4.9.5.5 (Conformity of Federal Actions) of the Control Strategy for Medford-Ashland Quality Maintenance Area 1982 State Implementation Plan Revision for Carbon Monoxide as adopted by the Enviromental Quality Commission on October 15, 1982.

(G) Section 4.9.4 (Control Strategy) of the Control Strategy for Medford-Ashland Air Quality Maintenance Area 1982 State Implementation Plan Revision for the Carbon Monoxide as adopted by the Environmental Quality Commission on October 15, 1982.

(76) Revisions to the Oregon State Implementation Plan were submitted by the Director of the Department of Environmental Quality on August 5, 1985. Revisions are: Extension of existing emission standards for veneer dryers (OAR 340–25–315) to include sources located in special problem areas, and the deletion of any references to the implementation of compliance dates which have already passed.

(i) Incorporation by reference.

(A) Letter of August 5, 1985, from the Department of Environmental Quality to EPA and Amendments to OAR 340–

25–315, Veneer and Plywood Operations Rule, as adopted by the Environmental Quality Commission on July 19, 1985.

(77) On February 28, 1985, the Director of the Oregon Department of Environmental Quality submitted a request to EPA to redesignate the Medford-Ashland Air Quality Maintenance Area (AQMA) from nonattainment to attainment for the primary O_3 standard and a plan to maintain that standard.

(i) Incorporation by reference:

(A) Letter of February 28, 1985, from Oregon State Department of Environmental Quality to EPA Region 10.

(B) Oregon Administrative Rules, Chapter 340, Division 20, Section 4.8 ''Medford-Ashland Air Quality Maintenance Area Plan for Maintenance of Ozone Standard,'' adopted by the Oregon Environmental Quality Commission on January 25, 1985.

(78) On May 30, 1986, the State of Oregon Department of Environmental Quality submitted a new rule, OAR 340–20–037 ''Stack Heights and Dispersion Techniques'' and requested the deletion of the existing rules, OAR 340–20–340 and 345 ''Stack Heights and Dispersion Techniques''. On October 23, 1987, the State of Oregon Department of Environmental Quality submitted a letter indicating how this new rule will be implemented until a definition of the terms ''emission limitation'' and ''emission stan

(i) Incorporation by reference.

(A) Letter of May 30, 1986, from the Oregon State Department of Environmental Quality to EPA Region 10. Revisions to the Oregon Administrative Rules, Chapter 340, Division 20, Section 037 ''Stack Heights and Dispersion Techniques'', adopted by the Environmental Quality Commission on April 25, 1986.

(B) Letter of October 23, 1987, from the Oregon State Department of Environmental Quality to EPA Region 10.

(79) Revisions to the Oregon State Implementation Plan were submitted by the Director of the Department of Environmental Quality of October 15, 1986. Revisions are: OAR 340–24–330 (Light Duty Motor Vehicle Emission Control Cutpoints or Standards) and OAR 340–24–335 (Heavy Duty Gasoline Motor Vehicle Emission Control Emission Standards).

(i) Incorporation by reference. (A) Letter dated October 15, 1986 from the Director of the Department of Environmental Quality to EPA Region 10.

(B) OAR 340–24–330 (Light Duty Motor Vehicle Emission Control Cutpoints or Standards) as adopted by the Environmental Quality Commission on September 12, 1986.

(C) OAR 340–24–335 (Heavy Duty Gasoline Motor Vehicle Emission Control Emission Standards) as adopted by the Environmental Quality Commission on September 12, 1986.

(80) On May 23, 1986, the State of Oregon Department of Environmental Quality submitted a new paragraph (12), of OAR 340–20–165 ''Fees'', as a revision to the State Implementation Plan. This paragraph allows regional air pollution authorities to set a permit fee schedule for sources within their jurisdiction.

(i) Incorporation by reference.

(A) Letter dated May 23, 1986, from the State of Oregon Department of Environmental Quality to EPA Region 10. Oregon Administrative Rule, Chapter 340, Division 20, Section 340–20–165 ''Fees'', paragraph (12), adopted by the Environmental Quality Commission on March 14, 1986.

(81) Oregon Administrative Rules (OAR) Chapter 340, Division 20, Sections 200 through 215 (Conflict of Interest) submitted by the Director of the Department of Environmental Quality on May 30, 1986. These rules apply only to the Department of Environmental Quality and the Environmental Quality Commission, and not to the Lane Regional Air Pollution Authority and its Board of Directors.

(i) Incorporation by reference.

(A) Letter dated May 20, 1986, from the State of Oregon Department of Environmental Quality to EPA Region 10. Oregon Administrative Rules, Chapter 340, Division 20, Sections 200, 205, 210, and 215 (Conflict of Interest) which was adopted by the Environmental Quality Commission on April 25, 1986.

(82) On November 24, 1986, and supplemented on January 8, 1987, the Director of the Department of Environmental Quality submitted the Grants Pass carbon monoxide control strategy as a revision to the Oregon State Implementation Plan.

(i) Incorporation by reference.

(A) Letter dated November 24, 1986, from the Director of the Department of Environmental Quality to EPA Region 10.

(B) State of Oregon Clean Air Act Implementation Plan Section 4.11 Grants Pass Carbon Monoxide Control Strategy as adopted by the Environmental Quality Commission on October 24, 1986.

(ii) Additional information.

(A) Letter dated January 8, 1987, from the Director of the Department of Environmental Quality to EPA Region X.

(B) Technical appendices for the Grants Pass Carbon Monoxide Control Strategy, Appendix 4.11.1 through 10.

(83) On March 3, 1987, the Director of the Department of Environmental Quality submitted amendments to the Oregon visibility protection program as a revisions to the Oregon state implementation plan, specifically OAR 340–20–047, section 5.2 ''Visibility Protection Plan for Class I Areas,'' OAR 629–43–043 ''Smoke Management Plan,'' and Directive 1–4–1–601 ''Operational Guidance for the Oregon Smoke Management Program.''

(i) Incorporation by reference.

(A) Two letters dated March 3, 1987, from the Director of the Department of Environmental Quality to EPA Region 10 establishing the effective dates for Oregon Administrative Rules referenced in paragraphs (c)(83)(i) (B), (C), and (D) of this section.

(B) Oregon Administrative Rule, Chapter 340, Division 20, section 047, section 5.2 ''Visibility Protection Plan for Class I Areas'' as adopted by the Environmental Quality Commission on October 24, 1986.

(C) Oregon Administrative Rule, Chapter 629, Division 43, section 043 ''Smoke Management Plan'' as adopted by the Environmental Quality Commission on December 12, 1986.

(D) Directive 1–4–1–601 ''Operational Guidance for the Oregon Smoke Management Program'' as adopted by the Environmental Quality Commission on December 12, 1986.

(84) On September 28, 1988, the Director of the Department of Environmental Quality submitted the Lane Regional Air Pollution Authority Section 12-025 ''Conflict of Interest,'' of Title 12, ''Duties and Powers of Board and Director,'' adopted as Oregon Administrative Rules, Chapter 340, Division 20, Section 047, as a revision to the State implementation plan.

(1) Incorporation by reference.

(i) September 28, 1988, letter from the Director of the Department of Environmental Quality to EPA Region 10.

(ii) Lane Regional Air Pollution Authority Section 12-025 ''Conflict of Interest,'' of Title 12, ''Duties and Powers of Board and Director,'' as adopted as Oregon Administrative Rules, Chapter 340, Division 20, Section 047. This rule was adopted by the Environmental Quality Commission on September 9, 1988.

(85) On February 17, 1989, the State of Oregon Department of Environmental Quality submitted amendments to the Procedures for Issuance, Denial, Modification, and Revocation of Permits (OAR 340–14–007, 010, 020 (and 025), Air Contaminant Discharge Permit Notice Policy (OAR 340–20–150), and the New Source Review Procedural Requirements (OAR 340–20–230).

(i) Incorporation by reference.

(A) February 17, 1989, letter from the Director of the Department of Environmental Quality to EPA Region 10 submitting amendments to the Oregon state implementation plan.

(B) Oregon Administrative Rules, Chapter 340, Division 14 (Procedures for Issuance, Denial, Modification, and Revocation of Permits), section –007 (Exceptions); –010 (Definitions) (3); –020 (Application for a Permit) (1), (4)(b), and (5); –025 (Issuance of a Permit) (2), (3), (4), (5), and (6) as adopted by the Environmental Quality Commission on June 10, 1988.

(C) Oregon Administrative Rules, Chapter 340, Division 20 (Air Pollution Control, Air Contaminant Discharge Permit), Section –150 (Air Contaminant Discharge Permit Notice Policy) as adopted by the Environmental Quality Commission on June 10, 1988.

(D) Oregon Administrative Rules, Chapter 340, Division 20 (Air Pollution Control, New Source Review), Section –230 (Procedural Requirements) (3)(D) as adopted by the Environmental Quality Commission on June 10, 1988.

(86) Revisions to the Oregon State Implementation Plan were submitted

by the Director of the Department of Environmental Quality on February 24, 1989. The revision is to OAR–340–24–300 through 350 (Vehicle Inspection Program Operating Rules, Test Procedures and Licensed Exhaust Analyzer).

(i) Incorporation by reference.

(A) Letter dated February 24, 1989, from the Director of the Department of Environmental Quality to EPA Region 10.

(B) OAR 340–24–301 [Boundary Designations] (2); OAR 340–24–310 [Light Duty Motor Vehicle Emission Control Test Method] (6); OAR 340–24–320 (Light Duty Motor Vehicle Emission Control Test Criteria) (3)(a) introductory text, (3)(b)(4), (5), and (6)(a); OAR 340–24–325 [Heavy Duty Gasoline Motor Vehicle Emission Control Test Criteria] (3)(a) introductory text, (4), and (5); OAR 340–24–330 (Light Duty Motor Vehicle Emission Control Cutpoints or Standards) (3); and OAR 340–24–350 (Gas Analytical System Licensing Criteria) (1)(a)(C), (1)(a)(E), and (1)(c) as adopted by the Environmental Quality Commission on September 9, 1988.

(87) On May 30, 1986, the Director of the Department of Environmental Quality submitted revisions to Volume 2 ''The Federal Clean Air Act Implementation Plan (and Other State Regulations)'' and on July 11, 1986, a revised Section 3 ''Statewide Regulatory Provisions'' 'Subsection 3.1 Oregon Administrative Rule—Chapter 340' (OAR 340–30–015, 030, 031, 040, and 055) as revisions to the Oregon State Implementation Plan.

(i) Incorporation by reference.

(A) May 30, 1986, letter from the Director of the Department of Environmental Quality to EPA Region 10 submitting amendments to the Oregon state implementation plan.

(B) July 11, 1986, letter from the Director of the Department of Environmental Quality to EPA Region 10 submitting amendments to the Oregon state implementation plan.

(C) Volume 2 ''The Federal Clean Air Act Implementation Plan (and Other State Regulations)'' Section 1 (Introduction); Section 2 (General Administration); Section 3 (Statewide Regulatory Provisions) Introduction; Section 4 (Control Strategies for Nonattainment Areas) Introduction; Section 5 (Control Strategies for Attainment and Nonattainment Areas) Introduction and Section 5.2 (Prevention of Significant Deterioration); Section 6 (Ambient Air Quality Monitoring Program); Section 8 (Public Involvement); and Section 9 (Plan Revisions and Reporting), dated January 1986, as adopted by the Environmental Quality Commission on April 25, 1986.

(D) Volume 2 ''The Federal Clean Air Act Implementation Plan (and Other State Regulations),'' Section 3 (Statewide Regulatory Provisions), Subsection 3.1 Oregon Administrative Rule—Chapter 340 (OAR 340–14–005 to 050 [Procedures for Issuance, Denial, Modification, and Revocation of Permits] dated 10–1–89, OAR 340–20–046 [Records; Maintaining and Reporting] effective 10–1–72, OAR 340–20–047 [State of Oregon Clean Air Act Implementation Plan] effective 9–30–85, OAR 340–30–015 [Wood Waste Boilers] effective 10–29–80, and OAR 340–31–105 [Definitions]) effective 9–8–81.

(E) Volume 2 ''The Federal Clean Air Act Implementation Plan (and Other State Regulations),'' Section 3 ''(Statewide Regulatory Provisions)'', Subsection 3.1 Oregon Administrative Rule—Chapter 340, Division 30 (Specific Air Pollution Control Rules for the Medford-Ashland Air Quality Maintenance Area), Section 015 (Wood Waste Boilers); Section 030 (Wood Particle Dryers at Particleboard Plants); Section 031 (Hardboard Manufacturing Plants); Section 040 (Charcoal Processing Plants); and Section 055 (Source Testing) as adopted by the Environmental Quality Commission on June 13, 1986.

(88) A revision to the Oregon State Implementation Plan was submitted by the Director of the Oregon Department of Environmental Quality on September 14, 1989. The revision OAR–340–22–300 (Standard for Automotive Gasoline) is approved in full with the exception of section 300 (6). EPA only approves the sampling procedures and test methods specified in 40 CFR part 80 and is taking no action on the other test procedures referenced in section 300 (6) specifically the ASTM D#323 method and the California Air Resources rule methods.

(i) Incorporation by reference. (A) Letter dated September 14, 1989, from the Director of the Oregon Department of Environmental Quality to EPA Region 10. (B) Oregon Administrative Rule, chapter 340, Division 22 (General Gaseous Emissions), section 300 (standard for Automotive Gasoline) as adopted by the Environmental Quality Commission on June 2, 1989.

(89) On January 2, 1991, the Director of the Department of Environmental Quality submitted revisions to State of Oregon's Air Quality Control Plan Volume 2 (the Federal Clean Air Act State Implementation Plan and other State Regulations) as follows: OAR chapter 340, Division 20, Sections 350 to 380 (Excess Emissions). The Department of Environmental Quality also repealed OAR 340–21–070 and OAR 340–21–075 from the state of Oregon's Air Quality Control Plan Volume 2.

(i) Incorporation by reference.

(A) January 2, 1991, letter from the Director of the Department of Environmental Quality to EPA Region 10 submitting amendments to the Oregon state implementation plan.

(B) Oregon Administrative Rules, Chapter 340, Division 20 (General); –350 (Purpose and Applicability); –355 (Definitions); –360 (Planned Startup and Shutdown); –365 (Scheduled Maintenance); –370 (Upsets and Breakdowns); –375 (Reporting Requirements); and –380 (Enforcement Action Criteria) as adopted by the Environmental Quality Commission on may 25, 1990, and were effective on January 2, 1991.

(90) On January 14, 1991, the State of Oregon Department of Environmental Quality submitted amendments to the Parking Offsets in the Portland Central business District (OAR–340–20–405 through 340–20–430) in the State of Oregon Air Quality Control Program.

(i) Incorporation by reference.

(A) Letter dated January 4, 1991, from the Director of the Department of Environmental Quality to EPA Region 10 submitting an amendment to the Oregon Implementation Plan.

(B) Oregon Administrative Rules Chapter 340, Division 20 (Air Pollution) Control), section 405 through 430 (Parking Offsets in the Portland Central Business district). These rules were adopted by the Environmental Quality Commission on December 14, 1990.

(91) On September 14, 1989, the State of Oregon Department of Environmental Quality submitted an amendment to the rules for Notice of Construction and Approval of Plans (OAR–340–20–030).

(i) Incorporation by reference.

(A) September 14, 1989, letter from the Director of the Department of Environmental Quality to EPA Region 10 submitting amendments to the Oregon state implementation plan.

(B) Oregon Administrative Rules, Chapter 340, Division 20 (Air Pollution Control, Notice of Construction and Approval of Plans) Section –030 (Procedure), (4)(a) as adopted by the Environmental Quality Commission on April 14, 1989.

(92) On November 15, 1991, the Director of the Department of Environmental Quality submitted revisions to State of Oregon's Air Quality Control Plan Volume 2 (the Federal Clean Air Act State Implementation Plan and other State Regulations) as follows: Division 34—Residential Woodheating in OAR Chapter 340 which contains OAR 340–34–001 to 34–115 (Oregon Woodstove Certification—previously Division 21–100 to 21–190 of OAR Chapter 340); a new section OAR 340–34–150 to 34–175 (Woodburning Curtailment); and a new section OAR 340–34–200 to 34–215 (Woodstove Removal Contingency Program for PM_{10} Nonattainment Areas). Also OAR 340–23–030, 043, & 090 (Rules for Open Burning).

(i) Incorporation by reference.

(A) November 15, 1991, letter from the Director of the Department of Environmental Quality to EPA Region 10 submitting amendments to the Oregon state implementation plan.

(B) Oregon Administrative Rules, Chapter 340, Division 34 (Residential Wood Heating), section—001 (Purpose); –005 (Definitions); –010 (Requirements for the Sale of Woodstoves); –015 (Exemptions); –020 (Civil Penalties); –050 (Emission Performance Standards & Certification); –055 (Efficiency Testing Criteria & Procedures); –060 (General Certification Procedures); –065 (Changes in Woodstove Design); –070 (Labelling Requirements); –075 (Removal Label); –080 (Label Approval);

–085 (Laboratory Accreditation Requirements); –090 (Accreditation Criteria); –095 (Application for Laboratory Efficiency Accreditation); –100 (On-Site Laboratory Inspection and Stove Testing Proficiency Demonstration); –105 (Accreditation Application Deficiency, Notification and Resolution); –110 (Final Department Administrative Review and Certificate of Accreditation); –115 (Revocation and Appeals); –150 (Applicability); –155 (Determination of Air Stagnation Conditions); –160 (Prohibition on Woodburning During Periods of Air Stagnation); –165 (Public Information Program); –170 (Enforcement); –175 (Suspension of Department Program); –200 (Applicability); –205 (Removal and Destruction of Uncertified Stove Upon Sale of Home); –210 (Home Seller's Responsibility to Verify Stove Destruction); –215 (Home Seller's Responsibility to Disclose) as adopted by the Environmental Quality Commission on November 8, 1991 and effective on November 13, 1991.

(C) Oregon Administrative Rules, Chapter 340, Division 23 (Rules for Open Burning), section –030 (Definitions); –043 (Open Burning Schedule); and –090 (Coos, Douglas, Jackson and Josephine Counties) as adopted by the Environmental Quality Commission on November 8, 1991 and effective on November 13, 1991.

(93) On November 15, 1991, the Director of the Department of Environmental Quality submitted revisions to State of Oregon's Air Quality Control Plan Volume 2 (The Federal Clean Air Act State Implementation Plan and other State Regulations) as follows: Division 21—General Emission Standards for Particulate Matter in Chapter 340 which contains OAR 340–21–200 to –245.

(i) *Incorporation by reference.* (A) November 15, 1991, letter from the Director of the Department of Environmental Quality to EPA Region 10 submitting amendments to the Oregon State implementation plan.

(B) Oregon Administrative Rules, chapter 340, Division 21 (General Emission Standards for Particulate Matter) section Industrial Contingency Requirements for PM–10 Nonattainment Areas; –200 (Purpose); –205 (Relation to Other Rules); –210 (Applicability); –215 (Definitions); –220 (Compliance Schedule for Existing Sources); –225 (Wood-Waste Boilers); –230 (Wood Particulate Dryers at Particleboard Plants); –235 (Hardboard Manufacturing Plants) –240 (Air Conveying Systems); and –245 (Fugitive Emissions) as adopted by the Environmental Quality Commission on November 8, 1991 and effective on November 13, 1991.

(94) On May 30, 1986, and on November 15, 1991, the Director of the Department of Environmental Quality submitted revisions to State of Oregon's Air Quality Control Plan Volume 2 (The Federal Clean Air Act State Implementation Plan and other State Regulations) as follows: Division 25—Board Products Industries in OAR Chapter 340 which contains OAR 340–25–305 to 315.

(i) Incorporation by reference.

(A) November 15, 1991, letter from the Director of the Department of Environmental Quality to EPA Region 10 submitting amendments to the Oregon state implementation plan.

(B) Oregon Administrative Rules, Chapter 340, Division 25 (Specific Industrial Standards) section–305 (Definitions); and –315 (Veneer and Plywood Manufacturing Operations) as adopted by the Environmental Quality Commission on November 8, 1991 and effective on November 13, 1991.

(C) May 30, 1986, letter from the Director of the Department of Environmental Quality to EPA Region 10 submitting amendments to the Oregon state implementation plan.

(95) On May 20, 1988, the Director of the Department of Environmental Quality submitted revisions to State of Oregon's Air Quality Control Plan Volume 2 (The Federal Clean Air Act State Implementation Plan and other State Regulations) as follows: Chapter 340 Division 27 (Air Pollution Emergencies) section -005, -010, and -012.

(i) *Incorporation by reference.* (A) May 20, 1988, letter from the Director of the Department of Environmental Quality to EPA Region 10 submitting amendments to the Oregon state implementation plan.

(B) Oregon Administrative Rules, chapter 340, Division 27 (Air Pollution Emergencies) section -005 (Introduction); -010 (Episode Stage Criteria for Air Pollution Emergencies) and -012 (Special Conditions) as adopted by the

Environmental Quality Commission on April 29, 1988, and effective on May 19, 1988.

(96) On May 30, 1986, December 5, 1986, May 8, 1987, March 3, 1989, March 12, 1990, June 8, 1990, and November 15, 1991, the Director of the Department of Environmental Quality submitted revisions to the State of Oregon's Air Quality Control Plan Volume 2 (The Federal Clean Air State Implementation Plan and Other State Regulations). The revisions updated the Lane Regional Air Pollution Authority rules by adding new Titles 12, 14, 34, 38, and 47; revising existing Titles 11, 12, 15 (previously Title 13), 32, 33, 50 (previously Title 31), and 51; rescinding existing Titles 21, 22, and 36; and removing existing Titles 20, 42, 44, and 45 from the EPA-approved state implementation plan.

(i) Incorporation by reference.

(A) May 30, 1986, letter from the Director of the Oregon Department of Environmental Quality (ODEQ) to EPA Region 10 submitting amendments to the Oregon state implementation plan. Revisions were to: Title 11 (Policy and General Provisions), Title 12 (General Duties and Powers of Board and Director), Title 14 (Definitions), Title 32 (Emission Standards) and Title 33 (Prohibited Practices and Control of Special Classes), Title 34 (Air Contaminant Discharge Permits), Title 38 (New Source Review), and Title 47 (Rules for Open Outdoor Burning) as adopted by the Environmental Quality Commission on April 25, 1986, and state effective on May 8, 1986.

(B) December 5, 1986, letter from the Director of ODEQ to EPA Region 10 submitting amendments to the Oregon state implementation plan. Revisions were to: Title 14 (Definitions) and Title 38 (New Source Review) as adopted by the Environmental Quality Commission on October 24, 1986, and state effective on October 24, 1986.

(C) May 8, 1987, letter from the Director of ODEQ to EPA Region 10 submitting amendments to the Oregon state implementation plan. Revisions were to: Title 34 (Air Contaminant Discharge Permits) as adopted by the Environmental Quality Commission on April 17, 1987, and state effective on April 22, 1987.

(D) March 3, 1989, letter from the Director of ODEQ to EPA Region 10 submitting amendments to the Oregon state implementation plan. Revisions were to: Title 34 (Air Contaminant Discharge Permits), as adopted by the Environmental Quality Commission on November 4, 1988, and state effective on December 20, 1988.

(E) March 3, 1989, letter from the Director of ODEQ to EPA Region 10 submitting amendments to the Oregon state implementation plan. Revisions were to: Title 14 (Definitions), Title 31 which was revised and repromulgated as Title 50 (Ambient Air Standards), Title 38 (New Source Review), and Title 51 (Air Pollution Emergencies), as adopted by the Environmental Quality Commission on November 4, 1988, and state effective on December 20, 1988.

(F) March 12, 1990, letter from ODEQ to EPA Region 10 submitting amendments to the Oregon state implementation plan. Revisions were to: Title 34 (Air Contaminant Discharge Permits) as adopted by the Environmental Quality Commission on March 2, 1990, and state effective on February 14, 1991.

(G) June 8, 1990, letter from the Director of ODEQ to EPA Region 10 submitting amendments to the Oregon state implementation plan. Revisions were to: Title 13 (Enforcement Procedures) which was revised and repromulgated as Title 15 (Enforcement Procedures and Civil Penalties) as adopted by the Environmental Quality Commission on May 25, 1990, and state effective on February 14, 1991.

(H) November 15, 1991, letter from the Director of ODEQ to EPA Region 10 submitting amendment to the Oregon state implementation plan. Revisions were a new Title 12 (Definitions), and changes to Title 34 (Air Contaminant Discharge Permits) and Title 38 (New Source Review) as adopted by the Environmental Quality Commission on November 8, 1991, and state effective on November 13, 1991.

(I) August 26, 1993, supplemental information letter from ODEQ to EPA Region 10 assuring EPA that draft and proposed regulations submitted from Lane Regional Air Pollution Authority (LRAPA) as final versions of the rules were in fact made final with no change.

(97) On October 13, 1989, and November 15, 1991, the Director of the Department of Environmental Quality submitted revisions to OAR chapter 340 Division 30 (Specific Air Pollution Control Rules for Areas With Unique Air Quality Control Needs) as revisions to the State of Oregon's Air Quality Control Plan Volume 2 (The Federal Clean Air State Implementation Plan and Other State Regulations).

(i) *Incorporation by reference.*

(A) October 13, 1989, letter from the Director of the Department of Environmental Quality to EPA Region 10 submitting amendments to the Oregon state implementation plan.

(B) November 15, 1991, letter from the Director of the Department of Environmental Quality to EPA Region 10 submitting amendments to the Oregon state implementation plan.

(C) Oregon Administrative Rule 340 Division 30 (Specific Air Pollution Control Rules for Medford-Ashland Air Quality Maintenance Area and the Grants Pass Urban Growth Area) –010 (Definitions); –015 (Wood Waste Boilers) (except for (3)(c)); –025 (Air Conveying Systems); –040 (Charcoal Producing Plants); –043 (Control of Fugitive Emissions (Medford-Ashland AQMA Only); –044 (Requirement for Operating and Maintenance Plans (Medford-Ashland AQMA Only); –045 (Compliance Schedules); –046 (Emission Limits Compliance Schedules); –050 (Continuous Monitoring); –055 (Source Testing; –065 (New Source); –067 (Rebuilt Sources); as adopted by the Environmental Quality Commission on September 7, 1989, and effective on September 7, 1989.

(D) Oregon Administrative Rule 340 Division 30 (Specific Air Pollution Control Rules for Areas with Unique Air Quality Control Needs) section –005 (Purpose and Application; –010 (Definitions); –012 (Application); –015 (Wood Waste Boilers) (except for (3)(c)); –021 (Veneer Dryer Emission Limitations); –030 (Wood Particle Dryers At Particleboard Plants); –043 (Control of Fugitive Emissions (Medford-Ashland AQMA Only); –044 (Requirements for Operating and Maintenance Plans (Medford-Ashland AQMA Only); –046 (Emission Limits Compliance Schedules); –050 (Continuous Monitoring); –055 (Source Testing); –065 (New Sources); –067 (Rebuilt Sources); –115 (Dual Fuel Feasibility Study for Wood-Waste Boilers); –200 (Application), –205 (Compliance Schedule for Existing Sources), –210 (Woodwaste Boilers); –215 (Wood Particle Dryers At Particleboard Plants); –220 (Hardboard Manufacturing Plants); –225 (Air Conveying System), and –230 (Fugitive Emissions) as adopted by the Environmental Quality Commission on November 8, 1991, and effective on November 13, 1991.

(98) On October 14, 1992, the Director of the Department of Environmental Quality submitted revisions to Oregon's Sampling Manual (Volumes I and II) and the inclusion of a new Continuous Emission Monitoring Manual as revision to the State of Oregon's Air Quality Control Plan Volume 2 (The Federal Clean Air State Implementation Plan and Other State Regulations).

(i) Incorporation by reference.

(A) October 14, 1992, letter from the Director of the Department of Environmental Quality to EPA Region 10 submitting amendments to the Oregon state implementation plan.

(B) Oregon's Sampling Manual (Volumes I and II) as adopted by the Oregon Environmental Quality Commission on January 23, 1992, and effective on January 23, 1992.

(C) Continuous Emission Monitoring Manual as adopted by the Oregon Environmental Quality Commission on January 23, 1992, and effective on February 4, 1992.

(99) On November 21, 1990, the Director of the Department of Environmental Quality (ODEQ) submitted a State Implementation Plan for Particulate Matter, Grants Pass, Oregon, Moderate Nonattainment Area, A Plan for Attaining and Maintaining the National Ambient Air Quality Standards for PM_{10}. On November 15, 1991, the Director of ODEQ submitted an Addendum to the November 21, 1990 submittal.

(i) Incorporation by reference.

(A) November 21, 1990, letter from the Director of the Department of Environmental Quality to EPA Region 10 submitting revisions to the Oregon state implementation plan.

(B) November 15, 1991, letter from the Director of the Department of Environmental Quality to EPA Region 10 submitting revisions to the Oregon state implementation plan.

(C) State Implementation Plan for Particulate Matter, Grants Pass, Oregon Nonattainment Area, A Plan for Attaining and Maintaining the National Ambient Air Quality Standards for PM_{10} dated November 1990, adopted by the Environmental Quality Commission on November 2, 1990 and effective on November 2, 1990.

(D) PM_{10} Control Strategy for Particulate Matter (Addendum) Grants Pass, Oregon Nonattainment Area, A Plan for Attaining and Maintaining the National Ambient Air Quality Standards for PM_{10} dated October 1991, adopted by the Environmental Quality Commission on November 8, 1991, and effective on November 13, 1991.

(100) On May 15, 1991, the Director of the Department of Environmental Quality submitted revisions to the State of Oregon Implementation plans for volatile organic compound emissions (OAR 340–22–100 through 340–22–220, General Emission Standards for Volatile Organic Compounds), to bring about attainment of the National ambient air quality standards in ozone nonattainment areas.

(i) Incorporation by reference.

(A) May 15, 1991, letter from Oregon Department of Environmental Quality to EPA Region 10 submitting the VOC nonattainment area state implementation plan for Oregon.

(B) OAR 340–22–100 through 340–22–220, General Emission Standards for Volatile Organic Compounds, as adopted on May 14, 1991, and became effective on May 16, 1991.

(101) On July 28, 1989, the state of Oregon, through the Oregon Department of Environmental Quality, submitted a maintenance plan and a request to redesignate Eugene-Springfield to attainment for carbon monoxide (CO).

(i) Incorporation by reference.

(A) July 28, 1989, letter from Oregon Department of Environmental Quality to EPA Region 10 submitting a maintenance plan and a redesignation request for the Eugene-Springfield CO Air Quality Maintenance Area (AQMA). This plan was submitted as an amendment to the State of Oregon Implementation Plan and adopted by the Oregon Department of Environmental Quality Commission on December 9, 1988.

(B) Attainment Demonstration and Maintenance Plan for the Eugene-Springfield AQMA for CO.

(C) Letter from Lane Regional Air Pollution Authority and Lane Council of Governments, dated February 27, 1992, to EPA Region 10, committing to submit a contingency plan if a violation of the CO NAAQS occurs.

(102) On November 16, 1992, and on November 15, 1993, the Director of the Department of Environmental Quality submitted Emission Statement Rules as amendments to the State of Oregon Implementation Plan. The November 15, 1993, Emission Statement Rules revision to OAR chapter 340, Division 28, State of Oregon Implementation Plan, superseded the November 16, 1992 submittal.

(i) Incorporation by reference.

(A) November 16, 1992, letter from Oregon Department of Environmental Quality to EPA Region 10 submitting the emission statement SIP revision. This revision was submitted as an amendment to the State of Oregon Implementation Plan and adopted by the Environmental Quality Commission on November 10, 1992.

(B) Emission Statement Rules submitted as an amendment to the State of Oregon Implementation Plan, effective November 12, 1992.

(C) November 15, 1993, letter from Oregon Department of Environmental Quality to EPA Region 10 submitting a revision to the Emission Statement Rules. This revision was submitted as an amendment to the State of Oregon Implementation Plan and adopted by the Environmental Quality Commission on September 10 and October 29, 1993.

(D) Emission Statement Rules submitted as an amendment to the State of Oregon Implementation Plan, revising the air quality regulations in OAR, Chapter 340, Division 28, effective September 24, 1993.

(E) December 20, 1993, Completeness Determination letter to Oregon Department of Environmental Quality from EPA Region 10, advising that the November 15, 1993, Emission Statement

Rules submittal is a technically and administratively complete SIP revision.

(103) On May 14, 1993, the Director of the Oregon Department of Environmental Quality (ODEQ) submitted a committal state implementation plan (SIP) for a basic inspection and maintenance (I/M) program for Portland and Medford-Ashland CO nonattainment areas. On November 15, 1993, ODEQ submitted the basic I/M program.

(i) Incorporation by reference.

(A) May 14, 1993, letter from the Director of ODEQ to EPA Region 10 submitting a committal SIP for the I/M program.

(B) November 15, 1993, letter from the Director of ODEQ to EPA Region 10 submitting the I/M program for moderate CO nonattainment areas.

(C) OAR 340–24–309 through 350, ''Motor Vehicles,'' adopted on October 29, 1993, and effective on November 4, 1993.

(104) On November 16, 1992, the Oregon State Department of Environmental Quality submitted the formal SIP revision to Oregon's Administrative Rules (OAR) 340–20–136 and 340–22–440 through 340–22–640, adopted as part of the state of Oregon Clean Air Act Implementation Plan through OAR 340–20–047. This revision establishes and requires the implementation of an oxygenated gasoline program in the Clackamas, Jackson, Multnomah, Washington and Yamhill counties, and an eleven by twelve mile area surrounding Klamath Falls and a nine mile by nine mile area surrounding Grants Pass.

(i) Incorporation by reference.

(A) The November 16, 1992, letter from the Director of the Oregon State Department of Environmental Quality to EPA Region 10 submitting revisions to the Oregon SIP.

(B) Revisions to the Oregon SIP: Rules on Oxygenated Fuels, OAR 340–20–136 and 340–22–440 through 340–22–640, adopted as part of the State of Oregon Clean Air Act Implementation Plan through OAR 340–20–047, effective November 1, 1992.

(105) On November 15, 1993, the Director of ODEQ submitted Oregon's contingency measure plan as a revision to Oregon's SIP for carbon monoxide (CO) for Grants Pass, Medford, Portland, and Klamath Falls, Oregon.

(i) Incorporation by reference.

(A) November 15, 1993, letter from the Director of ODEQ to EPA Region 10 submitting amendments to the Oregon SIP.

(B) Oregon Administrative Rules, Chapter 340–22–440 through 340–22–650, Vol. 2, Sections 4.2, 4.9, 4.ll, Carbon Monoxide Control Strategies, effective November 4, 1993.

(106) On February 4, 1994, the Oregon Department of Environmental Quality (ODEQ) submitted the formal SIP revision to Oregon's Administrative Rules (OAR) 340–34–005 through 340–34–115 (Residential Woodheating and Woodstove Certification Program). This revision includes the repeal of OAR 340–34–55, OAR 340–34–65 as well as OAR 340–34–075 through 340–34–115.

(i) Incorporation by reference.

(A) February 4, 1994, letter from the Director of ODEQ to EPA Region 10 submitting a revision to the Woodstove Certification and Efficiency Testing Program.

(B) OAR 340–34–005 through 115, Residential Woodheating and Woodstove Certification Program, adopted on December 10, 1993, and effective on January 3, 1994.

(107) On November 15, 1991, the ODEQ submitted a PM–10 nonattainment area SIP for La Grande, Oregon.

(i) Incorporation by reference.

(A) November 15, 1991 letter from ODEQ to EPA Region 10 submitting the PM–10 nonattainment area SIP for La Grande, Oregon.

(B) PM–10 Control Strategy for Particulate Matter, October 1991, La Grande, Oregon Nonattainment Area, as adopted by the Environmental Quality Commission on November 8, 1991.

(108) On November 15, 1991 the Director of ODEQ submitted amendments to Oregon's SIP to include a PM–10 control strategy for Eugene-Springfield and LRAPA title 39.

(i) Incorporation by reference.

(A) November 15, 1991 letter from the Director of ODEQ to EPA Region 10 submitting amendments to the Oregon SIP.

(B) The PM–10 control strategy for Eugene-Springfield, adopted by the OEQC on January 31, 1991, and LRAPA

title 39 (Contingency for PM–10 sources in the Eugene-Springfield nonattainment area), adopted by the OEQC on November 8, 1991.

(C) April 13, 1994 letter from the Director of ODEQ to EPA Region 10 submitting amendments to the Oregon SIP.

(D) Amendments to Lane Regional Air Pollution Authority Rules as a revision to the Oregon SIP (title 16), adopted by the OEQC on March 11, 1994.

(109) On October 27, 1993, the Director of ODEQ submitted OAR 340–24–307, Motor Vehicle Inspection Program Fee Schedule, as an amendment to the Oregon SIP. On November 15, 1993, the Director of ODEQ submitted Section 3.1, OAR 340–24–309 through 340–24–350 and section 5.4, Motor Vehicle Inspection and Maintenance Plan, as amendments to the Oregon SIP. On June 14, 1994 EPA's Regional Administrator, Chuck Clarke, received Section 3.1, OAR 340–24–309 through 340–24–355 and section 5.4, Motor Vehicle Inspection and Maintenance Plan, from the Director of ODEQ as amendments to the Oregon SIP.

(i) Incorporation by reference.

(A) October 27, 1993 letter from the Director of ODEQ to the Regional Administration of EPA submitting a revision to the Oregon SIP, Motor Vehicle Inspection Program Fee Schedule.

(B) November 15, 1993 letter from the Director of ODEQ to the Regional Administrator of EPA submitting revisions to the Oregon SIP, Vehicle Inspection and Maintenance Program.

(C) June 13, 1994 letter from the Director of ODEQ to the Regional Administrator of EPA submitting revisions to the Oregon SIP, Vehicle Inspection and Maintenance Program.

(D) Oregon's Motor Vehicle Inspection Program Fee Schedule, OAR 340–24–307, adopted by the Environmental Quality Commission on January 29, 1993.

(E) Oregon's Vehicle Inspection and Maintenance Program, OAR 340–24–309, 310, 315, 320, 330, 335, 340, 350, and Volume 2 Section 5.4, Motor Vehicle Inspection and Maintenance Plan, adopted by the Environmental Quality Commission on October 29, 1993.

(F) Oregon's Vehicle Inspection and Maintenance Program, Section 3.1, OAR 340–24–300 through 340–24–355, and Section 5.4, adopted by the Environmental Quality Commission on June 3, 1994.

(110) On May 28, 1993, the Director of ODEQ submitted two separate sets of revisions to its air quality regulations, OAR, Chapter 340, Division 25. One submittal was housekeeping amendments affecting all of Division 25; the second submittal was specifically Kraft Pulp Mill rules (OAR 340–25–150 through –205) and Neutral Sulfite Semi-Chemical Pulp Mill regulations (OAR 340–25–220 through –234). On November 15, 1993, the Director of ODEQ submitted a revision to OAR, Chapter 340, Division 25. On April 13, 1994, the Director of ODEQ submitted revisions to the Oregon SIP for LRAPA's Title 47, Outdoor Open Burning.

(i) Incorporation by reference.

(A) EPA received on May 28, 1993, two letters from the Director, ODEQ, to the Regional Administrator, EPA, submitting housekeeping amendments to Division 25: Housekeeping amendments to Division 25 (OAR 340–25–005 through 025 and OAR 340–25–105 through 340–25–430), effective March 10, 1993; and revisions to the Oregon SIP for Kraft Pulp Mill Amendments and Neutral Sulfite Semi-Chemical Pulp Mill Regulations: Kraft Pulp Mill Rules (OAR 340–25–150 through 205) and the Neutral Sulfite Semi-Chemical Pulp Mill Pulp Mills (OAR 340–25–220 through 234), excluding all references to total reduced sulfur, effective January 24, 1990.

(B) November 15, 1993, letter from the Director, ODEQ, to the Regional Administrator, EPA, submitting revisions to the Oregon SIP for OAR, Chapter 340, Division 25: Amendments to OAR Chapter 340, Division 25 (OAR 340–25–160, 340–25–222, 340–25–275, 230–25–310, 340–25–420), effective November 4, 1993.

(C) April 13, 1994, letter from the Director, ODEQ, to the Regional Administrator, EPA, submitting revisions to LRAPA, Title 47: Title 47, Lane Regional Air Pollution Authority, August 11, 1992, *Outdoor Open Burning*, effective January 1, 1993.

(111) The EPA approves a revision to the State of Oregon's Air Quality Control Plan Volume 2 (The Federal Clean Air Act State Implementation Plan

and other State Regulations), specifically a revision to Section 2.2—Legal Authority and a revision to Chapters 468 and 468A of the Oregon Revised Statutes (ORS).

(i) Incorporation by reference.

(A) On July 29, 1992 and August 30, 1994, ODEQ submitted to EPA a revision to Oregon Revised Statutes (ORS), Chapter 468 (1993 Edition), and Chapter 468A (1993 Edition), both of which were amended and adopted through August 1993 and in effect on November 4, 1993; and a revised Section 2.2—Legal Authority, including subsections 2.2.1 through 2.2.9, dated and revised July 29, 1992, the date of the official attached transmittal letter.

(112) On November 16, 1992, the Director for the Oregon Department of Environmental Quality (ODEQ) submitted the Oregon State Small Business Stationary Source Technical and Environmental Compliance Assistance Program and on May 16, 1995, the Administrator for ODEQ submitted the Small Business Assistance Program Confidentiality Option as revisions to the Oregon State Implementation Plan.

(i) Incorporation by reference.

(A) The November 16, 1992 letter from the Director of the Oregon Department of Environmental Quality submitting the Small Business Stationary Source Technical and Environmental Compliance Assistance Program to EPA; The Oregon Air Quality Small Business Assistance Program State Implementation Plan Revision adopted on October 16, 1992, and evidence that the State has the necessary legal authority, Oregon Revised Statutes 468A.330 (Small Business Stationary Source Technical and Environmental Compliance Assistance Program).

(B) The May 16, 1995 letter from the Administrator of the Oregon Department of Environmental Quality, Air Quality Division, submitting the Small Business Assistance Program confidentiality option to EPA; The Air Quality Guidance, Restriction of Information Obtained by the AQ Small Business Assistance Program adopted on May 16, 1995.

(113) On April 14, 1995, the Oregon Department of Environmental Quality submitted a revision to its SIP for the State of Oregon to include the Transportation Conformity: OAR 340–20–710 through 340–20–1080.

(i) Incorporation by reference.

(A) April 14, 1995 letter from ODEQ director Lydia Taylor to EPA Regional Administrator Chuck Clarke submitting a revision to the Oregon SIP to include the Transportation Conformity: OAR 340–20–710 through 340–20–1080; Division 20, Air Pollution Control, Criteria and Procedures for Determining Conformity to State or Federal Implementation Plans of Transportation Plans, Programs, and Projects Funded or Approved Under Title 23 U.S.C. or the Federal Transit Act, effective March 29, 1995.

[37 FR 10888, May 31, 1972]

EDITORIAL NOTE: For FEDERAL REGISTER citations affecting § 52.1970, see the List of CFR Sections Affected in the Finding Aids section of this volume.

EFFECTIVE DATE NOTE: At 61 FR 24712, May 16, 1996, § 52.1970 was amended by adding paragraph (c) (113), effective July 15, 1996.

§ 52.1971 Classification of regions.

The Oregon plan was evaluated on the basis of the following classifications:

Air quality control region	Pollutant				
	Particulate matter	Sulfur oxides	Nitrogen dioxide	Carbon monoxide	Ozone
Portland Interstate	I	IA	III	I	I
Southwest Oregon Intrastate	II	III	III	III	III
Northwest Oregon Intrastate	III	III	III	III	III
Central Oregon Intrastate	II	III	III	III	III
Eastern Oregon Intrastate	II	III	III	III	III

[37 FR 10888, May 31, 1972, as amended at 45 FR 42278, June 24, 1980]

§ 52.1972 Approval status.

With the exceptions set forth in this subpart, the Administrator approves Oregon's plan for the attainment and maintenance of the national standards under section 110 of the Clean Air Act. Furthermore, the Administrator finds that the carbon monoxide and ozone attainment plans satisfy all requirements of part D, title 1, of the Clean Air Act as amended in 1977, except as noted in the following sections. In addition, continued satisfaction of part D requirements for the ozone portion of the SIP depends on the adoption and submittal of RACT requirements by July 1, 1980, for the sources covered by CTGs issued between January 1978 and January 1979. Additional RACT requirements must be submitted by each subsequent January for sources covered by CTGs issued by the previous January. Further, new source review permits issued pursuant to section 173 of the Clean Air Act will not be deemed valid by EPA unless the provisions of Section V of the emission offset interpretive rule published on January 16, 1979 (44 FR 3274) are met.

[38 FR 16168, June 20, 1973, as amended at 45 FR 42278, June 24, 1980; 47 FR 28373, June 30, 1982]

§ 52.1973—52.1976 [Reserved]

§ 52.1977 Content of approved State submitted implementation plan.

The following sections of the State air quality control plan (as amended on the dates indicated) have been approved and are part of the current state implementation plan.

STATE OF OREGON AIR QUALITY CONTROL PROGRAM

VOLUME 2–THE FEDERAL CLEAN AIR ACT IMPLEMENTATION PLAN (AND OTHER STATE REGULATIONS)

Section

1. Introduction (1–86)

2. General Administration (1–86)

2.1 Agency Organization (1–86)
2.2 Legal Authority (1–86)
2.3 Resources (1–86)
2.4 Intergovernmental Cooperation and Consultation (1–86)
2.5 Miscellaneous Provisions (1–86)

3. Statewide Regulatory Provisions

3.1 Oregon Administrative Rules–Chapter 340 (1–86)

Division 12–Civil Penalties

Sec. 030 Definitions (11–8–84)
Sec. 035 Consolidation of Proceedings (9–25–74)
Sec. 040 Notice of Violation (12–3–85)
Sec. 045 Mitigating and Aggravating Factors (11–8–84)
Sec. 050 Air Quality Schedule of Civil Penalties (11–8–84)
Sec. 070 Written Notice of Assessment of Civil Penalty; When Penalty Payable (9–25–74)
Sec. 075 Compromise or Settlement of Civil Penalty by Director (11–8–84)

Division 14–Procedures for Issuance, Denial, Modification, and Revocation of Permits (4–15–72)

Sec. 005 Purpose (4–15–72)
Sec. 007 Exceptions (6–10–88)
Sec. 010 Definitions (4–15–72), except (3) ''Director'' (6–10–88)
Sec. 015 Type, Duration, and Termination of Permits (12–16–76)
Sec. 020 Application for a Permit (4–15–72), except(1), (4)(b), (5) (6–10–88)
Sec. 025 Issuance of a Permit (4–15–72), except(2), (3), (4), (5), (6) (6–10–88)
Sec. 030 Renewal of a Permit (4–15–72)
Sec. 035 Denial of a Permit (4–15–72)
Sec. 040 Modification of a Permit (4–15–72)
Sec. 045 Suspension or Revocation of a Permit (4–15–72)
Sec. 050 Special Permits (4–15–72)

Division 20–General

Sec. 001 Highest and Best Practicable Treatment and Control Required (3–1–72)
Sec. 003 Exceptions (3–1–72)

Registration

Sec. 005 Registration in General (9–1–70)
Sec. 010 Registration requirements (9–1–70)
Sec. 015 Re-registration (9–1–70)

Notice of Construction and Approval of Plans

Sec. 020 Requirement (9–1–70)
Sec. 025 Scope (3–1–72)
Sec. 030 Procedure (9–1–72), except (4)(a) Order Prohibiting Construction (4–14–89)
Sec. 032 Compliance Schedules (3–1–72)

Sampling, Testing, and Measurement of Air Contaminant Emissions

Sec. 035 Program (9–1–70)
Sec. 037 Stack Heights & Dispersion Techniques (5–12–86)
Sec. 040 Methods (9–11–70)
Sec. 045 Department Testing (9–1–70)

Sec. 046 Records; Maintaining and Reporting (10–1–72)
Sec. 047 State of Oregon Clean Air Act, Implementation Plan (9–30–85)
Sec. 136 Owners of Gasoline at Terminals, Distributors and Retail Outlets Required to Have Indirect Source Operating Permits (11–1–92)

Air Contaminant Discharge Permits

Sec. 140 Purpose (1–6–86)
Sec. 145 Renumbered to OAR 340–28–110
Sec. 150 Notice Policy (6–10–88)
Sec. 155 Permit Required (5–31–83)
Sec. 160 Multiple-Source Permit (1–6–76)
Sec. 165 Fees (3–14–86)
Sec. 170 Procedures For Obtaining Permits (1–11–74)
Sec. 175 Other Requirements (6–29–79)
Sec. 180 Registration Exemption (6–29–79)
Sec. 185 Permit Program For Regional Air Pollution Authority (1–6–76)

Conflict of Interest

Sec. 200 Purpose (10–13–78)
Sec. 205 Definitions (10–13–78)
Sec. 210 Public Interest Representation (10–13–78)
Sec. 215 Disclosure of Potential Conflicts of Interest (10–13–78)

New Source Review

Sec. 220 Applicability (9–8–81)
Sec. 225 Renumbered to OAR 340–28–110
Sec. 230 Procedural Requirements (10–16–84), except (3)(d) (6–10–88)
Sec. 235 Review of New Sources and Modifications for Compliance With Regulations (9–8–81)
Sec. 240 Requirements for Sources in Nonattainment Areas (4–18–83)
Sec. 245 Requirements for Sources in Attainment or Unclassified Areas (Prevention of Significant Deterioration) (10–16–85)
Sec. 250 Exemptions (9–8–81)
Sec. 255 Baseline for Determining Credit for Offsets (9–8–81)
Sec. 260 Requirements for Net Air Quality Benefit (4–18–83)
Sec. 265 Emission Reduction Credit Banking (4–18–83)
Sec. 270 Fugitive and Secondary Emissions (9–8–81)
Sec. 275 Repealed
Sec. 276 Visibility Impact (10–16–85)

Plant Site Emission Limits

Sec. 300 Policy (9–8–81)
Sec. 301 Requirement for Plant Site Emission Limits (9–8–81)
Sec. 305 Renumbered to OAR 340–28–110
Sec. 310 Criteria for Establishing Plant Site Emission Limits (9–8–81)
Sec. 315 Alternative Emission Controls (9–8–81)
Sec. 320 Temporary PSD Increment Allocation (9–8–81)

Stack Heights and Dispersion Techniques

Sec. 340 Definitions (4–18–83)
Sec. 345 Limitations (4–18–83)
Sec. 350 Purpose and Applicability (1–2–91)
Sec. 355 Renumbered to OAR 340–28–110
Sec. 360 Planned Startup and Shutdown (1–2–91)
Sec. 365 Scheduled Maintenance (1–2–91)
Sec. 370 Upsets and Breakdowns (1–2–91)
Sec. 375 Reporting Requirements (1–2–91)
Sec. 380 Enforcement Action Criteria (1–2–91)

Parking Offsets in the Portland Central Business District

Sec. 405 Scope (12–19–90)
Sec. 410 Definitions (12–19–90)
Sec. 420 Requirements for Parking Offsets (12–19–90)
Sec. 430 Overall Monitoring and Contingency Plan (12–19–90)

Division 21–General Emission Standards for Particulate Matter

Sec. 005 Definitions (1–16–84)
Sec. 010 Special Control Areas (7–11–70)
Sec. 015 Visible Air Contaminant Limitations (7–11–70)
Sec. 020 Fuel Burning Equipment Limitations (9–1–82)
Sec. 025 Refuse Burning Equipment Limitations (1–6–84)
Sec. 027 Municipal Waste Incinerator in Coastal Areas (1–16–84)
Sec. 030 Particulate Emission Limitations for Sources Other Than Fuel Burning and Refuse Burning Equipment (3–1–72)

Particulate Emissions From Process Equipment

Sec. 035 Applicability (3–1–72)
Sec. 040 Emission Standard (3–1–72)
Sec. 045 Determination of Process Weight (3–1–72)

Fugitive Emissions

Sec. 050 Definitions (3–1–72)
Sec. 055 Applicability (3–1–72)
Sec. 060 Requirements (3–1–72)

Upset Conditions

Sec. 070 Repealed
Sec. 075 Repealed

Industrial Contingency Requirements for PM–10 Nonattainment Areas

Sec. 200 Purpose (11–13–91)
Sec. 205 Relation to Other Rules (11–13–91)
Sec. 210 Applicability (11–13–91)
Sec. 215 Definitions (11–13–91)
Sec. 220 Compliance Schedule for Existing Sources (11–13–91)

Sec. 225 Wood-Waste Boilers (11–13–91)
Sec. 230 Wood Particulate Dryers at Particleboard Plants (11–13–91)
Sec. 235 Hardboard Manufacturing Plants (11–13–91)
Sec. 240 Air Conveying Systems (11–13–91)
Sec. 245 Fugitive Emissions (11–13–91)

Division 22–General Gaseous Emissions Sulfur Content of Fuels

Sec. 005 Definitions (3–1–72)
Sec. 010 Residual Fuel Oils (8–25–77)
Sec. 015 Distillate Fuel Oils (3–1–72)
Sec. 020 Coal (1–29–82)
Sec. 025 Exemptions (3–1–72)

General Emission Standards for Sulfur Dioxide

Sec. 050 Definitions (3–1–72)
Sec. 055 Fuel Burning Equipment (3–1–72)
Sec. 300 Reid Vapor Pressure for Gasoline, except that in Paragraph (6) only sampling procedures and test methods specified in 40 CFR part 80 are approved (6–15–89)

Motor Vehicle Fuel Specifications for Oxygenated Gasoline

Sec. 440 Policy (11–1–92)
Sec. 450 Definitions (11–1–92)
Sec. 460 Purpose and General Requirements (11–1–92)
Sec. 470 Control Areas (11–1–92)
Sec. 480 Average Oxygen Content Standard (11–1–92)
Sec. 490 Sampling, Testing and Oxygen Content (11–1–92)
Sec. 500 Alternative Compliance Options (11–1–92)
Sec. 510 Minimum Oxygen Content (11–1–92)
Sec. 520 Oxygenated Gasoline Blending (11–1–92)
Sec. 530 Registration (11–1–92)
Sec. 540 CAR, Distributor and Retail Outlet Operating Permits (11–1–92)
Sec. 550 Recordkeeping (11–1–92)
Sec. 560 Reporting (11–1–92)
Sec. 570 Prohibited Activities (11–1–92)
Sec. 580 Inspection and Sampling (11–1–92)
Sec. 590 Liability For Violation of a Prohibited Activity (11–1–92)
Sec. 600 Defenses For Prohibited Activities (11–1–92)
Sec. 610 Inability to Product Conforming Gasoline Due to Extraordinary Circumstances (11–1–92)
Sec. 620 Quality Assurance Program (11–1–92)
Sec. 630 Attest Engagements Guidelines When Prohibited Activities Alleged (11–1–92)
Sec. 640 Dispenser Labeling (11–1–92)

Division 23–Rules for Open Burning

Sec. 022 How to Use These Open Burning Rules (9–8–81)
Sec. 025 Policy (9–8–81)
Sec. 030 Definitions (6–16–84) (15) ''Disease and Pest Control'' (11–13–91)
Sec. 035 Exemptions, Statewide (6–16–84)
Sec. 040 General Requirements Statewide (9–8–81)
Sec. 042 General Prohibitions Statewide (6–16–84)
Sec. 043 Open Burning Schedule (11–13–91)
Sec. 045 County Listing of Specific Open Burning Rules (9–8–81)

Open Burning Prohibitions

Sec. 055 Baker, Clatsop, Crook, Curry, Deschutes, Gilliam, Grant, Harney, Hood River, Jefferson, Klamath, Lake, Lincoln, Malheur, Morrow, Sherman, Tillamook, Umatilla, Union, Wallowa, Wasco and Wheeler Counties (9–8–81)
Sec. 060 Benton, Linn, Marion, Polk, and Yamhill Counties (6–16–84)
Sec. 065 Clackamas County (6–16–84)
Sec. 070 Multnomah County (6–16–84)
Sec. 075 Washington County (6–16–84)
Sec. 080 Columbia County (9–8–81)
Sec. 085 Lane County (6–16–84)
Sec. 090 Coos, Douglas, Jackson and Josephine Counties (11–13–91)
Sec. 100 Letter Permits (6–16–84)
Sec. 105 Forced Air Pit Incinerators (9–8–81)
Sec. 110 Records and Reports (9–8–81)
Sec. 115 Open Burning Control Areas (6–16–84)

Division 24–Motor Vehicles Motor Vehicle Emission Control Inspection Test Criteria, Methods and Standards

Sec. 300 Scope (4–1–85)
Sec. 301 Boundary Designations (9–12–88)
Sec. 305 Definitions (4–1–85)
Sec. 306 Publicly Owned and Permanent Fleet Vehicle Testing Requirements (12–31–83)
Sec. 307 Motor Vehicle Inspection Program Fee Schedule (8–1–81)
Sec. 310 Light Duty Motor Vehicle Emission Control Test Method (9–12–88)
Sec. 315 Heavy Duty Gasoline Motor Vehicle Emission Control Test Method (12–31–83)
Sec. 320 Light Duty Motor Vehicle Emission Control Test Criteria (9–12–88)
Sec. 325 Heavy Duty Gasoline Motor Vehicle Emission Control Test Criteria (9–12–88)
Sec. 330 Light Duty Motor Vehicle Emission Control Cutpoints or Standards (8–1–81) Subpart (3) (9–12–86)
Sec. 335 Heavy Duty Gasoline Motor Vehicle EmissionControl Emission Standards (9–12–86)
Sec. 340 Criteria for Qualifications of Persons Eligible to Inspect Motor Vehicles and Motor Vehicle Pollution Control Systems and Execute Certificates (12–31–83)

Sec. 350 Gas Analytical System Licensing Criteria (9–12–88)

Division 25—Specific Industrial Standards Construction and Operation of Wigwam Waste Burners

Sec. 005 Definitions (3–10–93)
Sec. 010 Statement of Policy (3–10–93)
Sec. 015 Authorization to Operate a Wigwam Burner (3–10–93)
Sec. 020 Emission and Operation Standards for Wigwam Waste Burners (3–10–93)
Sec. 025 Monitoring and Reporting (3–10–93)

Hot Mix Asphalt Plants

Sec. 105 Definitions (3–10–93)
Sec. 110 Control Facilities Required (3–10–93)
Sec. 115 Other Established Air Quality Limitations (3–10–93)
Sec. 120 Portable Hot Mix Asphalt Plants (3–10–93)
Sec. 125 Ancillary Sources of Emission—Housekeeping of Plant Facilities (3–10–93)

Kraft Pulp Mills

Sec. 150 Definitions—excluding any reference to TRS (3–10–93)
Sec. 155 Statement of Policy (3–10–93)
Sec. 160 Repealed
Sec. 165 Emission Limitations—excluding any reference to TRS (3–10–93)
Sec. 170 More Restrictive Emission Limits (3–10–93)
Sec. 175 Plans and Specifications (3–10–93)
Sec. 180 Monitoring—excluding any reference to TRS (3–10–93)
Sec. 185 Reporting—excluding any reference to TRS (3–10–93)
Sec. 190 Upset Conditions—excluding any reference to TRS (3–10–93)
Sec. 195 Repealed
Sec. 205 Chronic Upset Conditions (1–24–90)

Neutral Sulfite Semi-Chemical (NSSC) Pulp Mills

Sec. 220 Definitions (3–10–93)
Sec. 222 Repealed
Sec. 224 Emission Limitations—excluding any reference to TRS (3–10–93)
Sec. 226 More Restrictive Emission Limits—excluding any reference to TRS (3–10–93)
Sec. 228 Plans and Specifications (3–10–93)
Sec. 230 Monitoring—excluding any reference to TRS (3–10–93)
Sec. 232 Reporting—excluding any reference to TRS (3–10–93)
Sec. 234 Upset Conditions—excluding any reference to TRS (3–10–93)

Primary Aluminum Plants

Sec. 255 Statement of Purpose (3–10–93)
Sec. 260 Definitions (3–10–93)
Sec. 265 Emission Standards (3–10–93)
Sec. 270 Special Problem Areas (3–10–93)
Sec. 275 Repealed
Sec. 280 Monitoring (3–10–93)
Sec. 285 Reporting (3–10–93)

Specific Industrial Standards

Sec. 305 Definitions (3–10–93)
Sec. 310 General Provisions (11–4–93)
Sec. 315 Veneer and Plywood Manufacturing Operations (3–10–93)
Sec. 320 Particleboard Manufacturing Operations (3–10–93)
Sec. 325 Hardboard Manufacturing Operations (3–10–93)

Regulations for Sulfite Pulp Mills

Sec. 350 Definitions (3–10–93)
Sec. 355 Statement of Purpose (3–10–93)
Sec. 360 Minimum Emission Standards (3–10–93)
Sec. 365 Repealed
Sec. 370 Monitoring and Reporting (3–10–93)
Sec. 375 Repealed
Sec. 380 Exceptions (3–10–93)

Laterite Ore Production of Ferronickel

Sec. 405 Statement of Purpose (3–10–93)
Sec. 410 Definitions (3–10–93)
Sec. 415 Emission Standards (3–10–93)
Sec. 420 Repealed
Sec. 425 Repealed
Sec. 430 Monitoring and Reporting (3–10–93)

Division 26–Rules for Open Field Burning (Willamette Valley)

Sec. 001 Introduction (7–3–84)
Sec. 003 Policy (3–7–84)
Sec. 005 Definitions (3–7–84)
Sec. 010 General Requirement (3–7–84)
Sec. 011 Repealed
Sec. 012 Registration, Permits, Fees, Records (3–7–84)
Sec. 013 Acreage Limitations, Allocations (3–7–84)
Sec. 015 Daily Burning Authorization Criteria (3–7–84)
Sec. 020 Repealed
Sec. 025 Civil Penalties (3–7–84)
Sec. 030 Repealed
Sec. 031 Burning by Public Agencies (Training Fires) (3–7–84)
Sec. 035 Experimental Burning (3–7–84)
Sec. 040 Emergency Burning, Cessation (3–7–84)
Sec. 045 Approved Alternative Methods of Burning (PropaneFlaming) (3–7–84)

Division 27–Air Pollution Emergencies

Sec. 005 Introduction (5–20–88)
Sec. 010 Episode State Criteria for Air Pollution Emergencies (5–20–88)
Sec. 012 Special Conditions (5–20–88)

Sec. 015 Source Emission Reduction Plans (10–24–83)
Sec. 020 Repealed
Sec. 025 Regional Air Pollution Authorities (10–24–83)
Sec. 035 Operation and Maintenance Manual (10–24–83)

Division 28–Stationary Source Air Pollution Control and Permitting Procedures

Sec. 110 Definitions (11–4–93)
Sec. 1500 Purpose and Applicability (11–4–93)
Sec. 1510 Requirements (11–4–93)
Sec. 1520 Submission of Emission Statement (9–24–93)

Division 30–Specific Air Pollution Control Rules for the Medford-Ashland Air Quality Maintenance Area

Sec. 005 Purposes and Application (11–13–91)
Sec. 010 Definitions (11–13–91)
Sec 012 Application (11–13–91)
Sec. 015 Wood Waste Boilers (11–13–91) except (3)(c)
Sec. 021 Veneer Dryer Emission Limitations (11–13–91)
Sec. 025 Air Conveying Systems (9–7–89)
Sec. 030 Wood Particle Dryers at Particleboard Plants (11–13–91)
Sec. 031 Hardwood Manufacturing Plants (5–6–81)
Sec. 035 Wigwam Waste Burners (10–29–80)
Sec. 040 Charcoal Producing Plants (9–7–89)
Sec. 043 Control of Fugitive Emissions (Medford-Ashland Only) (11–13–91)
Sec. 044 Requirement for Operation and Maintenance Plans (Medford-Ashland Only) (11–13–91)
Sec. 045 Repealed
Sec. 046 Emission Limits Compliance Schedules (11–13–91)
Sec. 050 Continuous Monitoring (11–13–91)
Sec. 055 Source Testing (11–13–91)
Sec. 060 Repealed
Sec. 065 New Sources (11–13–91)
Sec. 070 Open Burning (4–7–78)
Sec. 115 Dual Fuel Feasibility Study for Wood-Waste Boilers (11–13–91)
Sec. 200 Application (11–13–91)
Sec. 205 Compliance Schedule for Existing Sources (11–13–91)
Sec. 210 Woodwaste Boilers (11–13–91)
Sec. 215 Wood Particle Dryers At Particleboard Plants (11–13–91)
Sec. 220 Hardboard Manufacturing Plants (11–13–91)
Sec. 225 Air Conveying Systems (11–13–91)
Sec. 230 Fugitive Emissions (11–13–91)

Division 31–Ambient Air Quality Standards

Sec. 005 Definitions (3–1–72)
Sec. 010 Purpose and Scope of Ambient Air Quality Standards (3–1–72)
Sec. 015 Suspended Particulate Matter (3–1–72)
Sec. 020 Sulfur Dioxide (3–12–72)
Sec. 025 Carbon Monoxide (3–1–72)
Sec. 030 Ozone (1–29–82)
Sec. 035 Hydrocarbons (3–1–72)
Sec. 040 Nitrogen Dioxide (3–1–72)
Sec. 045 Repealed
Sec. 050 Repealed
Sec. 055 Ambient Air Quality Standard for Lead (1–21–83)

Prevention of Significant Deterioration

Sec. 100 General (6–22–79)
Sec. 110 Ambient Air Increments (6–22–79)
Sec. 115 Ambient Air Ceilings (6–22–79)
Sec. 120 Restrictions on Area Classifications (6–22–79)
Sec. 125 Repealed
Sec. 130 Redesignation (6–22–79)

Division 34–Residential Wood Heating

Sec. 001 Purpose (11–13–91)
Sec. 005 Definitions (1–3–94)
Sec. 010 Requirements for Sale of Woodstoves (1–3–94)
Sec. 015 Exemptions (1–3–94)
Sec. 020 Civil Penalties (11–13–91)

Woodstove Certification Program

Sec. 045 Applicability (1–3–94)
Sec. 050 Emission Performance Standards & Certification (1–3–94)
Sec. 055 Repealed
Sec. 060 General Certification Procedures (1–3–94)
Sec. 065 Repealed
Sec. 070 Labelling Requirements (1–3–94)
Sec. 075 Repealed
Sec. 080 Repealed
Sec. 085 Repealed
Sec. 090 Repealed
Sec. 095 Repealed
Sec. 100 Repealed
Sec. 105 Repealed
Sec. 110 Repealed
Sec. 115 Repealed

Woodburning Curtailment

Sec. 150 Applicability (11–13–91)
Sec. 155 Determination of Air Stagnation Conditions (11–13–91)
Sec. 160 Prohibition on Woodburning During Periods of Air Stagnation (11–13–91)
Sec. 165 Public Information Program (11–13–91)
Sec. 170 Enforcement (11–13–91)
Sec. 175 Suspension of Department Program (11–13–91)

Woodstove Removal Contingency Program for PM–10 Nonattainment Areas

Sec. 200 Applicability (11–13–91)
Sec. 205 Removal and Destruction of Uncertified Stove Upon Sale of Home (11–13–91)
Sec. 210 Home Seller's Responsibility to Verify Stove Destruction (11–13–91)

Sec. 215 Home Seller's Responsibility to Disclose (11–13–91)

3.2 Lane Regional Air Pollution Authority Regulations

Title 11 Policy and General Provisions

11–005 Policy (10–9–79)
11–010 Construction and Validity (10–9–79)

Title 12 General Duties and Powers of Board and Director

12–005 Authority of the Agency (11–8–83)
12–010 Duties and Powers of the Board of Directors (11–8–83)
12–020 Duties and Function of the Director (11–8–83)
12–025 Conflict of Interest (9–9–88)
12–035 Public Records and Confidential Information (11–8–83)

Title 12 Definitions (2–13–90)

Title 14 Definitions (7–12–88)

Title 15 Enforcement Procedure and Civil Penalties

15–001 Policy (2–13–90)
15–005 Definitions (2–13–90)
15–010 Consolidation of Proceedings (2–13–90)
15–015 Notice of Violation (2–13–90)
15–020 Enforcement Actions (2–13–90)
15–025 Civil Penalty Schedule Matrices (2–13–90)
15–030 Civil Penalty Determination Procedure (Mitigating and Aggravating Factors) (2–13–90)
15–035 Written Notice of Assessment of Civil Penalty–When Penalty Payable (2–13–90)
15–040 Compromise or Settlement of Civil Penalty by Director (2–13–90)
15–045 Stipulated Penalties (2–13–90)
15–050 Air Quality Classification of Violation (2–13–90)
15–055 Scope of Applicability (2–13–90)
15–060 Appeals (2–13–90)

Title 32 Emission Standards

32–005 General (9–14–82)
32–010 Restriction on Emission of Visible Air Contaminants; Including Veneer Dryers (9–14–82)
32–025 Exceptions–Visible Air Contaminant Standards (9–14–82)
32–030 Particulate Matter Weight Standards (9–14–82)
32–035 Particulate Matter Weight Standards–Existing Sources (9–14–82)
32–040 Particulate Matter Weight Standards–New Sources (9–14–82)
32–045 Process Weight Emission Limitations (9–14–82)
32–055 Particulate Matter Size Standard (9–14–82)
32–060 Airborne Particulate Matter (9–14–82)
32–065 Sulfur Dioxide Emission Limitations (9–14–82)
32–100 Plant Site Emission Limits Policy (9–14–82)
32–101 Requirement for Plant Site Emission Limits (9–14–82)
32–102 Criteria for Establishing Plant Site Emission Limits (9–14–82)
32–103 Alternative Emission Controls (Bubble) (9–14–82)
32–104 Temporary PSD Increment Allocation (11–8–83)
32–800 Air Conveying Systems (1–8–85)
32–990 Other Emissions (11–8–83)

Title 33 Prohibited Practices and Control of Special Classes

33–020 Incinerator and Refuse Burning Equipment (5–15–79)
33–025 Wigwam Waste Burners (5–15–79)
33–030 Concealment and Masking of Emissions (5–15–79)
33–045 Gasoline Tanks (5–15–79)
33–055 Sulfur Content of Fuels (5–15–79)
33–060 Board Products Industries (5–15–79)
33–065 Charcoal Producing Plants (5–15–79)
33–070 Kraft Pulp Mills (9–14–82)

Title 34 Air Contaminant Discharge Permits

34–001 General Policy and Discussion (1–9–90)
34–005 Definitions (2–13–90)
34–010 General Procedures for Obtaining Permits (1–9–90)
34–015 Special Discharge Permit Categories (1–9–90)
34–020 Discharge Permit Duration (1–9–90)
34–025 Discharge Permit Fees (1–9–90)
34–030 Source Emission Tests (1–9–90)
34–035 Upset Conditions (1–9–90)
34–040 Records (1–9–90)
34–045 General Procedures for Registration (1–9–90)
34–050 Compliance Schedules for Existing Sources Affected by New Rules (1–9–90)

Title 38 New Source Review

38–001 General Applicability (2–13–90)
38–005 Definitions (2–13–90)
38–010 General Requirements for Major Sources and Major Modifications (2–13–90)
38–015 Additional Requirements for Major Sources or Major Modifications Located in Nonattainment Areas (2–13–90)
38–020 Additional Requirements for Major Sources or Major Modifications in Attainment or Unclassified Areas (Prevention of Significant Deterioration) (2–13–90)
38–025 Exemptions for Major Sources and Major Modifications (2–13–90)
38–030 Baseline for Determining Credits for Offsets (2–13–90)

38–035 Requirements for Net Air Quality Benefit for Major Sources and Major Modifications (2–13–90)
38–040 Emission Reduction Credit Banking (2–13–90)
38–045 Requirements for Non-Major Sources and Non-Major Modifications (2–13–90)
38–050 Stack Height and Dispersion Techniques (2–13–90)

Title 47 Rules for Open Outdoor Burning

47–001 General Policy (8–14–84)
47–005 Statutory Exemptions from These Rules (8–14–84)
47–010 Definitions (9–8–92)
47–015 Open Burning Requirements (9–8–92)
47–020 Letter Permits (9–8–92)
47–025 Repealed
47–030 Summary of Seasons, Areas, and Permit Requirements for Open Outdoor Burning (9–8–92)

Title 50 Ambient Air Standards

50–005 General (7–12–88)
50–015 Suspended Particulate Matter (7–12–88)
50–025 Sulfur Dioxide (7–12–88)
50–030 Carbon Monoxide (7–12–88)
50–035 Ozone (7–12–88)
50–040 Nitrogen Dioxide (7–12–88)
50–045 Lead (7–12–88)

Title 51 Air Pollution Emergencies

51–005 Introduction (7–12–88)
51–010 Episode Criteria (7–12–88)
51–015 Emission Reduction Plans (7–12–88)
51–020 Preplanned Abatement Strategies (7–12–88)
51–025 Implementation (7–12–88)

3.3 OAR Chapter 629–43–043 Smoke Management Plan Administrative Rules (12–12–86)

4. Control Strategies for Nonattainment Areas (1–86)

4.1 Portland-Vancouver AQMA-Total Suspended Particulate (12–19–80)
4.2 Portland-Vancouver AQMA-Carbon Monoxide (7–16–82)
4.3 Portland-Vancouver AQMA-Ozone (7–16–82)
4.4 Salem Nonattainment Area-Carbon Monoxide (7–79)
4.5 Salem Nonattainment Area-Ozone (9–19–80)
4.6 Eugene-Springfield AQMA-Total Suspended Particulate (1–30–81)
4.7 Eugene-Springfield AQMA-Carbon Monoxide (6–20–79)
4.8 Medford-Ashland AQMA-Ozone (1–85)
4.9 Medford-Ashland AQMA-Carbon Monoxide (8–82)
4.10 Medford-Ashland AQMA-Particulate Matter (4–83)
4.11 Grants Pass Nonattainment-Carbon Monoxide (10–84)

5. Control Strategies for Attainment and Nonattainment Areas (1–86)

5.1 Statewide Control Strategies for Lead (1–83)
5.2 Visibility Protection Plan (10–24–86)
5.3 Prevention of Significant Deterioration (1–86)

6. Ambient Air Quality Monitoring Program

6.1 Air Monitoring Network (1–86)
6.2 Data Handling and Analysis Procedures (1–86)
6.3 Episode Monitoring (1–86)

7. Emergency Action Plan (1–86)

8. Public Involvement (1–86)

9. Plan Revisions and Reporting (1–86)

VOLUME 3—APPENDICES

Statewide Regulatory Provisions and Administration (Appendix A)

Directive 1–4–1–601 Operational Guidance for the Oregon SmokeManagement Program/Slash Burning Smoke Management Plan (App. A1)
Field Burning Smoke Management Plan (App. A2)
Interagency Memoranda of Understanding Lead Agency Designations (App. A3)
Source Sampling Manual (App. A4)
Air Quality Monitoring Quality Assurance Procedures Manual (App. A5)
Continuous Monitoring Manual (App. A6)

Control Strategies for Nonattainment Areas (Appendix B)

Portland-Vancouver AQMA (App. B1)

Legal Definition of TSP Nonattainment Area Boundaries (App. B1–1)
Carbon Monoxide Monitoring Program (App. B1–2)
Carbon Monoxide Emission Inventories (App. B1–3)
Volatile Organic Compound Emission Inventories (App. B1–4)
Input Factors Used to Develop Motor Vehicle EI's (App. B1–5)

Salem Nonattainment Area (App. B2)

Study Area (App. B2–1)
Emission Inventories (App. B2–2)
Existing Programs and Plans (App. B2–3)
Carbon Monoxide Analysis (App. B2–4)

Eugene-Springfield AQMA (App. B3)

Unpaved Road Dust Inventory (App. B3–1)
Phase II Work Plans (App. B3–2)

Medford-Ashland AQMA (App. B4)

Legal Description of the Medford-Ashland AQMA (App. B4–1)
Documentation of Ozone Standard Attainment Projection (App. B4–2)
Air Quality Work Plan (App. B4–3)
Volatile Organic Compound Emissions Inventory (App. B4–4)
Carbon Monoxide Emission Inventory (App. B4–5)
Reasonably Available Transportation Measures (App. B4–6)
Description of the Projected TSP Nonattainment Area (App. B4–7)
Attainment Dates for Newly Designated Nonattainment Areas (App. B4–8)

Statewide Control Strategies (Appendix C)

Lead (App. C1)
Lead Emission Inventories for Portland-Vancouver AQMA (App. C1–1)

[59 FR 25334, May 16, 1994, as amended at 60 FR 2692, Jan. 11, 1995]

§§ 52.1978—52.1981 [Reserved]

§ 52.1982 Control strategy: Ozone.

(a) Part D—Approval. (1) The Salem/Portland and Medford/Ashland area attainment plans are approved as satisfying Part D requirements with the following clarification as to their implementation:

(i) DEQ source test method 24 will be used in conjunction with method 25 for determining compliance of surface coating operations.

(ii) The phrase ''in most cases'' in rule OAR 340–22–107(1) applies to approximately 1,200 gasoline service stations where compliance is determined by observing whether specific emission control equipment, selected from a specific list on file at DEQ, is in place and operating properly.

[46 FR 54940, Nov. 5, 1981]

§§ 52.1983—52.1984 [Reserved]

§ 52.1985 Rules and regulations.

(a) *Part D—Approval.* The Oregon VOC regulations (OAR 340–22–100 through 220) covering Groups I and II Control Technique Guidelines are approved with the following clarifications:

(1) The paper coating rule is RACT. Due to enforceability questions introduced by the last sentence of OAR 340–22–170(5) EPA is approving this rule with the exception of the last sentence.

(2) EPA approval of OAR 340–22–170(5) is with the understanding that DEQ source test method 24 will be used to determine compliance.

(3) EPA approval of OAR 340–22–170(5) is with the understanding that compliance determinations will be based on methods approved as part of the SIP.

[46 FR 54940, Nov. 5, 1981, as amended at 47 FR 10534, Mar. 11, 1982; 52 FR 32012, Aug. 25, 1987; 54 FR 8539, Mar. 1, 1989]

§ 52.1986 [Reserved]

§ 52.1987 Significant deterioration of air quality.

(a) The Oregon Department of Environmental Quality rules for prevention of significant deterioration of air quality (OAR 340–20–220 through 270; OAR 340–20–340 and 345; and OAR 340–31–100, 105 subsections (12), (15) and (16), 110, 115, 120 and 130) are approved as meeting the requirements of part C.

(b) The Lane Regional Air Pollution Authority rules for permitting new and modified major stationary sources (Title 38 New Source Review) are approved, in conjunction with the Oregon Department of Environmental Quality rules, in order for the Lane Regional Air Pollution Authority to issue prevention of significant deterioration permits within Lane County.

(c) The requirements of sections 160 through 165 of the Clean Air Act are not met for Indian reservations since the plan does not include approvable procedures for preventing the significant deterioration of air quality on Indian reservations and, therefore, the provisions of § 52.21 (b) through (w) are hereby incorporated and made part of the applicable plan for Indian reservations in the State of Oregon.

[58 FR 47391, Sept. 9, 1993]

§ 52.1988 Air contaminant discharge permits.

(a) Emission limitations and other provisions contained in Air Contaminant Discharge Permits issued by the State in accordance with the provisions of the federally-approved Air Contaminant Discharge Permit Rules (OAR 340–20–140 through 185), New Source Review Rules (OAR 340–20–220

through 276), Stack Heights and Dispersion Techniques Rules (OAR 340–20–37), and Plant Site Emission Limit Rules (OAR 340–20–300 through 320), except Alternative Emission Limits (Bubble) for sulfur dioxide or total suspended particulates which involve trades were the sum of the increases in emissions exceeds 100 tons per year, shall be the applicable requirements of the federally-approved Oregon SIP (in lieu of any other provisions) for the purposes of section 113 of the Clean Air Act and shall be enforceable by EPA and by any person in the same manner as other requirements of the SIP.

(b) Emission limitations and other provisions contained in Air Contaminant Discharge Permits issued by the Lane Regional Air Pollution Authority in accordance with the provisions of the federally-approved Air Contaminant Discharge Permits rule (Title 34) and Plant Site Emission Limit rules (Title 32, Section 32–100 through 104) and in conjunction with the federally-approved Oregon Department of Environmental Quality rules, except alternative emission limits (bubbles) for sulfur dioxide or total suspended particulates which involve trades where the sum of the increases in emissions exceeds 100 tons per year, shall be the applicable requirements of the federally-approved Oregon SIP (in lieu of any other provisions) for the purposes of section 113 of the Clean Air Act and shall be enforceable by EPA and by any person in the same manner as other requirements of the SIP.

[49 FR 36844, Sept. 20, 1984, as amended at 53 FR 1020, Jan. 15, 1988; 58 FR 47391, Sept. 9, 1993]

Subpart NN—Pennsylvania

§ 52.2020 Identification of plan.

(a) Title of plan: ''Pennsylvania's Implementation Plan.''

(b) The plan was officially submitted on January 27, 1972.

(c) The plan revisions listed below were submitted on the dates specified.

(1) Regulations 121, 123, 127, 129, 131, 135, 137, 139, and 141 of the Pennsylvania Code of Regulations submitted March 17, 1972, by the Pennsylvania Department of Environmental Resources.

(2) Air Quality Data for three additional months regarding Reading Air Basin SO_2 strategy submitted March 27, 1972, by the Pennsylvania Department of Environmental Resources.

(3) Miscellaneous non-regulatory additions and clarifications to the plan submitted on May 4, 1972, by the Pennsylvania Department of Environmental Resources.

(4) ''An Implementation Plan for the Attainment and Maintenance of the National Ambient Air Quality Standards for Allegheny County, Commonwealth of Pennsylvania, 1980'', and Article XX (which replaces Article XVIII), which were submitted on December 24, 1980.

(5) Non-regulatory additions to plan regarding Allegheny County Source Surveillance regulations submitted on June 20, 1972, by the Pennsylvania Department of Environmental Resources.

(6) Miscellaneous non-regulatory additions to the plan submitted August 14, 1972, by the Pennsylvania Department of Environmental Resources.

(7) Revision to Philadelphia Air Management Services regulations submitted November 3, 1972, by the Governor.

(8) Revision to compliance schedules for Clairton Coke Works in Allegheny County submitted December 14, 1972, by the Governor.

(9) Transportation Control Plan for Southwest Pennsylvania and Metropolitan Philadelphia AQCR's submitted April 13, 1973, by the Governor.

(10) [Reserved]

(11) Amendments to Philadelphia Air Management Services regulation number 3 submitted April 15, 1974, by the Governor.

(12) Amendments to Philadelphia Air Management Services regulations numbers 1, 2 and 11 submitted May 28, 1974, by the Governor.

(13) Process factor for glass production furnaces submitted on December 26, 1974, by the Pennsylvania Department of Environmental Resources.

(14) Amendments to Chapters 123 (section 123.24) and 139 (section 139.13), controlling zinc smelter operations; submitted on August 7, 1975 by the Pennsylvania Department of Environmental Resources.

(15) A revision submitted by the Commonwealth of Pennsylvania on August

11, 1976 amending Title 3 of the Philadelphia Code, Subsection 3–103, Enforcement; Subsection 3–301, Powers and Duties of the Department of Public Health; and Subsection 3–305 Orders.

(16) Revisions submitted by the Commonwealth of Pennsylvania on December 11, 1972 amending regulations for the powers and duties of the Department of Environmental Resources, the Environmental Quality Board and the Environmental Hearing Board.

(17) Amendment to Article XVIII, Rules and Regulations of the Allegheny County Health Department, Sections 1800 (Definitions) and 1813 (Air Pollution Emergency Episode Regulations). These amendments were submitted on May 15, 1978 by the Department of Environmental Resources.

(18) Amendments to Title 3, Section 3–207 (Sale of Fuel Oil) of the Philadelphia Code pertaining to Philadelphia County and to Title 25, Part I, Subpart C, Article III, Chapter 121 (Definitions) and Chapter 123 (Standards for Contaminants, Sulfur Compound Emissions) of the Pennsylvania Code pertaining to Bucks, Chester, Delaware, and Montgomery Counties submitted on July 31, 1978 by the Governor.

(19) Amendments to Chapters 121 (§ 121.1), 123 (§§ 123.1, 123.13, 123.44), 127 (§§ 127.41 through 127.52, inclusive), 129 (§§ 129.15 and 129.16), and 139 (§§ 139.51, 139.52, 139.53 and 139.61), dealing with the control of coke oven battery operations; submitted on June 30, 1978 by the Pennsylvania Department of Environmental Resources.

(20) Amendments to Chapters 121 (§ 121.1), 123 (§§ 123.22(b) and 123.45), and 139 (§§ 139.3, 139.4, 139.13, 139.16, 139.101, 139.102, 139.103, 139.104 and 139.105), dealing with sulfur dioxide emissions from fuel-burning installations, only as they apply to sources in the Erie air basin; submitted on April 24, 1979 by Governor Thornburgh.

(21) A revision submitted by the Commonwealth of Pennsylvania on September 20, 1978 to clarify terms and intent of Chapter 121 (relating to general provisions), Chapter 123 (relating to standards for contaminants) and Chapter 129 (relating to standards for sources).

(22) The ''1979 State Implementation Plan (SIP) Submission for the Attainment of the Photochemical Oxidant Standard in Pennsylvania'' and ''Regulations for Volatile Organic Compounds'' amending Chapters 121, 129, and 139 of the Pennsylvania Code submitted on April 24, 1979, by the Governor.

(23) Transportation elements of the SIP for Philadelphia, Pittsburgh, Allentown-Bethlehem-Easton, and Scranton areas and commitment to implement vehicle inspection and maintenance in Lehigh and Northampton Counties submitted on June 7, 1979, by the Governor.

(24) Transportation element of the SIP for the Wilkes-Barre area submitted on June 8, 1979, by the Secretary of the Pennsylvania Department of Environmental Resources.

(25) Total Suspended Particulate, State Implementation Plan for Pennsylvania, submitted on June 12, 1979, by the Secretary of the Pennsylvania Department of Environmental Resources.

(26) Special Permit Requirements for Sources Locating in or Significantly Impacting Nonattainment Areas and a revision of Sampling and Testing methods for total suspended particulate amending Chapters 121, 127, and 139 of the Pennsylvania Code submitted on June 12, 1979, by the Secretary of the Pennsylvania Department of Environmental Resources.

(27) Transportation element for the Harrisburg area submitted on June 13, 1979, by the Secretary of the Pennsylvania Department of Environmental Resources.

(28) Allegheny County Volatile Organic Compound Regulations amending Chapters I, II, and V of Allegheny County Regulations submitted on June 13, 1979, by the Secretary of the Pennsylvania Department of Environmental Resources.

(29) Documentation of the status of transportation/air quality measures in a letter of August 20, 1979 from the Lackawanna County Planning Commission.

(30) Information from the Southwestern Pennsylvania Regional Planning Commission of September 17, 1979 on the calculation of emission estimates and the status of certain transportation measures.

(31) Reclassification of several transportation measures in the transportation/air quality study for the Allentown-Bethlehem-Easton area, submitted by the Commonwealth on November 19, 1979.

(32) Substantiation of TSP planning and attainment schedules submitted by the Commonwealth on November 28, 1979.

(33) A revision submitted by the Commonwealth of Pennsylvania on August 11, 1976 consisting of an amendment to the Pennsylvania Air Resources Regulations, Chapter 129, Standards for Sources, which relates to open burning.

(34) A revision was submitted by the Commonwealth of Pennsylvania on January 25, 1980, which is intended to establish an Ambient Air Quality Monitoring Network for the Commonwealth of Pennsylvania and the City of Philadelphia.

(35) Amendments to the Pennsylvania Air Resources Regulations, consisting of the addition of regulations for alternative emission reduction limitations (Sections 128.11 through 128.13 for Andre Greenhouses, Inc., and Section 128.14 for the 3M Co.), submitted on April 16, 1981.

(36) A revision submitted by the Commonwealth of Pennyslvania on April 9, 1981 providing for attainment of the SO_2 NAAQS in portions of Armstrong County, Pennsylvania.

(37) A revision submitted by the Commonwealth of Pennsylvania on June 5, 1980, consisting of amendments to Philadelphia's Air Management Regulations II and III, allowing a limiting resumption of industrial coal burning.

(38) A revision submitted by the Commonwealth of Pennsylvania on December 24, 1980 which is intended to establish an Ambient Air Quality Monitoring Network for Allegheny County.

(39) Amendments consisting of minor regulatory changes to Article III of the Pennsylvania Rules and Regulations for Air Resources governing Volatile Organic Compounds (VOC) emissions was submitted by the Commonwealth of Pennsylvania on December 16, 1980.

(40) A revision submitted by the Commonwealth of Pennsylvania on November 10, 1980 dividing the Beaver Valley Air Basin into an Upper Beaver Valley Air Basin and Lower Beaver Valley Air Basin and revising chapters 121 and 123.

(41) Revisions submitted by the Commonwealth of Pennsylvania on April 13, 1981, July 13, 1981 and August 17, 1981 to correct the conditionally approved and unapproved portions of Pennsylvania 1979 State Implementation Plan.

(42) A document entitled ''Attainment Demonstration for Total Suspended Particulate in Nonattainment Area #3, Based Upon Alternate Emission Reduction Plan for Shenango, Inc.'' in Allegheny County, including the new section 902 of Article XX, submitted by the Commonwealth of Pennsylvania on May 18, 1981.

(43) Amendments to Air Management Regulations II and III, with supporting documents, submitted by Governor Dick Thornburgh on December 8, 1981, allowing the continued burning of anthracite coal in existing space heating units currently burning coal.

(44) [Reserved]

(45) Revisions submitted to the Commonwealth of Pennsylvania on February 23, 1982 to correct the conditionally-approved portions of the 1979 State Implementation Plan, specifically the two asphalt regulations in Allegheny County.

(46) A revision submitted by the Acting Secretary of the Pennsylvania Department of Environmental Resources on December 9, 1981, which would add an expanded ridesharing program in the Delaware Valley.

(47) Revisions submitted on July 27, 1981, August 12, 1981, and September 15, 1981, by the Pennsylvania Department of Environmental Resources (DER), which will limit the automobile emission Inspection and Maintenance Program to the urbanized areas of the Pittsburgh and Allentown-Bethlehem-Easton regions.

(48) Volatile Organic Compound (VOC) regulations, a generic VOC bubble regulation, Continuous Emission Monitoring (CEM) regulations and procedures, and Alternative Opacity Limit regulations submitted by Pennsylvania to EPA on July 13, 1981, August 17, 1981, August 26, 1981, and September 4, 1981.

(49) Group IIVOC regulations, a revision of the Air Episode Regulations,

and an increase in Permit Fees, for Allegheny County, Pa. These revisions were submitted by Secretary Peter S. Duncan on February 23, 1982.

(50) Regulations and supporting documents implementing an SO_2 bubble plan for the U.S. Steel Homestead and Edgar Thomson Works in Allegheny County, PA. submitted by DER Secretary Peter S. Duncan on September 16, 1982.

(51) Regulations and supporting documents implementing a TSP bubble plan for U.S. Steel Corporation's Fairless Works in Fairless Hills, PA., submitted by the Secretary of the Pennsylvania Department of Environmental Resources on January 6, 1983.

(52) Regulations and supporting documents implementing a TSP bubble plan for Bethlehem Steel Corporation's plant in Bethlehem, Pa., submitted by the Secretary of the Pennsylvania Department of Environmental Resources on December 30, 1982.

(53) Pennsylvania submittal dated September 23, 1982 deleting more stringent sulfur in residual oil requirements for the Upper Beaver Valley Air Basin which would have become effective August 1, 1982 and adding provisions for public notification of air quality levels.

(54) Revisions submitted by the Commonwealth of Pennsylvania on June 8, 1982 consisting of alternative emission reduction plans for Scott Paper Company in Chester, PA, Arbogast and Bastian, Inc., in Allentown, PA, and J. H. Thompson, Inc., in Kennett Square, PA.

(55) Regulations and supporting documents implementing an SO_2 bubble plan for U.S. Steel Corporation's Fairless Works in Fairless Hills, PA was submitted by the Secretary of the Pennsylvania Department of Environmental Resources on July 7, 1983.

(56) A State Implementation Plan for the control of lead (Pb) emissions submitted on September 30, 1982 by the Secretary of Environmental Resources.

(57) A revision submitted by the Commonwealth of Pennsylvania on July 28, 1983, and clarified by letters dated October 28, 1983, February 7, 1984 and June 15, 1984 enables the Commonwealth of Pennsylvania to implement and enforce the prevention of significant deterioration (PSD) regulations.

(58) Revision to Article XX of the Allegheny County SIP were submitted by the Secretary of the Pennsylvania Department of Environmental Resources on September 6, 1983.

(59) A State Implementation Plan for the control of lead (Pb) emissions in Allegheny County was submitted on September 6, 1983 by the Secretary of Environmental Resources.

(60) Amendments consisting of minor regulatory changes to Article III of the Air Resources Regulations that amend Chapters 121, 123, 127, 129, 131, 139, and 141 was submitted by the Commonwealth of Pennsylvania on September 23, 1983.

(61) A State Implementation Plan for the control of lead (Pb) emissions in Philadelphia was submitted on August 29, 1983 and May 15, 1984 by the Secretary of the Pennsylvania Department of Environmental Resources.

(62) A State Implementation Plan for the control of Lead (Pb) emissions in Pennsylvania was submitted on June 8, 1984 by the Secretary of the Pennsylvania Department of Environmental Resources.

(63) The 1982 Ozone and Carbon Monoxide plan, except for the Inspection and Maintenance portion and the Perchloroethylene Dry Cleaning regulation, for the Southeastern, Southwestern, and Allentown-Bethlehem-Easton areas submitted by the Commonwealth on June 30, 1982 and October 24, 1983.

(64) [Reserved]

(65) An amendment to Philadelphia Air Management's Regulation VII, submitted by the Secretary of the Pennsylvania Department of Environmental Resources on March 28, 1986. The amendment exempts fuel burning units installed before June 1, 1984, from the provisions of Regulation VII (Control of Emissions of Nitrogen Oxides from Stationary Sources).

(i) Incorporation by reference.

(A) Air Management Regulation VII, Control of Emission of Nitrogen Oxides from Stationary Sources, adopted on April 9, 1985.

(66) A revision to the Pennsylvania State Implementation Plan adopting a Motor Vehicle Emissions Inspection and Maintenance Program submitted by the Secretary of the Pennsylvania

Department of Environmental Resources on June 24, 1985 and an amendment submitted March 13, 1986 by the Chief, Division of Air Resource Management, Bureau of Air Quality Control, Pennsylvania Department of Environmental Resources.

(i) Incorporation by reference.

(A) Title 75, sections 4703 (a) and (h) and 4706 of the Purdon's Pennsylvania Consolidated Statutes Annotated and Title 67, Pennsylvania Code sections 175.41, 177.21, 177.31, 177.32, 177.35, 177.39 and 177.61.

(B) Bureau of Air Quality Control, Department of Environmental Resources, State Implementation Plan, Revision for Ozone for I/M, dated June 17, 1985 and the letter to EPA, dated March 13, 1986.

(67) Amendment to section 512.G. Extensions, of Article XX, Rules and Regulations of the Allegheny County Health Department providing authority to grant compliance date extensions for surface coating and graphic arts sources, submitted by DER Secretary Nicholas DeBenedictis on August 13, 1985.

(i) Incorporation by reference.

(A) Letter of August 13, 1985 to EPA from the Pennsylvania Department of Environmental Resources, and Appendix 22, Amendment to section 512.G., Allegheny County portion of the Pennsylvania State Implementation Plan (extension of final air pollution compliance dates for surface coating and graphic arts) adopted by the Board of County Commissioners of June 27, 1985.

(68) Revision to the Pennsylvania State Implementation Plan dated February 13, 1985, which implements two VOC offset transactions between Paramount Packaging Corporation and National Can Corporation and between Fres-co Systems USA, and National Can Corporation.

(i) Incorporation by reference.

(A) Pennsylvania Department of Environmental Resources, Order for the External Transfer of Banked Emissions #85–524, signed on March 1, 1985.

(B) Pennsylvania Department of Environmental Resources, Order for the External Transfer of Banked Emissions #85–525, signed on March 1, 1985.

(C) Letter dated August 21, 1985, from the Department of Environmental Resources to the National Can Corporation.

(ii) Additional material.

(A) Narrative submittal dated February 13, 1985, from the Department of Environmental Resources to EPA.

(B) Letter dated April 25, 1986, from the Department of Environmental Resources to EPA.

(69) Revision to the Allegheny County portion of the Pennsylvania State Implementation Plan was submitted by the Commonwealth on February 3, 1987.

(i) Incorporation by reference.

(A) Amendment to the Allegheny County portion of the Pennsylvania SIP for Air Pollution Control, Appendix 23, section 533, Abrasive Blasting, approved on October 9, 1986.

(B) Letter dated February 3, 1987, from the Commonwealth of Pennsylvania to EPA.

(70) Revisions to the Philadelphia Regulations incorporating stack height regulations, submitted by Pennsylvania on June 2, 1986.

(i) Incorporation by reference. (A) Amendment to Philadelphia, Pennsylvania, Air Management Regulation I, Section XI, ''Compliance with Federal Regulations'', effective on March 27, 1986.

(71) The permit incorporating polymer resin processes RACT requirements for ARCO's Monaca plant, submitted by acting DER Secretary John Krill on January 14, 1987.

(i) Incorporation by reference.

(A) The entire permit (No. 04–313–052) and plan approval; issued and effective December 9, 1986.

(72) The permit incorporating SOCMI air oxidation RACT requirements for IMC's Allentown plant, submitted by acting DER Secretary John Krill on January 14, 1987.

(i) Incorporation by reference.

(A) The entire permit (No. 39–313–014) and plan approval; issued and effective December 10, 1986.

(73) Good engineering practice stack height regulations were submitted by the Secretary, Pennsylvania Department of Environmental Resources on July 19, 1988.

(i) Incorporation by reference.

(A) Letter from the Pennsylvania Department of Environmental Resources

dated July 19, 1988, submitting a revision to the Pennsylvania State Implementation Plan.

(B) Amendments to Pennsylvania regulations, title 25, part I, subpart C, article III; chapters 121 (definitions) and 141 (variances and alternate standards) adopted May 14, 1988.

(ii) Additional materials.

(A) Remainder of the State submittal including the letter of commitment dated March 11, 1986, from the Department of Environmental Protection stating that new source review shall be conducted in accordance with the good engineering practice requirements of 40 CFR part 51.

(74) Revisions to the State Implementation Plan submitted by the Pennsylvania Department of Environmental Resources on January 11, 1991.

(1) *Incorporation by reference.* (A) Letter from the Pennsylvania Department of Environmental Resources dated January 11, 1991 submitting a revision to the Pennsylvania State Implementation Plan.

(B) Amendment to 25 Pa. Code Chapter 123.51 ''Monitoring Requirements'', concerning continuous nitrogen oxides monitoring, effective October 20, 1990.

(ii) *Additional materials.* (A) Remainder of the State Implementation Plan revision request submitted by the Pennsylvania Department of Environmental Resources on January 11, 1991.

(75) Revisions to the State Implementation Plan submitted by the Pennsylvania Department of Environmental Resources on January 8, 1991.

(i) *Incorporation by reference.* (A) Letter from the Pennsylvania Department of Environmental Resources dated January 8, 1991 submitting a revision to the Pennsylvania State Implementation Plan.

(B) Revisions to Pennsylvania Department of Environmental Resources' Air Quality Regulations, §137.3, subsections (2), (3), (4), and introductory paragraph, effective June 9, 1990.

(ii) *Additional materials.* (A) Remainder of State submittal, dated January 8, 1991.

(76) Revisions to the State Implementation Plan (SIP) submitted by the Pennsylvania Department of Environmental Resources (PADER) on January 11, 1991.

(i) Incorporation by reference.

(A) A letter from PADER dated January 11, 1991 submitting a revision to the Pennsylvania SIP.

(B) Title 25 PA. Code, Chapter 121, Section 121.1—Definition of VOC.

(77) Revision to the State Implementation Plan submitted by the Pennsylvania Department of Environmental Resources on February 23, 1987, at the request of Philadelphia Air Management Services.

(i) Incorporation by reference.

(A) Letter from the Pennsylvania Department of Environmental Resources dated February 23, 1987, submitting a revision to the Philadelphia portion of the Pennsylvania Ozone State Implementation Plan.

(B) Regulation V, Section I, ''Definitions'' for the terms Petroleum Solvents and Petroleum Solvent Dry Cleaning; and Section XI, ''Petroleum Solvent Dry Cleaning'' effective November 28, 1986.

(C) Compliance Guidelines, for Air Management Regulation V, ''Control of Emission of Organic Substances from Stationary Sources,'' Section XI: Petroleum Solvent Dry Cleaning'' effective November 28, 1986 (containing amendments and revisions through February 29, 1988).

(78) Revisions to the State Implementation Plan submitted by the Pennsylvania Department of Environmental Resources on September 9, 1991. The effective date of the regulation submitted is May 23, 1988.

(i) *Incorporation by reference.* (A) A letter from the Pennsylvania Department of Environmental Resources dated September 9, 1991 submitting a revision to the Pennsylvania State Implementation Plan.

(B) Section XIII, Process Equipment Leaks of Philadelphia Air Management Regulation V—Control of Emissions of Organic Substances from Stationary Sources. The effective date of the regulation submitted is May 23, 1988.

(C) Compliance Guidelines for Philadelphia Air Management Regulation V, Section XIII. The effective date of the compliance guidelines submitted is May 23, 1988.

(ii) *Additional materials.* (A) Remainder of the May 23, 1988 State submittal.

(79) Revisions to the State Implementation Plan submitted by the Pennsylvania Department of Environmental Resources on August 15, 1991.

(i) Incorporation by reference.

(A) Letter from the Pennsylvania Department of Environmental Resources dated August 15, 1991 submitting revision to the Pennsylvania State Implementation Plan, pertaining to Chapters 121 and 129 of the Pennsylvania regulations pertaining to Stage I vapor recovery, surface coating, graphic arts, deletion of the generic bubble regulation, recordkeeping, gasoline marketing, pharmaceutical products, and compliance schedules.

(B) The definitions of bulk gasoline plant, bulk gasoline terminal, clear coat, and miscellaneous metal parts and products found in Chapter 121.1, Chapter 129.51 (a) (1) through (6), (b), and (c), Chapter 129.52 (a) through (e), Table I, 10.(a) topcoats for locomotives and heavy-duty trucks and 10.(b) hopper cars and tank car interiors, deletion of Chapter 129.53 (now reserved), Chapter 129.54, Chapter 129.59, Chapter 129.60, Chapter 129.61, Chapter 129.66, Chapter 129.67, and Chapter 129.68 published in the Pennsylvania Bulletin dated August 3, 1991 (Vol. 21, no. 31, pages 3406–3416). These regulations were made effective on August 3, 1991.

(80) Revision to the Allegheny County portion of the Pennsylvania State Implementation Plan submitted on July 13, 1987, which consists of the addition of an installation permit (86–I–0024–P) which defines and imposes RACT to control VOC emissions from air oxidation processes at the Aristech Chemical Corporation plant on Neville Island.

(i) Incorporation by reference.

(A) A letter from the Pennsylvania Department of Environmental Resources dated July 13, 1987, submitting revisions to the Allegheny County portion of the Pennsylvania ozone State Implementation Plan.

(B) The original permit (86–I–0024–P), issued and effective August 28, 1986, and the modification and amendments to the original permit, issued and effective March 3, 1987.

(81) Revisions to the State Implementation Plan submitted by the Pennsylvania Department of Environmental Resources on January 11, 1991.

(i) Incorporation by reference.

(A) Letter from the Pennsylvania Department of Environmental Resources dated January 11, 1991 submitting a revision to the Pennsylvania State Implementation Plan.

(B) The following revised regulations, effective October 27, 1990: Sections 121.1 (Definitions of ''combustion efficiency,'' ''incinerator,'' ''municipal waste,'' ''municipal waste incinerator,'' and ''resource recovery unit'' only); 123.25 (b), (c), and (e); 129.18 (entire section); 139.101 (7), (16) and introductory paragraph; 139.103(2); 139.104(2); 139.111 (1), (2), (3).

(ii) Additional material.

(A) Remainder of the January 11, 1991 State submittal.

(82) Revision to the State Implementation Plan submitted by the Pennsylvania Department of Environmental Resources on February 23, 1987 at the request of Philadelphia Air Management Services.

(i) *Incorporated by reference.* (A) Letter from the Pennsylvania Department of Environmental Resources dated February 23, 1987 submitting a revision to the Philadelphia portion of the Pennsylvania Ozone State Implementation Plan effective November 28, 1986.

(B) Regulation V, Section I, ''Definitions'' for the term Pharmaceutical Tablet Coating; and Section XII, ''Pharmaceutical Tablet Coating'' only.

(C) Compliance Guidelines for Air Management Regulation V, ''Control of Emissions of Organic Substances from Stationary Sources,'' Section XII: ''Pharmaceutical Tablet Coating,'' effective November 28, 1986, (containing amendments and revisions through February 29, 1988).

(83) Revisions to the State Implementation Plan submitted by the Pennsylvania Department of Environmental Resources on February 23, 1987.

(i) *Incorporation by reference.* (A) A letter from the Pennsylvania Department of Environmental Resources dated February 23, 1987 submitting a revision to the Pennsylvania State Implementation Plan.

(B) A revision to Section I—Definitions—for the term Volatile Organic

Compound (VOC) of Philadelphia Air Management Regulation V ''Control of Emissions of Organic Substances from Stationary Sources.'' The effective date is November 28, 1986.

(C) The addition of Section X—Compliance with Pennsylvania Standards for VOC to Philadelphia Air Management Regulation V. The effective date is November 28, 1986.

(ii) *Additional materials.* (A) The remainder of the Commonwealth's February 23, 1987, submittal.

(84) Revisions to the Pennsylvania Air Pollution Control Regulations submitted on November 13, 1991, by the Pennsylvania Department of Environmental Resources:

(i) Incorporation by reference.

(A) Letter of November 13, 1991, from the Pennsylvania Department of Environmental Resources transmitting revised regulations for the control of volatile organic compound (VOC) emissions.

(B) Title 25 Pa. Code, chapter 121, section 121.1 (Definition of ''Organic Liquid Cargo Vessel'' only) and chapter 129, section 129.81 (Organic Liquid Cargo Vessel Loading and Ballasting), effective September 28, 1991.

(ii) Additional material.

(A) Remainder of the November 13, 1991, State submittal.

(85) Revisions to the Pennsylvania Regulations submitted on October 16, 1991, by the Pennsylvania Department of Environmental Resources:

(i) Incorporation by reference.

(A) Letter from the Pennsylvania Department of Environmental Resources dated October 16, 1991 transmitting revisions to the Allegheny County portion of the Pennsylvania State Implementation Plan.

(B) Revisions to the following provisions of Article XX, Rules and Regulations of the Allegheny County Health Department, Air Pollution Control, adopted on August 8, 1991, and effective August 26, 1991:

(*1*) Section 101–Added definitions for the following terms: capture efficiency, potential uncontrolled emission rate, and transfer efficiency; revised and renumbered definitions for the following terms: bulk gasoline plant, bulk gasoline terminal, clear coat, miscellaneous metal parts and products, and volatile organic compound (VOC).

(*2*) New Section 501 added; existing Section 510 deleted.

(*3*) Section 504 (entire section).

(*4*) Section 505, subsections A, B, and D, and Table I.

(*5*) Section 507, subsection B.

(*6*) Section 508, subsections C, D, E, G, and H.

(*7*) Section 512–New subsection A (added), subsection B (former subsection H); existing subsections A–G and I are deleted.

(*8*) Section 531, subsections A, B, and C.

(*9*) Section 534, subsections B and C.

(*10*) Deletion of Section 506 that was in effect before August 26, 1991.

(86) Revisions to the Pennsylvania Regulations for reasonably available control technology (RACT) to control fugitive organic chemical manufacturing industries, Article XX of the Rules and Regulations of the Allegheny County Health Department, section 534 and 605 I submitted on July 13, 1987, by the Pennsylvania Department of Environmental Resources (DER).

(i) Incorporation by reference.

(A) Letter of July 13, 1987, from the Pennsylvania Department of Environmental Resources transmitting regulations for the control of ''Synthetic Organic Chemical and Polymer Manufacturing-Fugitive Sources'' and the associated test method, EPA method 21.

(B) Article XX, of the Rules and Regulations of the Allegheny County Health Department, section 534 and 605 I, effective June 10, 1987.

(87) Revisions to the Pennsylvania State Implementation Plan submitted on March 29, 1993, by the Pennsylvania Department of Environmental Resources:

(i) Incorporation by reference.

(A) Letter of March 22, 1993, from the Pennsylvania Department of Environmental Resources transmitting plan approval no. 46–326–001A and operating permit no. 46–326–001A for Knoll Group, P.O. Box 157, East Greenville, PA.

(B) Plan approval no. 46–326–001A and operating permit no. 46–326–001A which consist of emission standards, operating conditions and recordkeeping requirements applicable to Knoll Group, a wood furniture surface coater located

in Montgomery County, PA, which is in the Philadelphia severe ozone nonattainment area. These requirements together are being approved as reasonably available control technology (RACT) for this wood furniture surface coater. The effective date of the plan approval and the operating permit is March 24, 1993.

(ii) Additional material.

(A) Remainder of March 29, 1993, Pennsylvania submittal consisting of a Background Information document prepared by Pennsylvania in support of the RACT proposal for Knoll, an evaluation of control options performed for Knoll by a contractor, public comments and responses, and a chart and computer diskette (LOTUS 1–2–3) showing how RACT calculations will be performed.

(88) Revisions to the Pennsylvania Regulations for an oxygenated gasoline program submitted on November 12, 1992 by the Pennsylvania Department of Environmental Resources:

(i) Incorporation by reference.

(A) Letter of November 12, 1992 from the Pennsylvania Department of Environmental Resources transmitting the oxygenated gasoline regulation as a SIP revision.

(B) Revisions to 25 PA Code Chapter 121, General Provisions, section 121.1 Definitions and the addition of section 126.1 Oxygenate Content of Gasoline to 25 PA Code Chapter 126, Standards for Motor Fuels. These revisions became effective August 29, 1992.

(C) The correction in 25 PA Code Chapter 121, General Provisions, section 121.1 Definitions in the definition of ''oxygenated gasoline''. This correction became effective October 24, 1992.

(ii) Additional Material.

(A) Remainder of Pennsylvania State submittal.

(B) [Reserved]

(89) Revisions to the Pennsylvania Regulations, Chapter 129.82 pertaining to Stage II Vapor Recovery and the associated definition of gasoline dispensing facilities in Chapter 121.1 submitted on March 4, 1992, by the Pennsylvania Department of Environmental Resources:

(i) Incorporation by reference.

(A) Letter of March 4, 1992, from the Pennsylvania Department of Environmental Resources transmitting Chapter 121.1, definition of gasoline dispensing facilities, and Chapter 129.82 pertaining to regulations for Stage II vapor recovery in moderate, serious and severe ozone nonattainment areas in the Commonwealth.

(B) Pennsylvania Bulletin (Vol. 22, No. 8) dated February 8, 1992, containing the definition of gasoline dispensing facility in Chapter 121.1 and the Stage II vapor recovery regulations contained in Chapter 129.82, effective on February 8, 1992.

(ii) Additional material.

(A) Remainder of March 4, 1992, State submittal.

(90) Revisions to the Allegheny County portion of the Pennsylvania SIP to adopt the PM–10 NAAQS and fulfill other Group III requirements, submitted on November 8, 1988 by the Pennsylvania Department of Environmental Resources:

(i) Incorporation by reference.

(A) Letter of November 8, 1988 from the Pennsylvania Department of Environmental Resources transmitting revisions to Article XX of Allegheny County Health Department Rules and Regulations.

(B) Revisions to the following sections of Article XX of Allegheny County Health Department Rules and Regulations, effective August 22, 1988:

(*1*) Section 101, Definitions (definition of ''PM10'').

(*2*) Section 109, Ambient Air Quality Standards.

(*3*) Section 527, Areas Subject to Sections 521 through 526 (various fugitive dust measures).

(*4*) Section 613, Ambient Measurements.

(*5*) Section 704, Episode Criteria.

(*6*) Section 801, Definitions. (Definitions of ''Attainment area,'' ''Nonattainment area,'' ''Significant air quality impact,'' and ''Unclassified area'')

(*7*) Appendix 1, Attainment, Unclassifiable and Nonattainment Areas of Allegheny County: deleted.

(ii) Additional material.

(A) Remainder of the November 8, 1988 submittal pertaining to the Allegheny County portion of the Pennsylvania SIP to adopt the PM–10

NAAQS and fulfill other Group III requirements.

(91) Revisions to the Allegheny County portion of the Pennsylvania SIP to reduce PM–10 emissions and visible emissions from several categories of fugitive dust sources, submitted on December 31, 1992 by the Pennsylvania Department of Environmental Resources:

(i) Incorporation by reference.

(A) Letter of December 31 1992 from the Pennsylvania Department of Environmental Resources transmitting revisions to Article XX of Allegheny county Health Department Rules and Regulations.

(B) Revisions to the following sections of Article XX of Allegheny County Health Department Rules and Regulations, effective November 1, 1992.

(*1*) Section 402, Particulate Mass Emissions (Paragraph A—Fuel Burning or Combustion Equipment)

(*2*) Section 520, Coke Ovens (Paragraph J—Compliance Schedule)

(*3*) Section 521, Permit Source Premises.

(*4*) Section 521.1, Non-Permit Source Premises.

(*5*) Section 523, Permit Source Transport.

(*6*) Section 523.1, Non-Permit Source Transport.

(*7*) Section 524, Construction and Land Clearing.

(*8*) Section 527, Areas Subject to Sections 521 through 526.

(*9*) Section 602, Particulate Matter (test methods).

(*10*) Section 606, Visible Emissions (measurement).

(*11*) Section 607, Coke Oven Emissions (measurement).

(*12*) Section 608, Coke Oven Gas (measurement of hydrogen sulfide content).

(ii) Additional material.

(A) Remainder of the December 31, 1992 submittal pertaining to the Allegheny County portion of the Pennsylvania SIP to reduce PM–10 emissions and visible emissions from several categories of fugitive dust sources.

(92) Revisions to the Allegheny County portion of the Pennsylvania SIP to reduce PM–10 emissions including the newly created Allegheny County Article XXI which both revised and added emission reduction requirements for certain industrial boilers, various emission points at US Steel's Clairton Coke Works and the Glassport Transportation Center, new definitions related to coke oven gas emissions, and new test methods for particulate matter; submitted by the Pennsylvania Department of Environmental Resources on January 6, 1994 and effective February 1, 1994.

(i) Incorporation by reference.

(A) Letter of January 6, 1994 from the Pennsylvania Department of Environmental Resources transmitting Article XXI of Allegheny County Health Department Rules and Regulations.

(B) The newly created Article XXI of Allegheny County Health Department Rules and Regulations in its entirety, effective February 1, 1994.

(*1*) Part A (sections 2101 *et seq.*), General, reserved in part:

(i) Section 2101. Short Titles.

(ii) Section 2101.3, Effective Date and Repealer.

(iii) Section 2101.20, Definitions.

(*2*) Part B (sections 2102 *et seq.*), Installation Permits, reserved.

(*3*) Part C (sections 2103 *et seq.*), Operating Permits and Licenses, reserved.

(*4*) Part D (sections 2104 *et seq.*), Pollutant Emission Standards, reserved in part.

(*i*) Section 2104.6, Particulate Mass Emissions, replaces section 402 of Article XX.

(*5*) Part E (sections 2105 *et seq.*), Sources Emission and Operating Standards, reserved in part.

(*i*) Section 2105.21, Coke Ovens and Coke Oven Gas, replaces section 520.B. through 520.J. and section 530 of Article XX.

(*ii*) Section 2105.49, Fugitive Emissions, replaces section 528 of Article XX.

(*6*) Part F (sections 2106 *et seq.*), Air Pollution Episodes, reserved.

(*7*) Part G (sections 2107 *et seq.*), Methods, reserved in part:

(*i*) Section 2107.1, General.

(*ii*) Section 2107.2, Particulate Matter.

(*8*) Part H (sections 2108 *et seq.*), Compliance, reserved.

(*9*) Part I (sections 2109 *et seq.*), Enforcement, reserved.

(ii) Additional material.

(A) Remainder of the January 6, 1994 State submittal.

(93) [Reserved]

(94) Revision to the Commonwealth of Pennsylvania Volatile Organic Compound (VOC) Regulations, amending 25 Pa Code Chapters 121—General Provisions and Chapter 129—Standards for Sources submitted on August 19, 1992, by the Pennsylvania Department of Environmental Resources (PADER).

(i) Incorporation by reference.

(A) A letter of August 19, 1992, from PADER transmitting a state implementation plan revision which corrects deficiencies and adds requirements for the control of VOCs from surface coating, pneumatic rubber tire manufacturing, graphic arts and synthetic organic chemical manufacturing industry equipment leaks.

(B) 25 Pa Code, Chapter 121, § 121.4; and 25 Pa Code, Chapter 129, §§ 129.51, 129.52, 129.62, 129.66, 129.67, 129.69, 129.71 and 129.72, submitted on August 19, 1992 and effective on May 23, 1992.

(95) [Reserved]

(96) Revisions to the Commonwealth of Pennsylvania Regulations State Implementation Plan submitted on November 12, 1992 by the Pennsylvania Department of Environmental Resources:

(i) Incorporation by reference.

(A) Letter of November 12, 1992 from the Pennsylvania Department of Environmental Resources transmitting a revised regulation to establish emission statements requirements annually for sources of nitrogen oxides and volatile organic compounds.

(B) Revisions to amend 25 Pa. Code, specifically to include section 135.5 and section 135.21. Effective on October 10, 1992.

(97) Revisions to the Pennsylvania State Implementation Plan submitted by the Secretary, Pennsylvania Department of Environmental Protection on December 31, 1992.

(i) Incorporation by reference.

(A) Letter dated December 31, 1992 from the Secretary, Pennsylvania Department of Environmental Protection, submitting a revision to the Allegheny County portion of the Pennsylvania State Implementation Plan.

(B) Addition of new section E to the Allegheny County Health Department-Bureau of Air Pollution Control (ACHD) Rules and Regulations, Article XX, Chapter II (Inspections, Reporting, Tests and Monitoring), § 202 (Reporting Requirements) were effective on October 8, 1992. This revision consists of an emission statement program for stationary sources which emit volatile organic compounds (VOCs) and/or nitrogen oxides (NO_X) at or above specified actual emission threshold levels. This program applies to stationary sources within the county of Allegheny.

(ii) Additional material.

(A) Remainder of December 31, 1992 state submittal pertaining to Pennsylvania Emission Statement Program.

(98) Revisions to the Pennsylvania Regulations Chapter 129.91 submitted on January 6, 1995 by the Pennsylvania Department of Environmental Resources:

(i) Incorporation by reference.

(A) Two letters both dated January 6, 1995 from the Pennsylvania Department of Environmental Resources transmitting source-specific VOC and/or NOx RACT determinations in the form of plan approvals and/or operating permits for the following sources: ESSROC Materials, Inc. (Northampton Co.)—cement manufacturer; Pennsylvania Power & Light—Brunner Island SES (York Co.)—utility, PPG Industries, Inc. (Cumberland Co.)—glass manufacturer; Stroehmann Bakeries, Inc. (Dauphin Co.)—bakery; GE Transportation Systems (Erie Co.)—utility; J.E. Baker/DBCA Refractory Facility (York Co.)—dolomitic refractory facility; Lafarge Corp. (Lehigh Co.)—cement manufacturer; West Penn Power Company—Armstrong Power Station (Armstrong Co.), utility. In addition, the plan approval for Plain n' Fancy Kitchens, Inc. (Lebanon Co., kitchen cabinet surface coating) containing provisions limiting this source as a synthetic minor source (below RACT threshold level of 50 TPY potential VOC emissions) is being approved.

(B) Plan approvals (PA), Operating permits (OP):

(*1*) ESSROC Materials, Inc.—PA 48–0004A, effective December 20, 1994, except conditions (7)(a), (7)(b), (7)(d), (8)(a), (8)(b), (8)(d), (10), (16) through (19) pertaining to particulate matter or SO_2 requirements and condition (25)(d)

and (e) pertaining to compliance date extensions, and the expiration date of the plan approval.

(*2*) Pennsylvania Power & Light—Brunner Island SES—PA 67–2005, effective December 22, 1994, except condition 2.d. and e. pertaining to compliance date extensions, and the expiration date of the plan approval.

(*3*) PPG Industries, Inc.—OP 21–2002, effective December 22, 1994, except the expiration date of the operating permit.

(*4*) Stroehmann Bakeries, Inc.—PA 22–2003, effective December 22, 1994, except condition 9.d. and e. pertaining to compliance date extensions and the expiration date of the plan approval.

(*5*) GE Transportation Systems—Erie—OP 25–025, effective December 21, 1994, except for condition 9 pertaining to pollutants other than VOC and NO_X.

(*6*) J.E. Baker/DBCA Refractory Facility—OP 67–2001, effective December 22, 1994, except the expiration date of the operating permit.

(*7*) Lafarge Corp.—PA 39–0011A, effective December 23, 1994, except for condition (4)(d) and (e) pertaining to compliance date extensions, condition (8) pertaining to sulfur in fuel requirements, those in condition (9) not pertaining to VOC or NO_X, and the expiration date of the plan approval, and OP 39–0011, effective December 23, 1994, except conditions (8), (9), and (13) through (15), pertaining to sulfur in fuel requirements, and the expiration date of the operating permit.

(*8*) West Penn Power Company—Armstrong Power Station—PA 03–000–023, effective December 29, 1994, except for the expiration date of the plan approval and condition 5. pertaining to VOC and condition 9. pertaining to a facility-wide NO_X cap, PA 03–306–004 (for unit 2), effective March 28, 1994, except for condition 12. (d) and (e), pertaining to compliance date extensions, and the expiration date of the plan approval, and PA 03–306–006 (for unit 1), effective November 22, 1994, except for condition 13. (d) and (e), pertaining to compliance date extensions, and the expiration date of the plan approval.

(*9*) Plain n' Fancy Kitchens, Inc.—PA 38–318–019C, effective December 23, 1994, except for condition 2.d. and e., pertaining to compliance date extensions, and the expiration date of the plan approval.

(99) Revisions to the Pennsylvania implementation plan for Allegheny County pertaining to the operation and maintenance of certain air pollution control devices at USX Corporation's Clairton Works submitted on April 26, 1995 by the Pennsylvania Department of Environmental Resources:

(i) Incorporation by reference.

(A) Letter of April 26, 1995 from Mr. James M. Seif, Secretary, Pennsylvania Department of Environmental Resources transmitting a SIP revision for Allegheny County regarding USX Corporation's Clairton Works.

(B) Portions of an enforcement order and agreement entered into by and between the Allegheny County Health Department and USX Corporation on November 17, 1994 (Enforcement Order No. 200 Upon Consent). Specifically, the introductory section (pages 1–2), the section entitled, ''I. Order'' (pages 2–6), and attachments C and D to the enforcement order and agreement which list the relevant pollution control equipment. The Agreement was effective on November 17, 1994.

(ii) Additional material.

(A) Remainder of Pennsylvania's December 9, 1993 submittal.

(100) [Reserved]

(101) Revisions to the State Implementation Plan submitted by the Pennsylvania Department of Environmental Resources regarding RACT requirements for two Stroehmann Bakeries, Inc. facilities located in Lycoming and Bradford Counties, submitted on February 24, 1995.

(i) Incorporation by reference.

(A) Letter of February 24, 1995 from the Pennsylvania Department of Environmental Resources submitting a revision to the State Implementation Plan.

(B) Plan Approval Nos. PA–41–0001 and PA–08–0001 and Operating Permit Nos. OP–41–0001A and OP–08–0001A, issued and effective February 9, 1995.

(ii) Additional material.

(A) Remainder of the State Implementation Plan revision request submitted by the Pennsylvania Department of Environmental Resources on February 24, 1995, pertaining to the

Plan Approvals and Operating Permits listed above.

(102) Revisions to the Pennsylvania Regulations Chapter 129.91 submitted on January 6, 1995, April 24, 1995 and May 31, 1995 by the Pennsylvania Department of Environmental Resources:

(i) Incorporation by reference.

(A) Four letters, two dated January 6, 1995, one dated April 24, 1995, and one dated May 31, 1995, from the Pennsylvania Department of Environmental Resources transmitting source-specific VOC and/or NOx RACT determinations in the form of plan approvals and/or operating permits for the following sources: (1) PECO Energy—Eddystone (Delaware Co.)—utility, (2) Gilberton Power Company (Schuylkill Co.)—utility, (3) Bethlehem Steel Structural Products Corp. (Northampton Co.)—steel manufacturer, (4) Westwood Energy Properties, Inc. (Schuylkill Co.)—utility, (5) PECO Energy Co.—Front Street (Montgomery Co.)—utility, (6) Crawford Furniture Manufacturing Corp. (Clarion Co.)—furniture manufacturer, (7) Schuylkill Energy Resources (Schuylkill Co.)—cogeneration plant, (8) Panther Creek Partners (Carbon Co.)—utility, (9) Columbia Gas Transmission Co.—Milford (Pike Co.), (10) Texas Eastern Transmission Corp.—Entriken (Huntingdon Co.)—Natural gas pipeline compressor station, (11) Columbia Gas Transmission Corp.—Greencastle (Franklin Co.). In addition, the operating permit for Lord Corporation (Erie Co.), aerospace surface coating operation containing provisions limiting this source as a synthetic minor source (below RACT threshold level of 50 TPY potential VOC emissions) is being approved.

(B) Plan approvals (PA), Operating permits (OP):

(*1*) PECO Energy—Eddystone—PA 23–0017, effective December 28, 1994, except the expiration date of the plan approval, and OP 23–0017, effective December 28, 1994, except the expiration date of the operating permit and conditions 6.C.(1) through (7), 6.D.(1)(c), 7.C.(1) through (5), 7.D.(1)(a) and 8.D.(1)(a) pertaining to SO_2 or PM10 requirements.

(*2*) Gilberton Power Company—OP 54–0004, effective December 20, 1994, except the expiration date of the operating permit and condition 5 pertaining to SO_2 and PM10 requirements.

(*3*) Bethlehem Structural Products Corp.—OP 48–0010, effective December 20, 1994, except the expiration date of the operating permit, OP 48–0013, effective December 20, 1994, except the expiration date of the operating permit and condition (11)(d) through (f) pertaining to sulfur and metals, OP 48–0014, effective December 20, 1994, except the expiration date of the operating permit and conditions (8) and (9) pertaining to particulate matter, and OP 48–0015, effective December 20, 1994, except the expiration date of the operating permit and conditions (9) and (10) pertaining to visible emissions and particulate matter.

(*4*) Westwood Energy Properties, Inc.—OP 54–0006, effective December 27, 1994, except the expiration date of the operating permit and the particulate and SO_2 emission limitations in condition (5).

(*5*) PECO Energy Company—Front Street—OP 46–0045, effective March 31, 1995, except the expiration date of the operating permit.

(*6*) Crawford Furniture Manufacturing Corp.—OP 16–021, effective March 27, 1995.

(*7*) Schuylkill Energy Resources—OP 54–0003, effective May 19, 1995, except the expiration date of the operating permit.

(*8*) [Reserved]

(*9*) Columbia Gas Transmission Company—Milford—OP 52–0001, effective May 19, 1995, except the expiration date of the operating permit.

(*10*) Texas Eastern Transmission Corp.—OP 31–2003, effective May 16, 1995, except the expiration date of the operating permit.

(*11*) Columbia Gas Transmission Corp.—Greencastle—OP 28–2003, effective April 21, 1995, except the expiration date of the operating permit.

(*12*) Lord Corporation—OP 25–095, effective March 30, 1995.

(103) Revisions to the Pennsylvania Regulations, Chapter 129.91 pertaining to VOC and NOx RACT and 1990 baseyear emissions inventory for one source, submitted on January 6, 1995, May 10, 1995, May 31, 1995, August 11, 1995 (as amended on November 15, 1995), October 24, 1995, and December 8, 1995

by the Pennsylvania Department of Environmental Resources (now known as the Pennsylvania Department of Environmental Protection):

(i) Incorporation by reference.

(A) Nine letters: three dated January 6, 1995, and one each dated May 10, 1995, May 31, 1995, August 11, 1995, October 24, 1995, November 15, 1995, and December 8, 1995 from the Pennsylvania Department of Environmental Resources (now known as the Pennsylvania Department of Environmental Protection) transmitting source specific VOC and/or NOx RACT determinations in the form of plan approvals or operating permits for the following sources: Tennessee Gas Pipeline Company—Station 313 (Potter Co.)—natural gas transmission and gas storage station; Corning Asahi Video Products Company (Centre Co.)—glass manufacturer; Columbia Gas Transmission Company—Easton station (Northampton Co.)—natural gas compressor station, (4) Texas Eastern Transmission Corporation—Bedford (Bedford Co.)—natural gas compressor station; Texas Eastern Transmission—Marietta (Lancaster Co.)—natural gas compressor station; Hercules Cement Company (Northampton Co.)—cement manufacturer; Lone Star Industries (Northampton Co.)—cement manufacturer; Pennsylvania Power and Light—Montour SES (Montour Co.)—utility; Pennsylvania Electric Company—Shawville (Clearfield Co.)—utility; Zinc Corporation of America—Monaca (Beaver Co.)—zinc smelting; Procter and Gamble Paper Products—Mehoopany (Wyoming Co.)—pulp and paper making facility. In addition, the operating permit for Columbia Gas Transmission Corporation—Union City (Erie Co.), a natural gas compressor station, containing provisions limiting this source as a synthetic minor source (below RACT threshold level of 100 tons per year of potential NOx emissions) is being approved.

(B) Plan approvals (PA), Operating permits (OP):

(*1*) Tennessee Gas Pipeline Company—Station 313—PA 53–0001, effective November 27, 1995, except the expiration date of the plan approval and the portion of condition #6 pertaining to CO emissions, OP 53–0001, effective November 27, 1995, except the expiration date of the operating permit, condition #21 pertaining to prevention of significant deterioration and the portions of condition #22 pertaining to CO emissions, and Compliance permit (CP) 53–0001, effective November 27, 1995, except the expiration date of the compliance permit.

(*2*) Corning Asahi Video Products Company—OP 14–0003, effective December 27, 1994, except the expiration date of the operating permit, OP 14–309–010A, effective May 5, 1994, except the expiration date of the operating permit and condition #6 and 7, pertaining to particulate matter and arsenic, OP 14–309–009C, effective August 18, 1994, except the expiration date of the operating permit and conditions #12 and 14, pertaining to particulate matter and lead, and OP 14–309–037A, effective May 5, 1994, except the expiration date of the operating permit and conditions #10, 11, 12, and 15, pertaining to particulate matter, fluorides and arsenic.

(*3*) Columbia Gas Transmission Company—Easton—OP 48–0001, effective May 19, 1995, except the expiration date of the operating permit and PA 48–0001A, effective May 19, 1995, except the expiration date of the plan approval.

(*4*) Texas Eastern Transmission Corporation—Bedford—OP 05–2007, effective May 16, 1995, except the expiration date of the operating permit.

(*5*) Texas Eastern Transmission Corporation—Marietta—PA 36–2025, effective May 16, 1995, except the expiration date of the plan approval and condition #2, pertaining to compliance date extensions.

(*6*) Hercules Cement Company—PA 48–0005A, effective December 23, 1994, except the expiration date of the plan approval and condition #4, pertaining to compliance date extensions, and all the following conditions that do not pertain to VOC or NO_X RACT: #10(a), (b) and (d), #11(a), (b) and (d), #12(a), (b) and (d), #13(a), (b) and (d), #14, #15, #21 through 24, #30, pertaining to compliance date extensions and OP 48–0005, effective December 23, 1994, except the expiration date of the operating permit and conditions #8 and 9, pertaining to particulate matter.

(*7*) Lone Star Industries—OP 48–0007, effective December 20, 1994, except the

expiration date of the operating permit.

(*8*) Pennsylvania Power & Light—Montour SES—PA 47–0001A, effective December 27, 1994, except the expiration date of the plan approval and condition #14, pertaining to compliance date extensions and OP 47–0001, effective December 27, 1994, except the expiration date of the operating permit.

(*9*) Pennsylvania Electric Company—Shawville—PA 17–0001, effective December 27, 1994, except the expiration date of the plan approval and condition #19, pertaining to compliance date extensions.

(*10*) Zinc Corporation of America—Monaca—OP 04–000–044, effective December 29, 1994, except for the expiration date of the operating permit and those portions of conditions #8 and 9 pertaining to CO and PM_{10}.

(*11*) Procter and Gamble Paper Products Company—Mehoopany—OP 66–0001, effective December 20, 1994, except the expiration date of the operating permit and PA 66–0001A, effective December 20, 1994, except the expiration date of the plan approval and condition #4, pertaining to compliance date extensions, those portions of condition #5, pertaining to CO, SO_2 or particulate matter, and condition #17, pertaining to odor.

(*12*) Columbia Gas Transmission Corporation—Union City—OP 25–892, effective April 11, 1995 except the portion of condition #8, pertaining to compliance date extensions.

(ii) Additional Material.

(A) Remainder of January 6, 1995, May 10, 1995, May 31, 1995, August 11, 1995, October 24, 1995, and December 8, 1995 State submittals.

(B) Additional clarifying material submitted by Pennsylvania: Letter dated July 18, 1995 from Matthew M. Williams, Air Pollution Control Engineer, Pennsylvania DEP, to Steve H. Finch, Vice President, Environmental Affairs, Columbia Gas Transmission Corporation, stating that the effective date of the Columbia Gas Transmission Corporation—Union City operating permit (OP 25–892) is April 11, 1995.

(104) Revisions to the Pennsylvania Regulations Chapter 129.91 submitted on August 1, 1995 by the Pennsylvania Department of Environmental Protection:

(i) Incorporation by reference.

(A) Two letters, one dated August 1, 1995, from James Seif, Secretary of the Pennsylvania Department of Environmental Protection, transmitting source-specific VOC and/or NO_X RACT determinations in the form of operating permits for the following sources: James River Corporation—Chambersburg (Franklin County)—printer. In addition, operating permits for the following sources containing provisions limiting these sources as ''synthetic minor'' sources (below RACT threshold level for VOC and/or NO_X emissions) are being approved: Appleton Papers, Inc. (Cumberland County)—carbon paper producer; Air Products & Chemicals, Inc.—Trexlortown (Lehigh County)—gas production/storage facility; Elf Atochem North America, Inc. (Montgomery County)—chemical research & development firm; York City Sewer Authority—Manchester Township (York County)—waste water treatment facility; Glasgow, Inc.—Ivy Rock Plants 1 & 2 (Montgomery County)—asphalt production facility; Glasgow, Inc.—Catanach Plant (Chester County)—asphalt production facility; Glasgow, Inc.—Freeborn Asphalt Plant (Delaware County)—asphalt production facility.

(B) One letter, dated November 15, 1995, from James Seif, Secretary of the Pennsylvania Department of Environmental Protection, transmitting source-specific VOC and/or NO_X RACT determinations in the form of operating permits including the following source: Glasgow, Inc.—Spring House Plants 1 & 2 (Montgomery County)—asphalt production facility;

(C) Operating permits (OP):

(*1*) James River Corporation—OP 28–2006, effective June 14, 1995, except the expiration date of the operating permit.

(*2*) Appleton Papers, Inc.—OP 21–2004, effective May 24, 1995, except the expiration date of the operating permit.

(*3*) Air Products and Chemicals, Inc.—OP 39–0008, effective May 25, 1995, except the expiration date of the operating permit.

(*4*) Elf Atochem North America, Inc.—OP 46–0022, effective June 27, 1995,

except the expiration date of the operating permit.

(*5*) York City Sewer Authority, Manchester Township—OP 67–2013, effective March 1, 1995, except the expiration date of the operating permit.

(*6*) Glasgow, Inc., Ivy Rock Asphalt Plants 1 & 2—OP 46–0043, effective June 7, 1995, except for the expiration date of the operating permit.

(*7*) Glasgow, Inc., Spring House Asphalt Plants 1 & 2—OP 46–0029, effective June 7, 1995, except for the expiration date of the operating permit.

(*8*) Glasgow, Inc., Catanach Asphalt Plant—OP 15–0021, effective June 7, 1995, except for the expiration date of the operating permit.

(*9*) Glasgow, Inc., Freeborn Asphalt Plant—OP 23–0026, effective June 7, 1995, except for the expiration date of the operating permit.

(105) The carbon monoxide redesignation and maintenance plan for part of Philadelphia County submitted by the Pennsylvania Department of Environmental Protection on September 8, 1995 and October 30, 1995, as part of the Pennsylvania SIP. The 1990 base year CO emission inventory and projections are included in the maintenance plan.

(i) Incorporation by reference.

(A) Letters of September 8, 1995 and October 30, 1995 from the Pennsylvania Department of Environmental Protection requesting the redesignation and submitting the maintenance plan.

(B) Maintenance Plan for the Philadelphia Carbon Monoxide Nonattainment Area adopted on October 16, 1995.

(ii) Additional Material.

(A) Remainder of September 8, 1995 and October 30, 1995 State submittal.

(106) Revisions to the Pennsylvania Regulations, Chapter 129.82 pertaining to Stage II Vapor Recovery and the associated definition of gasoline dispensing facilities originally submitted on March 4, 1992 and supplemented on October 26, 1995 by the Pennsylvania Department of Environmental Protection (formerly known as the Department of Environmental Resources):

(i) Incorporation by reference.

(A) Letter of October 26, 1995 from the Pennsylvania Department of Environmental Protection transmitting sections 6.7 (b), (c), (h) and section 17(2) of the Pennsylvania Air Pollution Control Act as amended on June 29, 1992.

(B) Sections 6.7 (b), (c), (h), and section 17(2) of the Pennsylvania Air Pollution Control Act, amended June 29, 1992 and effective on July 9, 1992.

(107) [Reserved]

(108) Revisions to the Pennsylvania Regulations, Chapter 129.91 pertaining to VOC and NO_X RACT, submitted on January 6, 1995, July 5, 1995, July 31, 1995, August 1, 1995, September 20, 1995, November 22, 1995, and March 18, 1996 by the Pennsylvania Department of Environmental Resources (now known as the Pennsylvania Department of Environmental Protection):

(i) Incorporation by reference.

(A) Seven letters, dated January 6, 1995, July 5, 1995, July 31, 1995, August 1, 1995, September 20, 1995, November 22, 1995, and March 18, 1996 from the Pennsylvania Department of Environmental Resources (now known as the Pennsylvania Department of Environmental Protection) transmitting source specific VOC and/or NO_X RACT determinations in the form of plan approvals or operating permits for the following sources: U.G.I. Utilities, Inc. (Luzerne Co.)—utility, Solar Turbines (York Co.)—cogeneration facility, Columbia Gas Transmission—Renovo Compressor Station (Clinton Co.)—natural gas compressor station, National Fuel Gas Supply Corporation—East Fork Compressor Station (Potter Co.)—natural gas compressor station, York Resource Energy Systems, Inc. (York Co.)—municipal waste combustion facility, W.R. Grace & Co.—Formpac Division (Berks Co.)—expandable polystyrene blowing facility, CNG Transmission—Cherry Tree Station (Indiana Co.)—natural gas transmission station, EPC Power Corporation of Bethlehem (Delaware Co.)—Crozer Chester Cogeneration Plant, C-P Converters, Inc. (York Co.)—flexographic printing operation, Fisher Scientific Co. International—Instrument Manufacturing Division (Indiana Co.). In addition, the permits containing provisions limiting source emissions to synthetic minor sources levels (below RACT threshold level of 100 tons per year or 25 TPY of potential NO_X emissions and 50 TPY or 25 TPY for potential VOC emissions) are being approved

for three sources: Adelphi Kitchens, Inc.—Robesonia factory (Berks Co.)—wood furniture coating operation, Birchcraft Kitchens, Inc.—Reading factory (Berks Co.)—wood furniture coating operation, and Glasgow, Inc.—Bridgeport Asphalt Plant (Montgomery Co.)—asphalt plant.

(B) Plan approvals (PA), Operating permits (OP), Compliance permit (CP):

(*1*) U.G.I. Utilities, Inc.—OP 40–0005, effective December 20, 1994 and PA 40–0005A, effective December 20, 1994, except the expiration date of the plan approval and conditions # 18, 19, and 20 pertaining to non-VOC or NO_X emissions and ash and waste oil requirements.

(*2*) Solar Turbines—PA 67–2009, effective August 17, 1995, except the expiration date of the plan approval and CP 67–2009, effective August 17, 1995, except the expiration date of the compliance permit.

(*3*) Columbia Gas Transmission—Renovo Compressor Station—OP 18–0001, effective July 18, 1995, except the expiration date of the operating permit and condition #8, pertaining to compliance date extensions and PA 18–0001, effective July 18, 1995, except the expiration date of the plan approval and condition #14, pertaining to compliance date extensions.

(*4*) National Fuel Gas Supply Corporation—East Fork Compressor Station—OP 53–0007, effective July 17, 1995, except the expiration date of the operating permit, including the corrections to condition #6 and 13 (from a letter dated July 31, 1995) and PA 53–0007A, effective July 17, 1995, except the expiration date of the plan approval.

(*5*) York Resource Energy Systems, Inc.—PA 67–2006, effective August 25, 1995, except the expiration date of the plan approval and the non-VOC or non-NO_X elements in conditions #4, 8, 9, 10 12, 18, and 19.

(*6*) W.R. Grace & Co.—Formpac Division—PA 06–1036, effective May 12, 1995, except the expiration date of the plan approval and condition #10 (d) and (e) pertaining to compliance date extensions and PA 06–315–001, effective June 4, 1992, except the expiration date of the plan approval.

(*7*) CNG Transmission Corporation—Cherry Tree Station—PA 32–000–303, effective July 5, 1995, except the expiration date of the plan approval, the elements in condition #6 pertaining to carbon monoxide, and condition #16 D. and E. pertaining to compliance date extensions.

(*8*) EPC Power Corporation of Bethlehem—Crozer Chester Cogeneration plant—OP 23–0007, effective June 8, 1995, except the expiration date of the operating permit.

(*9*) C–P Converters, Inc.—OP 67–2030, effective August 30, 1995, except the expiration date of the operating permit.

(*10*) Fisher Scientific—Instrument Manufacturing Division—OP 32–000–100, effective July 18, 1995, except the expiration date of the operating permit.

(*11*) Adelphi Kitchens, Inc.—Robesonia factory—OP 06–1001, effective April 4, 1995, except the expiration date of the operating permit.

(*12*) Birchcraft Kitchens, Inc.—Reading factory—OP 06–1005, effective April 4, 1995, except the expiration date of the operating permit.

(*13*) Glasgow, Inc.—Bridgeport Asphalt Plant—OP 46–0044, effective June 7, 1995, except the expiration date of the operating permit.

(ii) Additional material.

(A) Remainder of January 6, 1995, July 5, 1995, August 1, 1995, September 20, 1995, State submittals.

(B) Revision to the Pennsylvania SIP dated March 18, 1996, submitted by the Pennsylvania Department of Environmental Protection, pertaining to the 1990 emission inventory for General Glass—Jeannette, Westmoreland County.

[38 FR 16567, June 22, 1973]

EDITORIAL NOTE: For FEDERAL REGISTER citations affecting § 52.2020, see the List of CFR Sections Affected in the Finding Aids section of this volume.

EFFECTIVE DATE NOTE: At 61 FR 29665, June 12, 1996, § 52.2020 was amended by adding paragraphs (c)(90), (c)(91), and (c)(92), effective July 12, 1996.

§ 52.2021 Classification of regions.

The Pennsylvania plan was evaluated on the basis of the following classifications:

Air quality control region	Pollutant				
	Particulate matter	Sulfur oxides	Nitrogen dioxide	Carbon monoxide	Ozone (hydrocarbons)
Metropolitan Philadelphia Interstate	I	I	III	I	I
Northeast Pennsylvania-Upper Delaware Valley Interstate	I	II	III	III	III
South Central Pennsylvania Intrastate	I	II	III	III	III
Central Pennsylvania Intrastate	I	III	III	III	III
Southwest Pennsylvania Intrastate	I	I	III	I	I
Northwest Pennsylvania-Youngstown Interstate	I	II	III	III	III

[37 FR 10889, May 31, 1972, as amended at 39 FR 16347, May 8, 1974; 45 FR 33627, May 20, 1980]

§ 52.2022 Extensions.

(a) The Administrator hereby extends for 18 months the statutory timetable for submission of Pennsylvania's plan for attainment and maintenance of the secondary standards for sulfur oxides and particulate matter in the Southwest Pennsylvania Intrastate Region and in Pennsylvania's portion of the Metropolitan Philadelphia Interstate Region.

(b) The Administrator hereby extends for 2 years the attainment date for the national standards for carbon monoxide in the Southwest Pennsylvania Intrastate Region, for 1 year the attainment date for the national standard for photochemical oxidants in the Southwest Pennsylvania Intrastate Region, and for 1 year the attainment date for the national standards for carbon monoxide in the Pennsylvania portion of the Metropolitan Philadelphia Interstate Region.

(c) The Administrator hereby extends for 18 months, until July 1, 1980, the statutory timetable for submission of Pennsylvania's plan for attainment and maintenance of the secondary national ambient air quality standard for particulate matter in Pennsylvania's portion of the Metropolitan Philadelphia Interstate Air Quality Control Region.

(d) The Administrator hereby extends the attainment date for the national ambient air quality standard for ozone to December 31, 1987 for the following counties:

Allegheny, Armstrong, Beaver, Butler, Washington, Westmoreland, Bucks, Chester, Delaware, Montgomery, Philadelphia, Lehigh, and Northampton.

(e) The Administrator hereby extends the dates for attainment of the national ambient air quality standard for carbon monoxide to December 31, 1987 in Philadelphia County and to December 31, 1985 in Allegheny County.

[37 FR 10889, May 31, 1972, as amended at 38 FR 32893, Nov. 28, 1973; 45 FR 33627, May 20, 1980; 46 FR 43141, Aug 27, 1981; 50 FR 7777, Feb. 26, 1985]

§ 52.2023 Approval status.

(a) With the exceptions set forth in this subpart, the Administrator approves Pennsylvania's plan for attainment and maintenance of the national standards.

(b) With the exceptions set forth in this subpart, the Administrator approves Pennsylvania's plan for the attainment and maintenance of the national ambient air quality standards under section 110 of the Clean Air Act. Furthermore, the Administrator finds that the plan satisfies all requirements of Part D, Title 1, of the Clean Air Act as amended in 1977, except as noted below.

(c) The Allegheny County Bureau of Air Pollution Control (BAPC) Article XX, section 534 at paragraph D, does not fulfill its 1982 ozone SIP commitment to adopt all applicable control technique guidelines published by EPA. These regulations establish and require reasonable available control technology to control fugitive volatile organic compounds emissions (VOC) from synthetic organic chemical and polymer manufacturing–fugitive sources and associated test method required to determine compliance, but provide the Director of the Bureau authority to approve an alternative VOC emission reduction system and/or alternative monitoring procedure. The approval of any such alternatives by the Director of the BAPC cannot and would not amend the SIP. Only the Administrator of the

United States Environmental Protection Agency (EPA) has the authority to approve an alternative VOC emission reduction system and/or the use of an alternative monitoring procedure as a revision to the SIP. Air Pollution Article XX, section 534 at paragraph D of the SIP will remain inadequate until this language providing for Director discretion is corrected to require that any such alternatives approved by the Director of BAPC must also be approved by EPA. The amended version of Article XX, section 534, paragraph D must be adopted by the Commonwealth, submitted to EPA and approved as a SIP revision to correct this deficiency in the Pennsylvania SIP.

(d) Limited approval/limited disapproval of revisions to the Pennsylvania Regulations, Chapter 129.82 pertaining to Stage II Vapor Recovery and the associated definition of gasoline dispensing facilities in Chapter 121.1 submitted on March 4, 1992, by the Pennsylvania Department of Environmental Resources. The Pennsylvania Stage II regulation is deficient in that it does not include the testing and certification procedures contained in EPA's October 1991 Stage II guidance documents (EPA–450/3–91–022a and EPA–450/3–91–022b).

(e)–(i) [Reserved]

(j) The conditionally approved Pennsylvania enhanced I/M SIP revision (59 FR 44936) submitted on November 3, 1993 by the Pennsylvania Department of Environmental Resources was converted to a disapproval by an April 13, 1995 letter from EPA to Pennsylvania.

[38 FR 32893, Nov. 28, 1973, as amended at 45 FR 33627, May 20, 1980; 51 FR 18440, May 20, 1986; 53 FR 31330, Aug. 18, 1988; 59 FR 6220, Feb. 10, 1994; 59 FR 30304, June 13, 1994; 60 FR 47085, Sept. 11, 1995; 61 FR 16062, Apr. 11, 1996]

§ 52.2024 General requirements.

(a) The requirements of § 51.116(c) of this chapter are not met since the legal authority to provide for public availability of emission data is inadequate.

(b) *Regulation for public availability of emission data.* (1) Any person who cannot obtain emission data from the Agency responsible for making emission data available to the public, as specified in the applicable plan, concerning emissions from any source subject to emission limitations, which are part of the approved plan may request that the appropriate Regional Administrator obtain and make public such data. Within 30 days after receipt of any such written request, the Regional Administrator shall require the owner or operator of any such source to submit information within 30 days on the nature and amounts of emissions from such source and any other information as may be deemed necessary by the Regional Administrator to determine whether such source is in compliance with applicable emission limitations or other control measures that are part of the applicable plan.

(2) Commencing after the initial notification by the Regional Administrator pursuant to paragraph (b)(1) of this section, the owner or operator of the source shall maintain records of the nature and amounts of emissions from such source and any other information as may be deemed necessary by the Regional Administrator to determine whether such source is in compliance with applicable emission limitations or other control measures that are part of the plan. The information recorded shall be summarized and reported to the Regional Administrator, on forms furnished by the Regional Administrator, and shall be submitted within 45 days after the end of the reporting period. Reporting periods are January 1 to June 30 and July 1 to December 31.

(3) Information recorded by the owner or operator and copies of this summarizing report submitted to the Regional Administrator shall be retained by the owner or operator for 2 years after the date on which the pertinent report is submitted.

(4) Emission data obtained from owners or operators of stationary sources will be correlated with applicable emission limitations and other control measures that are part of the applicable plan and will be available at the appropriate regional office and at other locations in the state designated by the Regional Administrator.

[39 FR 34537, Sept. 26, 1974, as amended at 40 FR 55333, Nov. 28, 1975; 51 FR 40676, Nov. 7, 1986]

§ 52.2025 Legal authority.

(a) The requirements of § 51.230(f) of this chapter are not met, since section 5–1104 of the Philadelphia Home Rule Charter could, in some circumstances, prohibit the disclosure of emission data to the public. Therefore, section 5–1104 is disapproved.

[40 FR 55333, Nov. 28, 1975, as amended at 51 FR 40676, Nov. 7, 1986]

§§ 52.2026—52.2029 [Reserved]

§ 52.2030 Source surveillance.

(a) [Reserved]

(b) [Reserved]

(c) The requirements of § 51.212 of this chapter are not met because the plan does not provide procedures for obtaining and maintaining data on actual emission reductions achieved as a result of implementing transportation control measures.

[37 FR 10889, May 31, 1972, as amended at 37 FR 15088, July 27, 1972; 38 FR 12701, May 14, 1973; 38 FR 16567, June 22, 1973; 51 FR 40677, Nov. 7, 1986; 61 FR 16062, Apr. 11, 1996]

§ 52.2031 [Reserved]

§ 52.2032 Intergovernmental cooperation.

(a) The requirements of subpart M of this chapter are not met because the plan does not identify other State or local agencies or their responsibilities for implementing and carrying out designated portions of the plan.

(b) The requirements of subpart M of this chapter are not met because the plan does not indicate that Pennsylvania will transmit to the neighboring States of Maryland, New York, and West Virginia data about factors which may significantly affect air quality in those States.

[38 FR 16568, June 22, 1973, as amended at 51 FR 40677, Nov. 7, 1986]

§ 52.2033 Control strategy: Sulfur oxides.

(a) The revision to the control strategy resulting from the modification to the emission limitation applicable to the sources listed below or the change in the compliance date for such sources with the present emission limitation is hereby approved. All regulations cited are air pollution control regulations of the State, unless otherwise noted. (See § 52.2036 for compliance schedule approvals and disapprovals pertaining to one or more of the sources listed below.)

Source	Location	Regulation involved	Date of submittal
Clairton Coke and Coal Works (U.S. Steel).	Allegheny County.	Section 1809 (Article XVIII).	12/14/72
Industrial Boilers (U.S. Steel).	.....do	.....do	Do.

[38 FR 7459, Mar. 22, 1973]

§ 52.2034 Attainment dates for national standards.

With regard to Northumberland County, Snyder County, and Allegheny County, Pennsylvania has not submitted a plan, as of December 31, 1979, providing for the attainment and maintenance of the secondary sulfur dioxide (SO_2) standards.

[61 FR 16062, Apr. 11, 1996]

§ 52.2035 Photochemical Assessment Monitoring Stations (PAMS) Program.

On September 23, 1994 Pennsylvania's Department of Environmental Resources (now known as the Department of Environmental Protection) submitted a plan for the establishment and implementation of a Photochemical Assessment Monitoring Stations (PAMS) Program as a state implementation plan (SIP) revision, as required by section 182(c)(1) of the Clean Air Act. EPA approved the Photochemical Assessment Monitoring Stations (PAMS) Program on September 11, 1995 and made it part of Pennsylvania SIP. As with all components of the SIP, Pennsylvania must implement the program as submitted and approved by EPA.

[60 FR 47084, Sept. 11, 1995]

§ 52.2036 1990 Baseyear Emission Inventory.

(a) EPA approves as a revision to the Pennsylvania State Implementation Plan the 1990 base year carbon monoxide emission inventory for Philadelphia County, submitted by the Secretary, Pennsylvania Department of

Environmental Protection, on September 8, 1995 and October 30, 1995. This submittal consists of the 1990 base year stationary, area, non-road mobile and on-road mobile emission inventories in Philadelphia County for the pollutant carbon monoxide (CO).

(b) The U.S. Steel—Fairless Hills 1990 VOC and NO_X emissions for six emission units (no. 3 blast furnace, no.1 open hearth furnace, no. 1 soaking pits and no. 2 soaking pits (units 1–8 and units 9–16), and 80 in. hot strip mill), submitted August 11, 1995, are approved. U.S. Steel—Fairless Hills is located in Montgomery County, Pennsylvania, which is part of the Philadelphia severe ozone nonattainment area. The VOC and NO_X 1990 emissions from the no. 3 blast furnace are zero for both pollutants. The VOC and NO_X 1990 emissions from the no. 1 open hearth furnace are 6.9 TPY and 455.5 TPY, respectively. The VOC and NO_X emissions from the no. 1 soaking pits are 6.6 TPY and 91.8 TPY, respectively. The VOC and NO_X emissions from the no. 2 soaking pits (units 1–8) are 1.10 TPY and 21.0 TPY, respectively. The VOC and NO_X emissions from the no. 2 soaking pits (units 9–16) are 1.10 TPY and 21.0 TPY, respectively. The VOC and NO_X emissions from the 80 in. hot strip mill are 1.9 TPY and 688.6 TPY, respectively.

(c) The 1990 NO_X emissions for the no. 2 glass melting furnace at the General Glass—Jeannette plant, located in Westmoreland County, Pennsylvania is 508.2 tons per year. Westmoreland County is part of the Pittsburgh moderate ozone nonattainment area. The 1990 NO_X emissions for the four kilns (no. 1 through 4) is 11.8 tons per year. This facility does not contain any other NO_X emitting units.

[61 FR 2931, Jan. 30, 1996, as amended at 61 FR 15713, Apr. 9, 1996; 61 FR 24709, May 16, 1996]

§ 52.2037 Control strategy: Carbon monoxide and ozone (hydrocarbons).

(a) Part D—Conditional Approval—the Pennsylvania plan for carbon monoxide and ozone is approved provided that the following conditions are satisfied:

(1) Firm commitments to implement the Newton Branch electrification are submitted to EPA by December 30, 1980. If firm commitments are not submitted, the State must submit substitute measures with equivalent reductions by June 30, 1981.

(b)(1)(i) Determination—EPA has made a determination, effective August 15, 1996, that the Pittsburgh-Beaver Valley ozone nonattainment area (the Pittsburgh area) is no longer in attainment of the National Ambient Air Quality Standard for ozone due to monitored violations of the standard. Therefore, effective August 15, 1996, EPA is revoking the determination of attainment for the area made July 19, 1995, and is reinstating the reasonable further progress and attainment demonstration requirements of section 182(b)(1) and contingency measure requirements of section 172(c)(9) of the Clean Air Act beginning on August 15, 1996. With regard to the attainment demonstration requirements, EPA has determined that the following schedule is reasonable for the development, adoption, and submittal of an attainment demonstration by the Commonwealth of Pennsylvania (the Commonwealth).

(A) By August 15, 1996, the Commonwealth must submit to EPA, and make available for public comment as a proposed SIP submission, complete photochemical oxidant modeling for the Pittsburgh area which identifies the VOC and NO_X reductions levels necessary for attainment, and a list of available control strategies.

(B) By October 1, 1996, the Commonwealth must submit to EPA a SIP revision containing a photochemical oxidant modeling demonstration and a list of available control strategies.

(C) By April 1, 1997, the Commonwealth must submit to EPA a full SIP revision for those emission reduction strategies selected by the Commonwealth for the Pittsburgh area for which new regulations are not required.

(D) By April 1, 1997, the Commonwealth must submit to EPA a committal SIP revision for those emission reduction strategies selected by the Commonwealth for the Pittsburgh area that require new regulations.

(E) By December 31, 1997, the Commonwealth must submit to EPA as a

SIP revision adopted final fully enforceable regulations encompassing the emission reduction strategies contained in the committal SIP.

(ii) Unless the Commonwealth makes the required submittal to EPA, the sanctions and sanction clocks halted by the July 19, 1995 action suspending the attainment demonstration requirements at issue will be reinstated, as to each of the submittals included in this milestone schedule, two weeks after the date set for each of the submittals by the Commonwealth to EPA. If the Commonwealth fails to make a submission by the required date, the offset sanction would go back into effect two weeks after the relevant milestone date, and the highway sanction clock would be reinstated at that time where it was halted on July 19, 1995 (i.e., with approximately 6 months remaining). Sanctions or sanctions clocks would be stopped if the Commonwealth makes the relevant overdue submittal, if EPA affirmatively determines in writing that the actual material submitted by the Commonwealth contains the information necessary to enable EPA to determine whether the Commonwealth's submission complies with the pertinent milestone requirement. EPA shall make the determination, in writing, as to whether the submittal contains the necessary information within two weeks of the actual submission date by the Commonwealth. In the event the Commonwealth makes a required submittal by the pertinent milestone date, EPA shall, within two weeks of the milestone date, make a determination, in writing, as to whether the actual material submitted by the Commonwealth contains the information necessary to enable EPA to determine whether the Commonwealth's submission complies with the pertinent milestone requirement. If EPA determines that the material submitted to EPA by the Commonwealth fails to satisfy this minimum criterion, the offset sanction would be reinstated upon that determination by EPA and the highway sanction clock would be reinstated at that time where it was halted on July 19, 1995 (i.e., with approximately 6 months remaining). Sanctions or sanctions clocks would be stopped if the Commonwealth subsequently makes a submittal to cure the deficiencies identified by EPA, and if EPA affirmatively determines in writing that the material submitted by the Commonwealth cures the identified deficiencies. EPA shall make the determination as to the adequacy of the submittal within two weeks of the date of the actual submittal to EPA. Each of the determinations referred to in this subparagraph shall be made in writing, in a letter to the Secretary of the Pennsylvania Department of Environmental Protection and made publicly available. In those instances where EPA determines that the Commonwealth's submittal does not contain the information necessary to enable EPA to determine whether the Commonwealth's submission complies with the pertinent milestone requirement, EPA's letter so informing the Commonwealth will articulate the basis for EPA's determination, specify the remedy, and identify the actions necessary by the Commonwealth to remedy its submission to satisfy the relevant milestone. With respect to the 15 percent plan and contingency measure requirements that are being reinstated as of August 15, 1996, the FIP clock will be reinstated at that time, with one day less than six months to run. With respect to the elements of the attainment demonstration, the FIP clock will resume as to each element (the date on which the sanctions would be reinstated if the submissions were not made), with one day less than six months to run.

(2) Determination—EPA has determined that, as of July 19, 1995, the Reading ozone nonattainment area has attained the ozone standard and that the reasonable further progress and attainment demonstration requirements of section 182(b)(1) and related requirements of section 172(c)(9) of the Clean Air Act do not apply to this area for so long as the area does not monitor any violations of the ozone standard. If a violation of the ozone NAAQS is monitored in the Reading ozone nonattainment area, these determinations shall no longer apply.

(c) VOC and NO_X RACT determination for six emission units at U.S. Steel—Fairless: no. 3 blast furnace, no. 1 open hearth furnace, no. 1 soaking pits, no. 2 soaking pits (units 1–8), no.

2 soaking pits (units 9–16), 80 in. hot strip mill. The NO_X RACT determination for all the soaking pits and the 80 in. hot strip mill is low excess air (LEA), which is expected to result in a 13.5% emission reduction. NO_X RACT for the other sources is determined to be good operating practices to minimize NO_X emissions. VOC RACT for all the above sources is determined to be good operating practices to minimize VOC emissions.

(d) NO_X RACT determination for the no. 2 glass melting furnace and the four kilns at the General Glass—Jeannette plant, which manufactured flat glass, is the current operation, consisting of no additional controls.

[46 FR 17553, Mar. 19, 1981, as amended at 47 FR 8359, Feb. 26, 1982; 47 FR 25010, June 9, 1982; 60 FR 37018, July 19, 1995; 61 FR 15713, Apr. 9, 1996; 61 FR 24709, May 16, 1996; 61 FR 28066, June 4, 1996]

EFFECTIVE DATE NOTE: At 61 FR 28066, June 4, 1996, § 52.2037 was amended by revising paragraph (b)(1), effective Aug. 15, 1996. For the convenience of the user the superseded text is set forth as follows:

§52.2037 Control Strategy: Carbon Monoxide and Ozone .

* * * * *

(b)(1) Determination—EPA has determined that, as of July 19, 1995, the Pittsburgh-Beaver Valley ozone nonattainment area has attained the ozone standard and that the reasonable further progress and attainment demonstration requirements of section 182(b)(1) and related requirements of section 172(c)(9) of the Clean Air Act do not apply to this area for so long as the area does not monitor any violations of the ozone standard. If a violation of the ozone NAAQS is monitored in the Pittsburgh-Beaver Valley ozone nonattainment area, these determinations shall no longer apply.

* * * * *

§§52.2038—52.2053 [Reserved]

§52.2054 Control of asphalt paving material.

(a) Notwithstanding any provisions to the contrary in the Pennsylvania Implementation Plan, the Pennsylvania Department of Transportation shall restrict the annual usage of asphalts to the limits listed below in the following sixteen county area of Pennsylvania: Allegheny, Armstrong, Beaver, Butler, Cambria, Clarion, Fayette, Green, Indiana, Jefferson, Lawrence, Mercer, Somerset, Venango, Washington, and Westmoreland Counties:

(1) No more than twenty percent of the total amount of liquid bituminous asphalt paving material used shall be cutback asphalt; and

(2) No more than 2,615,000 gallons of cutback asphalts shall be used, of which no more than 1,400,000 gallons may be used for dust palliative work on roadways and shoulders; and

(3) No more than 2,500,000 gallons total of emulsion Class E–4 and Class E–5 shall be used unless an equivalent reduction in the use of cutbacks is made to balance the additional hydrocarbon emissions from emulsions.

(b) The Pennsylvania Department of Transportation is required to submit to the Pennsylvania Department of Environmental Resources, on a quarterly basis, reports which list for each of the affected counties the number of gallons of each class of asphalt used. The first quarterly reports will be submitted in October 1977 for the period between July 1, 1977, and September 30, 1977. Copies of all reports will also be forwarded to Region III, EPA.

[42 FR 54417, Oct. 6, 1977]

§52.2055 Review of new sources and modifications.

(a) Special permit requirement regulations are approved.

(b) [Reserved]

[39 FR 7283, Feb. 25, 1974, as amended at 46 FR 17554, Mar. 19, 1981; 46 FR 51742, Oct. 22, 1981; 47 FR 8359, Feb. 26, 1982; 60 FR 33924, June 29, 1995]

§52.2056 [Reserved]

§52.2057 Requirements for state implementation plan revisions relating to new motor vehicles.

Pennsylvania must comply with the requirements of §51.120.

[60 FR 4738, Jan. 24, 1995]

§52.2058 Prevention of significant air quality deterioration.

(a) The requirements of sections 160 through 165 of the Clean Air Act are met by the regulations (25 PA Code

§ 127.81 through 127.83) adopted by the Pennsylvania Environmental Resources on October 28, 1983. All PSD permit applications and requests for modifications thereto should be submitted to: Pennsylvania Department of Environmental Resources, Bureau of Air Quality Control, 200 North Third Street, Harrisburg, PA 17120, ATTN: Abatement and Compliance Division.

[49 FR 33128, Aug. 21, 1984]

§ 52.2059 Control strategy: Particulate matter.

(a) Pennsylvania has committed to undertake a comprehensive program to investigate non-traditional sources, industrial process fugitive particulate emissions, alternative control measures, and to develop and implement an effective control program to attain the primary and secondary NAAQS for particulates. The schedule for this study is as follows:

SCHEDULE FOR INVESTIGATING AND CONTROLLING NONTRADITIONAL PARTICULATE MATTER EMISSIONS

Task	Completion date
Scheduled tasks:	
1. Quantify nontraditional sources	June 1, 1980.
2. Investigate control techniques	Apr. 1, 1982.
3. Investigate source-receptor relationship.	June 1, 1980.
Analysis and control strategy development:	
1. Analyze Nonattainment Areas	July 1, 1981.
2. Develop Control Strategies	Jan. 1, 1982.
3. Develop, Adopt, Submit SIP	July 1, 1982.
4. Implement SIP	Begin—7/1/82.

[45 FR 33628, May 20, 1980]

§ 52.2060 Small Business Assistance Program.

On February 1, 1993, the Secretary of the Pennsylvania Department of Environmental Resources submitted a plan for the establishment and implementation of the Small Business Assistance Program as a state implementation plan (SIP) revision, as required by Title V of the Clean Air Act Amendments. EPA approved the Small Business Assistance Program on March 6, 1995, and made it part of the Pennsylvania SIP. As with all components of the SIP, Pennsylvania must implement the program as submitted and approved by EPA.

[60 FR 1741, Jan. 5, 1995]

Subpart OO—Rhode Island

§ 52.2070 Identification of plan.

(a) Title of plan: ''Plan for Implementation, Maintenance and Enforcement of National Primary and Secondary Ambient Air Quality Standards in the Metropolitan Providence Interstate Air Quality Control Region'' for the State of Rhode Island.

(b) The plan was officially submitted on January 28, 1972.

(c) The plan revisions listed below were submitted on the dates specified.

(1) Notice of public hearing submitted on February 9, 1972, by the Rhode Island Department of Health.

(2) Miscellaneous non-regulatory additions to the plan correcting minor deficiencies submitted on February 29, 1972, by the Rhode Island Department of Health.

(3) Regulation 12 requiring prevention and control of air pollution from incinerators submitted on March 7, 1973, by the Rhode Island Department of Health.

(4) Regulation 13 requiring prevention and control of air pollution from fuel burning equipment submitted on March 19, 1973, by the Rhode Island Department of Health.

(5) Compliance schedules submitted on April 24, 1973, by the Rhode Island Department of Health.

(6) Revisions to Regulation 10, Air Pollution Episodes, submitted on January 25, 1974, by the Rhode Island Department of Health.

(7) AQMA identifications submitted on April 11, 1974, by the Rhode Island Department of Health.

(8) Revision to Regulation 8, Limitation of Sulfur in Fuels, submitted on May 22, 1974, by the Rhode Island Department of Health.

(9) Letter identifying Metropolitan Providence as an AQMA submitted on September 6, 1974, by the Governor.

(10) Revision to Regulation 14, Source Recordkeeping and Reporting, submitted on September 5, 1973, by the Rhode Island Department of Health.

(11) A comprehensive air quality monitoring plan, intended to meet requirements of 40 CFR part 58, was submitted by the Rhode Island Department of Environmental Management Director on January 8, 1980.

(12) Attainment plans to meet the requirements of Part D of the Clean Air Act, as amended in 1977, were submitted on May 14, 1979, June 11, 1979, August 13, 1979, January 8, January 24, March 10, March 31, April 21, June 6, June 13, August 20, November 14, March 4, March 5, and April 16, 1981. Included are plans to attain the carbon monoxide and ozone standards and information allowing for the redesignation of Providence to non-attainment for the primary TSP standard based on new data. A program was also submitted for the review of construction and operation of new and modified major stationary sources of pollution in non-attainment areas. Certain miscellaneous provisions unrelated to Part D are also included.

(13) A revision to Regulation 8, ''Sulfur Content in Fuels,'' for the Narragansett Electric Company, Providence, submitted on August 28, 1980 by the Director of the Department of Environmental Management.

(14) A revision to Regulation 8, ''Limitation of Sulfur in Fuels,'' submitted on January 30, 1981, by the Director of the Rhode Island Division of Air Resources allowing Bradford Dyeing Association, Westerly, to burn higher sulfur fuel oil, temporarily.

(15) Revisions for Group II CTGs: Storage of Petroleum Liquids—External Floating Roof Vessels (Regulation 11.6); and revisions to existing regulations: Stage I Vapor Controls (Regulation 11.5), Hazardous Waste Incinerators (Regulation 12.7.1), and Control of Solvent Metal Cleaning Emissions (Regulation 18) were submitted on January 9, July 23, and August 17, 1981.

(16) Variances from Regulations 8, ''Sulfur Content in Fuels'' and 13, ''Particulate Emissions from Fossil Fired Steam or Hot Water Generating Units'', for Kenyon Piece Dye Works, Richmond, submitted on July 1, 1982.

(17) Revisions to Regulations 8, ''Sulfur Content of Fuels'' and 13, ''Particulate Emissions from Fossil Fuel Fired Steam or Hot Water Generating Units'' were submitted on November 9, 1982 by the Division of Air and Hazardous Materials.

(18) Revisions to Air Pollution Control Regulation Number 9, Approval to Construct, Install, Modify, or Operate (except to subsection 9.1.1), and Section VI, Part II, ''Stationary Source Permitting and Enforcement'' of the narrative as submitted by the Department of Environmental Management on May 14, 1982 and July 1, 1982 for review of new major sources and major modifications in nonattainment areas. Also included are revisions to add rules for banking emission reductions.

(19) Revisions to the Rhode Island State Implementation Plan for attainment of the primary National Ambient Air Quality Standard for ozone as submitted on May 14, 1982; July 1, 1982; July 7, 1982; October 4, 1982 and March 2, 1983 by the Department of Environmental Management. Also included are generic bubble rules which provide for regulatory flexibility for VOC sources subject to RACT requirements under Regulations 15, 19 and 21 of the Rhode Island SIP

(20) Revisions to attain and maintain the lead NAAQS as submitted on July 7, 1983 by the Department of Environmental Management.

(21) The permit issued to the University of Rhode Island in Kingston approving a three-year bubble to control sulfur dioxide emissions. The Rhode Island Department of Environmental Management issued the permit in accordance with Regulation 8, §8.3.2, ''Emissions Bubbling'' and submitted it to EPA as a SIP revision on January 16, 1984.

(22) Revisions to Regulation 9, ''Approval to Construct, Install, Modify or Operate'', and Section VI, Part II of the associated narrative of the Rhode Island SIP, to incorporate the requirements for the Prevention of Significant Deterioration of 40 CFR 51.24, permitting major stationary sources of lead and other miscellaneous changes as submitted on February 6, 1984 by the Rhode Island Department of Environmental Management. Clarifying letters dated January 27, 1984 and June 6, 1984.

(23) Revisions to Air Pollution Control Regulation 8, ''Sulfur Content of Fuels,'' submitted on July 19, 1983,

specifying maximum sulfur-in-coal limits (1.21 lbs/MMBtu on a 30-day rolling average and 2.31 lbs/MMBtu on a 24-hour average) for the Narragansett Electric Company South Street Station in Providence. These revisions approve Section 8.3.4, ''Large Fuel Burning Devices Using Coal,'' for South Street Station only.

(24) Revisions to the State Implementation Plan were submitted by the Rhode Island Department of Environmental Management on May 28, 1985 and October 15, 1985.

(i) Incorporation by reference. (A) Amendments to Regulation 8, ''Sulfur Content of Fuels'' at 8.4.1(b) requiring owners/operators of fuel burning sources to have a sampling valve in the fuel line to the boiler to facilitate fuel sampling, amended on May 2, 1985.

(B) Amendments to Regulation 9, ''Approval to Construct, Install, Modify, or Operate'' requiring best available control technology (BACT) for each air pollutant emitted when permitting all new stationary sources and modifications not otherwise subject to lowest achievable emission rate (LAER) requirements under Rhode Island's approved new source review plan. The amended sections are 9.1.9, 9.1.14, 9.1.21, 9.1.22, 9.1.33, 9.1.36, 9.3.1, 9.3.3, 9.5.3, and 9.13.1. Regulation 9 was incorporated by reference in its present form on July 6, 1984 at paragraph (c)(22), above. The entire Regulation is being reincorporated by reference here to maintain consistency in the numbering and format, amended May 2, 1985.

(ii) October 15, 1985 letter from Rhode Island DEM to EPA which commits to implement the stack height related requirements of Regulation 9 in accordance with the Stack Height regulations at 40 CFR part 51, subpart B.

(25) A revision submitted on December 16, 1985 and January 23, 1986 allowing the burning of 2.2% sulfur content fuel oil at the Seville Dyeing Corporation facility in Woonsocket, Rhode Island for a period of up to 30 months, commencing on August 1, 1986, the savings from which will be used to pay for permanent energy conservation measures to reduce on-site consumption of petroleum products by at least 50,000 gallons per year (estimated 250,000 gallons per year).

(i) Incorporation by reference.

(A) Letter from Doug L. McVay, Principal Engineer, to Seville Dyeing Corporation, dated December 16, 1985 allowing the temporary use of less expensive 2.2% sulfur fuel oil until February 1, 1989. At the end of the temporary use period, Seville Dyeing Corporation will return to the use of 1.0% sulfur fuel oil. The particulate emission rate for the facility will not exceed 0.15 lbs per million Btu.

(B) Letter to Louis F. Gitto, Director of Air Management Division, EPA Region I from Thomas D. Getz, Director of Air & Hazardous Materials, RI DEM dated January 23, 1986; subject: Response to EPA questions regarding Seville Dyeing Corporation, and outline of the permanent energy conservation measures to be used.

(26) Revisions submitted on November 5, 1985, June 16, 1986 and November 3, 1986 by the Rhode Island Department of Environmental Management (DEM) consisting of an administrative consent agreement between the DEM's Division of Air and Hazardous Materials and Whitman Products Limited (now James River Corporation's Decorative Product Division) in Johnston, Rhode Island. When the consent agreement expires on December 31, 1986, James River Corporation will be subject to the emission limits in Rhode Island Regulation No. 19, subsection 19.3.1.

(i) Incorporation by reference.

(A) An administrative consent agreement between the Rhode Island and Providence Plantation Department of Environmental Management and Whitman Products Limited. The consent agreement became effective on May 29, 1985.

(B) Letters of June 16, 1986 and September 17, 1985 from the Department of Environmental Management to EPA.

(ii) Additional material.

(A) Letter submitted on November 3, 1986 affirming that a sufficient growth margin exists, below the level of emissions necessary to show attainment of the national ambient air quality standard for ozone in Rhode Island, to absorb the increased emissions resulting from this compliance date extension.

(27) Revision submitted on November 5, 1985 by the Rhode Island Department of Environmental Management consisting of an administrative consent agreement defining reasonably available control technology for Stanley Bostitch (formerly Bostitch Division

(i) Incorporation by reference.

(A) An administrative consent agreement between the Rhode Island Department of Environmental Management and Bostitch Division of Textron. The consent agreement became effective on June 6, 1985 and requires Bostitch Division of Textron to reformulate certain solvent-based coatings to low/no solvent formulations by December 31, 1986.

(B) A letter to Bostitch Division of Textron from the Rhode Island Department of Environmental Management dated September 20, 1985 which serves as an addendum to the consent agreement. The addendum defines the emission limitations which Bostitch's Division of Textron reformulated coatings must meet.

(28) Revision submitted on November 5, 1985 by the Rhode Island Department of Environmental Management consisting of an administrative consent agreement granting a final compliance date extension for the control of organic solvent emissions from sixpaper coating lines at Keene Corporation in East Providence, Rhode Island.

(i) Incorporation by reference.

(A) Letter from the Rhode Island Department of Environmental Management dated November 5, 1985 submitting revisions to the Rhode Island State Implementation Plan.

(B) An administrative consent agreement between the Rhode Island Department of Environmental Management and Keene Corporation, effective on September 12, 1985.

(29) Revisions submitted on November 5, 1985, February 21, 1986, April 15, 1987 and May 14, 1987 by the Rhode Island Department of Environmental Management consisting of an administrative consent agreement defining alternative reasonably available control technology for Kenyon Industries in Kenyon, Rhode Island.

(i) Incorporation by reference.

(A) Letter from the State of Rhode Island and Providence Plantations dated April 15, 1987 submitting revisions for Kenyon Industries to the Rhode Island State Implementation Plan.

(B) An administrative consent agreement between the State of Rhode Island and Providence Plantations Department of Environmental Management and Kenyon Industries, Inc., signed on December 31, 1986.

(ii) Additional material.

(A) A letter dated May 14, 1987 from the Department of Environmental Management containing technical support demonstrating that the revised consent agreement is at least as stringent as the consent agreement between the Rhode Island Department of Environmental Management and Kenyon effective in Rhode Island May 13, 1985.

(B) Original consent agreement between the Rhode Island Department of Environmental Management and Kenyon effective on May 13, 1985 submitted to EPA on November 5, 1985.

(C) Letter dated February 21, 1986 from Rhode Island describing required recordkeeping for Kenyon.

(30) Revisions to the State Implementation Plan were submitted by Rhode Island Department of Environmental Management on February 27, 1987. These revisions were effective as of January 20, 1987 in the State of Rhode Island.

(i) Incorporation by reference.

(A) Letter from the Rhode Island Department of Environmental Management dated February 27, 1987 submitting revisions to the Rhode Island State Implementation Plan.

(B) Amendment to Air Pollution Control Regulation No. 11, at subsection 11.4.5 adopted on January 20, 1987 in Rhode Island.

(C) Amendment to Air Pollution Control Regulation No. 19, at subsection 19.7.1 adopted on January 20, 1987 in Rhode Island.

(D) Amendment to Air Pollution Control Regulation No. 21, at subsection 21.6.1 adopted on January 20, 1987 in Rhode Island.

(31) [Reserved]

(32) Revisions submitted on May 6, 1987, October 15, 1987, and January 4, 1988 by the Rhode Island Department of Environmental Management consisting

of an administrative consent agreement which defines and imposes RACT to control volatile organic comp

(i) Incorporation by reference.

(A) An administrative consent agreement (86–12–AP), except for Provisions 7 and 8, between the Rhode Island Department of Environmental Management and Tech Industries effective June 12, 1986.

(B) An addendum to the administrative consent agreement (86–12–AP) between the Rhode Island Department of Environmental Management and Tech Industries. The addendum was effective November 24, 1987.

(C) Letters dated May 6, 1987; October 15, 1987; and January 4, 1988 submitted to the Environmental Protection Agency by the Rhode Island Department of Environmental Management.

(33) Revisions to federally approved Air Pollution Control Regulation Number 11 submitted on November 7, 1988 and April 24, 1989 by the Rhode Island Department of Environmental Management, limiting the volatility of gasoline from May 1 through September 15, beginning 1989 and continuing every year thereafter, including any waivers to such limits Rhode Island may grant. In 1989, the control period will begin on June 30.

(i) Incorporation by reference.

(A) Amendments to Rhode Island Air Pollution Control Regulation No. 11, effective July 5, 1979, entitled, ''Petroleum Liquids Marketing and Storage,'' sections 11.7.1 filed with the Secretary of State of Rhode Island on August 11, 1988, and effective in the State of Rhode Island on August 31, 1988.

(B) Amendments to Rhode Island Air Pollution Control Regulation No. 11, effective July 5, 1979, entitled, ''Petroleum Liquids Marketing and Storage,'' amendmends to section 11.7.2 filed with the Secretary of State of Rhode Island on April 27, 1989, and effective in the State of Rhode Island on May 17, 1989.

(34) Revisions to the State Implementation Plan submitted by the Rhode Island Department of Environmental Management on April 28, 1989, approving a renewal of a sulfur dioxide bubble for the University of Rhode Island originally approved at paragraph (c)(21), of this section.

(i) Incorporation by reference.

(A) A renewal of an emissions bubble for the University of Rhode Island effective December 26, 1986.

(35) Revisions to the State Implementation Plan submitted by the Rhode Island Department of Environmental Management on April 26, 1990, which define and impose RACT to control volatile organic compound emissions from Providence Metallizing in Pawtucket, Rhode Island.

(i) Incorporation by reference.

(A) Letter from the Rhode Island Department of Environmental Management dated April 26, 1990, submitting a revision to the Rhode Island State Implementation Plan.

(B) An administrative consent agreement (87–2–AP) between the Rhode Island Department of Environmental Management and Providence Metallizing effective July 24, 1987.

(C) An amendment to the administrative consent agreement (87–2–AP) between the Rhode Island Department of Environmental Management and Providence Metallizing effective May 4, 1989.

(D) An addendum to the administrative consent agreement (87–2–AP) between the Rhode Island Department of Environmental Management and Providence Metallizing effective April 24, 1990.

(ii) Additional materials.

Nonregulatory portions of the State submittal.

(36) Revisions to the State Implementation Plan submitted by the Rhode Island Department of Environmental Management on May 24, 1990, which define and impose RACT to control volatile organic compound emissions from Tillotson-Pearson in Warren, RhodeIsland.

(i) Incorporation by reference.

(A) Letter from the Rhode Island Department of Environmental Management dated May 24, 1990 submitting a revision to the Rhode Island State Implementation Plan.

(B) An Administrative consent agreement (90–1–AP) between the Rhode Island Department of Environmental Management and Tillotson-Pearson effective June 5, 1990.

(37) Revisions to the State Implementation Plan submitted by the Rhode Island Department of Environmental

Management dated November 3, 1989, November 21, 1989, February 1, 1990 and September 19, 1990.

(i) Incorporation by reference. (A) Letters from the Rhode Island Department of Environmental Management dated November 3, 1989, November 21, 1989, February 1, 1990 and September 19, 1990 submitting revisions to the Rhode Island State ImplementationPlan.

(B) Amendments to Rhode Island's Air Pollution Control Regulation Number 6, amended and effective November 22, 1989.

(C) Amendments to Rhode Island's Air Pollution Control Regulation Numbers 11; 15, excluding subsections 15.1.16 and 15.2.2; 18, excluding subsections 18.1.8, 18.2.1, 18.3.2(d), 18.3.3(f), and 18.5.2; 19, excluding subsections 19.1.11, 19.2.2, and 19.3.2(a); and 21, except subsections 21.1.15 and 21.2.2, and portion of subsection 21.5.2(h) which states ''equivalent to'' in the parenthetical, amended and effective December 10, 1989.

(38) Revisions to the State Implementation Plan submitted by the Rhode Island Department of Environmental Management on May 22, 1991.

(i) Incorporation by reference.

(A) Letter from the Rhode Island Department of Environmental Management dated May 22, 1991 submitting a revision to the Rhode Island State Implementation Plan.

(B) Section 9.1.36 ''baseline concentration,'' section 9.1.39 ''increment,'' section 9.1.40 ''major source baseline date,'' section 9.1.42 ''minor source baseline date,'' section 9.1.43 ''net emissions increase,'' and section 9.15.1(c)(5)—exclusion from NO_2 increments due to SIP-approved temporary increases of emissions, of the Rhode Island Air Pollution Control Regulation No. 9 entitled ''Approval to Construct, Install, Modify or Operate,'' effective in the State on May 20, 1991.

(ii) Additional materials,

(A) Nonregulatory portions of the state submittal.

(39) Revisions to the State Implementation Plan submitted by the Rhode Island Department of Environmental Management on January 12, 1993.

(i) Incorporation by reference.

(A) Letter from the Rhode Island Department of Environmental Management, dated January 12, 1993, submitting a revision to the Rhode Island State Implementation Plan.

(B) Rhode Island Department of Environmental Protection, Division of Air and Hazardous Materials, Air Pollution Control Regulation No. 11, entitled ''Petroleum Liquids Marketing Storage,'' submitted to the Secretary of State on January 11, 1993.

(C) Letter from the Rhode Island Department of Environmental Protection, dated February 10, 1993, stating that Regulation No. 11 became effective on January 31, 1993, 20 days after being filed with the Secretary of State.

(ii) Additional materials.

(A) Nonregulatory portions of the submittal.

(40) Revisions to the State Implementation Plan submitted by the Rhode Island Department of Environmental Management on November 13, 1992.

(i) Incorporation by reference.

(A) Letter from the Rhode Island Department of Environmental Management dated November 13, 1992 submitting a revision to the Rhode Island State Implementation Plan.

(B) Rhode Island Department of Environmental Protection, Division of Air and Hazardous Materials, Air Pollution Control Regulations No. 19, entitled ''Control of Volatile Organic Compounds from Surface Coating Operations,'' submitted to the Secretary of State on October 30, 1992 and effective on November 20, 1992.

(C) Rhode Island Department of Environmental Protection, Division of Air and Hazardous Materials, Air Pollution Control Regulations No. 25, entitled ''Control of Volatile Organic Compound Emissions from Cutback and Emulsified Asphalt,'' submitted to the Secretary of State on October 30, 1992 and effective on November 20, 1992.

(D) Rhode Island Department of Environmental Protection, Division of Air and Hazardous Materials, Air Pollution Control Regulations No. 26, entitled ''Control of Organic Solvent Emissions from Manufacture of Synthesized Pharmaceutical Products,'' submitted to the Secretary of State on October 30, 1992 and effective on November 20, 1992.

(ii) Additional materials.

(A) Letter from the Rhode Island Department of Environmental Protection, dated February 10, 1993, clarifying the November 13, 1992 revision to the SIP.

(B) Nonregulatory portions of the submittal.

(41) Revisions to the State Implementation Plan submitted by the Rhode Island Department of Environmental Management on March 11, 1993.

(i) Incorporation by reference.

(A) Letter from the Rhode Island Department of Environmental Management dated March 5, 1993 submitting a revision to the Rhode Island State Implementation Plan.

(B) Rhode Island's Air Pollution Control Regulation No. 9 entitled, ''Air Pollution Control Permits,'' except for Chapter 9.13, Application for an Air Toxics Operating Permit; Chapter 9.14, Administrative Action: Air Toxics Operating Permits; and Chapter 9.15, Transfer of an Air Toxics Operating Permit; and Appendix A, Toxic Air Pollutants, Minimum Quantities. This regulation was effective in the State of Rhode Island on March 24, 1993.

(ii) Additional materials.

(A) A fact sheet on the proposed amendments to Regulation No. 9 entitled, ''Approval to Construct, Install, Modify or Operate''.

(B) Nonregulatory portions of the State submittal.

(42) Revisions to the State Implementation Plan submitted by the Rhode Island Department of Environmental Management on January 12, 1993.

(i) Incorporation by reference.

(A) Letter from the Rhode Island Department of Environmental Management dated January 12, 1993 submitting a revision to the Rhode Island State Implementation Plan.

(B) Revisions to Air Pollution Control Regulation No. 14, ''Record Keeping and Reporting,'' filed with the Secretary of State on January 11, 1993 and effective in the State of Rhode Island on January 31, 1993.

(ii) Additional materials.

(A) Nonregulatory portions of the submittal.

(43) Revisions to the State Implementation Plan submitted by the Rhode Island Department of Environmental Management on March 15, 1994.

(i) Incorporation by reference.

(A) Letter from the Rhode Island Department of Environmental Management dated March 15, 1994 submitting a revision to the Rhode Island State Implementation Plan.

(B) Rhode Island Department of Environmental Management, Division of Air Resources, Air Pollution Control Regulation No. 32, ''Control of Volatile Organic Compounds from Marine Vessel Loading Operations'' effective in the State of Rhode Island on March 31, 1994, with the exception of Section 32.2.2 which Rhode Island did not submit as part of the SIP revision.

(ii) Additional materials.

(A) Nonregulatory portions of the submittal.

(44) Revisions to the State Implementation Plan submitted by the Rhode Island Department of Environmental Management on June 27, 1995.

(i) Incorporation by reference.

(A) Letter from the Rhode Island Department of Environmental Management dated June 27, 1995 submitting a revision to the Rhode Island State Implementation Plan.

(B) The following portions of the Rules Governing the Control of Air Pollution for the State of Rhode Island effective on July 17, 1995: Air Pollution Control Regulation No. 30, Control of Volatile Organic Compounds from Automotive Refinishing Operations.

(45) Revisions to the State Implementation Plan submitted by the Rhode Island Department of Environmental Management on May 15, 1995

(i) Incorporation by reference.

(A) Letter from the Rhode Island Department of Environmental Protection dated May 15, 1995 submitting a revision to the Rhode Island State Implementation Plan.

(B) Air Pollution Control Regulation 29.3 ''Emissions Caps''; effective in the State of Rhode Island on May 18, 1995.

(ii) Additional materials.

(A) Non-regulatory portions of the submittal.

[37 FR 10891, May 31, 1972]

EDITORIAL NOTE: For FEDERAL REGISTER citations affecting § 52.2070, see the List of CFR Sections Affected in the Finding Aids section of this volume.

§52.2071 Classification of regions.

The Rhode Island plan was evaluated on the basis of the following classifications:

Air quality control region	Pollutant				
	Particulate matter	Sulfur oxides	Nitrogen dioxide	Carbon monoxide	Ozone
Metropolitan Providence Interstate	I	I	III	I	I

[37 FR 10891, May 31, 1972, as amended at 38 FR 34325, Dec. 13, 1973; 39 FR 16347, May 8, 1974; 46 FR 25460, May 7, 1981]

§52.2072 Approval status.

With the exceptions set forth in this subpart, the Administrator approves Rhode Island's plan, as identified in §52.2070 of this subpart, for the attainment and maintenance of the national standards under section 110 of the Clean Air Act. Furthermore, the Administrator finds the plan satisfies all requirements of Part D, Title I, of the Clean Air Act, as amended in 1977, except as noted below. In addition, continued satisfaction of the requirements of Part D for the ozone portion of the SIP depends on the adoption and submittal of RACT requirements by January 1, 1981 for the sources covered by CTGs issued between January 1978 and January 1979 and adoption and submittal by each subsequent January as additional RACT requirements for sources covered by CTGs issued by the previous January.

[46 FR 25460, May 7, 1981]

§52.2073 General requirements.

(a) The requirements of §51.116(c) of this chapter are not met since the plan does not provide for public availability of emission data.

(b) Regulation for public availability of emission data.

(1) Information obtained from owner or operators of stationary sources pursuant to §52.2075 will be correlated with applicable emission limitations and other control regulations and will be made available for public inspection at the Rhode Island Department of Health, 204 Health Building, Providence, RI.

[37 FR 10891, May 31, 1972, as amended at 41 FR 2232, Jan. 15, 1976; 51 FR 40676, Nov. 7, 1986]

§52.2074 Legal authority.

(a) The requirements of §51.230(e) of this chapter are not met. Authority to require recordkeeping is deficient to the extent that section 23–25–13 requires only those sources with an air pollution control program to keep records.

(b) The requirements of §51.230(f) of this chapter are not met. Authority to release emission data to the public is deficient in that section 23–25–6 requires that only records concerning investigations be available to the public. Further, section 23–25–5(g) and section 23–25–13 may limit the State's authority to release emission data. Authority to require sources to install and maintain monitoring equipment is not provided and is therefore inadequate. Authority to require sources to periodically report is not provided and is therefore inadequate.

[37 FR 10891, May 31, 1972, as amended at 39 FR 7283, Feb. 25, 1974; 39 FR 12350, Apr. 5, 1974; 51 FR 40676, Nov. 7, 1986]

§52.2075 Source surveillance.

(a) The requirements of §51.211 of this chapter are not met since the plan lacks adequate legal authority to require owners or operators of stationary sources to maintain records of, and periodically report information as may

be necessary to enable the state to determine whether such sources are in compliance with applicable portions of the control strategy.

(b) Regulation for source recordkeeping and reporting.

(1) The owner or operator of all stationary sources which have the potential to emit a total of 100 tons or more per year of any one air contaminant for which there is a national standard shall maintain records of, and submit to the Director, data on operational processes, fuel usage, emission, stack parameters, boiler capacities, types of equipment generating air contaminants and air contaminant control devices that may be necessary to determine if the source is in compliance with applicable rules and regulations of the Department. Upon notification of the Administrator, or the Director of the Rhode Island Department of Health, sources with the potential to emit less than 100 tons per year of any air contaminant shall also be subject to the requirements of this paragraph. For the purposes of this paragraph, potential emissions shall be calculated at the design load assuming no control equipment is in use and fuel having a sulfur content of 2.2 percent by weight (dry basis) is being burned.

(2) The information recorded by the owner or operator of a stationary source shall be summarized and reported to the Director of the Department of Health on forms furnished by him. They shall be submitted within 30 days following the end of the reporting period. Reporting periods are January 1 to June 30 and July 1 to December 31.

(3) Information recorded by the owner or operator and copies of the summarizing reports submitted to the Director shall be retained by the owner or operator for two years after the date on which the pertinent report is submitted.

[41 FR 2232, Jan. 15, 1976, as amended at 51 FR 40677, Nov. 7, 1986]

§ 52.2076 Attainment of dates for national standards.

The following table presents the latest dates by which the national standards are to be attained. These dates reflect the information presented in Rhode Island's plan, except where noted.

Air quality control region [1]	Pollutant				NO_2	CO	O_3
	TSP		SO_2				
	Primary	Secondary	Primary	Secondary			
Providence	a	d	a	b	a	c	c
E. Providence	a	b	a	b	a	a	c
Cranston	a	b	a	b	a	a	c
Warwick	a	b	a	b	a	a	c
N. Providence	a	b	a	b	a	a	c
Pawtucket	a	b	a	b	a	a	c
Central Falls	a	b	a	b	a	a	c
Remainder of Rhode Island portion of AQCR 120.	a	b	a	b	a	a	c

a. Air quality levels presently better than primary standards or area is unclassifiable.
b. Air quality levels presently better than secondary standards or area is unclassifiable.
c. December 31, 1982.
d. Attainment date not established.

[1] Sources subject to plan requirements and attainment dates established under section 110(a)(2)(A) prior to the 1977 Clean Air Act Amendments remain obligated to comply with those requirements by the earlier deadlines. The earlier attainment dates are set out at 40 CFR 52.2076 (1978).

[50 FR 52461, Dec. 24, 1985]

§ 52.2078 Enforcement.

(a) Sections 23–25–5(h) and 23–25–8(a) of the General Laws of Rhode Island are disapproved insofar as they permit the Rhode Island Director of the Department of Health to issue abatement orders (1) that defer compliance with plan requirements beyond the dates required for attainment of the national standards, (2) without the approval of the Administrator, and (3) for reasons not permitted by the Clean Air Act.

(b) Regulation limiting administrative abatement orders. (1) No order deferring compliance with a requirement

of the Rhode Island Implementation Plan shall be issued by the Director of the Department of Health which does not meet the following requirements:

(i) An order must require compliance with the plan requirement within the times and under the conditions specified in §51.261 (a) and (b) of this chapter.

(ii) An order may not defer compliance beyond the last date permitted by section 110 of the Act for attainment of the national standard which the plan implements unless the procedures and conditions set forth in section 110(f) of the Act are met.

(iii) An order shall not be effective until it has been submitted to and approved by the Administrator in accordance with §§51.104, 51.105, 51.261 and 51.262(a).

(2) Notwithstanding the limitations of paragraph (b)(1)(ii) of this section, an order may be granted which provides for compliance beyond the statutory attainment date for a national standards where compliance is not possible because of breakdowns or malfunctions of equipment, acts of God, or other unavoidable occurrences. However, such order may not defer compliance for more than three (3) months unless the procedures and conditions set forth in section 110(f) of the Act are met.

[38 FR 18879, 18880, July 16, 1973, as amended at 38 FR 30878, Nov. 8, 1973; 51 FR 40675, 40676, 40677, Nov. 7, 1986]

§52.2079 Requirements for state implementation plan revisions relating to new motor vehicles.

Rhode Island must comply with the requirements of §51.120.

[60 FR 4738, Jan. 24, 1995]

§52.2080 Revisions.

(a) The revision procedures of the Rhode Island plan are not adequate since the plan does not expressly provide for revisions at the times and under the conditions set forth in §51.104 of this chapter.

(b) Regulation for plan revisions. (1) The Rhode Island implementation plan shall be revised:

(i) When necessary to take account of a revision of the national primary or secondary ambient air quality standard which it implements;

(ii) When improved or more expeditious methods of attaining a national standard which it implements become available;

(iii) When the Administrator finds that the plan is substantially inadequate to attain or maintain the national standard which it implements and issues notice of such finding pursuant to §51.104 of this chapter.

(2) The Rhode Island implementation plan may be revised from time to time to the extent such revisions are consistent with the requirements applicable to implementation plans set forth in this chapter and the Act.

(3) No revisions shall be effective until the hearing requirements of §51.102 of this chapter have been satisfied.

[38 FR 18879, 18880, July 16, 1973, as amended at 38 FR 30878, Nov. 8, 1973; 51 FR 40675, Nov. 7, 1986]

§52.2081 EPA-approved EPA Rhode Island state regulations.

The following table identifies the State regulations which have been approved by EPA and incorporated by reference into the Rhode Island State Implementation Plan. This table is for informational purposes only and does not have any independent regulatory requirements for a specific situation consult the plan identified in §52.2070. To the extent that this table conflicts with §52.2070, §52.2070 governs.

TABLE 52.2081—EPA-APPROVED RULES AND REGULATIONS

State citation	Title/subject	Date adopted by State	Date approved by EPA	FR citation	52.2070	Comments/Unapproved sections
	Air pollution control regulation.					
No. 1	Visible emissions	8/02/67	5/31/72	37 FR 10842	(b)	

TABLE 52.2081—EPA-APPROVED RULES AND REGULATIONS—Continued

State citation	Title/subject	Date adopted by State	Date approved by EPA	FR citation	52.2070	Comments/Unapproved sections
		2/28/72	5/31/72	37 FR 10842	(b)	
		2/22/77	5/07/81	46 FR 25446	(c)(12)	
No. 2	Handfiring of soft coal	8/02/67	5/31/72	37 FR 10842	(b)	
		2/28/72	5/31/72	37 FR 10842	(b)	
		2/22/77	5/07/81	46 FR 25446	(c)(12)	
No. 3	Particulate emissions from industrial processes.	8/02/67	5/31/72	37 FR 10842	(b)	
		2/28/72	5/31/72	37 FR 10842	(b)	
		2/22/77	5/07/81	46 FR 25446	(c)(12)	
No. 4	Open fires	8/02/67	5/31/72	37 FR 10842	(b)	
		10/01/71	5/31/72	37 FR 10842	(b)	
		2/22/77	5/07/81	46 FR 25446	(c)(12)	
No. 5	Fugitive dust	8/02/67	5/31/72	37 FR 10842	(b)	
		2/22/77	5/07/81	46 FR 25446	(c)(12)	
No. 6	Opacity monitors	8/02/67	5/31/72	37 FR 10842	(b)	
		2/22/77	5/07/81	46 FR 25446	(c)(12)	
		11/22/89	9/30/91	56 FR 49416	(c)(37)	Amended Regulation No. 6.
No. 7	Emission of air contaminants detrimental to persons or property.	8/02/67	5/31/72	37 FR 10842	(b)	
		7/19/77	5/07/81	46 FR 25446	(c)(12)	
No. 8	Sulfur content of fuels	10/01/71	5/31/72	37 FR 10842	(b)	
		5/28/74	11/03/75	40 FR 51044	(c)(8)	
		.....	1/21/81	46 FR 5980	(c)(13)	Narragansett Electric Bubble.
		2/22/77	5/07/81	46 FR 25446	(c)(12)	
		.....	12/30/81	46 FR 63043	(c)(14)	Temporary Relaxation for Bradford Dye.
		.....	11/10/82	47 FR 50866	(c)(16)	Temporary Relaxation for Kenyon Piece Dye Works.
		10/05/82	3/29/83	48 FR 13027	(c)(17)	Conversion/Conservation Incentive/Bubble.

TABLE 52.2081—EPA-APPROVED RULES AND REGULATIONS—Continued

State citation	Title/subject	Date adopted by State	Date approved by EPA	FR citation	52.2070	Comments/Unapproved sections
		5/15/84	49 FR 20493	(c)(21)	URI Bubble..	
		8/29/83	7/27/84	49 FR 30177	(c)(23)	Narragansett Electric (South Street).
		5/02/85	1/8/86	51 FR 756	(c)(24)	Requires sampling valve.
		12/16/85	8/1/86	51 FR 27538	(c)(25)	Temporary relaxation for Seville Dyeing Corporation in Woon-socket.
		3/17/87	9/19/89	54 FR 38518	(c)(34)	URI bubble renewal.
No. 9	Approval to construct, modify or operate.	10/03/71	5/31/72	37 FR 10842	(b)	
		2/22/77	5/07/81	46 FR 25446	(c)(12)	
		4/12/81	5/07/81	46 FR 25446	(c)(12)	No action on 9.2.3(b) and 9.12.
		4/05/82	6/28/83	48 FR 29690	(c)(18)	NSR fully approved, 9.12 Emission Banking approved.
		2/13/84	7/6/84	49 FR 27749	(c)(22)	PSD fully approved, 9.2.3(b) approved.
		5/02/85	1/8/86	51 FR 756	(c)(24)	Additional BACT requirements.
		5/20/91	10/7/91	56 FR 50516	(c)(38)	Addition of PSD NO_2 increments.
No. 9	Air Pollution Control Permits.	3/4/93	2/6/96	61 FR 4356	(c)(41)	Addition of NSR and other CAAA requirements under Amended Regulation No. 9 except for Chapters 9.13, 9.14, 9.15, and Appendix A.
No. 10 ...	Air pollution episodes	2/28/72	5/31/72	37 FR 10842	(b)	
		10/11/75	11/03/75	40 FR 51043	(c)(6)	
		2/22/77	5/07/81	46 FR 25446	(c)(12)	
No. 11 ...	Petroleum liquids marketing and storage.	2/22/77	5/07/81	46 FR 25446	(c)(12)	
		7/05/79	5/07/81	46 FR 25446	(c)(12)	
		4/22/81	4/26/82	47 FR 17817	(c)(15)	
		1/20/87	9/1/87	52 FR 32920	(c)(30)	Amended Regulation No. 11, Subsection 11.4.5.

TABLE 52.2081—EPA-APPROVED RULES AND REGULATIONS—Continued

State citation	Title/subject	Date adopted by State	Date approved by EPA	FR citation	52.2070	Comments/Unapproved sections
		11/07/88, 04/24/89	6/2/89	54 FR 23661	(c)(33)	Approves a limitation on volatility of gasoline from June 30 to Sept. 15, 1989, and May 1 to Sept. 15 in subsequent years at Subsections 11.7.1 and 11.7.2.
		12/10/89	9/30/91	56 FR 49416	(c)(37)	Amended Regulation No. 11.
		1/11/93	12/17/93	58 FR 65933	(c)(39)	Regulation revised to add new Stage II vapor recovery requirements.
No. 12 ...	Incinerators	2/28/72	6/22/73	38 FR 16351	(c)(3)	
		2/22/77	5/07/81	46 FR 25446	(c)(12)	
		4/22/81	4/26/82	47 FR 17817	(c)(15)	
No. 13 ...	Particulate emissions from fossil fuel fired steam or hot water generating units.	1/17/73	10/23/73	38 FR 29296	(c)(14)	
		2/22/77	5/07/81	46 FR 25446	(c)(12)	
		7/05/79	5/07/81	46 FR 25446	(c)(12)	
		.....	11/10/82	47 FR 50866	(c)(16)	Temporary Relaxation for Kenyon Piece Dye Works.
		10/05/82	3/29/83	48 FR 13027	(c)(17)	Conversion/Conservation Incentive.
No. 14 ...	Record keeping and reporting.	5/14/73	1/15/76	41 FR 2231	(c)(10)	
		2/22/77	5/07/81	46 FR 25446	(c)(12)	
		7/05/79	5/07/81	46 FR 25446	(c)(12)	
		1/11/93	1/10/95	60 FR 2526	(c)(42)	
No. 15 ...	Control of organic solvent emissions.	8/21/75	5/07/81	46 FR 25446	(c)(12)	
		3/14/83	7/06/83	48 FR 31026	(c)(19)	Includes 100 TPY RACT Reg/Generic Bubble Rule.
		6/6/85	12/11/86	51 FR 44605	(c)(27)	RACT for Stanley Bostitch under 15.5.
		11/24/87	3/10/89	54 FR 10147	(c)(32)	Consent Agreement imposing RACT on Tech Industries under 15.5 (Provisions 7 and 8 not approved).

TABLE 52.2081—EPA-APPROVED RULES AND REGULATIONS—Continued

State citation	Title/subject	Date adopted by State	Date approved by EPA	FR citation	52.2070	Comments/Unapproved sections
		6/5/90	8/31/90	55 FR 35625	(c)(36)	RACT determination for Tillotson-Pearson under 15.5.
		4/24/90	9/6/90	55 FR 36638	(c)(35)	RACT determination/Bubble for Providence Metallizing under 15.5.
		12/10/89	9/30/91	56 FR 49416	(c)(37)	Amended Regulation No. 15, except subsections 15.1.16 and 15.2.2.
No. 16 ...	Operation of air pollution control system.	2/22/77	5/07/81	46 FR 25446	(c)(12)	
No. 17 ...	Odors	2/22/77	5/07/81	46 FR 25446	(c)(12)	
No. 18 ...	Control of emissions from solvent metal cleaning.	7/5/79	5/07/81	46 FR 25446	(c)(12)	
		4/22/81	4/26/82	47 FR 17817	(c)(15)	
		12/10/89	9/30/91	56 FR 49416	(c)(37)	Amended Regulation No. 18, except subsections 18.1.8, 18.2.1, 18.3.2(d), 18.3.3(f), and 18.5.2.
No. 19 ...	Control of VOCs from surface coating operations.	11/13/79	5/07/81	46 FR 25446	(c)(12)	Conditional approval.
		4/05/82	7/06/83	48 FR 31026	(c)(19)	Removes Conditions/Generic Bubble Rule.
		9/12/85	8/31/87	52 FR 32794	(c)(28)	Compliance date extension for Keene Corporation under 19.3.
		1/20/87	9/1/87	52 FR 32920	(c)(30)	Amended Regulation No. 19, Subsection 19.7.1.
		5/29/85	9/28/87	52 FR 36250	(c)(26)	Compliance date extension for James River Corp. in Johnston.
		12/31/86	2/10/88	53 FR 3890	(c)(29)	Alternative RACT for Kenyon Industries under 19.3.3.
		12/10/89	9/30/91	56 FR 49416	(c)(37)	Amended Regulation No. 19, except subsections 19.1.11, 19.2.2, and 19.3.2(a).

TABLE 52.2081—EPA-APPROVED RULES AND REGULATIONS—Continued

State citation	Title/subject	Date adopted by State	Date approved by EPA	FR citation	52.2070	Comments/Unapproved sections
		10/30/92	10/18/94	59 FR 52429	(c)(40)	All of No. 19 is approved with the exception of 19.2.2, and the last sentence of 19.1.1, which Rhode Island did not submit as part of the SIP revision. No. 19 was amended to change applicability and to add emission limitations for metal coil coating, metal furniture coating, magnet wire coating, large appliance coating, miscellaneous metal parts coating, wood products coating, and flat wood paneling coating.
No. 21 ...	Control of VOCs from printing operations.	4/05/82	7/06/83	48 FR 31026	(c)(19)	Generic Bubble Rule.
		1/20/87	9/1/87	52 FR 32920	(c)(30)	Amended Regulation No. 21, subsection 21.6.1.
		12/10/89	9/30/91	56 FR 49416	(c)(37)	Amended Regulation No. 21, except subsections 21.1.15 and 21.2.2, and portion of 21.5.2(h) which states ''equivalent to'' in the parenthetical.
No. 25 ...	Control of Volatile Organic Compound Emissions from Cutback and Emulsified Asphalt.	10/30/92	10/18/94	59 FR 52429	(c)(40)	All of No. 25 is approved, with the exception of 25.2.2, which was not submitted by Rhode Island as part of the SIP revision.
No. 26 ...	Control of Organic Solvent Emissions from Manufacture of Synthesized Pharmaceutical Products.	10/30/92	10/18/94	59 FR 52429	(c)(40)	All of No. 26 is approved, with the exception of 26.2.3, which was not submitted by Rhode Island as part of the SIP revision.
No. 29.3	EMISSIONS	4/28/95	3/22/96	61 FR 11735	(c)(45)	This rule limits a source's potential to emit, therefore avoiding RACT, title V operating permits.

TABLE 52.2081—EPA-APPROVED RULES AND REGULATIONS—Continued

State citation	Title/subject	Date adopted by State	Date approved by EPA	FR citation	52.2070	Comments/Unapproved sections
No. 30 ...	Control of VOC from Automobile Refinishing Operations.	6/27/95	2/2/96	61 FR 3827	(c)(44)	Control of VOC From Automobile Refinishing Operations.
No. 32 ...	Marine Vessels	3/11/94	4/4/96	60 FR 14978	(c)(43)	All of No. 32 is approved with the exception of Section 32.2.2 which Rhode Island did not submit as part of the SIP revision.

[50 FR 770, Jan. 7, 1985, as amended at 51 FR 756, Jan. 8, 1986; 51 FR 27538, Aug. 1, 1986; 51 FR 44605, Dec. 11, 1986; 52 FR 32794, Aug. 31, 1987; 52 FR 32920, Sept. 1, 1987; 52 FR 36250, Sept. 28, 1987; 53 FR 3890, Feb. 10, 1988; 54 FR 10147, Mar. 10, 1989; 54 FR 23661, June 2, 1989; 54 FR 38518, Sept. 19, 1989; 55 FR 35625, Aug. 31, 1990; 55 FR 36638, Sept. 6, 1990; 56 FR 49416, Sept. 30, 1991; 56 FR 50515, Oct. 7, 1991; 58 FR 65933, Dec. 17, 1993; 59 FR 52429, Oct. 18, 1994; 60 FR 2526, Jan. 10, 1995; 61 FR 3827, Feb. 2, 1996; 61 FR 4357, Feb. 6, 1996; 61 FR 11735, Mar. 22, 1996; 61 FR 14978, Apr. 4, 1996]

§ 52.2082 [Reserved]

§ 52.2083 Significant deterioration of air quality.

(a) The Rhode Island plan, as submitted, is approved as meeting the requirements of Subpart 1, Part C, Title I, of the Clean Air Act.

[49 FR 27750, July 6, 1984]

§ 52.2084 Rules and regulations.

(a) Part D—Disapproval.

(1) On November 5, 1985, the Rhode Island Department of Environmental Management submitted a revision to the Rhode Island State Implementation Plan (SIP) for Arkwright Incorporated. This revision is an alternative reasonably available control technology determination for the control of volatile organic compounds (VOC) from three paper coating lines at Arkwright Incorporated's Fiskeville, Rhode Island facility. As a result of EPA's disapproval of this revision, the existing VOC rules applicable to Arkwright Incorporated and contained in the Rhode Island SIP remain in effect (Rhode Island Air Pollution Control Regulation No. 19 as approved by EPA in 40 CFR 52.2080(c)(19)).

(b) *Non-Part D—No Action*—EPA is neither approving nor disapproving the following elements of the revisions:

(i) [Reserved]

(ii) Consultation.

(iii) Permit fees.

(iv) Stack height requirements.

(v) Public notification.

[46 FR 25460, May 7, 1981, as amended at 48 FR 31027, July 6, 1983; 50 FR 52461, Dec. 24, 1985; 52 FR 38764, Oct. 19, 1987]

§ 52.2085 Stack height review.

The State of Rhode Island has declared to the satisfaction of EPA that no existing emission limitations have been affected by stack height credits greater than good engineering practice or any other prohibited dispersion technique as defined in EPA's stack height regulations, as revised on July 8, 1985. Such declarations were submitted to EPA on March 27, 1986. The State has further declared, in letters from Thomas D. Getz, dated October 15, 1985 and March 27, 1986, that ''[R]hode Island will use the 8 July 1985 revised height regulations in administering section 9.18 of its new source review regulations.'' Thus, Rhode Island has satisfactorily demonstrated that its regulations meet 40 CFR 51.118 and 51.164.

[52 FR 49407, Dec. 31, 1987]

Subpart PP—South Carolina

§ 52.2120 Identification of plan.

(a) Title of plan: ''South Carolina Air Quality Implementation Plan.''

(b) The plan was officially submitted on January 21, 1972.

(c) The plan revisions listed below were submitted on the dates specified:

(1) Miscellaneous non-regulatory additions to the plan submitted on May 4, 1972, by the South Carolina Pollution Control Authority.

(2) Letter requesting delegation of authority submitted on July 21, 1972, by the Governor.

(3) Miscellaneous wording changes in paragraph 2.B.4 of Regulation 1A; in Sections I.B., II.B, and II.C of Standard 1A; in Section II.D of Standards 2A and in paragraph II of Regulation 4A submitted on August 23, 1972, by the Governor.

(4) Compliance schedules submitted on February 16, 1973, by the South Carolina Pollution Control Authority.

(5) Categorical compliance schedule regulation submitted on August 16, 1973, by the South Carolina Department of Health and Environmental Control.

(6) Revised SO_2 emission limits for fuel combustion sources submitted on March 14, 1974, by the South Carolina Department of Health and Environmental Control.

(7) AQMA identification material submitted on March 22, 1974, by the South Carolina Department of Health and Environmental Control.

(8) Revised legal authority with respect to the public availability of emission data, submitted on October 15, 1975, by the Governor of South Carolina.

(9) Revised particulate emission limits for existing fuel burning sources and requirements for continuous in-stack monitoring and reporting of opacity by certain of these sources, submitted January 13 and March 30, 1977, by the South Carolina Department of Health and Environmental Control. (The revised particulate limits do not apply to International Paper Company's Georgetown facility or to the South Carolina Electric and Gas Company's Hagood Plant in Charleston; for these two sources, the plan's original emission limits continue to apply.)

(10) Permit changes, specified below, were submitted by the South Carolina Department of Health and Environmental Control on May 9, 1979. These changes provide emissions offset for R. R. Donnelley and Sons Company, and apply to M. Lowenstein and Sons, Inc., as follows:

(i) Operating permit number O/P–42–167 for the operation of five (5) Kingsley Roller Print Dryers (Nos. 3, 4, 5, 6, and 7) is cancelled with these dryers not to be operated after June 1, 1979.

(ii) Operating permit number O/P–42–170 through O/P–42–179 for screen print machine Nos. 3, 4, 5, 6, 7, 8, 10, 11, and 12 are reissued to reflect the total and permanent transition from solvent-based print pastes to water-based print pastes on these machines as of June 1, 1979.

(11) 1979 implementation plan revision for nonattainment areas, submitted on December 20, 1978, by the South Carolina Department of Health and Environmental Control.

(12) Variance granted to Bowater Carolina Corporation until April 1, 1981, for increased particulate emissions and opacity limits, and revised regulation 61.62.1(B)(II), submitted on April 24, 1980, by the South Carolina Department of Health and Environmental Control.

(13) Changes in and supplements to 1979 implementation plan revisions for nonattainment areas, submitted on April 4, June 13, July 6, August 14, August 22, 1979, and on April 29, 1981, by the South Carolina Department of Health and Environmental Control. Included are a special operating permit for Macalloy Corporation and the following regulation changes:

R. 62.5, Standard No. 5, Section II, revised definition of VOC (formerly located in R. 62.5, Standard No. 5, Section I, Part A);

R. 62.5, Standard No. 5, Section II, revised VOC regulation-Petroleum liquid storage tanks (formerly R. 62.5, Standard 5, Section II, Part B);

R. 62.1, Section I, revised definition of ''fugitive dust'';

R. 62.5, Standard No. 5, Section I, Part E—VOC—Case-by-Case Exceptions;

R. 62.5, Standard No. 1, Section I, Part C—VE—Special Provisions.

(14) Revisions in emergency episode plan, submitted on September 10, 1980, by the South Carolina Department of Health and Environmental Control.

(15) Air quality surveillance plan revision to satisfy the requirements of 40

CFR part 58, submitted on March 10, 1980 by the South Carolina Department of Health and Environmental Control.

(16) Provision for public participation to satisfy section 127(a) of the Clean Air Act, submitted on March 10, 1980 by the South Carolina Department of Health and Environmental Control.

(17) Standard No. 6, Alternative Emission Reduction Options, submitted on June 17, 1981, by the South Carolina Department of Health and Environmental Control.

(18) Set II VOC regulations, submitted on September 10, 1980, by the South Carolina Department of Health and Environmental Control.

(19) Alternative compliance schedule for Cryovac Division of W. R. Grace, Simpsonville, submitted on January 5, 1981, by the South Carolina Department of Health and Environmental Control.

(20) Implementation plan for lead, submitted on May 1, 1980, by the South Carolina Department of Health and Environmental Control.

(21) Prevention of significant deterioration SIP, submitted on April 14, 1981, by the South Carolina Department of Health and Environmental Control.

(22) Provision for variance from conditions of operating permits, submitted on June 7, 1982, by the South Carolina Department of Health and Environmental Control.

(23) Revised visible emissions standard for incinerators and revised regulation for alternate emission limitation options (bubbles), submitted on June 7, 1982, by the South Carolina Department of Health and Environmental Control. EPA is not taking action on that portion of this regulation (Regulation No. 62.5, Standard No. 6, Section II, Part D) pertaining to alternative emission limitation options for designated pollutants subject to regulation under section 111(d) of the Clean air Act.

(24) Special Operating Permit for South Carolina Electric and Gas Company-Williams Power Station, submitted on June 25, 1982, by the South Carolina Department of Health and Environmental Control.

(25) Visibility new source review regulations and narrative visibility SIP were submitted to EPA on June 3, 1985.

(i) Incorporation by reference.

(A) Letter of June 3, 1985, from the South Carolina Department of Health and Environmental Control, and amendments to Regulation No. 62.5, Standard No. 7, Section IV, Part H; Regulation No. 62.5, Standard No. 7, Section IV, Part E; and Regulation No. 62.5, Standard No. 7, Section I, Part CC, adopted by the South Carolina Board of Health and Environmental Control on May 21, 1985.

(ii) Additional material.

(A) Narrative section, titled ''Visibility Protection Control Strategy'', adopted by the South Carolina Board of Health and Environmental Control on May 21, 1985.

(26) Changes in Regulations 62.2, 62.3, and 62.5, submitted on March 3, May 5, and July 11, 1983 by the South Carolina Department of Health and Environmental Control.

(27) On March 3, and August 17, 1983 and September 5, 1984, Appendix B, a Methodology Manual for use with Standards for Volatile Organic Compounds, and on May 12, 1983, and January 23, 1980, studies for Appendix J, Transportation Control Plans for Columbia and Charleston, were submitted to EPA by the South Carolina Department of Health and Environmental Control.

(28) Stack height regulations were submitted to EPA on June 11, 1986.

(i) Incorporation by reference.

(A) Letter of June 11, 1986, from the South Carolina Department of Health and Environmental Control transmitting stack height regulations.

(B) Regulation 62.7, Good Engineering Practice Stack Height, adopted on April 24, 1986, and effective on May 23, 1986.

(C) Addition of item 10 to Section I, Definitions, of regulation 62.1, adopted on April 24, 1986, and effective on May 23, 1986.

(D) Addition of item A.2.f to Section II, Permit Requirements, of regulation 62.1, adopted on April 24, 1986, and effective on May 23, 1986.

(ii) Other material—none.

(29) Process opacity monitoring requirements were submitted to EPA on March 24, 1986 and July 8, 1986.

(i) Incorporation by reference.

(A) Letter of March 24, 1986 to EPA from the South Carolina Department of Health and Environmental Control, and amendments to Air Pollution Control Regulation No. 62.5, Standard No. 4, which was effective on February 28, 1986.

(ii) Other material—none.

(30) [Reserved]

(31) Changes in South Carolina's SIP submitted to EPA on June 5, 1985, by the South Carolina Department of Health and Environmental Control.

(i) Incorporation by reference.

(A) Changes in South Carolina's Regulations which were adopted May 24, 1985:

(*1*) Regulations 62.1, Section I (Definitions) No. 1 and Section III (Emission Inventory)

(*2*) Regulation 62.2 (Prohibition of Open Burning)

(*3*) Regulation 62.3 (Air Pollution Episodes); except for Section I and Section II Introductory paragraph

(*4*) Regulation 62.5, Standard No. 1 (Emissions From Fuel Burning Operations), Section IV, Part B, Section V, and Section VII

(*5*) Regulation 62.5, Standard No. 4 (Emissions from Process Industries), Except for Section III, Section VIII(A), and Section XI Introductory paragraph

(*6*) Regulation 62.5, Standard No. 7 (Prevention of Significant Deterioration), Section I, Parts B(1), E, F and Q(2)

(*7*) Regulation 62.6 (Control of Fugitive Particulate Matter), Section I (b) and (c) and Section III (c) and (d)

(ii) Other material.

(32) Provisions for PM_{10} submitted on April 29, 1988 and April 4, 1989, by the South Carolina Department of Health and Environmental Control. The April 29, 1988, submittal contained revisions that were effective on April 22, 1988. The April 4, 1989, submittal contained revisions that were effective on March 24, 1989.

(i) Incorporation by reference.

(A) Regulation 62.1, Definitions, Permit Requirements, and Emissions Inventory as revised by the addition on April 22, 1988, of Section I, Nos. 22, 23, 25, and 42.

(B) The following portions of Regulation 62.3, Air Pollution Episodes were revised April 22, 1988.

(*1*) Section I.

(*2*) Section II, Introductory paragraph.

(C) The following portions of Regulation 62.5, Standard No. 1—Emissions from Fuel Burning Operations were revised April 22, 1988:

(*1*) Section II, Title.

(*2*) Section VI, Introductory paragraph

(D) Regulation 62.5, Standard No. 2—Ambient Air Quality Standards revised April 22, 1988.

(E) The following portions of Regulation 62.5, Standard No. 4—Emissions from Process Industries were revised April 22, 1988.

(*1*) Section III

(*2*) Section VIII (A)

(*3*) Section XI, Introductory paragraph

(F) The following portions of Regulation 62.5, Standard No. 7—Prevention of Significant Deterioration were revised April 22, 1988.

(*1*) Section I, Part V(1)

(*2*) Section II, Part A

(*3*) Section III Part H(1)

(*4*) Section IV Part E(4)

(G) The following portions of Regulation 62.5, Standard No. 7—Prevention of Significant Deterioration were revised March 24, 1989.

(*1*) Section III, Part D, (6) and (7)

(*2*) Section III Part (J)(3), (4), and (5)

(*3*) Section IV Part (H)(4)

(ii) Other materials.

(A) Letters of April 29, 1988, and April 4, 1989, from the South Carolina Department of Health and Environmental Control which address PM_{10} revisions.

(B) Revised narrative on particulate matter.

(33) Changes in South Carolina's SIP submitted to EPA on March 16, 1989, by the South Carolina Department of Health and Environmental Control.

(i) Incorporation by reference.

(A) Regulation 62.5 Standard No. 4. Sections I thru VIII and Tables A and B effective April 22, 1988.

(B) Changes in South Carolina's Regulations which were effective March 24, 1989:

1. Regulation 62.1: Section I Definitions. 9 and 38 and Section III Emission Inventory.

2. Regulation 62.5, Standard No. 1 Emissions from Fuel Burning Operations: Section I, Part D; Section IV, Paragraph A.2.a. and Part D.

3. Regulation 62.5, Standard No. 2 Ambient Air Quality Standards: Introductory paragraph.

4. Regulation 62.5, Standard No. 4 Emissions from Process Industries: Section IX and X.

5. Regulation 62.5, Standard No. 7 Prevention of Significant Deterioration: Section 1 B(1)(a) and Part L

(ii) Additional Material.

(A) March 16, 1989, letter from South Carolina Department of Health and Environmental Control.

(34) Changes in South Carolina's SIP submitted to EPA on September 18, 1990, by the South Carolina Department of Health and Environmental Control.

(i) Incorporation by reference.

(A) The following revision to South Carolina's State Implementation Plan (SIP) which became effective on August 24, 1990:

(*1*) Regulation 61–62.1:
(*i*) Section II,A,1. Applicability
(*ii*) Standard No. 5.1:
Section I,A.
Section III,A,1.
Section III,D.
Section III,L.
Section IV,B.

(*2*) Regulation 61–62.5:
(*i*) Standard No. 7:
Section I,C,(4)
Section I,Part M
Section I,Part N
Section I,Part O
Section I, BB
Section II A.
Section II D,(1),(e)
Section II D,(3),(a)
Section IV,D,(1)
Section IV H,(4)

(*3*) Regulation 61–62.1
(*i*) Section I,74.

(*4*) Regulation 61–62.5, Standard No. 5
(*i*) Section I,A: 9,22,27–78
(*ii*) Section I,C,1,b,(vi)
(*iii*) Section I,E,4
(*iv*) Section I,E,12
(*v*) Part F. Recordkeeping, Reporting, Monitoring
(*vi*) Part G. Equivalency Calculations
(*vii*) Section II—Provisions for Specific Sources
Part A. Surface Coating of Cans
Part B,2. Control Technology
Part C
Part D
Part E Surface Coating of Magnet Wire
Part F,2. and 3.
Part G,3. Control Technology

(ii) Other material.

(A) None.

(35) [Reserved]

(36) The maintenance plan for Cherokee County submitted by the South Carolina Department of Health and Environmental Control on July 20, 1992, as part of the South Carolina SIP.

(i) Incorporation by reference.

(A) Cherokee County Ozone Attainment Demonstration and Ten Year Maintenance Plan effective June 11, 1992.

(B) Emissions Inventory Projections for Cherokee County effective June 11, 1992.

(ii) Other material.

(A) July 20, 1992 letter from the Department of Health and Environmental Control. Ten Year Maintenance Plan effective June 11, 1992.

(B) Emission Inventory Projections for Cherokee County effective June 11, 1992.

(iii) Other material.

(A) July 20, 1992 letter from the Department of Health and Environmental Control.

(37) The VOC Recordkeeping regulations for ozone nonattainment areas, PSD NO_x increment regulations, and regulations listing the definition of VOC submitted by South Carolina Department of Health and Environmental Control on July 23, 1992, as part of the South Carolina SIP.

(i) Incorporation by reference.

(A) South Carolina Regulation 61–62.5, Standard No. 5, section I, part F, covering VOC Recordkeeping, Reporting, and Monitoring; Regulation 61–62.5, Standard No. 7, section I, part C, paragraph 4; section I, part M; section I, part N; section I, part O; section I, part BB; section II, part A; section II, part D, paragraph 1, subparagraph e; section II, part D, paragraph 3, subparagraph a; section IV, part D, paragraph 1; section IV, part H, paragraph 4; covering PSD. These regulations

were effective August 24, 1990, and submitted September 18, 1990.

(B) South Carolina Regulation 61–62.1, section I, paragraph 74, covering the definition of VOC; Regulation 61–62.5, Standard No. 5, section I, part F, paragraph 3, covering VOC Recordkeeping in ozone nonattainment areas; and Regulation 61–62.5, Standard No. 7, section I, part O and section IV, part H, paragraph 4 covering PSD. These regulations were effective June 26, 1992, and submitted July 23, 1992.

(ii) Other material.

(A) July 23, 1992, letter from the South Carolina Department of Health and Environmental Control to Region IV EPA.

(B) [Reserved]

(38) The South Carolina Department of Health and Environmental Control has submitted revisions to the South Carolina Air Quality Implementation Plan on November 12, 1993. These revisions address the requirements of section 507 of title V of the Clean Air Act and establish the Small Business Stationary Source Technical and Environmental Program.

(i) Incorporation by reference.

(A) The submittal of the state of South Carolina's Small Business Assistance Program which was adopted on September 9, 1993.

(ii) Additional material. None.

(39) The PSD regulation revisions to the South Carolina State Implementation Plan which were submitted on March 3, 1995.

(i) Incorporation by reference.

(A) Regulations 61–62.5, Standard No. 7 Prevention of Significant Deterioration; I.C(4), I.N(1)(c), I.O(2)(b), I.O(3), II.A, II.D, III.D(10)(b), III.H(1), III.I(1) through III.I(2)ii, IV.D (1) & (2), and IV.H(4) effective on November 25, 1994.

(ii) Other material. none

(40) The minor source operating permit program for South Carolina, submitted by the Department of Health and Environmental Control on July 12, 1995, and as part of the South Carolina SIP.

(i) Incorporation by reference.

(A) Regulation 61–62.1, Section I.3, 13, 19, 50, 72, and 73, Section II.F.2, Section II.F.2.e, Section II.G, and Section II.H of the South Carolina SIP which became effective on June 23, 1995.

(ii) Other material. None.

[37 FR 10892, May 31, 1972]

EDITORIAL NOTE: For FEDERAL REGISTER citations affecting § 52.2120, see the List of CFR Sections Affected in the Finding Aids section of this volume.

§ 52.2121 Classification of regions.

The South Carolina plan was evaluated on the basis of the following classifications:

Air quality control region	Pollutant				
	Particulate matter	Sulfur oxides	Nitrogen dioxide	Carbon monoxide	Photochemical oxidants (hydrocarbons)
Augusta (Georgia)-Aiken (South Carolina) Interstate	I	I	III	III	III
Metropolitan Charlotte Interstate	I	II	III	III	I
Camden-Sumter Intrastate	II	III	III	III	III
Charleston Intrastate	I	I	III	III	III
Columbia Intrastate	II	III	III	III	III
Florence Intrastate	III	III	III	III	III
Georgetown Intrastate	II	III	III	III	III
Greenville-Spartanburg Intrastate	I	III	III	III	III
Greenwood Intrastate	III	III	III	III	III
Savannah (Georgia)-Beaufort (South Carolina) Interstate	I	I	III	III	III

§ 52.2122 Approval status.

(a) With the exceptions set forth in this subpart, the Administrator approves South Carolina's plans for the attainment and maintenance of the national standards under section 110 of the Clean Air Act. Furthermore the Administrator finds the plans satisfy all requirements of Part D, Title I, of the Clean Air Act as amended in 1977, except as noted elsewhere in this subpart. In addition, continued satisfaction of the requirements of Part D for

the ozone portion of the SIP depends on the adoption and submittal of RACT requirements by July 1, 1980 for the sources covered by CTG's issued between January 1978 and January 1979 and adoption and submittal by each subsequent January of additional RACT requirements for sources covered by CTGs issued by the previous January.

(b) EPA disapproved South Carolina's generic bubble regulation submitted for approval into the State Implementation Plan (SIP) on June 5, 1985.

[45 FR 6575, Jan. 29, 1980, as amended at 60 FR 12702, Mar. 8, 1995]

§52.2124 Legal authority.

(a)–(c) [Reserved]

(d) The requirements of §51.230(d) of this chapter are not met since statutory authority to prevent construction, modification, or operation of a facility, building, structure, or installation, or combination thereof, which indirectly results or may result in emissions of any air pollutant at any location which will prevent the maintenance of a national air quality standard is not adequate.

[37 FR 10892, May 31, 1972, as amended at 39 FR 7284, Feb. 25, 1974; 41 FR 10065, Mar. 9, 1976; 51 FR 40676, Nov. 7, 1986]

§52.2125 [Reserved]

§52.2126 VOC rule deficiency correction.

Sections I and II of South Carolina's Regulations 62.1 and 62.5 is approved. The State submitted these regulations to EPA for approval on September 18, 1990. Sections I and II of Regulation 62.5 were intended to correct deficiencies cited in a letter calling for the State to revise its SIP for ozone from Mr. Greer C. Tidwell, the EPA Regional Administrator, to Governor Carroll A. Campbell on May 26, 1988, and clarified in a letter from Mr. Winston A. Smith, EPA Region IV, Air, Pesticides and Toxics Management Division, to Mr. Otto E. Pearson, former Director of the South Carolina Department of Health and Environmental Control:

(a) South Carolina's VOC regulations contain no method for determining capture efficiency. This deficiency must be corrected after EPA publishes guidance on the methods for determining capture efficiency before the SIP for ozone can be fully approved.

(b) [Reserved]

[57 FR 4161, Feb. 4, 1992, as amended at 59 FR 17937, Apr. 15, 1994]

§§52.2127—52.2129 [Reserved]

§52.2130 Control strategy: Sulfur oxides and particulate matter.

In letters dated May 7, and December 2, 1986, the South Carolina Department of Health and Environmental Control certified that no emission limits in the State's plan are based on dispersion techniques not permitted by EPA's stack height rules. This certification does not apply to Public Service Authority—Winyah, SCE& G—Bowater, and SCE & G—Williams.

[54 FR 14651, Apr. 12, 1989]

§52.2131 Significant deterioration of air quality.

(a)–(b) [Reserved]

(c) All applications and other information required pursuant to §52.21 from sources located in the State of South Carolina shall be submitted to the Office of Environmental Quality Control, Department of Health and Environmental Control, 2600 Bull Street, Columbia, South Carolina 29201, instead of the EPA Region IV office.

[42 FR 4124, Jan. 24, 1977, as amended at 47 FR 6018, Feb. 10, 1982]

§52.2132 Visibility protection.

(a) The requirements of section 169A of the Clean Air Act are not met, because the plan does not include approvable procedures for protection of visibility in mandatory Class I Federal areas.

(b) Regulation for visibility monitoring. The provisions of §52.26 are hereby incorporated and made a part of the applicable plan for the State of South Carolina.

(c) *Long-term strategy*. The provisions of §52.29 are hereby incorporated and made part of the applicable plan for the State of South Carolina.

[50 FR 28553, July 12, 1985, as amended at 52 FR 45137, Nov. 24, 1987]

Subpart QQ—South Dakota

§ 52.2170 Identification of plan.

(a) Title of plan: ''Air Pollution Control Regulations and Implementation Plan for the State of South Dakota.''

(b) The plan was officially submitted on January 27, 1972.

(c) The plan revisions listed below were submitted on the dates specified.

(1) Request for delegation of authority submitted January 27, 1972, by the Governor.

(2) Clarification of control regulations (section 1.8.4) submitted April 27, 1972, by the State Department of Health.

(3) Clarification of control regulations (section 1.8.4) submitted May 2, 1972, by the Governor.

(4) On December 4, 1975, the Governor of South Dakota submitted revisions and additions to the air pollution control regulations (Article 34:10 of the Administrative Rules of South Dakota). The submittal updated rules and regulations; review procedures for newand modified direct sources; variance and enforcement procedure revisions; episode procedure changes; and the addition of new source performance standards similar to those of EPA.

(5) Provisions to meet the requirements of Part D of the Clean Air Act, as amended in 1977 were submitted on January 3, 1979.

(6) A new control strategy for Brookings, South Dakota was submitted on April 16, 1979.

(7) On January 21, 1980, the Governor submitted a plan revision to meet the requirements of Air Quality Monitoring 40 CFR part 58, subpart C, § 58.20, and Public Notification required under section 127 of the Clean Air Act.

(8) Provisions to meet the requirements of Part D of the Clean Air Act, as amended in 1977, were submitted on October 16, 1980.

(9) On September 13, 1982, the Governor submitted a plan revision for a new control strategy for Brookings, South Dakota and an amendment to the opacity regulation for alfalfa pelletizers.

(10) On May 4, 1984, the Governor submitted a plan revision for lead and repealed the hydrocarbon standard.

(11) On January 28, 1988, the Governor submitted a plan revision (1) updating citations to Federal regulations in the South Dakota air pollution control regulations (Administrative Rules of South Dakota 74:26), (2) adopting new ambient air quality standards for particulates (PM_{10}), (3) revising the State administrative procedures for handling permit hearings and contested cases, and (4) correcting deficiencies in the stack height regulations.

(i) Incorporation by reference.

(A) Revisions to the Administrative Rules of South Dakota (ARSD) 74:26:01:12, ARSD 74:26:01:35, ARSD 74:26:01:37, ARSD 74:26:01:64, ARSD 74:26:08 through ARSD 74:26:23, inclusive, and addition of a new section, ARSD 74:26:02:35, were revised through November 24, 1987.

(12) In a letter dated August 7, 1986, the Governor submitted revisions to the South Dakota SIP adopting federal stack height regulations (Administrative Rules of South Dakota 74:26). In a letter dated August 20, 1986, the Administrator, Office of Air Quality and Solid Waste of South Dakota, submitted the stack height demonstration analysis with supplemental information submitted on December 3, 1986.

(i) Incorporation by reference. (A) Revisions to the Administrative Rules of South Dakota 74:26 effective on May 21, 1986. The changes consisted of incorporating definitions for good engineering practices and dispersion techniques into 74:26:01:12, standard for the issuance of construction permit.

(B) Stack height demonstration analysis submitted by the State with letters dated August 20, 1986 and December 3, 1986.

(13) On September 25, 1992 and February 24, 1992, the Governor of South Dakota submitted revisions to the plan for new source performance standards and asbestos.

(i) *Incorporation by reference.*

(A) Revisions to the Air Pollution Control Program, Sections 74:26:08–74:26:21 and 74:26:23–74:26:25, New Source Performance Standards, effective May 13, 1991, Section 74:26:26, Standards of Performance for Municipal Waste Combustors, effective November 24, 1991,

and Section 74:26:22, Emission Standards for Asbestos Air Pollutants, effective December 2, 1991.

(14) On September 25, 1991, the designee of the Governor of South Dakota submitted revisions to the plan for new source review, operating permits, and the PM–10 Group II requirements.

(i) Incorporation by reference

(A) Revisions to the Air Pollution Control Program, Sections 74:26:01–74:26:08, effective May 13, 1991.

(ii) Additional material

(A) Letter dated April 14, 1992, from the South Dakota Department of Environment and Natural Resources to EPA.

(15) On November 10, 1992, the Governor of South Dakota's designee submitted a plan for the establishment and implementation of a Small Business Assistance Program to be incorporated into the South Dakota State Implementation Plan as required by section 507 of the Clean Air Act. An amendment to the plan was submitted by the Governor's designee on April 1, 1994.

(i) Incorporation by reference.

(A) November 10, 1992 letter from the Governor of South Dakota's designee submitting a Small Business Assistance Program plan to EPA.

(B) April 1, 1994 letter from the Governor of South Dakota's designee submitting an amendment to the South Dakota Small Business Assistance Program plan to EPA.

(C) The State of South Dakota amended plan for the establishment and implementation of a Small Business Assistance Program, adopted January 12, 1994 by the South Dakota Department of Environment and Natural Resources.

(D) South Dakota Codified Laws 34A–1–57, effective July 1, 1992 and 34A–1–58 through 60, effective July 1, 1993, which gives the State of South Dakota the authority to establish and fund the South Dakota Small Business Assistance Program.

(16) On November 12, 1993 and March 7, 1995, the designee of the Governor of South Dakota submitted revisions to the plan, which included revised regulations for definitions, minor source construction and federally enforceable state operating permit (FESOP) rules, source category emission limitations, sulfur dioxide rule corrections, new source performance standards (NSPS), new source review (NSR) requirements for new and modified major sources impacting nonattainment areas, and enhanced monitoring and compliance certification requirements. The State also requested that the existing State regulations approved in the South Dakota SIP be replaced with the following chapters of the recently recodified Administrative Rules of South Dakota (ARSD): 74:36:01–74:36:04, 74:36:06; 74:36:07, 74:36:10–74:36:13, and 74:36:15, as in effect on January 5, 1995.

(i) Incorporation by reference.

(A) Revisions to the Administrative Rules of South Dakota, Air Pollution Control Program, Chapters 74:36:01 (except 74:36:01:01(2) and (3)); 74:36:02–74:36:04, 74:36:06; 74:36:07, 74:36:10–74:36:13, and 74:36:15, effective April 22, 1993 and January 5, 1995.

[37 FR 15089, July 27, 1972, as amended at 41 FR 8966, Mar. 2, 1976; 41 FR 32744, Aug. 5, 1976; 44 FR 44495, July 30, 1979; 44 FR 46846, Aug. 9, 1979; 45 FR 58529, Sept. 4, 1980; 46 FR 54542, Nov. 3, 1981; 48 FR 31200, July 7, 1983; 49 FR 37753, Sept. 26, 1984; 53 FR 34079, Sept. 2, 1988; 54 FR 24341, June 7, 1989; 58 FR 5297, Jan. 21, 1993; 58 FR 37425, July 12, 1993; 59 FR 53592, Oct. 25, 1994; 60 FR 46227, Sept. 6, 1995]

§ 52.2171 Classification of regions.

The South Dakota plan evaluated on the basis of the following classifications:

Air quality control region	Pollutant				
	Particulate matter	Sulfur oxides	Nitrogen dioxide	Carbon monoxide	Photochemical oxidants (hydrocarbons)
Metropolitan Sioux City Interstate	III	III	III	III	III
Metropolitan Sioux Falls Interstate	II	III	III	III	III
Black Hills—Rapid City Intrastate	III	III	III	III	III

Air quality control region	Pollutant				
	Particulate matter	Sulfur oxides	Nitrogen dioxide	Carbon monoxide	Photochemical oxidants (hydrocarbons)
South Dakota Intrastate	III	III	III	III	III

[37 FR 10893, May 31, 1972]

§ 52.2172 Approval status.

With the exceptions set forth in this subpart, the Administrator approves South Dakota's plan as meeting the requirements of section 110 of the Clean Air Act, as amended in 1977. Furthermore, the Administrator finds that the plan satisfies all requirements of Part D of the Clean Air Act, as amended in 1977.

[46 FR 54542, Nov. 3, 1981]

§ 52.2173 Legal authority.

(a) The requirements of § 51.230(f) of this chapter are not met since the South Dakota Compiled Law 34–16A–21 provides that data which relates to processes or production unique to the owner or which tend to adversely affect a competitive position of the owner shall be held confidential.

(b) Delegation of authority: Pursuant to section 114 of the Act, South Dakota requested a delegation of authority to enable it to collect, correlate and release emission data to the public. The Administrator has determined that South Dakota is qualified to receive a delegation of the authority it requested. Accordingly, the Administrator delegates to South Dakota his authority under sections 114(a) (1) and (2) and section 114(c) of the Act, i.e., authority to collect, correlate, and release emission data to the public.

[37 FR 15089, July 27, 1972, as amended at 51 FR 40676, Nov. 7, 1986]

§§ 52.2174—52.2177 [Reserved]

§ 52.2178 Significant deterioration of air quality.

(a) The requirements of sections 160 through 165 of the Clean Air Act are not met, since the plan does not include approvable procedures for preventing the significant deterioration of air quality.

(b) Regulations for preventing significant deterioration of air quality. The provisions of § 52.21 (b) through (w) are hereby incorporated and made a part of the applicable state plan for the State of South Dakota.

(c) All applications and other information required pursuant to § 52.21 from sources located in the State of South Dakota, except from those sources proposing to locate on Indian reservations, shall be submitted to the Director of the Division of Environmental Regulation, Department of Environment and Natural Resources, Joe Foss Building, Pierre, South Dakota 57501 instead of the EPA Region VIII office.

[43 FR 26410, June 19, 1978, as amended at 45 FR 52741, Aug. 7, 1980; 59 FR 47261, Sept. 15, 1994]

§ 52.2179 Visibility protection.

(a) The requirements of section 169A of the Clean Air Act are not met, because the plan does not include approvable procedures for protection of visibility in mandatory Class I Federal areas.

(b) Regulation for visibility monitoring and new source review. The provisions of §§ 52.26 and 52.28 are hereby incorporated and made a part of the applicable plan for the State of South Dakota.

(c) *Long-term strategy*. The provisions of § 52.29 are hereby incorporated and made part of the applicable plan for the State of South Dakota.

[50 FR 28553, July 12, 1985, as amended at 52 FR 45137, Nov. 24, 1987]

§52.2180 Stack height regulations.

The State of South Dakota has committed to revise its stack height regulations should EPA complete rulemaking to respond to the decision in *NRDC* v. *Thomas*, 838 F.2d 1224 (DC Cir. 1988). In a letter to Douglas M. Skie, EPA, dated May 11, 1988, Joel C. Smith, Administrator, Office of Air Quality and Solid Waste, stated:

''* * * We are submitting this letter to allow EPA to continue to process our current SIP submittal with the understanding that if EPA's response to the NRDC remand modifies the July 8, 1985 regulations, EPA will notify the State of the rules that must be changed to comport with the EPA's modified requirements. The State of South Dakota agrees to make the appropriate changes.''

[53 FR 34079, Sept. 2, 1988]

§52.2182 PM_{10} Committal SIP.

On July 12 1988, the State submitted a Committal SIP for the Rapid City Group II PM_{10} area, as required by the PM_{10} implementation policy. The SIP commits the State to continue to monitor for PM_{10} and to submit a full SIP if a violation of the PM_{10} National Ambient Air Quality Standards is detected. It also commits the State to make several revisions related to PM_{10} to the existing SIP.

[55 FR 40834, Oct. 5, 1990]

§52.2183 Variance provision.

The revisions to the variance provisions in Chapter 74:26:01:31.01 of the South Dakota Air Pollution Control Program, which were submitted by the Governor's designee on September 25, 1991, are disapproved because they are inconsistent with section 110(i) of the Clean Air Act, which prohibits any state or EPA from granting a variance from any requirement of an applicable implementation plan with respect to a stationary source.

[58 FR 37426, July 12, 1993]

§52.2184 Operating permits for minor sources.

Emission limitations and related provisions established in South Dakota minor source operating permits, which are issued in accordance with ARSD 74:36:04 and which are submitted to EPA in a timely manner in both proposed and final form, shall be enforceable by EPA. EPA reserves the right to deem permit conditions not federally enforceable. Such a determination will be made according to appropriate procedures and will be based upon the permit, permit approval procedures, or permit requirements which do not conform with the operating permit program requirements of EPA's underlying regulations.

[60 FR 46228, Sept. 6, 1995]

Subpart RR—Tennessee

§52.2219 Identification of plan—conditional approval.

(a) EPA is conditionally approving the following revisions to the Tennessee SIP contingent on the State of Tennessee meeting the schedule to correct deficiencies associated with the following rules which was committed to in letters dated October 7, 1994, and December 16, 1994, from the State of Tennessee to EPA Region IV.

(1) Rule 1200–3–18–.01 Definitions: Subparagraph (1), the definition of ''volatile organic compound,'' effective April 22, 1993.

(2) Rule 1200–3–18–.02 General Provisions and Applicability: Paragraph (8) effective April 22, 1993.

(3) Rule 1200–3–18–.06 Handling, Storage and Disposal of Volatile Organic Compounds (VOC's): Paragraph (1) effective April 22, 1993.

(4) Rule 1200–3–18–.39 Manufacture of High-Density Polyethylene, Polypropylene, and Polystyrene Resins: Subparagraph (5)(a)(2) effective April 22, 1993.

(5) Rule 1200–3–18–.86 Performance Specifications for Continuous Emission Monitoring of Total Hydrocarbons: Subparagraph (11)(c) effective April 22, 1993.

(b) [Reserved]

(c) [Reserved]

[60 FR 10508, Feb. 27, 1995]

§52.2220 Identification of plan.

(a) Title of plan: ''Tennessee Air Pollution Control Implementation Plan.''

(b) The plan was officially submitted on January 27, 1972.

(c) The plan revisions listed below were submitted on the dates specified.

(1) Certification of public hearing submitted on February 3, 1972, by the Division of Air Pollution Control of the Tennessee Department of Public Health.

(2) Miscellaneous corrections to emission inventories submitted on February 10, 1972, by the Division of Air Pollution Control of the Tennessee Department of Public Health.

(3) Statements of intent for intergovernmental cooperation submitted on April 13, 1972, by the Division of Air Pollution Control of the Tennessee Department of Public Health.

(4) City of Memphis Air Pollution Control Code submitted on April 27, 1972, by the Division of Air Pollution Control of the Tennessee Department of Public Health and the Memphis and Shelby County Health Department.

(5) Minor addition to the Tennessee Code, Section 53–3422, submitted on May 3, 1972, by the Division of Air Pollution Control of the Tennessee Department of Public Health.

(6) Clarifying comments on the plan submitted on May 8, 1972, by the Division of Air Pollution Control of the Tennessee Department of Public Health.

(7) Statement of public availability of emission data submitted on May 12, 1972, by the Division of Air Pollution Control of the Tennessee Department of Public Health.

(8) Miscellaneous changes to Chapters II, III, VII, IX and XII of the plan; regulations of Memphis-Shelby County and Knoxville-Knox County and resolutions concerning local programs of Davidson, Hamilton and Shelby Counties submitted on August 17, 1972, by the Governor.

(9) Revised emission limits for asphalt plants, cotton gins and Kraft mills and establishment of new source performance standards submitted on February 16, 1973, by the Tennessee Department of Public Health.

(10) Compliance schedules submitted on March 23, 1973, by the Division of Air Pollution Control of the Tennessee Department of Public Health.

(11) Compliance schedules submitted on April 16, 1973, by the Division of Air Pollution Control of the Tennessee Department of Public Health.

(12) Certification of public hearing on February 16, 1973, submission submitted on April 30, 1973, by the Division of Air Pollution Control of the Tennessee Department of Public Health.

(13) Compliance schedules submitted on May 15, 1973, by the Division of Air Pollution Control of the Tennessee Department of Public Health.

(14) Clarifying comments on the February 16, 1973, submission submitted on May 25, 1973, by the Division of Air Pollution Control of the Tennessee Department of Public Health.

(15) Miscellaneous changes to Chapters II through IV and VI through XIII of the plan, miscellaneous non-regulatory additions, certification of public hearing and compliance schedules submitted on June 8, 1973, by the Division of Air Pollution Control of the Tennessee Department of Public Health.

(16) Categorical compliance schedule regulation for SO_2 submitted on June 27, 1973, by the Division of Air Pollution Control of the Tennessee Department of Public Health.

(17) Compliance schedules submitted on July 3, 1973, by the Division of Air Pollution Control of the Tennessee Department of Public Health.

(18) Hamilton County Air Pollution Control Regulations and miscellaneous non-regulatory additions to the plan submitted on July 18, 1973, by the Division of Air Pollution Control of the Tennessee Department of Public Health and the Chattanooga-Hamilton County Air Pollution Control Bureau.

(19) Compliance schedules submitted on July 20, 1973, by the Division of Air Pollution Control of the Tennessee Department of Public Health.

(20) Chapter IV of the Metropolitan Code for the Metropolitan Government of Nashville and Davidson County submitted on August 13, 1973, by the Division of Air Pollution Control of the Tennessee Department of Public Health and the Metropolitan Health Department of Nashville and Davidson County.

(21) Revisions to Chapters II, VI, VII, IX, and XIV of the plan concerning SO_2 emissions submitted on October 12, 1973, by the Division of Air Pollution

Control of the Tennessee Department of Public Health.

(22) Compliance schedules submitted on October 15, 1973, by the Division of Air Pollution Control of the Tennessee Department of Public Health.

(23) Compliance schedules submitted on October 16, 1973, by the Division of Air Pollution Control of the Tennessee Department of Public Health.

(24) Compliance schedules submitted on December 26, 1973, by the Division of Air Pollution Control of the Tennessee Department of Public Health.

(25) Addition to Subparagraph F, Section I, Chapter XIV submitted on January 17, 1974, by the Division of Air Pollution Control of the Tennessee Department of Public Health.

(26) Compliance schedules submitted on February 20, 1974, by the Division of Air Pollution Control of the Tennessee Department of Public Health.

(27) Revised emission limits for combustion and process sources of sulfur dioxide, submitted on April 30, 1976, by the Division of Air Pollution Control of the Tennessee Department of Public Health. (The provision for an alternative basis for regulating process sources in Shelby County is given conditional approval; any exercise of this provision must be made the subject of a plan revision.)

(28) Regulations providing for continuous monitoring by existing sources, submitted on May 22, 1977, by the Division of Air Pollution Control of the Tennessee Department of Public Health for the Metropolitan Health Department of Nashville and Davidson County.

(29) Regulations providing for continous monitoring of existing sources, control of vinyl chloride emissions, review of new sources in nonattainment areas, control of emissions from wood-fired boilers, change in diffusion equation limiting particulate emissions, conflict of interest rules and miscellaneous other changes, submitted on May 3 and June 22, 1978, by the Tennessee Department of Public Health, Division of Air Pollution Control.

(30) 1979 implementation plan revisions for nonattainment areas, submitted on February 13 and April 12 and 27, 1979, by the Tennessee Division of Air Pollution Control (Bristol, Lafollettee, Jacksboro, Sumner Co., Anderson/Knox Counties, Copperhill, Johnsonville area, Shelby Co., and Knox Co.)

(31) Requests for an 18-month extension of the statutory timetable for submitting plans to attain and maintain the secondary ambient standard for particulate matter in the Chattanooga, Columbia, Kingsport, Memphis, and Nashville nonattainment areas, submitted on May 4, 9, and 17, and June 21 and 22, 1979, by the Tennessee Department of Public Health.

(32) Regulation 1200–3–9–.01–(4) for the review of new sources adopted on March 21, 1979, with a State effective date of June 21, 1979, and submitted on April 12, 1979, pursuant to the requirements of § 51.24 of this chapter (1978 edition) by the Tennessee Division of Air Pollution Control.

(33) 1979 implementation plans for the Nashville TSP and CO nonattainment areas and Statewide ozone nonattainment areas, including regulations Number 3, and Number 7 for Nashville-Davidson County adopted on April 11, 1979 and March 14, 1979, which were submitted on May 15, 1979, and regulations 1200–3–18–01 through .47, adopted on March 14, April 11, June 20 and 28, 1979, and May 1, 1980, and submitted on June 28, July 2, 1979, and May 8, 1980, by the Tennessee Department of Public Health.

(34) 1979 implementation plan revisions for the Kingsport TSP nonattainment area, submitted on August 15, 1979, by the Tennessee Department of Public Health.

(35) Regulation 1200–3–14–.01, –.02, –.03 for control of sulfur dioxide emissions, adopted on July 1, 1979, with a State effective date of November 16, 1979, and submitted on June 29, 1979, by the Tennessee Department of Public Health.

(36) [Reserved]

(37) Transportation related commitments and schedules, submitted on March 20 and December 17, 1980, by the Tennessee Division of Air Pollution Control to correct deficiencies in the Memphis CO plan given conditional approval on February 6, 1980.

(38) Air quality surveillance plan submitted on April 23, 1980, by the Tennessee Department of Public Health.

(39) Set II VOC regulations, submitted on December 31, 1980, by the Tennessee Department of Public Health.

(40) Davidson County and Hamilton County implementation plans for lead, submitted on August 19, 1981, by the Tennessee Department of Public Health.

(41) Revisions involving the following regulations—

Rule 1200–3–11–.02(2)(1)5.(ii): Asbestos;
Rule 1200–3–12–.04(2)(c): Large Existing Fuel Burning Installations;
Rule 1200–3–18–.02(1)(ii): Definitions: Volatile Organic Compounds;
Rule 1200–3–18–.04: Alternative Emission Standard; and
Rule 1200–3–18–.42(3): Individual Compliance Schedules—submitted on September 30, 1981, by the Tennessee Department of Public Health.

(42) Alternative VOC compliance schedule for Werthan Industries, Inc., Nashville, submitted on October 9, 1981, by the Tennessee Department of Public Health.

(43) Revision to the Volatile Organic Compound (VOC) definition, submitted on August 27, 1980, by the Tennessee Department of Public Health.

(44) Miscellaneous nonregulatory revisions submitted on October 25, 1979, March 20, 1980, May 5, 1980, August 15, 1980, and November 5, 1981, and miscellaneous regulatory revisions submitted on February 6, 1979 (change in Chapter 6), on June 13, 1979 (changes in Chapters 2, 4, 6, 7, and 8), on September 27, 1979 (change in Chapter 16), on October 15, 1979 (changes in Chapters 1, 2, 7, 11, 16, and 19), on November 23, 1979 (changes in Chapters 6, 9, 12, 16, 18, and 20), on February 19, 1980 (changes in Chapters 2 and 12), October 25, 1980 (changes in Chapters 2, 3, 4, 5, 6, 7, 8, 9, 10, 12, and 14), on August 26, 1981 (changes in Chapters 5, 9, 14, 15, 16, 18, and 19), on September 30, 1981 (change in Chapter 16), on December 9, 1981 (changes in Chapters 2, 16, 18, 19, and 20), and on January 22, 1982 (changes in Chapters 2, 5, 7, 8, 12, 16, 18, 19, and 21).

(45)(i) Materials developed to meet conditions on the approval of the 1979 revisions for the Nashville and Kingsport primary TSP nonattainment areas, submitted on September 30, 1980, and December 17, 1980, respectively, by the Tennessee Department of Public Health. Additional materials for Kingsport were submitted on August 27, 1981.

(ii) 1979 revisions for the Copperhill secondary SO_2 nonattainment area, submitted on August 15, 1980, by the Tennessee Department of Public Health.

(iii) 1979 revisions for the Kingsport secondary TSP nonattainment area, submitted on May 8, 1980, by the Tennessee Department of Public Health.

(46) Miscellaneous changes in Chapters 1200–3–5, 10, 12, 18, and 20, submitted on December 9, 1981, and miscellaneous changes in Chapters 1200–3–2, 5, 7, 9, 12, 16, 18, submitted on January 22, 1982, by the Tennessee Department of Public Health.

(47) Metropolitan Nashville-Davidson County Set II VOC Regulation, submitted on August 27, 1980 and January 23, 1981, by the Tennessee Department of Public Health.

(48) Extended compliance schedules for five sources of VOC, and operating permit for Du Pont de Nemours Company's scrub solids kiln at New Johnsonville, submitted on February 12, 1982, by the Tennessee Department of Public Health.

(49) Part D revisions for the Chattanooga primary TSP nonattainment area, submitted on August 31, 1981, and December 22, 1982, by the Tennessee Department of Public Health. (No action is taken on the definition of ''reconstruction'' contained in the revisions.)

(50) Certain State permits for the Kingsport area, and a visible emission technique for nontraditional fugitive dust sources (Method 1) submitted on May 10, 1982; and a revision entitled Standard of Performance for Storage Vessels for Petroleum Liquids Contracted after May 18, 1978, (1200–3–16–/.09a) submitted May 5, 1982, by the Tennessee Department of Public Health.

(51) Changes in visible emission evaluation technique for nontraditional sources, submitted on September 29, 1982, by the Tennessee Department of Public Health.

(52) VOC compliance schedule extension for Knowlton Brothers, Chattanooga, submitted on August 3, 1982, by the Tennessee Department of Public Health.

(53) Knox County plan for lead, submitted on March 1, 1983, by the Tennessee Department of Public Health.

(54) Revisions to the Part D ozone plan for the Nashville-Davidson County nonattainment area, submitted on June 30, 1982, by the Tennessee Department of Public Health.

(55) Nashville-Davidson County regulations for prevention of significant deterioration and for new source review in nonattainment areas, submitted on October 9, 1981 (revised regulation no. 3), June 3 and November 22, 1982 (changes in revised regulation no. 3 and in Chapter Four of the Metropolitan Code of Nashville and Davidson County), and regulations submitted on June 3, 1982, for the control of volatile organic compounds, determination of good engineering practice stack height, and permits for an equivalent opacity standard for Ford Motor Company, by the Tennessee Department of Public Health.

(56) 1982 revisions in the Part D CO SIP for the Nashville-Davidson County nonattainment area (except TCM portion approved on September 13, 1985), submitted on June 30, 1982, and June 14, 1985.

(i) Incorporation by reference.

(A) Metropolitan Health Department Pollution Control Division Regulation No. 8 for Inspection and Maintenance (I/M) adopted on May 13, 1981; and revised on June 12, 1985, and February 15, 1984.

(B) Metropolitan Nashville and Davidson County's Carbon Monoxide Reasonable Further Progress (RFP) curve adopted on May 8, 1985.

(ii) Other material.

(A) Narrative adopted June 16, 1982.

(B) Public awareness program mechanics training program adopted May 8, 1985.

(57) Regulatory revisions (changes and additions in regulations 1200–3–5–.11, 1200–3–12–.04–(4), 1200–3–16–.01–(5), 1200–3–16–.14, 1200–3–16–.32, 1200–3–16–.33, 1200–3–18–.02(1)(hh), 1200–3–18–.02(ii), 1200–3–18–.03(1)(b), 1200–3–18–.21(5), and 1200–3–18–.22(2), 1200–3–19–.03 (g), (h) and addition of regulation 1200–3–18–.30) submitted on April 22, 1983, and nonregulatory revisions (changes in sections 2.15 and 2.12.E.2, 2.8.1, and eleven permits for sources in the Kingsport area) submitted on April 14, 1983, by the Tennessee Department of Health and Environment.

(58) Materials related to attainment status designations of various areas, submitted on January 19, 20, and 21, February 9, March 4, 14, and 22, April 6, and June 1, 1983, by the Tennessee Department for Health and Environment.

(59) Control strategy demonstration for lead, submitted on June 4, 1984, by the Tennessee Department of Health and Environment.

(60) Lead implementation plan for Memphis/Shelby County, submitted on June 25, 1984, by the Tennessee Department of Health and Environment.

(61) Material related to a compliance schedule for Maremont Corporation in Pulaski, and two permits for the Kingsport Press in Kingsport, submitted on September 15, 1983, and January 16, 1984, by the Tennessee Department of Health and Environment.

(62) Regulations for the prevention of significant deterioration, submitted on December 9, 1981, April 22 and September 1, 1983, and clarifications submitted on September 5, 1984, and January 17, 1985 by the Tennessee Department of Health and Environment. (Action has been deferred on the phrase ''except the activities of any vessel'' in 1200–3–9–.01(4)(b) until EPA revises the definition of stationary source.)

(63) Changes in rules 1200–3–5–.01 (to revise general visible emission standards), 1200–3–2–.01 (to add definition of ''calendar quarter''), 1200–3–12–.03 (to specify method for determining inorganic lead emissions in stack gases), 1200–3–14 (to revise monitoring requirements related to SO_2 control), and 1200–3–16–.01 (to specify method for determining particulate emissions from asphalt processing and roofing manufacture), submitted on October 17, 1984, and change in rule 1200–3–3 (to delete ambient air quality standard for hydrocarbons), submitted on December 5, 1984, by the Tennessee Department of Health and Environment.

(64) Changes in visible emission evaluation methods, submitted on September 26, 1984, by the Tennessee Department of Health and Environment.

(65) Changes in visible emission limitations for wood-fired fuel burning equipment (changes in regulations

1200–3–5–.06 and 1200–3–5–.07), submitted on October 17, 1984, and January 18, 1985, by the Tennessee Department of Health and Environment. Coverage of wood-fired fuel equipment was expanded to include units of 500,000 to 100,000,000 BTU per hour heat input in certain counties; the compliance determining technique was changed from the aggregate method to the six-minute average.

(66) State implementation plan for lead, submitted on December 5, 1984, by the Tennessee Department of Health and Environment.

(i) Incorporation by reference. (A) Amendments to the Tennessee Air Pollution Control Regulations, Chapter 1200–3–22, Lead Emission Standards, as submitted, and State-effective on December 5, 1984.

(B) Operating permits for:

(*1*) Ross Metals, Inc., issued on December 5, 1984.

(*2*) General Smelting and Refining Company, issued on December 5, 1984.

(*3*) Tennessee Chemical Company, issued on December 5, 1984.

(ii) Additional information. (A) Control Strategy and modelling, submitted on June 4, 1984.

(67) Letter of commitment, submitted on December 20, 1984, by the Memphis-Shelby County Health Department.

(i) Incorporation by reference. (A) Letter of commitment on new source review for lead sources, submitted on December 20, 1984, by the Memphis County Health Department.

(ii) Additional information. (A) None.

(68) Revisions in the TCM portion of the 1982 CO SIP for Nashville-Davidson County, submitted on July 18, 1984, and adopted on June 4, 1984.

(i) Incorporation by reference. (A) Air Pollution Control Board of the State of Tennessee Board Order 13 84, which is a statement of intent to adopt two-cent gas tax equivalent measures in place of return of 1980 level of service in Nashville-Davidson County CO SIP TCM; and July 18, 1984 letter from the Tennessee Department of Health and Environment which approves the Metropolitan Nashville and Davidson County Legally Enforceable Limits and Schedules effective June 4, 1984.

(ii) Additional material. (A) Revision of the calculations on reductions due to implementation of the Rideshare Program submitted on July 18, 1984.

(69) Tennessee Visible Emission Evaluation Method 3, was submitted on January 16 and June 14, 1985, by the Tennessee Department of Health and Environment.

(i) Incorporation by reference.

(*a*) January 16, 1985 letter from Tennessee Department of Health and Environment and Tennessee Visible Emission Evaluation Method 3, §§1, 2, and 5, became State-effective on December 12, 1984.

(*b*) June 14, 1985 letter from Tennessee Department of Health and Environment and Tennessee Visible Emission Evaluation Method 3, §§3 and 4, became State-effective on May 30, 1985.

(ii) Other material—none.

(70)–(71) [Reserved]

(72) Five Board Orders were submitted on January 29, 1986, by the Tennessee Department of Health and Environment.

(i) Incorporation by reference.

(A) Board Order 2–86 from Tennessee Department of Health and Environment, became State-effective on January 15, 1986.

(B) Board Order 3–86 from Tennessee Department of Health and Environment, became State-effective on January 15, 1986.

(C) Board Order 5–86 from Tennessee Department of Health and Environment, became State-effective on January 15, 1986.

(ii) Other material—none.

(73) Tennessee Visible Emissions Evaluation Method 4 was submitted on May 28, 1986, by the Tennessee Department of Health and Environment.

(i) Incorporation by reference.

(A) Tennessee Visible Emissions Evaluation Method 4, which became State-adopted on April 16, 1986.

(ii) Other material—none.

(74) Board Orders 7–86 and 11–86 were submitted on May 9, 1986, by the Tennessee Department of Health and Environment.

(i) Incorporation by reference.

(A) Board Order 7–86, which became State-effective on April 16, 1986.

(B) Board Order 11–86, and temporary operating permit for Refined Metals

Corp., permit No. 0212–OIP, which became State-effective on April 16, 1986.

(ii) Other material—none.

(75) Board Order 12–86, a one-year variance from SO_2 ambient monitoring by DuPont in Old Hickory, was submitted on July 7, 1986, by the Tennessee Department of Health and Environment.

(i) Incorporation by reference.

(A) Board Order 12–86, which became State-effective on June 19, 1986.

(ii) Other material—none.

(76) Board Orders 23–86, 24–86, 34–86 and 36–86 were submitted on October 7, 1986 and December 30, 1986, respectively by the Tennessee Department of Health and Environment.

(i) Incorporation by reference.

(A) Board Order 23–86, which became State-effective on September 17, 1986.

(B) Board Order 24–86, which became State-effective on September 17, 1986.

(C) Board Order 34–86, which became State-effective on November 20, 1986.

(D) Board Order 36–86, which became State-effective on November 20, 1986.

(ii) Other material—none.

(77) Board Orders 35–86 and 5–87 were submitted on February 17, 1987, by the Tennessee Department of Health and Environment.

(i) Incorporation by reference.

(A) Board Order 35–86, Opacity variance for Hassel and Hughes Lumber Company, which was approved on November 19, 1986.

(B) Board Order 5–87, variance for Texas Gas Transmission Corporation which was approved on January 21, 1987.

(ii) Other material—none.

(78) A variance from Rule 1200–3–18.21 was submitted to EPA on December 30, 1986, by the Tenessee Department of Health and Environment.

(i) Incorporation by referemce.

(A) A variance for coating bicycles at Murray Ohio Manufacturing Company granted by the Tennessee Department of Health and Environment Air Pollution Control Board, approved on November 19, 1986.

(ii) Additional material—none.

(79) A variance from Rule 1200–3–18–.04(8) was submitted to EPA on January 6, 1988, by the Tennessee Department of Health and Environment.

(i) Incorporation by reference.

(A) Tennessee Department of Health and Environment, Division of Air Pollution Control, Board Order 08–87 approved on August 13, 1987.

(B) Letter of January 6, 1988, from the Tennessee Department of Health and Environment.

(ii) Other materials—none.

(80) A variance from Rule 1200–3–18–.04(8) was submitted to EPA on January 6, 1988, by the Tennessee Department of Health and Environment.

(i) Incorporation by reference.

(A) Tennessee Department of Health and Environment, Division of Air Pollution Control, Board Order 11–87 approved on August 13, 1987.

(B) Letter of January 6, 1988, from the Tennessee Department of Health and Environment.

(ii) Other materials—none.

(81) A variance from Rule 1200–3–18–.04(8) was submitted to EPA on January 6, 1988, by the Tennessee Department of Health and Environment.

(i) Incorporation of reference.

(A) Tennessee Department of Health and Environment, Division of Air Pollution Control, Board Order 29–87 approved on December 10, 1987.

(B) Letter of January 6, 1988, from the Tennessee Department of Health and Environment.

(ii) Other materials—none.

(82) A variance from Rule 1200–3–18–.04(8) was submitted to EPA on February 25, 1988, by the Tennessee Department of Health and Environment.

(i) Incorporation by reference.

(A) Tennessee Department of Health and Environment, Division of Air Pollution Control, Board Order 2–88 approved on February 18, 1988.

(B) Letter of February 25, 1988, from the Tennessee Department of Health and Environment.

(ii) Other materials-none.

(83) A variance from Rule 1200–3–18–.04(8) was submitted to EPA on January 6, 1988, by the Tennessee Department of Health and Environment.

(i) Incorporation by reference.

(A) Tennessee Department of Health and Environment, Division of Air Pollution Control, Board Order 27–87 approved on December 10, 1987.

(B) Letter of January 6, 1988, from the Tennessee Department of Health and Environment.

(ii) Other materials—none.

(84) A variance from Rule 1200–3–18–.04(8) was submitted to EPA on January 6, 1988, by the Tennessee Department of Health and Environment.

(i) Incorporation by reference.

(A) Tennessee Department of Health and Environment, Division of Air Pollution Control Board Order 19–87 approved on October 2, 1987.

(B) Letter of January 6, 1988, from the Tennessee Department of Health and Environment.

(ii) Other materials—none.

(85) Board Orders 10–87 and 15–87, incorporating the Prevention of Significant Deterioration modeling guideline in the State of Tennessee and Nashville/Davidson County regulations, submitted on January 6, 1988 by the Tennessee Department of Health and Environment.

(i) Incorporation by reference.

(A) Board Order 10–87, revision to the Prevention of Significant Deterioration modeling guideline for the State of Tennessee, which was approved on August 13, 1987.

(B) Board Order 15–87, revision to the Prevention of Significant Deterioration modeling guideline for Nashville/Davidson County, which was approved on August 13, 1987.

(C) Letter of January 6, 1988 from the Tennessee Department of Health and Environment.

(ii) Other material—none.

(86) Board Order 1–87 concerning Legally Enforceable Limits and Schedules for the Metropolitan Nashville and Davidson County portion of the Tennessee State Implementation Plan for Total Suspended Particulates, was submitted on February 17, 1987, by the Tennessee Department of Health and Environment.

(i) Incorporation by reference.

(A) Board Order 1–87, and amendments to §2.12.1.D.8, ''Legally Enforceable Limits and Schedules'', of the Metropolitan Nashville and Davidson County portion of the Tennessee State Implementation Plan for Total Suspended Particulates, approved on January 21, 1987.

(ii) Other material—none.

(87) A certificate of alternate control of volatile organic compound emissions for Avco Aerostructures/Textron was submitted to EPA on February 25, 1988, by the State of Tennessee for the Metropolitan Health Department of Nashville and Davidson County.

(i) Incorporation by reference.

(A) Letter of February 25, 1988, from the State of Tennessee Air Pollution Control Board.

(B) Certificate of alternate control of volatile organic compound (VOC) emissions for Avco Aerostructures/Textron, adopted by the Metropolitan Board of Health on February 9, 1988.

(C) Avco Aerostructures/Textron operating permit numbers 42–3, 42–4, 42–5, 42–6, 42–7, 42–8, 42–9, 42–10, 42–18, 42–19.

(88) Rule 1200–3–19–.06, Logs for Operating Hours, submitted on February 19, 1980, by the Tennessee Department of Health and Environment.

(i) Incorporation by reference.

(A) Rule 1200–3–19–.06, Logs for Operating Hours which became State-effective February 14, 1980.

(B) Letter of February 19, 1980, from the Tennessee Department of Public Health.

(ii) Other material—none.

(89) Revised Memphis and Shelby County regulations (Board Order 17–86) submitted on July 7, 1986.

(i) Incorporation by reference.

(A) Memphis and Shelby County regulations, Board Order 17–86, which became State-effective June 18, 1986. The regulations that are approved are as follows:

Sections 16–46
Sections 16–47
Sections 16–48
Sections 16–49 except for Rule 1200–3–3–.05 (the last sentence)
Sections 16–50
Sections 16–51
Sections 16–56
Sections 16–57
Sections 16–58
Sections 16–59
Sections 16–71
Sections 16–77 except for Rules 1200–3–9.01(3); 1200–3–9–.01(4)(b)(6)(the phrase, ''.except the activities of any vessel.''); 1200–3–9–.01(4)(o)(2); 1200–3–9–.02(1)–(3),(6)–(10) and the last sentence of (5); 1200–3–9–.03(2)(the last sentence), .03(2)(a), and .03(2)(b)
Sections 16–78 except for Rules 1200–3–7–.03(2); 1200–3–7–.04(2)(the last sentence); 1200–3–7–.07(2)–(5); 1200–3–7–.09
Sections 16–79
Sections 16–80
Sections 16–82 except for Rules 1200–3–14–.02; 1200–3–14–.03(5) and (6)

Sections 16–83 except for Rules 1200–3–5–.01(2) and (3); 1200–3–5–.03(2)
Sections 16–84
Sections 16–85
Sections 16–86
Sections 16–87
Sections 16–88 except paragraph(b)
Sections 16–89
Sections 16–90
Sections 16–91

(B) Letter of July 7, 1986, from the Tennessee Department of Health and Environment.

(ii) Other material—none.

(90) An amendment to Section 7–1 of the Nashville/Davidson County regulations was submitted on June 15, 1988, by Tennessee's Department of Health and Environment.

(i) Incorporation by reference.

(A) Tennessee Department of Health and Environment, Division of Air Pollution Control, Board Order 11–88 approved on June 8, 1988.

(B) Letter of June 15, 1988, from the Tennessee Department of Health and Environment.

(ii) Other material-none.

(91) Board Orders 13–87, deleting five operating permits for Tennessee Eastman Company from the SIP, and 14–87, deleting an operating permit for General Smelting and Refining from the SIP, submitted on January 6, 1988.

(i) Incorporation by reference.

(A) Board Order 13–87, for Tennessee Eastman Company, approved August 13, 1987.

(B) Board Order 14–87, for General Smelting and Refining Company, approved August 13, 1987.

(C) Letter of January 6, 1988, from the Tennessee Department of Health and Environment.

(ii) Other material—none.

(92) Revised Knox County regulations: Tennessee Air Pollution Control Board Order 17–86, submitted on July 7, 1986; Board Order 27–86, submitted on October 7, 1986; and Board Order 2–87, submitted on February 17, 1987.

(i) Incorporation by reference. (A) Tennessee Air Pollution Control Board Orders 17–86, and Knox County regulations 12.0–20.0, 22.0, 24.0, 25.0, except 25.2.B, 26.0–41.0, and 46.0, which became State effective June 18, 1986; 27–86, and Knox County regulation 35.3 and amendments to 41.1, which became State effective September 17, 1986; and 2–87 and Knox County regulation 47.0, which became State effective January 21, 1987.

(ii) Additional material. (A) Letters of July 7, 1986, October 7, 1986, and February 17, 1987, from the Tennessee Department of Health and Environment, submitting the Knox County SIP revisions.

(93) Stack height regulations were submitted to EPA on August 18, 1986, by the Tennessee Department of Health and Environment.

(i) Incorporation by reference.

(A) Tennessee Air Pollution Control Regulations, Good Engineering Practice Stack Height Regulations, which became effective on November 22, 1987.

(ii) Other material—none.

(94) A revision of Rule 1200–3–18–.02(m) was submitted to EPA on January 6, 1988, by the Tennessee Department of Health and Environment.

(i) Incorporation by reference.

(A) Amendment to Tennessee Department of Health and Environment rules (revision of Paragraph 1200–3–18–.02(m)), State-effective on November 10, 1986.

(ii) Other material—none.

(95) Rules 1200–3–6–.05(4), Wood Fired Fuel Burning Equipment, 1200–3–19–.11(3)(b), Particulate Matter Emissions Regulations for the Bristol Nonattainment Area, and 1200–3–19–.12(2)(g), Particulate Matter Emission Regulations for Air Contaminant Sources in or Significantly Impacting the Particulate Nonattainment Control Areas in Campbell County, which were submitted January 6, 1988.

(i) Incorporation by reference.

(A) Rule 1200–3–6–.05(4), Wood Fired Fuel Burning Equipment, which is State-effective, May 30, 1987.

(B) Rule 1200–3–19–.11(3)(b), Particulate Matter Emission Regulations for the Bristol Nonattainment Area, which is State-effective May 30, 1987.

(C) Rule 1200–3–19–.12(2)(g), Particulate Matter Emission Regulations for Air Contaminant Sources in or Significantly Impacting the Particulate Nonattainment Control Areas in Campbell County, which is State-effective May 30, 1987.

(ii) Other material—none.

(96) Tennessee Air Pollution Control Board Order 03–89 approving permits

amended by agreed orders for fourteen sources was submitted to EPA on May 16, 1989, by the Tennessee Department of Health and Environment.

(i) Incorporation by reference. (A) Chattanooga-Hamilton County Air Pollution Control Board Agreed Order, Docket No. 582.01, Astec Industries, Inc., effective March 20, 1989.

(B) Chattanooga-Hamilton County Air Pollution Control Board Agreed Order, Docket No. 582.02, Browning-Ferris Industries, effective March 20, 1989.

(C) Chattanooga-Hamilton County Air Pollution Control Board Agreed Order, Docket No. 582.03, The Landes Company Inc., effective March 20, 1989.

(D) Chattanooga-Hamilton County Air Pollution Control Board Agreed Order, Docket No. 582.04, Chattanooga Armature Works, effective March 20, 1989.

(E) Chattanooga-Hamilton County Air Pollution Control Board Agreed Order, Docket No. 582.05, Combustion Engineering, Inc., effective March 20, 1989.

(F) Chattanooga-Hamilton County Air Pollution Control Board Agreed Order, Docket No. 582.06, Cumberland Corporation, effective March 20, 1989.

(G) Chattanooga-Hamilton County Air Pollution Control Board Agreed Order, Docket No. 582.07, Ekco/Glaco, Inc., effective March 20, 1989.

(H) Chattanooga-Hamilton County Air Pollution Control Board Agreed Order, Docket No. 582.08, Electrical Systems, Inc., effective March 20, 1989.

(I) Chattanooga-Hamilton County Air Pollution Control Board Agreed Order, Docket No. 582.09, Mueller Company, effective March 20, 1989.

(J) Chattanooga-Hamilton County Air Pollution Control Board Agreed Order, Docket No. 582.10, McKee Baking Company, effective March 20, 1989.

(K) Chattanooga-Hamilton County Air Pollution Control Board Agreed Order, Docket No. 582.11, Royal, Incorporated, effective March 20, 1989.

(L) Chattanooga-Hamilton County Air Pollution Control Board Agreed Order, Docket No. 582.12, Tuftco Corporation, effective March 20, 1989.

(M) Chattanooga-Hamilton County Air Pollution Control Board Agreed Order, Docket No. 582.13, Sherman & Reilly, Inc., effective March 20, 1989.

(N) Chattanooga-Hamilton County Air Pollution Control Board Agreed Order, Docket No. 582.14, United States Stove Company, effective March 20, 1989.

(O) Board Order 03–89 of the Tennessee Air Pollution Control Board which adopts fourteen miscellaneous metal parts coaters' permits for Chattanooga-Hamilton County on May 10, 1989.

(ii) Other materials. (A) Letter of May 16, 1989, from the Tennessee Department of Health and Environment.

(97) Revisions to the Nashville/Davidson County portion of the Tennessee SIP which included PM_{10} regulations (Board Orders 10–88 and 88–15) submitted on December 14, 1988.

(i) Incorporation by reference. (A) Revisions to Nashville/Davidson County Regulation No. 3, ''New Source Review'' and Board Order 10–88 approved June 8, 1988. The following regulations are approved:

Section 3–1–Definition—(dd), (ee) and (gg)
Section 3–2–Registration and Permits—(b)(2) and (e)
Section 3–3–Prevention of Significant Deterioration (PSD) Review—(a)(1), (e)(2), (f), (g)(6), (g)(7) and (g)(8)

(B) Revisions to Nashville/Davidson County Metropolitan Code Chapter 4 Subchapter 1 ''Air Pollution Control'' and Board Order 88–15 approved on November 16, 1988. The following regulations are approved:

Section 4–1–1–Definitions—PM_{10} Emissions, Particulate Matter Emissions, Total Suspended Particulate, and Particulate Matter
Section 4–1–6–Incinerator Regulations—(f)
Section 4–1–16–Registration and Permits—(c) and f(3)
Section 4–1–18–Ambient Air Quality Standards

(98) Nashville/Davidson County stack height provisions (Board Order 28–86) submitted as revisions to the Tennessee SIP on October 7, 1986.

(i) Incorporation by reference.

(A) Tennessee Air Pollution Control Board Order 28–86 and Nashville/Davidson County Regulation No. 3, Sections 3–1 and 3–2 introductory paragraph which was approved September 17, 1986.

(ii) Other material.

(A) Letter of October 7, 1986, from the Tennessee Department of Health and Environment.

(99) PM_{10} revisions to the Knox County portion of the Tennessee SIP adopted in Board Order 06–89 and submitted on August 2, 1989.

(i) Incorporation by reference.

(A) PM_{10} revisions to the Knox County regulations and Board Order 06–89 which became State-effective July 19, 1989. The following regulations are approved:

Section 13, Definitions,
13.56 PM_{10}
13.57 PM_{10} emissions
13.58 *Total Suspended Particulate*
Section 14.0, Ambient Air Quality Standards, Table I
Section 14.4A, Procedures for Ambient Sampling and Analysis
Section 36.1, Emergency Regulations (Episode Criteria), B., C. and D.

(ii) Additional material—none.

(100) Revisions to the Hamilton County portion of the Tennessee SIP which approved the regulations for Hamilton County, the City of Chattanooga and the nine other municipalities in Hamilton County adopted in Board Order 05–89 and submitted on July 20, 1989.

(i) Incorporation by reference. (A) The entire set of regulations, ''The Hamilton County Air Pollution Control Regulation'', as submitted on July 20, 1989, except for section 9, Rules 15, 16, 18.2(q)(2), and 25.21.

(B) The entire set of regulations, ''The Chattanooga Air Pollution Control Ordinance'', as submitted on July 20, 1989, except for section 4–41, Rules 15, 16, 18.2(o)(2), and 25.21, and as amended by Ordinances Nos. 8413, dated January 15, 1985; 8675, dated July 29, 1986; and 8705, except sections 5 and 6, dated September 30, 1986.

(C) The entire set of regulations, ''The Collegedale Air Pollution Control Ordinance'', as submitted on July 20, 1989, except for section 8–541, Rules 15, 16, and 18.2(o)(2).

(D) The entire set of regulations, ''The East Ridge Air Pollution Control Ordinance'', as submitted on July 20, 1989, except for section 8–741, Rules 15, 16, and 18.2(o)(2).

(E) The entire set of regulations, ''The Lakesite Air Pollution Control Ordinance'', as submitted on July 20, 1989, except for section 41, Rules 15, 16, and 18.2(o)(2).

(F) The entire set of regulations, ''The Lookout Mountain Air Pollution Control Ordinance'', as submitted on July 20, 1989, except for section 41, Rules 15, 16, and 18.2(o)(2).

(G) The entire set of regulations, ''The Red Bank Air Pollution Control Ordinance'', as submitted on July 20, 1989, except for section 8–341, Rules 15, 16, and 18.2(o)(2).

(H) The entire set of regulations, ''The Ridgeside Air Pollution Control Ordinance'', as submitted on July 20, 1989, except for section 41, Rules 15, 16, and 18.2(o)(2).

(I) The entire set of regulations, ''The Signal Mountain Air Pollution Control Ordinance'', as submitted on July 20, 1989, except for section 41, Rules 15, 16, and 18.2(o)(2).

(J) The entire set of regulations, ''The Soddy-Daisy Air Pollution Control Ordinance'', as submitted on July 20, 1989, except for section 8–141, Rules 15, 16, and 18.2(o)(2).

(K) The entire set of regulations, ''The Walden Air Pollution Control Ordinance'', as submitted on July 20, 1989, except for section 41, Rules 15, 16, and 18.2(o)(2).

(L) Tennessee Air Pollution Control Board Order 05–89, which became State-effective July 19, 1989, adopted regulations for Hamilton County, the City of Chattanooga and the nine other Hamilton County municipalities as revisions to the Hamilton County portion of the Tennessee SIP.

(ii) Additional material. (A) The July 20, 1989, submittal from the Tennessee Department of Health and Environment submitting the regulations for Hamilton County, Chattanooga and the nine other Hamilton County municipalities as revisions to the Hamilton County portion of the Tennessee SIP.

(101) Revisions to the Nashville/Davidson County portion of the Tennessee SIP submitted on October 3, 1989.

(i) Incorporation by reference.

(A) Tennessee Air Pollution Control Board Order 10–89 and Nashville/Davidson County Metropolitan Health Department Regulation No. 10, ''Infectious Waste Incinerators'' which became State effective September 13, 1989.

(ii) Other material.

(A) The October 3, 1989 letter from the Tennessee Department of Health and Environment submitting Regulation No. 10.

(102) [Reserved]

(103) A revision to the Metropolitan-Davidson County portion of Tennessee's SIP, Regulation No. 7—Regulation for Control of Volatile Organic Compounds was submitted on February 16, 1990.

(i) Incorporation by reference.

(A) Regulation No. 7—Regulation for the Control of Volatile Organic Compounds, except Section 7–22, effective February 14, 1990.

(ii) Other material.

(A) Letter of February 16, 1990 from the Tennessee Department of Health and Environment.

(104) The Tennessee Department of Conservation submitted a Board order including a certificate of alternate control and revised permits for the Nissan Motor Manufacturing facility located in Smyrna, Tennessee, to EPA on February 19, 1991, with revised information provided on April 29, 1991.

(i) Incorporation by reference.

(A) Nissan Motor Manufacturing Corporation USA operating permit numbers 029538P, 029539P, 029540P, 029541P, 029543P and 029544P which were issued on July 30, 1990, and 030180P which was issued on September 17, 1990.

(ii) Other materials.

(A) Letters of February 19, 1991, and April 29, 1991, from the Tennessee Department of Conservation.

(105) Amendments to the Nashville/Davidson County portion of Tennessee's SIP, Regulation No. 7—Regulation for Control of Volatile Organic Compounds submitted on July 3, 1991, October 4, 1991, and January 2, 1992.

(i) *Incorporation by reference.*

(A) Regulation No. 7—Regulation for the Control of Volatile Organic Compounds, effective December 10, 1991.

(ii) *Other material.*

(A) Letter of July 3, 1991, from the Metropolitan Health Department for Nashville/Davidson County.

(B) Letter of October 4, 1991, from the Metropolitan Health Department for Nashville/Davidson County.

(C) Letter of January 2, 1991, from the Metropolitan Health Department for Nashville/Davidson County.

(106) Amendments to the Knox County portion of Tennessee's SIP, submitted on January 4, 1991.

(i) Incorporation by reference.

(A) Amendments to Regulations 25.2B, 29.1B, 17.4E, 18.1, 19.1, 47.3C, effective December 13, 1990.

(ii) Other material.

(A) Letter of January 4, 1991, from the Tennessee Department of Health and Environment.

(107) Revisions to the New Johnsonville SO_2 portion of the Tennessee State Implementation Plan submitted on August 2, 1983, by the State of Tennessee through the Tennessee Air Pollution Control Board.

(i) Incorporation by reference.

(A) Revisions to the following Tennessee Air Pollution Control Regulations which became State-effective on December 13, 1982:

1200–3–3–.05—Achievement

(B) Revisions to the following Tennessee Air Pollution Control Regulations which became State-effective on December 17, 1982:

1200–3–19–.14—Sulfur Dioxide Emission Regulation for the New Johnsonville Nonattainment Area

(C) Revisions to the following Tennessee Air Pollution Control Regulations which became State-effective on August 1, 1984:

1200–3–14–.01(2)—General Provisions

1200–3–14–.02(1)(a)—Non-process Emissions Standards

(ii) Other material.

None

(108) Revisions to the Memphis-Shelby County portion of the Tennessee SIP submitted on July 3, 1991, and June 15, 1992, by the State of Tennessee through the Tennessee Air Pollution Control Board.

(i) *Incorporation by reference.*

(A) Permit for battery receiving and breaking operation for Refined Metals Corporation which became effective on June 12, 1991: Permit No. 0212–01P.

(B) Permit for the refining kettles/casting area for Refined Metals Corporation which became effective on June 12, 1991: Permit No. 0212–04P.

(C) Permit for the blast furnace/dust furnace for Refined Metals Corporation which became effective on June 10, 1992: Permit No. 0212–03P(R).

(ii) *Other material.*

(A) None.

(109) Addition of Section 45, Prevention of Significant Deterioration to the Knox County portion of the Tennessee SIP, submitted and revised on January 29, 1992 and June 15, 1992, respectively.

(i) Incorporation by reference.

(A) Amendments to Section 45.0 of the Knox County regulations were adopted on June 10, 1992.

(ii) Other material. None.

(110) Revisions to the VOC portion of the Knox County portion of the Tennessee SIP to correct deficiencies, which were submitted on January 4, 1991, January 29, 1992, and June 15, 1992, respectively.

(i) Incorporation by reference.

(A) Amendments to the following Sections of the Knox County regulations—13.15, 46.1–B, 46.4–B.7, 46.4–B.8, 46.4–B.9, 46.4–I, 46.6–D.6, 46.8–B.1.d, 46.11–B.5, 46.11–B.6—were adopted on December 13, 1990.

(B) Amendments to the following Sections of the Knox County regulations—27.2–A and 46.2—were adopted on November 13, 1991.

(C) Amendments to the following Sections of the Knox County regulations—26.5–B, 27.2, 28.1–A.4, 46.2–A.7, 46.2–A.34, 46.6–D.7, 46.17–D, 46.19, 46.20, and 46.21—were adopted on June 10, 1992.

(ii) Other material.

(A) Letter of January 4, 1991, from the Tennessee Department of Conservation and Environment.

(B) Letter of January 29, 1992, from the Tennessee Department of Conservation and Environment.

(C) Letter of June 15, 1992, from the Tennessee Department of Conservation and Environment.

(111) The maintenance plan for Knox County submitted by the Tennessee Department of Environment and Conservation on August 26, 1992, as part of the Tennessee SIP.

(i) Incorporation by reference.

(A) Knox County Ozone Attainment Redesignation State Implementation Plan Revision Support Document, which became State-effective on August 12, 1992; and

(B) Emissions Inventory Projections (1990–2004) for Knox County, which became State-effective on August 12, 1992.

(ii) Other material.

(A) Letter dated August 26, 1992, from the Tennessee Department of Environment and Conservation.

(112)–(113) [Reserved]

(114) On July 13, 1990, and February 26, 1993, Nashville-Davidson county submitted revisions to the Nashville-Davidson county portion of the Tennessee SIP through the Tennessee Department of Air Pollution Control which were intended to bring their regulations into conformity with EPA's New Source Review (NSR) requirements and EPA's Prevention of Significant Deterioration (PSD) increments for nitrogen dioxide (NO_2). The USEPA is granting limited approval to the revisions to the Nashville-Davidson county NSR regulations because the revised regulations strengthen the SIP.

(i) Incorporation by reference.

(A) Amendments to sections 3–1(e) and 3–3(e)(2)(iii) of the Nashville-Davidson county portion of the Tennessee regulations were adopted by the Nashville Metropolitan Board of Health on April 12, 1990.

(B) Amendments to sections 3–1(d), 3–1(t), 3–1(x)(7),3–1(ee)(3), 3–1(gg), 3–1(hh), 3–2(b)(2)(ii), and 3–2(b)(3) were adopted by the Nashville Metropolitan Board of Health on December 8, 1992.

(ii) Other material—none.

(115) Revisions to the rules in the State's portion of the Tennessee State Implementation Plan (SIP) regarding control of volatile organic compounds (VOCs) were submitted on June 25, 1992, and March 22, 1993, by the Tennessee Department of Environment and Conservation. Revisions to the rules in the Memphis-Shelby County portion of the Tennessee SIP regarding control of VOCs were submitted on November 5, 1992, and April 22, 1993, by the State on behalf of Memphis-Shelby County. In these submittals, Memphis-Shelby County adopted State regulations by reference.

(i) Incorporation by reference.

(A) Revisions to the following State of Tennessee regulations were effective on June 7, 1992.

(*1*) Rule 1200–3–2–.01 General Definitions: Subparagraphs (1)(b), (c), (z), (aa), (gg), (vv), (zz), (ccc), (lll), (mmm), (nnn), (eeee), (ffff), (gggg), and (iiii).

(*2*) Rule 1200–3–18–.01 Purposes and General Provisions: Paragraphs (1), (3), (4) introductory paragraph and (4)(a), (5), and (6).

(*3*) Rule 1200–3–18–.02 Definitions: Subparagraphs (1)(a), (b), (c), (f), (m), (ii), and (jj).

(*4*) Rule 1200–3–18–.04 Alternate Emission Standard.

(*5*) Rule 1200–3–18–.05 Automobile and Light Duty Truck Manufacturing.

(*6*) Rule 1200–3–18–.06 Paper Coating: Subparagraph (1)(b) and paragraphs (2), (3), and (4).

(*7*) Rule 1200–3–18–.07 Petroleum Liquid Storage: Introductory paragraph of paragraph (4).

(*8*) Rule 1200–3–18–.08 Bulk Gasoline Plants: Paragraphs (2) and (3).

(*9*) Rule 1200–3–18–.09 Bulk Gasoline Plants: Paragraph (2), subparagraph (3)(d), and paragraph (6).

(*10*) Rule 1200–3–18–.10 Gasoline Service Stations Stage I: Paragraphs (2), (3) (except subparagraph (3)(a)), (4), and (6).

(*11*) Rule 1200–3–18–.11 Petroleum Refinery Sources: Paragraph (2).

(*12*) Rule 1200–3–18–.12 Can Coating: Paragraphs (3) and (4).

(*13*) Rule 1200–3–18–.13 Coil Coating: Paragraphs (1), (2), and (4).

(*14*) Rule 1200–3–18–.14 Fabric and Vinyl Coating: Subparagraph (1)(b) and paragraphs (2), (3), and (4).

(*15*) Rule 1200–3–18–.15 Metal Furniture Coating: Paragraphs (3) and (4).

(*16*) Rule 1200–3–18–.16 Surface Coating of Large Appliances: Paragraphs (3), (4), and (5).

(*17*) Rule 1200–3–18–.17 Magnet Wire Coating: Paragraphs (2) and (3).

(*18*) Rule 1200–3–18–.18 Solvent Metal Cleaning: Paragraphs (2) and (3).

(*19*) Rule 1200–3–18–.20 Flat Wood Paneling Coating: Introductory paragraph of paragraph (2), paragraphs (4), (5), and (6).

(*20*) Rule 1200–3–18–.21 Surface Coating of Miscellaneous Metal Parts and Products: Subparagraphs (1)(g) and (h), paragraph (2), subparagraph (5)(1), and paragraphs (6), (7), and (8).

(*21*) Rule 1200–3–18–.22 Leaks from Gasoline Tank Trucks and Vapor Collection Systems: Introductory paragraph of paragraph (2), subparagraph (2)(a), paragraphs (3), (4), (5), and (6).

(*22*) Rule 1200–3–18–.23 Petroleum Refinery Equipment Leaks: Introductory paragraph of paragraph (2), subparagraph (2)(a), and paragraph (4).

(*23*) Rule 1200–3–18–.25 Petroleum Liquid Storage in External Floating Roof Tanks: Introductory paragraph of paragraph (2), and paragraph (5).

(*24*) Rule 1200–3–18–.26 Manufacture of Pneumatic Rubber Tires: Introductory paragraph of paragraph (2), paragraphs (4), (5), and (6).

(*25*) Rule 1200–3–18–.27 Manufacture of Synthesized Pharmaceutical Products: Introductory paragraph of paragraph (2), paragraphs (3), (4), and (5).

(*26*) Rule 1200–3–18–.28 Perchloroethylene Dry Cleaning: Introductory paragraph of paragraph (2), paragraphs (4) and (5), and subparagraph (6)(d).

(*27*) Rule 1200–3–18–.29 Graphic Arts–Rotogravure and Flexography: Introductory paragraph of paragraph (2), subparagraph (2)(b), paragraphs (5) and (6).

(*28*) Rule 1200–3–18–.30 Surface Coating of Aerospace Components.

(*29*) Rule 1200–3–18–.40 Regulations Required in Nonattainment Areas.

(*30*) Rule 1200–3–18–.41 Compliance Schedules.

(*31*) Rule 1200–3–18–.42 Individual Compliance Schedules: Paragraphs (1), (2), (3), and (4).

(*32*) Rule 1200–3–18–.43 General Provisions for Test Methods and Procedures.

(*33*) Rule 1200–3–18–.44 Determination of Volatile Content of Surface Coatings.

(*34*) Rule 1200–3–18–.45 Test Method for Determination of Volatile Organic Compound Emissions Control Systems Efficiency.

(*35*) Rule 1200–3–18–.46 Test Method for Determination of Solvent Metal Cleaning Organic Compound Emissions.

(*36*) Rule 1200–3–18–.47 Test Procedure for Determination of VOC Emissions from Bulk Gasoline Terminals.

(B) Revisions to the following State of Tennessee regulations were effective on March 18, 1993.

(*1*) Rule 1200–3–21–.01 General Alternate Emission Standard: Paragraphs (1), (2), (3), (4), and (9).

(*2*) Rule 1200–3–21–.02 Applicability.

(ii) Additional material—none.

(116) The Tennessee Department of Environment and Conservation submitted a SIP revision that amended Rule 1200–3–18 which was submitted to EPA on May 18, 1993. These amendments add Stage II provisions to this rule.

(i) Incorporation by reference.

(A) Rule 1200–3–18–.24 which became State-effective June 21, 1993.

(B) Revisions to the Davidson County portion of the Tennessee SIP. Rule 7, Section 7–1 (11), Rule 7, Section 7–13, Rule 7, Section 7–25(b) which became state effective on November 4, 1992.

(ii) Other material. None.

(117) The Tennessee Department of Environment and Conservation has submitted revisions to the Tennessee State Implementation Plan. These revisions address the requirements of section 507 of Title V of the CAA and establish the Small Business Stationary Source Technical and Environmental Assistance Program (PROGRAM).

(i) Incorporation by reference.

(A) Revision to the Tennessee State Implementation Plan to Incorporate Small Business Assistance Program as Required by the Clean Air Act Amendments of 1990, approved by the Tennessee Air Pollution Control Board on February 10, 1993.

(ii) Additional information—None.

(118) [Reserved]

(119) The minor source operating permit program for Knox County, submitted by the Tennessee Division of Air Pollution Control on November 12, 1993 as part of the Tennessee SIP.

(i) Incorporation by reference.

(A) Revisions to Regulations 17.4.E, 18.1.B, 19.1.B, 25.3.I., and 47.3.C. of the Knox County portion of the Tennessee SIP, as adopted by the Knox County Air Pollution Control Board on October 13, 1993.

(ii) Other material. None.

(120) Revisions to the Tennessee Division of Air Pollution Control emergency episode plan, submitted on September 1, 1993. These revisions incorporate changes within chapter 1200–3–15-.02 of the Tennessee SIP into the existing regulations which are required in 40 CFR 52.1270.

(i) Incorporation by reference.

(A) Tennessee Air Pollution Control Regulations, Chapter 1200–3–15-.02, paragraphs (3), (4), and (5), effective June 26, 1993.

(121) The redesignation and maintenance plan for Memphis/Shelby County submitted by the Memphis/Shelby County Health Department on October 30, 1992, as part of the Tennessee SIP. On October 15, 1993, and May 6, 1994, Tennessee Department of Environment and Conservation submitted a supplement to the above maintenance plan.

(i) Incorporation by reference.

(A) Memphis/Shelby County Carbon Monoxide Ten Year Maintenance Plan effective on October 13, 1993.

(B) Emissions Inventory Projections for Memphis/Shelby County effective on October 13, 1993.

(ii) Other material. None.

(122) The maintenance plan and emission inventory for the Memphis and Shelby County Area which includes Shelby County and the City of Memphis submitted by the Tennessee Department of Environment and Conservation on November 12, 1992, and March 31, 1994, as part of the Tennessee SIP.

(i) Incorporation by reference.

(A) Amendment to the Original Submittal of Nonregulatory Amendment to State Implementation Plan for Shelby County Redesignation from Nonattainment to Attainment Classification for Ozone submitted March 31, 1994, and prepared by the Memphis and Shelby County Health Department, Pollution Control Section for the Tennessee Department of Conservation. The effective date is March 9, 1994, for the following provisions:

Section I—Requirement One—Air Quality Data Shows Area Meets NAAQS

Section IV—Requirement Four—Maintenance Plan

Attachment F:

Shelby County Emission Projections Volatile Organic Compounds (Summer Season)

Shelby County Emission Projections 1990–2004 Nitrogen Oxides (Summer Season)

(ii) Other material. None.

(123) A revised chapter 1200–3–18 ''Volatile Organic Compounds'' was submitted by the Tennessee Department of Air Pollution Control (TDAPC) to EPA on May 18, 1993, to replace the current chapter 1200–3–18 in the Tennessee SIP. This chapter had been revised to meet the requirements of the 1990 Clean Air Act Amendments commonly referred to as the ''VOC RACT Catch-Up'' requirements. Rule 1200–3–18–.28 ''Perchloroethylene Dry Cleaners'' which was federally approved in 59 FR 18310 on April 18, 1994, will remain effective.

(i) Incorporation by reference.

(A) Revisions to the State of Tennessee regulations which were effective on April 22, 1993.

(*1*) Chapter 1200–3–18 ''Volatile Organic Compounds,'' except for subchapter 1200–3–18–.24, subparagraph 1200–3–18–.03 (2)(b), subparagraph 1200–3–18–.20 (1)(b)(2)(vii), and subparagraphs 1200–3–18–.79 (1)(a)(3), (1)(c), and (1)(d).

(ii) Other material. None.

(124) On August 17, 1994, the Tennessee Department of Environment and Conservation submitted revisions to the new source review requirements in the Tennessee Division of Air Pollution Control Regulations. These revisions incorporate changes to Chapter 1200–3–9 by substituting for the present paragraph 1200–3–9-.01(5) of the Tennessee SIP with new requirements, which are required in the Clean Air Act as amended in 1990 and 40 CFR part 51, subpart I.

(i) Incorporation by reference. Tennessee Division of Air Pollution Control Regulations, Chapter 1200–3–9-.01(5) Growth Policy, effective August 15, 1994.

(ii) Other material. None.

(125) [Reserved]

(126) Modifications to the existing basic I/M program in Davidson County to implement an anti-tampering check, and to require testing of vehicles from model year 1975 and newer, submitted on March 17, 1994. Addition of a basic I/M program in the remainder of the middle Tennessee ozone nonattainment area, submitted on July 8, 1994.

(i) Incorporation by reference.

(a) Metropolitan Health Department Pollution Control Division Regulation 8, approved by the Tennessee Air Pollution Control Board on March 9, 1994.

(b) Regulation 1200–3–29, effective on September 8, 1993.

(ii) Other material. None.

(127) Revisions to the State of Tennessee Air Pollution Control Regulations submitted by the Tennessee Department of Environment and Conservation on April 18, 1995. These consist of revisions to the process emission standards for new and existing cotton gins. These revised regulations also provide an optional method of using selected controls to demonstrate compliance with the emission standards.

(i) Incorporation by reference.

(A) Tennessee Division of Air Pollution Control Regulations, Chapter 1200–3–7-.08(3) effective July 16, 1990.

(ii) Other material. None.

(128)–(129) [Reserved]

(130) Revisions to minor source operating permit rules for Nashville-Davidson County submitted by the Tennessee Department of Environment and Conservation on November 16, 1994.

(i) Incorporation by reference.

(A) Metropolitan Code of Law (M.C.L.) Chapter 10.56, Section 040, Paragraph F, effective October 4, 1994.

(ii) Other material. None.

(131) On November 12, 1993, the State submitted revisions to the Nashville/Davidson County portion of the Tennessee State Implementation Plan (SIP) on behalf of Nashville/Davidson County. These were revisions to the permit requirements for major sources of air pollution, including revisions to the general definitions, the permit requirements, and the exemptions. As a supplement to this submittal, on July 15, 1994, the State also submitted a request that the recodification of the entire air pollution control rule for Nashville/Davidson County be approved as part of the SIP. These revisions and recodification incorporate changes to Nashville's Chapter 10.56, which was previously Chapter 4–1–1, which are required in the Clean Air Act as amended in 1990 and 40 CFR part 51, subpart I.

(i) Incorporation by reference.

Code of Laws of the Metropolitan Government of Nashville and Davidson County, Tennessee, Chapter 10.56, Air Pollution Control, effective November 10, 1993, except for the following parts:

(A) Section 10.56.010, the definition of ''regulated pollutant'';

(B) Section 10.56.040, Paragraph (F);

(C) Section 10.56.050, Paragraphs (C), (D) and (E);

(D) Section 10.56.080.

(ii) Other material. None.

(132) Revisions to the Knox County Air Pollution Control Regulations submitted by the Tennessee Department of Environment and Conservation on June 28, 1994. These consist of revisions to appeals, judicial review, and violations of the air pollution regulations in Knox County.

(i) Incorporation by reference.

Knox County Air Pollution Control Regulations, Sections 29.1.B, 29.3, 30.1.A, and 30.1.D adopted May 25, 1994.

(133) On September 27, 1994, the State submitted revisions to the Nashville/Davidson County portion of the Tennessee State Implementation Plan (SIP) on behalf of Nashville/Davidson County. These were revisions to the new source review requirements in the Nashville/Davidson County regulations. These revisions incorporate changes to Regulation Number Three, Sections 3–1, 3–2 and 3–3 of the Nashville/Davidson County portion of the Tennessee SIP which bring this into conformance with the new requirements which are required in 40 CFR part 52, subpart I.

(i) Incorporation by reference.

Metropolitan Health Department Division of Pollution Control Regulation Number 3 New Source Review, as amended on August 9, 1994.

(ii) Other material. None.

(134) Revisions to the State of Tennessee Air Pollution Control Regulations submitted by the Tennessee Department of Environment and Conservation on June 21, 1991, and June 22, 1993. These consist of revisions to Chapter 1200–3–10 Required Sampling, Recording and Reporting, and Chapter 1200–3–14 Control of Sulfur Dioxide Emissions. Revisions to section 16–85 of the Memphis/Shelby County portion of the Tennessee SIP which adopt by reference changes made to Chapter 1200–3–10 of the Tennessee SIP.

(i) Incorporation by reference.

(A) Chapter 1200–3–14, effective March 21, 1993.

(B) Chapter 1200–3–10, effective March 13, 1993.

(C) Section 16–85 of the Memphis/Shelby County Health Department, Air Pollution Control Regulations effective October 23, 1993.

(ii) Other material. None.

(135) [Reserved]

(136) Revisions to the Chattanooga/Hamilton County Air Pollution Control Regulations submitted by the Tennessee Department of Environment and Conservation on May 18, 1993.

(i) Incorporation by reference.

(A) The Chattanooga City Code, Part II, Chapter 4, is revised as shown in the following paragraphs. These revisions were adopted on March 9, 1993.

(1) Section 4–2: the definitions for Best available control technology (BACT); Owner or operator of a demolition or renovation activity; Primary Air Quality Standards; and Secondary Air Quality Standards.

(2) Section 4–41: Rule 21, ''Ambient Air Quality Standards.''

(3) Section 4–41: Rule 25.2, subparagraph 33.

(B) The Hamilton County Air Pollution Control Regulation is revised as shown in the following paragraphs. These revisions were adopted on April 7, 1993.

(1) Section 16: the following definitions are added: Primary Air Quality Standards; Secondary Air Quality Standards; Owner or operator of a demolition or renovation activity; and Best available control technology (BACT).

(2) Section 9: Rule 25.2, subparagraph 33.

(3) Section 9: Rule 21, ''Ambient Air Quality Standards.''

(4) Section 25, ''Regulations cumulative.''

(C) The Soddy-Daisy Municipal Code, Title 8, *Health and Sanitation*, Chapter 1, *Air Pollution Control*, is revised as shown in the following paragraphs. These revisions were adopted on March 18, 1993.

(1) Section 8–102: the following definitions are added: Primary Air Quality Standards; Secondary Air Quality Standards; Owner or operator of a demolition or renovation activity; and Best available control technology (BACT).

(2) Section 8–141: Rule 25.2, subparagraph 21.

(3) Section 8–141: Rule 21, ''Ambient Air Quality Standards.''

(D) The Ridgeside Air Pollution Control Ordinance is revised as shown in the following paragraphs. These revisions were adopted on April 20, 1993.

(1) Section 2: the following definitions are added: Primary Air Quality Standards; Secondary Air Quality Standards; Owner or operator of a demolition or renovation activity; and Best available control technology (BACT).

(2) Section 41: Rule 25.2, subparagraph 21.

(3) Section 41: Rule 21, ''Ambient Air Quality Standards.''

(E) The Signal Mountain Air Pollution Control Ordinance is revised as shown in the following paragraphs. These revisions were adopted on March 8, 1993.

(1) Section 2: the following definitions are added: Primary Air Quality Standards; Secondary Air Quality Standards; Owner or operator of a demolition or renovation activity; and Best available control technology (BACT).

(2) Section 41: Rule 25.2, subparagraph 21.

(3) Section 41: Rule 21, ''Ambient Air Quality Standards.''

(F) The Walden Air Pollution Control Ordinance is revised as shown in the following paragraphs. These revisions were adopted on adopted March 9, 1993.

(1) Section 2: the following definitions are added: Primary Air Quality Standards; Secondary Air Quality Standards; Owner or operator of a demolition or renovation activity; and Best available control technology (BACT).

(2) Section 41: Rule 25.2, subparagraph 33.

(3) Section 41: Rule 21, ''Ambient Air Quality Standards.''

(G) The Lookout Mountain Air Pollution Control Ordinance is revised as shown in the following paragraphs. These revisions were adopted March 9, 1993.

(1) Section 2: the following definitions are added: Primary Air Quality Standards; Secondary Air Quality Standards; Owner or operator of a demolition or renovation activity; and Best available control technology (BACT).

(2) Section 41: Rule 25.2, subparagraph 21.

(3) Section 41: Rule 21, ''Ambient Air Quality Standards.''

(H) The Red Bank Municipal Code, Chapter 3, Title 8, is revised as shown in the following paragraphs. These revisions were adopted March 16, 1993.

(1) Section 8–302: the following definitions are added: Primary Air Quality Standards; Secondary Air Quality Standards; Owner or operator of a demolition or renovation activity; and Best available control technology (BACT).

(2) Section 8–341: Rule 25.2, subparagraph 21.

(3) Section 8–341: Rule 21, ''Ambient Air Quality Standards.''

(I) The Collegedale Municipal Code, Title 8, *Health and Sanitation,* Chapter 5, *Air Pollution Control,* is revised as shown in the following paragraphs. These revisions were adopted April 12, 1993.

(1) Section 8–502: the following definitions are added: Primary Air Quality Standards; Secondary Air Quality Standards; Owner or operator of a demolition or renovation activity; and Best available control technology (BACT).

(2) Section 8–541: Rule 25.2, subparagraph 33.

(3) Section 8–541: Rule 21, ''Ambient Air Quality Standards.''

(J) The Lakesite Municipal Code, Title 4, *Building, Utility, Housing and Air Pollution Control Codes,* Chapter 6, *Air Pollution Control Ordinance* is revised as shown in the following paragraphs. These revisions were adopted March 30, 1993.

(1) Section 2: the following definitions are added: Primary Air Quality Standards; Secondary Air Quality Standards; Owner or operator of a demolition or renovation activity; and Best available control technology (BACT).

(2) Section 41: Rule 25.2, subparagraph 21.

(3) Section 41: Rule 21, ''Ambient Air Quality Standards.''

(K) The East Ridge City Code, Title 8, Health and Sanitation, Chapter 7, Air Pollution Control is revised as shown in the following paragraphs. These revisions were adopted March 11, 1993.

(1) Section 8–702: the following definitions are added: Primary Air Quality Standards; Secondary Air Quality Standards; Owner or operator of a demolition or renovation activity; and Best available control technology (BACT).

(2) Section 8–741: Rule 25.2, subparagraph 21.

(3) Section 8–741: Rule 21, ''Ambient Air Quality Standards.''

(ii) Other material. None.

[37 FR 10894, May 31, 1972]

EDITORIAL NOTE: For FEDERAL REGISTER citations affecting § 52.2220, see the List of CFR Sections Affected in the Finding Aids section of this volume.

§ 52.2221 Classification of regions.

The Tennessee plan was evaluated on the basis of the following classifications:

Air quality control region	Pollutant				
	Particulate matter	Sulfur oxides	Nitrogen dioxide	Carbon monoxide	Photochemical oxidants (hydrocarbons)
Eastern Tennessee-Southwestern Virginia Interstate	I	I	III	III	III
Tennessee River Valley-Cumberland Mountains Intrastate	I	I	III	III	III
Middle Tennessee Intrastate	I	II	III	III	I
Western Tennessee Intrastate	I	III	III	III	III
Chattanooga Interstate	I	II	III	III	III
Metropolitan Memphis Interstate	I	III	III	III	I

[37 FR 10894, May 31, 1972, as amended at 39 FR 16347, May 8, 1974]

§ 52.2222 Approval status.

(a) With the exceptions set forth in this subpart, the Administrator approves Tennessee's plans for the attainment and maintenance of the national standards under section 110 of the Clean Air Act. Furthermore, the Administrator finds the plans thus far submitted satisfy all requirements of Part D, Title I, of the Clean Air Act as amended in 1977, except as noted below.

In addition, continued satisfaction of the requirements of Part D for the ozone portion of the SIP depends on the adoption and submittal of RACT requirements by July 1, 1980, for the sources covered by CTGs issued between January 1978 and January 1979 and on adoption and submittal by each subsequent January of additional RACT requirements for sources covered by CTGs issued by the previous January.

(b) New source review permits issued pursuant to section 173 of the Clean Air Act will not be deemed valid by EPA unless the provisions of Section V of the emission offset interpretative rule (Appendix S of 40 CFR part 51) are met.

(c) EPA approves Nashville/Davidson County, Tennessee's VOC Regulation No. 7, Section 7-1(11), which replaces the definition of Volatile Organic Compound (VOC) with a definition for VOC that is consistent with the EPA approved definition. The EPA approved definition defines VOC as any organic compound that participates in atmospheric photochemical reactions. However, it excludes organic compounds which have negligible photochemical reactivity. These compounds are as follows: methane, ethane, methyl chloroform (1,1,1-trichloroethane), CFC-113 (trichlorotrifluoroethane), methylene chloride, CFC 11 (trichlorofluoromethane), CFC-12 (dichlorodifluoromethane), CFC-22 (chlorodifluoromethane), FC-23 (trifluoromethane), CFC-114 (dichlorotetrafluoroethane), CFC-115 (chloropentafluoroethane). It is also our understanding that by adopting the EPA approved definition, Nashville/Davidson County, Tennessee will use EPA approved test methods for VOC.

[45 FR 53817, Aug. 13, 1980, as amended at 54 FR 4021, Jan. 27, 1989; 55 FR 18726, May 4, 1990]

§ 52.2223 Compliance schedules.

(a) *Federal compliance schedules—State program.* (1) Except as provided in paragraph (a)(5) of this section, the owner or operator of any boiler or furnace of more than 250 million Btu per hour heat input subject to the requirements of Chapter 1200–3–14 of the Rules and Regulations of Tennessee as contained in the Tennessee implementation plan, shall notify the Administrator, no

later than January 1, 1974, of his intent to utilize either low-sulfur fuel or stack gas desulfurization to meet these requirements.

(2) Any owner or operator of a stationary source subject to paragraph (a)(1) of this section who elects to utilize low-sulfur fuel shall be subject to the following compliance schedule:

(i) January 31, 1974: Submit to the Administrator a projection of the amount of fuel, by types, that will be substantially adequate to enable compliance with the applicable regulation on July 1, 1975, and for at least one year thereafter.

(ii) March 31, 1974: Sign contracts with fuel suppliers for fuel requirements as projected above.

(iii) April 30, 1974: Submit a statement as to whether boiler modifications will be required. If modifications will be required, submit plans for such modifications.

(iv) May 31, 1974: Let contracts for necessary boiler modifications, if applicable.

(v) October 31, 1974: Initiate onsite modifications, if applicable.

(vi) June 1, 1975: Complete onsite modifications, if applicable.

(vii) July 1, 1975: Achieve compliance with the requirements of Chapter 1200–3–14 of the Rules and Regulations of Tennessee and certify compliance to the Administrator.

(viii) If a performance test is necessary for a determination as to whether compliance has been achieved, such a test must be completed on or before July 1, 1975. Ten days prior to such a test, notice must be given to the Administrator to afford him the opportunity to have an observer present.

(ix) Five days after the deadline for completing increments (a)(2) (ii) through (vi) in this section certification as to whether the increments were met shall be made to the Administrator.

(3) Any owner or operator of a stationary source subject to paragraph (a)(1) of this section who elects to utilize stack gas desulfurization shall be subject to the following compliance schedule:

(i) January 31, 1974—Submit to the Administrator a final control plan, which describes at a minimum the steps which will be taken by the source to achieve compliance with the applicable regulations.

(ii) February 28, 1974—Negotiate and sign all necessary contracts for emission-control systems or process modification, or issue orders for the purchase of component parts to accomplish emission control or process modification.

(iii) May 1, 1974—Initiate onsite construction or installation of emission-control equipment or process modification.

(iv) May 1, 1975—Complete onsite construction or installation of emission control equipment or process modification.

(v) July 1, 1975—Achieve compliance with the requirements of Chapter 1200–3–14 of the Rules and Regulations of Tennessee and certify compliance to the Administrator.

(vi) If a performance test is necessary for a determination as to whether compliance has been achieved, such a test must be completed on or before July 1, 1975. Ten days prior to such a test, notice must be given to the Administrator to afford him the opportunity to have an observer present.

(vii) Five days after the deadline for completing increments (a)(3) (ii) through (iv) in this section, certification as to whether the increments were met shall be made to the Administrator.

(4) Except as provided in paragraph (a)(5) of this section, the owner or operator of any stationary source subject to the requirements of Chapter 1200–3–14 of the Rules and Regulations of Tennessee as contained in the Tennessee implementation plan, shall comply with the following compliance schedule:

(i) November 15, 1973: Submit to the Administrator a final control plan, which describes at a minimum the steps which will be taken by the source to achieve compliance with the applicable regulations.

(ii) January 1, 1974: Negotiate and sign all necessary contracts for emission control systems or process modifications, or issue orders for the purchase of component parts to accomplish emission control or process modification.

(iii) February 1, 1974: Initiate onsite construction or installation of emission control equipment or process modification.

(iv) May 1, 1975: Complete onsite construction or installation of emission control equipment or process modification.

(v) July 1, 1975: Achieve compliance with the applicable regulations and certify such compliance to the Administrator.

(vi) If a performance test is necessary for a determination as to whether compliance has been achieved, such a test must be completed on or before July 1, 1975. Ten days prior to such a test, notice must be given to the Administrator to afford him the opportunity to have an observer present.

(vii) Five days after the deadline for completing increments (a)(4)(ii) through (iv) in this section certification as to whether the increments were met shall be made to the Administrator.

(5) (i) None of the above paragraphs shall apply to a source which is presently in compliance with applicable regulations and which has certified such compliance to the Administrator by October 1, 1973. The Administrator may request whatever supporting information he considers necessary for proper certification.

(ii) Any compliance schedule adopted by the State and approved by the Administrator shall satisfy the requirements of this paragraph for the affected source.

(iii) Any owner or operator subject to a compliance schedule in this paragraph may submit to the Administrator no later than October 1, 1973, a proposed alternative compliance schedule. No such compliance schedule may provide for final compliance after the final compliance date in the applicable compliance schedule of this paragraph. If promulgated by the Administrator, such schedule shall satisfy the requirements of this paragraph for the affected source.

(6) The compliance schedules in paragraphs (a)(2) and (3) of this section shall not excuse a source from complying with any interim emission limitations on the date prescribed in the Tennessee air pollution control regulation listed in paragraph (a)(1) of this section.

(7) Nothing in this paragraph shall preclude the Administrator from promulgating a separate schedule for any source to which the application of the compliance schedules in the above paragraphs of this paragraph fail to satisfy the requirements of §§51.261 and 51.262(a) of this chapter.

(b) The requirements of § 51.262(a) of this chapter are not met since compliance schedules with adequate increments of progress have not been submitted for every source for which they are required.

(c) [Reserved]

(d) The compliance schedules for the sources identified below are disapproved as not meeting the requirements of Subpart N of this chapter. All regulations cited are air pollution control regulations of the State or those of a local air pollution control agency as noted.

(1) State compliance schedules:

Source	Location	State regulation involved	Date of adoption
Burlington Industries, Inc. (State order No. 7–0073)	Washington County, Tenn	Ch. 6, sec. 4	Mar. 20, 1973.
Monsanto Co., kilns Nos. 1 and 2 (State order No. 8–0073).	Maury County, Tenn	Ch. 7, sec. 8	Do.
Monsanto Co., kiln No. 3 (State order No. 20–0073).	.....do	Ch. 7, sec. 8	Do.
Stauffer Chemical Co	.....do	Ch. 7, sec. 8	Do.
Tennessee Eastman Co.:			
(a) Bldg. 267: Chem. A, vent 1–A (State order No. 15–0073).	Sullivan County, Tenn	Ch. 7, sec. 8	Do.
(b) Bldg. 267: Chem. B, vent 1–A (State order No. 25–0073).	.....do	Ch. 7, sec. 8	Do.
(c) Bldg. 267: Chem. C, vent 1–A (State order No. 26–0073).	.....do	Ch. 7, sec. 8	Do.
(d) Bldg. 267: Chem. D, vent 1–A (State order No. 17–0073).	.....do	Ch. 7, sec. 8	Do.
(e) Bldg. 267: Chem. E, vent 1–A, (State order No. 16–0073).	.....do	Ch. 7, sec. 8	Do.

Source	Location	State regulation involved	Date of adoption
(f) B3A–1 (State order No. 18–0073)	.....do	Ch. 7, sec. 8	Do.
(g) B13–1 (State order No. 19–0073)	.....do	Ch. 7, sec. 8	Do.
(h) B13–3 (State order No. 24–0073)	.....do	Ch. 7, sec. 8	Do.

(e) Federal compliance schedules—Local programs. (1) Except as provided in paragraph (e)(16) of this section, the owner or operator of any stationary source subject to the following emission limiting regulations of the Knox County Air Pollution Control Regulations and the City of Memphis Air Pollution Control Code and Shelby County Air Pollution Control Code contained as part of the Tennessee implementation plan shall comply with the compliance schedule in paragraph (e)(2) of this section: Knox County Air Pollution Control Regulations, Sections 18.2C; 19.4B; 20.1D; and 23.1; City of Memphis Air Pollution Control Code and Shelby County Air Pollution Control Code Section 3–24(d).

(2) *Compliance schedule.* (i) October 1, 1973—Submit to the Administrator a final control plan, which describes at a minimum the steps which will be taken by the source to achieve compliance with the applicable regulations.

(ii) December 1, 1973—Negotiate and sign all necessary contracts for emission control systems or process modifications, or issue orders for the purchase of component parts to accomplish emission control or process modification.

(iii) January 1, 1974—Initiate onsite construction or installation of emission control equipment or process modification.

(iv) May 1, 1975—Complete onsite construction or installation of emission control equipment or process modification.

(v) July 1, 1975—Achieve compliance with the applicable regulations and certify such compliance to the Administrator.

(3) Except as provided in paragraph (e)(16) of this section, the owner or operator of any stationary source subject to the following emission limiting regulation of the Knox County Air Pollution Control Regulations contained as part of the Tennessee implementation plan shall comply with the compliance schedule in paragraph (e)(4) of this section: Knox County Air Pollution Control Regulations, Section 19.2C.

(4) *Compliance schedule.* (i) October 1, 1973—Submit to the Administrator a final control plan, which describes at a minimum the steps which will be taken by the source to achieve compliance with the applicable regulations.

(ii) December 1, 1973—Negotiate and sign all necessary contracts for emission control systems or process modifications, or issue orders for the purchase of component parts to accomplish emission control or process modification.

(iii) January 1, 1974—Initiate onsite construction or installation of emission control equipment or process modification.

(iv) May 1, 1975–Complete onsite construction or installation of emission control equipment or process modification.

(v) June 1, 1975—Achieve compliance with the applicable regulations and certify such compliance to the Administrator.

(5) Except as provided in paragraph (e)(16) of this section, the owner or operator of any boiler or furnace of more than 250 million Btu per hour heat input subject to the requirements of Knox County Air Pollution Control Regulations, section 18.4B; and City of Memphis Air Pollution Control Code and Shelby County Air Pollution Control Code, Section 3–24(b), contained as part of the Tennessee implementation plan shall notify the Administrator no later than October 1, 1973, of his intent to utilize either low-sulfur fuel or stack gas desulfurization to meet these requirements.

(6) Any owner or operator of a stationary source subject to paragraph (e)(5) of this section who elects to utilize low-sulfur fuel shall be subject to the following compliance schedule:

(i) November 1, 1973—Submit to the Administrator a projection of the amount of fuel, by types, that will be

substantially adequate to enable compliance with the applicable regulation on July 1, 1975, and for at least one year thereafter.

(ii) December 31, 1973—Sign contracts with fuel suppliers for fuel requirements as projected above.

(iii) January 31, 1974—Submit a statement as to whether boiler modifications will be required. If modifications will be required, submit plans for such modifications.

(iv) March 15, 1974—Let contracts for necessary boiler modifications, if applicable.

(v) June 15, 1974—Initiate onsite modifications, if applicable.

(vi) March 31, 1975—Complete onsite modifications, if applicable.

(vii) July 1, 1975—Achieve compliance with the requirements of Knox County Air Pollution Control Regulations, section 18.4B and City of Memphis Air Pollution Control Code and Shelby County Air Pollution Control Code Section 3–24 (b) and certify such compliance to the Administrator.

(7) Any owner or operator of a stationary source subject to paragraph (e)(5) of this section who elects to utilize stack gas desulfurization shall be subject to the following compliance schedule:

(i) November 1, 1973—Submit to the Administrator a final control plan, which describes at a minimum the steps which will be taken by the source to achieve compliance with the applicable regulation.

(ii) January 1, 1974—Negotiate and sign all necessary contracts for emission control systems or process modification, or issue orders for the purchase of component parts to accomplish emission control or process modification.

(iii) February 1, 1974—Initiate onsite construction or installation of emission control equipment or process modification.

(iv) May 1, 1975—Complete onsite construction or installation of emission control equipment or process modification.

(v) July 1, 1975—Achieve compliance with the applicable regulation and certify such compliance to the Administrator.

(8) Except as provided in paragraph (e)(16) of this section, the owner or operator of any stationary source subject to the following emission limiting regulation of the Hamilton County Air Pollution Control Regulations contained as part of the Tennessee implementation plan shall comply with the compliance schedule in paragraph (e)(9) of this section: Hamilton County Air Pollution Control Regulations, rule 10 (particulate emissions from process operations).

(9) *Compliance schedule.* (i) September 15, 1973—Submit to the Administrator a final control plan, which describes at a minimum the steps which will be taken by the source to achieve compliance with the applicable regulations.

(ii) November 1, 1973—Negotiate and sign all necessary contracts for emission control systems or process modifications, or issue orders for the purchase of component parts to accomplish emission control or process modification.

(iii) December 1, 1973—Initiate onsite construction or installation of emission control equipment or process modifications.

(iv) June 1, 1974—Complete onsite construction or installation of emission control equipment or process modification.

(v) July 1, 1974—Achieve compliance with the applicable regulations, and certify such compliance to the Administrator.

(10) Except as provided in paragraph (e)(16) of this section, the owner or operator of any process (non-fuel burning) source of sulfur dioxide subject to the emission limiting requirements of the Hamilton County Air Pollution Control Regulations, rule 13, contained as part of the Tennessee implementation plan shall comply with the compliance schedule in paragraph (e)(9) of this section.

(11) Except as provided in paragraph (e)(16) of this section, the owner or operator of any boiler or furnace of more than 250 million Btu per hour heat input subject to the sulfur dioxide emission limiting requirements of the Hamilton County Air Pollution Control Regulations, rule 13, contained as part of the Tennessee implementation plan shall notify the Administrator, no

later than October 1, 1973, of his intent to utilize either low-sulfur fuel or stack gas desulfurization to meet these requirements.

(12) Any owner or operator of a fuel burning facility subject to paragraph (e)(11) of this section who elects to utilize low-sulfur fuel shall be subject to the following compliance schedule:

(i) November 1, 1973—Submit to the Administrator a projection of the amount of fuel, by types, that will be substantially adequate to enable compliance with the applicable regulation on July 1, 1974, and for at least one year thereafter.

(ii) December 1, 1973—Sign contracts with fuel suppliers for fuel requirements as projected above.

(iii) January 1, 1974—Submit a statement as to whether boiler modifications will be required. If modifications will be required, submit plans for such modifications.

(iv) February 1, 1974—Let contracts for necessary boiler modifications, if applicable.

(v) February 15, 1974—Initiate onsite modifications, if applicable.

(vi) June 15, 1974—Complete onsite modifications, if applicable.

(vii) July 1, 1974—Achieve compliance with the requirements of Hamilton County Air Pollution Control Regulations, rule 13, and certify such compliance to the Administrator.

(13) Any owner or operator of a fuel burning facility subject to paragraph (e)(11) of this section who elects to utilize stack gas desulfurization shall be subject to the following compliance schedule:

(i) November 1, 1973—Submit to the Administrator a final control plan, which describes at a minimum the steps which will be taken by the source to achieve compliance with the applicable regulations.

(ii) December 1, 1973—Negotiate and sign all necessary contracts for emission control systems or process modifications, or issue orders for the purchase of component parts to accomplish emission control or process modification.

(iii) December 15, 1973—Initiate onsite construction or installation of emission control equipment or process modification.

(iv) June 15, 1974—Complete onsite construction or installation of emission control equipment or process modification.

(v) July 1, 1974—Achieve compliance with the applicable regulations, and certify such compliance to the Administrator.

(14) If a performance test is necessary for a determination as to whether compliance has been achieved, such a test must be completed by the final compliance date in the applicable regulation. Ten days prior to such a test, notice must be given to the Administrator to afford him the opportunity to have an observer present.

(15) Any owner or operator subject to a compliance schedule above shall certify to the Administrator, within five days after the deadline for each increment of progress in that schedule, whether or not the increment has been met.

(16)(i) None of the above paragraphs shall apply to a source which is presently in compliance with applicable regulations and which has certified such compliance to the Administrator by October 1, 1973. The Administrator may request whatever supporting information he considers necessary for proper certification.

(ii) Any compliance schedule adopted by the State and approved by the Administrator shall satisfy the requirements of this paragraph for the affected source.

(iii) Any owner or operator subject to a compliance schedule in this paragraph may submit to the Administrator no later than October 1, 1973, a proposed alternative compliance schedule. No such compliance schedule may provide for final compliance after the final compliance date in the applicable compliance schedule of this paragraph. If promulgated by the Administrator, such schedule shall satisfy the requirements of this paragraph for the affected source.

(17) No compliance schedule in this paragraph shall excuse a source from complying with an interim emission limitation that is applicable to such source.

(18) Nothing in this paragraph shall preclude the Administrator from promulgating a separate schedule for any

source to which the application of a compliance schedule in this paragraph fails to satisfy the requirements of §§ 51.261 and 51.262(a) of this chapter.

(f) The compliance schedules for the sources identified below are approved as meeting the requirements of Subpart N and § 51.6 of this chapter. All regulations cited are air pollution control regulations of the State or those of a local air pollution control agency as noted.

(1) Statewide compliance schedules:

TENNESSEE

Source	Location	Regulation involved	Date of adoption	Effective date	Final compliance date
Aluminum Co. of America, State order No. 79–00073.	Alcoa	CH.V–2(b), CH. VII–2.	Oct. 9, 1973	Immediately	Aug. 9, 1974.
American Enka, State order No. 64–00073:					
(a) Boilers 1, 2, 3	Morristown	CH. V–2(b), CH.VI–2(a).	do	do	July 1, 1975.
(b) Boilers 4, 5, 6	do	CH. VI–2(b), CH. VI–2(a).	do	do	Dec. 30, 1974.
(c) Boiler 9	do	CH. V–2(b), CH. VI–2(a).	do	do	June 30, 1974.
Athens Plow Co., State order No. 4–00073.	Athens	CH. V–2(b), CH. VII–9(b).	Mar. 20, 1973	do	Aug. 9, 1974.
Athens Stove Works, State order No. 55–0073.	do	CH. V–2(b), CH. VII–9(b).	June 19, 1973	do	July 2, 1974.
Beaunit Fibers, State order No. 56–0073:					
(a) Stacks 1 and 2	Elizabethton	CH. V–2(a)	do	do	Mar. 30, 1975.
(b) Stack 3	do	CH. VI–2(a), CH. V–2(a).	do	do	Nov. 30, 1974.
Bedford Lumber Co.:					
State order No. 87–00073	Shelbyville	CH. V–2(b), CH. VI–2(a)(2).	Oct. 9, 1973	do	Mar. 1, 1974.
State order No. 88–00073	do	CH. V–2(b), CH. VI–2(a)(2).	do	do	Oct. 9, 1974.
Bristol Foundry & Machine Co., State order No. 71–00073.	Bristol	CH. V–2(b), CH. VII–9(b).	do	do	Nov. 9, 1973.
Bruce Flooring State order No. 72–00073.	Jackson	CH. V–2(b), CH. VII–2.	do	do	Aug. 9, 1974.
Burroughs-Ross-Colville Co.:					
State order No. 65–00073: (a) Boiler 1.	McMinnville	CH. V–2(b), CH. VI–2(a)2.	do	do	Do.
State order No. 66–00073:					
(a) Collectors C–1, C–3	do	CH. V–2(b), CH. VII–2(a).	do	do	Do.
(b) Collector C–7	do	CH. V–2(b), CH. VII–2(a).	do	do	Oct. 1, 1973.
Celotex Corp., State Order No. 61–0073:					
(a) Collectors A–1–2, B–3, B–4, and E–22.	Paris	CH. V–2(b), CH. VII–2(a).	June 19, 1973	do	May 1, 1974.
(b) Collectors D–12, D–13, and D–14.	do	CH. V–2(b), CH. VII–2(a).	do	do	Apr. 1, 1974.
(c) Collectors C–0, C–10, and C–11.	do	CH. V–2(b), CH. VII–2(a).	do	do	Oct. 30, 1973.
Clarksville Foundry & Machine Works State order No. 73–00073.	Clarksville	CH. V–2(b), CH. VII–9(b).	Oct. 9, 1973	do	Jan. 30, 1974.
Dover Corp., State order No. 74–00073.	Middleton	CH.V–2(b), CH. VI–2(d).	do	do	July 9, 1974.
Farrar Construction, State order No. 75–00073.	McMinnville	CH. V–2(b), CH. VII–9(g).	do	do	Oct. 9, 1973.
Harris Manufacturing Co., State order No. 62–0073.	Johnson City	CH.V–2(b), CH. VII–2(a).	June 19, 1973	do	June 1, 1974.
Holston Army Ammunition Plant, State order No. 67–00073.	Kingsport	CH.V–2(b), CH. VI–2(a).	Oct. 9, 1973	do	July 1, 1975.
Kingsport Foundry & Manufacturing Corp., State order No. 57–0073.	do	CH.V–2(b), CH. VII–9(b).	June 19, 1973	do	Feb. 28, 1974.
Koh-i-noor Radiograph, Inc., State order No. 58–0073.	Lewisburg	CH.V–2(b), CH. VII–2(a).	do	do	Mar. 29, 1974.
Lenoir Car Works, State order No. 76–00073.	Lenoir City	CH. V–2(b), CH. VII–2.	Oct. 9, 1973	do	Dec. 9, 1973.
Marquette Cement Manufacturing Co., State order No. 5–0073.	Cowan	CH. V–2(b), CH. VII–2.	Mar. 20, 1973	do	Aug. 9, 1974.
Mead Corp., State order No. 59–0073.	Kingsport	CH. V–2(b), CH. VI–2(a)(1).	June 19, 1973	do	July 1, 1975.

TENNESSEE—Continued

Source	Location	Regulation involved	Date of adoption	Effective date	Final compliance date
Monsanto Co., State order No. 6–0073:					
(a) Source 4	Columbia	CH. V–2, CH. VII–2.	Mar. 20, 1973	do	Mar. 9, 1974.
(b) Source 5	do	CH. V–2, CH. VII–2.	do	do	Dec. 9, 1973.
Royal Oak Charcoal Co.:					
State order No. 77–00073	Jamestown	CH.V–2(b), CH. VII–2.	Oct. 9, 1973	do	July 31, 1974.
State order No. 78–00073	do	CH. V–2(b), CH.VII–2.	do	do	Mar. 1, 1974.
Stokely-Van Camp, Inc., State order No. 63–0073.	Tellico Plains	CH.V–2(b), CH. VI–2(a)(2).	June 19, 1973	do	Jan. 30, 1974.
Tennessee Asphalt Co., State order No. 79–00073.	LaFollette	CH.V–2(b), CH. VII–9(g).	Oct. 9, 1973	do	Dec. 30, 1973.
Tennessee Eastman Co.:					
State order No. 80–00073	Kingsport	CH. V–2(b), CH. VII–2.	do	do	June 1, 1974.
State order No. 81–00073	do	CH. V–2(b), CH. VII–2.	do	do	Aug. 9, 1974.
State order No. 82–00073	do	CH.V–2(b), CH. VII–2.	do	do	Nov. 1, 1974.
State order No. 83–00073	do	CH. V–2(b), CH. VII–2.	do	do	July 1, 1975.
State order No. 84–00073:					
(a) Units 18–22	do	CH. V–2(b), CH.VI–2(a)(1).	do	do	Mar. 1, 1974.
(b) Units 11–17	do	CH. VI–2(b), CH. VI–2(a)(1).	do	do	June 1, 1975.
Tennessee Forging Steel Co., State order No. 85–00073.	Harriman	CH. V–2(b), CH. VII–2.	do	do	Oct. 30, 1973.
Tennessee Metallurgical, State order No. 89–00073:					
(a) Furnace No. 2	Kimball	CH.V–2(b), CH. VII–2.	do	do	Mar. 1, 1974.
(b) Furnace No. 1	do	CH. V–2(b), CH. VII–2.	do	do	Jan. 15, 1974.
Union Carbide Corp., State order No. 86–00073.	Columbia	CH. V–2(b), CH. VII–2.	do	do	Aug. 9, 1974.
United States Stove Co., State order No. 3–0073.	South Pittsburg	CH.V–2(b)	Mar. 20, 1973	do	Feb. 9, 1974.
Aluminum Co. of America, sources 22 and 23 (carbon anode baking).	Alcoa	Ch. V, sec. II.B	Nov. 28, 1973	do	July 9, 1974.
Berkline Corp., plant No. 1, collector No. 6.	Morristown	Ch. V. sec. II. B; ch. VII, sec. II.	do	do	June 9, 1974.
E. I. du Pont: 4 steam boilers, particulate emissions, SO_2 emissions.	New Johnsonville.	Ch. V, sec. II. B; ch. V, sec. II.A(2).	Feb. 6, 1974	do	June 30, 1975.
Industrial Products Co., Inc.: Control equipment.	Mt. Pleasant	Ch. V, sec. II.B; ch. VII, sec. II.	Nov. 28, 1973	do	Jan. 1, 1974.
Interstate Foundry & Machine Co.: Cupola.	Johnson City	Ch. V, sec. II. B; ch. VII, sec. IX.B.	do	do	Feb. 9, 1974.
Laminite Plastics Corp.: Moldow system (phase I only).	Morristown	Ch. V, sec. II. B; ch. VII, sec. II.	do	do	Apr. 30, 1974.
Lea Industries:					
Plant No. 4; process emissions	do	do	do	do	Jan. 1, 1974.
Plant No. 5; process emissions	do	do	do	do	Aug. 9, 1974.
Plant No. 6; process emissions	do	do	do	do	Do.
Plant No. 6, boiler	do	Ch. V	do	do	Feb. 1, 1974.
Lewisburg Casting Co., Inc.: Cupola	Lewisburg	do	Nov. 28, 1979	do	June 9, 1974.
A. B. Long Quarries, Inc.: Limestone quarry and crusher.	Harriman	Ch. V, sec. II.B; ch. VII, sec. II: ch. VIII.	do	do	Mar. 30, 1974.
Monsanto Industrial Chemical Co	Columbia	Ch. VII	Feb. 6, 1973	do	July 1, 1975.

TENNESSEE—Continued

Source	Location	Regulation involved	Date of adoption	Effective date	Final compliance date
Plough, Inc.: Boiler	Shelbyville	Ch. V, sec. II. B; ch. VI, sec. II.A(2).	do	do	May 30, 1974.
Powermatic-Houdaille, Inc.: Two No. 5 cupolas.	McMinnville	Ch. V, sec. II.B; ch. VII, sec. II.	do	do	Aug. 9, 1974.
Royal Oak Charcoal Co.: Kilns 1, 2, 3, 4, 5.	Cookeville	do	do	do	Do.
Don P. Smith Chair Co.: Drying kiln	Loudin	do	do	do	June 30, 1974.
Temple Industries: Conical burner	Savannah	Ch. V, sec. II. B; ch. VI, sec. II.D.	do	do	Apr. 30, 1974.
Tennlite, Inc.: Two rotary kilns	Green Brier	Ch. V, sec. II.B; ch. VII, sec. II.	do	do	July 30, 1974.
Tenn. Asphalt Co. & Road Builders, Inc.: Asphalt batching plant.	Cumberland City.	Ch. V, sec. II.B; ch. VII, secs. II and IX, G; ch. VIII.	do	do	Dec. 17, 1974.
Vulcan Materials Co.: Rock quarry	Emory Gap	Ch. V, sec. II.B; ch. VII, sec. II; ch. VIII.	do	do	Mar. 31, 1974.
Do	Savannah	Ch. V, sec. II.B; ch. VII, sec. II; ch. VIII.	do	do	June 21, 1974.
Do	Parsons	Ch. V, sec. II.B; ch. VII, sec. II; ch. VIII.	do	do	Feb. 18, 1974.
Cities Service (41–0073)	Copperhill	Ch. VII, sec. 8	June 19, 1973	do	July 1, 1975.
Cities Service (42–0073)	do	Ch. VII, sec. 8	do	do	Do.
Penn Dixie Cement	Kingsport	Ch. VII, sec. 2	Oct. 9, 1973	do	Do.

(2) Chattanooga-Hamilton County compliance schedules:

TENNESSEE

Source	Location	Regulation involved	Date of adoption	Effective date	Final compliance date
Chattanooga Public Schools:					
(a) Elbert Long School	Chattanooga	Sec. 9(8)	Feb. 8, 1973	Immediately	July 1, 1974.
(b) Charles A. Bell School	do	Sec. 9(8)	do	do	Do.
(c) G. Russel Brown School	do	Sec. 9(8)	do	do	Do.
(d) Calvin Donaldwon School	do	Sec. 9(8)	do	do	Do.
(e) East Chattanooga School	do	Sec. 9(8)	do	do	Do.
(f) Highland Park School	do	Sec. 9(8)	do	do	Do.
(g) Normal Park School	do	Sec. 9(8)	do	do	Do.
(h) Piney Woods School	do	Sec. 9(8)	do	do	Do.
(i) Ridgedale School	do	Sec. 9(8)	do	do	Do.
(j) Frank H. Trotter School	do	Sec. 9(8)	do	do	Do.
(k) Woodmore School	do	Sec. 9(8)	do	do	Do.
(l) Rivermont School	do	Sec. 9(8)	do	do	Do.
(m) St. Elmo School	do	Sec. 9(8)	do	do	Do.
E.I. du Pont de Nemours & Co.:					
(a) Nylon 66 evaporator Nos. 1–5.	do	Sec. 9	do	do	Do.
(b) Nylon auto clave Nos. 1–17	do	Sec. 9	do	do	Do.
(c) Continuous polymerization lines I–III.	do	Sec. 9	do	do	Do.
(d) Continuous polymerization line IV.	do	Sec. 9	do	do	Sept. 1, 1973.
(e) Lindburg furnace type 364830–E12–S.	do	Sec. 9	do	do	Aug. 1, 1973.
(f) Lindburg furnace type 243624–E12–S.	do	Sec. 9	do	do	Feb. 1, 1974.
(g) Trent furnace model 862640A.	do	Sec. 9	do	do	Mar. 1, 1974.
(h) Lindburg furnace type 364830–E12–S.	do	Sec. 9	do	do	Apr. 1, 1974.
(i) Riley boiler	do	Sec. 9	do	do	July 1, 1974.
(j) B & W boiler	do	Sec. 9	do	do	Do.
General Tire Service	do	Sec. 9	do	do	Jan. 31, 1974.
Randolph Manufacturing Co., Inc	do	Sec. 9	do	do	Do.
Southern Foundry Supply, Inc	do	Sec. 9	do	do	Mar. 31, 1973.
Tennessee Awning & Tent Co	do	Sec. 9	Feb. 9, 1973	do	June 1, 1973.
United States Pipe & Foundry Co	do	Sec. 9	Feb. 8, 1973	do	Nov. 1, 1973.

(3) Memphis-Shelby County compliance schedules:

TENNESSEE

Source	Location	Regulation involved	Date of adoption	Effective date	Final compliance date
Desoto Hardwood Flooring Co.: Phase 1.	Chattanooga	Sec. 9	Apr. 5, 1973	Immediately	May 1, 1974.
Wabash, Inc.: Phase 1	do	Secs. 3–17, 3–20.	do	do	Apr. 1, 1974.

(4) Nashville-Davidson County compliance schedules:

TENNESSEE

Source	Location	Regulation involved	Date of adoption	Effective date	Final compliance date
Bruce Flooring	Nashville	Sec. 4–1–9	Feb. 7, 1973	Immediately	Dec. 31, 1973.

[38 FR 16169, June 20, 1973, as amended at 38 FR 22748, Aug. 23, 1973; 38 FR 24341, 24342, Sept. 7, 1973; 40 FR 3445, Jan. 22, 1975; 40 FR 3570, Jan. 23, 1975; 42 FR 10995, Feb. 25, 1977; 51 FR 40676, 40677, Nov. 7, 1986; 52 FR 24367, June 30, 1987; 54 FR 25258, June 14, 1989]

§ 52.2224 Legal authority.

(a) The requirements of § 51.230(c) of this chapter are not met since the plan does not provide the legal authority for controlling motor vehicles during air pollution emergency episodes.

(b) The requirements of § 51.230(d) of this chapter are not met since statutory authority to prevent construction, modification, or operation of a facility, building, structure, or installation, or combination thereof, which indirectly results or may result in emissions of any air pollutant at any location which will prevent the maintenance of a national air quality standard is not adequate.

(c)(1) The requirements of § 51.230(b) of this chapter are not met since the definition of *person* set forth in the Tennessee Air Quality Act and in the State implementation plan does not include facilities owned or operated by the State. Therefore, section 53–3409(f) of the Tennessee Code Annotated and section 30 of Chapter II of the Tennessee Air Pollution Control Regulations are disapproved.

(2) Definition of *person*. For the purposes of the plan, *person* shall mean any individual, partnership, copartnership, firm, company, corporation, association, joint stock company, trust, estate, State-owned or operated facility, State agency, political subdivision, or any other legal entity, or their legal representatives, agents, or assigns.

(d) The requirements of § 51.230(b) of this chapter are not met since the State lacks legal authority, as a result of the enactment of House Bill 1490 by the 1974 Tennessee legislature, to control emissions from the quarrying and processing of agricultural limestone. Therefore, section 53–3424 of the Tennessee Code Annotated is disapproved.

(e) The requirements of § 51.230(b) of this chapter are not met since the State lacks legal authority, as a result of the enactment of House Bill 1845 by the 1974 Tennessee legislature, to control emissions from air contaminant sources which use woodwaste only as fuel. Therefore, the last sentence of section 53–3422 of the Tennessee Code Annotated is disapproved.

[37 FR 10894, May 31, 1972]

EDITORIAL NOTE: For FEDERAL REGISTER citations affecting § 52.2224, see the List of CFR Sections Affected in the Finding Aids section of this volume.

§ 52.2225 VOC rule deficiency correction.

(a) Revisions to sections 7–3, 7–13, and 7–24 of the Tennessee regulations are approved. These amendments are in response to the Clean Air Act section 182(a)(2)(A) requirement to submit RACT rules correcting deficiencies in the existing SIP in accordance with EPA's pre-amendment guidance. These deficiencies were first noted in a letter from Greer Tidwell, the EPA Region IV

Administrator, to Governor McWherter on May 26, 1988, and clarified in a letter dated June 10, 1988, from Winston Smith, EPA Region IV Air Division Director, to Paul Bontrager, Director of the Air Pollution Control Division of the Metropolitan Health Department for Nashville/Davidson County, and were further identified in EPA guidance including the Blue Book and the proposed Post–87 policy. The following deficiency in the Tennessee Regulations, however, has not been corrected.

(1) Section 7–25, ''Recordkeeping and Reporting Requirements'' Nashville/Davidson County committed in a letter dated May 7, 1991, to include a separate provision that requires records to be maintained for at least two years. This additional provision, which is scheduled for a July 15, 1992, public hearing, will be submitted to EPA shortly after that date and will be acted upon separately.

(2) In Section 7–3, Petition for Alternative Controls, the words ''as applied'' should be added to the term ''VOC/gallon solids'' as a clarification.

(3) The term ''vapor-tight'' should be defined in section 7–13.

(4) ''Once-in/always-in'' is missing from the applicability section of the individual rules.

(5) Section 7–25, ''Recordkeeping and Reporting Requirements'' should be revised to include additional requirements that would contain: units of compliance consistent with the performance requirements; applicable time periods for data entries; and a clear, separate provision that requires records to be kept.

(b) Revisions to chapter 1200–3–18 ''Volatile Organic Compounds'' were submitted by Tennessee on May 18, 1993, to meet the requirements added by the 1990 Clean Air Act Amendments (CAAA) commonly referred to as the ''VOC RACT Catch-up '' requirements. The following deficiencies remain in Tennessee chapter 1200–3–18 and must be corrected.

(1) Rule 1200–3–18–.01 (1): The definition of ''volatile organic compound'' must be revised to delete perchloroethylene from the list of compounds that have negligible photochemical reactivity.

(2) Rule 1200–3–18–.02 (8): Tennessee must revise this paragraph to provide that an official of the company certify the reports instead of the owner or operator. This paragraph must also be amended to require NO_X emissions to be reported.

(3) Rule 1200–3–18–.06 (1): The term ''minimum reasonably attainable'' must be explained or defined.

(4) Rule 1200–3–18–.33: This rule for the manufacture of synthesized pharmaceutical products has been amended by the State since the official submittal. The State of Tennessee has committed to submit the revised rule to EPA by January 1, 1996.

(5) Rule 1200–3–18–.38: This rule for leaks from synthetic organic chemical, polymer, and resin manufacturing equipment sets the level of concentration of pure component at 20%. This level must be changed to 10%.

(6) Rules 1200–3–18–.39 (5)(a)(2) and 1200–3–18–.86 (11)(c): The conversion factors must be corrected.

(c) The above deficiencies must be corrected according to the letters mentioned above, the proposed post-1987 ozone policy (52 FR 45044), and other EPA guidance relating to the deficiencies before the SIP for ozone can be fully approved.

[56 FR 10173, Mar. 11, 1991, as amended at 57 FR 28626, June 26, 1992; 59 FR 18317, Apr. 18, 1994; 60 FR 10508, Feb. 27, 1995]

§ 52.2226 Extensions.

The Administrator hereby extends for 18 months (until July 1, 1980) the statutory deadline for submittal of a plan to attain the secondary SO_2 standard in Copperhill.

(a) [Reserved]

(b) The Administrator hereby extends for 18 months (until July 1, 1980) the statutory timetable for submittal of Tennessee's plans to attain and maintain the secondary ambient standard for particulate matter in the Chattanooga, Columbia, Kingsport, Memphis, and Nashville nonattainment areas (40 CFR 81.343).

[45 FR 2034, Jan. 10, 1980, as amended at 45 FR 8008, Feb. 6, 1980]

§ 52.2227 Prevention of air pollution emergency episodes.

(a) The requirements of § 51.152(a) of this chapter are not met since the plan does not provide for the enforcement of emission control actions for mobile sources during air pollution emergency episodes.

[37 FR 10895, May 31, 1972, as amended at 51 FR 40677, Nov. 7, 1986]

§ 52.2228 Review of new sources and modifications.

(a) *Part D—Conditional approval.* The Nashville-Davidson County regulation for the review of new sources and modifications in nonattainment areas is approved on condition that the State by October 31, 1984, submit a revision limiting source shutdown credit for offsets to replacement units, and, in the interim, assure implementation of the regulation in conformity with Federal requirements.

(b) *Section 123—Conditional approval.* The plan's provision for implementation of the requirements of section 123 of the Clean Air Act in Nashville-Davidson County is approved on condition that the State by October 31, 1984, submit:

(1) Definitions in the local regulation of *nearby* and *excessive concentration* and

(2) Provision in the local regulation for public notification and opportunity for hearing in cases where stack heights in excess of normal good engineering practice are proposed on the basis of fluid modeling demonstrations, and, in the interim, assure implementation of the local regulation in conformity with Federal requirements.

(c) The State of Tennessee proposed to delete section 1200–3–18–.03 ''Standard for New Sources'' from the Tennessee State Implementation Plan (SIP) and the Memphis-Shelby County portion of the Tennessee SIP. EPA is disapproving the deletion of this rule for the Tennessee SIP because Tennessee does not have federally approved New Source Review (NSR) regulations which apply to some of the sources in this chapter. EPA is approving the deletion of this rule for the Memphis submittal because the federally approved TN NSR applies to the Memphis-Shelby County area.

(d) The State of Tennessee proposed to delete rule 1200–3–18-.03 ''Standard for New Sources'' from the Tennessee State Implementation Plan (SIP). In paragraph (e) of this section, EPA disapproved the deletion of this rule because Tennessee did not have federally approved New Source Review (NSR) regulations that applied to some of the sources in this chapter. EPA is hereby approving the deletion of section 1200–3–18-.03 of the Tennessee SIP, and is deleting EPA's earlier disapproval in paragraph (e) of this section.

[39 FR 7284, Feb. 25, 1974, as amended at 48 FR 50080, Oct. 31, 1983; 50 FR 32413, Aug. 12, 1985; 51 FR 40677, Nov. 7, 1986; 59 FR 18317, Apr. 18, 1994; 60 FR 7917, Feb. 10, 1995; 60 FR 33924, June 29, 1995]

§ 52.2229 Rules and regulations.

(a) The following portions of the revised Memphis and Shelby County regulations submitted on July 7, 1986, are disapproved because they are inconsistent with EPA policy and requirements:

16–77, Rules 1200–3–9–.01(3); 1200–3–9–.01(4)(o)(2)

(b) Knox County Regulation 25.2.B, submitted July 7, 1986, is disapproved because it is inconsistent with EPA policy and requirements.

[54 FR 25458, June 15, 1989, as amended at 54 FR 31954, Aug. 3, 1989]

§ 52.2230 Attainment dates for national standards.

The following table presents the latest dates by which the national standards are to be attained. The dates reflect the information presented in Tennessee's plan.

Air quality control region	Pollutant						
	Particulate matter		Sulfur oxides		Nitrogen dioxide	Carbon monoxide	Ozone
	Primary	Secondary	Primary	Secondary			
Eastern Tennessee-Southwestern Virginia Interstate:							
a. Sullivan County: Bristol and Kingsport nonattainment areas [1]	d	d	c	c	b	b	d
b. Campbell County nonattainment areas [1]	d	d	c	c	b	b	b
c. Anderson/Knox County nonattainment area [1]	c	d	c	c	b	b	b
d. Copperhill nonattainment area [1]	c	c	d	f	b	b	b
e. Knox County nonattainment area [1]	c	c	c	c	b	d	d
f. Bradley County nonattainment area [1]	c	c	c	c	b	b	d
g. Roane County nonattainment area	c	c	c	c	b	b	d
h. Rest of AQCR	c	c	c	c	b	b	b
Tennessee River Valley-Cumberland Mountains Intrastate	c	c	c	c	b	b	b
Middle Tennessee Intrastate:							
a. Benton/Humphreys County nonattainment areas [1]	c	c	d	d	b	b	c
b. Davidson County nonattainment area [1]	d	d	c	c	b	e	d
c. Maury County nonattainment area [1]	c	c	b	b	b	b	d
d. Rest of AQCR	c	c	b	b	b	b	c
Western Tennessee Intrastate:							
a. Benton/Humphreys County nonattainment area [1]	c	c	d	d	b	b	b
b. Rest of AQCR	c	c	b	b	b	b	b
Chattanooga Interstate:							
a. Hamilton County nonattainment area [1]	c	c	b	b	b	b	d
b. Rest of AQCR	c	c	b	b	b	b	b
Metropolitan Memphis:							
a. Shelby County nonattainment area [1]	c	c	b	b	b	e	d
b. Rest of AQCR	c	c	b	b	b	b	c

[1] For more precise delineation, see § 81.343 of this chapter.

a. Air quality levels presently below primary standards or area is unclassifiable.
b. Air quality levels presently below secondary standards or area is unclassifiable.
c. July 1975.
d. December 31, 1982.
e. December 31, 1987.
f. 18-month extension granted.

[45 FR 53818, Aug. 13, 1980, as amended at 45 FR 75661, Nov. 17, 1980; 49 FR 1343, Jan. 11, 1984]

§ 52.2231 Control strategy: Sulfur oxides and particulate matter.

(a) Part D conditional approval. The Chattanooga primary TSP plan's provisions for review of new sources and modifications in the nonattainment area are approved on condition that the State submit by December 31, 1987, a definition of the term *Federally enforceable* and provisions for making Federally enforceable all limitations, conditions, and offsets, including permit restrictions, relied upon under the plan, and in the interim, implement these provisions in a manner consistent with EPA requirements.

(b) In letters dated March 9 and April 15, 1988, the Tennessee Department of Health and Environment certified that no emission limits in the State's plan are based on dispersion techniques not permitted by EPA's stack height rules. This certification does not apply to: Dupont (43–07–02); Tennessee Valley Authority—Johnsonville (43–11–1 thru 10); Tennessee Chemical Company (70–04–21); Tennessee Eastman (82–03–15–19); A.E. Staley (53–81–18, 19, 34, 31); Cargill Inc., Memphis; and Grace Chemical Company, Millington.

[52 FR 15498, Apr. 29, 1987, as amended at 54 FR 25454, June 15, 1989]

§ 52.2232 [Reserved]

§ 52.2233 Significant deterioration of air quality.

(a)(1) Paragraph 1200–3–9–.01(4)–(0)–2. of Tennessee's regulations is disapproved because it does not require that the consent of the Governor(s) of affected states be obtained when innovative technology waivers are granted. EPA retains permitting authority for sources requesting innovative technology waivers which would significantly impact air quality in adjacent states.

(2) Tennessee's definition of *stationary source* specifically excludes *the activities of any Vessel.* This exclusion is not currently approvable and EPA is deferring action on it pending final rulemaking on the issue. EPA retains authority for permits which involve vessel emissions where a source is not willing to include all vessel emissions in the definition of source.

(b) The requirements of 52.21 (b) through (w) are hereby incorporated by reference and made part of the applicable SIP for the State of Tennessee for the following purposes:

(1) Permitting of sources requesting innovative technology waivers which would significantly impact air quality in adjacent states.

(2) Permitting of sources involving vessel emissions where the source is unwilling to include all vessel emissions in the definition of source.

(c) (1) All applications and other information required pursuant to § 52.21 of this part from sources located or to be located in the State of Tennessee shall be submitted to the Division of Air Pollution Control, Tennessee Department of Public Health, 256 Capitol Hill Building, Nashville, Tennessee 37219.

[42 FR 36456, July 15, 1977, and 43 FR 26410, June 19, 1978, as amended at 50 FR 7779, Feb. 26, 1985]

§ 52.2234 Visibility protection.

(a) The requirements of section 169A of the Clean Air Act are not met because the plan does not include approvable procedures meeting the requirements of 40 CFR 51.305 and 51.307 for protection of visibility in mandatory Class I Federal areas.

(b) Regulations for visibility monitoring and new source review. The provisions of §§ 52.26, 52.27, and 52.28 are hereby incorporated and made part of the applicable plan for the State of Tennessee.

(c) *Long-term strategy*. The provisions of § 52.29 are hereby incorporated and made part of the applicable plan for the State of Tennessee.

[51 FR 5505, Feb. 13, 1986, as amended at 52 FR 45137, Nov. 24, 1987]

§ 52.2235 Control strategy: Ozone.

(a) Determination—EPA is determining that, as of August 8, 1995, the Nashville ozone nonattainment area has attained the ozone standard and that the reasonable further progress and attainment demonstration requirements of section 182(b)(1) and related requirements of section 172(c)(9) of the Clean Air Act do not apply to the area for so long as the area does not monitor any violations of the ozone standard. If a violation of the ozone NAAQS is monitored in the Nashville ozone nonattainment area, these determinations shall no longer apply.

(b) Nonregulatory provisions for the implementation of a basic I/M program in Rutherford, Sumner, Williamson, and Wilson Counties, submitted on July 13, 1994, were approved by EPA on September 26, 1995.

[60 FR 40292, Aug. 8, 1995, as amended at 60 FR 47290, Sept. 12, 1995]

§ 52.2236 Control strategy; lead.

The Tennessee Department of Environment and Conservation has submitted revisions to the Tennessee SIP on October 6, 1994. These revisions address the requirements necessary to change an lead nonattainment area to attainment. The maintenance plan for the Fayette County area near Rossville, Tennessee is comprised of a maintenance demonstration and NSR/PSD program. For areas where the only lead source has shut down, these components are sufficient for an approvable maintenance plan. The State's maintenance plan is complete and satisfies all

of the requirements of section 175(A) of the CAA.

[60 FR 43020, Aug. 18, 1995]

Subpart SS—Texas

§ 52.2270 Identification of plan.

(a) Title of plan: ''Texas Air Pollution Control Implementation Plan.''

(b) The plan was officially submitted on January 28, 1972.

(c) The plan revisions listed below were submitted on the dates specified.

(1) Certification that statewide public hearings had been held on the plan was submitted by the Texas Air Control Board (TACB) on February 8, 1972. (Nonregulatory)

(2) A discussion of its policy concerning the confidentiality of certain hydrocarbon emission data was submitted by the TACB on May 2, 1972. (Nonregulatory)

(3) A discussion of the source surveillance and extension sections of the plan was submitted by the TACB on May 3, 1972. (Nonregulatory)

(4) A discussion of minor revisions to the plan was submitted by the Governor on July 31, 1972. (Nonregulatory)

(5) Revisions of section XI, paragraph C.3: Rule 9: Regulation V and control strategy for photochemical oxidants/hydrocarbons in Texas designated regions 7 and 10; regulation VII; and control strategy for nitrogen oxides in regions 5, 7, and 8 were submitted by the TACB on August 8, 1972.

(6) A request that inconsistencies in the plan concerning the attainment dates of primary air standards be corrected was submitted by the Governor on November 10, 1972. (Nonregulatory)

(7) Revisions to regulation IV, regulation V, the general rules and control strategy for photochemical oxidants/hydrocarbons, and a request for a two year extension to meet Federal standards for photochemical oxidants was submitted by the Governor on April 13, 1973.

(8) Revisions to regulation IV (Control of Air Pollution from Motor Vehicles) were adopted on October 30, 1973, and were submitted by the Governor on December 11, 1973.

(9) A revision of priority classifications for particulate matter, sulfur oxides, and carbon monoxide was submitted by the Governor on March 21, 1975. (Nonregulatory)

(10) Revisions to rule 23, concerning compliance with new source performance standards, and rule 24, concerning compliance with national emission standards for hazardous air pollutants were submitted by the Governor on May 9, 1975.

(11) Administrative revisions were submitted by the TACB with the semiannual report in 1974 for sections I, II, III, IV, XI and XIII, and with the semiannual report in 1975 for sections I, II, XI, and XII. (Nonregulatory)

(12) A revision of section IX, Air Quality Surveillance, was submitted by the Governor on August 2, 1976. (Nonregulatory)

(13) Revisions to section IX, Air Quality Surveillance Plan, which include changes of several air quality monitoring sites, were submitted by the TACB on August 12, 1977. (Nonregulatory)

(14) Administrative revisions to section X, the Permit System, were submitted by the TACB in 1973, 1974, 1975, and 1977. (Nonregulatory)

(15) Revisions to regulation V for control of volatile carbon compound emissions, as amended on December 10, 1976, were submitted by the Governor on July 20, 1977.

(16) An administrative revision to section IX, Air Quality Surveillance System, was submitted by the Texas Air Control Board on August 14, 1978. (Nonregulatory)

(17) Board Order No. 78–6, creditable as emission offsets for the Corpus Christi Petrochemical Company project in Corpus Christi, was submitted by the Governor on July 24, 1978, as amendments to the Texas State Implementation Plan (see § 52.2275).

(18) Draft inspection/maintenance legislation and a schedule for conducting a pilot inspection/maintenance study were submitted by the Governor on April 13, 1979.

(19) Adopted inspection/maintenance legislation and administrative revisions concerning inspection/maintenance were submitted by the Governor on August 9, 1979.

(20) Revision to the plan for attainment of standards for particulate matter, carbon monoxide, and ozone (Part

D requirements) were submitted by the Governor on April 13, 1979.

NOTE: The provisions of Rule 104 submitted by the Governor on 1/28/72 and approved by EPA on 5/31/72 remain in effect in other than nonattainment areas.

(21) Administrative revisions to the transportation control portion of the plan were submitted by the Governor on August 9, 1979 (non-regulatory).

(22) No action is being taken on Subchapters 131.07.52, .53, and .54 of Regulation V, submitted by the Governor April 13, 1979 for the ozone nonattainment counties of Harris, Galveston, Brazoria, Bexar, Dallas, and Tarrant.

(23) No action is being taken on the control strategy for the TSP nonattainment area of Houston 1, submitted by the Governor on April 13, 1979.

(24) A revision identifying and committing to implement currently planned Transportation Control Measures (TCMs) for Harris County was submitted by the Governor on December 28, 1979.

(25) Revisions to Regulation VI (i.e., Subchapter 116.3(a)(13–15)), and the definition of ''de minimus impact,'' were adopted by the Texas Air Control Board on July 11, 1980, and submitted by the Governor on July 25, 1980.

(26) Board Order No. 78–8 creditable as emission offsets for the General Portland, Inc., project in New Braunfels, Comal County, Texas, was submitted by the Governor on September 13, 1978, as an amendment to the Texas State Implementation Plan (see § 52.2276).

(27) Revisions to Regulation V (i.e., Subchapters 115.171–176) and particulate matter (TSP) control strategies for the nonattainment areas of San Benito, Brownsville, Corpus Christi 1, Corpus Christi 2, Dallas 1, and El Paso 4 were adopted by the Texas Air Control Board on July 11, 1980, and submitted by the Governor on July 25, 1980.

(28) An administrative revision to section I, Introduction, was submitted by the TACB on July 23, 1981. (Nonregulatory)

(29) An administrative revision to section V, Legal Authority, was submitted by the TACB on July 23, 1981. (Nonregulatory).

(30) Revisions to the Texas SIP for the Union Carbide Corporation Bubble in Texas City, Texas were submitted by the Governor on December 15, 1981.

(31) Revisions to the ozone, total suspended particulate, and carbon monoxide control strategies, General Rules (i.e., definition for vapor mounted seal and section 101.22), Regulation IV (i.e., addition of section 114.2(b)), and Regulation V (i.e., deletion of sections 115.46 and 115.71, 115.101–106, sections 115.144, 115.153, title of sections 115.161–163 and 115.162, 115.171–176, 115.191–194, sections 115.252, 115.262, 115.401, 115.411, and title of sections 115.421–424) were adopted by the Texas Air Control Board on March 20, 1981, and submitted by the Governor on July 20, 1981.

(32) Revisions to the plan for intergovernmental consultation and composition of the Texas Air Control Board were submitted by the Governor on April 13, 1979.

(33) A revision to General Rule 9—Sampling, as adopted by the Texas Air Control Board on October 30, 1973, was submitted by the Governor on December 11, 1973.

(34) Revisions to the General Rules (i.e., the addition of definitions for liquid-mounted seal, miscellaneous metal parts and products, factory surface coating of flat wood paneling, vapor tight, and waxy high pour point crude oil) and Regulation V (i.e., sections 115.101–106, section 115.191 (9) and (10), sections 115.193, 115.194, 115.201–203, 115.221–223, 115.231–233, 115.251–255, 115.261–264, and 115.421–424) were adopted by the Texas Air Control Board on July 11, 1980 and submitted by the Governor on July 25, 1980.

(35) [Reserved]

(36) Revisions to Regulation VI (i.e., section 116.1, section 116.2, section 116.3(a), section 116.3(a)(2), the addition of sections 116.3(a)(3), 116.3(a)(4), and 116.3(a)(5), section 116.3(a)(6), section 116.3(b)(2), the addition of sections 116.3(b)(3), 116.3(b)(4), 116.4, and 116.5, section 116.6, section 116.7, and section 116.8) were adopted by the Texas Air Control Board on March 27, 1975 and submitted by the Governor on May 9, 1975.

(37) Revisions to Regulation VI (i.e., the deletion of 131.08.00.009) were adopted by the Texas Air Control Board on March 30, 1979 and submitted by the Governor on April 13, 1979.

(38) Revisions to Regulation VI (i.e., the deletion of 131.08.00.003(a)(3) and 131.08.00.003(a)(5), section 116.3(a)(4), section 116.3(a)(5), section 116.3(a)(9), section 116.3(a)(10), section 116.3(a)(12), and section 116.10) were adopted by the Texas Air Control Board on March 20, 1981 and submitted by the Governor on July 20, 1981.

(39) [Reserved]

(40) Revisions to Subchapter 115.135 (formerly 131.07.54.105) of Regulation V were adopted by the Texas Air Control Board on September 7, 1979 and submitted by the Governor to EPA on November 2, 1979 (i.e., removal of Jefferson, Orange, El Paso, Nueces, and Travis Counties).

(41) The Texas Lead SIP was submitted to EPA on June 12, 1980, by the Governor of Texas, as adopted by the Texas Air Control Board on March 21, 1980. Additional information was submitted in letters dated January 29, 1982, March 15, 1982, June 3, 1982, June 15, 1982, August 23, 1982, and October 14, 1982. Also additional information and Board Order 82–11 were submitted in a letter dated December 3, 1982. No action is taken regarding the Dallas and El Paso areas.

(42) An administrative revision for Section VIII (Texas Air Pollution Emergency Episode Contingency Plan) and a revision to Regulation VIII (Control of Air Pollution Episodes) was submitted by the TACB on May 18, 1982 and December 29, 1981, respectively.

(43) A revision to Regulation V deleting Ector County from the provisions of subsections 115.111 and .113 was adopted on March 20, 1981 and submitted by the Governor on July 20, 1981.

(44) Revisions to Regulation I, sections 111.2(7), 111.3, 111.11, 111.12, 111.26, 111.61–111.65, and 111.71–111.76, for control of particulate matter and visible emissions as submitted by the Governor on January 22, 1974.

(45) Revisions to Regulation I, section 111.2 for control of particulate matter and visible emissions as submitted by the Governor on December 29, 1975.

(46) Revisions to Regulation I, Sections 111.2(8), 111.2(9), 111.22, 111.91 and 111.92 for control of particulate matter and visible emissions as submitted by the Governor on April 13, 1979.

(47) Revisions to section XII (Resources) as submitted by the Executive Director on July 6, 1982.

(48) Revisions to Subchapters 115.111–115.113 (formerly 131.07.52.101–131.07.52.104) regarding gasoline bulk terminals, 115.123–115.124 (formerly 131.07.53.101–131.07.53.103) regarding gasoline bulk plants, and 115.131–115.135 (formerly 131.07.54.101–131.07.54.105) regarding the filling of gasoline storage vessels at motor vehicle fuel dispensing facilities (Stage I vapor recovery at service stations) of Regulation V for the counties of Harris, Galveston, Brazoria, Bexar, Dallas, and Tarrant were adopted by the Texas Air Control Board on March 30, 1979 and submitted by the Governor to EPA on April 13, 1979.

(49) Revisions to Subchapters 115.111 and 115.113 (formerly 131.07.52.101 and 131.07.52.103) regarding gasoline bulk terminals, 115.121 and 115.123 (formerly 131.07.53.101 and 131.07.53.103) regarding gasoline bulk plants, and 115.131, 115.132, and 115.135 (formerly 131.07.54.101, 131.07.54.102, and 131.07.54.105) regarding the filling of gasoline storage vessels at motor vehicle fuel dispensing facilities (Stage I vapor recovery at service stations) of Regulation V were adopted by the Texas Air Control Board on July 11, 1980 and submitted by the Governor to EPA on July 25, 1980.

(50) Revisions to the General Rules (i.e., deletion of the definitions for chemical process plant, exhaust emission, gas processing plant, and nonmethane hydrocarbons, and revisions to the definitions for gasoline bulk plant, gasoline terminal, lowest achievable emission rate, standard conditions, submerged fill pipe, paper coating, and light-duty truck coating), Regulation I (i.e., the deletion of sections 111.61–111.65, revisions to title of sections 111.71–111.76 and section 111.71, addition of sections 111.81–111.83, deletion of section 111.91, and revisions to section 111.92), and Regulation V (i.e., section 115.1, sections 115.11–115.13, sections 115.31–115.32, sections 115.41–115.45, section 115.81, and section 115.91, all for Bexar County only: and, sections 115.101–115.106; title of sections 115.141–115.144 and section 115.141, section

115.142, and section 115.144; title of sections 115.151–115.153 and section 115.152, and section 115.153; sections 115.161–115.163 and title; title of sections 115.171–115.176 and section 115.173, section 115.175, and section 115.176; title of sections 115.191–115.194 and section 115.191, section 115.192, and section 115.193; title of sections 115.201–115.203 and section 115.203; title of sections 115.221–115.223 and sections 115.222–115.223; sections 115.231–115.233 and title; title of sections 115.251–115.255 and section 115.253, and section 115.255; section 115.401; title of sections 115.411–115.413 and sections 115.411 and 115.412; title only of sections 115.421–115.424) were adopted by the Texas Air Control Board on January 8, 1982, and submitted by the Governor on August 9, 1982, with an addendum from the State on January 13, 1983.

(51) A revision to Section III (Public Participation/Intergovernmental Coordination) was submitted by the Texas Air Control Board on August 17, 1982 and a letter of clarification was submitted on January 28, 1983. The revision also supercedes and deletes Section XIII which was approved on May 31, 1972.

(52) An administrative revision to Section IX, Air Quality Surveillance, was submitted by the TACB on June 22, 1983. (Nonregulatory)

(53) A revision to Regulation VI (i.e., the addition of section 116.11) was adopted by the Texas Air Control Board on December 3, 1982, and submitted by the Governor on May 13, 1983.

(54) Revisions to the Texas State Implementation Plan for lead for Dallas County (concerning a lead control plan for the area around the secondary lead smelter in West Dallas), were submitted to EPA on April 6, 1984, by the Governor of Texas, as adopted by the Texas Air Control Board on February 17, 1984.

(55) Revisions to the Texas State Implementation Plan for lead for Dallas County (concerning a lead control plan for the area around the secondary lead smelter in South Dallas), and revisions to Regulation III, chapter 113, Subchapter B, Lead Smelters in Dallas County, were submitted to EPA on July 16, 1984, by the Governor of Texas, as adopted by Texas Air Control Board on May 18, 1984. No action is taken on Regulation III, Sections 113.113 and 113.114.

(56) Revisions to the Texas State Implementation Plan for lead for El Paso County, with revisions to Regulation III, Chapter 113, Subchapter B, Nonferrous Smelters in El Paso County, were submitted to EPA on June 20, 1984, by the Governor of Texas, as adopted by Texas Air Control Board on February 17, 1984. Also, letters providing additional information were submitted by Texas on June 11 and June 28, 1984. No action is taken on Regulation III, Sections 113.111 113.112. The date of compliance listed in § 113.122 of February 28, 1989 (for section 113.53) is disapproved. EPA is taking no action on the attainment date for El Paso County.

(57)–(58) [Reserved]

(59) Revisions to TACB Regulation VI and definitions in the General Rules as adopted on June 10, 1983 and submitted by the Governor on December 22, 1983, including a letter of clarification on their definitions submitted by the Texas Air Control Board on March 27, 1984.

(60) The Alternative Emission Control Plan for the Exxon Baytown Refinery in Baytown, Texas was adopted by the Texas Air Control Board on March 18, 1983, in Board Order No. 83–2.

(61) Revisions to the plan for attainment of the standard for Ozone in Harris County were submitted by the Governor on December 9, 1982, January 3, 1984, and March 18, 1985.

(i) Revisions adopted on December 3, 1982, include the following changes to Regulation V and the general rules. New sections or subsections 115.105(7), 115.111(2)(b), 115.111(2)(c), 115.111(2)(d), 115.163, 115.164, 115.193(c)(5), 115.193(c)(6), 115.271, 115.272, 115.273, 115.274, 115.275, and 115.421 are added. Revisions to 115.106(b), 115.106(c), 115.113, 115.141, 115.142, 115.161, 115.162, 115.191(9)(a)(i), 115.251(a)(1), 115.252(a)(4), 115.252(b), 115.252(c), 115.253(a), 115.254, 115.255(c), and 115.401(b) were made. Section 101.1 of the general rules was revised to include definitions of new terms. The revisions also included the following commitments: emissions tracking, pages 87–88; projections of reasonable further progress, pages 91 and 93; and emission reduction commitments for

transportation control measures, Appendix V.

(ii) Revisions adopted on September 9, 1983, include revisions to Regulation IV. New sections or subsections 114.1(e), 114.1(f), 114.3, and 114.5 are added.

(iii) Revisions adopted on November 9, 1984 include the following:

(A) Recordkeeping and record submittal requirements, pages 12–13,

(B) Mechanics training program commitments, pages 17–18,

(C) Public Awareness Plan commitments, pages 19–20,

(D) Implementation Schedule, page 25(1–3),

(E) Reasonable Further Progress Chart, Table 13, and

(F) Department of Public Safety and Texas Air Control Board Rules and Regulations, Texas Vehicle Inspection Act Article XV, and Documentation to Authorize and Support the Implementation and Enforcement of the Texas Vehicle Parameter Inspection and Maintenance Program, Appendix X, containing the following documents:

—Senate Bill 1205

—Letters of commitment from Texas Department of Public Safety, City of Houston Police Department, and Harris County Sheriff

—Parameter Vehicle Emission Inspection and Maintenance Rules and Regulations for Official Vehicle Inspection Stations and Certified Inspectors, July 1, 1984

—Texas Motor Vehicle Laws, 1981–1982

—Rules and Regulations for Official Vehicle Inspection Stations and Certified Inspectors, November 11, 1983, Sections A, B, C pages C–1, C–16, C–17, C–18, C–26, C–27, and C–28, D, and E pages E–1, E–6, E–7, E–8, and E–9.

(62) Revision to the Texas State Implementation Plan for Good Engineering Practice—Stack Height regulations, Texas Air Control Board Regulation VI, § 116.3(a)(14), as adopted by the Texas Air Control Board on July 17, 1987, were submitted by the Governor of Texas on October 26, 1987. This revision included definitions for *owner or operator, emission limitation and emission standards, stack, a stack in existence, dispersion technique, good engineering practice, nearby, excessive concentration,* and regulations related to *stack height provisions* and *stack height procedures* for new source review.

(i) Incorporation by reference.

(A) Texas Air Control Board Regulation VI, § 116.3(a)(14), adopted by the Board on July 17, 1987.

(ii) Other material—one.

(63) Revisions to TACB Regulation VI and definitions in the General Rules were submitted by the Governor on December 13, 1985.

(i) Incorporation by reference. December 13, 1985 letter from the Governor to EPA, and Revisions adopted on September 20, 1985, include the following changes to Regulation VI and the General Rules. Revisions to § 116.11 were made, and § 101.1 of the General Rules was revised to include an amendment to the term *major facility/stationary source.*

(64) Board Order No. 85–2, an alternate emission reduction plan for the Continental Can Company, U.S.A. can coating plant in Longview, Texas was submitted by the Governor on July 25, 1985, as amendments to the Texas State Implementation Plan. The source is now subject to the legally enforceable requirements stated in Board Order No. 85–2 and in TACB Permit Number C–16765.

(i) Incorporation by reference.

(A) Texas Air Control Board Order No. 85–2 adopted on May 10, 1985, and TACB Permit Number C–16765 as revised November 21, 1986.

(65) In a October 26, 1987, letter, the Governor of Texas submitted a revision to the Texas State Implementation Plan for Lead in El Paso County. These revisions to the control strategy are adequate to demonstrate attainment by August 14, 1987, of the National Ambient Air Quality Standards for lead in El Paso County by modeling. Enclosed in this letter were Texas Air Control Board (TACB) Board Order No. 87–14 as passed and approved on August 14, 1987; the revisions to Regulation III, Subchapter B as appended to the Board Order; and a certification of Public Hearing.

(i) Incorporation by reference.

(A) TACB Board Order No. 87–14, as adopted on August 14, 1987.

(B) The March 23, 1988, letter and enclosures from TACB to EPA.

(66) Revisions to the plan for attainment of the standard for ozone in Dallas and Tarrant Counties were submitted by the Governor on September 30, 1985 and December 21, 1987.

(i) Incorporation by reference.

(A) Revisions to the Texas Air Control Board Regulation IV, Section 114.1 (c), (e), (f), 114.3, 114.5 (a), (b), (d), (e), (f), and (g) adopted July 26, 1985.

(B) Vehicle Inspection and Maintenance and Transportation Control Measures (VIMTCM), Appendix AG, Emission Reduction Commitments for Transportation Control Measures in Post-1982 SIP Areas adopted by the Texas Air Control Board on August 28, 1985.

(C) VIMTCM, Appendix AJ, Excerpted Senate Bill 725, section 35 (d) and (g) effective September 1, 1985; and House Bill 1593 sections 21 and 22 effective June 18, 1987.

(D) The following portions of VIMTCM, Appendix AK, Texas Vehicle Parameter Inspection and Maintenance Program adopted by the Texas Air Control Board on December 18, 1987.

1 Record keeping and Record submittal Requirements, pages 15–17
2 Quality Control, Audit and Surveillance Procedures, pages 17–18
3 Procedures to Assure that Noncomplying Vehicles are Not Operated on the Public Roads, pages 18–20
4 Mechanic Training Program, pages 21–23
5 A Public Awareness Plan, pages 23–25
6 Vehicle Maintenance Program (Antitampering), pages 25–27

(E) VIMTCM, Appendix AM, Department of Public Safety Rules and Regulations Concerning Vehicle Inspection and Maintenance Programs, Sections 1, 2, and 3 adopted by the Texas Air Control Board on December 18, 1987.

(F) VIMTCM, Appendix AN, Local Government Letters of Commitment to Enforce Vehicle Inspection and Maintenance Programs adopted by the Texas Air Control Board on December 18, 1987.

(67) Part II of the Visibility Protection Plan was submitted by the Governor on November 18, 1987. This submittal includes a visibility long-term strategy and general plan provisions as adopted by the Texas Air Control Board on September 18, 1987.

(i) Incorporation by reference.

(A) Revision entitled, ''State Implementation Plan Revisions for Visibility Protection in Class I Areas: Phase I, September 18, 1987'' (including Appendices A and B).

(B) Texas Air Control Board Order No. 87–15, adopted September 18, 1987.

(ii) Additional material.

(A) None.

(68) [Reserved]

(69) Revisions to the plan for attainment of the standard for ozone in Dallas and Tarrant Counties were submitted by the Governor on October 11, 1985, December 21, 1987, and December 13, 1988. EPA is approving these stationary source VOC regulations and commitments under part A, section 110 of the Clean Air Act. However, these regulations do not represent RACT under part D, section 172 of the Clean Air Act for numerous reasons, including cross-line averaging and director's equivalency determinations without first being submitted to and approved by EPA as a SIP revision.

(i) Incorporation by reference.

(A) Revisions to Texas Air Control Board Regulation V (31 TAC chapter 115), Control of Air Pollution from Volatile Organic Compounds: Rules 115.111 introductory paragraph; 115.111(2)(E); 115.111(2)(F); 115.113 introductory paragraph, 115.113 last entry in table; except El Paso County for Rules 115.131 introductory paragraph, 115.132(6), 115.132(7), 115.135 introductory paragraph, and 115.135 second to last entry in table; 115.162 introductory paragraph only; 115.163(b)(2); 115.163(b)(3); 115.164(b) first paragraph only; 115.164(b)(3); 115.164(b)(4); 115.171(a); except El Paso County for Rule 115.171(b); 115.175(f); 115.176(a); 115.176(c); 115.191(9)(A)(iii); 115.191(9)(A)(iv); 115.191(9)(A)(v); 115.193(c)(3); 115.223; except El Paso County for Rules 115.261 undesignated heading, 115.261 introductory paragraph, 115.262(a), and 115.264; as adopted by the Texas Air Control Board on July 26, 1985. Rules 115.171(c); 115.171(d); 115.176(d); 115.193(c) first paragraph only; 115.193(c)(1); 115.193(c)(2);115.193(c)(6); 115.193(d) first paragraph only; 115.193(e); 115.194; 115.201(b)(1); 115.202; 115.203(a); and

115.291 through 115.294 and the corresponding undesignated heading; as adopted by the Texas Air Control Board on December 18, 1987. Rules 115.111(4)(C); except El Paso County for Rule 115.111(5); 115.111(6); 115.111(7); 115.113 last entry in table; 115.131(2); except El Paso County for Rule 115.131(3); 115.131(4); 115.131(5); 115.132 introductory paragraph only; 115.132(2); 115.134(3); 115.135 last entry in table; 115.141(a); 115.141(b); 115.142(a) first paragraph; 115.142(b); 115.143(a); 115.143(b); 115.143(c); 115.144; 115.162(3)(B); 115.163(a); 115.163(c); 115.163(d); 115.164(b)(7); 115.171(e); 115.172(a) first paragraph only; 115.172(a)(1); 115.172(a)(3); 115.172(a)(4); 115.172(a)(5)(A); 115.172(a)(6); 115.172(a)(7); 115.172(b) first paragraph only; 115.172(b)(1); 115.173(a) first paragraph only; 115.173(a)(2); 115.173(a)(4)(A); 115.173(a)(4)(B); 115.173(a)(4)(E); 115.173(a)(6); 115.173(b) first paragraph only; 115.173(b)(2); 115.173(b)(4); 115.173(b)(5); 115.173(b)(10); 115.173(b)(11); 115.173(c); 115.174(a) first paragraph only; 115.174(a)(1)(A); 115.174(a)(1)(B); 115.174(a)(1)(C); 115.174(a)(7); 115.174(a)(8); 115.174(a)(9); 115.174(b) first paragraph only; 115.174(b)(2); 115.174(b)(4); 115.174(b)(5); 115.174(c); 115.175(e); 115.175(g); 115.176(e); 115.191(a) first paragraph only; 115.191(a)(8)(A); 115.191(a)(8)(B); 115.191(a)(8)(C); 115.191(a)(9)(C); 115.191(a)(11); 115.191(b); 115.191(c); 115.192(a); 115.192(b); 115.192(c); 115.193(f); 115.201(a); 115.201(b) first paragraph only; 115.201(b)(2) through 115.201(b)(6); 115.201(c); 115.203(b); 115.221(a) first paragraph only; 115.221(a)(4); and 115.221(b); as adopted by the Texas Air Control Board on October 14, 1988.

(B) Revisions to the Texas Air Control Board General Rules (31 TAC chapter 101), rule 101.1, Definitions for: automobile refinishing; consumer-solvent products; as adopted by the Texas Air Control Board on December 18, 1987. Rule 101.1, Definitions for: architectural coating; automotive primer or primer surfacers (used in automobile refinishing); automotive wipe-down solutions; coating application system; delivery vessel/tank-truck tank; exempt solvent; flexographic printing process; non-flat architectural coating; packaging rotogravure printing; publication rotogravure printing; rotogravure printing; surface coating processes; transfer efficiency; and vapor balance system; as adopted by the Texas Air Control Board on October 14, 1988.

(C) The following portions of the Post-1982 Ozone Control Strategies Dallas and Tarrant Counties Texas State Implementation Plan Revisions (TX82SIP), as adopted by the Texas Air Control Board on December 18, 1987.

(*1*)(d) Emissions Tracking, page 56 (last paragraph), 57, and 58.

(*2*)(e) Regulation Review, pages 58–60.

(*3*)(a) Emissions Reductions and Growth Unaffected by This Plan, page 63 (first two full paragraphs).

(*4*)(e) Transportation Control Measures, pages 67–68.

(*5*)(4) Projection of Reasonable Further Progress (RFP), pages 71–72.

(*6*)(5) Contengency Plan, page 72.

(*7*)(a) Emissions Reductions and Growth Unaffected by This Plan, page 75.

(*8*)(e) Transportation Control Measures, pages 79–80.

(*9*)(4) Projection of Reasonable Further Progress (RFP), pages 83–84.

(*10*)(5) Contingency Plan, page 84.

(D) TX82SIP, appendix AG, Emission Reduction Commitments for Transportation Control Measures in Post-1982 SIP Areas, as adopted by the Texas Air Control Board on December 18, 1987.

(E) Texas Air Control Board Order No. 85–06, as adopted July 26, 1985.

(F) Texas Air Control Board Order No. 87–18, as adopted December 18, 1987.

(G) Texas Air Control Board Order No. 88–10, as adopted October 14, 1988.

(ii) Additional Material.

(A) A letter dated September 25, 1989, from Allen Eli Bell, Executive Director, Texas Air Control Board to Robert E. Layton Jr., P.E., Regional Administrator, EPA Region 6.

(B) TX82SIP, (c) Additional Control Technique Guidelines (CTGs), pages 48–49.

(C) TX82SIP, appendix AL, Transportation Control Measure Evaluation and Documentation of Highway Vehicle Data adopted by the Texas Air Control Board on December 18, 1987.

(70) On March 12, 1982, the Governor of Texas submitted a request to revise

the Texas SIP to include an Alternative Emission Reduction Plan for the E.I. Du Pont de Nemours & Company's Sabine River Works at Orange, Orange County, Texas. This Bubble uses credits obtained from the shutdown of sixteen methanol storage tanks and a methanol truck and railcar loading terminal in lieu of controls on one cyclohexane storage tank and two methanol storage tanks.

(i) Incorporation by reference. (A) Texas Air Control Board Order No. 82–1, entitled ''E.I. Du Pont de Nemours and Company Incorporated'' passed and approved by the Board on January 8, 1982.

(ii) Additional material. (A) Letter dated October 23, 1989, from the Director of the Texas Air Control Board (TACB) Technical Support and Regulation Development Program, giving assurances that the State has resources and plans necessary to strive toward attainment and maintenance of the National Ambient Air Quality Standard (NAAQS) for ozone taking into account the influence of this Bubble on air quality.

(B) Letter dated May 31, 1988, from the Director of the TACB Technical Services Division, giving quantification of emissions and developmental information relative to volatile organic compound emissions from the storage and terminal facilities at the Du Pont plant.

(C) Letter dated June 21, 1988, from the Director of the TACB Technical Services Division, giving the throughput basis for emission calculations for the tanks and discussing status of the equipment in the trade.

(D) Record of Communication of a phone call from Bill Riddle, EPA Region 6 Emissions Trading Coordinator, to Clayton Smith and Wayne Burnop, Environmental Engineers for the TACB, dated November 7, 1989. TACB confirms that there has been no *shifting demand* for the bubble.

(E) Record of Communication of a phone call from Mr. Bertie Fernando, TACB Environmental Engineer, to Bill Riddle, EPA Region 6 Emissions Trading Coordinator, dated December 15, 1989. TACB gives the status of the equipment in the bubble as a follow up to the June 21, 1988, letter mentioned in paragraph (c) of this section.

(71) Revisions to section VIII of the Texas SIP entitled ''Texas Air Pollution Episode Contingency Plan'' as submitted by the Texas Air Control Board (TACB) in a letter dated October 2, 1987. Revisions to TACB Regulation VIII, 31 TAC Chapter 118, ''Emergency Episode Planning,'' as approved by TACB on July 16, 1987, and on April 14, 1989, and submitted by the Governor in letters dated October 26, 1987, and October 13, 1989, respectively.

(i) Incorporation by reference

(A) Amended TACB Regulation VIII, 31 TAC chapter 118, Rules 118.1(a), 118.1(b)(2), 118.1(c), 118.2, 118.3, 118.4, 118.5(d), 118.5(e), 118.5(f) and 118.6 as approved on July 17, 1987, and the repeal of Rule 118.7 as approved by TACB on July 17, 1987.

(B) Amended TACB Regulation VIII, 31 TAC chapter 118, Rules 118.1(b), 118.1(b)(1), Table 1 of Rule 118.1, first paragraph of Rule 118.5, and 118.5(1), 118.5(2), 118.5(3), as approved by TACB on April 14, 1989.

(C) TACB Order 87–10, approved July 17, 1987.

(D) TACB Order 89–01, approved April 14, 1989.

(E) Texas SIP section VIII ''Texas Air Pollution Episode Contingency Plan'' pages VIII–3 through VIII–14, VIII–A–2 through VIII–A–4, and VIII–B–2 through VIII–B–3.

(ii) Additional material

(A) Revisions to section VIII as submitted on October 2, 1987, from Eli Bell, superceding and deleting section VIII as approved by EPA on October 7, 1982, at 47 FR 44260 (Texas Air Pollution Emergency Episode Contingency Plan).

(B) A letter dated February 10, 1989, from Steven Spaw, TACB, to William B. Hathaway, U.S. EPA.

(72) Revisions to the plan for attainment of the standard for ozone in Dallas and Tarrant counties were submitted by the Governor on March 5, 1990 limiting the volatility of gasoline.

(i) Incorporation by reference. (A) Revisions to the Texas Air Control Board Regulation V (31 TAC chapter 115), Control of Air Pollution from Volatile Organic Compounds, Rule

115.242–249 as adopted by the Texas Air Control Board on December 8, 1989.

(B) Texas Air Control Board Order No. 89–13, as adopted December 8, 1988.

(73) Revisions for Prevention of Significant Deterioration (PSD) are: Regulation VI—Section 116.3(a)(13) as adopted by the Texas Air Control Board (TACB) on July 26, 1985 and as revised by the TACB on July 17, 1987 and July 15, 1988 and submitted by the Governor on December 11, 1985, October 26, 1987, and September 29, 1988, respectively; the PSD Supplement as adopted by the TACB on July 17, 1987 and submitted by the Governor on October 26, 1987; General Rules—Section 101.20(3) as adopted by the TACB on July 26, 1985 and submitted by the Governor on December 11, 1985; and the TACB commitment letters submitted by the Executive Director on September 5, 1989 and April 17, 1992. Approval of the PSD SIP is partially based on previously approved TACB regulations and State statutes.

(i) *Incorporation by reference.*

(A) Revisions to the TACB Regulation VI (31 TAC chapter 116)—Control of Air Pollution by Permits for New Construction or Modification: Rule 116.3(a)(13) as adopted by the TACB on July 26, 1985 and as revised by the TACB on July 17, 1987 and July 15,1988.

(B) Revision to TACB General Rules (31 TAC Chapter 101)—Rule 101.20(3) as adopted by the TACB on July 26, 1985.

(C) TACB Board Order No. 85–07, as adopted on July 26, 1985.

(D) TACB Board Order No. 87–09, as adopted on July 17, 1987.

(E) TACB Board Order No. 88–08, as adopted on July 15, 1988.

(F) The following portions of the PSD Supplement, as adopted by the TACB on July 17, 1987: 1. (2) Initial Classification of areas in Texas, pages 1–2; 2. (3) Re-designation procedures, page 2; 3. (4) plan assessment, pages 2–3; 4. (6) Innovative Control Technology, page 3; and 5. (7) Notification, (a) through (d), page 4.

(ii) *Additional material.*

(A) The PSD Supplement as adopted by the TACB on July 17, 1987.

(B) A letter dated September 5, 1989, from the Executive Director of the TACB to the Regional Administrator of EPA Region 6.

(C) A letter dated April 17, 1992, from the Executive Director of the TACB to the Division Director of Air, Pesticides and Toxics Division, EPA Region 6.

(74) Revisions to Texas Air Control Board's volatile organic compound regulations were submitted by the Governor of Texas on July 16, 1990.

(i) Incorporation by reference

(A) Revisions to Texas Air Control Board Regulation V (31 TAC Chapter 115) Control of Air Pollution from Volatile Organic Compounds, Subchapter E: Solvent-Using Processes, Surface Coating Processes, §115.421 introductory paragraph, §115.421(8)(A), §115.425 introductory paragraph, §115.425(3), §115.429 introductory paragraph, and §115.429(2)(E), as adopted by the Texas Air Control Board on June 22, 1990.

(B) Texas Air Control Board Order No. 90–07 as adopted by the Texas Air Control Board on June 22, 1990.

(ii) Additional material

(A) Texas Air Control Board July 10, 1990, certification signed by Steve Spaw, P.E., Executive Director, Texas Air Control Board.

(75) Revisions to the State Implementation Plan for particulate matter (PM_{10} Group III) General Rules (31 TAC Chapter 101), §101.1 Definitions for ''De minimis impact'', ''Particulate matter'', ''Particulate matter emissions'', ''PM_{10}'', ''PM_{10} emissions'', and ''Total suspended particulate'', as adopted on June 16, 1989, by the Texas Air Control Board (TACB), were submitted by the Governor on August 21, 1989.

(i) Incorporation by reference.

(A) General Rules (31 TAC Chapter 101), Section 101.1 Definitions for ''De minimis impact'', ''Particulate matter'', ''Particulate matter emissions'', ''PM_{10}'', ''PM_{10} emissions'', and ''Total suspended particulate'', as adopted on June 16, 1989, by the TACB.

(ii) Additional material—None.

(76) A revision to the Texas State Implementation Plan (SIP) to include revisions to Texas Air Control Board (TACB) Regulation II, 31 TAC Chapter 112. Control of Air Pollution from Sulfur Compounds, submitted by the Governor by cover letter dated October 15, 1992.

(i) Incorporation by reference.

(A) Revisions to Texas Air Control Board (TACB), Regulation II, 31 TAC Chapter 112, Section 112.1, ''Definitions;'' Section 112.2, ''Compliance, Reporting, and Recordkeeping;'' Section 112.3, ''Net Ground Level Concentrations;'' Section 112.4, ''Net Ground Level Concentration—Exemption Conditions;'' Section 112.5, ''Allowable Emission Rates—Sulfuric Acid Plant Burning Elemental Sulfur;'' Section 112.6, ''Allowable Emission Rates—Sulfuric Acid Plant;'' Section 112.7, ''Allowable Emission Rates—Sulfur Recovery Plant;'' Section 112.8, ''Allowable Emission Rates From Solid Fossil Fuel-Fired Steam Generators,'' Subsections 112.8(a), except for the phrase ''Except as provided in subsection (b) of this section,'' 112.8(c), 112.8(d), 112.8(e); Section 112.9, ''Allowable Emission Rates—Combustion of Liquid Fuel;'' Section 112.14, ''Allowable Emission Rates—Nonferrous Smelter Processes;'' Section 112.15, ''Temporary Fuel Shortage Plan Filing Requirements;'' Section 112.16, ''Temporary Fuel Shortage Plan Operating Requirements;'' Section 112.17, ''Temporary Fuel Shortage Plan Notification Procedures;'' Section 112.18, ''Temporary Fuel Shortage Plan Reporting Requirements;'' Section 112.19, ''Application for Area Control Plan;'' Section 112.20, ''Exemption Procedure;'' and Section 112.21, ''Allowable Emission Rates Under Area Control Plan,'' as adopted by the TACB on September 18, 1992.

(B) Texas Air Control Board Order No. 92–19, as adopted by the Texas Air Control Board on September 18, 1992.

(ii) Additional material.

(A) Texas Air Control Board certification letter dated October 1, 1992, and signed by William R. Campbell, Executive Director, Texas Air Control Board.

(B) Texas Air Control Board clarification letter dated July 5, 1993, from William R. Campbell, Executive Director, Texas Air Control Board, to A. Stanley Meiburg, Director, Air, Pesticides, and Toxics Division, EPA Region 6.

(77) Revisions to Texas Air Control Board Regulation V (31 TAC Chapter 115), Control of Air Pollution from Volatile Organic Compounds, were submitted by the Governor on March 5, 1990, July 16, 1990, May 10, 1991, and September 30, 1991.

(i) Incorporation by reference.

(A) Revisions to Texas Air Control Board Regulation V (31 TAC Chapter 115), Control of Air Pollution from Volatile Organic Compounds, as adopted by the Texas Air Control Board on December 8, 1989.

(B) Revisions to Texas Air Control Board Regulation V (31 TAC Chapter 115), Control of Air Pollution from Volatile Organic Compounds, as adopted by the Texas Air Control Board on June 22, 1990: 115.425(1)(D) and 115.425(1)(E).

(C) Revisions to Texas Air Control Board Regulation V (31 TAC Chapter 115), Control of Air Pollution from Volatile Organic Compounds, as adopted by the Texas Air Control Board on May 10, 1991: 115.010—Definitions for coating, coating line, leak, pounds of volatile organic compounds (VOC) per gallon of coating (minus water and exempt solvents), pounds of volatile organic compounds (VOC) per gallon of solids, printing line, volatile organic compound (VOC), 115.112(c), 115.114 introductory paragraph, 115.114(3), 115.116(1), 115.116(3)(B) through 115.116(3)(D), 115.119(a)(1), 115.119(a)(2), 115.122(a)(3), 115.126(1)(B) through 115.126(1)(E), 115.129(a)(1), 115.129(a)(2), 115.132(a)(4), 115.136, 115.139(a)(1), 115.139(a)(2), 115.212(a)(4), 115.212(a)(5), 115.212(a)(6), 115.215(5), 115.216(2)(B) through 115.216(2)(D), 115.219(a)(1) through 115.219(a)(3), 115.222(7) through 115.222(9), 115.229(1), 115.229(2), 115.239, 115.315(2), 115.316(1)(A) through 115.316(1)(D), the repeal of 115.317, 115.319(1), 115.319(2), 115.322(4), 115.324(1)(A), 115.324(1)(B), 115.324(2)(A) through 115.324(2)(E), 115.325(2), 115.327(1) through 115.327(5), 115.329 introductory paragraph, 115.329(1), 115.329(2) 115.332 introductory paragraph, 115.332(4), 115.334(1)(D), 115.334(1)(E), 115.334(2), 115.335 introductory paragraph, 115.335(2), 115.336 introductory paragraph, 115.337(1) through 115.337(5), 115.339, 115.342(4), 115.344(1)(D), 115.344(1)(E), 115.344(2), 115.345(2), 115.347(1) through 115.347(6), 115.349, 115.417(3) through 115.417(6), 115.419(1) through 115.419(3), 115.421 introductory paragraph, 115.421(1)

through 115.421(8)(B) introductory paragraph, 115.421(8)(C) through 115.421(9)(A)(v), 115.421(9)(C), 115.422 introductory paragraph, 115.422(1), 115.422(1)(A) through 115.422(1)(C), 115.422(2), 115.423(2) through 115.423(4), 115.424 introductory paragraph, 115.424(1) through 115.424(3), 115.425(2), 115.425(3)(B)(i), 115.425(3)(B)(iii), 115.426 introductory paragraph, 115.426(2), 115.426(2)(A)(ii) through 115.426(2)(A)(iv), 115.426(3), 115.427(6), 115.427(6)(A), 115.427(6)(B), 115.427(7), 115.429(1), 115.429(2)(A), 115.429(2)(B), 115.432 introductory paragraph, 115.432(1), 115.432(1)(A) through 115.432(1)(C)(iii), 115.432(2), 115.432(3), 115.435(5) through 115.435(7), 115.436(3)(B) through 115.436(3)(D), 115.437(1), 115.437(2), 115.439(1), 115.439(2), 115.512(3), 115.519, 115.532(5), 115.536(2)(A)(ii) through 115.536(2)(A)(iv), 115.537(5), 115.537(6), 115.539(1), 115.539(2).

(D) Revisions to Texas Air Control Board Regulation V (31 TAC Chapter 115), Control of Air Pollution from Volatile Organic Compounds, as adopted by the Texas Air Control Board on September 20, 1991: 115.010—Definitions for capture efficiency, capture system, carbon adsorber, carbon adsorption system, control device and control system, 115.126(1), 115.129(a)(3), 115.136, 115.139(a)(2), 115.224(2), 115.229(2), 115.422(2), 115.423(3), 115.425(4) through 115.425(4)(C)(iii), 115.426(3), 115.426(4), 115.429(2)(C), 115.435 introductory paragraph, 115.435(7) through 115.435(7)(C)(iii), 115.435(8), 115.436(6), 115.439(2).

(78) Revision to the Texas State Implementation Plan for Prevention of Significant Deterioration adopted by the Texas Air Control Board (TACB) on December 14, 1990, and submitted by the Governor on February 18, 1991.

(i) Incorporation by reference.

(A) Revision to TACB Regulation VI (31 TAC Chapter 116)—Control of Air Pollution by Permits for New Construction or Modification: Section 116.3(a)(13) as adopted by the TACB on December 14, 1990, and effective January 7, 1991.

(B) TACB Board Order No. 90–13, as adopted on December 14, 1990.

(79) A revision to the Texas SIP addressing moderate PM–10 nonattainment area requirements for El Paso was submitted by the Governor of Texas by letter dated November 5, 1991. The SIP revision included, as per section 179B of the Clean Air Act, a modeling demonstration providing for timely attainment of thePM–10 National Ambient Air Quality Standards for El Paso but for emissions emanating from Mexico.

(i) Incorporation by reference.

(A) Revisions to Texas Air Control Board (TACB), Regulation I, Section 111.101, ''General Prohibition;'' Section 111.103, ''Exceptions to Prohibition of Outdoor Burning;'' Section 111.105, ''General Requirements for Allowable Outdoor Burning;'' Section 111.107, ''Responsibility for Consequences of Outdoor Burning;'' Section 111.143, ''Materials Handling;'' Section 111.145, ''Construction and Demolition,'' Subsections 111.145(1), 111.145(2); Section 111.147, ''Roads, Streets, and Alleys,'' Subsections 111.147(1)(B), 111.147(1)(C), 111.147(1)(D); and Section 111.149, ''Parking Lots,'' as adopted by the TACB on June 16, 1989.

(B) TACB Order No. 89–03, as adopted by the TACB on June 16, 1989.

(C) Revisions to TACB, Regulation I, Section 111.111, ''Requirements for Specified Sources,'' Subsection 111.111(c); Section 111.141, ''Geographic Areas of Application and Date of Compliance;'' Section 111.145, ''Construction and Demolition,'' Subsections 111.145(first paragraph), 111.145(3); and Section 111.147, ''Roads, Streets, and Alleys,'' Subsections 111.147(first paragraph), 111.147(1)(first paragraph), 111.147(1)(A), 111.147(1)(E), 111.147(1)(F), and 111.147(2), as adopted by the TACB on October 25, 1991.

(D) TACB Order No. 91–15, as adopted by the TACB on October 25, 1991.

(E) City of El Paso, Texas, ordinance, Title 9 (Health and Safety), Chapter 9.38 (Woodburning), Section 9.38.010, ''Definitions;'' Section 9.38.020, ''No-Burn Periods;'' Section 9.38.030, ''Notice Required;'' Section 9.38.040, ''Exemptions;'' Section 9.38.050, ''Rebuttable Presumption;'' and Section 9.38.060, ''Violation Penalty,'' as adopted by the City Council of the City of El Paso on December 11, 1990.

(ii) Additional material.

(A) November 5, 1991, narrative plan addressing the El Paso moderate PM–10

nonattainment area, including emission inventory, modeling analyses, and control measures.

(B) A Memorandum of Understanding between the TACB and the City of El Paso defining the actions required and the responsibilities of each party pursuant to the revisions to the Texas PM–10 SIP for El Paso, passed and approved on November 5, 1991.

(C) TACB certification letter dated July 27, 1989, and signed by Allen Eli Bell, Executive Director, TACB.

(D) TACB certification letter dated October 28, 1991, and signed by Steve Spaw, Executive Director, TACB.

(E) El Paso PM–10 SIP narrative from pages 91–92 that reads as follows: ''* * * provided that adequate information becomes available, a contingency plan will be developed in conjunction with future El Paso PM–10 SIP revisions. It is anticipated that EPA, TACB, the City of El Paso, and SEDUE will continue a cooperative effort to study the PM–10 air quality in the El Paso/Juarez air basin. Based on the availability of enhanced emissions and monitoring data, as well as more sophisticated modeling techniques (e.g., Urban Airshed Model), future studies will attempt to better define the relative contributions of El Paso and Juarez to the PM–10 problem in the basin. At that time, a contingency plan can more appropriately be developed in a cooperative effort with Mexico.''

(80) A revision to the Texas State Implementation Plan to adopt an alternate control strategy for the surface coating processes at Lockheed Corporation of Fort Worth.

(i) Incorporation by reference.

(A) Texas Air Control Board Order Number 93–13 issued and effective June 18, 1993, for Lockheed Corporation, Fort Worth approving an Alternate Reasonably Available Control Technology (ARACT). A letter from the Governor of Texas dated August 19, 1993, submitting to the EPA the ARACT demonstration.

(ii) Additional material–the document prepared by GD titled ''The Proposed Alternate Reasonably Available Control Technology Determination for U.S. Air Force Plant Number Four and Ancillary Facilities of General Dynamics'' dated September 16, 1991.

(81) A revision to the Texas SIP to include revisions to Texas Regulation V, 31 TAC §§115.241–115.249–Control of Vehicle Refueling Emissions (Stage II) at Motor Vehicle Fuel Dispensing Facilities adopted by the State on October 16, 1992, effective November 16, 1992, and submitted by the Governor by cover letter dated November 13, 1992.

(i) Incorporation by reference.

(A) Revisions to Texas Regulation V, 31 TAC §§115.241–115.249–Control of Vehicle Refueling Emissions (Stage II) at Motor Vehicle Fuel Dispensing Facilities, effective November 16, 1992.

(B) Texas Air Control Board Order No. 92–16, as adopted October 16, 1992.

(ii) Additional materials.

(A) September 30, 1992, narrative plan addressing: general requirements, definitions, determination of regulated universe, certification of approved vapor recovery systems, training, public information, recordkeeping, requirements for equipment installation and testing, annual in-use above ground inspections, program penalties, resources, and benefits.

(82) A revision to the Texas SIP to include a new Texas Natural Resource Conservation Commission, Part III, Chapter 101, *General Rules*, section 101.10, *Emission Inventory Requirements*. In a concurrent action, the TNRCC repealed the existing section 101.10 concerning filing of emissions data. The new rule and the repealing of the old rule was submitted to the EPA on October 15, 1992, by the Governor, as a proposed revision to the SIP.

(i) Incorporation by reference.

(A) TNRCC, Part III, Chapter 101, *General Rules*, section 101.10, *Emission Inventory Requirements*, as adopted by the TNRCC on August 20, 1992.

(B) TNRCC Order No. 92–20, as adopted by the TNRCC on August 20, 1992.

(ii) Additional material.

(A) TNRCC certification letter dated October 8, 1992, and signed by William R. Campbell, Executive Director, TNRCC.

(83) A revision to the Texas SIP to include an alternate particulate control plan for certain unpaved industrial roadways at the ASARCO copper smelter in El Paso, submitted by the Governor by cover letter dated March 30, 1994.

(i) Incorporation by reference.

(A) Texas Natural Resource Conservation Commission Order No. 94–01, as adopted by the Texas Natural Resource Conservation Commission on March 9, 1994.

(B) TNRCC Attachment 3 containing the Texas Air Control Board permit number 20345 for the ASARCO primary copper smelter in El Paso, Texas, issued May 11, 1992.

(C) TNRCC Attachment 4 containing the June 8, 1993, letter from Mr. Troy W. Dalton, Texas Air Control Board (TACB), to Mr. Thomas Diggs, U.S. EPA Region 6, addressing the ASARCO Inc. (El Paso) waiver request from TACB Regulation I, Section 111.147(1)(A), including the enclosure entitled ''Waiver Provisions to Texas Air Control Board Regulation 111.147(1)(A) for ASARCO, Incorporated, El Paso Account No. EE–0007–G.''

(ii) Additional material.

(A) March 9, 1994, SIP narrative addressing the alternate particulate control plan (in lieu of paving) for certain unpaved industrial roadways at the ASARCO copper smelter in El Paso.

(84) A revision to the Texas SIP for the El Paso moderate carbon monoxide nonattainment area which has a design value less than 12.7 parts per million was submitted by the Governor of Texas to meet the November 15, 1992, CAA deadline. The elements in this incorporation include the general SIP revision and the oxygenated fuels regulations submitted to the EPA on October 23, 1992, and the completed emissions inventory submitted to the EPA on November 17, 1992.

(i) Incorporation by reference.

(A) Addition of a new Section 114.13, ''Oxygenated Fuels'' to the Texas Air Control Board (TACB), Regulation IV.

(B) TACB Board Order Number 92–15, as adopted by the TACB on September 18, 1992.

(C) SIP narrative plan entitled ''Revisions to the State Implementation Plan (SIP) for Carbon Monoxide (CO), 1992 CO SIP for Moderate Area—El Paso,'' adopted by the Texas Air Control Board September 18, 1992, addressing: 3. 1992 CO SIP Revisions for Moderate Area El Paso (new.) e. Attainment Demonstration, pages 9–10; f. Oxygenated Fuels 3) Administrative Requirements, page 13, b) Clerical Reviews, page 15, c) Field Inspections, page 15; and e) enforcement (i)–(iv), pages 17–19.

(ii) Additional material.

(A) SIP narrative plan entitled ''Revisions to the State Implementation Plan (SIP) for Carbon Monoxide (CO), 1992 CO SIP for Moderate Area—El Paso,'' adopted by the Texas Air Control Board September 18, 1992.

(B) Governor of Texas submittal of November 13, 1992, regarding the El Paso CO emissions inventory.

(C) The TACB certification letter dated October 1, 1992, and signed by William R. Campbell, Executive Director, TACB.

(85) The State is required to implement a Small Business Stationary Source Technical and Environmental Compliance Assistance Program (PROGRAM) as specified in the plan revision submitted by the Governor on November 13, 1992. This plan submittal, as adopted by the Texas Air Control Board (TACB) on November 6, 1992, was developed in accordance with section 507 of the Clean Air Act (CAA).

(i) Incorporation by reference.

(A) Texas Clean Air Act (TCAA), TEXAS HEALTH AND SAFETY CODE ANN. (Vernon 1992), § 382.0365, ''Small Business Stationary Source Assistance Program'', enacted by the Texas 1991 legislative session and effective September 1, 1991. Included in TCAA, § 382.0365, are provisions establishing a small business assistance program (SBAP), an Ombudsman, and a Compliance Advisory Panel (CAP); establishing membership of the CAP; and addressing the responsibilities and duties of the SBAP, Ombudsman, and the CAP.

(B) TACB Order No. 92–22, as adopted by the TACB on November 6, 1992.

(C) Appendix C, ''Schedule of Implementation'', appended to the narrative SIP Revision entitled, ''Revisions to the State Implementation Plan for the Small Business Stationary Source Technical and Environmental Compliance Assistance Program, Texas Air Control Board; November 1992''.

(ii) Additional material.

(A) Narrative SIP Revision entitled, ''Revisions to the State Implementation Plan for the Small Business Stationary Source Technical and Environmental Compliance Assistance Program, Texas Air Control Board; November 1992''.

(B) TACB certification letter dated November 10, 1992, and signed by William R. Campbell, Executive Director, TACB.

(C) Legal opinion letter dated October 15, 1992 from Kirk P. Watson, Chairman, TACB, to Mr. B.J. Wynne, III, Regional Administrator, EPA Region 6, regarding the composition of the Small Business Compliance Advisory Panel for Texas.

(86) [Reserved]

(87) A revision to the Texas SIP to include revisions to Texas Regulation IV, 31 TAC § 114.3—Vehicle Emissions Inspection and Maintenance Program, adopted by the State on November 10, 1993, and February 16, 1994, regulations effective December 8, 1993, and revisions to Texas Department of Transportation, Chapter 17. Vehicle Titles and Registration—Vehicle Emissions Verification System, 43 TAC § 17.80, adopted by the State on October 28, 1993, effective November 22, 1993, and submitted by the Governor by cover letters dated November 12, 1993 and March 9, 1994.

(i) Incorporation by reference.

(A) House Bill 1969 an act relating to motor vehicle registration, inspections and providing penalties amending:

(*1*) Sections 382.037 and 382.038 of the Texas Health and Safety Code;

(*2*) Section 2 Chapter 88, General Laws, Acts of the 41st Legislature, 2nd Called Session, 1929 (Article 6675a–2, Vernon's Texas Civil Statutes);

(*3*) Title 116, Articles 6675b–4, 6675b–4A, and 6675b–4B;

(*4*) Section 141(d), and section 142(h), Uniform Act Regulating Traffic on Highways (Article 6701d, Vernon's Civil Statutes);

(*5*) Section 4.202, County Road and Bridge Act (Article 6702–1, Vernon's Texas Civil Statutes) signed by the Governor on June 8, 1993, and effective August 30, 1993.

(B) Texas Health and Safety Code (Vernon 1990), the Texas Clean Air Act, sections 382.017, 382.037, 382.038, and 382.039 effective September 1, 1991.

(C) Revisions to Texas Regulation IV, 31 TAC § 114.3—Vehicle Emissions Inspection and Maintenance Program, effective December 8, 1993.

(D) Order No. 93–23, as adopted November 10, 1993, and Order No. 94–02 as adopted February 16, 1994.

(E) Texas Civil Statutes, Articles 6675a–1 to 6675b–2 and 6687–1. (Vernon 1993).

(F) Revisions to Texas Department of Transportation, Chapter 17. Vehicle Titles and Registration—Vehicle Emissions Verification System, 43 TAC § 17.80, effective November 22, 1993.

(ii) Additional materials.

(A) SIP narrative plan entitled ''Revisions to the State Implementation Plan (SIP) for the Control of Ozone Air Pollution—Inspection/Maintenance SIP for Dallas/Fort Worth, El Paso, Beaumont/Port Arthur, and Houston/Galveston Ozone Nonattainment Areas,'' submitted to the EPA on November 12, 1993, and on March 9, 1994 addressing by section: 8(a)(1) Applicability, 8(a)(2) Adequate Tools and Resources, 8(a)(3) I/M Performance Standards, 8(a)(4) Network Type and Program Evaluation, 8(a)(5) Test Frequency and Convenience, 8(a)(6) Vehicle coverage, 8(a)(7) Test Procedures and Standards and Test Equipment, 8(a)(8) Quality Control, 8(a)(9) Quality Assurance, 8(a)(10) Waivers and Compliance Via Diagnostic Inspection, 8(a)(11) Motorist Compliance Enforcement, 8(a)(12) Motorist Compliance Enforcement Program Oversight, 8(a)(13) Enforcement Against Contractors, Stations and Inspectors, 8(a)(14) Compliance with Recall Notices, 8(a)(15) Data Collection, 8(a)(16) Data Analysis and Reporting, 8(a)(17) Inspector Training and Licensing or Certification, 8(a)(18) Public Information, 8(a)(19) Consumer Protection Provisions, 8(a)(20) Improving Repair Effectiveness, 8(a)(21) On-Road Testing, 8(a)(22) State Implementation Plan Submission and Appendices.

(B) Letter dated May 4, 1994, from John Hall, Chairman of the Texas Natural Resource Conservation Commission to the EPA, clarifying the State's intent regarding its Executive Director's exemption policy and repair effectiveness program.

(88) Revisions to the Texas State Implementation Plan, submitted to EPA on June 8 and November 13, 1992, respectively. These revisions adopt expansion of applicability for Reasonably Available Control Technology (RACT) rules for volatile organic compounds (VOCs) to ensure that all major VOC sources are covered by RACT, to revise the major source definition, and to revise certain monitoring, recordkeeping, and reporting requirements for Victoria County, Texas.

(i) Incorporation by reference.

(A) Texas Air Control Board Order No. 92–04, as adopted on May 8, 1992.

(B) Revisions to the General Rules, as adopted by the Board on May 8, 1992, section 101.1—New definitions for capture efficiency, capture system, carbon adsorber, carbon adsorption system, coating, coating line, control device, control system, pounds of volatile organic compounds (VOC) per gallon of coating (minus water and exempt solvents), pounds of volatile organic compounds (VOC) per gallon of solids, printing line; revised definitions for component, exempt solvent, leak, vapor recovery system, volatile organic compound (VOC).

(C) Revisions to Regulation V, as adopted by the Board on May 8, 1992, sections 115.010 (Definitions)—Beaumont/Port Arthur area, Dallas/Fort Worth area, El Paso area, Houston/Galveston area; revised definition for delivery vessel/tank truck tank; 115.112(a), 115.112(a)(3), 115.112(b)(1), 115.112(b)(2), 115.112(b)(2)(A) through 115.112(b)(2)(D), 115.112(b)(2)(E), 115.112(b)(2)(F), 115.112(c), 115.112(c)(3)(A), 115.112(c)(3)(B), 115.113(a) through 115.113(c), 115.114(a), 115.114(b), 115.114(b)(1), 115.114(b)(2), 115.115(a), 115.115(b), 115.115(b)(1) through 115.115(b)(8), 115.116(a), 115.116(a)(4), 115.116(b), 115.116(b)(1) through 115.116(b)(4), 115.117(a), 115.117(b), 115.117(b)(1) through 115.117(b)(6), 115.117(b)(6)(A) through 115.117(b)(6)(C), 115.117(b)(7), 115.117(b)(7)(A) through 115.117(b)(7)(C), 115.117(c), 115.117(c)(1) through 115.117(c)(4), 115.119 introductory paragraph, 115.121(a), 115.121(a)(1), 115.121(a)(1)(C), 115.121(a)(2), 115.121(a)(3), 115.121(b), 115.121(b)(1) through 115.121(b)(3), 115.121(c), 115.121(c)(1), 115.121(c)(2) through 115.121(c)(4), 115.122(a), 115.122(b), 115.122(c), 115.122(c)(1) through 115.122(c)(4), 115.123(a) through 115.123(c), 115.125(a), 115.125(a)(2), 115.125(b), 115.125(b)(1) through 115.125(b)(7), 115.126 introductory paragraph, 115.127(a), 115.127(a)(2), 115.127(a)(3), 115.127(a)(3)(B), 115.127(a)(3)(C), 115.127(a)(4), 115.127(a)(4)(C), 115.127(b), 115.127(b)(1), 115.127(b)(2), 115.127(b)(2)(A) through 115.127(b)(2)(B), 115.127(c), 115.127(c)(1), 115.127(c)(2), 115.127(c)(2)(A) through 115.127(c)(2)(C), 115.129 introductory paragraph, 115.129(1) through 115.129(3), 115.131(a), 115.131(a)(2) through 115.131(a)(4), 115.131(b) through 115.131(c), 115.132(a), 115.132(b), 115.132(b)(1) through 115.132(b)(3), 115.132(c), 115.132(c)(3), 115.133(a) through 115.133(c), 115.135(a), 115.135(b), 115.135(b)(1) through 115.135(b)(6), 115.136(a), 115.136(a)(1), 115.136(a)(2), 115.136(a)(2)(A) through 115.136(a)(2)(D), 115.136(a)(3), 115.136(a)(4), 115.136(b), 115.137(a), 115.137(a)(1) through 115.137(a)(4), 115.137(b), 115.137(b)(1) through 115.137(b)(4), 115.137(c), 115.137(c)(1) through 115.137(c)(3), 115.139 introductory paragraph, 115.139(1), 115.139(2), 115.211 introductory paragraph, 115.211(1)(A), 115.211(1)(B), 115.211(2), 115.212(a), 115.212(a)(4), 115.212(a)(5), 115.212(b), 115.212(b)(1), 115.212(b)(2), 115.212(b)(2)(A), 115.212(b)(2)(B), 115.212(b)(3), 115.212(b)(3)(A) through 115.212(b)(3)(C), 115.212(c), 115.212(c)(1), 115.213(a) through 115.213(c), 115.214(a), 115.214(a)(3), 115.214(a)(4), 115.214(b), 115.214(b)(1), 115.214(b)(2), 115.215(a), 115.215(b), 115.215(b)(1) through 115.215(b)(8), 115.216 introductory paragraph, 115.216(4), 115.217(a), 115.217(a)(2) through 115.217(a)(4), 115.217(b), 115.217(b)(1) through 115.217(b)(3), 115.217(c), 115.217(c)(3), 115.219 introductory paragraph, 115.219(1) through 115.219(6), 115.221 introductory paragraph, 115.222 introductory paragraph, 115.222(6), 115.223 introductory paragraph, 115.224 introductory paragraph, 115.224(2), 115.225 introductory paragraph, 115.226 introductory paragraph, 115.227 introductory paragraph, 115.229 introductory paragraph, 115.234 introductory paragraph, 115.235 introductory

paragraph, 115.236 introductory paragraph, 115.239 introductory paragraph, 115.311(a), 115.311(a)(1), 115.311(a)(2), 115.311(b), 115.311(b)(1), 115.311(b)(2), 115.312(a), 115.312(a)(2), 115.312(b), 115.312(b)(1), 115.312(b)(1)(A), 115.312(b)(1)(B), 115.312(b)(2), 115.313(a) through 115.313(b), 115.315(a), 115.315(b), 115.315(b)(1) through 115.315(b)(7), 115.316 introductory paragraph, 115.316(1), 115.316(2), 115.316(3), 115.317 introductory paragraph, 115.319 introductory paragraph, 115.319(1), 115.319(2), 115.322(a), 115.322(b), 115.322(b)(1) through 115.322(b)(5), 115.323(a), 115.323(a)(2), 115.323(b), 115.323(b)(1), 115.323(b)(2), 115.324(a), 115.324(a)(4), 115.324(b), 115.324(b)(1), 115.324(b)(1)(A) through 115.324(b)(1)(D), 115.324(b)(2), 115.324(b)(2)(A) through 115.324(b)(2)(C), 115.324(b)(3) through 115.324(b)(8), 115.324(b)(8)(A), 115.324(b)(8)(A)(i), 115.324(b)(8)(A)(ii), 115.324(b)(8)(B), 115.325(a), 115.325(b), 115.325(b)(1) through 115.325(b)(3), 115.326(a), 115.326(a)(2), 115.326(b), 115.326(b)(1), 115.326(b)(2), 115.326(b)(2)(A) through 115.326(b)(2)(I), 115.326(b)(3), 115.326(b)(4), 115.327(a), 115.327(a)(2), 115.327(a)(4), 115.327(a)(5), 115.327(b), 115.327(b)(1), 115.327(b)(1)(A) through 115.327(b)(1)(C), 115.327(b)(2) through 115.327(b)(6), 115.329 introductory paragraph, 115.332 introductory paragraph, 115.333 introductory paragraph, 115.334 introductory paragraph, 115.334(3), 115.334(3)(A), 115.335 introductory paragraph, 115.336 introductory paragraph, 115.337 introductory paragraph, 115.337(2) through 115.337(4), 115.337(4)(E), 115.339 introductory paragraph, 115.342 introductory paragraph, 115.343 introductory paragraph, 115.344 introductory paragraph, 115.345 introductory paragraph, 115.346 introductory paragraph, 115.347 introductory paragraph, 115.347(3), 115.349 introductory paragraph, 115.412(a), 115.412(a)(1)(F)(iv), 115.412(a)(3)(I), 115.412(a)(3)(I)(viii), 115.412(b), 115.412(b)(1), 115.412(b)(1)(A), 115.412(b)(1)(A)(i) through 115.412(b)(1)(A)(iii), 115.412(b)(1)(B) through 115.412(b)(1)(F), 115.412(b)(1)(F)(i) through 115.412(b)(1)(F)(iv), 115.412(b)(2), 115.412(b)(2)(A), 115.412(b)(2)(B), 115.412(b)(2)(B)(i) through 115.412(b)(2)(B)(iii), 115.412(b)(2)(C), 115.412(b)(2)(D), 115.412(b)(2)(D)(i) through 115.412(b)(2)(D)(iv), 115.412(b)(2)(E), 115.412(b)(2)(F), 115.412(b)(2)(F)(i) through 115.412(b)(2)(F)(xiii), 115.412(b)(3), 115.412(b)(3)(A), 115.412(b)(3)(A)(i), 115.412(b)(3)(A)(ii), 115.412(b)(3)(B) through 115.412(b)(3)(I), 115.412(b)(3)(I)(i) through 115.412(b)(3)(I)(viii), 115.413(a), 115.413(a)(1), 115.413(a)(2), 115.413(b), 115.413(b)(1), 115.413(b)(2), 115.415(a), 115.415(a)(1), 115.415(a)(2), 115.415(b), 115.415(b)(1), 115.415(b)(1)(A), 115.415(b)(1)(B), 115.415(b)(2), 115.415(b)(2)(A) through 115.415(b)(2)(E), 115.416(a), 115.416(b), 115.416(b)(1), 115.416(b)(2), 115.417(a), 115.417(a)(1) through 115.417(a)(6), 115.417(b), 115.417(b)(1) through 115.417(b)(6), 115.419(a) through 115.419(b), 115.421(a), 115.421(a)(8), 115.421(a)(8)(A), 115.421(a)(8)(B), 115.421(a)(8)(C), 115.421(a)(9), 115.421(a)(9)(v), 115.421(a)(11), 115.421(b), 115.421(b)(1) through 115.421(b)(9), 115.421(b)(9)(A), 115.421(b)(9)(A)(i) through 115.421(b)(9)(A)(iv), 115.421(b)(9)(B), 115.421(b)(9)(C), 115.421(b)(10), 115.422(a), 115.422(a)(1), 115.422(a)(2), 115.423(a), 115.423(a)(3), 115.423(a)(4), 115.423(b), 115.423(b)(1) through 115.423(b)(4), 115.424(a), 115.424(a)(1) through 115.424(a)(3), 115.424(a)(2), 115.424(b), 115.424(b)(1), 115.424(b)(2), 115.425(a), 115.425(a)(1), 115.425(a)(2), 115.425(a)(3), 115.425(a)(3)(B), 115.425(a)(4)(C)(ii), 115.425(b), 115.424(b)(1), 115.424(b)(1)(A) through 115.425(b)(1)(E), 115.425(b)(2), 115.424(b)(2)(A) through 115.425(b)(2)(E), 115.426(a), 115.426(a)(1), 115.426(a)(1)(C), 115.426(a)(2), 115.426(a)(2)(B), 115.426(a)(3), 115.426(a)(4), 115.426(b), 115.426(b)(1), 115.426(b)(1)(A) through 115.426(b)(1)(D), 115.426(b)(2), 115.426(b)(2)(A), 115.426(b)(2)(A)(i) through 115.426(b)(2)(A)(iv), 115.426(b)(2)(B), 115.426(b)(2)(C), 115.426(b)(3), 115.427(a), 115.427(a)(1), 115.427(a)(2), 115.427(a)(2)(A), 115.427(a)(2)(B), 115.427(a)(3), 115.427(a)(4), 115.427(a)(5), 115.427(a)(5)(A), 115.427(a)(5)(B), 115.426(a)(6), 115.427(b), 115.427(b)(1), 115.427(b)(2), 115.427(b)(2)(A) through 115.427(b)(2)(E), 115.427(b)(3), 115.427(b)(3)(A) through 115.427(b)(3)(C), 115.429(a) through 115.429(c), 115.432(a), 115.432(a)(2), 115.432(a)(3), 115.432(b), 115.432(b)(1) through 115.432(b)(3), 115.432(b)(3)(A) through 115.432(b)(3)(C),

115.433(a), 115.433(b), 115.435(a), 115.435(a)(6), 115.435(a)(7), 115.435(a)(7)(C)(ii), 115.435(a)(8), 115.435(b), 115.435(b)(1) through 115.435(b)(7), 115.436(a), 115.436(a)(1), 115.436(a)(2), 114.436(a)(4) through 115.436(a)(6), 115.436(b), 115.436(b)(1) through 115.436(b)(3), 115.436(b)(3)(A) through 115.436(b)(3)(C), 115.436(b)(4), 115.436(b)(5), 115.437(a), 115.437(a)(1) through 115.437(a)(4), 115.437(b), 115.439(a) through 115.439(c), 115.512 introductory paragraph, 115.512 (1) through 115.512(3), 115.513 introductory paragraph, 115.515 introductory paragraph, 115.516 introductory paragraph, 115.517 introductory paragraph, 115.519(a) through 115.519(b), 115.531(a), 115.531(a)(2), 115.531(a)(3), 115.531(b), 115.531(b)(1) through 115.531(b)(3), 115.532(a), 115.532(a)(4), 115.532(a)(5), 115.532(b), 115.532(b)(1)(A), 115.532(b)(1)(B), 115.532(b)(2), 115.532(b)(3), 115.532(b)(3)(A), 115.532(b)(3)(B), 115.532(b)(4), 115.533(a), 115.533(b), 115.534(a), 115.534(b), 115.534(b)(1), 115.534(b)(2), 115.535(a), 115.535(b), 115.535(b)(1) through 115.535(b)(6), 115.536(a), 115.536(a)(1), 115.536(a)(2), 115.536(a)(3), 115.536(a)(4), 115.536(b), 115.536(b)(1), 115.536(b)(2), 115.536(b)(2)(A), 115.536(b)(2)(A)(i) through 115.536(b)(2)(A)(iii), 115.536(b)(2)(B), 115.536(b)(3), 115.536(b)(3)(A), 115.536(b)(3)(B), 115.536(b)(4), 115.536(b)(5), 115.537(a), 115.537(a)(1) through 115.537(a)(7), 115.537(b), 115.537(b)(1) through 115.537(b)(5), 115.539(a), 115.539(b), 115.612 introductory paragraph, 115.613 introductory paragraph, 115.614 introductory paragraph, 115.615 introductory paragraph, 115.615(1), 115.617 introductory paragraph, 115.617(1), 115.619 introductory paragraph.

(D) Texas Air Control Board Order No. 92–16, as adopted on October 16, 1992.

(E) Revisions to the General Rules, as adopted by the Board on October 16, section 101.1: Introductory paragraph, new definition for extreme performance coating; revised definitions for gasoline bulk plant, paragraph vii of miscellaneous metal parts and products coating, mirror backing coating, volatile organic compound.

(F) Revisions to Regulation V, as adopted by the Board on October 16, 1992, sections 115.010—new definition for extreme performance coating; revised definitions for gasoline bulk plant, paragraph vii of miscellaneous metal parts and products coating, mirror backing coating, and volatile organic compound; 115.116 title (Monitoring and Recordkeeping Requirements), 115.116(a)(2), 115.116(a)(3), 115.116(a)(3)(A) through 115.116(a)(3)(C), 115.116(a)(5), 115.116(b)(2), 115.116(b)(3), 115.116(b)(3)(A) through 115.116(b)(3)(D), 115.116(b)(4), 115.116(b)(5), 115.119(a), 115.119(b), 115.126 title (Monitoring and Recordkeeping Requirements), 115.126(a), 115.126(a)(1)(A), 115.126(a)(1)(C), 115.126(a)(1)(E), 115.126(b), 115.126(b)(1), 115.126(b)(1)(A) through 115.126(b)(1)(E), 115.126(b)(2), 115.126(b)(2)(A) through 115.126(b)(2)(D), 115.126(b)(3), 115.126(b)(3)(A), 115.126(b)(3)(B), 115.127(a)(4)(A) through 115.127(a)(4)(C), 115.129(a), 115.129(a)(1), 115.129(b), 115.136 title (Monitoring and Recordkeeping Requirements), 115.136(a)(4), 115.136(b), 115.136(b)(1), 115.136(b)(2), 115.136(b)(2)(A) through 115.136(b)(2)(D), 115.136(b)(3), 115.136(b)(4), 115.139(a), 115.139(b), 115.211(a), 115.211(b), 115.215(a), 115.215(b), 115.216 title (Monitoring and Recordkeeping Requirements), 115.216(a), 115.216(a)(2)(A) through 115.216(a)(2)(C), 115.216(a)(5), 115.216(b), 115.216(b)(1), 115.216(b)(2), 115.216(b)(2)(A) through 115.216(b)(2)(D), 115.216(b)(3), 115.216(b)(3)(A), 115.216(b)(3)(B), 115.216(b)(4), 115.217(a)(6), 115.219(a)(1) through 115.219(a)(4), 115.219(b), 115.316 title (Monitoring and Recordkeeping Requirements), 115.316(a), 115.316(a)(1)(A), 115.316(a)(1)(C), 115.316(a)(4), 115.316(b), 115.316(b)(1), 115.316(b)(1)(A) through 115.316(b)(1)(D), 115.316(b)(2), 115.316(b)(2)(A) through 115.316(b)(2)(C), 115.316(b)(3), 115.316(b)(4), 115.319(a)(1), 115.319(a)(2), 115.319(b), 115.421(a), 115.421(a)(12), 115.421(a)(12)(A), 115.421(a)(12)(A)(i), 115.421(a)(12)(A)(ii), 115.421(a)(12)(B), 115.425(a)(4)(C)(ii), 115.426 title (Monitoring and Recordkeeping Requirements), 115.426(a)(2), 115.426(a)(2)(A)(i), 115.426(b)(2), 115.426(b)(2)(i), 115.427(a)(5)(C), 115.427(a)(6), 115.427(a)(6)(A) through 115.427(a)(6)(C), 115.427(a)(7), 115.429(d), 115.436 title (Monitoring and Recordkeeping Requirements), 115.436(a)(3),

115.436(a)(3)(C), 115.436(b), 115.436(b)(3), 115.436(b)(3)(B) through 115.436(b)(3)(D), 115.439(d), 115.536 title (Monitoring and Recordkeeping Requirements), 115.536(a)(1), 115.536(a)(2), 115.536(a)(2)(A), 115.536(a)(2)(A)(ii), 115.536(a)(5), 115.536(b)(1), 115.536(b)(2), 115.536(b)(2)(A), 115.536(b)(2)(A)(ii) through 115.536(b)(2)(A)(iv), 115.539(c).

(89) A revision to the Texas State Implementation Plan to adopt an attainment demonstration control strategy for lead which addresses that portion of Collin County owned by GNB.

(i) Incorporation by reference.

(A) Texas Air Control Board Order Number 92–09 issued and effective October 16, 1992, for settlement of the enforcement action against the GNB facility at Frisco, Texas.

(B) Texas Air Control Board Order Number 93–10 issued and effective June 18, 1993, for control of lead emissions from the GNB facility at Frisco, Texas.

(C) Texas Air Control Board Order Number 93–12 issued and effective June 18, 1993, establishing contingency measures relating to the GNB facility at Frisco, Texas.

(ii) Additional material.

(A) The lead attainment demonstration prepared by the State, dated July 1993.

(90) A revision to the Texas SIP regarding ozone monitoring. The State of Texas will modify its SLAMS and its NAMS monitoring systems to include a PAMS network design and establish monitoring sites. The State's SIP revision satisfies 40 CFR 58.20(f) PAMS requirements.

(i) Incorporation by reference.

(A) TNRCC Order Number 93–24 as adopted by the TNRCC November 10, 1993.

(B) SIP narrative plan entitled ''Revisions to the State Implementation Plan (SIP) for the Control of Ozone Air Pollution'' adopted by the TNRCC on November 10, 1993, addressing: 1993 Rate-of-Progress SIP for Dallas/Fort Worth, El Paso, Beaumont/Port Arthur and Houston/Galveston Ozone Nonattainment Areas, Section VI: Control Strategy, B. Ozone Control Strategy, 7. SIP Revisions for 1993 Rate-of-Progress (new.), a. Ozone Control Plan, 1) General, f) Photochemical Assessment Monitoring Stations, page 87, second paragraph, first sentence; third paragraph; fourth paragraph; and, the fifth paragraph which ends on page 88; page 88, first complete paragraph, including numbers (1), (2) and (3).

(ii) Additional material.

(A) The Texas SIP revision narrative regarding PAMS.

(B) TNRCC certification letter dated November 10, 1993, and signed by Gloria A. Vasquez, Chief Clerk, TNRCC.

(91) Revisions to the TNRCC Regulation IV, concerning the Employer Trip Reduction program, were submitted by the Governor on November 13, 1992.

(i) Incorporation by reference.

(A) Revisions to the TNRCC Regulation IV (31 TAC § 114.21, Employer Trip Reduction Program), as adopted by the TACB on October 16, 1992.

(B) TACB Order 92–14 as adopted on October 16, 1992.

(C) SIP narrative entitled, ''Employer Trip Reduction Program, Houston-Galveston Area,'' adopted by the TACB on October 16, 1992, pages 31–38, addressing: 8.c. Quality Assurance Measures; 9. Training and Information Assistance; 11. Enforcement; and 12. Notification of Employers.

(ii) Additional material.

(A) SIP narrative entitled, ''Employer Trip Reduction Program, Houston-Galveston Area,'' adopted by the TACB on October 16, 1992.

(B) The TACB certification letter dated November 10, 1992, signed by William R. Campbell, Executive Director, TACB.

(92)[Reserved]

(93) A revision to the Texas State Implementation Plan (SIP) to include agreed orders limiting sulfur dioxide (SO_2) allowable emissions at certain nonpermitted facilities in Harris County, and to include a modeling demonstration showing attainment of the SO_2 National Ambient Air Quality Standards, was submitted by the Governor by cover letter dated August 3, 1994.

(i) Incorporation by reference.

(A) Texas Natural Resource Conservation Commission (TNRCC) Order No. 94–09, as adopted by the TNRCC on June 29, 1994.

(B) TNRCC Order No. 94–10 for Anchor Glass Container, as adopted by the TNRCC on June 29, 1994.

(C) TNRCC Order No. 94–11 for Crown Central Petroleum Corporation, as adopted by the TNRCC on June 29, 1994.

(D) TNRCC Order No. 94–12 for Elf Atochem North America, Inc., as adopted by the TNRCC on June 29, 1994.

(E) TNRCC Order No. 94–13 for Exxon Company USA, as adopted by the TNRCC on June 29, 1994.

(F) TNRCC Order No. 94–14 for ISK Biosciences Corporation, as adopted by the TNRCC on June 29, 1994.

(G) TNRCC Order No. 94–15 for Lyondell Citgo Refining Company, LTD., as adopted by the TNRCC on June 29, 1994.

(H) TNRCC Order No. 94–16 for Lyondell Petrochemical Company, as adopted by the TNRCC on June 29, 1994.

(I) TNRCC Order No. 94–17 for Merichem Company, as adopted by the TNRCC on June 29, 1994.

(J) TNRCC Order No. 94–18 for Mobil Mining and Minerals Company, as adopted by the TNRCC on June 29, 1994.

(K) TNRCC Order No. 94–19 for Phibro Energy USA, Inc., as adopted by the TNRCC on June 29, 1994.

(L) TNRCC Order No. 94–20 for Shell Chemical and Shell Oil, as adopted by the TNRCC on June 29, 1994.

(M) TNRCC Order No. 94–21 for Shell Oil Company, as adopted by the TNRCC on June 29, 1994.

(N) TNRCC Order No. 94–22 for Simpson Pasadena Paper Company, as adopted by the TNRCC on June 29, 1994.

(ii) Additional material.

(A) May 27, 1994, letter from Mr. Norman D. Radford, Jr. to the TNRCC and the EPA Region 6 requesting approval of an equivalent method of monitoring sulfur in fuel and an equivalent method of determining compliance.

(B) June 28, 1994, letter from Anthony C. Grigsby, Executive Director, TNRCC, to Crown Central Petroleum Corporation, approving an alternate monitoring and compliance demonstration method.

(C) June 28, 1994, letter from Anthony C. Grigsby, Executive Director, TNRCC, to Exxon Company USA, approving an alternate monitoring and compliance demonstration method.

(D) June 28, 1994, letter from Anthony C. Grigsby, Executive Director, TNRCC, to Lyondell Citgo Refining Co., LTD., approving an alternate monitoring and compliance demonstration method.

(E) June 28, 1994, letter from Anthony C. Grigsby, Executive Director, TNRCC, to Phibro Energy, USA, Inc., approving an alternate monitoring and compliance demonstration method.

(F) June 28, 1994, letter from Anthony C. Grigsby, Executive Director, TNRCC, to Shell Oil Company, approving an alternate monitoring and compliance demonstration method.

(G) June 8, 1994, letter from Mr. S. E. Pierce, Mobil Mining and Minerals Company, to the TNRCC requesting approval of an alternative quality assurance program.

(H) June 28, 1994, letter from Anthony C. Grigsby, Executive Director, TNRCC, to Mobil Mining and Minerals Company, approving an alternative quality assurance program.

(I) August 3, 1994, narrative plan addressing the Harris County Agreed Orders for SO_2, including emission inventories and modeling analyses (i.e. the April 16, 1993, report entitled ''Evaluation of Potential 24-hour SO_2 Nonattainment Area in Harris County, Texas–Phase II'' and the June, 1994, addendum).

(J) TNRCC certification letter dated June 29, 1994, and signed by Gloria Vasquez, Chief Clerk, TNRCC.

(94) Revisions to the Texas SIP addressing visible emissions requirements were submitted by the Governor of Texas by letters dated August 21, 1989, January 29, 1991, October 15, 1992 and August 4, 1993.

(i) Incorporation by reference.

(A) Revisions to Texas Air Control Board (TACB), Regulation I, Section 111.111, ''Requirements for Specified Sources;'' Subsection 111.111(a) (first paragraph) under ''Visible Emissions;'' Subsections 111.111(a)(1) (first paragraph), 111.111(a)(1)(A), 111.111(a)(1)(B) and 111.111(a)(1)(E) under ''Stationary Vents;'' Subsection 111.111(b) (first paragraph) under ''Compliance Determination Exclusions;'' and Subsections 111.113 (first paragraph), 111.113(1), 111.113(2), and 111.113(3) under ''Alternate Opacity Limitations,'' as adopted by the TACB on June 16, 1989.

(B) TACB Board Order No. 89–03, as adopted by the TACB on June 16, 1989.

(C) Revisions to Texas Air Control Board (TACB), Regulation I, Section 111.111, ''Requirements for Specified Sources;'' Subsections 111.111(a)(4)(A) and 111.111(a)(4)(B)(i) under ''Railroad Locomotives or Ships;'' Subsections 111.111(a)(5)(A) and 111.111(a)(5)(B)(i) under ''Structures;'' and Subsections 111.111(a)(6)(A) and 111.111(a)(6)(B)(i) under ''Other Sources,'' as adopted by the TACB on October 12, 1990.

(D) TACB Board Order No. 90–12, as adopted by the TACB on October 12, 1990.

(E) Revisions to Texas Air Control Board (TACB), Regulation I, Section 111.111, ''Requirements for Specified Sources;'' Subsections 111.111(a)(1)(C), 111.111(a)(1)(D), 111.111(a)(1)(F) (first paragraph), 111.111(a)(1)(F)(i), 111.111(a)(1)(F)(ii), 111.111(a)(1)(F)(iii), 111.111(a)(1)(F)(iv), and 111.111(a)(1)(G) under ''Stationary Vents;'' Subsections 111.111(a)(2) (first paragraph), 111.111(a)(2)(A), 111.111(a)(2)(B), and 111.111(a)(2)(C) under ''Sources Requiring Continuous Emissions Monitoring;'' Subsection 111.111(a)(3) (first paragraph) under ''Exemptions from Continuous Emissions Monitoring Requirements;'' Subsection 111.111(a)(4), ''Gas Flares,'' title only; Subsection 111.111(a)(5) (first paragraph) under ''Motor Vehicles;'' Subsections 111.111(a)(6)(A), 111.111(a)(6)(B) (first paragraph), 111.111(a)(6)(B)(i) and 111.111(a)(6)(B)(ii) under ''Railroad Locomotives or Ships'' (Important note, the language for 111.111(a)(6)(A) and 111.111(a)(6)(B)(i) was formerly adopted as 111.111(a)(4)(A) and 111.111(a)(4)(B)(i) on October 12, 1990); Subsections 111.111(a)(7)(A), 111.111(a)(7)(B) (first paragraph), 111.111(a)(7)(B)(i) and 111.111(a)(7)(B)(ii) under ''Structures'' (Important note, the language for 111.111(a)(7)(A) and 111.111(a)(7)(B)(i) was formerly adopted as 111.111(a)(5)(A) and 111.111(a)(5)(B)(i) on October 12, 1990); and Subsections 111.111(a)(8)(A), 111.111(a)(8)(B) (first paragraph), 111.111(a)(8)(B)(i) and 111.111(a)(8)(B)(ii) under ''Other Sources'' (Important note, the language for 111.111(a)(8)(A) and 111.111(a)(8)(B)(i) was formerly adopted as 111.111(a)(6)(A) and 111.111(a)(6)(B)(i) on October 12, 1990), as adopted by the TACB on September 18, 1992.

(F) TACB Board Order No. 92–19, as adopted by the TACB on September 18, 1992.

(G) Revisions to Texas Air Control Board (TACB), Regulation I, Section 111.111, ''Requirements for Specified Sources;'' Subsections 111.111(a)(4)(A) (first paragraph), 111.111(a)(4)(A)(i), 111.111(a)(4)(A)(ii), and 111.111(a)(4)(B) under ''Gas Flares,'' as adopted by the TACB on June 18, 1993.

(H) TACB Board Order No. 93–06, as adopted by the TACB on June 18, 1993.

(ii) Additional material.

(A) TACB certification letter dated July 27, 1989, and signed by Allen Eli Bell, Executive Director, TACB.

(B) TACB certification letter dated January 9, 1991, and signed by Steve Spaw, Executive Director, TACB.

(C) TACB certification letter dated October 1, 1992, and signed by William Campbell, Executive Director, TACB.

(D) TACB certification letter dated July 13, 1993, and signed by William Campbell, Executive Director, TACB.

(95) Alternative emission reduction (bubble) plan for the Shell Oil Company's Deer Park manufacturing complex submitted to the EPA by the Governor of Texas in a letter dated July 26, 1993.

(i) Incorporation by reference.

(A) TACB Order 93–11, as adopted by the TACB on June 18, 1993.

(B) SIP narrative entitled, ''Site-Specific State Implementation Plan,'' section IV.H.1.b., attachment (4), entitled, ''Alternate Emission Reduction (''Bubble'') Plan Provisions for Uncontrolled Vacuum-Producing Vents, Shell Oil Company, Deer Park Manufacturing Complex, HG–0659–W,'' adopted by the TACB on June 18, 1993.

(ii) Additional material.

(A) SIP narrative entitled, ''Site-Specific State Implementation Plan,'' section IV.H.1.b., adopted by the TACB on June 18, 1993.

(B) TACB certification letter dated July 5, 1993, and signed by William R. Campbell, Executive Director, TACB.

(96) A revision to the Texas State Implementation Plan for Transportation Conformity: Regulation 30 TAC Chapter 114 ''Control of Air Pollution from Motor Vehicles'', Section 114.27

''Transportation Conformity'' as adopted by the Texas Natural Resource Conservation Commission (TNRCC) on October 19, 1994, was submitted by the Governor on November 6, 1994. No action is taken on a portion of 30 TAC 114.27(c) that contains provisions of 40 CFR 51.448.

(i) Incorporation by reference.

(A) The TNRRC 30 TAC Chapter 114 ''Control of Air Pollution from Motor Vehicles'', 114.27 ''Transportation Conformity'' as adopted by the TNRCC on October 19, 1994. No action is taken on a portion of 30 TAC 114.27(c) that contains provisions of 40 CFR 51.448.

(B) TNRCC order No. 94–40 as passed and approved on October 12, 1994.

(ii) Additional material. None.

(97) Revisions to the Texas SIP addressing revisions to the Texas Air Control Board (TACB) General Rules, 31 Texas Administrative Code (TAC) Chapter 101, ''General Rules'', section 101.1, ''Definitions'', and revisions to TACB Regulation VI, 31 TAC Chapter 116, ''Control of Air Pollution by Permits for New Construction or Modification,'' were submitted by the Governor of Texas by letters dated December 11, 1985, October 26, 1987, February 18, 1988, September 29, 1988, December 1, 1989, September 18, 1990, November 5, 1991, May 13, 1992, November 13, 1992, and August 31, 1993.

(i) Incorporation by reference.

(A) Revisions to TACB Regulation VI, 31 TAC Chapter 116, sections 116.2 and 116.10(a)(4), as adopted by the TACB on July 26, 1985.

(B) TACB Board Order No. 85–07, as adopted by the TACB on July 26, 1985.

(C) Amended TACB Regulation VI, 31 TAC Chapter 116, section 116.10(a)(3) as adopted by the TACB on July 17, 1987.

(D) TACB Board Order No. 87–09, as adopted by the TACB on July 17, 1987.

(E) Amended TACB Regulation VI, 31 TAC Chapter 116, sections 116.10(a)(1), 116.10(c)(1), 116.10(c)(1)(A), 116.10(c)(1)(B), 116.10(c)(1)(C) and 116.10(f), as adopted by the TACB on December 18, 1987.

(F) TACB Board Order No. 87–17, as adopted by the TACB on December 18, 1987.

(G) Amended TACB Regulation VI, 31 TAC Chapter 116, redesignation of section 116.1 to 116.1(a), revision to section 116.1(b), and redesignation of 116.10(a)(6) to 116.10(a)(7), as adopted by the TACB on July 15, 1988.

(H) TACB Board Order No. 88–08, as adopted by the TACB on July 15, 1988.

(I) Amended TACB Regulation VI, 31 TAC Chapter 116, sections 116.1(a), 116.3(f), 116.5, 116.10(a)(7), 116.10(b)(1), 116.10(d), 116.10(e), 116.11(b)(3), 116.11(e), and 116.11(f), as adopted by the TACB on August 11, 1989.

(J) TACB Board Order No. 89–06, as adopted by the TACB on August 11, 1989.

(K) Amended TACB Regulation VI, 31 TAC Chapter 116, sections 116.1(c), 116.3(a)(1), 116.3(a)(1)(A), and 116.3(a)(1)(B), as adopted by the TACB on May 18, 1990.

(L) TACB Board Order No. 90–05, as adopted by the TACB on May 18, 1990.

(M) Amended TACB Regulation VI, 31 TAC Chapter 116, section 116.1(a)(15), as adopted by the TACB on September 20, 1991.

(N) TACB Board Order No. 91–10, as adopted by the TACB on September 20, 1991.

(O) Revisions to TACB General Rules, 31 TAC Chapter 101 to add definitions of ''actual emissions''; ''allowable emissions''; ''begin actual construction''; ''building, structure, facility, or installation''; ''commence''; ''construction''; ''de minimis threshold''; ''emissions unit''; ''federally enforceable''; ''necessary preconstruction approvals or permits''; ''net emissions increase''; ''nonattainment area''; ''reconstruction''; ''secondary emissions''; and ''synthetic organic chemical manufacturing process'' and to modify definitions of ''fugitive emission''; ''major facility/stationary source''; and ''major modification'' (except for Table I), as adopted by the TACB on May 8, 1992.

(P) Amended TACB Regulation VI, 31 TAC Chapter 116, sections 116.3(a)(1), (3), (4), (5), (7), (8), (9), (10), (11), (12), and (13); 116.3(c)(1); and 116.11(b)(4), as adopted by the TACB on May 8, 1992.

(Q) TACB Board Order No. 92–06, as adopted by the TACB on May 8, 1992.

(R) Amended TACB Regulation VI, 31 TAC Chapter 116, sections 116.3(a); 116.3(a)(7) and (10); 116.3(c); and 116.14 as, adopted by the TACB on October 16, 1992.

(S) TACB Board Order No. 92–18, adopted by the TACB on October 16, 1992.

(T) Amended TACB Regulation VI, 31 TAC Chapter 116, Table I, as adopted in section 116.012 by the TACB on August 16, 1993, is approved and incorporated into section 101.1 in lieu of Table I adopted May 8, 1992.

(U) TACB Board Order No. 93–17, as adopted by the TACB on August 16, 1993

(ii) Additional materials—None.

[37 FR 10895, May 31, 1972]

EDITORIAL NOTE: For FEDERAL REGISTER citations affecting § 52.2270, see the List of CFR Sections Affected in the Finding Aids section of this volume.

§ 52.2271 Classification of regions.

(a) The Texas plan was evaluated on the basis of the following classifications:

Air quality control region	Pollutant				
	Particulate matter	Sulfur oxides	Nitrogen dioxide	Carbon monoxide	Ozone
Abilene-Wichita Falls Intrastate	II	III	III	III	III
Amarillo-Lubbock Intrastate	II	III	III	III	III
Austin-Waco Intrastate	II	III	III	III	I
Brownsville-Laredo Intrastate	I	III	III	III	III
Corpus Christi-Victoria Intrastate	I	II	III	III	I
Midland-Odessa-San Angelo Intrastate	II	II	III	III	III
Metropolitan Houston-Galveston Intrastate	I	I	III	III	I
Metropolitan Dallas-Fort Worth Intrastate	II	III	III	III	I
Metropolitan San Antonio Intrastate	II	III	III	III	I
Southern Louisiana-Southeast Texas Interstate	II	I	III	III	I
El Paso-Las Cruces Alamogordo Interstate	I	IA	III	I	I
Shreveport-Texarkana-Tyler Interstate	II	III	III	III	III

(b) The proposed priority classifications for particulate matter and carbon monoxide submitted by the Governor on March 21, 1975 are disapproved.

(c) The revision of section II, classification of regions, submitted by the Texas Air Control Board with the semiannual in 1975 is disapproved.

[37 FR 10895, May 31, 1972, as amended at 39 FR 16347, May 8, 1974; 42 FR 20131, Apr. 18, 1977; 42 FR 27894, June 1, 1977; 45 FR 19244, Mar. 25, 1980]

§ 52.2272 [Reserved]

§ 52.2273 Approval status.

With the exceptions set forth in this subpart, the Administrator approves Texas' plan for the attainment and maintenance of the national standards under section 110 of the Clean Air Act. Furthermore, the Administrator finds that the plan satisfies all requirements of Part D, Title 1, of the Clean Air Act as amended in 1977, except as noted below.

[45 FR 19244, Mar. 25, 1980, as amended at 49 FR 32190, Aug. 13, 1984; 61 FR 16062, Apr. 11, 1996]

§ 52.2274 General requirements.

(a) The requirements of § 51.116(c) of this chapter are not met since the legal authority to provide for public availability of emission data is inadequate.

[39 FR 34537, Sept. 26, 1974, as amended at 51 FR 40676, Nov. 7, 1986]

§ 52.2275 Control strategy and regulations: Ozone.

(a) Section 510.3 of revised Regulation V, which was submitted by the Governor on July 20, 1977, is disapproved.

(b) Notwithstanding any provisions to the contrary in the Texas Implementation Plan, the control measures listed in paragraph (d) of this section shall be implemented in accordance with the schedule set forth below.

(c)(1) Removal from service of a 12,000 BPD vacuum distillation unit at the Corpus Christi refinery of the Champlin Petroleum Company, Corpus Christi, Texas, with a final compliance date no later than October 1, 1979. This shall result in an estimated hydrocarbon emission reduction of at least 139 tons per year.

(2) Dedication of gasoline storage tank 91–TK–3 located at the Corpus Christi refinery of the Champlin Petroleum Company, Corpus Christi, Texas to the exclusive storage of No. 2 Fuel Oil or any fluid with a vapor pressure equivalent to, or less than that of No. 2 Fuel Oil, with a final compliance date no later than October 1, 1979. This shall result in an estimated hydrocarbon emission reduction of at least 107.6 tons per year.

(d) [Reserved]

(e) Approval—The Texas Natural Resource Conservation Commission (TNRCC) submitted an ozone redesignation request and maintenance plan on July 27, 1994, requesting that the Victoria County ozone nonattainment area be redesignated to attainment for ozone. Both the redesignation request and maintenance plan were adopted by TNRCC in Commission Order No. 94–29 on July 27, 1994. The redesignation request and maintenance plan meet the redesignation requirements in section 107(d)(3)(E) of the Act as amended in 1990. The redesignation meets the Federal requirements of section 182(a)(1) of the Clean Air Act as a revision to the Texas Ozone State Implementation Plan for Victoria County. The EPA approved the request for redesignation to attainment with respect to ozone for Victoria County on May 8, 1995.

[42 FR 37380, July 21, 1977, as amended at 44 FR 5662, Jan. 29, 1979; 44 FR 55006, Sept. 24, 1979; 45 FR 19244, Mar. 25, 1980; 46 FR 47545, Sept. 29, 1981; 47 FR 20770, May 14, 1982; 47 FR 50868, Nov. 10, 1982; 60 FR 12459, Mar. 7, 1995; 60 FR 33924, June 29, 1995]

§ 52.2276 Control strategy and regulations: Particulate matter.

(a) *Part D conditional approval.* The Texas plan for total suspended particulate (TSP) for the nonattainment area of Dallas 3 is conditionally approved until the State satisfactorily completes the following items:

(1) Draft SIP revision supplement submitted to EPA by March 3, 1980.

(2) Public hearing completed by May 5, 1980.

(3) Adopt revision and revised Regulation I as it pertains to control of nontraditional sources, if necessary, and submit to EPA by August 1, 1980.

(b) Notwithstanding any provisions to the contrary in the Texas Implementation Plan, the control measures listed in paragraph (c) of this section shall be implemented in accordance with the schedule set forth below.

(c) No later than January 1, 1980, Parker Brothers and Co., Inc., at its limestone quarry facilities near New Braunfels, Comal County, Texas shall install fabric filters on the primary crusher and on the secondary crusher and screens, meeting the requirements of Appendix A of the Texas Air Control Board Order 78–8 adopted August 11, 1978. After the date of installation of the fabric filters, Parker Brothers and Co., Inc., shall not emit particulate matter in excess of 0.03 grains per standard cubic foot from the exhaust stack of the fabric filter on its primary crusher and shall not emit particulate matter in excess of 0.03 grains per standard cubic foot from the exhaust stack of the fabric filter on its secondary crusher and screens.

[46 FR 43425, Aug. 28, 1981, and 46 FR 47545, Sept. 29, 1981]

§§ 52.2277—52.2281 [Reserved]

§ 52.2282 Public hearings.

(a) The requirements of § 51.102 of this chapter are not met because principal portions of the revised plan were not made available to the public for inspection and comment prior to the hearing.

[38 FR 16568, June 22, 1973, as amended at 51 FR 40675, Nov. 7, 1986]

§§ 52.2283—52.2284 [Reserved]

§ 52.2285 Control of evaporative losses from the filling of gasoline storage vessels in the Houston and San Antonio areas.

(a) Definitions:

(1) *Gasoline* means any petroleum distillate having a Reid vapor pressure of 4 pounds or greater which is produced for use as a motor fuel and is commonly called gasoline.

(2) *Storage container* means any stationary vessel of more than 1,000 gallons (3,785 liters) nominal capacity. Stationary vessels include portable vessels placed temporarily at a location; e.g., tanks on skids.

(3) *Owner* means the owner of the gasoline storage container(s).

(4) *Operator* means the person who is directly responsible for the operation of the gasoline storage container(s), whether the person be a lessee or an agent of the owner.

(5) *Delivery Vessel* means tank trucks and tank trailers used for the delivery of gasoline.

(6) *Source* means both storage containers and delivery vessels.

(b) This section is applicable to the following counties in Texas: Harris, Galveston, Brazoria, Fort Bend, Waller, Montgomery, Liberty, Chambers, Matagorda, Bexar, Comal, and Guadalupe.

(c) No person shall transfer or permit the transfer of gasoline from any delivery vessel into any stationary storage container with a nominal capacity greater than 1,000 gallons (3,785 liters) unless such container is equipped with a submerged fill pipe and unless the displaced vapors from the storage container are processed by a system that prevents release to the atmosphere of no less than 90 percent by weight of total hydrocarbon compounds in said vapors.

(1) The vapor recovery system shall include one or more of the following:

(i) A vapor-tight return line from the storage container to the delivery vessel and a system that will ensure that the vapor return line is connected before gasoline can be transferred into the container.

(ii) Other equipment that prevents release to the atmosphere of no less than 90 percent by weight of the total hydrocarbon compounds in the displaced vapor provided that approval of the proposed design, installation, and operation is obtained from the Regional Administrator prior to start of construction.

(2) The vapor recovery system shall be so constructed that it will be compatible with a vapor recovery system, which may be installed later, to recover vapors displaced by the filling of motor vehicle tanks.

(3) The vapor-laden delivery vessel shall meet the following requirements:

(i) The delivery vessel must be so designed and maintained as to be vapor-tight at all times.

(ii) If any gasoline storage compartment of a vapor-laden delivery vessel is refilled in one of the counties listed in paragraph (b) of this section, it shall be refilled only at a facility which is equipped with a vapor recovery system, or the equivalent, which prevents release to the atmosphere of at least 90 percent by weight of the total hydrocarbon compounds in the vapor displaced from the delivery vessel during refilling.

(iii) Gasoline storage compartments of one thousand gallons or less in gasoline delivery vehicles presently in use on November 6, 1973 will not be required to be retrofitted with a vapor return system until January 1, 1977.

(iv) Facilities which have a daily throughput of 20,000 gallons of gasoline or less are required to have a vapor recovery system in operation no later than May 31, 1977. Delivery vessels and storage vessels served exclusively by facilities required to have a vapor recovery system in operation no later than May 31, 1977, also are required to meet the provisions of this section no later than May 31, 1977.

(d) The provisions of paragraph (c) of this section shall not apply to the following:

(1) Storage containers used for the storage of gasoline *used on a farm for farming purposes*, as that expression is used in the Internal Revenue Code, 26 U.S.C. section 6420.

(2) Any container having a nominal capacity less than 2,000 gallons (7,571 liters) installed prior to November 6, 1973.

(3) Transfers made to storage containers equipped with floating roofs or their equivalent.

(4) Any facility for loading and unloading of volatile organic compounds (including gasoline bulk terminals) in Bexar, Brazoria, Galveston and Harris Counties, any gasoline bulk plants in Harris County, and any filling of gasoline storage vessels (Stage I) for motor vehicle fuel dispensing facilities in Bexar, Brazoria, Galveston, and Harris Counties which is subject to Texas Air Control Board Regulation V subsections 115.111–115.113, 115.121–115.123, and 115.131–115.135, respectively.

(e) Except as provided in paragraph (f) of this section, the owner or operator of a source subject to paragraph (c) of this section shall comply with the increments contained in the following compliance schedule:

(1) Contracts for emission control systems or process modifications must be awarded or orders must be issued for the purchase of component parts to accomplish emission control or process modification not later than March 31, 1975.

(2) Initiation of onsite construction or installation of emission control equipment or process change must begin not later than July 1, 1975.

(3) On-site construction or installation of emission control equipment or process modification must be completed no later than June 30, 1976.

(4) Final compliance is to be achieved no later than August 31, 1976.

(5) Any owner or operator of sources subject to the compliance schedule in this paragraph shall certify in writing to the Regional Administrator whether or not the required increment of progress has been met. The certification shall be submitted within five days after the deadlines for each increment. The certification shall include the name(s) and street address(es) of the facility (facilities) for which the certification applies, and the date(s) the increment(s) of progress was (were) met—if met. The Regional Administrator may request whatever supporting information he considers necessary for proper certification.

(f) Paragraph (e) of this section shall not apply to the owner or operator of:

(1) A source which is presently in compliance with paragraph (c) of this section and which has certified such compliance to the Regional Administrator by January 1, 1974. The certification shall include the name(s) and street address(es) of the facility (facilities) for which the certification applies. The Regional Administrator may request whatever supporting information he considers necessary for proper certification.

(2) To a source for which a compliance schedule is adopted by the State and approved by the Administrator.

(3) To a source whose owner or operator receives approval from the Administrator by June 1, 1974, of a proposed alternative schedule. No such schedule may provide for compliance after August 31, 1976. If approval is promulgated by the Administrator, such schedule shall satisfy the requirements of this section for the affected source.

(g) Nothing in this section shall preclude the Administrator from promulgating a separate schedule for any source to which the application of the compliance schedule in paragraph (e) of this section fails to satisfy the requirements of §§51.261 and 51.262(a) of this chapter.

(h) After August 31, 1976 paragraph (c) of this section shall be applicable to every storage container (except those exempted in paragraph (d) of this section) located in the counties specified in paragraph (b) of this section. Every storage container installed after August 31, 1976 shall comply with the requirements of paragraph (c) of this section from the time of installation. In the affected counties, storage containers which were installed, or converted to gasoline storage after November 6, 1973, but before August 31, 1976 shall comply with paragraph (c) of this section in accordance with the schedule established in paragraph (e) of this section.

[42 FR 37380, July 21, 1977, as amended at 47 FR 50868, Nov. 10, 1982; 51 FR 40676, Nov. 7, 1986]

§ 52.2286 Control of evaporative losses from the filling of gasoline storage vessels in the Dallas-Fort Worth area.

(a) Definitions:

(1) *Gasoline* means any petroleum distillate having a Reid vapor pressure of 4 pounds or greater which is produced for use as a motor fuel and is commonly called gasoline.

(2) *Storage container* means any stationary vessel of more than 1,000 gallons (3,785 liters) nominal capacity. Stationary vessels include portable vessels placed temporarily at a location; e.g., tanks on skids.

(3) *Owner* means the owner of the gasoline storage container(s).

(4) *Operator* means the person who is directly responsible for the operation of the gasoline storage container(s),

whether the person be a lessee or an agent of the owner.

(5) *Delivery Vessel* means tank truck and tank trailers used for the delivery of gasoline.

(6) *Source* means both storage containers and delivery vessels.

(b) This section is applicable to the following counties in Texas: Dallas, Tarrant, Denton, Wise, Collin, Parker, Rockwall, Kaufman, Hood, Johnson, and Ellis.

(c) No person shall transfer or permit the transfer of gasoline from any delivery vessel into any stationary storage container with a nominal capacity greater than 1,000 gallons (3,785 liters) unless such container is equipped with a submerged fill pipe and unless the displaced vapors from the storage container are processed by a system that prevents release to the atmosphere of no less than 90 percent by weight of total hydrocarbon compounds in said vapors.

(1) The vapor recovery system shall include one or more of the following:

(i) A vapor-tight return line from the storage container to the delivery vessel and a system that will ensure that the vapor return line is connected before gasoline can be transferred into the container.

(ii) Other equipment that prevents release to the atmosphere of no less than 90 percent by weight of the total hydrocarbon compounds in the displaced vapor provided that approval of the proposed design, installation, and operation is obtained from the Regional Administrator prior to start of construction.

(2) The vapor recovery system shall be so constructed that it will be compatible with a vapor recovery system, which may be installed later, to recover vapors displaced by the filling of motor vehicle tanks.

(3) The vapor-laden delivery vessel shall meet the following requirements:

(i) The delivery vessel must be so designed and maintained as to be vapor-tight at all times.

(ii) If any gasoline storage compartment of a vapor-laden delivery vessel is refilled in one of the counties listed in paragraph (b) of this section, it shall be refilled only at a facility which is equipped with a vapor recovery system, or the equivalent, which prevents release to the atmosphere of at least 90 percent by weight of the total hydrocarbon compounds in the vapor displaced from the delivery vessel during refilling.

(d) The provisions of paragraph (c) of this section shall not apply to the following:

(1) Storage containers used for the storage of gasoline *used on a farm for farming purposes*, as that expression is used in the Internal Revenue Code, 26 U.S.C. section 6420.

(2) Any container having a nominal capacity less than 2,000 gallons (7,571 liters) installed prior to promulgation of this section.

(3) Transfers made to storage containers equipped with floating roofs or their equivalent.

(4) Any facility for loading and unloading of volatile organic compounds (including gasoline bulk terminals) in Dallas or Tarrant County, and any filling of gasoline storage vessels (Stage I) for motor vehicle fuel dispensing facilities in Dallas or Tarrant County which is subject to Texas Air Control Board Regulation V subsections 115.111–115.113 and 115.131–115.135, respectively.

(e) Except as provided in paragraph (f) of this section, the owner or operator of a source subject to paragraph (c) of this section shall comply with the increments contained in the following compliance schedule:

(1) Contracts for emission control systems or process modifications must be awarded or orders must be issued for the purchase of component parts to accomplish emission control or process modification no later than September 30, 1977.

(2) Initiation of on-site construction or installation of emission control equipment or process modification must begin no later than January 31, 1978.

(3) On-site construction or installation of emission control equipment or process modification must be completed no later than August 31, 1978.

(4) Final compliance is to be achieved no later than September 30, 1978.

(5) Any owner or operator of sources subject to the compliance schedule in this paragraph shall certify in writing to the Regional Administrator whether

or not the required increment of progress has been met. The certification shall be submitted not later than February 15, 1978, for award of contracts and initiation of construction, and not later than October 15, 1978, for completion of construction and final compliance. The certification shall include the name(s) and street address(es) of the facility (facilities) for which the certification applies, and the date(s) the increment(s) of progress was (were) met—if met. The Regional Administrator may request whatever supporting information he considers necessary for proper certification.

(f) Paragraph (e) of this section shall not apply to the owner or operator of:

(1) A source which is presently in compliance with paragraph (c) of this section and which has certified such compliance to the Regional Administrator by August 1, 1977. The certification shall include the name(s) and street address(es) of the facility (facilities) for which the certification applies. The Regional Administrator may request whatever supporting information he considers necessary for proper certification.

(2) A source for which a compliance schedule is adopted by the State and approved by the Administrator.

(3) To a source whose owner or operator receives approval from the Administrator by August 1, 1977, of a proposed alternative schedule. No such schedule may provide for compliance after September 30, 1978. If approval is promulgated by the Administrator, such schedule shall satisfy the requirements of this section for the affected source.

(g) Nothing in this section shall preclude the Administrator from promulgating a separate schedule for any source to which the application of the compliance schedule in paragraph (e) of this section fails to satisfy the requirements of §51.15 (b) and (c) of this chapter.

(h) After September 30, 1978, paragraph (c) of this section shall be applicable to every storage container (except those exempted in paragraph (d) of this section) located in the counties specified in paragraph (b). Every storage container installed after September 30, 1978 shall comply with the requirements of paragraph (c) of this section from the time of installation. In the affected counties, storage containers which were installed, or coverted to gasoline storage after promulgation of this section, but before September 30, 1978 shall comply with paragraph (c) of this section in accordance with the schedule established in paragraph (e).

[42 FR 37381, July 21, 1977, as amended at 47 FR 50868, Nov. 10, 1982]

§§52.2287—52.2300 [Reserved]

§52.2301 Federal compliance date for automobile and light-duty truck coating. Texas Air Control Board Regulation V (31 TAC chapter 115), control of air pollution from volatile organic compound, rule 115.191(1)(8)(A).

(a) The requirements of section 110 of the Clean Air Act are not met regarding the final compliance date, as found in TACB rule 115.191(a)(8)(A), for the requirements of TACB Rule 115.191(a)(8)(A).

(b) TACB adopted revisions to rule 115.191(a)(8)(A) on October 14, 1988, and submitted them to EPA on December 13, 1988. Prior to the submittal, automobile and light-duty truck coating operations were to have complied with final control limits of §A115.191(a)(8)(B) of the federally approved State Implementation Plan (SIP), by December 31, 1986. In the December 13, 1988, submittal, the final control limits had been moved to §115.191(a)(8)(A) and had been given a new extended compliance date of December 31, 1987. EPA does not recognize the later compliance data and retains the original compliance date for the final emission limits of December 31, 1986. The owner or operator of an automobile and light-duty truck coating operation shall comply with the requirements of TACB rule 115.191(a)(8)(A) no later than December 31, 1986.

[56 FR 40257, Aug. 14, 1991]

§52.2302 [Reserved]

§52.2303 Significant deterioration of air quality.

(a) The plan submitted by the Governor of Texas on December 11, 1985 (as adopted by the TACB on July 26, 1985), October 26, 1987 (as revised by the

TACB on July 17, 1987), September 29, 1988 (as revised by the TACB on July 15, 1988), and February 18, 1991 (as revised by the TACB on December 14, 1990) containing Regulation VI—Control of Air Pollution for New Construction or Modification, Section 116.3(a)(13); the Prevention of Significant Deterioration (PSD) Supplement document, submitted by the Governor on October 26, 1987 (as adopted by the TACB on July 17, 1987); and revision to General Rules, Rule 101.20(3), submitted by the Governor on December 11, 1985 (as adopted by the TACB on July 26, 1985), is approved as meeting the requirements of part C, Clean Air Act for preventing significant deterioration of air quality.

(b) The plan approval is partially based on commitment letters provided by the Executive Director of the Texas Air Control Board, dated September 5, 1989 and April 17, 1992.

(c) The requirements of section 160 through 165 of the Clean Air Act are not met for Federally-designated Indian lands. Therefore, the provisions of § 52.21 (b) through (w) are hereby adopted and made a part of the applicable implementation plan and are applicable to sources located on land under the control of Indian governing bodies.

(d) The requirements of section 160 through 165 of the Clean Air Act are not met for new major sources or major modifications to existing stationary sources for which applicability determinations would be affected by dockside emissions of vessels. Therefore, the provisions of § 52.21 (b) through (w) are hereby adopted and made a part of the applicable implementation plan and are applicable to such sources.

[57 FR 28098, June 24, 1992, as amended at 59 FR 46557, Sept. 9, 1994]

§ 52.2304 Visibility protection.

(a) The requirements of section 169A of the Clean Air Act are not met, because the plan does not include approvable procedures for protection of visibility in mandatory Class I Federal areas.

(b) Regulation for visibility monitoring. The provisions of § 52.26 are hereby incorporated and made a part of the applicable plan for the State of Texas.

[50 FR 28553, July 12, 1985, as amended at 52 FR 45137, Nov. 24, 1987; 54 FR 7770, Feb. 23, 1989]

§ 52.2305 [Reserved]

§ 52.2306 Particulate Matter (PM_{10}) Group II SIP commitments.

On July 18, 1988, the Governor of Texas submitted a revision to the State Implementation Plan (SIP) that contained commitments for implementing all of the required activities including monitoring, reporting, emission inventory, and other tasks that may be necessary to satisfy the requirements of the PM_{10} Group II SIPs. The Texas Air Control Board adopted these revisions on May 13, 1988. The State of Texas has committed to comply with the PM_{10} Group II SIP requirements, as articulated in the FEDERAL REGISTER notice of July 1, 1987 (52 FR 24670), for the defined areas of Dallas, Harris, Lubbock, and Nueces counties as provided in the Texas PM_{10} Group II SIPs. In addition to the SIP, a letter from the Governor of Texas, dated July 18, 1988, stated that:

> * * * In the July 1, 1987 issue of the FEDERAL REGISTER, the U.S. Environmental Protection Agency announced the requirement that each state submit a committal SIP for PM_{10} Group II areas instead of full control strategies. States were also required to submit demonstrations of attainment and maintenance of the PM_{10} National Ambient Air Quality Standards. The TACB is committed to carrying out the activities contained in the enclosed proposed SIP to satisfy those requirements * * *.

[54 FR 25586, June 16, 1989]

§ 52.2307 Small business assistance program.

The Governor of Texas submitted on November 13, 1992 a plan revision to develop and implement a Small Business Stationary Source Technical and Environmental Compliance Assistance Program to meet the requirements of section 507 of the Clean Air Act by November 15, 1994. The plan commits to provide technical and compliance assistance to small businesses, hire an Ombudsman to serve as an independent advocate for small businesses, and establish a Compliance Advisory Panel to

advise the program and report to the EPA on the program's effectiveness.

[59 FR 42765, Aug. 19, 1994]

§ 52.2308 Area-wide nitrogen oxides (NO_X) exemptions.

(a) The Texas Natural Resource Conservation Commission (TNRCC) submitted to the EPA on June 17, 1994, a petition requesting that the Dallas ozone nonattainment area be exempted from the NO_X control requirements of section 182(f) of the Clean Air Act (CAA) as amended in 1990. The Dallas nonattainment area consists of Dallas, Tarrant, Denton, and Collin counties. The exemption request was based on a photochemical grid modeling which shows that the Dallas nonattainment area would attain the National Ambient Air Quality Standards (NAAQS) for ozone by the CAA mandated deadline without the implementation of the additional NO_X controls required under section 182(f). On November 21, 1994, the EPA conditionally approved this exemption request, conditioned upon the EPA approving the modeling portion of the Dallas attainment demonstration SIP.

(b) The TNRCC submitted to the EPA on June 17, 1994, a petition requesting that the El Paso ozone nonattainment area be exempted from the NO_X control requirements of section 182(f) of the Clean Air Act (CAA) as amended in 1990. The El Paso nonattainment area consists of El Paso county, and shares a common airshed with Juarez, Mexico. The exemption request was based on a photochemical grid modeling which shows that the El Paso nonattainment area would attain the NAAQS for ozone by the CAA mandated deadline without the implementation of the additional NO_X controls required under section 182(f), but for emissions emanating from Mexico. On November 21, 1994, the EPA conditionally approved this exemption request, conditioned upon the EPA approving the modeling portion of the El Paso attainment demonstration SIP.

(c) The Texas Natural Resource Conservation Commission submitted to the EPA on May 4, 1994, a petition requesting that the Victoria County incomplete data ozone nonattainment area be exempted from the requirement to meet the NO_X provisions of the Federal transportation conformity rule. The exemption request was based on monitoring data which demonstrated that the National Ambient Air Quality Standard for ozone had been attained in this area for the 35 months prior to the petition, with the understanding that approval of the State's request would be contingent upon the collection of one additional month of data. The required additional month of verified data was submitted later and, together with the data submitted with the State's petition, demonstrated attainment of the NAAQS for 36 consecutive months. The EPA approved this exemption request on March 2, 1995.

(d) The TNRCC submitted to the EPA on August 17, 1994, with supplemental information submitted on August 31, 1994, and September 9, 1994, a petition requesting that the Houston and Beaumont ozone nonattainment areas be temporarily exempted from the NO_X control requirements of section 182(f) of the CAA. The Houston nonattainment area consists of Brazoria, Chambers, Fort Bend, Galveston, Harris, Liberty, Montgomery, and Waller counties. The Beaumont nonattainment area consists of Hardin, Jefferson, and Orange counties. The exemption request was based on photochemical grid modeling which shows that reductions in NO_X would not contribute to attaining the ozone NAAQS. On April 12, 1995, the EPA approved the State's request for a temporary exemption. Approval of the temporary exemption waives the federal requirements for NO_X Reasonably Available Control Technology (RACT), New Source Review (NSR), conformity, and vehicle inspection and maintenance (I/M) for the period of the temporary exemption. The temporary exemption automatically expires on December 31, 1996, without further notice from the EPA. Based on the rationale provided in the notice of proposed rulemaking on this action, upon the expiration of the temporary exemption, the requirements pertaining to NO_X RACT, NSR, conformity, and I/M will again become applicable, except that the NO_X RACT implementation date applicable to the Houston and Beaumont nonattainment areas under section 182(f) shall be as

expeditious as practicable but no later than May 31, 1997, unless the State has received a permanent NO_X exemption from the EPA prior to that time.

[59 FR 60714, Nov. 28, 1994, as amended at 60 FR 5867, Jan. 31, 1995; 60 FR 19522, Apr. 19, 1995]

§ 52.2309 Emissions inventories.

(a) The Governor of the State of Texas submitted the 1990 base year emission inventories for the Houston/Galveston (HGA), Beaumont/Port Arthur (BPA), El Paso (ELP), and Dallas/Fort Worth (DFW) ozone nonattainment areas on November 17, 1992 as a revision to the State Implementation Plan (SIP). The 1990 base year emission inventory requirement of section 182(a)(1) of the Clean Air Act, as amended in 1990, has been satisfied for each of these areas.

(b) The inventories are for the ozone precursors which are volatile organic compounds, nitrogen oxides, and carbon monoxide. The inventories cover point, area, non-road mobile, on-road mobile, and biogenic sources.

(c) The HGA nonattainment area is classified as Severe-17 and includes Brazoria, Chambers, Fort Bend, Galveston, Harris, Liberty, Montgomery, and Waller Counties; the BPA nonattainment area is classified as Serious and includes Hardin, Jefferson, and Orange Counties; the ELP nonattainment area is classified as Serious and includes El Paso County; and the DFW nonattainment area is classified as Moderate and includes Collin, Dallas, Denton, and Tarrant Counties.

[59 FR 55589, Nov. 8, 1994]

Subpart TT—Utah

§ 52.2320 Identification of plan.

(a) Title of plan: ''Utah Implementation Plan.''

(b) The plan was officially submitted on January 25, 1972.

(c) The plan revisions listed below were submitted on the dates specified.

(1) Clarifications of the plan relating to particulate regulations, CO and NO_2 control strategies, new source review, emergency episodes, availability of emission data, and source surveillance submitted May 18, 1972, by State Division of Health.

(2) Revision of State new source review regulation, section 1.3.3 of the Utah Code of Air Conservation Regulations, submitted on September 13, 1972, by the Governor.

(3) Transportation control plan submitted April 13, 1973, by the Governor.

(4) Reenacted legislation providing for public availability of emission data submitted on June 13, 1974, by the State Division of Health.

(5) The Revised Utah Air Conservation Regulations on July 10, 1975, by the Governor.

(6) Provisions to meet the requirements of Part D and other sections of the Clean Air Act, as amended in 1977, were submitted on December 28, 1978, by the Governor.

(7) On November 5, 1979, the Governor submitted a plan revision to meet the requirements of Air Quality Monitoring, 40 CFR part 58, subpart C, § 58.20.

(8) Provisions to meet the transportation control requirements of Part D and other sections of the Clean Air Act, as amended in 1977, were submitted on November 5, 1979, and August 11, 1980, by the Governor.

(9) Provisions to meet the requirements of Part D for particulates and to attain the national standard for lead were submitted on March 11, 1980, July 25, 1980, November 13, 1980, December 26, 1980, and April 8, 1981.

(10) Provisions to meet the requirements of Part C of the Clean Air Act, as amended in 1977, were submitted on August 17, 1981.

(11) Provisions to meet the requirements of section 127 and Part D for carbon monoxide and ozone were submitted on August 11, 1980.

(12) Provisions to meet the requirements of Part D of the Clean Air Act, as amended in 1977, for particulates and volatile organic compounds, were submitted on April 8, 1981.

(13) Provisions to meet the requirements of Part D of the Clean Air Act, as amended in 1977, for particulates were submitted on March 1, 1982.

(14) A revision to the definition of volatile organic compound was submitted on April 29, 1982.

(15) Provisions to meet the requirements of Part D of the Clean Air Act,

as amended in 1977, for carbon monoxide in Provo and Ogden, Utah were submitted on September 20, 1982.

(16) Additional information regarding stack monitoring at the main stack at the Kennecott Copper Smelter in Salt Lake City was submitted on December 27, 1982, and February 3, 1984.

(17) Provision to meet the requirements of Part D of the Clean Air Act as amended in 1977 providing for implementing automobile inspection and maintenance in Salt Lake and Davis Counties were submitted on December 9, 1983, December 19, 1983, February 6, 1984, and March 1, 1984. A revision providing for the commitment to adopt regulations for VOC sources covered by future CTG's (Group III) was submitted on February 6, 1984.

(18) A revision to the SIP was submitted by the Governor for attainment of the SO_2 standard on August 17, 1981. Additional submittals January 25, 1983, and September 5, 1984.

(19) A revision to the SIP was submitted by the Governor on April 26, 1985, for visibility monitoring and new source review.

(i) Incorporation by reference.

(A) Letter dated April 26, 1985, from Governor Norman Bangerter submitting the Utah Visibility SIP and Regulations.

(B) The Visibility SIP and the Utah Air Conservaton Regulations 1.1.7 and 3.11.1 were adopted on April 15, 1985 referred to in the Governor's letter as April 12, 1985.

(20) A revision to the SIP was submitted by the Governor on December 12, 1985, for attaintment of the CO standard in Utah County.

(i) Incorporation by reference.

(A) Letter and attachments dated December 12, 1985, from Governor Norman H. Bangerter submitting the SIP Revision for attainment of NAAQS for CO in Utah County. The attachments included Section 9, Part C; Section 9, Appendices A, C, H, and I; and Technical Support Document—Provo.

(ii) Additional material.

(A) Letter dated May 8, 1986, from Brent C. Bradford to Irwin Dickstein; Re: Response to questions on I/M with anti-tampering program.

(B) Letter and attachment dated May 15, 1986, from Brent Bradford to Irwin Dickstein transmitting Appendix D of the Technical Support Document.

(21) A revision to the SIP was submitted by the Governor on December 11, 1987, for visibility general plan requirements and long-term strategies.

(i) Incorporation by reference.

(A) Letter dated December 2, 1988, from the Utah Bureau of Air Quality to the U.S. Environmental Protection Agency, Region VIII.

(B) A revised section 16, Visibility Protection, of the Utah SIP was adopted on November 12, 1987, except for the first three paragraphs of § 16.1, the fifth and sixth paragraph of § 16.4, and the second and third paragraphs of § 16.5.

(22) In a letter dated May 2, 1986, the Governor submitted revisions to the Utah Air Conservation Regulations addressing GEP stack heights/dispersion techniques and a new Section 17 to the SIP addressing GEP stack height demonstration analysis.

(i) Incorporation by reference.

(A) Revisions to the Utah Air Conservation Regulations adopted April 18, 1986. The revisions consist of adding stack height definitions (UACR 1.1.128 through UACR 1.1.133) and updating stack height exemptions (UACR 3.8).

(B) Stack height demonstration analysis submitted by the State in a letter dated May 2, 1986.

(23) On May 2, 1991 the Governor of Utah submitted revisions to the plan. The revisions include amendments to the prevention of significant deterioration (PSD) portion of the plan to incorporate the nitrogen dioxide (NO_2) increments, and several ''housekeeping'' changes to definitions, new source review, and PSD regulations.

(i) Incorporation by reference.

(A) Revisions to the Utah Air Conservation Regulations, section R446–1–1, Foreword and Definitions, section R446–1–3, Control of Installations, and section R446–2–1, Utah State Implementation Plan Incorporation by Reference, effective January 1, 1991.

(B) Letter dated May 1, 1991, from Kenneth Hansen of the Utah Division of Administrative Rules to Dave McNeill of the Utah Bureau of Air Quality, confirming a codification change to paragraph R446–1–3.6.5, effective May 1, 1991. This letter contains a reprinted version of R446–1–3.6.5.

(ii) Additional material.

(A) February 26, 1991, letter from F. Burnell Cordner, Executive Secretary, Utah Air Conservation Committee, to Douglas M. Skie, EPA, transmitting administrative materials for the SIP revision.

(B) May 2, 1991, letter from Norman H. Bangerter, Governor, State of Utah, to James J. Scherer, EPA. Official SIP submittal, transmitting the SIP narrative modifying section 8, Prevention of Significant Deterioration, and other administrative materials.

(24) On May 4, 1990, and July 25, 1991, the Governor of Utah submitted revisions to the plan. The revisions include amendments to the ozone nonattainment area regulations for stationary sources of volatile organic compounds (VOCs), contained within Regulation R446–1–4.9 of the Utah Air Conservation Regulations, ''Emission Standards. Non-Attainment Area Requirements—Ozone,'' and the definitions applicable to the VOC regulations, contained within Regulation R446–1–1, ''Foreward and Definitions.'' The amendments were made to conform Regulations R446–1–1 and R446–1–4.9 to statutory requirements for application of reasonably available control technology (RACT) to stationary sources of VOC's, as required by section 182(a)(2)(A) of the 1990 Clean Air Act, and to improve the clarity and enforceability of the regulations.

(i) *Incorporation by reference.* (A) Revisions to the following Utah Air Conservation Regulations, Section R446–1–1, Foreward and Definitions, effective January 1, 1991: R446–1–1.10, 1.16, 1.40, 1.60, 1.109, 1.126, 1.140, 1.150, 1.151, 1.159, 1.160, 1.161, 1.162, 1.163, 1.164, 1.165, 1.166, 1.167, 1.168, 1.169, 1.170, 1.171, 1.172, 1.173, 1.174, 1.175, 1.176, 1.177, 1.178, 1.180, 1.182, 1.183, 1.184.

(B) Revisions to the following rules of R446–1–4.9, *Emission Standards. Non-Attainment Area Requirements—Ozone,* effective June 15, 1991: 4.9.A through 4.9.E were added (disposal of VOCs; requirements for EPA concurrence on alternative test methods, alternative methods of control, alternative compliance periods, alternative emission limits, or alternative monitoring schedules; recordkeeping and reporting requirements; RACT requirements for major non-CTG sources; ''once-in, always-in'' requirements; and allowance for exclusion of non-reactive VOC's); revisions to 4.9.1 (Petroleum Liquid Storage), 4.9.2 (Gasoline Transfer/Storage), 4.9.3 (Control of Hydrocarbon Emissions in Refineries), 4.9.4 (Degreasing and Solvent Cleaning Operations), 4.9.5 (Cutback Asphalt), 4.9.6 (Volatile Organic Compounds Used for Coating Paper, Fabric, Vinyl, Metal Furniture, Large Appliances, Magnet Wire, Flat Wood Paneling, Miscellaneous Metal Parts and Products, and Graphic Arts), 4.9.7 (Perchlorethylene Dry Cleaning Plants), 4.9.8 (Compliance Schedule); 4.9.9 (Compliance Schedule) was deleted.

(ii) *Additional material.* (A) May 9, 1991, letter from F. Burnell Cordner, Executive Secretary, Utah Air Conservation Committee, to Douglas Skie, EPA. This letter provided final changes to R446–1–4.9, indicated that these changes would become effective on June 15, 1991, and indicated that the State would submit the Ozone SIP revision package to EPA after the changes become effective.

(B) July 25, 1991, letter from Norman H. Bangerter, Governor, State of Utah, to James Scherer, EPA. Official SIP submittal, transmitting revised Regulation R446–1–4.9, and other administrative materials. This letter provided a negative declaration for seven CTG source categories: large petroleum dry cleaners, manufacturers of high density polyethylene, polypropylene, polystyrene resins, manufacturers of synthesized pharmaceutical products, manufacturers of pneumatic rubber tires, natural gas/gas processing plants, and synthetic organic chemical manufacturing industries (SOCMI) with fugitive emissions and/or air oxidation processes.

(C) September 5, 1991, letter from F. Burnell Cordner, Executive Secretary, Utah Air Quality Board, to James Scherer, EPA. This letter provided a negative declaration for three CTG source categories: surface coating of cans, surface coating of metal coils, and surface coating of automobiles and light duty trucks.

(D) January 30, 1992, letter from F. Burnell Cordner, Executive Secretary, Utah Air Quality Board, to Doug Skie,

EPA. This letter contained the State's commitment to conduct capture efficiency testing using the most recent EPA capture efficiency protocols, and the commitment to adopt federal capture efficiency test methods after they are officially promulgated by EPA.

(25) The Governor of Utah submitted a PM_{10} State Implementation Plan (SIP) for Salt Lake and Utah Counties, Utah with a letter dated November 15, 1991. The submittals were made to satisfy those moderate PM_{10} nonattainment area SIP requirements due for Salt Lake and Utah Counties as outlined in the Clean Air Act of 1990. The Governor's submittal also included revisions to the Utah Air Quality Rules and to other sections of the State-wide SIP. The Utah Air Conservation Regulations have been revised and renumbered over the past decade and are being replaced in its entirely with this Governor's submittal.

(i) Incorporation by reference.

(A) Utah Air Conservation Regulations, printed January 27, 1992.

(B) Utah State Implementation Plan, Section 1–7 and 10–15, effective March 31, 1992.

(C) Utah State Implementation Plan, Section 9, Part A and Section 9, Part A, Appendix A effective August 14, 1991.

(26) On November 9, 1992, Norman Bangerter, the Governor of Utah, submitted a SIP revision to the Utah Implementation Plan and Utah Air Conservation Regulations. This revision establishes and requires the implementation of oxygenated fuel programs in Provo-Orem and Salt Lake-Ogden Metropolitan Statistical Areas as required by section 211(m) of the Clean Air Act Amendments of 1990.

(i) Incorporation by reference.

(A) R307–8; Oxygenated Gasoline Program, of the Utah Air Conservation Regulations as adopted by the State, effective December 16, 1993.

(ii) Additional materials.

(A) Letter dated November 9, 1992, from Governor Norman Bangerter submitting the oxygenated gasoline program SIP revision.

(B) Letter dated May 19, 1994, from Governor Michael O. Leavitt submitting the oxygenated gasoline program SIP revision.

(27) The Governor of Utah submitted a Section 16, Stack Height Demonstration and Section 9, Part B, Sulfur Dioxide of the Utah State Implementation Plan (SIP) a letter dated December 23, 1991, and May 15, 1992, respectively. The Governor's submittal also included statewide SO_2 regulations.

(i) Incorporation by reference.

(A) Utah State Implementation Plan, Section 16, effective December 16, 1991.

(B) Utah State Implementation Plan, Section 9, Part B effective June 15, 1992.

(C) Utah Air Conservation Regulations, R307–1–4. Emission Standards: changes to 4.2 Sulfur Content of Fuels and 4.6.2, effective June 15, 1992.

(28) On November 12, 1993, the Governor of Utah submitted revisions to its permitting requirements to satisfy the nonattainment new source review provisions in the amended Clean Air Act for all of its nonattainment areas. On May 20, 1994, the Governor of Utah submitted a revision to Utah's definition of volatile organic compounds.

(i) Incorporation by reference.

(A) Utah Air Conservation Regulations, R307–1–1, the forward and the following definitions: ''air contaminant,'' ''air contaminant source,'' ''air pollution,'' ''allowable emissions,'' ''ambient air,'' ''best available control technology (BACT),'' ''board,'' ''department,'' ''dispersion technique,'' ''emission limitation,'' ''executive director,'' ''executive secretary,'' ''major modification,'' ''major source,'' ''PM–10 precursor,'' ''person,'' ''temporary,'' and ''volatile organic compound (VOC);'' effective November 15, 1993, printed June 24, 1994.

(B) Utah Air Conservation Regulations, R307–1–3.1.8, R307–1–3.1.10, and R307–1–3.3; effective August 16, 1993, printed May 26, 1994.

(ii) Additional material.

(A) Letter dated October 18, 1994 from Russell A. Roberts to Douglas M. Skie clarifying applicability of Utah's nonattainment new source review permitting requirements.

(29) Revisions to the Utah State Implementation Plan for the 1990 Carbon Monoxide Base Year emission inventories for Ogden City, Salt Lake City, and Utah County were submitted by

the Governor in a letter dated July 11, 1994.

(i) Incorporation by reference.

(A) Carbon Monoxide 1990 Base Year Emission Inventories for Ogden City, Utah SIP, Section IX, Part C.3., Table IX.C.5; Salt Lake City, Utah SIP, Section IX, Part C.3., Table IX.C.4; and Utah County, Utah SIP, Section IX, Part C.6., Table IX.C.10 all of which became effective on August 31, 1994.

(30) [Reserved]

(31) On February 1, 1995, the Governor of Utah submitted revisions to the prevention of significant deterioration permitting regulations in R307–1–1 and R307–1–3 of the Utah Air Conservation Regulations to incorporate changes in the Federal PSD permitting regulations for PM–10 increments and to make other minor, administrative changes.

(i) Incorporation by reference.

(A) Revisions to the Utah Air Conservation Regulations, R307–1–1, the definitions of ''baseline area,'' ''baseline date,'' ''net emissions increase,'' and ''significant,'' effective 9/22/94, printed 10/24/94.

(B) Revisions to the Utah Air Conservation Regulations, R307–1–3, Sections 3.6.2.B, 3.6.2.D, 3.6.2.E, 3.6.3.A, 3.6.3.B, 3.6.3.D.(2) and (3), 3.6.4.A.(1), 3.6.4.C, 3.6.4.D, 3.6.5.A, 3.6.5.B.(1)(a), 3.6.5.C, 3.6.5.D, 3.6.5.E, 3.6.5.F, and 3.6.6, effective 10/1/94, printed 10/24/94.

(32)–(33) [Reserved]

(34) Revisions to the Utah State Implementation Plan for the Emission Statement Inventory regulation, UACR R307–1–3.5.4., revision of the ozone nonattainment area designation definition, UACR R307–1–3.3.3C, and other minor changes to definitions in UACR R307–1–1. were submitted by the Governor in a letter dated November 12, 1993.

(i) Incorporation by reference.

(A) Emission Statement Inventory regulation, UACR R307–1–3.5.4, ozone nonattainment area designation definition, UACR R307–1–3.3.3C, and the following definitions in UACR R307–1–1.; ''Control Apparatus'', ''Emissions Information'', ''Peak Ozone Season'', ''Process Level'', and ''Process Rate''. All were adopted on August 4, 1993, and became effective on November 15, 1993.

(B) A letter dated May 30, 1995, from Russell Roberts, Director, Utah Division of Air Quality to Douglas Skie, Chief, Air Programs Branch for Region 8.

[37 FR 10898, May 31, 1972]

EDITORIAL NOTE: For FEDERAL REGISTER citations affecting § 52.2320, see the List of CFR Sections Affected in the Finding Aids section of this volume.

EFFECTIVE DATE NOTE: At 61 FR 20145, May 6, 1996, § 52.2320 was amended by adding paragraph (c)(34), effective July 5, 1996.

§ 52.2321 Classification of regions.

The Utah plan was evaluated on the basis of the following classifications:

Air quality control region	Pollutant				
	Particulate matter	Sulfur oxides	Nitrogen dioxide	Carbon monoxide	Photochemical oxidants (hydrocarbons)
Wasatch Front Intrastate	I	I	I	I	I
Four Corners Interstate	IA	IA	III	III	III
Utah Intrastate	III	III	III	III	III

[37 FR 10898, May 31, 1972, as amended at 39 FR 16347, May 8, 1974]

§ 52.2322 [Reserved]

§ 52.2323 Approval status.

With the exceptions set forth in this subpart, the Administrator approves Utah's plan as meeting the requirements of section 110 of the Clean Air Act as amended in 1977. Furthermore, the Administrator finds that the plan satisfies all requirements of Part D, Title 1, of the Clean Air Act as amended in 1977, except as noted below.

[45 FR 10765, Feb. 19, 1980]

§§52.2324—52.2330 [Reserved]

§52.2331 Attainment dates for national standards.

The attainment date for the secondary NAAQS for sulfur dioxide for Salt Lake County and portions of Tooele County is December 31, 1994.

[61 FR 16062, Apr. 11, 1996]

§52.2332 Control Strategy: Ozone.

Determinations—EPA is determining that, as of July 18, 1995, the Salt Lake and Davis Counties ozone nonattainment area has attained the ozone standard based on air quality monitoring data from 1992, 1993, and 1994, and that the reasonable further progress and attainment demonstration requirements of section 182(b)(1) and related requirements of section 172(c)(9) of the Clean Air Act do not apply to the area for so long as the area does not monitor any violations of the ozone standard. If a violation of the ozone NAAQS is monitored in the Salt Lake and Davis Counties ozone nonattainment area, these determinations shall no longer apply.

[60 FR 36729, July 18, 1995]

§52.2333 Legal authority.

(a) The requirements of §51.230(f) of this chapter are not met since section 26–24–16 of the Utah Code Annotated (1953), may preclude the release of emission data, as correlated with applicable emission limitations, under certain circumstances.

[37 FR 15090, July 27, 1972, as amended at 51 FR 40676, Nov. 7, 1986]

§§52.2334—52.2345 [Reserved]

§52.2346 Significant deterioration of air quality.

(a) The Utah plan, as submitted, is approved as meeting the requirements of Part C, Title I, of the Clean Air Act, except that it does not apply to sources proposing to construct on Indian Reservations.

(b) *Regulation for prevention of significant deterioration of air quality*. The provisions of §52.21 (b) through (v) are hereby incorporated by reference and made a part of the Utah State Implementation Plan and are applicable to proposed major stationary sources or major modifications to be located on Indian Reservations.

(c) The State of Utah has clarified the generalized language contained in the Utah Air Conservation Regulations on the use of the ''Guidelines on Air Quality Models.'' In a letter to Douglas M. Skie, EPA, dated May 26, 1989, F. Burnell Cordner, Director of the Bureau of Air Quality stated:

> * * * The language in section 3.7 of the Utah Air Conservation Regulations on the use of ''Guidelines on Air Quality Models'' means that all PSD permit reviews will comply with the use of the ''Guideline on Air Quality Models (Revised)'', EPA 450/2–78–027R, and any future supplements approved by EPA.

[47 FR 6428, Feb. 12, 1982, as amended at 54 FR 27881, July 3, 1989]

§52.2347 Stack height regulations.

The State of Utah has committed to revise its stack height regulations should EPA complete rulemaking to respond to the decision in *NRDC v. Thomas*, 838 F. 2d 1224 (D.C. Cir. 1988). In a letter to Douglas M. Skie, EPA, dated May 27, 1988, F. Burnell Cordner, Director, Bureau of Air Quality, stated:

> * * * We are submitting this letter to allow EPA to continue to process our current SIP submittal with the understanding that if the EPA's response to the NRDC remand modifies the July 8, 1985 regulations, the EPA will notify the State of the rules that must be changed to comply with the EPA's modified requirements. The State of Utah agrees to process appropriate changes.

[54 FR 24341, June 7, 1989]

§52.2348 Small business assistance program.

The Governor of Utah submitted on November 9, 1992, a plan to develop and implement a Small Business Assistance Program to meet the requirements of section 507 of the Clean Air Act by November 15, 1994. The plan commits to provide technical and compliance assistance to small businesses, hire an Ombudsman to serve as an independent advocate for small businesses, and establish a Compliance Advisory Panel to advise the program and report to EPA on the program's effectiveness.

[59 FR 1486, Jan. 11, 1994]

Subpart UU—Vermont

§ 52.2370 Identification of plan.

(a) Title of plan: ''State of Vermont Implementation Plan for the Achievement of National Air Quality Standards.''

(b) The plan was officially submitted on January 29, 1972.

(c) The plan revisions listed below were submitted on the dates specified.

(1) Notice of public hearing submitted on February 3, 1972, by the Vermont Agency of Environmental Conservation.

(2) Miscellaneous non-regulatory revisions to the plan submitted on February 25, 1972, by the Vermont Agency of Environmental Conservation.

(3) Miscellaneous changes to regulations 5–412, 5–466, 5–467, 5–481, 5–486, 5–487, and 5–488 submitted on May 19, 1972, by the Vermont Agency of Environmental Conservation.

(4) Revision to the particulate emission limitation or Fuel Burning Equipment, revision to Rule 6, ''Rules of Practice,'' of the Air Quality Variance Board and miscellaneous non-regulatory revisions submitted on March 3, 1975, by the Vermont Agency of Environmental Conservation.

(5) Revision to Chapter 5, ''Incinerator Emissions'' submitted on November 30, 1973, by the Vermont Agency of Environmental Conservation.

(6) Revision to Vermont Regulations, Chapter 5, ''Air Pollution Control'', by letter submitted on July 19, 1976 by the Vermont Agency of Environmental Conservation.

(7) Revision to Regulation 5–231, Prohibition of Particulate Matter, section 1, Industrial Process Emissions, with respect to wood processing operations, submitted by the Vermont Secretary of Environmental Conservation on April 11, 1977.

(8) Revisions to Chapter 5 of the Vermont Air Pollution Control Regulations, submitted by the Secretary of Environmental Conservation on February 21, 1978.

(9) Plans to meet various requirements of the Clean Air Act, including Part C, were submitted on March 21 and November 21, 1979. Included in these revisions is a program for the review of construction and operation of new and modified major stationary sources of pollution in attainment areas.

(10) Attainment plans to meet the requirements of Part D and the Clean Air Act, as amended in 1977, were submitted on March 21, November 21, November 27 and December 19, 1979. Included are plans to attain: The secondary TSP standard for Barre City and a portion of the Champlain Valley Air Management Area, the carbon monoxide standard in the Champlain Valley Air Management Area and the ozone standard in Chittenden, Addison, and Windsor Counties. A program was also submitted for the review of construction and operation of new and modified major stationary sources of pollution in non-attainment areas. Certain miscellaneous provisions were also included.

(11) A plan to provide for public, local and state involvement in federally funded air pollution control activities was submitted on March 28, 1980.

(12) A plan to attain and maintain the National Ambient Air Quality Standard for lead was submitted on June 24, 1980 by the Secretary of the Vermont Agency of Environmental Conservation. A letter further explaining the state procedures for review ofnew major sources of lead emissions was submitted on November 7, 1980 by the Director, Air & Solid Waste Programs, Vermont Agency of Environmental Conservation.

(13) A revision to the air quality monitoring network which meets the requirements of 40 CFR part 58, submitted on March 21, 1979 by the Governor of Vermont.

(14) A revision to regulation 5–221(1), ''Sulfur Limitation in Fuel,'' submitted by the Secretary of the Vermont Agency of Environmental Conservation on November 13, 1979.

(15) Revisions to amend Regulations 5–101 ''Definitions'', 5–501 ''Review of Construction or Modification of New Air Contaminant Sources'', 5–502 ''Major Stationary Sources'', and Section 9 of the non-regulatory portion of the SIP; to delete Regulations 5–253(1 ''Storage of Volatile Organic Compounds'', 5–253(3), ''Bulk Gasoline Terminals'', and 5–231(4) ''Potentially Hazardous Particulate Matter''; to add Regulation 5–261 ''Control of Hazardous

Air Contaminants''; and to amend Table 3 of the Regulations ''Levels of Significant Impact for Nonattainment Areas''; submitted by the Secretary of the Vermont Agency of Environmental Conservation on August 24, 1981.

(16) A revision to Regulation 5–231, ''Prohibition of Particulate Matter,'' by the addition of subparagraph (3)(b) submitted by the Secretary of the Vermont Agency of Environmental Conservation for all but three stationary wood-fired combustion sources (excluded from submittal: Moran Generating Station, Burlington Electric Department; Rutland Plywood Company; and Cersosimo Lumber Company) on February 12, 1982.

(17) A revision to approve Regulation 5–231(3)(b) for Cersosimo Lumber Company submitted on March 23, 1983 by the Secretary of the Vermont Agency of Environmental Conservation. (Note: The Cersosimo Lumber Company was excluded from the original approval of Regulation 5–231(3)(b) into the Vermont SIP identified at subparagraph (c)(16) above.)

(18) A revision to approve Vermont Regulation 5–231(3)(b) for Rutland Plywood Corporation, submitted on October 19, 1984 by the Secretary of the Vermont Agency of Environmental Conservation.

NOTE: Rutland Plywood Corporation was excluded from the original approval of Regulation 5–231(3)(b) in the Vermont SIP, identified at paragraph (c)(16) above.

(19) A plan to protect visibility in the Lye Brook Wilderness, a mandatory Class I Federal area, from impairment caused by plume blight and to monitor visibility, in fulfillment of the requirements of 40 CFR part 51, subpart P. Submitted on April 15, 1986, the plan approves, only as they apply to mandatory Class I Federal areas, revisions to Vermont Regulations 5–101 (3), (14), (21), (59), and (76); 5–501(4); and 5–502 (4)(d) and (4)(e).

(i) Incorporation by reference.

(A) Amendments to Environmental Protection Regulations Chapter 5, Air Pollution Control, Subchapter I. Definitions, 5–101 at subsections (3), (14), (21), (59), and (76), filed in its adopted form on September 2, 1986.

(B) Amendments to Environmental Protection Regulations Chapter 5, Air Pollution Control, Subchapter V. Review of New Air Contaminant Sources, 5–501 at subsection (4) requiring responsiveness to comments and any analyses submitted by any Federal Land Manager, filed in its adopted form on September 2, 1986.

(C) Amendments to Environmental Protection Regulations Chapter 5, Air Pollution Control, Subchapter V. Review of New Air Contaminant Sources, 5–502 at subsection (4)(d) requiring a demonstration of no adverse impact on visibility in any Class I Federal area; and at subsection (4)(e) which reletters the former subsection (4)(d), filed in its adopted form on September 2, 1986.

(ii) Additional material.

(A) Narrative submittal consisting of two volumes entitled, ''Implementation Plan for the Protection of Visibility in the State of Vermont'' and ''Appendices'' describing procedures, notifications, and technical evaluations to fulfill the visibility protection requirements of 40 CFR part 51, subpart P.

(20) Revisions to the State Implementation Plan submitted by the Vermont Air Pollution Control Division on December 7, 1990 and January 10, 1991.

(i) Incorporation by reference.

(A) Letter dated December 7, 1990 and letter with attachments dated January 10, 1991 from the Vermont Air Pollution Control Division submitting revisions to the Vermont State Implementation Plan.

(B) Section 5–301 ''Scope,'' section 5–309 ''Nitrogen Dioxide—Primary and Secondary Ambient Air Quality Standards,'' and Table 2 ''Prevention of Significant Deterioration (PSD) Increments,'' of Chapter 5 ''Air Pollution Control'' of Vermont's Environmental Protection Regulations effective in the State of Vermont on December ?, 1990.

(ii) Additional materials.

(A) A state implementation plan narrative dated November, 1990 and entitled ''State of Vermont Air Quality Implementation Plan.

(B) Nonregulatory portions of the state submittal.

(21) Revisions to the State Implementation Plan submitted by the Vermont Air Pollution Control Division on August 9, 1993.

(i) Incorporation by reference.

(A) Letter dated August 9, 1993 from the Vermont Air Pollution Control Division submitting revisions to the Vermont State Implementation Plan. Vermont resubmitted Vermont's rule entitled ''Registration of Air Contaminant Sources,'' Sections 5–801 through 5–806 and the SIP narrative entitled ''State of Vermont Air Quality Implementation Plan, February 1993'' to meet the emission statement requirements of the Clean Air Act Amendments of 1990.

(B) Letter dated February 4, 1993 from the Vermont Air Pollution Control Division submitting revisions to the Vermont State Implementation Plan which included Vermont's rule entitled ''Registration of Air Contaminant Sources,'' Sections 5–801 through 5–806 and the SIP narrative entitled ''State of Vermont Air Quality Implementation Plan, February 1993'' to meet the emission statement requirements of the Clean Air Act Amendments of 1990. Sections 5–801 through 5–806 were previously adopted by Vermont and became effective on April 20, 1988.

(C) Section 5–801 ''Definitions,'' section 5–802 ''Requirement for Registration,'' section 5–803 ''Registration Procedure,'' section 5–804 ''False or Misleading Information,'' section 5–805 ''Commencement or Recommencement of Operation,'' and section 5–806 ''Transfer of Operation'' effective on April 20, 1988.

(ii) Additional materials.

(A) Vermont's SIP narrative entitled ''State of Vermont Air Quality Implementation Plan, February 1993'' which addresses emission statement requirements not covered by sections 5–801 through 5–806.

(B) Letter dated October 5, 1994 from the Vermont Air Pollution Control Division which clarifies Vermont procedures in developing the emission statement information.

(C) Nonregulatory portions of the submittal.

[37 FR 10898, May 31, 1972]

EDITORIAL NOTE: For FEDERAL REGISTER citations affecting § 52.2370, see the List of CFR Sections Affected in the Finding Aids section of this volume.

§ 52.2371 Classification of regions.

The Vermont plan was evaluated on the basis of the following classifications:

Air quality control region	Pollutant				
	Particulate matter	Sulfur oxides	Nitrogen dioxide	Carbon monoxide	Ozone
Champlain Valley Interstate	II	II	III	III	III
Vermont Intrastate	II	II	III	III	III

[37 FR 10898, May 31, 1972, as amended at 45 FR 10782, Feb. 19, 1980]

§ 52.2372 Approval status.

With the exceptions set forth in this subpart, the Administrator approves Vermont's plan as identified in § 52.2370 for the attainment and maintenance of the national standards under section 110 of the Clean Air Act. Furthermore, the Administrator finds the plans satisfy all requirements of Part D, Title I, of the Clean Air Act, as amended in 1977, except as noted below. In addition, continued satisfaction of the requirements of Part D for the ozone portion of the SIP depends on the adoption and submittal of RACT requirements by July 1, 1980 for the sources covered by CTGs issued between January, 1978 and January, 1979 and adoption and submittal by each subsequent January of additional RACT requirements for sources covered by CTGs issued by the previous January.

[45 FR 10782, Feb. 19, 1980]

§ 52.2373 Legal authority.

(a) The requirements of § 51.230(f) of this chapter are not met. Vermont does not have the authority to make emissions data available to the public since 10 V.S.A. section 363 would require the data to be held confidential if a source certified that it related to production or sales figures, unique processes, or

would tend to affect adversely the competitive position of the owner.

[37 FR 10899, May 31, 1972, as amended at 51 FR 40676, Nov. 7, 1986]

§ 52.2374 General requirements.

(a) The requirements of § 51.116(c) of this chapter are not met since the plan does not provide for public availability of emission data.

(b) Regulation for public availability of emission data. (1) Any person who cannot obtain emission data from the Agency responsible for making emission data available to the public, as specified in the applicable plan, concerning emissions from any source subject to emission limitations which are part of the approved plan may request that the appropriate Regional Administrator obtain and make public such data. Within 30 days after receipt of any such written request, the Regional Administrator shall require the owner or operator of any such source to submit information within 30 days on the nature and amounts of emissions from such source and any other information as may be deemed necessary by the Regional Administrator to determine whether such source is in compliance with applicable emission limitations or other control measures that are part of the applicable plan.

(2) Commencing after the initial notification by the Regional Administrator pursuant to paragraph (b)(1) of this section, the owner or operator of the source shall maintain records of the nature and amounts of emissions from such source and any other information as may be deemed necessary by the Regional Administrator to determine whether such source is in compliance with applicable emission limitations or other control measures that are part of the plan. The information recorded shall be summarized and reported to the Regional Administrator, on forms furnished by the Regional Administrator, and shall be submitted within 45 days after the end of the reporting period. Reporting periods are January 1–June 30 and July 1–December 31.

(3) Information recorded by the owner or operator and copies of this summarizing report submitted to the Regional Administrator shall be retained by the owner or operator for 2 years after the date on which the pertinent report is submitted.

(4) Emission data obtained from owners or operators of stationary sources will be correlated with applicable emission limitations and other control measures that are part of the applicable plan and will be available at the appropriate regional office and at other locations in the state designated by the Regional Administrator.

[37 FR 10899, May 31, 1972, as amended at 40 FR 55333, Nov. 28, 1975; 51 FR 40676, Nov. 7, 1986]

§ 52.2375 Attainment dates for national standards.

The following table presents the latest dates by which the national standards are to be attained. The dates reflect the information presented in Vermont's plan.

Air quality control region and nonattainment area[1]	Pollutant						
	TSP		SO_2		NO_2	CO	O_3
	Primary	Secondary	Primary	Secondary			
Champlain Valley Interstate—Chittenden County:							
Champlain Valley Air Management Area:							
Essex Town (including Essex Jct.)	a	c	a	a	a	b	b
Burlington City	a	c	a	a	a	b	b
South Burlington City	a	c	a	a	a	b	b
Winooski	a	c	a	a	a	b	b
Remainder of Air Management Area	a	a	a	a	a	b	b
Remainder of County	a	a	a	a	a	a	b
Vermont Valley Air Management Area	a	a	a	a	a	a	a
Addison County	a	a	a	a	a	a	b
Remainder of AQCR	a	a	a	a	a	a	a
Vermont Interstate:							
Central Vermont Air Management Area:							
Barre City	a	c	a	a	a	a	a

Air quality control region and nonattainment area[1]	Pollutant						
	TSP		SO_2		NO_2	CO	O_3
	Primary	Secondary	Primary	Secondary			
Remainder of Air Management Area	a	a	a	a	a	a	a
Windsor County	a	a	a	a	a	a	b
Remainder of AQCR	a	a	a	a	a	a	a

[1] Sources subject to plan requirements and attainment dates established under section 110(a)(2)(A) prior to the 1977 Clean Air Act Amendments remain obligated to comply with those regulations by the earlier deadlines. The earlier attainment dates are set out at 40 CFR 52.2375 (1978).

a. Air quality levels presently below secondary standards or area are unclassifiable.
b. 12/31/82.
c. 12/31/87.

[45 FR 10782, Feb. 19, 1980; 46 FR 33525, June 30, 1981]

§ 52.2377 Review of new sources and modifications.

Regulation 5–501(3) entitled ''Default Permits'' is disapproved.

[45 FR 10782, Feb. 19, 1980]

§ 52.2378 Certification of no facilities.

On June 6, 1986, the Vermont Agency of Environmental Conservation submitted a letter certifying that there are no facilities within the State's boundaries subject to the Continuous Emissions Monitoring requirements of 40 CFR part 51, Appendix P. This negative declaration was submitted to EPA in accordance with 40 CFR 51.19(e).

[51 FR 42221, Nov. 24, 1986]

§ 52.2379 [Reserved]

§ 52.2380 Significant deterioration of air quality.

The program to review the construction and operation of new and modified major stationary sources in attainment areas is approved as meeting the requirements of Part C, except regulation 5–501(3) entitled ''Default permits'', and a portion of the SIP revision narrative from the first full paragraph on pages 9–11 through the first four lines of pages 9–12 inclusive, both of which were submitted on March 21, 1979 and which are disapproved.

[45 FR 6784, Jan. 30, 1980]

§ 52.2381 EPA-approved Vermont state regulations.

The following table identifies the state regulations which have been submitted to and adopted by EPA as revisions to the Vermont State Implementation Plan. This table is for informational purposes only and does not have any independent regulatory effect. To determine regulatory requirements for a specific situation consult the plan identified in § 52.2370. To the extent that this table conflicts with §§ 52.2370, 52.2370 governs.

TABLE 52.2381—EPA-Approved Regulations

[Vermont SIP regulations 1972 to present]

State citation, title and subject	Date adopted by State	Date Approved by EPA	FEDERAL REGISTER Citation	Section 52.2370	Comments and unapproved sections
Chapter 5 Air Pollution Control					
Subchapter I Definitions					
Section 5–101 Definitions	12/10/72	5/31/72	37 FR 10899	(b)	
	12/10/72	5/14/73	38 FR 12713	(c)(3)	
	11/19/73	3/22/76	41 FR 11819	(c)(5)	
	12/16/74	1/21/76	41 FR 3085	(c)(4)	
	1/25/78	12/21/78	43 FR 59496	(c)(8)	All of 5–101 (1–42) approved.
	8/12/78	4/16/82	47 FR 16331	(c)(16)	Related to wood-fired boilers.
	3/24/79	1/30/80	45 FR 6781	(c)(9)	Related to PSD.
	11/4/79	2/19/80	45 FR 10775	(c)(10)	All of 5–101 (1–62) approved.
	11/3/81	2/10/82	47 FR 6014	(c)(15)	

TABLE 52.2381—EPA-Approved Regulations—Continued

[Vermont SIP regulations 1972 to present]

State citation, title and subject	Date adopted by State	Date Approved by EPA	FEDERAL REGISTER Citation	Section 52.2370	Comments and unapproved sections
	9/17/86	7/17/87	52 FR 26982	(c)(19) ...	Related to visibility in Class I areas. 5–101(3), (14), (21), (59), and (76) approved.
Subchapter II Prohibitions					
Section 5–201 Open burning prohibited	12/10/72	5/31/72	37 FR 10899	(b)	
	1/25/78	12/21/78	43 FR 59496	(c)(8)	
Section 5–202 Permissible open burning ...	12/10/72	5/31/72	37 FR 10899	(b)	
	1/25/78	12/21/78	43 FR 59496	(c)(8)	
Section 5–203 Procedures for local authorities to burn natural wood.	12/10/72	5/31/72	37 FR 10899	(b)	
	1/25/78	12/21/78	43 FR 59496	(c)(8)	
Section 5–211 Prohibition of visible air contaminants.	12/10/72	5/31/72	37 FR 10899	(b)	
	1/25/78	12/21/78	43 FR 59496	(c)(8)	5–211 (1)(2) approved.
	8/12/78	4/16/82	47 FR 16331	(c)(16) ...	5–211 (3) not approved.
Section 5–221 Prohibition of potentially polluting materials in fuel.	12/10/72	5/31/72	37 FR 10899	(b)	
	3/16/75	1/8/82	47 FR 948	(c)(14) ...	Except 5–221(c) (i) and (ii). Includes Moran Sta. Bubble Approval.
	7/12/76	2/4/77	42 FR 6811	(c)(6)	
	1/25/78	12/21/78	43 FR 59496	(c)(8)	
Section 5–231 Prohibition of particulate matter.	12/10/72	5/31/72	37 FR 10899	(b)	
	12/10/72	5/14/73	38 FR 12713	(c)(3)	
	11/19/73	3/22/76	41 FR 11819	(c)(5)	Regarding incinerators.
	12/16/74	1/21/76	41 FR 3085	(c)(4)	Regarding combustion contaminants.
	7/12/76	2/4/77	42 FR 6811	(c)(6)	Regarding incinerators asphalt plants.
	3/14/77	8/2/78	43 FR 33918	(c)(7)	Regarding wood processing plants.
	1/25/78	12/21/78	43 FR 59496	(c)(8)	
	8/12/78	4/16/82	47 FR 16331	(c)(16) ...	Except Cersosimo Lumber, Rutland Plywood, Moran Sta.
	11/13/81	2/10/82	47 FR 6014	(c)(15) ...	Repealed 5–231 (4).
	.....	8/23/83	48 FR 38235	(c)(17) ...	Approved for Cersosimo Lumber.
	.....	2/26/85	50 FR 7767	(c)(18) ...	Approved for Rutland Plywood.
Section 5–241 Prohibition of nuisance and odor.	12/10/72	5/31/72	37 FR 10899	(b)	
	11/19/73	3/22/76	41 FR 11819	(c)(5)	
	1/25/78	12/21/78	43 FR 59496	(c)(8)	
Section 5–251 Control of nitrogen oxides emissions.	12/10/72	5/31/72	37 FR 10899	(b)	
	1/25/78	12/21/78	43 FR 59496	(c)(8)	
	3/25/79	2/19/80	45 FR 10775	(c)(10) ...	
	11/4/79	2/19/80	45 FR 10775	(c)(10) ...	
Section 5–252 Control of sulfur dioxide emissions.	7/12/76	2/4/77	42 FR 6811	(c)(6)	
	1/25/78	12/21/78	43 FR 59496	(c)(8)	
	3/24/79	2/19/80	45 FR 10775	(c)(10) ...	
	11/4/79	2/19/80	45 FR 10775	(c)(10) ...	
Section 5–261 Control of hazardous air contaminants.	11/3/81	2/10/82	47 FR 6014	(c)(15) ...	
Subchapter III Ambient Air Quality Stds					
Section 5–301 Scope	12/10/72	5/31/72	37 FR 10899	(b)	
	3/24/79	2/19/80	45 FR 10775	(c)(10) ...	
	12/15/90	3/5/91	56 FR 9177	(c)(20) ...	
Section 5–302 Sulfur dioxide primary	12/10/72	5/31/72	37 FR 10899	(b)	
	7/12/76	2/4/77	42 FR 6811	(c)(6)	
	3/24/79	2/19/80	45 FR 10775	(c)(10) ...	

TABLE 52.2381—EPA-Approved Regulations—Continued

[Vermont SIP regulations 1972 to present]

State citation, title and subject	Date adopted by State	Date Approved by EPA	FEDERAL REGISTER Citation	Section 52.2370	Comments and unapproved sections
Section 5–303 Sulfur dioxide (secondary)	12/10/72	5/31/72	37 FR 10899	(b)	
	7/12/76	2/4/77	42 FR 6811	(c)(6)	
	3/24/79	2/19/80	45 FR 10775	(c)(10)	
Section 5–304 TSP (primary)	12/10/72	5/31/72	37 FR 10899	(b)	
	3/24/79	2/19/80	45 FR 10775	(c)(10)	
Section 5–305 TSP (secondary)	12/10/72	5/31/72	37 FR 10899	(b)	
	3/24/79	2/19/80	45 FR 10775	(c)(10)	
Section 5–306 Carbon monoxide primary/secondary.	12/10/72	5/31/72	37 FR 10899	(b)	
	11/19/73	3/22/76	41 FR 11819	(c)(5)	
	3/24/79	2/19/80	45 FR 10775	(c)(10)	
Section 5–307 Ozone primary/secondary	12/10/72	5/31/72	37 FR 10899	(b)	
	12/16/74	1/21/76	41 FR 3085	(c)(4)	
	3/24/79	2/19/80	45 FR 10775	(c)(10)	
Section 5–308 Lead (primary/secondary)	11/3/81	2/10/82	47 FR 6014	(c)(15)	
Section 5–309 Nitrogen dioxide primary/secondary.	12/15/90	3/5/91	56 FR 9177	(c)(20)	
Subchapter IV Operations/Procedures					
Section 5–401 Classification of air contaminant sources.	3/24/79	2/19/80	45 FR 10775	(c)(10)	
Section 5–402 Written reports when requested.	12/10/72	5/31/72	37 FR 10899	(b)	
	12/10/72	5/14/73	38 FR 12713	(c)(3)	
	11/19/73	3/22/76	41 FR 11819	(c)(5)	
	3/24/79	2/19/80	45 FR 10775	(c)(10)	5–402(1) only.
Section 5–403 Circumvention	12/10/72	5/31/72	37 FR 10899	(b)	
Section 5–404 Methods for sampling and testing of sources.	12/10/72	5/31/72	37 FR 10899	(b)	
	1/25/78	12/21/78	43 FR 59496	(c)(8)	
	3/24/78	2/19/80	45 FR 10775	(c)(10)	
Section 5–405 Required air monitoring	12/10/72	5/31/72	37 FR 10899	(b)	
	3/24/79	1/30/80	45 FR 6781	(c)(9)	For PSD Plan.
	3/24/79	2/19/80	45 FR 10775	(c)(10)	For NSR Plan.
Section 5–406 Required air modeling	3/24/79	1/30/80	45 FR 6781	(c)(9)	For PSD Plan.
	3/24/79	2/19/80	45 FR 10775	(c)(10)	For NSR Plan.
Subchapter V Review of New Air Contaminant Sources					
Section 5–501 Review of construction or modification of air contaminant sources.	12/10/72	5/31/72	37 FR 10899	(b)	
	12/10/72	5/14/73	38 FR 12713	(c)(3)	
	1/25/78	12/21/78	43 FR 59496	(c)(8)	
	3/24/79	1/30/80	45 FR 6781	(c)(9)	Except 5–501(3).
	11/04/79	2/19/80	45 FR 10775	(c)(10)	Except 5–501(3).
	11/03/81	2/10/82	47 FR 6014	(c)(15)	
	9/17/86	7/17/87	52 FR 26982	(c)(19)	Related to visibility in Class I areas. 5–501(4) approved.
Section 5–502 Major stationary sources and major modifications.	3/24/79	1/30/80	45 FR 6781	(c)(9)	Except 5–502(5).
	11/04/79	2/19/80	45 FR 10775	(c)(10)	Except 5–502(5).
	11/03/81	2/10/82	47 FR 6014	(c)(15)	
	9/17/86	7/17/87	52 FR 26982	(c)(19)	Related to visibility in Class I areas. 5–502 (4)(d) and (4)(e) approved.
Subchapter VII Motor vehicle emissions					
Section 5–701 Removal of control devices	12/10/72	5/31/72	37 FR 10899	(b)	
	3/24/79	2/19/80	45 FR 10775	(c)(10)	
Section 5–702 Excessive smoke emissions from motor vehicles.	12/10/72	5/31/72	37 FR 10899	(b)	
	3/24/79	2/19/80	45 FR 10775	(c)(10)	
Section 5–801 Effective date	3/24/79	1/30/80	45 FR 6781	(c)(9)	
Table 1—Process weight standards	12/10/72	5/31/72	37 FR 10899	(b)	
	1/25/78	12/21/78	43 FR 59496	(c)(8)	
Figure 1—Fuel-burning equipment	12/10/72	5/31/72	37 FR 10899	(b)	
	7/12/76	2/4/77	42 FR 6811	(c)(6)	
	1/25/78	12/21/78	43 FR 59496	(c)(8)	
Table 2—PSD increments	3/24/79	1/30/80	45 FR 6781	(c)(9)	
	12/15/90	3/5/91	56 FR 9177	(c)(20)	Addition of NO_2 increments for Class I, II, and III areas.
Table 3—Levels of significant impact for nonattainment areas.	3/24/79	2/19/80	45 FR 10775	(c)(10)	
	11/4/79	2/19/80	45 FR 10775	(c)(10)	

TABLE 52.2381—EPA-Approved Regulations—Continued

[Vermont SIP regulations 1972 to present]

State citation, title and subject	Date adopted by State	Date Approved by EPA	FEDERAL REGISTER Citation	Section 52.2370	Comments and unapproved sections
	11/3/81	2/10/82	47 FR 6014	(c)(15) ...	
Definitions	4/20/88	1/10/95	60 FR 2527	(c)(21) ...	
Section 5–802, Requirement for Registration	4/20/88	1/10/95	60 FR 2527	(c)(21) ...	
Section 5–803, Registration Procedure	4/20/88	1/10/95	60 FR 2527	(c)(21) ...	
Section 5–804, False or Misleading Information.	4/20/88	1/10/95	60 FR 2527	(c)(21) ...	
Section 5–805, Commencement or Recommencement of Operation.	4/20/88	1/10/95	60 FR 2527	(c)(21) ...	
Sections 5–806, Transfer of Operation	4/20/88	1/10/95	60 FR 2527	(c)(21) ...	

[49 FR 46142, Nov. 23, 1984, as amended at 50 FR 7768, Feb. 26, 1985; 50 FR 23810, June 6, 1985; 52 FR 26982, July 17, 1987; 56 FR 9177, Mar. 5, 1991; 60 FR 2527, Jan. 10, 1995]

§52.2382 Rules and regulations.

(a) *Non-Part D—No Action.* EPA is neither approving or disapproving the following elements of the revisions:

(1) Permit fees.

(2) Intergovernmental consultation.

(3) Stack height requirements.

(4) Interstate pollution notification requirements.

(5) Conflict of interest requirements.

(b) *Regulation for visibility monitoring and new source review.* The provisions of §§52.26 and 52.27 are hereby incorporated and made a part of the applicable plan for the State of Vermont.

[45 FR 10782, Feb. 19, 1980, as amended at 45 FR 59315, Sept. 9, 1980; 46 FR 66789, Oct. 8, 1980; 46 FR 16897, Mar. 16, 1981; 50 FR 28553, July 12, 1985]

§52.2383 Visibility protection.

(a) The requirements of section 169A of the Clean Air Act are not met because the plan does not include approvable procedures meeting the requirements of 40 CFR 51.305 and 51.307 for protection of visibility in mandatory Class I Federal areas.

(b) Regulations for visibility monitoring and new source review. The provisions of §§52.26 and 52.27 are hereby incorporated and made part of the applicable plan for the State of Vermont.

[51 FR 5505, Feb. 13, 1986]

§52.2384 Stack height review.

The State of Vermont has declared to the satisfaction of EPA that no existing emission limitations have been affected by stack height credits greater than good engineering practice or any other prohibited dispersion techniques as defined in EPA's stack height regulations, as revised on July 8, 1985. This declaration was submitted to EPA on March 21, 1986. The State has further declared in a letter from Harold T. Garabedian, dated March 21, 1986, that, ''[T]he State concludes that our present rule 5–502(4)(d) is adequate to insure that new emission sources will not be able to use credits from modeling ambient impacts at greater than 'good engineering practice' stack height or from using 'other dispersion techniques.'' Thus, Vermont has satisfactorily demonstrated that its regulations meet 40 CFR 51.118 and 51.164.

[52 FR 49407, Dec. 31, 1987]

§52.2385 Requirements for state implementation plan revisions relating to new motor vehicles.

Vermont must comply with the requirements of §51.120.

[60 FR 4738, Jan. 24, 1995]

Subpart VV—Virginia

§52.2420 Identification of plan.

(a) Title of plan: ''Implementation Plan of Virginia.''

(b) The plan was officially submitted on January 30, 1972.

(c) The plan revisions listed below were submitted on the dates specified.

(1) Miscellaneous non-regulatory additions and errata to the plan submitted on May 4, 1972, by the Virginia Air Pollution Control Board.

(2) Revisions to control strategy for particulate matter, section IV, Rules 3 and 7 of the Virginia Air Pollution Control Regulations, and public availability of emission data regulation submitted June 30, 1972, by the Governor.

(3) Revisions to nitrogen dioxide control strategy regulations section 705.05 of the Virginia Air Pollution Control Regulations, submitted July 26, 1972, by the Governor.

(4) Miscellaneous non-regulatory additions to the plan submitted on February 14, 1973, by the Governor.

(5) Transportation control plan for National Capital AQCR submitted April 11, 1973, by the Governor.

(6) Amendments to the National Capital AQCR Transportation Control Plan submitted on May 30, 1973, by the Governor.

(7) Amendments to the National Capital AQCR Transportation Control Plan submitted on July 11, 1973, by the Governor.

(8) Amendments to the National Capital AQCR Transportation Control Plan submitted on July 9, 1973, by the Governor.

(9) Miscellaneous non-regulatory additions to the plan submitted on August 10, 1973, by the Governor.

(10) Revision to plan setting forth control strategy for particulate matter in the State Capital AQCR submitted August 20, 1973, by the Governor.

(11) Indirect Source Review plan was submitted December 6, 1973, by the State Air Pollution Control Board.

(12) Revisions to air quality standards for sulfur oxides section 3.703 of the Commonwealth of Virginia's Regulations for the Control and Abatement of Air Pollution, submitted February 12, 1974, by the Virginia Air Pollution Control Board.

(13) AQMA designations were submitted on May 7, 1974 by the Governor of the State of Virginia.

(14) Revision deleting preface to the State air pollution control regulations submitted May 24, 1974 by the Virginia Air Pollution Control Board.

(15) An amendment to Section 2.05(a) (Variances) former Section 2.01(f) of the Commonwealth of Virginia Regulations for the Control and Abatement to Air Pollution submitted on August 14, 1975 by the Commonwealth Secretary of Commerce and Resources.

(16) A variance to allow the operation of the Alexandria City Incinerator in excess of the federally approved particulate emission limitations for incinerators until December 31, 1979, by the Commonwealth Secretary of Commerce and Resources.

(17) Amendment to section 7.02 (Episode Determination) [former sections 6.01(b), 6.701(b)] of the Commonwealth of Virginia for the Control and Abatement of Air Pollution submitted on January 29, 1976, by the Secretary of Commerce and Resources.

(18) Amendment to sections 7.01 (General) [former section 6.700] and 7.02 (Episode Determination) [former section 6.701(b)] of the Commonwealth of Virginia Regulations for the Control and Abatement of Air Pollution submitted on March 11, 1977, by the Secretary of Commerce and Resources.

(19) Amendments to Part I, Subpart 1.01 (Certain Terms Defined) and to Part IV, Section 4.52 (former Section 4.705.13) of the Commonwealth of Virginia Regulations for the Control and Abatement of Air Pollution submitted on April 16, 1974, by the Commonwealth Secretary for Commerce and Resources.

(20) Amendments to Part I (Definitions), Sections 1.01 and 1.02; amendments to Part II (General), Sections 2.01, 2.03, 2.04, 2.07, 2.08, 2.10, 2.12, 2.30, and 2.31; amendments to Part III (Ambient Air Quality Standards), Sections 3.01, 3.03 [sections 3.03(b)(1) and 3.03(b)(2) are deleted] 3.04, 3.05, 3.06, 3.07 and deletion of Section 3.08; amendments to Part IV (Existing Sources), Sections 4.01, 4.20, 4.40, 4.41, 4.51(b) through 4.51(g), 4.70, 4.71, 4.80–4.86, 4.90–4.92, and 4.100–4.102 and deletion of Section 4.07.02; amendments to Part VII (Air Pollution Episode), Sections 7.01, 7.02, and 7.05; and amendments to Appendices A, B, C (former Appendix A), D, E [former Section 4.08.04], G, H, and I submitted on August 14, 1975 by the Secretary of Commerce and Resources.

(21) Deletion of former Section 4.703.04 (Bacharach Standard) submitted on June 16, 1976 by the Secretary of Commerce and Resources.

(22) Amendments to Part I (Definitions), Section 1.01, submitted on October 20, 1976 by the Secretary of Commerce and Resources.

(23) Amendment to Section 10–17.21 of the Virginia Air Pollution Control Law submitted August 1975 by the Commonwealth.

(24) Amendment to subsection 4.52(e) (former section 4.705.03) of the Virginia regulations for the control and abatement of air pollution; submitted on April 16, 1974, as amended June 16, 1976, by the secretary of commerce and resources.

(25) A variance issued to the Spruance, Virginia plant of E.I. DuPont de Nemours and Company exempting one of their boilers from Rule EX–3 until December 31, 1980, submitted on December 13, 1978 by the Secretary of Commerce and Resources.

(26) On November 28, 1977 the State submitted an amendment to the Virginia SIP consisting of a permit extension and an emission offset for the Hampton Roads Energy Company's proposed refinery and terminal in Portsmouth, Virginia. This submittal was supplemented by the Commonwealth on March 17, 1978, May 26, 1978, August 9, 1978, and October 5, 1979. The March 17th submittal included a letter dated March 6, 1978 from the Commission of the Virginia Department of Highways and Transportation committing to a reduction of nonmethane hydrocarbon emissions through the substitution of emulsion-based asphalt for solvent-based asphalt thus providing the needed emission offset. This letter is an addendum to the Virginia SIP. The State-issued permit to HREC, as amended, is also made part of the Virginia SIP.

(27) On January 11, 1979, the Governor submitted the nonattainment area plans for Virginia with respect to ozone and carbon monoxide.

(28) The following portions of Virginia's September 6, September 21, and December 17, 1979, submittals are approved:

(i) September 6, 1979, submittal: Section 2.33(g)(1)(vi) of the regulation.

(ii) September 21, 1979, submittal, the following Sections of Virginia's regulations: Sections 4.57(b)(2)(ii); 4.55(f)(4)(i); 4.56(e); 4.52(a); 2.03(a)(1); 2.33(f)(3); Part I of the regulations, the definitions of ''Delayed Compliance Order'' and ''Nonattainment Area;'' Sections 4.02(f)(1) through 4.02(f)(5); Appendix N; and those portions of Sections 4.54, 4.55 and 4.56 where the phrase ''will be considered acceptable compliance by the Board'' has been modified.

(iii) December 17, 1979, submittal: Chapter 3, Control Strategy Demonstration, design value for Northern Virginia.

(29) The following portions of Virginia's August 14, 1975, August 31, 1977, and January 11, 1979, submittals as they relate to Section 2.33 are approved:

(i) August 14, 1975, submittal: Section 2.33 (b) and (i).

(ii) August 31, 1977, submittal: Section 2.33(h).

(iii) January 11, 1979, submittal: Section 2.33 (a), (c), (d), (e), (f), (g) and (k).

(30) Amendments of Part I (Definitions), section 1.02; Part II (General Provisions). Sections 2.02 (a), (c), and (e) (former section 2.11 (a), (b), and (d)), section 2.05(b), section 2.11; and Part IV (Regulations for Existing sources), sections 4.10, 4.11, and 4.13 deletion of the following regulations from Part IV: Former sections 4.03.02, 4.05.03, 4.05.04, 4.05.05(b), 4.10.03, 4.705.04, and 4.705.05 submitted on August 14, 1975 by the Secretary of Commerce and Resources.

(31) Amendments on Part I (Definitions), section 1.02; Part III (Ambient Air Quality Standards), section 3.02(c); Part IV (Special Provisions), section 4.02(a), (a)(1), (a)(2), (b), (c), and (d) (Formerly section 2.04) and section 4.03; and Part VII (Air Pollution Episode), sections 7.04 (a), (b), (d), and (e) submitted on October 20, 1976 by the Secretary of Commerce and Resources.

(32) Amendments of Part II, (General Provisions), section 2.02(b) submitted on March 11, 1977, by the Secretary of Commerce and Resources.

(33) Amendments on Part II, (General Provisions), section 2.02(d) submitted on September 20, 1978, by the Secretary of Commerce and Resources.

(34) Amendments to Part II (General Provisions), section 2.06 (b) and (c); and Part VII (Air Pollution Episode), section 7.03(d); and deletion of Part IV (Existing Sources), Rule EX–7, section 4.07.05 submitted on August 14, 1975, by

the Secretary of Commerce and Resources.

(35) Amendments to Part I (Definitions), section 1.02; Part II (General Provisions), section 2.06 (a) and (d); Part III (Ambient Air Quality Standards), section 3.02 (a) and (b); Part IV (Existing Sources), sections 4.20, 4.21, 4.23 (formerly sections 4.41), 4.25, 4.26, 4.27, and 4.51(a), Part VII (Air Pollution Episode), former section 4.51(b) through (g) are changed to section 4.51 (c) through (h). Sections 7.01(b) and 7.02 (a), (b), and (d); and Appendix A; and, deletion of former sections 4.20, 4.21, and 4.22 submitted on September 20, 1978 by the Secretary of Commerce and Resources.

(36) Amendments to Part VII (Air Pollution Episode), sections 7.03 (c) and (e) and 7.04(c); and deletion of Part II (General Provisions), section 2.04(a)(2) as submitted on March 11, 1977 by the Secretary of Commerce and Resources.

(37) Amendments to Part I (Definitions), section 1.02; Part IV (Existing Sources), Rule EX–2, section 4.22; and Part VII (Air Pollution Episode), section 7.03 (a) and (b) as submitted on September 21, 1979 by the Secretary of Commerce and Resources.

(38) A revision submitted by the Commonwealth of Virginia on March 24, 1980 which is intended to establish an Ambient Air Quality Monitoring Network.

(39) Amendments to Part I (Definitions), section 1.02; and Part IV (Emission Standards for Particulate Emissions from Fuel Burning Equipment, Rule EX–3), sections 4.30, 4.31 (except section 4.31(d)(3)) and 4.32 submitted on September 21, 1979.

(40) A revision submitted by the Commonwealth of Virginia on January 9, 1979 consisting of an amendment to the Virginia Regulations for the Control and Abatement of Air Pollution, Part IV, Rule EX–2, Emission Standards for Visible Emissions.

(41) A revision submitted by the Commonwealth of Virginia on August 13, 1979 consisting of a variance from Part IV, Rule EX–10, Sections 4.100(a)(1), (2) and (3) for preparing cars for overseas shipment at the Exchange Service Station on the Naval Base in Norfolk, Virginia.

(42) A variance issued to the Union Camp Corporation Particleboard Plant located at Franklin, Virginia exempting dryers 1FSD, 2FSD, and pre-dryer 3FSD from Part IV, Rule EX–4, Section 4.41(i) until December 15, 1981, submitted on July 28, 1980 and amended on April 16, 1981 by the Virginia Secretary of Commerce and Resources.

(43) The variance issued to the Norfolk Naval Shipyard located at Portsmouth, Virginia exempting the salvage fuel-fired boilers and the power plant boilers from Sections 4.22 and 4.31(a)(1) until July 31, 1982, submitted on August 29, 1980 and amended on May 5, 1981 by the Secretary of Commerce and Resources.

(44) A revision submitted by the Commonwealth of Virginia on June 19, 1980 consists of a 1979 Amendment to the provisions of Section 10–17.12 (Qualifications of members of Board) of the Virginia Air Pollution Control Law.

(45) A revision submitted by the Commonwealth of Virginia on August 19, 1980 consisting of amendments to Section 1.02, 4.10, 4.11, 4.12, 4.13, and 4.102; and Appendix C of the Virginia Air Pollution Control Board Regulations.

(46) The variance issued to the Municipal Incinerator on Oyster Point Road located at Newport News, Virginia exempting the incinerator from Section 4.71 until July 1, 1982, submitted on May 1, 1981 by the Secretary of Commerce and Resources.

(47) Amendments to Chapter 1 of all nonattainment plans; amendments to Chapter 11 of the Richmond, Northern Virginia, Peninsula and Southeastern plans; amendments to Chapter 9 of the Roanoke and Stafford plans; addition of Appendices A and B to all plans; amendments to Chapter 3 of the Northern Virginia, Peninsula, Southeastern, Roanoke and Stafford plans; amendments to Chapter 10 of the Richmond, Peninsula and Southeastern plans; addition of Appendix C to the Northern Virginia Plan; and, certain revisions to Chapter 5 of all plans were submitted by the Secretary of Commerce and Resources on April 13, 1981. Revision of Chapter 10 of the Northern Virginia plan submitted on July 23, 1981.

(48) The revisions submitted on December 17, 1979 by the Secretary of Commerce and Resources related to the

ozone and carbon monoxide nonattainment area plans, except section 1.02, ''Vapor Tight'', sections 4.54(h), 4.56(h), 4.55(m)(2), and 4.57(a)(5), Chapter 3 of the Roanoke plan, Chapter 6 of the Peninsula, Richmond, and Southeastern Virginia plans, and Appendix P.

(49) The May 15, 1980 revision, as amended by the April 3, 1981 revision, submitted by the Secretary of Commerce and Resources pertaining to Chapter 9 of the Richmond and Northern Virginia nonattainment plans. This submittal includes the State Statute authorizing an Inspection and Maintenance program and a schedule for the implementation of this program.

(50) Amendments to Part II (General Provisions), Sections 2.33(a)(5) and 2.34(i) submitted on February 19, 1981, by the Secretary of Commerce and Resources.

(51) Revisions to section 1.02 (Terms Defined) of Part I (Definitions) and Section 4.51(c)(2) of Part IV (Rule EX–5, Emission Standards for Gaseous Pollutants) were submitted by the Secretary of Commerce and Resources, Commonwealth of Virginia, on September 28, 1978.

(52) A revision submitted by the Commonwealth of Virginia on October 20, 1976 consisting of amendments to sections 2.34(a), 2.34(b), and 2.34(h) of the Virginia Air Pollution Control Board Regulations.

(53) A revision submitted by the Commonwealth of Virginia on September 20, 1978 consisting of amendments to Part I, Definitions, modification of ''Combustion Installation''; and sections 4.02(a)(2), 4.02(e), and 4.21 of the Virginia Air Pollution Control Board Regulations.

(54) A revision submitted by the Commonwealth of Virginia on September 6, 1979 consisting of amendments to Part I, Definitions; sections 2.33(a), 2.33(c), 2.33(d), 2.33(e), 2.33(h), 2.33(k), 2.33(m), 3.05(a), 3.05(b), 3.05(c), 4.02(g) (2), (3), (4), (5), and (6), 4.23, 4.40, 4.41, 4.90, 4.91, 4.92(b), 4.93(b), 7.01(b), 7.02(a), 7.02(b), 7.02(d); and, Appendix C of the Virginia Air Pollution Control Board Regulations.

(55) A revision submitted by the Commonwealth of Virginia on September 21, 1979 consisting of amendments to Part I, Definitions; sections 2.03(c), 2.03(e), 2.09(d), 2.09(f), 2.34(c), 2.34(d), 2.34(e), 2.34(f), 2.34(g), 4.02(f) (7) through (10), 4.54(a), 4.54(b), 4.54(c), 4.54(e), 4.54(f), 4.54(g), 4.55(a), 4.56(a), 4.56(c), 4.56(d), 4.56(f), 4.56(g), 4.57(a), 4.57(b); and Appendix M of the Virginia Air Pollution Control Board Regulations.

(56) The variance issued to the Southside Mental Health and Mental Retardation Support Unit located in Petersburg, Virginia exempting the facility from Sections 4.22 and 4.31(a)(1)(ii) until June 30, 1982. It was submitted on May 28, 1981 and amended on August 5, 1981.

(57) A revision submitted by the Commonwealth of Virginia on October 20, 1976 consisting of the addition of Sections 1.02, (Definition of Continuous Emission Monitoring); 4.04 (a) through (f); 4.05 (a) through (e); and Appendix J, except for Part II, Sections a.2. and d.2.

(58) A revision submitted by the Commonwealth of Virginia on September 20, 1978 consisting of amendments to Sections 4.04 (a)(1) and (b); 4.04(e); Appendix J; and, the addition of Sections 4.24 (a), (b) and (c).

(59) Amendments to sections 1.02, 4.56(f)(3), and Appendix M as submitted on April 13, 1981 by the Secretary of Commerce and Resources.

(60) Revisions submitted on February 16, 1981, except the compliance schedules contained in Chapter 7, by the Secretary of Commerce and Resources related to the ozone and carbon monoxide nonattainment plan for the Richmond area.

(61) Amendments to Part III, Ambient Air Quality Standards, Section 3.08, Lead, submitted on December 30, 1980 by the Secretary of Commerce and Resources.

(62) A variance issued to the U.S. Marine Corps Quantico Base Central Heating Plant located in Prince William County, Virginia, exempting their boilers from Rules EX–2 and EX–3 until October 31, 1984, submitted on November 5, 1980, revised on December 16, 1981 and further revised December 1, 1983 by the Commonwealth of Virginia.

(63) [Reserved]

(64) Amendments to Part V, sections 5.01, 5.13, and 5.17 as submitted on August 14, 1975 by the Secretary of Commerce and Resources.

(65) Amendments to Part V, sections 5.02 (b) through (d), 5.03, 5.04 (b) through (d) and (f), and 5.05 as submitted on October 20, 1976 by the Secretary of Commerce and Resources.

(66) Amendments to Part V, sections 5.02 (a) and (e), 5.04 (a) and (e), 5.10, 5.14, 5.15, and 5.16 as submitted September 20, 1978 by the Secretary of Commerce and Resources.

(67) Amendments to Part V, sections 5.40 and 5.45 as submitted on September 6, 1979 by the Secretary of Commerce and Resources.

(68) Amendment to Part V, section 5.12 as submitted on September 21, 1979 by the Secretary of Commerce and Resources.

(69) Amendments to Part I, section 1.02, Part II, sections 2.31, 2.33 (a) through (e), (g), (k), and (m), Part IV, Rule EX–4, section 4.41(b)(4), Part V, Rule NS–4, sections 5.42, 5.43, and 5.44, Part VIII, section 8.02 and Appendix L as submitted August 18, 1981 by the Secretary of Commerce and Resources.

(70) Revisions submitted on July 13, 1981 and August 10, 1981, pertaining to the Inspection and Maintenance Program in the Northern Virginia AQCR, by the Secretary of Commerce and Resources.

(71) Amendments to Part IV, Emission Standards for Open Burning (RULE EX–1), Section 4.11 to the Virginia Regulations for the Control and Abatement of Air Pollution, submitted on May 26, 1982 by the Commonwealth of Virginia.

(72) [Reserved]

(73) A revision submitted by the Commonwealth of Virginia on December 17, 1979 consisting of revisions to Chapter 3 of the Roanoke Plan and a revised Appendix P.

(74) Amendments to sections 1.02; 2.04(a); 2.14; 2.32(c); 2.33(j); 2.34(g); 4.02 (f) and (g); 4.54; 4.55; 4.56; 4.57; 4.94; 5.02(f); 8.02(o); and Appendix J, Part II, sections a.2. and d.2; submitted on December 27, 1982 by the Commonwealth of Virginia.

(75) Amendments to sections 4.56, 5.02(a), and 5.15; submitted on January 5, 1983 by the Commonwealth of Virginia.

(76) Amendments to section 4.51(b) of the Virginia Air Pollution Control Board Regulations submitted on September 20, 1978 by the Commonwealth of Virginia.

(77) [Reserved]

(78) The Washington Metropolitan Air Quality Plan for the Northern Virginia Nonattainment Area for Ozone and Carbon Monoxide Air Quality Standards submitted by the Virginia State Air Pollution Control Board on January 12, 1983.

(79) Amendments to Appendix I of the Virginia Regulations for the Control and Abatement of Air Pollution consisting of confirmation of local government commitments by Fairfax County and Loudoun County to implement the Northern Virginia nonattainment plan; submitted on December 3, 1982 by the Virginia State Air Pollution Control Board.

(80) [Reserved]

(81) Amendments to sections 1.02, 2.33, 4.02, and 5.02 of the Virginia Regulations for the Control and Abatement of Air Pollution submitted on January 24, 1983 by the Virginia State Air Pollution Control Board.

(82) Amendment for an alternate compliance schedule for the Ford Motor Company plant in Norfolk, Virginia submitted on December 30, 1982 by the Virginia State Air Pollution Control Board.

(83) Approval of an alternative emissions reduction plan for total suspended particulates at the Reynolds Aluminum Company's Bellwood reclamation facility located in Chesterfield County, Virginia submitted on April 1, 1983 by the Commonwealth of Virginia.

(84) A variance issued to the City of Portsmouth, exempting their Municipal Incinerator from Rule EX–7, section 4.71 for particulate emissions until February 15, 1985, submitted on May 6, 1983 by the Commonwealth of Virginia.

(85) Amendments to the Department of State Police Administrative and Procedural Regulations for the Motor Vehicle Inspection and Maintenance (I/M) Program submitted on December 29, 1982 by the Virginia State Air Pollution Control Board.

(86) Amendments to section 4.103 of the Virginia Regulations for the Control and Abatement of Air Pollution

submitted on June 5, 1984 by the Virginia State Air Pollution Control Board.

(87) A revision to the Virginia State Implementation Plan was submitted on December 17, 1984 by the Virginia State Air Pollution Control Board.

(i) Incorporation by reference.

(A) A letter dated November 29, 1984 from the Virginia State Air Pollution Control Board to the Ford Motor Company containing a compliance schedule for installing the electrophoretic deposition process (EDP) for prime coating operations at the Norfolk assembly plant, adopted on November 26, 1984.

(ii) Additional material.

(A) Technical Support Document dated November 26, 1985, prepared by the Virginia State Air Pollution Control Board.

(88) The repeal of §52.2420(c)(26) pertaining to a permit and emission offset for the Hampton Roads Energy Company's proposed refinery and terminal in Portsmouth, Virgina.

(89) Revisions to the Virginia Regulations for the Control and Abatement of Air Pollution were submitted on February 15, 1985 by the Commonwealth of Virginia:

(i) *Incorporation by reference.*

(A) Letter of February 15, 1985 from the Virginia State Air Pollution Control Board transmitting a recodification and restructuring of the Virginia Regulations for the Control and Abatement of Air Pollution.

(B) The following provisions of the Virginia regulations, effective February 1, 1985:

(1) Part I General Definitions

Sections 120–01–01, 120–01–02 (former sections 1.01, 1.02) (except for definitions of ''dispersion technique,'' ''excessive concentrations,'' ''good engineering practice (GEP) stack height,'' ''hazardous air pollutant,'' ''nearby,'' ''stationary source'' and ''variance'').

(2) Part II General Provisions

Sections 120–02–01 through 120–02–04 (former sections 2.01–2.04); 120–02–05A (former section 2.05A); 120–02–06 through 120–02–07 (former sections 2.06–2.07) 120–02–11, 120–02–14 (former sections 2.11, 2.14); 120–02–31, 120–02–32, and 120–02–34 (former sections 2.31, 2.32, 2.34).

NOTE: SIP Sections 2.09, 2.10, 2.12, and 2.30 have been redesignated as Sections 120–02–09, 120–02–10, 120–02–12, and 120–02–30 respectively. There are no wording changes. SIP Section 2.33 has been moved to Part VIII.

(3) Part III Ambient Air Quality Standards

Sections 120–03–01 through 120–03–05 (former sections 3.01–3.05), 120–03–07, 120–03–08 (former Sections 3.07–3.08)

(4) Part IV Emission Standards From Existing Sources

Sections 120–04–01 through 120–04–05 (except for sections 120–04–02.A.3. and 120–04–02I).

Rule 4–4, Sections 120–04–0401, 120–04–0402.A.–C. (definitions of ''heat input'' and ''rated capacity'' only), 120–04–0407, 120–04–0408, 120–04–0411 through 120–04–0417.

Rules 4–5, 4–6, 4–23, and 4–38 (except for sections within each rule pertaining to control of odors and noncriteria pollutants).

Rule 4–7 (except for sections 120–04–0706 through 120–04–0708).

Rule 4–8, Sections 120–04–0801, 120–04–0802.A.–C. (except for definitions of ''fuel burning equipment,'' ''fuel burning equipment installation,'' ''refuse derived fuel'' and ''total capacity''), 120–04–0805A. and B., 120–04–0807A., 120–04–0808, 120–04–0811 through 120–04–0817.

Rule 4–9, Sections 120–04–0901, 120–04–0902, 120–04–0909, 120–04–0910 (except for 120–04–0910.B.2.), 120–04–0911 through 120–04–0915.

Rule 4–10 (except for sections 120–04–1002.C., 120–04–1003, 120–04–1006, 120–04–1007).

Rule 4–11 (except for sections 120–04–1104, 120–04–1110, 120–04–1111, and the definition of ''gasoline'' in section 120–04–1102.C.).

Rule 4–12, Sections 120–04–1201, 120–04–1202.A.–C. (definition of ''chemical fertilizer'' only), 120–04–1204, 120–04–1205, 120–04–1208 through 120–04–120–04–1414.

Rule 4–13, Sections 120–04–1301, 120–04–1302.A. and B., 120–04–1305, 120–04–1306, 120–04–1309 through 120–04–1315.

Rule 4–14, Sections 120–04–1401, 120–04–1402.A. and B., 120–04–1404, 120–04–1405, 120–04–1408 through 120–04–1414.

Rule 4–15, Sections 120–04–1501, 120–04–1502.A. and B., 120–04–1504, 120–04–1505, 120–04–1508 through 120–04–1514.

Rule 4–16, Sections 120–04–1601, 120–04–1602.A. and B., 120–04–1605, 120–04–1606, 120–04–1609 through 120–04–1615.

Rule 4–17, Sections 120–04–1701, 120–04–1702.A. and B., 120–04–1704, 120–04–1705, 120–04–1708 through 120–04–1714.

Rule 4–18, Sections 120–04–1801, 120–04–1802.A.–C. (definition of ''melt time'' only), 120–04–1805, 120–04–1806, 120–04–1809 through 120–04–1815.

Rule 4–19, Sections 120–04–1901, 120–04–1902.A. and B., 120–04–1905, 120–04–1906, 1204–04–1909 through 120–04–1915.
Rule 4–20, Sections 120–04–2001, 120–04–2002.A.–C. (definition of ''production rate'' only), 120–04–2004, 120–04–2005, 120–04–2008 through 120–04–2014.
Rule 4–21, Sections 120–04–2101, 120–04–2102.A. and B., 120–04–2105, 120–04–2106, 120–04–2109 through 120–04–2115.
Rule 4–22 (except for sections 120–04–2203, 120–04–2206 and 120–04–2207).
Rule 4–24 (except for sections 120–04–2401.C., 120–04–2407, and 120–04–2408).
Rule 4–25 (except for sections 120–04–2501.C., 120–04–2507, and 120–04–2508).
Rule 4–26 (except for sections 120–04–2601.C., 120–04–2607, 120–04–2608, and 120–04–2609.B.).
Rule 4–27 (except for sections 120–04–2701.C., 120–04–2707, 120–04–2708, and 120–04–2709.B.).
Rule 4–28 (except for sections 120–04–2801.C., 120–04–2807, 120–04–2808, and 120–04–2809.B.).
Rule 4–29 (except for sections 120–04–2901.C., 120–04–2907, 120–04–2908, and 120–04–2909.B.).
Rule 4–30 (except for sections 120–04–3001.C., 120–04–3007, 120–04–3008, and 120–04–3009.B.).
Rule 4–31 (except for sections 120–04–3101.C., 120–04–3107, 120–40–3108, and 120–04–2609.B.).
Rule 4–32 (except for sections 120–04–3201.C., 120–04–3207, 120–04–3208, and 120–04–3209.B.).
Rule 4–33 (except for sections 120–04–3301.C., 120–04–3307, 120–04–3308, and 120–04–3309.B.).
Rule 4–34 (except for sections 120–04–3401.C., 120–04–3407, 120–04–3408, and 120–04–3409.B.).
Rule 4–35 (except for sections 120–04–3501.C., 120–04–3507, 120–04–3508, and 120–04–3509.B.).
Rule 4–36 (except for sections 120–04–3601.C., 120–04–3607, 120–04–3608, and 120–04–3609.B.).
Rule 4–37 (except for sections 120–04–3703.D.3.b., 120–04–3707, and 120–04–3708).
Rule 4–39 (except for sections 120–04–3906 and 120–04–3507).
Rule 4–40, Sections 120–04–4001.A. and B., 120–04–4002.A., B., C. (definitions of ''refuse'' and ''household refuse'' only).
Rule 4–41, Sections 120–04–4101, 120–04–4102, 120–04–4103.C., 120–04–4104, and 120–04–4105.

Deletion of Rule EX–8

NOTE: (1) All sections within each rule pertaining to control odors and noncriteria pollutants are not part of the SIP.

(2) Emission standards for hydrogen sulfide (sections 120–04–0406, 120–04–1105), total reduced sulfur (section 120–04–1304), and sulfuric acid mist (section 120–04–2104) are currently not part of the SIP.

(3) Section 120–04–3703D.3.b. (former section 4.56(e)(3)(ii)) pertaining to monthly throughput exemptions for gasoline bulk plants is not an approved part of the SIP.

(5) Part V Emission Standards for New and Modified Sources

Sections 120–05–01 through 120–05–05 (except for section 120–05–02.H.).
Rule 5–1, Sections 120–05–0101, 120–05–0102.A., B., C. (definition of ''opacity'' only), 120–05–0104 through 120–05–0107.
Rule 5–4 (except for sections 120–05–0408 and 120–05–0409).

NOTE: All sections within each rule pertaining to odors and noncriteria pollutants are not part of the SIP.

(6) Part VII Air Pollution Episodes

Sections 120–07–01, 120–07–02 (added).
Sections 120–07–03 through 120–07–07 (revised) (former Sections 7.01–7.05).

(7) Part VIII Permits for New and Modified Sources

Section 120–08–01.A., B. (except for definitions of ''allowable emissions,'' ''potential to emit,'' ''secondary emissions,'' and ''stationary source''), C. (except for C.1.b.), D. through G., and I. through M. (former section 2.33).

Section 120–08–03.A., B. (except for definitions of ''allowable emissions,'' ''building, structure, or facility,'' ''net emissions increase,'' ''potential to emit,'' ''secondary emissions,'' and ''stationary source''), C. through G. (except for F.1.), and I. through P. (former section 8.02).

NOTE: Sections pertaining to sources of hazardous pollutants (sections 120–08–01C.1.b., 120–08–01H.2., 120–08–03C.1.b., and 120–08–03H.2) are not part of the SIP.

(8) Appendices

A, D, F, G, J, K, N, P (Revised)
New E (Added)
B, H—No Change
Old E—Deleted

(ii) *Additional material.*

(A) Remainder of February 15, 1985 State submittal.

(B) Letter with attachments from the Virginia State Air Pollution Control Board (VSAPCB) to U.S. EPA Region III; June 21, 1985.

(C) Letter from VSAPCB to U.S. EPA Region III; September 5, 1985.

(D) Letter with attachments VSAPCB to U.S. EPA Region III; August 7, 1986.

(90) Revisions to the State Implementation Plan submitted by the Virginia Department of Air Pollution Control on February 14, 1985.

(i) Incorporation by reference.

(A) Letter from the Virginia Department of Air Pollution Control dated February 14, 1985 submitting a revision to the Virginia State Implementation Plan.

(B) The following provisions of the Virginia regulations, effective February 1, 1985:

(1) Part IV—Emission Standards From Existing Sources

''Rule 4–1, sections 120–04–0101 through 120–04–0107; deletion of the definitions of ''fumes'' and ''mist''.

Rule 4–4, sections 120–04–0402.C. (definitions of ''combustion installation,'' ''combustion unit,'' ''manufacturing operation,'' ''materials handling equipment,'' ''physically connected,'' ''process operation,'' ''process unit,'' ''process weight,'' ''process weight rate,'' and ''total capacity'' only), 120–04–0403, 120–04–0404.

Rule 4–7, sections 120–04–0702.C., 120–04–0703, 120–04–0708.

Rule 4–8, sections 120–04–0802.C. (definitions of ''fuel burning equipment,'' ''fuel burning equipment installation,'' ''refuse derived fuel,'' and ''total capacity'' only), 120–04–0803, 120–04–0804, 120–04–0805, 120–04–0807B, Figures 4–8A, 4–8B.

Rule 4–9, section 120–04–0903.C.

Rule 4–10, sections 120–04–1002.C., 120–04–1003.

Rule 4–12, sections 120–04–1202.C. (definitions of ''manufacturing operation,'' ''materials handling equipment,'' ''physically connected,'' ''process operation,'' ''process unit,'' ''process weight,'' and ''process weight rate'' only), 120–04–1203.

Rule 4–13, sections 120–04–1302.C. (definitions of ''cross recovery furnace,'' ''kraft pulp mill,'' ''lime kiln,'' ''recovery furnace,'' ''smelt dissolving tank,'' and ''straight kraft recovery furnace'' only), 120–04–1303, 120–04–1305.

Rule 4–14, sections 120–04–1402.C., 120–04–1403.

Rule 4–15, sections 120–04–1502.C. (except for definition of ''coal preparation plant''), 120–04–1503; deletion of the definition ''air table.''

Rule 4–16, sections 120–04–1602.C., 1120–04–1603.

Rule 4–17, sections 120–04–1702.C., 120–04–1703.

Rule 4–18, sections 120–04–1802.C. (definitions of ''aluminum production operation,'' ''brass or bronze,'' ''brass or bronze production,'' ''ferroalloy production operation,'' ''gray iron foundry operation,'' ''lead,'' ''magnesium product operation,'' ''primary copper smelter,'' ''primary lead smelter,'' ''primary metal operation,'' ''primary zinc smelter,'' ''secondary lead production operation,'' ''secondary metal operation,'' ''steel foundry operation,'' and ''zinc processing operation'' only), 120–04–1803.

Rule 4–19, sections 120–04–1902.C., 120–04–1903.

Rule 4–20, sections 120–04–2002.C., 120–04–2003.

(2) Part V—Emission Standards for New and Modified Sources

Rule 5–1, sections 120–05–0102.C. (definitions of ''fugitive dust,'' ''fugitive emissions,'' and ''six minute period'' only), 120–05–0103, 120–05–0104.

(3) Appendix Q

(ii) Additional materials.

(A) Remainder of the February 14, 1985 submittal.

(B) Letters of June 21, 1985 and September 5, 1985 from the Virginia State Air Pollution Control Board to EPA.

(91) Revisions to the State Implementation Plan for the good engineering practice (GEP) stack height requirements submitted on May 12, 1986 by the Virginia State Air Pollution Control Board:

(i) Incorporation by reference.

(A) Letter of May 12, 1986 from the Executive Director, Virginia State Air Pollution Control Board, transmitting the revised good engineering practice (GEP) stack heights requirements.

(B) Revised Regulations 120–01–02 (Revised definitions of dispersion technique, elevated terrain, Excessive Concentrations, GEP Stack Height, Nearby, Stack, Stack in Existence), 120–04–02I, and 120–04–02H of the Virginia Regulations for the Control and Abatement of Air Pollution, adopted April 7, 1986, and effective June 6, 1986.

(C) Deletion of the following definitions from Regulation 120–01–02: Elevated Terrain, Plume Impaction

(ii) Additional material.

(A) Remainder of the official State submittal, transmitted on May 16, 1986.

(92) Revisions to the State Implementation Plan submitted by the Virginia Department of Air Pollution Control regarding non-CTG RACT requirements for aluminum rolling mills applicable to Reynolds Metals in Richmond, Virginia on December 17, 1987.

(i) Incorporation by reference.

(A) Letter from the Virginia Department of Air Pollution Control dated December 17, 1987 submitting a revision to the Virginia State Implementation Plan.

(B) Consent Agreement and Order (DSE–597–87) between the Virginia State Air Pollution Control Board and

Reynolds Metals Company dated December 21, 1987 and effective May 1, 1988.

(ii) Additional materials.

(A) Letter dated May 4, 1988 from James E. Sydnor, Assistant Executive Director, Programs, VASAPCB to Jesse Baskerville, EPA Region III responding to EPA's comments submitted for the public hearing on November 9, 1987 regarding the Reynolds RACT determination.

(B) Technical Support Document prepared by Reynolds Metals Company, dated September 30, 1987.

(93) Revisions to the State Implementation Plan submitted by the Virginia Department of Air Pollution Control on March 26, 1991.

(i) Incorporation by reference.

(A) Letter from the Virginia Department of Air Pollution Control dated March 26, 1991 submitting a revision to the Virginia State Implementation Plan.

(B) Agreement between the State Air Pollution Control Board of the Commonwealth of Virginia and the Aqualon Company (Source Registration No. 50363) reducing allowable emissions of sulfur dioxide, dated September 24, 1990 and September 26, 1990.

(ii) Additional materials.

(A) Remainder of the State Implementation Plan revision request submitted by the Virginia Department of Air Pollution Control on March 26, 1991.

(94) Addition of Section 120–08–04 (Permits—operating) to Part VIII of the Virginia Regulations for the Control and Abatement of Air Pollution submitted on July 18, 1991 by the Virginia Department of Air Pollution Control:

(i) *Incorporation by reference.*

(A) Letter of July 18, 1991 from the Virginia Department of Air Pollution Control transmitting a revision to the Virginia State Implementation Plan.

(B) Regulation 120–08–04 (Permits—operating) of Part VIII, Virginia Regulations for the Control and Abatement of Air Pollution, effective July 1, 1991.

(ii) *Additional material.*

(A) Remainder of July 18, 1991 State submittal.

(95) Revisions to the State Implementation Plan submitted by the Virginia Department of Air Pollution Control on April 29, 1991.

(i) Incorporation by reference.

(A) Letter from the Virginia Department of Air Pollution Control dated April 29, submitting a revision to the Virginia State Implementation Plan.

(B) Consent Agreement and Order No. DTE–179–91 between Nabisco Brands, Inc. and the Virginia State Air Pollution Control Board, effective on April 24, 1991.

(ii) Additional materials.

(A) Technical Support Document for the RACT Determination for Nabisco Brands, Inc., Henrico County, VA; Consent Agreement and Order No. DTE–179–91.

(96) Revisions to the State Implementation Plan submitted by the Virginia Department of Air Pollution Control on December 16, 1991.

(i) *Incorporation by reference.* (A) Letter from the Virginia Department of Air Pollution Control dated December 6, 1991 submitting a revision to the Virginia State Implementation Plan.

(B) Agreement between the State Air Pollution Control Board of the Commonwealth of Virginia and Burlington Industries (Source Registration No. 30401) reducing allowable emissions of sulfur dioxide, dated November 19, 1991.

(ii) *Additional materials.* (A) Remainder of the State Implementation Plan revision request submitted by the Virginia Department of Air Pollution Control on December 16, 1991.

(97) Revision to the State Implementation Plan submitted by the Virginia Department of Air Pollution Control on September 28, 1989.

(i) Incorporation by reference.

(A) Letter from the Virginia Department of Air Pollution Control dated September 28, 1989 submitting a revision to the Virginia State Implementation Plan.

(B) ''Regulation for the Control of Motor Vehicle Emissions'' (VR 120–99–01), as published in The Virginia Register of Regulations (Monday, July 31, 1989—Volume 5, Issue 22), with an effective date of October 1, 1989.

(C) ''Regulation for Vehicle Emission Control Program Analyzer Systems'' (VR 120–99–02), as published in The Virginia Register of Regulations (Monday, November 21, 1988—Volume 5, Issue 4),

with an effective date of January 1, 1989.

(ii) Additional materials.

(A) The remainder of the State submittal.

(98) Revisions to the State Implementation Plan submitted by the Virginia Department of Air Pollution Control on February 14, 1985.

(i) Incorporation by reference.

(A) Letter from the Commonwealth of Virginia dated February 14, 1985, submitting a revision to the Virginia State Implementation Plan.

(B) The following provisions of the Virginia Regulations for the Control and Abatement of Air Pollution, effective February 1, 1985:

(*1*) Part I General Definitions.

Section 120–01–02 (Definition of ''variance'').

(*2*) Part IV Emission Standards from Existing Sources.

Rule 4–4, Section 120–04–0405.
Rule 4–8, Section 120–04–0806.
Rule 4–9, Section 120–04–0904.
Rule 4–11, Section 120–04–1104.
Rule 4–15, Section 120–04–1503C. (Definition of ''coal preparation plant'')
Rule 4–16, Section 120–04–1604.
Rule 4–18, Section 120–04–1804.
Rule 4–19, Section 120–04–1904.
Rule 4–21, Sections 120–04–2102C. (Definition of ''sulfuric acid production unit'') and 120–04–2103.
Rule 4–22, Section 120–04–2203.

Deletion of Section 4.50 of the Virginia Regulations for the Control and Abatement of Air Pollution in effect before February 1, 1985.

(ii) Additional material.

(A) Remainder of the February 14, 1985, State submittal pertaining to: The revised definitions of ''variance,'' ''coal preparation plant,'' and ''sulfuric acid production unit''; and Virginia's revised sulfur dioxide provisions.

(B) Letter dated July 14, 1986, from the Virginia State Air Pollution Control Board to EPA.

(99) Revisions to the Commonwealth of Virginia Regulations Volatile organic compound (VOC) RACT Fix-up regulations submitted on May 10, 1991, by the Department of Environmental Quality formerly the Virginia Department of Air Pollution Control: Effective date July 1, 1991.

(i) Incorporation by reference.

(A) Letter of May 10, 1991, from the Department of Environmental Quality transmitting VOC RACT Fix-up regulations.

(B) The following Commonwealth of Virginia regulations effective July 1, 1991:

(*1*) Part I; section 120–01–02 (revised definition of ''actual emissions rate'', ''department'', ''emissions unit'', ''volatile organic compound'')

(*2*) Part II sections:

120–02–08 A., B.
120–02–34 C., J.

(*3*) Part IV sections:

120–04–01 B., C.
120–04–02 C., D., F., H.
120–04–03 A.
120–04–04 F.
120–04–05 E., F., G.

Rule 4–4 sections:

120–04–0402 (definition of ''combustion unit'', ''manufacturing operation'', ''reasonably available control technology'')
120–04–0407 A., B., C.
sections 120–04–0407 through 120–04–0408 have been renumbered to 120–04–0408 through 120–04–0409; sections 120–04–0411 through 120–04–0416 have been renumbered to 120–04–0412 through 120–04–0417, section 120–04–0417 has been renumbered to 120–04–0418.

Rule 4–5 sections:

120–05–0501 B.
120–05–0503 A.1., B.1., C.1., C.2., D.1.
120–05–0504 A.2., B.4., B.5., C.4., D.1.e.

Rule 4–6 sections:

120–04–0601 B.
120–04–0603 A.1., B.1.,C.1., D.1.
120–04–0604 A.2., A.3., B.3., B.4.

Rule 4–11 sections:

120–04–1102 (revised definition of ''condensate crude oil'')
120–04–1106 A.1., B.1., C.1., C.2., D.
120–04–1107 B.3.

Rule 4–24 sections:

120–04–2401 A., B., C (deleted)
120–04–2403 A.1., B.1., C.1.
120–04–2404 A.1.a.3., B.1.c.5., C.1.e.5.

Rule 4–25 sections:

120–04–2501 A., B., C.
120–04–2503 A.1., A.3., B.1., B.3., B.4., C.1., C.3.
120–04–2504 A.2., B.1.b., C.1.b.

Rule 4–26 sections:

120–04–2601 C. (deleted)
D. (replaces previous C.)
120–04–2602 (new definition for ''coating application system'', and ''oven'')
120–04–2603 A. (introduction revised), A.1., B. (introduction revised), B.1., D.
120–04–2604 A.6., A.7., B.5., B.6.
120–04–2609 B., C.

Rule 4–27 sections:

120–04–2701 A., B., C. (deleted), D. (renumbered C.)

120–04–2702 C. (added definitions for ''coating application system''; deleted definition for ''coating line''; modified definition for ''oven'')

120–04–2703 A., C.

120–04–2704 (introduction revised), C., D.

120–04–2709 B., C.

Rule 4–28 sections:

120–04–2801 A., B., C. (deleted), D. (renumbered C.)

120–04–2802 C. (added definition for ''anti-chip coating'', ''clear coating'', ''coating application system'', ''electrocoat primer'', ''extreme environmental conditions'', ''extreme performance coatings'', ''guidecoat'', ''topcoat'', modified definitions for: ''automobile'', ''light-duty truck'' and deleted definition for ''coating line''

120–04–2803 A.1., B. (added in its entirety), C., D., E., F., and G. (formerly B., C., D., E., F., now revised/renumbered).

120–04–2804 A., A.5., A.6., B. (added), C., D., E., (formerly B., C., D., have been revised/renumbered).

120–04–2809 B., C.

Rule 4–29 sections:

120–04–2901 A., B., C. (deleted), D. (renumbered/revised to C.)

120–04–2902 C., (deleted definition of ''coating line'', addition of definition for ''coating application system'', definition modified ''oven'')

120–04–2903 A.1., B.1., C.1., D.1., E.

120–04–2904 A. (introduction revised), A.5., A.6., B. (introduction revised). B.5., B.6., C. (introduction revised), C.4., D.

120–04–2909 B., C.

Rule 4–30 sections:

120–04–3001 A., B., C. (revised) and D. (deleted), C.2.,

120–04–3002 C. (deleted definition of ''coating line'', added definition of ''coating application system'', modified definition of ''oven'')

120–04–3003 A., C.

120–04–3004 (introduction revised), D., E.

120–04–3009 B., C.

Rule 4–31 sections:

120–04–3101 A., B., C. (deleted), D. (revised/renumbered C.)

120–04–3102 C. (deleted definition of ''coating line''; added definition of ''coating application system''; modified definition of ''oven'', and ''fabric coating'').

120–04–3103 A., D., E. (added)

120–04–3104 (introduction revised), F.

120–04–3109 B., C. (added)

Rule 4–32 sections:

120–04–3201 A., B., C. (deleted), D. (revised/renumbered C.)

120–04–3202 C. (deleted definitions for ''coating line''; added definition of ''coating application system''; modified definition of ''oven''.)

120–04–3203 A., C.

120–04–3204 (introduction revised), D., E.

120–04–3209 B., C. (added)

Rule 4–33 sections:

120–04–3301 A., B., C. (deleted), D. (renumbered/revised C.)

120–04–3302 C. (deleted definitions of ''coating line''; added definition of ''coating application system''; modified definition of ''oven''.)

120–04–3303 A., C. (added)

120–04–3304 (introduction revised), F., G.

120–04–3309 B., C. (added)

Rule 4–34 sections:

120–04–3401 B., C., D.1.b., D.4.

120–04–3402 (modified definitions of ''coating application system'', ''clear coating'', extreme performance coatings'', and ''oven''), G.

120–04–3403 D. (added)

120–04–3404 (introduction revised) F., G.

120–04–3409 B., C. (added)

Rule 4–35 sections:

120–04–3501 A., B., C. (deleted), D. (revised/renumbered as C.)

120–04–3502 (modified definitions of ''coating application system'' and ''oven''.)

120–04–3503 D. (added)

120–04–3504 (introduction revised), F., G.

120–04–3509 B., C.

Rule 4–36 sections:

120–04–3601 B., C., D.1.b., D.2. (deleted), D.3. (revised/renumbered D.2.)

120–04–3602 C. (added definitions for ''high-solids ink'', ''low-solvent ink'', ''printing process'', modified definition of ''publication rotogravure printing'' and ''water-borne inks.'')

120–04–3603 (the following were deleted: A., B., C.), A. (new/revised), B. (formerly D., modified), C. (formerly E. was modified)

120–04–3604 deleted

120–04–3609 B.

Rule 4–37 sections:

120–04–3701 A., B.

120–04–3702 (modified definitions of ''crude oil'' and ''custody transfer''.)

120–04–3703 A.1., A.3., A.4. (added), B.1., D.3., E.1., E.3.a. through E.3.d. was revised to E.3.a. through E.3.b.; revisions were made to the following: F.1., F.3., F.8., F.10., F.11., F.16. (deleted)

120–04–3704 A.1.b., B.1.b., C.1.d., D.1.c., E.2.c.

Rule 4–38 section:

120–04–3801 B.

Rule 4–39 section:

120–04–3901 B.

(*4*) Part V sections:

120–05–01 the following were added: C. and D.

120–05–02 the following were revised: C., D., F.; G. (deleted)
120–05–03 A.
120–05–04 A. and F. were revised.
120–05–05 the following were added: E. and F. H. (formerly F. renumbered)

(*5*) Part VII sections:

120–07–01
120–07–02 C. (modified definition of ''air pollution episode'')
120–07–04 B.1., B.1.b., B.2.a., B.3.a., B.4.a., B.5.a.

(*6*) Appendix K
(*7*) Appendix N
(*8*) Appendix P
(*9*) Appendix R I., II.B., II.D., II.E., II.F., II.G., II.H., II.I., II.J., II.K., II.L., II.M., II.N., II.O., II.P., III.V. (deleted), VI., VIII.
(*10*) Appendix S (revised and renamed in its entirety to include other appendices)
(*11*) Appendix T (deleted in its entirety and revised to be included in new appendix S.)

(ii) Additional material.

(A) Remainder of May 10, 1991, Commonwealth's submittal.

(100) Revisions to the Commonwealth of Virginia Regulations Oxygenated Gasoline Program regulations submitted on November 1, 1993, by the Department of Environmental Quality, formerly the Virginia Department of Air Pollution Control: Effective date November 1, 1993.

(i) Incorporation by reference.

(A) Letter of November 1, 1993, from the Department of Environmental Quality transmitting Oxygenated Gasoline Program regulations.

(B) Addition of VR 115–04–28 Regulation Governing the Oxygenation of Gasoline.

(ii) Additional materials.

(A) Remainder of November 13, 1992, and November 1, 1993, State submittals.

(101) Revisions to the Virginia regulation for the control of volatile organic compounds emitted from petroleum liquid storage and transfer operations, primarily related to the addition of Stage II vapor recovery equipment on gasoline refueling equipment, as submitted on November 5, 1992 by the Virginia Department of Air Pollution Control (now the Virginia Department of Environmental Quality).

(i) Incorporation by reference.

(A) Letter of November 5, 1992, from the Virginia Department of Air Pollution Control requesting approval of revisions to the Commonwealth's State Implementation Plan's requirements for volatile organic compounds from petroleum liquid storage and transfer operations, primarily concerning the addition of provisions for Stage II vapor recovery systems.

(B) Virginia Regulation VR 120–01, Part IV (Rule 4–37), with an effective date of January 1, 1993.

(C) Appendix S to VR 120–01, Part IV (Rule 4–37), having an effective date of January 1, 1993.

(D) Virginia Department of Air Pollution Control's Air Quality Program Policies and Procedures document entitled ''Procedures for Implementation of Regulations Covering Stage II Vapor Recover Systems for Gasoline Dispensing Facilities'' (AQP–9). The effective date of this document is January 1, 1993.

(ii) Additional material.

(A) Remainder of November 5, 1992, State submittal.

(B) Letter dated August 18, 1993, from the Virginia Department of Environmental Quality transmitting Virginia's request that section III.F.2 of Virginia's policies and procedures document entitled ''Procedures for Implementation of Regulations Covering Stage II Vapor Recover Systems for Gasoline Dispensing Facilities'' (AQP–9) be included in the Commonwealth's State Implementation Plan.

(102) Revisions to the Virginia State Implementation Plan submitted on November 4, 1992 by the Virginia Department of Air Pollution Control.

(i) Incorporation by reference.

(A) Letter of November 4, 1992 from the Virginia Department of Air Pollution Control transmitting amendments to the Virginia State Implementation Plan pertaining to Virginia's air quality regulations, Virginia State Air Pollution Control Board Regulations for the Control and Abatement or Air Pollution.

(B) The following revisions to Virginia's air quality regulations, adopted by the Virginia State Air Pollution Control Board on October 30, 1992, effective January 1, 1993:

(*1*) Amendments to section 120–01–02, the definition for the term volatile organic compound.

(*2*) Amendments to appendix P, pertaining to emission control areas.

(ii) Additional material.

(A) Remainder of Virginia's November 4, 1992 State submittal pertaining to section 120–01–02 and appendix P.

(103) Revisions to the Commonwealth of Virginia Regulations State Implementation Plan submitted on November 4, 1992 by the Virginia Department of Environmental Quality:

(i) Incorporation by reference.

(A) Letter of November 4, 1992 from the Virginia Department of Environmental Quality transmitting a revised regulation to require owners of stationary sources in emissions control areas to submit emission statements annually.

(B) Amendments to Title VR 120–01, addition of paragraph B to section 120–02–31 and the addition of Appendix S including referenced document AQP–8, procedures for Preparing and submitting Emission Statements for Stationary Sources. Effective on January 1, 1993.

(ii) Additional Material.

(A) Remainder of November 4, 1992 State submittal related emission statements.

(104) Revisions to the Virginia Regulations for the Control and Abatement of Air Pollution submitted on February 14, 1985 by the Virginia Department of Air Pollution Control:

(i) Incorporation by reference.

(A) Letter of February 14, 1985 from the Virginia Department of Air Pollution Control transmitting a revision to the Virginia State Implementation Plan.

(B) The following provisions of the Virginia regulations, effective February 1, 1985:

(*1*) Revisions to Part IV, Rule 4–41 (Mobile Sources), Sections 120–04–4103A. and 120–04–4103B.

(*2*) Deletion of SIP Regulation 4.52.

(ii) Additional material.

(A) Remainder of February 14, 1985 State submittal pertaining to the revised provisions of Section 120–04–4103 and the deletion of SIP regulation 4.52.

(105) Revisions to the Virginia Regulations For the Control and Abatement of Air Pollution submitted on April 12, 1989 by the Virginia Department of Air Pollution Control:

(i) Incorporation by reference.

(A) Letter from the Virginia Department of Air Pollution Control dated April 12, 1989 submitting a revision to the Virginia State Implementation Plan.

(B) The following provisions of the Virginia regulations, effective October 1, 1986.

(*1*) Part I Definitions. Section 1.02 (Definitions of ''Reference method,'' ''Reid vapor pressure,'' ''Stationary source,'' ''True vapor pressure'' and ''Vapor pressure'').

(*2*) Part IV Emission Standards from Existing Sources.

Rule 4–5, Sections 120–08–0502C. (Definitions of ''Condenser,'' ''Production equipment exhaust system,'' ''Reactor'' and ''Synthesized pharmaceutical products manufacturing'') and 120–04–0504C.3.b. (Control Technology Guidelines)

Rule 4–21, Sections 120–04–2102C. (Definitions of ''Sulfuric acid mist'' and ''Sulfuric acid production unit'') and 120–04–2110E. (Monitoring)

Rule 4–34, Section 120–04–3402C. (Definitions of ''Application area,'' ''Carbon adsorption system,'' ''Coating applicator,'' ''Extreme environmental conditions,'' ''Flashoff area,'' ''Miscellaneous metal parts and products'' and ''Major groups'')

Rule 4–37, Sections 120–04–3702C. (Definitions of ''Bulk gasoline plant,'' ''Bulk gasoline terminal,'' ''Condensate,'' ''External floating roof,'' ''Gasoline,'' ''Gasoline dispensing facility,'' ''Internal floating roof,'' ''Liquid-mounted,'' ''Petroleum liquids,'' ''Petroleum refinery,'' ''Submerged fill pipe,'' ''vapor-mounted,'' ''Vapor tight'' and ''Waxy, heavy pour crude oil'') and 120–04–3704C.2.b (Control Technology Guidelines)

Rule 4–41, Sections 120–04–4102C. (Definitions of ''Mobile source'' and ''Motor vehicle'') and 120–04–4105B.2. (Export/Import of Motor Vehicles)

(*3*) Part VIII Permits.

Section 120–08–01 (Permits—New and Modified Stationary Sources), subsections 120–08–01B3. (definitions of ''Allowable emissions,'' ''Begin actual construction,'' ''Commence,'' ''Construction,'' ''Emissions units,'' ''Federally enforceable,'' ''Fixed capital cost,'' ''Major modification,'' ''Major stationary source,'' ''Modification,'' ''Modified source,'' ''Necessary preconstruction approvals or permits,'' ''New source,'' ''Potential to emit,'' ''Public comment period,'' ''Reactivation,'' ''Reconstruction,'' ''Secondary emissions,'' ''State enforceable,'' ''Stationary source''

and ''Uncontrolled emission rate'') and 120–08–01C.4.d. (General)

Section 120–08–03 (Permits—Major Stationary Sources and Major Modifications Locating in Nonattainment Areas), subsections 120–08–03B.3. (all terms) and 120–08–03N.7. (Offsets)

(ii) Additional material.

(A) Remainder of February 12, 1989 State submittal pertaining to the revised provisions of Parts I, IV and VIII.

(106) [Reserved]

(107) The carbon monoxide redesignation and maintenance plan for the Counties of Arlington and Alexandria, Virginia submitted by the Virginia Department of Environmental Quality on October 4, 1995, as part of the Virginia SIP. The emission inventory projections are included in the maintenance plan.

(i) Incorporation by reference.

(A) Letter of October 4, 1995 from the Virginia Department of Environmental Quality requesting the redesignation and submitting the maintenance plan.

(B) Maintenance Plan for the Virginia portion of the Metropolitan Washington Carbon Monoxide Nonattainment Area adopted on September 20, 1995.

(ii) Additional material.

(A) Remainder of October 4, 1995 State submittal.

(108)–(109) [Reserved]

(110) Alternative Compliance Plans submitted on November 4, 1986 by the Virginia State Air Pollution Control Board:

(i) Incorporation by reference.

(A) Letter of November 4, 1986 from the Virginia State Air Pollution Control Board transmitting alternative compliance plans for the Reynolds Metals—Bellwood and South Plants, Richmond, Virginia.

(B) The below-described Consent Agreements and Orders between the Commonwealth of Virginia and the Reynolds Metals Company, effective October 31, 1986:

(*1*) DSE–413A–86—Consent Agreement and Order Addressing Reynolds Metals Company's Bellwood Printing Plant (Registration No. 50260).

(*2*) DSE–412A–86—Consent Agreement and Order Addressing Reynolds Metals Company's Richmond Foil Plant (Registration No. 50534).

(ii) Additional material.

(A) Remainder of November 4, 1986 State submittal.

(B) Letter of February 12, 1987 from the Virginia State Air Pollution Control Board.

[37 FR 10899, May 31, 1972]

EDITORIAL NOTE: For FEDERAL REGISTER citations affecting § 52.2420, see the List of CFR Sections Affected in the Finding Aids section of this volume.

EFFECTIVE DATE NOTE: At 61 FR 29965, June 13, 1996, § 52.2420 was amended by adding paragraph (c)(110), effective July 29, 1996.

§ 52.2421 Classification of regions.

The Virginia plan was evaluated on the basis of the following classifications:

Air quality control region	Pollutant				
	Particulate matter	Sulfur oxides	Nitrogen dioxide	Carbon monoxide	Photochemical oxidants (hydrocarbons)
Eastern Tennessee-Southwestern Virginia Interstate	I	I	III	III	III
Valley of Virginia Intrastate	I	III	III	III	III
Central Virginia Intrastate	I	III	III	III	III
Northeastern Virginia Intrastate	IA	III	III	III	III
State Capital Intrastate	I	III	III	III	I
Hampton Roads Intrastate	I	II	III	III	I
National Capital Interstate	I	I	III	I	I

[37 FR 15090, July 27, 1972, as amended at 39 FR 16347, May 8, 1974]

§ 52.2422 [Reserved]

§ 52.2423 Approval status.

(a) With the exceptions set forth in this subpart, the Administrator approves Virginia's plan for the attainment and maintenance of the national standards. The State included a provision dealing with open burning in its submittal of August 10, 1973. This provision was included for information purposes only and was not to be considered a part of the plan to implement national standards. Accordingly, this additional provision is not considered a part of the applicable plan.

(b)–(c) [Reserved]

(d) The portion of the January 11, 1979 SIP submittal pertaining to Smyth County is not approved, pending a possible redesignation of the area to attainment status.

(e) The requirements of § 51.22 are not met with respect to section 4.55(b) of the Virginia regulations, because the regulation is not adequately enforceable. Therefore, section 4.55(b) is disapproved.

(f) Section 120–04–02.A.3. of the Virginia Regulations for the Control and Abatement of Air Pollution is not considered part of the applicable plan because it contradicts a previously approved section of the SIP.

(g) Section 4.31(d)(3) of Part IV of the Virginia Regulations for the Control and Abatement of Air Pollution is not considered part of the applicable plan because the substitute criteria, listed in section 4.31(d)(3), contain inherent variations in quality control which do not present an accurate representation of collection efficiency.

(h) In an April 19, 1991 request submitted by the Virginia Department of Air Pollution Control, the source-specific emission limitation for James River Paper which EPA had approved on August 18, 1983 is deleted. James River Paper Co. (now known as Custom Papers Group—Richmond, Inc.) located in Richmond, Virginia is now required to comply with the applicable Virginia SIP paper coating regulation.

(i) Pursuant to an October 31, 1991 request submitted by the Virginia Department of Air Pollution Control, the source-specific Alternate Control Program (bubble) for J.W. Fergusson & Sons, Inc. which EPA had approved on March 4, 1983, is removed from the plan. J.W. Fergusson & Sons, Inc. located in Richmond, Virginia is required to comply with the Virginia SIP graphic arts RACT regulation approved by EPA on January 25, 1984 (see 40 CFR 52.2420(c)(48) and (c)(74)).

(j) Letter of January 25, 1993, from the Commonwealth of Virginia transmitting a commitment to adopt either the Federal clean fuel fleet program or an alternative substitute program by May 15, 1994.

(k) The maintenance plan SIP revision, and request to redesignate the Richmond moderate ozone nonattainment area to attainment were submitted on November 12, 1992, by the Department of Environmental Quality. These requests are disapproved because review of the 1993 ambient air quality data monitored during the 1993 ozone season indicated that a violation of the ozone NAAQS occurred at the Charles City monitor in the Richmond nonattainment area . Because of the registered violation during the 1993 ozone season, the underlying basis of the Commonwealth's November 12, 1992, maintenance plan's demonstration is no longer valid.

(l) [Reserved]

(m) EPA approves as part of the Virginia State Implementation Plan the documents listed in Appendix M, Sections II.A. through II.E and Section II.G. of the Virginia Regulations for the Control and Abatement of Air Pollution submitted by the Virginia Department of Air Pollution Control on April 12, 1989.

(n) EPA approves as part of the Virginia State Implementation Plan the revised references to the documents listed in Appendix M, Sections II.A. and II.B. of the Virginia Regulations for the Control and Abatement of Air Pollution submitted by the Virginia Department of Air Pollution Control on February 12, 1993.

[38 FR 33724, Dec. 6, 1973, as amended at 39 FR 41254, Nov. 26, 1974; 45 FR 85749, Dec. 30, 1980; 46 FR 22583, Apr. 20, 1981; 57 FR 3011, Jan. 27, 1992; 57 FR 27182, June 18, 1992; 58 FR 11377, Feb. 25, 1993; 58 FR 50848, Sept. 29, 1993; 59 FR 22758, May 3, 1994; 60 FR 43717, Aug. 23, 1995; 61 FR 16062, Apr. 11, 1996]

§52.2424 [Reserved]

§52.2425 1990 Base Year Emission Inventory for Carbon Monoxide.

EPA approves as a revision to the Virginia Implementation Plan the 1990 base year emission inventory for the Washington Metropolitan Statistical Area, submitted by Director, Virginia Department of Environmental Quality, on November 1, 1993, April 3, 1995 and October 12, 1995. This submittal consist of the 1990 base year stationary, area and off-road mobile and on-road mobile emission inventories in the Washington Statistical Area for the pollutant, carbon monoxide (CO).

[61 FR 2937, Jan. 30, 1996]

§52.2426 Photochemical Assessment Monitoring Stations (PAMS) Program.

On November 23, 1994 Virginia's Department of Environmental Quality submitted a plan for the establishment and implementation of a Photochemical Assessment Monitoring Stations (PAMS) Program as a state implementation plan (SIP) revision, as required by section 182(c)(1) of the Clean Air Act. EPA approved the Photochemical Assessment Monitoring Stations (PAMS) Program on September 11, 1995 and made it part of the Virginia SIP. As with all components of the SIP, Virginia must implement the program as submitted and approved by EPA.

[60 FR 47084, Sept. 11, 1995]

§52.2427 Source surveillance.

(a)—(b) [Reserved]

(c) The requirements of §51.213 of this chapter are not met because the plan does not provide procedures for determining actual emission reductions achieved as a result of implementing the proposed transportation control measures. Rectifying provisions are promulgated in this section.

(d) *Monitoring transportation sources.* (1) This section is applicable to the Commonwealth of Virginia.

(2) In order to assure the effectiveness of the inspection and maintenance program approved in §52.2423 and required by §52.2441, and the retrofit devices required under §§52.2444, 52.2445, 52.2446, and 52.2447 the Commonwealth shall monitor the actual per-vehicle emissions reductions occurring as a result of such measures. All data obtained from such monitoring shall be included in the quarterly report submitted to the Administrator by the Commonwealth of Virginia in accordance with §58.35 of this chapter. The first quarterly report shall cover the period January 1 to March 31, 1976.

(3) In order to assure the effective implementation of the car pool locator, express bus lanes, increased bus fleet and service, elimination of free on-street commuter parking, elimination of free employee parking, and the parking surcharge approved in §52.2423, the Commonwealth shall monitor vehicle miles traveled and average vehicle speeds for each area in which such sections are in effect and during such time periods as may be appropriate to evaluate the effectiveness of such a program. All data obtained from such monitoring shall be included in the quarterly report submitted to the Administrator by the Commonwealth of Virginia in accordance with §58.35 of this chapter. The first quarterly report shall cover the period from July 1 to September 30, 1974. The vehicle miles traveled and vehicle speed data shall be collected on a monthly basis and submitted in a format similar to Table 1.

TABLE 1

Time period.
Affected area.

Roadway type	VMT or average vehicle speed	
	Vehicle type (1)	Vehicle type (2)[1]
Freeway		
Arterial		
Collector		
Local		

[1] Continue with other vehicle types as appropriate.

(4) No later than March 1, 1974, the Commonwealth shall submit to the Administrator a compliance schedule to implement this section. The program description shall include the following:

(i) The agency or agencies responsible for conducting, overseeing, and maintaining the monitoring program.

(ii) The administrative procedures to be used.

(iii) A description of the methods to be used to collect the emission data, VMT data, and vehicle speed data; a description of the geographical area to which the data apply; identification of the location at which the data will be collected; and the time periods during which the data will be collected.

[37 FR 10898, May 31, 1972, as amended at 37 FR 15091, July 27, 1972; 38 FR 16568, June 22, 1973; 38 FR 33724, Dec. 6, 1973; 44 FR 27571, May 10, 1979; 51 FR 40677, Nov. 7, 1986]

§§ 52.2428—52.2432 [Reserved]

§ 52.2433 Intergovernmental cooperation.

(a) The requirements of Subpart M of this chapter are not met because the plan does not adequately identify the State and local agencies, and their responsibilities, involved in carrying out the proposed transportation control measures.

[38 FR 16569, June 22, 1973, as amended at 51 FR 40677, Nov. 7, 1986]

§§ 52.2434—52.2435 [Reserved]

§ 52.2436 Rules and regulations.

(a) [Reserved]

(b) The requirements of § 51.281 are not met with respect to Section 4.55 (b) of the Virginia regulations, because the regulation is not adequately enforceable. Therefore, Section 4.55(b) is disapproved.

[38 FR 33725, Dec. 6, 1973, as amended at 45 FR 55197, Aug. 19, 1980; 51 FR 40677, Nov. 7, 1986; 61 FR 16063, Apr. 11, 1996]

§§ 52.2437—52.2449 [Reserved]

§ 52.2450 Conditional approval.

Virginia's September 28, 1994 SIP submittal of a Consent Order and Agreement (Order) between the Department of Environmental Quality of the Commonwealth of Virginia and Philip Morris, Inc. establishing reasonably available control technology (RACT) for the Manufacturing Center located in Richmond, Virginia is conditionally approved based on certain contingencies. The condition for approval is to revise and resubmit the Order as a SIP revision within one year of September 29, 1995 according to one of the following: Eliminate the exemption to use non-ethanol-based flavorings in lieu of add-on controls; restrict the applicability of the exemption to the use of non-VOC based flavorings; or impose monitoring and reporting requirements sufficient to determine net increases or decreases in emissions on a mass basis relative to the emissions that would have occurred using add-on controls on an average not to exceed thirty days.

[60 FR 45056, Aug. 30, 1995]

§ 52.2451 Significant deterioration of air quality.

(a) The requirements of sections 160 through 165 of the Clean Air Act are not met, since the plan does not include approvable procedures for preventing the significant deterioration of air quality.

(b) Regulations for preventing significant deterioration of air quality. The provisions of § 52.21(b) through (w) are hereby incorporated and made a part of the applicable state plan for the State of Virginia.

(c) Pursuant to 40 CFR 52.21(u) full delegation of authority for all portions of the Federal PSD program, as described in 40 CFR 52.21, was relinquished to the Commonwealth of Virginia as of June 3, 1981. All applications submitted as of that date and supporting information required pursuant to § 52.21 from sources located in the Commonwealth of Virginia shall be submitted to: Division of Compliance, State Air Pollution Control Board, Commonwealth of Virginia, Room 1116, Ninth Street Office Building, Richmond, VA 23214.

[43 FR 26410, June 19, 1978, as amended at 45 FR 52741, Aug. 7, 1980; 46 FR 33524, June 30, 1981; 47 FR 28373, June 30, 1982]

§ 52.2452 Visibility protection.

(a) The requirements of section 169A of the Clean Air Act are not met, because the plan does not include approvable procedures for protection of visibility in mandatory Class I Federal areas.

(b) Regulation for visibility monitoring. The provisions of § 52.26 are hereby incorporated and made a part of the applicable plan for the State of Virginia.

(c) *Long-term strategy*. The provisions of § 52.29 are hereby incorporated and

made part of the applicable plan for the State of Virginia.

[50 FR 28553, July 12, 1985, as amended at 52 FR 45137, Nov. 24, 1987]

§52.2453 Requirements for state implementation plan revisions relating to new motor vehicles.

Virginia must comply with the requirements of §51.120 with respect to the portion of Virginia that in 1990 was located in the Consolidated Metropolitan Statistical Area containing the District of Columbia.

[60 FR 4738, Jan. 24, 1995]

§52.2460 Small business stationary source technical and environmental compliance assistance program.

On November 10, 1992, the Executive Director of the Virginia Department of Air Pollution Control submitted a plan for the establishment and implementation of a Small Business Stationary Source Technical and Environmental Compliance Assistance Program as a State Implementation Plan revision, as required by title V of the Clean Air Act. EPA approved the Small Business Stationary Source Technical and Environmental Compliance Assistance Program on February 4, 1994, and made it a part of the Virginia SIP. As with all components of the SIP, Virginia must implement the program as submitted and approved by EPA.

[59 FR 5329, Feb. 4, 1994]

Subpart WW—Washington

§52.2470 Identification of plan.

(a) Title of plan: ''A Plan for the Implementation, Maintenance and Enforcement of National Ambient Air Quality Standards in the State of Washington.''

(b) The plan was officially submitted on January 28, 1972.

(c) The plan revisions listed below were submitted on the dates specified.

(1) Contingency request for a two year extension for carbon monoxide and nitrogen dioxide in the Puget Sound Intrastate Region and for carbon monoxide in the Eastern Washington-Northern Idaho Interstate Region submitted on January 28, 1972, by the Governor.

(2) Request for a two year extension, delegation of legal authority and amendments to the implementation plan submitted on May 5, 1972, by the Governor.

(3) Notices of public hearings and certifications that hearings were held regarding implementation plan matters submitted on July 18, 1972, by the Department of Ecology.

(4) Clarifying submission (Non-regulatory) to the implementation plan submitted on September 11, 1972, by the Governor.

(5) Compliance schedules submitted on December 12, 1972, by the Washington Department of Ecology.

(6) Compliance schedules, revisions to WAC 18–04, 18–12 and 18–40, and a new regulation WAC 18–06 submitted on February 15, 1973, by the Governor.

(7) Transportation control plan submitted on April 13, 1973, by the Governor.

(8) Revisions to the transportation control plan submitted on May 31, 1973, by the Governor.

(9) Compliance schedules submitted on July 25, 1973, by the Department of Ecology.

(10) Indirect source plan submitted on October 11, 1973, by the Department of Ecology.

(11) Indirect source regulation (WAC 18–24) submitted on June 14, 1974, by the Governor.

(12) Air quality maintenance area designation submitted on May 31, 1974, by the Washington Department of Ecology.

(13) Revisions to the State and local agency open burning regulations submitted on September 10, 1973, by the Department of Ecology.

(14) Information regarding the approval of the revised open burning regulations submitted on May 23, 1975, by the Department of Ecology.

(15) Revision to section 9.05(c) of Regulation I of the Olympic Air Pollution Control Authority submitted November 6, 1975 by the Governor.

(16) On April 4, 1979 the State of Washington Department of Ecology submitted a request to extend for eighteen months the date for plan submission for all secondary total suspended particulate nonattainment areas.

(17) On June 26, 1975 the Governor submitted amendments to WAC 18–24 ''State jurisdiction over Motor Vehicles'' which repealed the program for preconstruction review and approval of indirect sources, leaving only Sections 020—Definitions and 030—Assumption of Jurisdiction. On April 27, 1979 the Governor submitted revisions required by Part D of the Clean Air Act as amended in 1977, specifically: plans for the Seattle primary total suspended particulate (TSP) nonattainment area, the Tacoma primary TSP nonattainment area, the Seattle-Tacoma carbon monoxide (CO) and ozone nonattainment areas (along with a request for an extension of the attainment dates to beyond December 31, 1982), the Spokane primary TSP nonattainment area, the Clarkston primary TSP nonattainment area, the Vancouver primary TSP nonattainment area, and the Yakima CO nonattainment area; revisions to State and local regulations for nonattainment areas (WAC 173–400–010, 173–400–020, 173–400–030, 173–400–040 (except (13)), 173–400–050, 173–400–060, 173–400–070, 173–400–090, 173–400–100, 173–400–110, and 173–400–120; WAC 173–420; WAC 173–425, WAC 173–490 (except 173–150); Puget Sound Air Pollution Control Agency Regulation I, Articles 1, 3, 6, 9 (Sections 9.02, 9.02A, 9.03, 9.04, 9.05, 9.06, 9.07(d), 9.07(e), and 9.09); Northwest Air Pollution Control Authority Regulation Section 455.11; and Spokane County Air Pollution Control Authority Regulation Article IV, Section 4.01); and the rescission of State and local agency regulations which duplicated applicable Federal or State regulations for nonattainment areas (WAC 18–04–010, 18–04–020, 18–04–030, 18–04–040, 18–04–050, 18–04–060, 18–04–070, 18–04–090, 18–04–100, 18–04–110, and 18–04–120; WAC 18–06; WAC 18–12; WAC 18–20; WAC 18–24; WAC 18–28; WAC 18–32; WAC 18–40; WAC 18–44; WAC 18–46; WAC 18–48; WAC 18–56; WAC 18–60; Puget Sound Air Pollution Control Agency Regulation I, Articles 5, 9 (Sections 9.07(a), 9.07(b), 9.11, 9.12, 9.13, 9.15, and 9.16), and 11; Spokane County Air Pollution Control Authority Regulations I and II (except Article IV, Section 4.01); Northwest Air Pollution Authority Regulations 1 and 2 and Section 501 Southwest Air Pollution Control Agency Regulations 1 and 2; Olympic Air Pollution Control Agency Regulation I; Yakima County Clean Air Authority Regulation 1; Grant County Clean Air Authority Regulation; Benton-Franklin-Walla Walla Air Pollution Control Agency Regulation; and Douglas County Air Pollution Control Commission Article V, Section 5.01). On May 18, 1979 the State of Washington Department of Ecology submitted corrections to the Puget Sound area emission inventory in the April 27, 1979 submittal. On June 20, 1979 the Governor submitted the plan for the Vancouver ozone nonattainment area including a request for an extension of the attainment date to beyond December 31, 1982. On December 21, 1979 the State of Washington Department of Ecology submitted statutory authority for an automobile inspection and maintenance program and a detailed schedule for its implementation. On May 1, 1980 the State of Washington Department of Ecology submitted revised statutory language pertaining to State legal authority.

(18) On April 1, 1980 the State of Washington Department of Ecology submitted revisions to the regulations for Kraft Pulping Mills (WAC 173–405–011; 173–405–021; 173–405–031(1), (4), (5) and (6); 173–405–036(1), (2) and (4); 173–405–061; 173–405–071(2), (3), (4)(d), (4)(e) and (5); 173–405–077; 173–405–078; 173–405–086; and 173–405–101), Sulfite Pulping Mills (WAC 173–410–011; 173–410–021; 173–410–031; 173–410–036(1), (2) and (4); 173–410–041; 173–410–061 (1) through (8); 173–410–067; 173–410–071; 173–410–086; and 173–410–091), and Primary Aluminum Plants (WAC 18–52–010; 18–52–016; 18–52–021; 18–52–031 (2) and (4); 18–52–036(1); 18–52–056; 18–52–061; 18–52–071(1)(c), (1)(f), and (2); 18–52–077; and 18–52–086) and rescission of old regulations (WAC 18–36–010, 18–36–020, 18–36–030, 18–36–040, 18–36–050, 18–36–060, 18–36–070, 18–36–080, 18–36–090 and 18–36–100; WAC 18–38–010, 18–38–020, 18–38–030, 18–38–040, 18–38–050, 18–38–060, 18–38–070, 18–38–080 and 18–38–090; and WAC 18–52–015, 18–52–020, 18–52–030 (except (3)), 18–52–040, 18–52–060, 18–52–070 and 18–52–080) to satisfy the requirements of Part D of the Clean Air Act.

(19) On April 27, 1979 the Governor submitted the plan for the Spokane carbon monoxide (CO) nonattainment area. On September 10, 1980 the State

of Washington Department of Ecology submitted a revised transportation control plan for the Spokane CO nonattainment area.

(20) On March 5, 1980 the State of Washington Department of Ecology submitted a plan revision to meet the requirements of 40 CFR part 58, subpart C, § 58.20 Air Quality Monitoring.

(21) On April 27, 1979 the Governor submitted a provision for maintenance of pay (WAC 173–400–160).

(22) On June 24, 1980 the State of Washington Department of Ecology submitted a new regulation WAC 173–402 ''Civil Sanctions Under Washington Clean Air Act''. On July 30, 1980 the State of Washington Department of Ecology submitted revisions to WAC 173–400 (specifically 173–020; 173–030; 173–040 (except (13)); 173–050; 173–060; 173–070; 173–090; 173–100; 173–110; and 173–120), WAC 173–405 (specifically 173–012; 173–021; 173–040 (1), (2), (3), (4), (5), (6) and (17); 173–072(1), (4) and (5); 173–077, 173–086; and 173–101; and rescission of 173–011; 173–031 (1), (4), (5) and (6); 173–036 (1), (2) and (4); 173–061; 173–071 (2), (3), (4)(d), (4)(e) and (5); and 173–078), WAC 173–410 (specifically 173–012; 173–021; 173–040 (1), (2), (3), (5) and (16); 173–062 (1), (2) and (3); 173–067; 173–086; 173–090; and 173–091; and rescission of 173–011; 173–031; 173–036 (1), (2) and (4); 173–041; 173–061 (1) through (8); and 173–071), WAC 173–415 (specifically 173–010; 173–020; 173–030(2)(b), (4), (5), (7) and (11); 173–050; 173–060(1)(c) and (2); 173–070; and 173–090), WAC 173–490 (specifically 173–010; 173–020; 173–025; 173–030; 173–040; 173–070; 173–071; and 173–080), rescission of old WAC 18–52 (specifically 18–010; 18–016; 18–021; 18–030(3); 18–031 (2) and (4); 18–036(1); 18–056; 18–061; 18–071(1)(c), (1)(f) and (2); 18–077; and 18–086), and revisions to the Seattle-Tacoma carbon monoxide, Seattle-Tacoma ozone, Vancouver ozone, Seattle primary total suspended particulate (TSP), Tacoma primary TSP, Vancouver primary TSP, Spokane primary TSP and Clarkston primary TSP nonattainment area plans, in order to satisfy the conditions of approval published on June 5, 1980 and July 31, 1980. On November 7, 1980 the State of Washington Department of Ecology submitted clarifying information, including the designated ''no burn'' areas for the Seattle, Tacoma and Spokane TSP nonattainment areas to satisfy the conditions of approval published on June 5, 1980. On January 13, 1981 the State of Washington Department of Ecology submitted further revisions to WAC 173–400–110 and WAC 173–490–020 and 173–490–040 in order to satisfy the conditions of approval published on June 5, 1980.

(23) On August 17, 1979 and July 30, 1980 the Governor submitted revisions to the State of Washington Implementation Plan to provide authority to the Energy Facility Site Evaluation Council to implement the plan required by section 110 of the Clean Air Act for energy facilities, specifically, statutory authority (80.50 RCW), applicable regulations (WAC 463–39–010; 463–39–020; 463–39–030 (except (4), (7), (10), (24), (25), (30), (35) and (36)); 463–39–040 (except introductory paragraph); 463–39–050; 463–39–060; 463–39–080; 463–39–100; 463–39–110 (except (1), first two sentences of (3)(b), (3)(c), (3)(d) and (3)(e)); 463–39–120; 463–39–130; 463–39–135; 463–39–150; and 463–39–170), and a Memorandum of Agreement between the Energy Facility Site Evaluation Council and the State of Washington Department of Ecology describing program implementation. On May 28, 1981, the Energy Facility Site Evaluation Council submitted an Attorney General's opinion certifying that 80.50 RCW provided sufficient enabling authority to meet the requirements of the Clean Air Act.

(24) On November 17, 1981 the State of Washington Department of Ecology submitted a revision to the plan for the Spokane carbon monoxide nonattainment area, including a schedule for the implementation of an expanded transit service to satisfy the condition of approval published on December 24, 1980.

(25) On July 30, 1980 the State of Washington Department of Ecology submitted revisions to the regulations for sources of volatile organic compounds (VOC), specifically WAC 173–490–200, 173–490–201, 173–490–202, 173–490–203, 173–490–204, 173–490–205 (except (d)), 173–490–206 and 173–490–207. On January 13, 1981 the State of Washington Department of Ecology submitted a further revision to WAC 173–490–203. On June 25, 1981 the State of Washington Department of Ecology submitted VOC source test methods. On November 13,

1981 the State of Washington Department of Ecology submitted clarifying information on the regulations for sources of VOC.

(26) On July 16, 1982 the State of Washington Department of Ecology submitted an attainment plan for the Vancouver ozone nonattainment area and amendments to the regulations for sources of volatile organic compounds (WAC–490–020, 490–025, 490–9040, 490–080, 490–203, 490–204, 490–205 and 490–208, and rescission of 490–206).

(27) On July 16, 1982 the State of Washington Department of Ecology submitted attainment plans for the Seattle-Tacoma ozone nonattainment area and the Seattle carbon monoxide (CO) nonattainment area, including regulations for motor vehicle emission inspection (WAC 173–422) and the Puget Sound Air Pollution Control Agency regulation for sources of volatile organic compounds (Regulation II). On December 1, 1982 the State of Washington Department of Ecology submitted procedures by which conformity of Federal projects with the Seattle-Tacoma ozone and Seattle CO plans will be determined.

(28) Amendments to page III–D–2 (TABLE 8—DEPARTMENT OF ECOLOGY SOURCE TEST METHODS WHICH ARE USED FOR COMPLIANCE) of the Washington State Implementation Plan, submitted by the State Department of Ecology on July 23, 1984.

(29) On September 13, 1983 the State of Washington Department of Ecology submitted a revision to add a lead strategy to the Washington Implementation Plan.

(30) On June 15, 1984 the Washington Department of Ecology submitted a demonstration of attainment of the lead standard for the area around a primary copper smelter in Tacoma, Washington.

(31) On June 16, 1983, the State of Washington Department of Ecology submitted to EPA, the Tacoma carbon monoxide attainment plan as an official SIP revision. This plan builds upon the July 16, 1982, Ozone SIP for the Puget Sound area.

(32) On September 27, 1984 the State of Washington Department of Ecology submitted a revision to the approved lead SIP which revised the demonstration of attainment for the secondary lead smelter in Seattle.

(33) On January 16, 1984 the Washington Department of Ecology submitted revisions to the approved SIP which added the PSAPCA emission offset and banking program to the approved SIP regulations. The revisions consisted of new section 1.07(s), 1.07(rr), 1.07(xx), 6.07(b)(7) and 6.08 of PSAPCA Regulation I.

(34) A revision to the Washington State Implementation Plan was submitted by the Director of the Washington Department of Ecology on September 27, 1984. The revision adds a mandatory Vehicle Inspection and Maintenance program to the Spokane Carbon Monoxide Plan.

(i) Incorporation by reference.

(a) Amendments to Chapter 173–422 Washington Administrative Code, Motor Vehicle Emission Inspection, which was published on April 18, 1984.

(ii) Additional material. (*a*) Technical Support Document as prepared by the Washington State Department of Ecology in support of approval dated January 11, 1985.

(35) On February 21, 1985 the State of Washington Department of Ecology submitted revisions to Regulation II, specifically, §§1.02, 2.13, 3.11 and 4.02, and ''Monitoring and Reporting Procedures for VOC Sources'' as adopted in Puget Sound Air Pollution Control Agency Resolution 568.

(i) Incorporation by reference.

(A) Letter dated February 21, 1985 from the Washington Department of Ecology to EPA Region 10.

(B) Resolution 568—Revisions to Regulation II and ''Monitoring and Reporting Procedures for VOC Sources'' as adopted by the Puget Sound Air Pollution Control Agency on December 13, 1984.

(36) Washington State's Visibility Protection Program, except Section V. B. New Source Review, Appendix A—Proposed Best Available Retrofit Technology Regulation and Appendix B—Proposed New Source Review Regulations, submitted by the Director of the Washington Department of Ecology on January 5, 1984; certain provisions of 173–403 WAC Implementation of Regulations for Air Contaminant Sources,

specifically, WAC 173–403–030(2), (9), (11), (24), (25), (31), (42), (46), (51), and (52), submitted by the Director of the Washington Department of Ecology on April 1, 1985; WAC 173–403–090, submitted by the Director of the Washington Department of Ecology on September 6, 1983; and the State of Washington Department of Natura1 Resources Smoke Management Program, submitted by the Director of the Washington Department of Ecology on April 27, 1979, and January 5, 1984.

(i) Incorporation by reference.

(A) Letter dated April 1, 1985, from the Director of the State of Washington Department of Ecology to EPA. Provisions of WAC 173–403–030 (Definitions) introductory text, (2), (9), (11), (24), (25), (31), (42), (46), (51), and (52), adopted by the State of Washington Department of Ecology on February 14, 1985.

(B) Letter dated September 6, 1983, from the Director of the State of Washington Department of Ecology to EPA. WAC 173–403–090 (''Retrofit Requirements for Visibility Protection''), adopted by the State of Washington Department of Ecology on August 25, 1983.

(C) Letter dated January 5, 1984, from the Director of the State of Washington Department of Ecology to EPA. ''Washington State's Visibility Protection Program (10/3/83),'' except Section V. B. ''New Source Review,'' Appendix A—''Proposed Best Available Retrofit Technology Regulation'' and Appendix B—''Proposed New Source Review Regulations'' adopted by the State of Washington Department of Ecology on January 5, 1984;

(D) Appendix K (''The State of Washington Department of Natural Resources Air Quality-Prescribed Burning Smoke Management Program'') revised June 1975.

(37) On April 28, 1983, the State of Washington Department of Ecology submitted amendments to the State of Washington sulfur dioxide emission limitation. These amendments clarify the averaging time for the sulfur dioxide emission limitation in WAC 173–400–040(6).

(i) Incorporation by reference.

(A) Letter dated April 28, 1983, from the Director of the Department of Ecology to EPA Region 10 amending the State of Washington State Implementation Plan.

(B) Washington Administrative Code [WAC] Chapter 173–400 [General Regulations for Air Pollution Sources], –040 [General Standard for Maximum Emissions], (6) [Sulfur Dioxide] introductory sentence adopted into state law by the State of Washington Department of Ecology on March 30, 1983 and became effective on May 11, 1983.

(38) On January 23, 1989 and May 14, 1991 the Director of the Department of Ecology submitted amended regulations as revisions to the Washington state implementation plan. EPA has approved the following as revisions to the implementation plan: WAC 173–400 (except for –040(1) (c) and (d); –040(2); –040(4); the second paragraph of –040(6); the exception provision in –050(3); –070(7); –075; –115; –120; –131; –136; –141; and –180) as in effect on March 22, 1991; the repeal of WAC 173–403 as in effect on March 22, 1991; WAC 173–405 (except for –033; –035; –040(1)(b); –040(1)(c); –040(3)(b); –040(3)(c); –040(4); –040(7); –040(8); –040(9); and –072(2)) as in effect on March 22, 1991; WAC 173–410 (except for –035; the exception provision in –040(3); and –040(5)) as in effect on March 22, 1991; WAC 173–415 (except for –020(1); –020(2); –030(1); –030(3)(b); –040; and –060(1) (a), (b), and (d)) as in effect on March 22, 1991; WAC 173–425 as in effect on October 18, 1990; WAC 173–430 as in effect on October 18, 1990; WAC 173–433 as in effect on October 18, 1990; WAC 173–434 (except for –110, –120, and –130(2)) as in effect on October 18, 1990; WAC 173–435 (except for –070(1)); as in effect on January 3, 1989; WAC 173–440 as in effect on October 18, 1990; WAC 173–470 (except for –110 and –150) as in effect on January 3, 1989.

(i) Incorporation by reference.

(A) January 23, 1989, letter from the Director of the Department of Ecology to EPA Region 10 submitting amendments to the Washington state implementation plan.

(B) May 14, 1991, letter from the Director of the Department of Ecology to EPA Region 10 submitting amendments to the Washington state implementation plan.

(C) Washington Administrative Code, Chapter 173–400 (General Regulations

for Air Pollution Sources) (except for –040(1) (c) and (d), –040(2), –040(4), the second paragraph of –040(6), the exception provision in –050(3), –070(7), –075, –115, –120, –131, –136, –141, and –180) as in effect 3/22/91; Washington Administrative Code, Chapter 173–405 (Kraft Pulp Mills) (except for –033; –035; –040(1)(b), (1)(c), (3)(b), (3)(c), and (4); –040 (7), (8), and (9); and –072(2)) as in effect 3/22/91; Washington Administrative Code Chapter 173–410 (Sulfite Pulping Mills) (except for 035; the exception provision in –040(3); and –040(5)) as in effect 3/22/91; Washington Administrative Code Chapter 173–415 (Primary Aluminum Plants) (except for –020 (1) and (2); –030(1); –030(3)(b); –040; and –060(1) (a), (b), and (d)) as in effect 3/22/91; Washington Administrative Code Chapter 173–425 (Open Burning) as in effect 10/18/90; Washington Administrative Code Chapter 173–430 (Burning of Field and Forage and Turf Grasses Grown for Seed) as in effect 10/18/90; Washington Administrative Code Chapter 173–433 (Solid Fuel Burning Device Standards) as in effect 10/18/90; Washington Administrative Code Chapter 173–434 (except for –110, –120, and –130(2)) as in effect 10/18/90; Washington Administrative Code Chapter 173–435 (Emergency Episode Plan) (except for–070(1)) as in effect 1/3/89; Washington Administrative Code Chapter 173–440 (Sensitive Areas) as in effect 10/18/90; and Washington Administrative Code Chapter 173–470 (Ambient Air Quality Standards for Particulate Matter) (except for –110 and –150) as in effect 1/3/89.

(39) On May 14, 1991, the Director of the Department of Ecology submitted revisions to the State of Washington Implementation plans for volatile organic compound emissions (WAC 173–490 ''Emission Standards and Controls for Sources Emitting Volatile Compounds'') attainment from stationary sources in ozone nonattainment areas.

(i) Incorporation by reference.

(A) May 14, 1991, letter from Washington Department of Ecology to EPA Region 10 submitting the VOC nonattainment area state implementation plan for Washington.

(B) WAC 173–490 ''Emission Standards and Controls for Sources Emitting Volatile Compounds'' as adopted on February 19, 1991, and became effective on March 22, 1991.

(40) On November 15, 1991, EPA received the Washington Department of Ecology submission for a PM_{10} nonattainment area state implementation plan for Kent, Washington.

(i) Incorporation by reference.

(A) November 5, 1990, letter from Washington Department of Ecology to EPA Region 10 submitting the PM_{10} nonattainment area state implementation plan for Kent, Washington.

(B) The PM_{10} nonattainment area state implementation plan for Kent, Washington as adopted by the Washington Department of Ecology on November 3, 1990, and effective on November 3, 1991.

(C) December 27, 1990, letter from Washington Department of Ecology to EPA Region 10 submitting an addendum to the PM_{10} nonattainment area state implementation plan for Kent, Washington.

(D) PM_{10} SIP addendum, dated June 5, 1990, to the PM_{10} Kent, Washington state implementation plan.

(E) November 15, 1991, letter from Washington Department of Ecology to EPA Region 10 submitting a supplement to the PM_{10} nonattainment area state implementation plan for Kent, Washington.

(F) PM_{10} SIP supplement, dated November 1991, to the PM_{10} Kent, Washington state implementation plan.

(41) On February 17, 1989, and November 15, 1991, the State of Washington Department of Ecology submitted PM_{10} nonattainment area state implementation plan revisions for Thurston County, Washington.

(i) Incorporation by reference.

(A) February 17, 1989, letter from Washington Department of Ecology to EPA Region 10 submitting the PM_{10} nonattainment area state implementation plan for Thurston County, Washington.

(B) The PM_{10} nonattainment area state implementation plan for Thurston County, Washington, as adopted by the Washington Department of Ecology on February 8, 1989.

(C) November 15, 1991, letter from Washington Department of Ecology to EPA Region 10 submitting revisions to

the PM_{10} nonattainment area state implementation plan for Thurston County, Washington.

(D) Revision to the PM_{10} nonattainment area state implementation plan for Thurston County, Washington, as adopted by the Washington Department of Ecology on November 14, 1991.

(42) On January 22, 1993, the State of Washington Department of Ecology submitted revisions to the State Implementation Plan for the State of Washington addressing the attainment and maintenance of the National Ambient Air Quality Standards for carbon monoxide in the King, Pierce, Snohomish, Clark and Spokane Counties.

(i) Incorporation by reference.

(A) January 22, 1993, letters from the State of Washington Department of Ecology to EPA Region 10 submitting amendments to the Washington State Implementation Plan for Carbon Monoxide in the King, Pierce, Snohomish, Clark, and Spokane Counties.

(B) Supplements to the State Implementation Plan for Washington State—a plan for attaining and maintaining National Ambient Air Quality Standards (NAAQS) for the Spokane Carbon Monoxide Nonattainment Area, Vancouver Air Quality Maintenance Area, and Puget Sound Carbon Monoxide Nonattainment Area, adopted on January 22, 1993.

(C) State Regulations Appendix B-Part 2, ''Motor Fuel Specifications for Oxygenated Gasoline, Chapter 173–492 WAC,'' of the Washington State SIP appendices, adopted October 6, 1992.

(D) State Policies and Guidelines Appendix D, ''Oxygenated Gasoline Program, Implementation Guidelines, Washington State Department of Ecology, September 1992.''

(43) On September 11, 1992 and October 8, 1993 the Director of the WDOE submitted revisions to PSAPCA's rules for the control of air pollution in Pierce, King, Snohomish, and Kitsap Counties, Washington as revisions to the Washington SIP. These revisions superseded and replaced previously submitted rules by PSAPCA.

(i) Incorporation by reference.

(A) September 11, 1992 letter from the Director of WDOE to EPA Region 10 submitting revisions to PSAPCA's rules for the control of air pollution in King, Pierce, Snohomish, and Kitsap Counties, Washington, for inclusion into the Washington SIP.

(B) Regulations I, II, and III as adopted by the Board of Directors, PSAPCA, and submitted through the WDOE to EPA Region 10, as a revision to the SIP, with a WDOE adopted date of September 16, 1992.

(C) October 8, 1993 letter from the Director of WDOE to EPA Region 10 submitting revisions to PSAPCA's rules for the control of air pollution in King, Pierce, Snohomish, and Kitsap Counties, Washington, for inclusion into the Washington SIP.

(D) Regulations I, II, and III as adopted by the Board of Directors, PSAPCA, and submitted through WDOE to EPA Region 10, as a revision to the SIP, with a WDOE adopted date of October 18, 1993.

(44) On September 22, 1993, the state of Washington, through the Washington State Department of Ecology, submitted a request to redesignate Tacoma to attainment for sulfur dioxide (SO_2).

(i) Incorporation by reference.

(A) September 22, 1993 letter from Washington State Department of Ecology to EPA Region 10 submitting a redesignation request for the Tacoma SO_2 Air Quality Maintenance Area (AQMA).

(45) On November 16, 1992 the Director of the Washington State Department of Ecology submitted ''State Implementation Plan for the Washington State Business Assistance Program,'' adopted November 13, 1992, as a revision to the Washington SIP.

(i) Incorporation by reference.

(A) November 13, 1992 letter from the Director of the Washington State Department of Ecology submitting ''State Implementation Plan for the Washington State Business Assistance Program'' to EPA.

(B) *State Implementation Plan for the Washington State Business Assistance Program*, including Appendix B, Revised Code of Washington (RCW) 70.94.035; Appendix D, Washington Administrative Code 173–400–180; Appendix E, RCW 70.94.181; and Appendix F, Business Assistance Program Guidelines (and exluding Appendices A, C, and G),

dated November 1992, and adopted November 13, 1992.

(46) On January 28, 1993 the State of Washington submitted a SIP revision for the purpose of implementing an emission statement program for stationary sources within the Vancouver Air Quality Maintenance Area and the Central Puget Sound Ozone Nonattainment Area. The implementation plan was submitted by the State to satisfy the Federal requirements for an emission statement program as part of the SIP for Washington State.

(i) Incorporation by reference.

(A) Letters dated January 22, 1993 from the Director of the Washington Department of Ecology to EPA Region 10 amending the Washington SIP for both the Vancouver and Central Puget Sound areas.

(B) ''Supplement to the SIP for Washington State, A Plan for Attaining and Maintaining National Ambient Air Quality Standards for Ozone in Central Puget Sound,'' sections 6.0, 6.1, and 6.2, adopted January 22, 1993.

(C) ''Supplement to the SIP for Washington State, A Plan for Attaining and Maintaining National Ambient Air Quality Standards for Ozone in the Vancouver Air Quality Maintenance Area,'' sections 7.0, 7.1, 7.2, and 7.3, adopted January 22, 1993.

(47) On November 5, 1990, December 27, 1990, November 15, 1991 and May 11, 1994 the Director of WDOE submitted to EPA SIP revisions for the purpose of bringing about attainment of the National ambient air quality standards (NAAQS) for particulate matter with an aerodynamic diameter less than or equal to a nominal 10 micrometers (PM–10). The implementation plan was submitted by the State to satisfy certain Federal Clean Air Act requirements for an approvable moderate nonattainment area PM–10 SIP for Seattle, Washington.

(i) Incorporation by reference.

(A) Letters dated November 5, 1990, December 27, 1990, November 13, 1991 and May 2, 1994, from WDOE to EPA submitting the revisions to the SIP for the State of Washington.

(B) Revisions to the Washington SIP for the purpose of bringing about attainment of the National ambient air quality standards (NAAQS) for particulate matter with an aerodynamic diameter less than or equal to a nominal 10 micrometers (PM–10):

(*1*) A Plan for Attaining and Maintaining the National Ambient Air Quality Standard for PM–10 in the Seattle Duwamish Valley, September 1989, adopted November 3, 1990;

(*2*) Resolution No. 639 (amendments to the PM–10 attainment and maintenance strategy), adopted December 8, 1988;

(*3*) State Implementation Plan for Particulate Matter in the Seattle Duwamish Valley, Supplement, dated November 199l, adopted November 14, 1991; and

(*4*) State Implementation Plan for Particulate Matter in the Seattle Duwamish Valley, Supplement, dated January 1, 1994, adopted May 4, 1994.

(48) On November 15, 1991, the Director of WDOE submitted to EPA a PM–10 nonattainment area SIP revision for the purpose of bringing about attainment of the National ambient air quality standards (NAAQS) for particulate matter with an aerodynamic diameter less than or equal to a nominal 10 micrometers (PM–10). The implementation plan was submitted by the State to satisfy certain Federal Clean Air Act requirements for an approvable moderate nonattainment area PM–10 SIP for Tacoma, Washington.

(i) Incorporation by reference.

(A) Letters dated November 13, 1991 and June 30, 1994 from WDOE to EPA submitting revisions to the State of Washington SIP.

(B) *State Implementation Plan for Particulate Matter in the Tacoma Tideflats, Pierce County*, including appendices A-F, dated November 1991, and adopted November 14, 1991.

(49) On November 10, 1993, the State of Washington Department of Ecology submitted a CO State Implementation Plan for Clark County, Washington.

(i) Incorporation by reference.

(A) November 10, 1993 letter from the State of Washington Department of Ecology to EPA Region 10 submitting the CO State Implementation Plan for Clark County, Washington.

(B) Supplement to a Plan for Attaining and Maintaining National Ambient Air Quality Standards for Carbon Monoxide in the Vancouver Air Quality

Maintenance Area, Replacement Pages, as adopted by the Washington State Department of Ecology on November 15, 1993.

(50) By a letter dated December 29, 1993, the Director of WDOE submitted to the Regional Administrator of EPA a revision to the Washington SIP updating the regulations from the Northwest Air Pollution Authority.

(i) Incorporation by reference.

(A) The December 29, 1993 letter from the Director of the Washington State Department of Ecology submitting the Northwest Air Pollution Authority Regulations as a revision to the Washington SIP.

(B) Regulations of the Northwest Air Pollution Authority—sections 100, 101, 102, 103, 104.1, 105, 106, 110, 111, 112, 113, 114, 120, 121, 122, 123, 124, 130, 131, 132, 133, 134, 135, 140, 145, 150, 180, 200, 300, 301, 302, 303, 310, 320, 321, 322, 323, 324, 325, 340, 341, 342, 360, 365, 366, 400, 401, 410, 420, 421, 424, 450, 451, 452 (except for 452.5.), 455, 458, 460, 462, 466, 510, 520, 550, 560, and 580, effective on September 8, 1993.

(51) On April 11, 1994 the Washington Department of Ecology (WDOE) submitted the Southwest Air Pollution Control Authority (SWAPCA) 400 General Regulations for Air Pollution Sources as a revision to the Washington State Implementation Plan (SIP).

(i) Incorporation by reference.

(A) April 11, 1994 letter from the Director of WDOE to EPA Region 10 submitting the Southwest Air Pollution Control Authority SWAPCA 400 Regulation, General Regulations for Air Pollution Sources.

(B) Regulations of the Southwest Air Pollution Control Authority—Sections 010; 020; 030 except the second sentences of (14) and (43); 040 except (1)(c) and (1)(d) (2) (4) and the exception provision of (6)(a); 050 except the exception provision of (3); 052; 060; 070 except (7); 081; 090; 100 except the first sentence of (3)(a)(iv) and (5); 101; 105; 107; 110; 112; 113; 114; 151; 161; 171; 190; 200; 205; 210; 220; 230; 240; 250; and 260, effective on November 8, 1993.

(52) On December 6, 1994, the Director of WDOE submitted to EPA a contingency measure SIP revision for the Puget Sound Carbon Monoxide Nonattainment Area to satisfy certain applicable requirements of the Act.

(i) Incorporation by reference.

(A) Letter dated November 30, 1994 from WDOE to EPA submitting the CO revision for the Puget Sound area and, ''A Plan for Attaining and Maintaining National Ambient Air Quality Standards for the Puget Sound Carbon Monoxide Nonattainment Area,'' replacement pages 10–1 through 10–3, dated November 16, 1994, adopted November 29, 1994, and Attachment B of Addendum E, ''Contingency Measure Plan Element for the Central Puget Sound Region Carbon Monoxide State Implementation Plan—Final Plan,'' pages 1–15, dated May 26, 1994, and adopted November 29, 1994.

(53) Various minor revisions consisting of amended regulations affecting a local air agency, the Puget Sound Air Pollution Control Agency, and a recodified Table of Contents for the SIP were submitted to EPA from WDOE for inclusion into the Washington SIP.

(i) Incorporation by reference.

(A) Letters dated April 28, May 25, and December 5, 1994 from the Director of the Washington State Department of Ecology to the EPA Regional Administrator submitting minor revisions to PSAPCA's regulations for inclusion into the SIP: Puget Sound Air Pollution Control Agency, Regulations I, II, and III, adopted on May 4, 1994; Puget Sound Air Pollution Control Agency, Regulations I, II, and III, adopted on May 25, 1994; and Puget Sound Air Pollution Control Agency, Regulations I, II, and III, adopted on December 8, 1994.

(B) Letter dated January 26, 1995 from the Director of the Washington State Department of Ecology to the EPA Regional Administrator submitting the Recodified SIP Table of Contents, dated January 1995, and adopted on February 1, 1995.

(54) On March 8, 1994, the Director of WDOE submitted to the Regional Administrator of EPA numerous revisions to the State of Washington Implementation Plan which included updated new source review regulations and provisions for voluntary limits on a source's potential to emit. The revisions were submitted in accordance with the requirements of section 110

and Part D of the Clean Air Act (hereinafter the Act).

(i) Incorporation by reference.

(A) March 8, 1994 and May 8, 1995 letters from WDOE to EPA submitting requests for revisions to the Washington SIP consisting of an amended state regulation; Chapter 173–400 Washington Administrative Code General Regulations for Air Pollution Sources, adopted on August 20, 1993, in its entirety with the exception of the following sections: –040(1)(c) and (d); –040(2); –040(4); the second paragraph of –040(6); the exception provision in –050(3); –070(7); –075; –112(8); –113(5); –114; –115; –120; –131; –136; –141; and –180.

(55) On January 22, 1993 the Director of the Washington State Department of Ecology (WDOE) submitted the amendment to the Washington SIP for Carbon Monoxide (CO) in the King, Pierce, and Snohomish Counties' Urbanized Areas.

(i) Incorporation by reference.

(A) The January 22, 1993 letter from the Director of the WDOE submitting the Amendment to the Washington SIP for Carbon Monoxide in the King, Pierce, and Snohomish Counties' Urbanized Areas to EPA, ''Supplement to the SIP for Washington State, Puget Sound Carbon Monoxide Nonattainment Area, January 1993,'' Section 6.0 Vehicle Miles Traveled Forecasting and Tracking, adopted on January 22, 1993.

(ii) Additional material.

(A) VMT supplements to include the VMT Tracking Report data required for the Puget Sound CO Nonattainment Areas, dated October 13, 1994 and September 19, 1994.

(56) On February 14, 1995, the Director for the Washington State Department of Ecology (WDOE) submitted amended regulations for the Northwest Air Pollution Authority (NWAPA) as a revision to the Washington State Implementation Plan (SIP).

(i) Incorporation by reference.

(A) The February 7, 1995 letter from the Director of WDOE submitting the amended NWAPA regulations to the Environmental Protection Agency (EPA); the Northwest Air Pollution Authority Regulations (approving sections 104.1, 132, 133, 200, 300, 301, 302, 322, 324 (except for 324.121), 340, 451, 462, 580) adopted on February 10, 1995.

(57) On May 2, 1995, WDOE submitted to EPA revisions to the Washington SIP addressing the conditional approval of the State Implementation Plan (SIP) for particulate matter (PM10) in the Tacoma TIdeflats PM10 Nonattainment Area.

(i) Incorporation by reference.

(A) May 2, 1995 letter from WDOE to EPA Region submitting the SIP revision for Particulate Matter in the Tacoma Tideflats, A Plan for Attaining and Maintaining the National Ambient Air Quality Standard for PM10, Supplement May 1995, adopted on May 4, 1995.

(58) On February 21, 1995 and May 11, 1994, WDOE submitted to EPA revisions to the Washington SIP addressing the contingency measures for the Seattle and Kent PM–10 nonattainment plans.

(i) Incorporation by reference.

(A) February 21, 1995 letter from the Washington Department of Ecology to EPA Region 10 submitting PSAPCA Section 13.07—Contingency Plan, adopted December 8, 1994, as a revision to the Seattle PM–10 attainment plan and the Washington SIP.

(B) May 11, 1994 letter from WDOE to EPA Region 10 submitting clarifying documentation to the contingency measure for Kent Valley PM–10 attainment plan.

(59) Various minor revisions consisting of amended regulations affecting a local air agency, PSAPCA, were submitted to EPA from the WDOE for inclusion into the Washington SIP.

(i) Incorporation by reference.

(A) Letters dated May 17, and September 7, 1995 from the Director of the WDOE to the EPA Regional Administrator submitting minor revisions to PSAPCA's regulations for inclusion into the SIP: PSAPCA, Regulation I adopted on May 22, 1995; PSAPCA, Regulation III adopted on September 11, 1995.

(60) On November 29, 1995 the Director of WDOE submitted to the Regional Administrator of EPA the Energy Facility Site Evaluation Council Regulations (EFSEC) as a revision to the Washington State Implementation Plan (SIP).

(i) Incorporation by reference.

(A) The November 29, 1995 letter from WDOE to EPA submitting requests for revisions to the Washington SIP to include the Energy Facility Site Evaluation Council Regulations; EFSEC Regulation Chapter 463–39 Washington Administrative Code General and Operating Permit Regulations for Air Pollution Sources, (excluding the following sections: 005 (2) through (4); –070; –090; –105; –115; –140; those portions of –005(1), –020, –030, –095, –100, and –120 containing any reference to regulations or provisions of regulations in Chapters 173–400, 173–401, 173–406, 173–460, or 463–58a) adopted on November 16, 1995.

[37 FR 10900, May 31, 1972]

EDITORIAL NOTE: For FEDERAL REGISTER citations affecting § 52.2470, see the List of CFR Sections Affected in the Finding Aids section of this volume.

EFFECTIVE DATE NOTE: At 61 FR 25793, May 23, 1996, § 52.2470 was amended by adding paragraph (c)(60), effective July 22, 1996.

§ 52.2471 Classification of regions.

The Washington plan was evaluated on the basis of the following classifications:

Air quality control region	Pollutant				
	Particulate matter	Sulfur oxides	Nitrogen dioxide	Carbon monoxide	Ozone
Eastern Washington-Northern Idaho Interstate	I	IA	III	I	III
Northern Washington Intrastate	II	III	III	III	III
Olympic-Northwest Washington Intrastate	II	II	III	III	III
Portland Interstate	I	IA	III	I	I
Puget Sound Intrastate	I	IA	III	I	I
South Central Washington Intrastate	I	III	III	III	III

[37 FR 10900, May 31, 1972, as amended at 39 FR 16347, May 8, 1974; 45 FR 37836, June 5, 1980]

§ 52.2472 Extensions.

The Administrator, by authority delegated under section 188(d) of the Clean Air Act, as amended in 1990, extends for one year (until December 31, 1995) the attainment date for the Spokane, Washington, PM–10 nonattainment area and the Wallula, Washington, PM–10 nonattainment area.

[60 FR 47280, Sept. 12, 1995]

§ 52.2473 Approval status.

With the exceptions set forth in this subpart, the Administrator approves Washington's plan for the attainment and maintenance of National Standards under section 110 of the Clean Air Act. The regulations included in the SIP (See Table 52.2479) are applicable statewide unless otherwise noted in the regulation itself. Furthermore, the Administrator finds that the plan as identified in § 52.2470 satisfies requirements of Part D, Title 1, of the Clean Air act as amended in 1977, except as noted in the following sections. Continued satisfaction of the requirements of Part D for the ozone portion of the SIP depends on the adoption and submittal of RACT requirements by July 1, 1980 for the sources covered by CTGs issued between January 1978 and January 1979 and adoption and submittal by each subsequent January of additional RACT requirements for sources covered by CTGs issued by the previous January. New source review permits pursuant to section 173 of CAA will not be deemed valid by EPA unless the provisions of Section V of the emission offset interpretive rule published on January 16, 1979 (44 FR 3274) are met.

[45 FR 37836, June 5, 1980, as amended at 46 FR 45609, Sept. 14, 1981; 47 FR 7840, Feb. 23, 1982]

§ 52.2474 General requirements.

(a) *Regulation for public availability of emission data.* (1) Any person who cannot obtain emission data from the Agency responsible for making emission data available to the public, as specified in the applicable plan, concerning emissions from any source subject to emission limitations which are part of the approved plan may request that the appropriate Regional Administrator obtain and make public such

data. Within 30 days after receipt of any such written request, the Regional Administrator shall require the owner or operator of any such source to submit information within 30 days on the nature and amounts of emissions from such source and any other information as may be deemed necessary by the Regional Administrator to determine whether such source is in compliance with applicable emission limitations or other control measures that are part of the applicable plan.

(2) Commencing after the initial notification by the Regional Administrator pursuant to paragraph (b)(1) of this section, the owner or operator of the source shall maintain records of the nature and amounts of emissions from such source and any other information as may be deemed necessary by the Regional Administrator to determine whether such source is in compliance with applicable emission limitations or other control measures that are part of the plan. The information recorded shall be summarized and reported to the Regional Administrator, on forms furnished by the Regional Administrator, and shall be submitted within 45 days after the end of the reporting period. Reporting periods are January 1–June 30 and July 1–December 31.

(3) Information recorded by the owner or operator and copies of this summarizing report submitted to the Regional Administrator shall be retained by the owner or operator for 2 years after the date on which the pertinent report is submitted.

(4) Emission data obtained from owners or operators of stationary sources will be correlated with applicable emission limitations and other control measures that are part of the applicable plan and will be available at the appropriate regional office and at other locations in the state designated by the Regional Administrator.

[40 FR 55334, Nov. 28, 1975]

§ 52.2475 [Reserved]

§ 52.2476 Discretionary authority.

(a) This section applies to any variance, exception, exemption, alternative emission limitation, bubble, alternative sampling or testing method, compliance schedule revision, alternative compliance schedule, or any other substantial change to a provision of the state implementation plan, granted by the Department of Ecology, the Department of Natural Resources, the Energy Facility Site Evaluation Council, or a local air pollution control agency in accordance with any discretionary authority granted under its statutes or regulations, regardless of whether such statutes or regulations are part of the state implementation plan.

(b) Any change to a provision of the state implementation plan described in paragraph (a) of this section must be submitted by the state for approval by EPA in accordance with the requirements of 40 CFR 51.104.

(c) Any change to a provision of the state implementation plan described in paragraph (a) of this section does not modify the requirements of the federally-approved state implementation plan or a federally-promulgated implementation plan until approved by EPA as a revision to the state implementation plan in accordance with section 110 of the Clean Air Act.

[56 FR 24136, May 29, 1991]

§§ 52.2477—52.2478 [Reserved]

§ 52.2479 Contents of the federally approved, State submitted implementation plan.

The following sections of the state and local regulations and documents for the Washington State Implementation Plan for Air Quality, for compliance with requirements of the Federal Clean Air Act, have been approved by the U.S. Environmental Protection Agency (EPA), and are part of the current federally-approved, implementation plan.

WASHINGTON STATE IMPLEMENTATION PLAN FOR AIR QUALITY STATE AND LOCAL REQUIREMENTS
TABLE OF CONTENTS

Section 1—General [Dates in brackets indicate EPA approval date]

1.2 Energy Facilities Site Evaluation Council (EFSEC) Memorandum of Agreement [02/23/82]
1.3 Air Quality Monitoring, Data Reporting and Surveillance Provisions [04/15/81]
1.4 Maintenance of Pay Provision [08/14/81]

Section 2—State Regulations and Statutes [Dates in brackets indicate date state adopted]

2.2 Department of Ecology Regulations

2.2.400	WAC 173–400	General Regulation for Air Pollution Sources
	173–400–010	Policy and purpose [08/20/93]
	173–400–020	Applicability [08/20/93]
	173–400–030	Definitions [08/20/93]
	173–400–040	General standards for maximum emissions [08/20/93, except for sections (1)(c), (1)(d), (2), (4), and the second paragraph of (6)]
	173–400–050	Emission standards for combustion and incineration units [08/20/93 except for the exception provision in section (3)]
	173–400–060	Emission standards for general process units [08/20/93]
	173–400–070	Emission standards for certain source categories [08/20/93, except for section (7)]
	173–400–081	Startup and shutdown [08/20/93]
	173–400–091	Voluntary limits on emissions [08/20/93]
	173–400–100	Registration [08/20/93]
	173–400–105	Records, monitoring, and reporting [08/20/93]
	173–400–107	Excess Emissions [08/20/93]
	173–400–110	New source review (NSR) [08/20/93]
	173–400–112	Requirements for new souces in nonattainment areas [08/20/93, except for section (8)]
	173–400–113	Requirements for new sources in attainment or unclassifiable areas [08/20/93, except for section (5)]
	173–400–151	Retrofit requirements for visibility protection [08/20/93]
	173–400–161	Compliance schedules [08/20/93]
	173–400–171	Public involvement [08/20/93]
	173–400–190	Requirements for nonattainment areas [08/20/93]
	173–400–200	Creditable stack height and dispersion techniques [08/20/93]
	173–400–205	Adjustment for atmospheric conditions [08/20/93]
	173–400–210	Emission requirements of prior jurisdictions [08/20/93]
	173–400–220	Requirements for board members [08/20/93]
	173–400–230	Regulatory actions [08/20/93]
	173–400–240	Criminal penalties [08/20/93]
	173–400–250	Appeals [08/20/93]
	173–400–260	Conflict of interest [08/20/93]
2.2.402	WAC 173–402	Civil Sanctions under Washington Clean Air Act
	173–402–010	Prior regulations [06/24/80]
	173–402–020	Subsequent regulations [06/24/80]
2.2.405	WAC 173–405	Kraft Pulp Mills
	173–405–012	Statement of purpose [02/19/91]
	173–405–021	Definitions [02/19/91]
	173–405–040	Emission standards [02/19/91 except for sections (1)(b), (1)(c), (3)(b), (3)(c), (4), (7), (8), and (9)]
	173–405–045	Creditable stack height and dispersion techniques [02/19/91]
	173–405–061	More restrictive emission standards [02/19/91]
	173–405–072	Monitoring requirements [02/19/91 except section (2)]
	173–405–077	Report of startup, shutdown, breakdown or upset conditions [02/19/91]
	173–405–078	Emission inventory [02/19/91]
	173–405–086	New source review (NSR) [02/19/91]
	173–405–087	Prevention of significant deterioration (PSD) [02/19/91]
	173–405–091	Special studies [02/19/91]
2.2.410	WAC 173–410	Sulfite Pulping Mills
	173–410–012	Statement of purpose [02/19/91]
	173–410–021	Definitions [02/19/91]

WASHINGTON STATE IMPLEMENTATION PLAN FOR AIR QUALITY STATE AND LOCAL REQUIREMENTS
TABLE OF CONTENTS—Continued

	173–410–040	Emission standards [02/19/91 except sections (3) and (5)]
	173–410–045	Creditable stack height and dispersion techniques [02/19/91]
	173–410–062	Monitoring requirements [02/19/91]
	173–410–067	Report of startup, shutdown, breakdown or upset conditions [02/19/91]
	173–410–071	Emission inventory [02/19/91]
	173–410–086	New source review (NSR) [02/19/91]
	173–410–087	Prevention of significant deterioration (PSD) [02/19/91]
	173–410–100	Special studies [02/19/91]
2.2.415	WAC 173–415	Primary Aluminum Plants
	173–415–010	Statement of purpose [02/19/91]
	173–415–020	Definitions [[02/19/91 except sections (1) and (2)]
	173–415–030	Emission standards [02/19/91 except section (3)(b)]
	173–415–045	Creditable stack height and dispersion techniques [02/19/91]
	173–415–050	New source review (NSR) [02/19/91]
	173–415–051	Prevention of significant deterioration (PSD) [02/19/91]
	173–415–060	Monitoring and reporting [02/19/91 except sections (1)(a)(b)(d)]
	173–415–070	Report of startup, shutdown, breakdown or upset conditions [02/19/91]
	173–415–080	Emission inventory [02/19/91]
2.2.422	WAC 173–422	Motor Vehicle Emission Inspection
	173–422–010	Purpose [02/28/80]
	173–422–020	Definitions [02/28/80]
	173–422–030	Vehicle emission inspection requirement [02/28/80]
	173–422–040	Noncompliance areas [12/31/81]
	173–422–050	Emission contributing areas [12/31/81]
	173–422–060	Gasoline vehicle emission standards [12/31/81]
	173–422–070	Gasoline vehicle inspection procedures [12/31/81]
	173–422–090	Exhaust gas analyzer specifications [12/31/81]
	173–422–100	Testing equipment maintenance and calibration [12/31/81]
	173–422–110	Data system requirements [12/31/81]
	173–422–120	Quality assurance [02/28/80]
	173–422–130	Inspection fees [12/31/81]
	173–422–140	Inspection forms and certificates [12/31/81]
	173–422–160	Fleet and diesel owner vehicle testing requirements [12/31/81]
	173–422–170	Exemptions [12/31/81]
	173–422–180	Air quality standards [12/31/81]
2.2.425	WAC 173–425	Open Burning
	173–425–010	Purpose [09/17/90]
	173–425–020	Applicability [09/17/90]
	173–425–030	Definitions [09/17/90]
	173–425–036	Curtailment during episodes of impaired air quality [09/17/90]
	173–425–045	Prohibited materials [01/03/89]
	173–425–055	Exceptions [09/17/90]
	173–425–065	Residential open burning [09/17/90]
	173–425–075	Commercial open burning [09/17/90]
	173–425–085	Agricultural open burning [09/17/90]
	173–425–095	No burn area designation [09/17/90]
	173–425–100	Delegation of agricultural open burning program [09/17/90]
	173–425–115	Land clearing projects [09/17/90]
	173–425–120	Department of Natural Resources Smoke Management Plan [09/17/90]
	173–425–130	Notice of violation [09/17/90]
	173–425–140	Remedies [09/17/90]
2.2.430	WAC 173–430	Burning of Field and Forage and Turf Grasses Grown for Seed
	173–430–010	Purpose [09/17/90]
	173–430–020	Definitions [09/17/90]
	173–430–030	Permits, conditions, and restrictions [09/17/90]
	173–430–040	Mobile field burners [09/17/90]
	173–430–050	Other approvals [09/17/90]
	173–430–060	Study of alternatives [09/17/90]
	173–430–070	Fees [09/17/90]
	173–430–080	Certification of alternatives [09/17/90]
2.2.433	WAC 173–433	Solid Fuel Burning Device Standards
	173–433–010	Purpose [12/16/87]
	173–433–020	Applicability [12/16/87]

WASHINGTON STATE IMPLEMENTATION PLAN FOR AIR QUALITY STATE AND LOCAL REQUIREMENTS
TABLE OF CONTENTS—Continued

	173–433–030	Definitions [09/17/90]
	173–433–100	Emission performance standards [09/17/90]
	173–433–110	Opacity standards [09/17/90]
	173–433–120	Prohibited fuel types [09/17/90]
	173–433–130	General emission standards [09/17/90]
	173–433–150	Curtailment [09/17/90]
	173–433–170	Retail sales fees [01/03/89]
	173–433–200	Regulatory actions and penalties [09/17/90]
2.2.434	WAC 173–434	Solid Waste Incinerator Facilities
	173–434–010	Purpose [09/17/90]
	173–434–020	Applicability [09/17/90]
	173–434–030	Definitions [09/17/90]
	173–434–050	New source review (NSR) [09/17/90]
	173–434–070	Prevention of significant deterioration (PSD) [09/17/90]
	173–434–090	Operation and maintenance plan [09/17/90]
	173–434–100	Requirement for BACT [09/17/90]
	173–434–130	Emission standards [09/17/90 except section (2)]
	173–434–160	Design and operation [09/17/90]
	173–434–170	Monitoring and reporting [09/17/90]
	173–434–190	Changes in operation [09/17/90]
	173–434–200	Emission inventory [09/17/90]
	173–434–210	Special studies [09/17/90]
2.2.435	WAC 173–435	Emergency Episode Plan
	173–435–010	Purpose [01/03/89]
	173–435–015	Significant harm levels [01/03/89]
	173–435–020	Definitions [01/03/89]
	173–435–030	Episode stage criteria [01/03/89]
	173–435–040	Source emission reduction plans [01/03/89]
	173–435–050	Action procedures [01/03/89]
	173–435–060	Enforcement [01/03/89]
	173–435–070	Sampling sites, equipment, and methods [01/03/89 except section (1)]
2.2.440	WAC 173–440	Sensitive Areas
	173–440–010	Purpose [09/17/90]
	173–440–020	Applicability [09/16/87]
	173–440–030	Definitions [09/17/90]
	173–440–040	Sensitive areas designated [09/16/87]
	173–440–100	Standards [09/17/90]
	173–440–900	Appendix A—Map [09/16/87]
2.2.470	WAC 173–470	Ambient Air Quality Standards for Particulate Matter
	173–470–010	Purpose [09/16/87]
	173–470–020	Applicability [09/16/87]
	173–470–030	Definitions [01/03/89]
	173–470–100	Ambient air quality standards [01/03/89]
	173–470–160	Reporting of data [09/16/87]
2.2.490	WAC 173–490	Emission Standards and Controls for Sources Emitting Volatile Organic Compounds
	173–490–010	Policy and purpose [02/19/91]
	173–490–020	Definitions [02/19/91]
	173–490–025	General applicability [02/19/91]
	173–490–030	Registration and reporting [02/19/91]
	173–490–040	Requirements [02/19/91]
	173–490–080	Exceptions and alternative methods [02/19/91]
	173–490–090	New source review (NSR) [02/19/91]
	173–490–200	Petroleum refinery equipment leaks [02/19/91]
	173–490–201	Petroleum liquid storage in external floating roof tanks [02/19/91]
	173–490–202	Leaks from gasoline transport tanks and vapor collection systems [02/19/91]
	173–490–203	Perchloroethylene dry cleaning systems [02/19/91]
	173–490–204	Graphic arts systems [02/19/91]
	173–490–205	Surface coating of miscellaneous metal parts and products [02/19/91]
	173–490–207	Surface coating of flatwood paneling [02/19/91]
	173–490–208	Aerospace assembly and component coating operations [02/19/91]
2.2.490	WAC 173–492	Motor Fuel Specifications for Oxygenated Gasoline

WASHINGTON STATE IMPLEMENTATION PLAN FOR AIR QUALITY STATE AND LOCAL REQUIREMENTS
TABLE OF CONTENTS—Continued

	173–492–010	Policy and purpose [10/07/92]
	173–492–020	Applicability [10/07/92]
	173–492–030	Definitions [10/07/92]
	173–492–060	Labeling requirements [10/07/92]
	173–492–070	Control areas and control periods [10/07/92]
2.3.EFSEC	Energy Facilities Site Evaluation Council Regulation (EFSEC)	
2.3.463–39	WAC 463–39	General Regulations for Air Pollution Sources
	463–39–010	Purpose [07/23/79]
	463–39–020	Applicability [07/23/79]
	463–39–030	Additional definitions [07/23/79 except sections (4), (7), (10), (24), (25), (30), (35), and (36)]
	463–39–040	General standards for maximum permissible emissions [07/23/79 except introductory paragraph]
	463–39–050	Minimum emission standards for combustion and incineration sources [07/23/79]
	463–39–060	Minimum emission standards for general process sources [07/23/79]
	463–39–080	Compliance schedules [07/23/79]
	463–39–100	Registration [07/23/79]
	463–39–110	New source review (NSR) [07/23/79 except sections (1), the first two sentences of (3)(b), (3)(c), (d), and (e)]
	463–39–120	Monitoring and special report [07/23/79]
	463–39–130	Regulatory actions [07/23/79]
	463–39–135	Criminal penalties [07/23/79]
	463–39–150	Variance [07/23/79]
	463–39–170	Conflict of interest [07/23/79]

Section 3—Local Air Authority Regulations [Dates in brackets indicate local air authority adoption date]

3.NW	Northwest Air Pollution Authority (NWAPA)	
	100	Name of Authority [02/10/93]
	101	Short Title [02/10/93]
	102	Policy [02/10/93]
	103	Duties and Powers [04/14/93]
	104	Adoption of State and Federal Laws and Rules [10/13/94]
	105	Separability [01/08/69]
	106	Public Records [01/08/69]
	110	Investigation and Studies [01/08/69]
	111	Interference or Obstruction [02/14/73]
	112	False and Misleading Oral Statements [02/14/73]
	113	Service of Notice [02/14/73]
	114	Confidential Information [04/14/93]
	120	Hearings [04/14/93]
	121	Orders [11/15/88]
	122	Appeals from Orders or Violations [11/15/88]
	123	Status of Orders on Appeal [11/15/88]
	124	Display of Orders [02/14/73]
	130	Citations—Notices [02/14/73]
	131	Violations—Notices [04/14/93]
	132	Criminal Penalty [10/13/94]
	133	Civil Penalty [10/13/94]
	134	Restraining Orders—Injunction [02/10/93]
	135	Additional Enforcement—Compliance schedules [04/14/93]
	140	Reporting By Government Agencies [04/14/93]
	145	Motor Vehicle Owner Responsibility [02/14/73]
	150	Pollutant Disclosure—Reporting by Air Contaminant Sources [09/08/93]
	200	Definitions [10/13/94]
		Control Procedures
	300	Notice of Construction When Required [10/13/94]
	301	Information Required for Notice of Construction [10/13/94]
	302	Issuance of Approval or Order [10/13/94]

WASHINGTON STATE IMPLEMENTATION PLAN FOR AIR QUALITY STATE AND LOCAL REQUIREMENTS
TABLE OF CONTENTS—Continued

303	Notice of Completion—Notice of Violation [08/09/78]
310	Approval to Operate Required [04/14/93]
320	Registration Required [04/14/93]
321	General Requirements for Registration [04/14/93]
322	Exemptions from Registration [10/13/94]
323	Classes of Registration [4/14/93]
324	Fees [10/13/94, except section .121]
325	Transfer [04/14/93]
340	Report of Breakdown and Upset [10/13/94]
341	Schedule Report of Shutdown or Start-up [09/08/93]
342	Operation and Maintenance [09/08/93]
360	Testing and Sampling [02/14/73]
365	Monitoring [02/08/89]
366	Instrument Calibration [09/08/93]
	Standards
400	Ambient Air Standards—Forward [04/14/93]
401	Suspended Particulate Standards (PM–10) [04/14/93]
410	Sulfur Oxide Standards [04/14/93]
420	Carbon Monoxide Standards [04/14/93]
422	Nitrogen Oxide Standards [4/14/93]
424	Ozone Standards [04/14/93]
450	Emission Standards—Forward [04/14/93]
451	Emission of Air Contaminant—Visual Standards [10/13/94]
452	Motor Vehicle Visual Standard [04/14/93, except section .5]
455	Emission of Particulate Matter [04/14/93]
458	Incinerators—Wood Waste Burners [08/08/78]
460	Sulfur Compounds—Heat/Weight Rate Standard [04/14/93]
462	Sulfur Compounds—Emission Standard [04/14/93]
466	Portland Cement Plants [04/14/93]
	Regulated Activities and Prohibitions
510	Incinerator Burning [04/14/93]
520	Sulfur Compounds in Fuel [04/14/93]
550	Particulate Matter from Becoming Airborne [01/08/69]
560	Storage of Organic Liquids [04/14/93]
580	Volatile Organic Compound Control (VOC) [10/13/94]

3.PS Puget Sound Air Pollution Control Agency (PSAPCA)
3.PS.1 Regulation I

	Article 1—Policy, short title, and definitions
Section 1.01	Policy [10/10/73]
Section 1.03	Name of agency [03/13/68]
Section 1.05	Short title [03/13/68]
Section 1.07	General definitions [04/14/94]
	Article 3—General provisions
Section 3.01	Duties and powers of the control officer [02/10/94]
Section 3.05	Investigation by control officer [02/10/94]
Section 3.07	Compliance tests [02/10/94]
Section 3.09	Violations—notice [08/08/91]
Section 3.11	Civil Penalties [09/08/94]
Section 3.13	Criminal Penalties [08/08/91]
Section 3.15	Additional Enforcement [08/08/91]
Section 3.17	Appeal of Orders [08/08/91]
Section 3.19	Confidential Information [08/08/91]
Section 3.21	Separability [08/08/91]
	Article 5—Registration
Section 5.02	Definition and Components of Registration Program [12/09/82]
Section 5.03	Registration Required [02/10/94]
Section 5.05	General Requirements for Registration [08/09/90]
Section 5.07	Registration and Operating Permit Fees [09/08/94]

WASHINGTON STATE IMPLEMENTATION PLAN FOR AIR QUALITY STATE AND LOCAL REQUIREMENTS
TABLE OF CONTENTS—Continued

Section 5.08 Shut Down Sources [11/12/87]
Section 5.11 Registration of Oxygenated Gasoline Blenders [10/14/93]

Article 6—New Source Review

Section 6.03 Notice of construction [11/19/92]
Section 6.04 Notice of construction review fees [10/28/93]
Section 6.06 Public notice [04/14/94]
Section 6.07 Order of approval—order to prevent construction [04/14/94]
Section 6.08 Emission reduction credit banking [11/19/92]
Section 6.09 Notice of completion [04/14/94]
Section 6.10 Work done without an approval [07/08/93]

Article 8—Outdoor fires

Section 8.01 Policy [04/09/92]
Section 8.02 Outdoor fires—prohibited types [05/13/93]
Section 8.03 Outdoor fires—prohibited areas [04/14/94]
Section 8.04 General conditions [04/14/94]

Article 9—Emission standards

Section 9.03 Emission of air contaminant: visual standard [09/08/94]
Section 9.04 Deposition of particulate matter [06/09/83]
Section 9.05 Refuse burning [12/09/93]
Section 9.07 Sulfur dioxide emission standard [04/14/94]
Section 9.08 Fuel oil standards [04/14/94]
Section 9.09 Particulate matter emission standards [02/10/94]
Section 9.11 Emission of air contaminant: detriment to person or property [06/09/83]
Section 9.13 Emission of air contaminant: concealment and masking restricted [06/09/88]
Section 9.15 Fugitive dust: emission standard [08/10/89]
Section 9.16 Spray coating operations [06/13/91]
Section 9.20 Maintenance of equipment [06/09/88]

Article 11—Ambient air quality standards and control measures required

Section 11.01 Air quality control standards [04/14/94]
Section 11.02 Ambient air monitoring [04/14/94]

Article 12—Standards of performance for continuous emission monitoring systems

Section 12.01 Introduction [08/10/89]
Section 12.02 Continuous emission monitoring requirements [08/10/89]
Section 12.03 Quality assurance requirements [08/10/89]
Section 12.04 Record keeping and reporting requirements [08/10/89]

Article 13—Solid fuel burning device standards

Section 13.01 Policy and purpose [09/26/91]
Section 13.03 Opacity standards [10/11/90]
Section 13.04 Prohibited fuel types [09/26/91]
Section 13.05 Curtailment [09/26/91]

3.PS.2—Regulation II

Article 1—Purpose, policy, short title, and definitions

Section 1.01 Purpose [03/13/80]
Section 1.02 Policy [06/13/91]
Section 1.03 Short title [12/11/80]
Section 1.04 General definitions [12/11/80]
Section 1.05 Special definitions [02/10/94]

Article 2—Gasoline marketing emission standards

Section 2.03 Petroleum refineries [06/13/91]
Section 2.04 Volatile organic compound storage tanks [06/13/91]
Section 2.05 Gasoline loading terminals [12/09/93]
Section 2.06 Bulk gasoline plants [06/13/91]
Section 2.07 Gasoline stations [02/10/94]
Section 2.08 Leaks from gasoline transport tanks and vapor recovery system [06/13/91]
Section 2.09 Oxygenated gasoline [05/12/94]

WASHINGTON STATE IMPLEMENTATION PLAN FOR AIR QUALITY STATE AND LOCAL REQUIREMENTS
TABLE OF CONTENTS—Continued

Article 3—Miscellaneous volatile organic compound emission standards

Section 3.01 Cutback asphalt paving [06/13/91]
Section 3.03 Can and paper coating operations [02/10/94]
Section 3.04 Motor vehicle and mobile equipment coating operations [12/09/93]
Section 3.05 Graphic arts systems [12/09/93]
Section 3.07 Petroleum solvent dry cleaning systems [02/11/82]
Section 3.08 Polyester, vinylester, gelcoat, and resin operations [12/09/93]
Section 3.09 Aerospace component coating operations [12/09/93]
Section 3.11 Coatings and ink manufacturing [12/09/93]

3.PS.3—Regulation III

Article 1—General requirements

Section 1.01 Policy [02/11/93]
Section 1.02 Short title [01/09/92]
Section 1.03 Area sources of toxic air contaminants [08/09/90]
Section 1.05 Purpose and approach [08/09/90]
Section 1.07 General definitions [01/09/92]
Section 1.08 Special definitions [07/08/93]
Section 1.11 Reporting requirements [08/09/90]

Article 2—Review of toxic air contaminant sources

Section 2.01 Applicability [04/14/94]
Section 2.05 Registered sources of toxic air contaminants [04/14/94]

Article 3—Source-specific emission standards

Section 3.01 Chromic acid plating and anodizing [12/09/93]
Section 3.03 Perchloroethylene dry cleaners [01/09/92]
Section 3.05 Solvent metal cleaners [08/09/90]
Section 3.07 Ethylene oxide sterilizers and aerators [01/09/92]

Article 4—Asbestos control standard

Section 4.01 Application requirements and fees [07/08/93]
Section 4.02 Procedures for asbestos emission control [07/08/93]
Section 4.03 Disposal of asbestos-containing waste material [02/11/93]

Appendix A—Acceptable source impact level [10/14/94]

3.SC Spokane County Air Pollution Control Authority (SCAPCA)
3.SC.2 Regulation II

Article IV—Emission prohibited

Section 4.01 Particulate emissions—grain loading restrictions [01/06/75]

Section 4—Regional Air Quality Plans [Dates in brackets indicate EPA approval date]

4.1 Olympic-Northwest Washington Intrastate
4.1.2 Attainment Plans
4.1.2.PM Particulate Matter (PM_{10})
4.1.2.PM.1 Thurston County PM_{10} [07/27/93]
4.1.2.TSP Total Suspended Particulates (TSP)
4.1.2.TSP.1 Longview TSP [06/05/80]
4.2 Puget Sound Intrastate
4.2.2 Attainment Plans
4.2.2.CO Carbon Monoxide (CO)
4.2.2.CO.1 Seattle CO [02/28/83]
4.2.2.CO.2 Tacoma CO [07/16/84]
4.2.2.CO.3 Puget Sound CO section 5.2 [01/22/93]
4.2.2.OZ Ozone (O_3)
4.2.2.OZ.1 Seattle-Tacoma O_3 [02/28/83]
4.2.2.PM Particulate Matter (PM_{10})
4.2.2.PM.1 Kent PM_{10} [07/27/93]
4.2.2.PM.2 Seattle PM_{10} [conditional approval 08/22/94]

WASHINGTON STATE IMPLEMENTATION PLAN FOR AIR QUALITY STATE AND LOCAL REQUIREMENTS
TABLE OF CONTENTS—Continued

4.2.2.PM.3	Tacoma PM_{10} [conditional approval 12/12/94]
4.2.3	Lead Implementation Plan [04/01/85]
4.3 Southwest Washington Interstate	
4.3.2	Attainment Plans
4.3.2.CO	Carbon Monoxide (CO)
4.3.2.CO.1	Vancouver CO [12/30/94]
4.3.2.OZ	Ozone (O_3)
4.3.2.OZ.1	Vancouver O3 [11/14/94]
4.3.2.TSP	Total Suspended Particulates (TSP)
4.3.2.TSP.1	Vancouver TSP [09/14/81]
4.5	Eastern Washington Interstate
4.5.2	Attainment Plans
4.5.2.CO	Carbon Monoxide (CO)
4.5.2.CO.1	Spokane CO [03/22/82]
4.5.2.CO.1a	Spokane CO section 5.2 [01/22/93]
4.5.2.TSP	Total Suspended Particulates (TSP)
4.5.2.TSP.1	Spokane TSP [09/14/81]
4.6 South Central Washington Intrastate	
4.6.2	Attainment Plans
4.6.2.CO	Carbon Monoxide (CO)
4.6.2.CO.1	Yakima CO [09/14/81]

Section 5—Federally Mandated Programs [Dates in brackets indicate EPA approval date]

5.BAP Business Assistance Program [05/08/95]
5.IM Motor Vehicle Inspection/Maintenance [06/05/80]
5.OXY Oxygenated Gasoline Program [01/20/94]
5.SMP Smoke Management Program [05/04/87]
5.VIS Washington State Visibility Protection Program [05/04/87]
5.VIS.NSR Visibility New Source Review (NSR) for nonattainment areas for Washington [06/26/86]

Supplemental Section A—Reference Material [Dates in brackets indicate EPA approval date]

A.1 Description of Source Test Program for the State Implementation Plan [10/24/84]

Supplemental Section B—Administrative and Procedural Material [Dates in brackets indicate EPA approval date]

B.3 Correspondence
B.3.1 Legal Authority [06/05/80]
B.3.2 Correspondence—Prior to 1991
B.3.2.1 New Source Performance Standards (NSPS) for Tri-Counties [09/23/81]

[60 FR 33735, June 29, 1995]

§§ 52.2480—52.2494 [Reserved]

§ 52.2495 Voluntary limits on potential to emit

Terms and conditions of regulatory orders issued pursuant to WAC 173–400–091 ''Voluntary limits on emissions'' and in accordance with the provisions of WAC 173–400–091, WAC 173–400–105 ''Records, monitoring, and reporting,'' and WAC 173–400–171 ''Public involvement,'' shall be applicable requirements of the federally-approved Washington SIP and Section 112(l) program for the purposes of section 113 of the Clean Air Act and shall be enforceable by EPA and by any person in the same manner as other requirements of the SIP and Section 112(l) program. Regulatory orders issued pursuant to WAC 173–400–091 are part of the Washington SIP and shall be submitted to EPA Region 10 in accordance with the requirements of §§ 51.104(e) and 51.326.

[60 FR 28728, June 2, 1995]

§52.2496 [Reserved]

§52.2497 Significant deterioration of air quality.

(a) The requirements of sections 160 through 165 of the Clean Air Act are not met, since the plan does not include approvable procedures for preventing the significant deterioration of air quality.

(b) Regulations for preventing significant deterioration of air quality. The provisions of §52.21 (b) through (w) are hereby incorporated and made a part of the applicable state plan for the State of Washington.

(c) In accordance with section 164 of the Clean Air Act and the provisions of 40 CFR 52.21(g), the Spokane Indian Reservation is designated as a Class I area for the purposes of preventing significant deterioration of air quality.

[43 FR 26410, June 19, 1978, as amended at 45 FR 52741, Aug. 7, 1980; 56 FR 14862, Apr. 12, 1991]

§52.2498 Visibility protection.

(a) The requirements of section 169A of the Clean Air Act are not met, because the plan does not include approvable procedures for protection of visibility in mandatory Class I Federal areas.

(b) Regulations for visibility new source review. The provisions of §52.28 are hereby incorporated and made a part of the applicable plan for the State of Washington.

[51 FR 23228, June 26, 1986]

Subpart XX—West Virginia

§52.2520 Identification of plan.

(a) Title of plan: ''State of West Virginia Implementation Plan to Achieve and Maintain Air Quality Standards for Particulates, Sulfur Oxides, Nitrogen Oxides, Carbon Monoxide, Hydrocarbons, and Oxidants.''

(b) The plan was officially submitted on January 27, 1972.

(c) The plan revisions listed below were submitted on the dates specified.

(1) Addition to the plan regarding legal authority to enforce State laws in the City of Wheeling submitted on March 30, 1972, by the West Virginia Air Pollution Control Commission.

(2) Addition to the plan clarifying Resources section of SIP submitted April 20, 1972, by the West Virginia Air Pollution Control Commission.

(3) Revision to plan regarding ''Permit to Construct'' rule, Regulation XIII of the West Virginia Air Pollution Control Regulations, submitted May 5, 1972, by the West Virginia Air Pollution Control Commission.

(4) Revision to the plan allowing John E. Amos power plant variance to sulfur-in-fuel regulations submitted November 14, 1973, by the West Virginia Air Pollution Control Commission.

(5) AQMA designations were submitted on June 13, 1974, by the Governor of West Virginia.

(6) Indirect Source Review plan submitted on June 17, 1974, by the West Virginia Air Pollution Control Commission.

(7) Particulate matter regulation for Primary aluminum plants submitted on November 8, 1974, by the West Virginia Air Pollution Control Commission.

(8) Deletion of secondary annual and 24 hour sulfur dioxide standards from Regulation VIII submitted on March 16, 1976 by the Governor of West Virginia.

(9) Amendments to regulation X (to prevent and control air pollution from the emission of sulfur oxides) (section 2.07 added), section 2.08 (former section 2.07), section 2.09 (former section 2.08), section 2.10 (former section 2.09), section 2.11 (former section 2.10), section 2.12 (former section 2.11), section 2.13 (former section 2.12), section 2.14 (former section 2.13), section 2.15 (former section 2.14), section 2.16 (former section 2.15), section 3.01 is superseded by new section 3.01 except section 3.01(1) Kammer Power Station which retains the old section 3.01(a), section 3.02 is replaced by new section 3.02, section 3.03 is superseded by new section 3.03 except for section 3.03(2) Rivesville Power Station, which retains the old section 3.03(a) and section 3.01(b), section 3.03(1) (Harrison Power Plant) is approved as an interim emission limitation only, sections 3.05, 3.06, and 3.07 (added), section 3.08 (former section 3.05), section 6.01 is superseded by new section 6.01, new section 10 is

added, section 11 (replaces former section 10) of the West Virginia Administrative Regulations submitted on January 25, 1978 (as amended September 13, 1978), by the Governor.

(10) Revised plans for attaining primary air quality standards for TSP and SO_2 submitted to EPA by the Governor of West Virginia on June 18, 1979. These plans are contained in a document entitled, ''Revisions to the State Implementation Plan to Achieve and Maintain Air Quality Standards for Particulates, Sulfur Oxides, and Ozone.''

(11) Revised plan for attaining the ozone standard submitted to EPA by the Governor of West Virginia on November 21, 1979.

(12) Revised Regulations III and VIII, and new Regulations XXI, XXIII, and XXIV, submitted to EPA by the Governor of West Virginia on December 19, 1979.

(13) Amended Sections 3.01(2) and 3.03(1) of Regulation X (to prevent and control air pollution from the emission of sulfur oxides), submitted on January 25, 1978 and amended September 13, 1978 by the Governor.

(14) Amended Regulations VI and VII, and an Identification and Analysis of the Impact of the 1979 West Virginia State Implementation Plan, submitted by the Governor of West Virginia on June 13, 1980.

(15) An Implementation Plan for lead submitted by the Governor of West Virginia on June 13, 1980, and supplementary information subsequently submitted to show that lead sources would be subject to new source review.

(16) Test Procedure for Quantifying Emissions From Bulk Gasoline Loading Terminals, submitted by the Governor of West Virginia on November 6, 1980.

(17) West Virginia's plans for attaining the secondary National Ambient Air Quality Standard for total suspended particulate submitted by the Governor of West Virginia on November 14, 1980.

(18) The consent order allowing alternative emission limitations for the Mountaineer Carbon Company, Moundsville, West Virginia, submitted on July 2, 1982 by the West Virginia Air Pollution Control Commission.

(19) Consent Order dated July 6, 1982 between National Steel Corporation, Weirton Steel Division and the West Virginia Air Pollution Control Commission submitted on July 6, 1982 by Mr. Donald R. Richardson providing for an alternate emission control plan (bubble) for the Weirton, West Virginia steel mill.

(20) Amended Regulation VII of the West Virginia Air Pollution Control Regulations submitted by the West Virginia Air Pollution Control Commission on April 29, 1983.

(21) A revision submitted by the State of West Virginia on November 4, 1983 which establishes an Ambient Air Quality Monitoring Network.

(22) Amended Regulation XIX of the West Virginia Air Pollution Control Regulations submitted by the West Virginia Air Pollution Control Commission on April 29, 1983.

(23) Regulation XIV (Permits for Construction and Major Modification of Major Stationary Sources of Air Pollution for the Prevention of Significant Deterioration) and a commitment letter submitted on June 13, 1984, and December 16, 1985, respectively, by the Chairman of the West Virginia Air Pollution Control Commission.

(i) Incorporation by reference.

(A) Regulation XIV (Permits for the Construction and Major Modification of Major Stationary Sources of Air Pollution for the Prevention of Significant Deterioration) adopted by the State of West Virginia on June 14, 1984.

(B) Letter of December 16, 1985, in which the West Virginia Air Pollutant Control Commission committed to comply with the July 8, 1985 rulemaking notice concerning stack heights in its PSD permitting.

(24) Revisions to the State Implementation Plan submitted by the West Virginia Air Pollution Control Commission.

(i) Incorporation by reference.

(A) Letter from the West Virginia Air Pollution Control Commission dated September 14, 1990, submitting a revision to the West Virginia State Implementation Plan.

(B) A Consent Order, dated and effective September 12, 1990, issued by the West Virginia Air Pollution Control Commission to the Columbia Gas

Transmission Corporation limiting the emissions and operation of a compressor engine at its Lost River Compressor Station in Mathias, Hardy County, West Virginia.

(ii) Additional materials—remainder of the State submittal.

(25) As of July 7, 1993 the rules in this paragraph (c)(25) are superseded by the rules contained in paragraph (c)(33) of this section. Revisions to the State Implementation Plan submitted by the West Virginia Air Pollution Control Commission, which define and impose RACT to control volatile organic compound emissions from bulk gasoline terminals, petroleum refineries, and storage of petroleum liquids in fixed roof tank facilities.

(i) Incorporation by reference.

(A) A letter from the West Virginia Air Pollution Control Commission dated June 4, 1991, submitting a revision to the West Virginia State Implementation Plan.

(B) Amendments to Series 21, 23, and 24 of the regulations of the West Virginia Air Pollution Control Commission, submitted June 4, 1991, and effective May 6, 1991.

(ii) Additional materials.

(A) The nonregulatory portions of the state submittal.

(26) Bilateral consent orders between the West Virginia Air Pollution Control Commission and six companies to limit emissions of particulate matter. The effective date of the consent order with Koppers is November 15, 1991; the effective date of the five other orders cited in paragraph (i)(B), below, is November 14, 1991.

(i) Incorporation by reference.

(A) Letter dated November 12, 1991 from the West Virginia Department of Commerce, Labor, and Environmental Resources transmitting six consent orders.

(B) Consent orders with the following companies (West Virginia order number and effective date in parentheses): Follansbee Steel Corporation (CO-SIP–91–31, November 14, 1991); International Mill Service, Incorporated (CO-SIP–91–33, November 14, 1991); Koppers Industries, Incorporated (CO-SIP–91–32, November 15, 1991); Standard Lafarge (CO-SIP–91–29, November 14, 1991); Starvaggi Industries, Incorporated (CO-SIP–91–34, November 14, 1991); and Wheeling-Pittsburgh Steel Corporation (CO-SIP–91–29, November 14, 1991).

(27) Revision to the State implementation plan consisting of a good engineering practice (GEP) for stack heights regulation as submitted by the Secretary, West Virginia Department of Commerce, Labor, and Environmental Resources on April 2, 1990:

(i) Incorporation by reference.

(A) Letter from the Secretary, Department of Commerce, Labor, and Environmental Resources dated April 2, 1990, submitting a revision to the West Virginia State implementation plan.

(B) Regulation 20 (45CSR20)—''Good Engineering Practice as Applies to Stack Heights'' adopted by the State of West Virginia on April 8, 1989. The regulation became effective on July 14, 1989.

(ii) Additional materials.

(A) Remainder of the State implementation plan revision submitted by the West Virginia Department of Commerce, Labor, and Environmental Resources on April 2, 1990.

(28) Revisions to the State Implementation Plan submitted by the West Virginia Department of Commerce, Labor, and Environmental Resource on August 15, 1990.

(i) Incorporation by reference.

(A) Letter from the West Virginia Department of Commerce, Labor, and Environmental Resources dated August 15, 1990 submitting a revision to the West Virginia State Implementation Plan.

(B) Amendments to the West Virginia Code Chapter 16, Article 20—Regulation VIII—''Ambient Air Quality Standards for Sulfur Oxides and Particulate Matter''; Regulation XI—''Prevention of Air Pollution Emergency Episodes''; and Regulation XIV—'' Permits for Construction and Major Modification of Major Stationary Sources of Air Pollution for the Prevention of Significant Deterioration''. All three rules were adopted on March 19, 1990 and became effective April 25, 1990.

(ii) Additional materials.

(A) Remainder of the State Implementation Plan revision request submitted by the West Virginia Department of Commerce, Labor, and Environmental Resources on August 15, 1990.

(29) Revisions to the State Implementation Plan submitted by the Secretary, West Virginia Department of Commerce, Labor, and Environmental Resources on April 2, 1990.

(i) Incorporation by reference.

(A) Letter from the Secretary, Department of Commerce, Labor, and Environmental Resources dated April 2, 1990 submitting a revision to the West Virginia State Implementation Plan.

(B) WVAPCC Rule TP–2—''Compliance Test Procedures for Regulation II—'To Prevent and Control Particulate Air Pollution From Combustion of Fuel in Indirect Heat Exchangers'' adopted by the State of West Virginia on April 8, 1989.

(ii) Additional materials.

(A) Remainder of the State Implementation Plan revision request submitted by the West Virginia Department of Labor, Commerce, and Environmental Resources on April 2, 1990.

(30) The ten year ozone maintenance plan including emission projections and contingency measures for Huntington, West Virginia (Cabell and Wayne counties) as revised and effective on August 10, 1994 and submitted by the West Virginia Division of Environmental Protection:

(i) Incorporation by reference.

(A) The ten year ozone maintenance plan including emission projections and contingency measures for Huntington, West Virginia (Cabell and Wayne counties) revised and effective on August 10, 1994.

(31) The ten year ozone maintenance plan including emission projections and contingency measures for Parkersburg, West Virginia (Wood County) as revised and effective on August 10, 1994 and submitted by the West Virginia Division of Environmental Protection; Office of Air Quality:

(i) Incorporation by reference.

(A) The ten year ozone maintenance plan including emission projections and contingency measures for Parkersburg, West Virginia (Wood County) revised and effective on August 10, 1994.

(32) The ten year ozone maintenance plan including emission projections and contingency measures for Charleston, West Virginia (Kanawha and Putnam Counties), as revised and effective on August 10, 1994 and submitted by the West Virginia Division of Environmental Protection; Office of Air Quality:

(i) Incorporation by reference.

(A) The ten year ozone maintenance plan including emission projections and contingency measures for the Charleston, West Virginia (Kanawha and Putnam Counties) revised and effective August 10, 1994.

(33) Revisions to the West Virginia State Implementation Plan submitted on August 12, 1993 by the West Virginia Department of Commerce, Labor & Environmental Resources.

(i) Incorporation by reference.

(A) Letter of August 10, 1993 from the West Virginia Department of Commerce, Labor & Environmental Resources transmitting Title 45 Legislative Rules, Series 21, Regulation to Prevent and Control Air Pollution from Emission of Volatile Organic Compounds.

(B) Title 45 Legislative Rules, Series 21, Regulation to Prevent and Control Air Pollution from Emission of Volatile Organic Compounds, sections 1, 2, 3, 4, 5, 6, 7, 8, 9, 11, 12, 14, 15, 16, 17, 18, 19, 21, 22, 23, 24, 25, 26, 27, 28, 29, 31, 36, 39, 41, 42, 43, 44, 45, 46, 47, and 48, and Appendix A, which were adopted May 26, 1993 and effective July 7, 1993.

(ii) Additional material.

(A) Remainder of August 10, 1993 State submittal pertaining to the rules referenced in paragraph (c)(33)(i) of this section.

(iii) Additional information.

(A) The rules in this paragraph (c)(33) supersede the rules contained in paragraph (c)(25) of this section.

(34) Revisions to the West Virginia State Implementation Plan submitted by the Secretary, West Virginia Department of Commerce, Labor, and Environmental Resources, Office of Air Quality, on August 10, 1993.

(i) Incorporation by reference.

(A) Letter dated August 10, 1993 from the Secretary, West Virginia Department of Commerce, Labor, and Environmental Resources, Office of Air

Quality submitting 45 Code of State Regulations (CSR) Series 29 ''Rule Requiring the Submission of Emission Statements for Volatile Organic Compounds and Oxides of Nitrogen Emissions'' as a revision to the West Virginia State Implementation Plan. The effective date of this rule, 45CSR29 is July 7, 1993.

(B) West Virginia Regulation Title 45, Series 29, ''Rule Requiring the Submission of Emission Statements for Volatile Organic Compounds and Oxides of Nitrogen Emissions,'' consisting of Subsections: 1. General; 2. Definitions; 3. Applicability; 4. Compliance Schedule; 5. Emission Statement Requirements; 6. Enforceability; and 7. Severability, effective July 7, 1993.

(ii) Additional Material.

(A) Remainder of August 10, 1993 State submittal pertaining to 45 CSR Series 29, ''Rule Requiring the Submission of Emission Statements for Volatile Organic Compounds and Oxides of Nitrogen Emissions.''

(B) [Reserved]

(35) [Reseved]

(36) The ten year ozone maintenance plan including emission projections and contingency measures for Greenbrier County, West Virginia effective on September 1, 1994 and submitted by the West Virginia Division of Environmental Protection:

(i) Incorporation by reference.

(A) Letter of September 9, 1994 from the West Virginia Division of Environmental Quality transmitting the ozone maintenance plan for Greenbrier County.

(B) The ten year ozone maintenance plan including emission projections and contingency measures for Greenbrier County, West Virginia effective on September 1, 1994.

(ii) Additional Material.

(A) Remainder of September 9, 1994 State submittal pertaining to the maintenance plan referenced in paragraph (c)(36)(i) of this section.

(B) [Reserved]

(37) Revisions to the West Virginia State Implementation Plan submitted on May 16, 1995 by the West Virginia Division of Environmental Protection:

(i) Incorporation by reference.

(A) Letter of May 16, 1995 from West Virginia Division of Environmental Protection, transmitting the General Conformity Rule.

(B) Title 45, Legislative Rule, Series 35 (45CSR35), Requirements for Determining Conformity of General Federal Actions to Applicable Air Quality Implementation Plans (General Conformity), effective May 1, 1995.

(ii) Additional material.

(A) Remainder of May 16, 1995 State submittal pertaining to 45CSR35 referenced in paragraph (c)(37) of this section.

[37 FR 10901, May 31, 1972]

EDITORIAL NOTE: For FEDERAL REGISTER citations affecting § 52.2520, see the List of CFR Sections Affected in the Finding Aids section of this volume.

§ 52.2521 Classification of regions.

The West Virginia plan was evaluated on the basis of the following classifications:

Air quality control region	Pollutant				
	Particulate matter	Sulfur oxides	Nitrogen dioxide	Carbon monoxide	Photochemical oxidants (hydrocarbons)
Steubenville-Weirton-Wheeling Interstate	I	I	III	III	III
Parkersburg-Marietta Interstate	I	II	III	III	III
Huntington-Ashland-Portsmouth-Ironton Interstate	I	III	III	III	III
Kanawha Valley Intrastate	I	III	III	III	III
Southern West Virginia Intrastate	III	III	III	III	III
North Central West Virginia Intrastate	I	III	III	III	III
Cumberland-Keyser Interstate	I	I	III	III	III
Central West Virginia Intrastate	III	III	III	III	III
Allegheny Intrastate	III	III	III	III	III
Eastern Panhandle Intrastate	III	III	III	III	III

[37 FR 10902, May 31, 1972]

§ 52.2522 Approval status.

With the exceptions set forth below in this subpart, the Administrator approves West Virginia's plan for the attainment and maintenance of the national standards.

(a) The Administrator approves the deletion of the provisions found in section 3.03(b) of regulation X except as it applies to the Rivesville plant, Monongahela Power Co.

(b) The Administrator hereby extends the interim limitation of 5.12 lbs. SO_2 per million BTU for the Harrison power plant until a permanent emission limitation is approved.

(c) The Administrator approves the amended Sections 3.01(2) and 3.03(1) of West Virginia Air Pollution Control Commission Regulation X submitted January 25, 1978 and amended September 13, 1978, as a plan for attainment of the primary SO_2 NAAQS. The Administrator does not approve the State's control strategy for attainment and maintenance of the secondary SO_2 NAAQS submitted on those dates, so far as it applies to the Mitchell and Harrison power stations.

(d) The Administrator approves West Virginia's November 15, 1991 SIP submittal for fulfilling all PM–10-specific requirements of part D of the Clean Air Act applicable to the Follansbee, West Virginia PM–10 nonattainment area, except for the section 189(a)(1)(B) requirement for a demonstration that the plan is sufficient to attain the PM–10 NAAQS, which the Administrator is disapproving, and the section 172(c)(9) requirement for contingency measures, which the Administrator has yet to act upon.

[38 FR 16170, June 20, 1973, as amended at 45 FR 39255, June 10, 1980; 45 FR 54051, Aug. 14, 1980; 45 FR 74480, Nov. 10, 1980; 47 FR 55396, Dec. 9, 1982; 59 FR 37688, July 25, 1994; 60 FR 33925, June 29, 1995]

§ 52.2523 Attainment dates for national standards.

The New Manchester and Grant Magisterial Districts in Hancock County are expected to attain and maintain the secondary sulfur dioxide (SO_2) standards as soon as the Sammis Power Plant meets the SO_2 limitations in the Ohio State Implementation Plan.

[61 FR 16063, Apr. 11, 1996]

§ 52.2524 Compliance schedules.

(a) The requirements of § 51.262(a) of this chapter are not met since compliance schedules with adequate increments of progress have not been submitted for every source for which they are required.

(b) Federal compliance schedules. (1) The owner or operator of any boiler or furnace of more than 250 million Btu per hour heat input subject to the emission limitation requirements of West Virginia Administrative Regulations, Chapter 16–20, Series X (hereinafter regulation X), section 3.01(a) or section 3.03(a), shall notify the Administrator, no later than October 1, 1973, of his intent to meet the requirements of said regulation by utilizing low-sulfur fuel, stack gas desulfurization, or a combination of stack gas desulfurization and low-sulfur fuel.

(2) Any owner or operator of a stationary source subject to paragraph (b)(1) of this section who elects to utilize low-sulfur fuel, either alone or in combination with stack gas desulfurization, shall be subject to the following compliance schedule:

(i) November 1, 1973—Submit to the Administrator a projection of the amount of fuel, by types, that will be substantially adequate to enable compliance with the applicable regulation on June 30, 1975, and for at least one year thereafter.

(ii) December 31, 1973—Sign contracts with fuel suppliers for fuel requirements as projected above.

(iii) January 31, 1974—Submit a statement as to whether boiler modifications will be required. If modifications will be required, submit plans for such modifications.

(iv) March 15, 1974—Let contracts for necessary boiler modifications, if applicable.

(v) May 15, 1974—Initiate onsite modifications, if applicable.

(vi) February 28, 1975—Complete onsite modifications, if applicable.

(vii) June 30, 1975—Final compliance with the requirements of regulation X, section 3.01(a) or section 3.03(a).

(3) Any owner or operator of a stationary source subject to paragraph (b)(1) of this section who elects to utilize stack gas desulfurization, either alone or in combination with low-sulfur fuel, and any owner or operator of a stationary source subject to the emission limitation requirements of regulation X, section 3.05, shall be subject to the following compliance schedule:

(i) October 15, 1973—Let necessary contracts for construction.

(ii) February 28, 1974—Initiate onsite construction.

(iii) February 28, 1975—Complete onsite construction.

(iv) June 30, 1975—Final compliance with the requirements of regulation X, section 3.01(a), section 3.03(a), or section 3.05.

(4) The owner or operator of any boiler or furnace of more than 250 million Btu per hour heat input subject to the emission limitation requirements of regulation X, section 3.01(b) or section 3.03(b) shall notify the Administrator, no later than July 31, 1975, of his intent to meet the requirements of said regulation by utilizing low-sulfur fuel, stack gas desulfurization, or a combination of stack gas desulfurization and low-sulfur fuel.

(5) Any owner or operator of a stationary source subject to paragraph (b)(4) of this section who elects to utilize low-sulfur fuel, either alone or in combination with stack gas desulfurization, shall be subject to the following compliance schedule:

(i) August 31, 1975—Submit to the Administrator a projection of the amount of fuel, by types, that will be substantially adequate to enable compliance with the applicable regulation on June 30, 1978, and for at least one year thereafter, as well as a statement as to whether boiler modifications will be required. Submit final plans for modifications if they will be required.

(ii) October 31, 1975—Sign contracts with fuel suppliers for fuel requirements as projected above.

(iii) December 31, 1975—Let contracts for necessary boiler modifications, if applicable.

(iv) April 30, 1976—Initiate onsite modifications, if applicable.

(v) April 30, 1977—Complete onsite modifications, if applicable.

(vi) June 30, 1978—Final compliance with the requirements of regulation X, section 3.01(b) or section 3.03(b).

(6) Any owner or operator of a stationary source subject to paragraph (b)(4) of this section who elects to utilize stack gas desulfurization, either alone or in combination with low-sulfur fuel, shall be subject to the following compliance schedule:

(i) October 30, 1975—Submit to the Administrator a final control plan, which describes at a minimum the steps which will be taken by the source to achieve compliance with the applicable regulations.

(ii) February 28, 1976—Let necessary contracts for construction.

(iii) August 31, 1976—Initiate onsite construction.

(iv) December 31, 1977—Complete onsite construction.

(v) June 30, 1978—Final compliance with the requirements of regulation X, section 3.01(b) or section 3.03(b).

(7) Any owner or operator subject to the compliance schedule in paragraph (b) (2), (3), (5) or (6) of this section shall certify to the Administrator within five days after the deadline for each increment of progress, whether or not the required increment of progress has been met.

(8) If a performance test is necessary for a determination as to whether compliance has been achieved, such a test must be completed by the final compliance date in the applicable regulation. Ten days prior to such a test, notice must be given to the Administrator to afford him the opportunity to have an observer present.

(9) (i) None of the above paragraphs shall apply to a source which is presently in compliance with applicable regulations and which has certified such compliance to the Administrator by October 1, 1973. The Administrator may request whatever supporting information he considers necessary for proper certification.

(ii) Any compliance schedule adopted by the State and approved by the Administrator shall satisfy the requirements of this paragraph for the affected source.

(iii) Any owner or operator subject to a compliance schedule in this paragraph may submit to the Administrator no later than October 1, 1973, a proposed alternative compliance schedule. No such compliance schedule may provide for final compliance after the final compliance date in the applicable compliance schedule of this paragraph. If promulgated by the Administrator, such schedule shall satisfy the requirements of this paragraph for the affected source.

(iv) The requirements of this paragraph shall not apply to the following sources for which a request for a postponement of the applicability of regulation X had been submitted pursuant to section 110(f) of the Act prior to the date of publication of this regulation:

Source	Location
Kammer Station, Ohio Power Company	Moundsville.
Mitchell Station, Ohio Power Company	Do.
Harrison Station, Monongahela Power Company.	Haywood.
Fort Martin Station, Monongahela Power Company.	Maidsville.

(10) Nothing in this paragraph shall preclude the Administrator from promulgating a separate schedule for any source to which the application of the compliance schedule in paragraph (b)(2), (3), (5), or (6) of this section fails to satisfy the requirements of §§ 51.261 and 51.262(a) of this chapter.

[38 FR 16170, June 20, 1973, as amended at 38 FR 22751, Aug. 23, 1973; 38 FR 24342, Sept. 7, 1973; 39 FR 32560, Sept. 9, 1974; 40 FR 3569, Jan. 23, 1975; 51 FR 40676, 40677, Nov. 7, 1986; 54 FR 25258, June 14, 1989]

§ 52.2525 Control strategy: Sulfur dioxide.

(a) The provisions of § 51.112(a) are not met because the State did not adequately demonstrate that the deletion of section 3.03(b) of West Virginia regulation X as it applies to the Rivesville plant would not interfere with attainment and maintenance of the national ambient air quality standard.

[43 FR 52240, Nov. 9, 1978, as amended at 51 FR 40676, Nov. 7, 1986]

§ 52.2526—52.2527 [Reserved]

§ 52.2528 Significant deterioration of air quality.

(a) The requirements of Sections 160 through 165 of the Clean Air Act are met since the plan includes approvable procedures for the Prevention of Significant Air Quality Deterioration.

(b) Regulations for Preventing Significant Deterioration of Air Quality, the provisions of § 52.21(p) (4), (5), (6), and (7) are hereby incorporated and made a part of the applicable state plan for the state of West Virginia.

[51 FR 12518, Apr. 11, 1986]

§§ 52.2529—52.2530 [Reserved]

§ 52.2531 1990 base year emission inventory.

EPA approves as a revision to the West Virginia State Implementation Plan the 1990 base year emission inventories for the Greenbrier county ozone nonattainment area submitted by the Secretary, West Virginia Department of Commerce, Labor & Environmental Resources on December 22, 1992. These submittals consist of the 1990 base year point, area, non-road mobile, biogenic and on-road mobile source emission inventories in Greenbrier County for the following pollutants: Volatile organic compounds (VOC), carbon monoxide (CO), and oxides of nitrogen (NO_X).

[60 FR 39862, Aug. 4, 1995]

§ 52.2532 [Reserved]

§ 52.2533 Visibility protection.

(a) The requirements of section 169A of the Clean Air Act are not met, because the plan does not include approvable procedures for protection of visibility in mandatory Class I Federal areas.

(b) Regulation for visibility monitoring and new source review. The provisions of §§ 52.26 and 52.28 are hereby incorporated and made a part of the applicable plan for the State of West Virginia.

(c) *Long-term strategy*. The provisions of § 52.29 are hereby incorporated and

made part of the applicable plan for the State of West Virginia.

[50 FR 28553, July 12, 1985, as amended at 52 FR 45137, Nov. 24, 1987]

§ 52.2534 Stack height review.

The State of West Virginia has declared to the satisfaction of EPA that no State Implementation Plan emission limits, other than those for the Kammer power plant, have been affected by stack height credits greater than good engineering practice or any other prohibited dispersion technique as defined in EPA's stack height regulations, as revised on July 8, 1985. This declaration was submitted to EPA on September 16, 1988.

[55 FR 21752, May 29, 1990]

§ 52.2560 Small business technical and environmental compliance assistance program.

On January 13, 1993, the Secretary of the West Virginia Department of Commerce, Labor and Environmental Resources submitted a plan for the establishment and implementation of a Small Business Technical and Environmental Compliance Assistance Program as a state implementation plan revision (SIP), as required by title V of the Clean Air Act. EPA approved the Small Business Technical and Environmental Compliance Assistance Program on September 15, 1993, and made it part of the West Virginia SIP. As with all components of the SIP, West Virginia must implement the program as submitted and approved by EPA.

[58 FR 48312, Sept. 15, 1993]

Subpart YY—Wisconsin

§ 52.2569 Identification of plan-conditional approval.

(a) Revisions to the plan identified in § 52.2570 were submitted on the date specified.

(1)–(3) (Reserved)

(4) On November 15, 1993, and July 28, 1994, the Wisconsin Department of Natural Resources (WDNR) submitted enhanced inspection and maintenance (I/M) rules and a Request for Proposal (RFP) as a revision to the State's ozone State Implementation Plan (SIP). The EPA conditionally approved these rules and RFP based on the State's commitment to amend its rules and sign its final I/M contract to address deficiencies noted in to the final conditional approval. These final, adopted rule amendments and final, signed contract must be submitted to the EPA within one year of the EPA's conditional approval.

(i) Incorporation by reference.

(A) Wisconsin Administrative Code, Chapter NR 485, effective July 1, 1993.

(ii) Additional materials.

(A) SIP narrative plan titled ''Wisconsin—Ozone SIP—Supplement to 1992 Inspection and Maintenance Program Submittal,'' submitted to the EPA on November 15, 1993.

(B) RFP, submitted along with the SIP narrative on November 15, 1993.

(C) Supplemental materials, submitted on July 28, 1994, in a letter to the EPA.

[60 FR 2885, Jan. 12, 1995]

§ 52.2570 Identification of plan.

(a) Title of plan: ''A Statewide Implementation Plan to Achieve Air Quality Standards for Particulates, Sulfur Oxides, Nitrogen Oxides, Hydrocarbons, Oxidants, and Carbon Monoxide in the State of Wisconsin.''

(b) The plan was officially submitted on January 14, 1972.

(c) The plan revisions listed below were submitted on the dates specified.

(1) An abatement order for the Alma Power Plant in the Southeast LaCrosse AQCR was issued on February 15, 1972, by the State Department of Natural Resources. (Non-regulatory)

(2) On March 3, 1972, the control strategy (IPP) for the Southeast Wisconsin Interstate was submitted by the State Department of Natural Resources. (Non-regulatory)

(3) The air quality monitoring network was submitted by the State Department of Natural Resources on March 16, 1972. (Non-regulatory)

(4) Revisions to the air quality monitoring network were submitted on April 7, 1972, by the State Department of Natural Resources. (Non-regulatory)

(5) A revised order, hearing documents and other information concerning the meeting of standards by the Alma Power Plant was submitted on

January 19, 1973, by the Governor. Also submitted were revisions to emergency episode levels regulation NR 154.01(41)(c)–3 and NR 154.01(41)(c)–4.

(6) Compliance schedules were submitted on June 26, 1973, by the State.

(7) Compliance schedules were submitted on October 11, 1973, by the State.

(8) Compliance schedules were submitted on October 19, 1973, by the State.

(9) Compliance schedules were submitted on November 10, 1973, by the State.

(10) Compliance schedules were submitted on December 12, 1973, by the State.

(11) The Governor of the State submitted the Air Quality Maintenance Areas designations on June 21, 1974.

(12) A request for an extension of the statutory timetable for the submittal of the portion of the Wisconsin SIP which provides for the attainment of the Secondary NAAQS for TSP was submitted by the Wisconsin DNR on February 22, 1979, and was supplemented with additional information on April 16, 1979 and May 13, 1980.

(13) On June 4, 1979, the State submitted revisions to regulation NR 154.13 and to regulation NR 154.01 as it applies to regulation NR 154.13 and a commitment by the Wisconsin Natural Resources Board to adopt any additional rules representing reasonably available control technology which are necessary for the attainment of the ozone standard. NR 154.01 and NR 154.13 were published in the Wisconsin Administrative Register in July 1979 and were amended in the August 1979 Register.

(14) On November 27, 1979 the Wisconsin Department of Natural Resources submitted revised rules NR 154.01 (126m), 154.02, 154.03 and 154.06. Support materials for these regulations were previously submitted on July 12, 1979 and September 4, 1979.

(15) On May 1, 1980, the Wisconsin Department of Natural Resources submitted the sulfur dioxide regulations NR 154.12 (4) and (5) for the Village of Brokaw, Marathon County and the City of Madison, Dane County.

(16) On July 12, 1979, Wisconsin submitted its ozone and carbon monoxide plan. This included the plan for the Green Bay, Madison, and Milwaukee urban areas which include the ozone nonattainment counties of Brown, Dane, Kenosha, Milwaukee, Ozaukee, Racine and Waukesha. Supplemental materials and commitments were submitted on September 4, 1979, February 28, 1980, August 12, 1980, September 25, 1980, November 4, 1980 and April 9, 1981.

(17) On July 12, 1979, Wisconsin submitted its vehicle inspection and maintenance program. Supplemental information and commitments were submitted on August 1, 1979, October 16, 1979, May 7, 1980, May 8, 1980, and April 9, 1981.

(18) On July 12, 1979 Wisconsin submitted its new source review regulations. Additional information was submitted on September 4, 1979, November 27, 1979, May 1, 1980, and February 18, 1981. EPA is only approving these submittals as they relate to the new source review plan for nonattainment areas.

(19) On April 18, 1980, the State of Wisconsin submitted a revision to provide for modification of the existing air quality surveillance network. An amendment to the revision was submitted by the State of Wisconsin on September 15, 1980.

(20) On September 9, 1980, the State of Wisconsin submitted a variance to regulation NR 154.13(3)(c) for Avis Rent-A-Car.

(21) On October 29, 1980 the State submitted a variance to regulation NR 154.13(3)(a) for Union Oil Company bulk gasoline terminal in Superior.

(22) On July 12, 1979, the State submitted revisions to Regulation NR 154.09, Wisconsin Administrative Code.

(23) Revision to plan allowing General Motors Assembly Division Janesville plant variance from Regulation NR 154.13(4)(g) 4.a., Wisconsin Administrative Code submitted January 15, 1981 by the State Department of Natural Resources.

(24) On August 31, 1981, Wisconsin submitted a variance from the provisions of Section NR 154.12(5)(a)2.b.2, and NR 154.12(5)(b) Wisconsin Administrative Code, for the Oscar Mayer and Company plant located in Madison, Wisconsin as a revision to the Wisconsin sulfur dioxide SIP.

(25) Revision to plan allowing W. H. Brady Company in Milwaukee variance from regulation NR 154.13(4) (e) and (f), Wisconsin Administrative Code, submitted January 22, 1982, by the State Department of Natural Resources.

(26) Revision to plan allowing Albany Carbide Corporation in Albany variance from regulation NR 154.13(5)(a), Wisconsin Administrative Code, submitted on December 22, 1981, by the State Department of Natural Resources.

(27) On January 15, 1981, the Wisconsin Department of Natural Resources submitted revisions to regulations NR 154.01 and NR 154.13 representing reasonably available control technology which are necessary to attain and maintain the ozone standard. A supplemental commitment was submitted March 31, 1982.

(28) On November 27, 1979, the State of Wisconsin submitted implementation plan revision to satisfy the Part D, Title I of the Clean Air Act for attainment and maintenance of the national ambient air quality standards for particulate matter. The revision consists of NR 154.11, Wisconsin Administrative Code, Control of Particulate Matter. Amendments to the plan were submitted by the State on November 6, 1980, and June 10, 1981. Supplemental information and commitments were submitted on May 1, 1980, May 13, 1982, and December 7, 1982. No attainment plan was submitted for Columbia, Brown, Dane, Douglas, Kenosha, Manitowoc, Marathon, Racine, Winnebago, and Wood Counties.

(29) On July 15, 1982, the State of Wisconsin submitted a variance to the compliance regulation requirements contained in NR 154.13(2)(a)1.d. for Lakehead Pipe Line Company, Inc., in Superior.

(30) On December 7, 1982, Wisconsin submitted revisions to regulations NR 154.01 and NR 154.11(2) for fugitive dust control in or near nonattainment areas for TSP.

(31) On March 8, 1983, the Wisconsin Department of Natural Resources submitted the 1982 revision to the Ozone/Carbon Monoxide SIP for Southeastern Wisconsin. This revision pertains to Kenosha, Milwaukee, Ozaukee, Racine, Walworth, Washington, and Waukesha Counties. EPA is deferring action on the vehicle inspection and maintenance (I/M) portion of this revision.

(32) On February 17, 1983, the Wisconsin Department of Natural Resources submitted the newly created section NR 154.13(13)(e) of Wisconsin's Administrative Code which partially exempts methylene chloride (dichloromethane) and methyl chloroform (1,1,1-trichloroethane) from the VOC control requirements contained in the Wisconsin SIP. The U.S. Environmental Protection Agency is not rulemaking at this time on the sulfur dioxide control requirements for the City of Brokaw in Marathon County which were also contained in the February 17, 1983, submittal.

(33) On January 23, 1984, the State of Wisconsin submitted a State Implementation Plan revision revoking the Hydrocarbon Standard contained in NR 155.03(5).

(34) On July 1, 1983, the State of Wisconsin submitted ambient lead standards and lead emission limitations as additions to the State Implementation Plan. The additions consist of NR 155.03(7), Lead: Primary and Secondary Standards, and NR 154.145, Control of Lead Emissions, of the Wisconsin Administrative Code. Supplemental information and commitments were submitted on October 13, 1983, March 14, 1984, June 4, 1984, and June 15, 1984.

(35) On September 20, 1983, the Wisconsin Department of Natural Resources submitted its Lead SIP for the entire State of Wisconsin. Additional information was submitted on February 14, 1984, and March 14, 1984.

(36) On December 8, 1983, the Wisconsin Department of Transportation submitted Chapter TRANS 131, Motor Vehicle Inspection and Maintenance Program (MVIP). On June 11, 1984, the Wisconsin Department of Natural Resources requested that USEPA approve the remaining element of the 1982 Ozone/Carbon Monoxide SIP, the vehicle inspection and maintenance portion (I–M). All other elements of the Ozone/Carbon Monoxide SIP has been approved previously. (See Section 52.2570 (c)(31)).

(37) On May 25, 1984, the Wisconsin Department of Natural Resources submitted a permit fee rule, Chapter NR

410, which establishes air permit application fees and air permit implementation and enforcement fees, as a revision to the SIP.

(38) On January 23, 1984, the Wisconsin Department of Natural Resources (WDNR) submitted SO_2 emission limits for large electric utility sources located in the City of Milwaukee, Milwaukee County, Wisconsin.

WDNR recodified the rule and on October 23, 1987, submitted it as recodified.

(i) Incorporation by reference.

(A) Wisconsin Administrative Code, Natural Resources (NR) 418.04 as found at (Wisconsin) Register, September 1986, No. 369, effective October 1, 1986.

(39) On January 23, 1984, the Wisconsin Department of Natural Resources submitted revisions to sections NR 154.01 and NR 154.13 of the Wisconsin Administrative Code. These revisions incorporate volatile organic compound emission limits for large existing petroleum dry cleaners located in a six-county area of southeastern Wisconsin into the Wisconsin Ozone SIP [NR 154.13(6)(c)].

(40) On November 17, 1983, Wisconsin submitted revisions to Sections NR 154.01, Definitions, and NR 154.13, Control of Organic Compound Emissions, of the Wisconsin Administrative Code. These revisions clarify the volatile organic compound RACT rules and establish an extended RACT compliance date for certain can coating operations. On July 11, 1984, Wisconsin submitted additional information revising the original submittal.

(i) Incorporation by reference.

(A) Board Order A–36–82, incorporating revisions to NR 154.01 and NR 154.13 of the Wisconsin Administrative Code, became effective in the State of Wisconsin on August 1, 1983.

(41) On January 24, 1985, the Wisconsin Department of Natural Resources submitted test methods for petroleum dry cleaning sources as a revision to the Wisconsin SIP. These test methods are part of the State's ''Air Management Operations Handbook''.

(i) Incorporation by reference.

(A) Test methods for petroleum dry cleaning sources contained in the Wisconsin Department of Natural Resources' ''Air Management Operations Handbook''.

(42) On July 12, 1979, the State of Wisconsin submitted its new source review (NSR) regulations. Additional information was submitted on September 4, 1979, November 27, 1979, May 1, 1980, and February 18, 1981. USEPA has previously approved these submittals as they relate to the NSR plan for nonattainment areas. See (c) (18). USEPA is now approving these submittals as they relate to the general NSR requirements for attainment and unclassified areas. USEPA is not approving these submittals with regard to the Prevention of Significant Deterioration (PSD) requirements, and USEPA's approval of Wisconsin's NSR rules should not be interpreted to apply to PSD. USEPA is approving §§ 144.394(2) and 144.394(5) of the State Statutes provided that all variances (144.394(2)) and emission reduction options (144.394(5)) are submitted to USEPA as SIP revisions. On November 6, 1985, the State submitted a letter committing to: (1) Revise its regulations to conform with USEPA's July 8, 1985, rulemaking concerning stack height credits for air quality modeling; and (2) implement all air quality modeling analyses to conform with the July 8, 1985, rulemaking until the revised State regulations are enacted.

(i) Incorporation by reference. (A) The following Sections of Chapter 144 of the Wisconsin Statutes, entitled ''Water, Sewage, Refuse, Mining, and Air Pollution, are incorporated by reference. These sections are located in Subchapter I, ''Definitions'', Subchapter III, ''Air Pollution'', and Subchapter VII, ''General Provisions, Enforcement and Penalties'', of Chapter 144.

Section 144.01 (1), (2), (3), (9m), and (12)—Definitions
Section 144.30—Air Pollution; Definitions
Section 144.31—Air Pollution Control; Powers and Duties
Section 144.34—Inspections
Section 144.375—Air Pollution Control; Standards and Determinations
Section 144.38—Classification and Reporting
Section 144.391—Air Pollution Control Permits
Section 144.392—Permit Application and Review
Section 144.393—Criteria for Permit Approval

Section 144.394—Permit Conditions
Section 144.395—Alteration, Suspension and Revocation of Permits
Section 144.396—Permit Duration
Section 144.397—Operation Permit Review
Section 144.398—Failure to Adopt Rules or Issue Permit or Exemption
Section 144.399—Fees
Section 144.402—Petition for Alteration
Section 144.403—Hearings on Certain Air Pollution Actions
Section 144.423—Violations; Enforcement
Section 144.426—Penalties for Violations Relating to Air Pollution
Section 144.98—Enforcement; Duty of Department of Justice

(B) The following Sections of Chapter NR 154 of the Wisconsin Administrative Code, entitled ''Air Pollution Control'', are incorporated by reference.

Section 154.01—Definitions
Section 154.04—Permit Requirements and Exemptions
Section 154.05—Action on Applications
Section 154.055—Relocation of Portable Sources
Section 154.06—Operation and Inspection of Sources (Source Reporting, Recordkeeping, Testing, Inspection and Operation)
Section 154.08—Enforcement and Penalties
Section 154.21—Limitations on County, Regional, or Local Regulations
Section 154.24—Procedures for Non-contested Case Public Hearings
Section 154.25—Procedures for Alteration of Permits by Petition

(C) Letter from the State of Wisconsin dated November 6, 1985, committing to implement USEPA's stack height regulations.

(43) On October 13, 1983, the State of Wisconsin submitted revisions to Chapter NR 154 of the Wisconsin Administrative Code that exempt certain sources from the need to obtain construction, modification, and operation permits, and from other permit program requirements. USEPA is approving these permit exemptions for attainment, nonattainment, and unclassified areas, except for those exemptions upon which USEPA is deferring action (Sections NR 154.01(118), NR 154.04(3)(a), NR 154.04(5), and NR 154.04(6)(b)).

(i) Incorporation by reference.

(A) Sections NR 154.01, NR 154.04, NR 154.08, NR 154.24, and NR 154.25 of Natural Resources Board Order Number A–39–81, which were published in the Wisconsin Administrative Register in April 1983, and which took effect on May 1, 1983, with the exception of sections NR 154.01(118), NR 154.04(3)(a), NR 154.04(5), and NR 154.04(6)(b).

(ii) Additional material.

(A) Letter from the State dated May 24, 1984, clarifying that major sources, or major modifications of major sources, could not be exempted from the requirement to obtain a permit under sections NR 154.04(2)(a) or NR 154.04(3)(b).

(B) Letter from the State dated July 13, 1984, stating that decisions made pursuant to NR 154.25 would be subject to the permitting criteria in § 144.393 of the Wisconsin Statutes.

(44) On August 20, 1985, Wisconsin submitted a revision to its volatile organic compound plan for the Continental Can Company. The revision allows the use of internal offsets, in conjunction with daily weighted emission limits, at Continental Can's Milwaukee and Racine can manufacturing facilities.

(i) Incorporation by reference.

(A) NR 422.05, as published in the (Wisconsin) Register, September, 1986, number 369, effective October 1, 1986.

(45) Submittal from the State of Wisconsin, dated February 17, 1983, modifying the SO_2 emission limits applicable in the Village of Brokaw, Marathon County, Wisconsin.

(i) Incorporation by reference.

(A) Letter from the Wisconsin Department of Natural Resources, dated February 17, 1983, and revised SO_2 emission limits for the Village of Brokaw, Marathon County, Wisconsin, which are contained in section NR 154.12(4) of the Wisconsin Administrative Code. The revisions consist of limiting the maximum sulfur content in fuel oil burned in boilers to 1.0 percent by weight, where a stack of 160 feet or more is used; limiting process emissions from the Copeland recovery system, pulp papermill cooking acid plant, and pulp digester blow stack to a combined total of 228 pounds of SO_2 per hour, when vented to a common stack of 160 feet of more. If a stack height of less than 160 feet is used, or if the process emissions are not vented to acommon stack of 160 feet or more, then the emission limits approved by USEPA on April 9, 1981, must be met.

See (c)(15). The emission limits were effective January 1, 1983.

(46) The State of Wisconsin submitted negative declarations for several volatile organic compound source categories, as follows:

November 7, 1984—Synthetic organic chemical manufacturing industry sources (SOCMI) leaks and oxidation;

September 19, 1984—High-density polyethylene, polypropylene, and polystyrene resin manufacturers;

June 6, 1986—Natural gas/gasoline processing plants leaks.

(i) Incorporation by reference.

(A) Letters dated November 7, 1984, September 19, 1984, and June 6, 1985, from Donald F. Theiler, Director, Bureau of Air Management, Wisconsin Department of Natural Resources.

(ii) Additional information.

(A) Letter dated January 24, 1986, from PPG Industries, Inc., stating that they do not produce as an intermediate or final product any of the chemicals listed in 40 CFR part 60, subpart VV, § 60.489(a).

(47) Submittal from the State of Wisconsin, dated December 19, 1985, revising the specified levels for air pollution episodes, air pollution episode reporting requirements, and the requirements for implementing air pollution control plans.

(i) Incorporation by reference.

(A) Department of Natural Resources, Chapter NR 493, Air Pollution Episode Levels and Episode Emissions Control Action Programs, NR 493.01, 493.02 and 493.03, effective on August 1, 1985.

(48) On April 7, 1986, the WDNR submitted a site-specific revision to its ozone SIP for VOC emissions from Union Camp's four flexographic printing presses at the Tomah facility, located in Monroe County, Wisconsin. It consists of a compliance date extension from December 31, 1985, to December 31, 1987, for meeting the VOC emission limits contained in Wisconsin SHIP regulation, NR 154.13(4)(1).

(i) Incorporation by reference.

(A) January 8, 1986, RACT Variance Review for Union Camp Corporation 501 Williams Street, Tomah, Wisconsin 54660.

(49) Submittal from the State of Wisconsin, dated June 14, 1985, revising the Wisconsin Administrative Code to include section NR 154.015, Department Review Times.

(i) Incorporation by reference.

(A) Letter from the Wisconsin Department of Natural Resources, dated June 14, 1985, and section NR 154.015 of the Wisconsin Administrative Code as a revision to the Wisconsin SIP, effective on May 1, 1985. Section NR 154.015 is entitled ''Department Review Times'', and it establishes time limits for review and action by the Wisconsin Department of Natural Resources on three types of air permit applications.

(50) On November 20, 1986, the State of Wisconsin submitted a revision to the Vehicle Inspection and Maintenance program (I/M) portion of its ozone/CO SIP. This was a revised rule Table 1 for NR 485.04, Wisconsin Administrative Code, plus State SIP Revision Certification.

(i) Incorporation by reference.

(A) Wisconsin revised rule NR 485.04, Wisconsin Administrative Code, effective November 1, 1986.

(51) [Reserved]

(52) On December 1, 1987, the Wisconsin Department of Natural Resources (WDNR) submitted NR 418.06. NR 418.06 is an SO_2 rule which is only applicable to the Badger Paper Mills facility, located in the City of Peshtigo, Marinette County, Wisconsin.

(i) Incorporation by reference. (A) Natural Resources (NR) 418.06, Peshtigo RACT sulfur limitations, as published in the (Wisconsin) Register, October 1987, No. 382 at page 74, effective November 1, 1987.

(53)–(54) [Reserved]

(55) On January 28, 1985, Wisconsin submitted its Rothschild (Marathon County) SO_2 plan, which contains emission limits for sources in the City of Rothschild and the Town of Weston, specifically for the Weyerhaeuser Paper Company and the Reed-Lignin Company, respectively. USEPA is approving NR 418.08 because this revision meets the requirements of part D of the Clean Air Act, 42 U.S.C. 7501–7508. The Wisconsin SIP, however, contains additional existing requirements for SO_2. Today's action on NR 418.08 has been integrated within Wisconsin's existing SIP regulations, and does not

eliminate a source's obligation to comply with all existing SO_2 SIP requirements. Specifically, today's action in no way affects the terms and conditions of a Federal Consent Decree entered into by USEPA and the Weyerhaeuser Company located in Rothschild, Wisconsin No. 89–C–0973–C (W.D. Wis., filed November 1, 1989). This Consent Decree resolves USEPA's enforcement action against Weyerhaeuser Company for violations of SIP rule NR 154.12(1) (now recodified as 418.08). In that Decree, Weyerhaeuser committed to comply with NR 154.12(1) by installing a desulfurization scrubber. August 15, 1989, the WDNR issued a construction permit to Weyerhaeuser which limit the combined emissions of Weyerhaeuser's acid plant and desulfurization scrubber to 28 pounds of SO_2 per hour. The conditions and terms of this construction permit and of the Consent Decree remain federally enforceable. On May 9, 1987, 18 months past the effective date of USEPA's designation of Marathon County as a primary SO_2 non-attainment area (October 9, 1985, (50 FR 41139)), a construction moratorium was imposed in Marathon County under section 110(a)(2)(I) of the Clean Air Act because the county did not have a USEPA approved plan which assured the attainment and maintenance of the SO_2 NAAQS. However, USEPA final approval of Rothschild's SO_2 SIP will lift the section 110(a)(2)(I) construction ban in Marathon County.

(i) Incorporation by reference.

(A) Wisconsin Administrative Code, Natural Resources 418.08, Rothschild RACT sulfur limitations, as published in the (Wisconsin) Register, September, 1986, number 369, effective October 1, 1986.

(ii) Additional information.

(A) Weyerhaeuser Company, Federal Consent Decree No. 89–C–0973–C (W.D. Wis., filed November 1, 1989).

(56) [Reserved]

(57) On January 13, 1987, WDNR submitted a temporary variance from NR 154.13(4)(g) and interim emission limits for VOC emissions from General Motors Corporation's topcoat and final repair lines at Janesville, Wisconsin, which expire on December 31, 1992.

(i) Incorporation by reference. (A) January 12, 1987, letter to Mike Cubbin, Plant Manager, General Motors Corporation from L.F. Wible, P.E., Administrator, Division of Environmental Standards.

(58) [Reserved]

(59) On November 6, 1986, WDNR submitted a variance from NR 422.15(2)(b), subject to certain conditions, for the VOC emissions from Gehl Company's dip tank coating operation in West Bend, Wisconsin. On May 22, 1990, WDNR added four additional conditions to the revised plan, and on September 5, 1990, it submitted clarifications to the plan.

(i) Incorporation by reference. (A) A November 6, 1986, letter from Lyman Wible, P.E., Administrator, Division of Environmental Standards, WDNR to Mr. Michael J. Mulcahy, Vice-President, Secretary and General Counsel, Gehl Company.

(B) A May 10, 1990, letter from Lyman Wible, P.E., Administrator, Division of Environmental Standards, WDNR to Mr. Michael J. Mulcahy, Vice-President, Secretary and General Counsel, Gehl Company.

(ii) Additional information. (A) A September 5, 1990, letter from Thomas F. Steidl, Attorney, WDNR to Louise C. Gross, Associated Regional Counsel, USEPA.

(60) On January 23, 1984, and May 21, 1987, the WDNR submitted a proposed revision and additional information to the SO_2 SIP for sources located in the cities of Green Bay and DePere, Wisconsin (Brown County).

(i) *Incorporation by reference.* (A) Natural Resources 418.05, Green Bay and DePere RACT sulfur limitations, as published in the (Wisconsin) Register, September, 1990, No. 417 at page 96, effective October 1, 1986.

(ii) *Additional information.* (A) A July 16, 1990, letter from Don Theiler, Director Bureau of Air Management, WDNR additional information responding to USEPA's comments on the variable emission limits for Proctor & Gamble-Fox River, James River Corporation, and Green Bay Packaging.

(B) An August 27, 1986, letter from Vicki Rudell, Air Management Engineer, WDNR to Mr. Bill Zabor, Proctor & Gamble, Fox River Mill, regarding

averaging time to be used when determining SO_2 emission limit exceedances and the concept of bubbling SO_2 emission limit from the digester blow stack scrubber and brown stock washer stack.

(C) A July 13, 1990, letter from W.F. Zabor, Environmental Control Manager, Proctor & Gamble to WDNR regarding the shut down of the bark combustor.

(D) A June 12, 1990, letter from Scott E. Valitchka, Environmental Control Engineer, James River Corporation, regarding how it intends to determine compliance with its boiler SO_2 emissions.

(E) A July 9, 1990, letter from Brian F. Duffy, Corporate Environmental Director Mills Operations to WDNR regarding SO_2 emission limits and compliance demonstration.

(F) A January 21, 1987, memorandum from Sudhir V. Desai, Environmental Engineer Central District Office, USEPA to Rashidan Khan, Engineering Section, USEPA, entitled ''Overview Inspection Green Bay Packaging Inc., Mill Division Green Bay, Wisconsin 54307, State FID #405032100 (A21055)''.

(61) [Reserved]

(62) On December 11, 1991, the United States Environmental Protection Agency received a revision to Wisconsin's State Implementation Plan for Carbon Monoxide. This revision took the form of Administrative Order AM–91–71, dated November 22, 1991, which incorporates a stipulation between the Wisconsin Department of Natural Resources and the Brunswick Corporation d.b.a. Mercury Marine. The Administrative Order addresses the emissions of carbon monoxide into the ambient air from Mercury Marine Engine Testing Facility in Oshkosh, Wisconsin.

(i) Incorporation by reference.

Administrative Order AM–91–71, dated November 22, 1991, which incorporates a stipulation between the Wisconsin Department of Natural Resources and the Brunswick Corporation d.b.a. Mercury Marine.

(ii) Additional materials.

Attainment modeling demonstration of control strategy to limit carbon monoxide emissions from Mercury Marine Engine Testing Facility, dated December 20, 1989.

(63) Revisions to the sulfur dioxide attainment plan were submitted by the State of Wisconsin between June 5, 1985, and January 27, 1992. The revised plan consists of: Natural Resources 417.07, Natural Resources 417.04, several operating permits, numerous administrative rules, numerous negative declarations, and some compliance plans.

(i) Incorporation by reference.

(A) Wisconsin Administrative Code, Natural Resources (NR) 417.07, Statewide Sulfur Dioxide Emission Limitations: Subsections 1 (Applicability); 2a, 2b, 2c, 2d, 2g (Emission Limits for Existing Sources); 3 (Emission Limits for New Sources); 4 (More Restrictive Emission Limits); 5 (Alternate Emission Limits); 6 (Compliance Schedules); 7 (Compliance Determinations); 8 (Variance from Emission Limits); as published in the (Wisconsin) Register, September, 1990, Number 417 at page 86, effective October 1, 1986.

(B) Wisconsin Administrative Code, NR 417.04, Southeastern Wisconsin Intrastate AQCR, as published in the (Wisconsin) Register, September, 1990, Number 417 at page 85, effective October 1, 1986.

(C) An Air Pollution Control Permit (MIA–10–DFS–82–36–101), dated and effective December 22, 1982, issued by the Wisconsin Department of Natural Resources to The Manitowoc Company, Inc., limiting the emissions and operation of Boiler #23 at the facility in Manitowoc, Manitowoc County, Wisconsin.

(D) An Air Pollution Control Permit (EOP–10–DFS–82–36–102), dated and effective January 12, 1983, and amended on August 7, 1987, issued by the Wisconsin Department of Natural Resources to the Manitowoc Company, Inc., limiting the emissions and operation of Boilers #20, 21, and 22 at the facility in Manitowoc, Manitowoc County, Wisconsin.

(E) An Administrative Order (86–436041870–J01), dated and effective November 25, 1986, issued by the Wisconsin Department of Natural Resources to the Manitowoc Company, Inc., South Works Facility, limiting the emissions and operation of Boilers #20 and 21 at the facility in Manitowoc, Manitowoc County, Wisconsin.

(F) An Administrative Order (86–445038550–J01), dated and effective October 27, 1986, issued by the Wisconsin Department of Natural Resources to Appleton Papers, Inc., limiting the emissions and operation of Boiler #22 at the facility in Appleton, Outagamie County, Wisconsin.

(G) A letter from Andrew Stewart to Dennis Hultgren, dated and effective on October 9, 1986, that details the conditions of the compliance plan for Appleton Papers at the facility in Appleton, Outagamie County, Wisconsin.

(H) An Administrative Order (86–445039100–J01), dated and effective December 23, 1986, issued by the Wisconsin Department of Natural Resources to the Fox River Paper Company, limiting the emissions and operation of Boiler #21 at the facility in Appleton, Outagamie County, Wisconsin.

(I) An Administrative Order (87–445009950–N01), dated and effective May 7, 1987, issued by the Wisconsin Department of Natural Resources to the Sanger B. Powers Correctional Center, limiting the emissions and operation of Boilers #1 and 2 at the facility in Oneida, Outagamie County, Wisconsin.

(J) An Air Pollution Control Permit (86–SJK–072), dated and effective July 28, 1987, issued by the Wisconsin Department of Natural Resources to the Thilmany Pulp and Paper Company, limiting the emissions and operation of Boilers #07, 08, 09, 10, and 11 at the facility in Kaukauna, Outagamie County, Wisconsin.

(K) An Administrative Order (87–469034390–J01), dated and effective January 22, 1987, issued by the Wisconsin Department of Natural Resources to the FWD Corporation, limiting the emissions and operation of Boilers #21, 22, and 23 at the facility in Clintonville, Waupaca County, Wisconsin.

(L) An Administrative Order (86–471030560–J01), dated and effective October 29, 1986, issued by the Wisconsin Department of Natural Resources to the Gilbert Paper Company, limiting the emissions and operation of Boilers #22, 23, 24, and 25 at the facility in Menasha, Winnebago County, Wisconsin.

(M) An Administrative Order (86–471031000–J01), dated and effective November 25, 1986, issued by the Wisconsin Department of Natural Resources to Kimberly Clark-Neenah Paper and Badger Globe Division, limiting the emissions and operation of Boilers #21 and 22 at the facility in Neenah, Winnebago County, Wisconsin.

(N) An Administrative Order (86–471031220–J01), dated and effective October 27, 1986, issued by the Wisconsin Department of Natural Resources to the U.S. Paper Mills Corporation-Menasha Mill Division, limiting the emissions and operation of Boiler #21 at the facility in Menasha, Winnebago County, Wisconsin.

(O) A Mandatory Operating Permit (735008010–J01), dated and effective June 16, 1987, issued by the Wisconsin Department of Natural Resources to Owens-Illinois Tomahawk and Timber STS, Inc., limiting the emissions and operation of Boilers #24, 25, 27, 28, and 29 at the facility in Tomahawk, Lincoln County, Wisconsin.

(P) An Administrative Order (86–750011350–J01), dated and effective September 16, 1986, issued by the Wisconsin Department of Natural Resources to the Del Monte Corporation, limiting the emissions and operation of Boilers #01 and 02 at the facility in Plover, Portage County, Wisconsin.

(Q) An Air Pollution Control Permit (85–RV–013), dated and effective July 17, 1985, issued by the Wisconsin Department of Natural Resources to the Neenah Paper Company, limiting the emissions and operation of Boiler #01 at the facility in Stevens Point, Portage County, Wisconsin.

(R) An Elective Operating Permit (87–NEB–701), dated and effective December 23, 1987, issued by the Wisconsin Department of Natural Resources to Nekoosa Papers, Incorporated-Port Edwards Mill, Inc., limiting the emissions and operation of Boilers #20, 21, 24, and 25; as well as the sulfite recovery furnace at the facility in Port Edwards, Wood County, Wisconsin.

(S) An Air Pollution Control Permit (603007790–N01), dated and effective June 12, 1987, issued by the Wisconsin Department of Natural Resources to the Seneca Foods Corporation, limiting the emissions and operation of Boilers #10 and 11 at the facility in Cumberland, Barron County, Wisconsin.

(T) An Air Pollution Control Permit (MIA–10–KJC–83–16–044), dated and effective July 7, 1983, issued by the Wisconsin Department of Natural Resources to the Koppers Company, limiting the emissions and operation of Boiler #1 at the facility in Superior, Douglas County, Wisconsin.

(U) An Administrative Order (86–649028490–N01), dated and effective September 30, 1986, issued by the Wisconsin Department of Natural Resources to the Wisconsin Dairies Cooperative, limiting the emissions and operation of Boilers #20, 21, and 22 at the facility in Clayton, Polk County, Wisconsin.

(V) An Administrative Order (86–851009940–J01), dated and effective September 30, 1986, issued by the Wisconsin Department of Natural Resources to Lionite Hardboard, limiting the emissions and operation of Boiler #20 at the facility in Phillips, Price County, Wisconsin.

(W) An Administrative Order (86–230008570–N01), dated and effective September 29, 1986, issued by the Wisconsin Department of Natural Resources to the University of Wisconsin-Parkside Heating Plant, limiting the emissions and operation of Boilers #20, 21, 22, and 23 at the facility in Kenosha, Kenosha County, Wisconsin.

(X) An Administrative Order (86–241012970–J01), dated and effective September 29, 1986, issued by the Wisconsin Department of Natural Resources to the A.O. Smith/Automotive Products Company, limiting the emissions and operation of the fuel burning equipment at the facility in Milwaukee, Milwaukee County, Wisconsin.

(Y) An Administrative Order (86–241014730–J01), dated and effective September 30, 1986, issued by the Wisconsin Department of Natural Resources to the American Can Company, limiting the emissions and operation of Boilers #20, 21, and 22 at the facility in Milwaukee, Milwaukee County, Wisconsin.

(Z) An Administrative Order (87–241007360–J01), dated and effective October 28, 1987, issued by the Wisconsin Department of Natural Resources to the American Motors Corporation, Milwaukee Manufacturing Plant, limiting the emissions and operation of Boilers #20, 21, 22, 23, and 24 at the facility in Milwaukee, Milwaukee County, Wisconsin.

(AA) An Administrative Order (86–241016710–J01), dated and effective September 29, 1986, issued by the Wisconsin Department of Natural Resources to the Eaton Corporation/Specific Industry Control Division, limiting the emissions and operation of Boilers #20, 21, 22, at the facility in Milwaukee, Milwaukee County, Wisconsin.

(BB) An Administrative Order (86–241027050–J01), dated and effective September 18, 1986, issued by the Wisconsin Department of Natural Resources to the Milwaukee County Department of Health and Human Services, limiting the emissions and operation of Boilers #20, 21, 22, and 23, at the facility in Milwaukee, Milwaukee County, Wisconsin.

(CC) An Administrative Order (86–241084690–J01), dated and effective September 30, 1986, issued by the Wisconsin Department of Natural Resources to OMC Evinrude, limiting the emissions and operation of Boilers #20, 21, and 22, at the facility in Milwaukee, Milwaukee County, Wisconsin.

(DD) A letter from Bill Haas to Steve Otto, dated and effective on September 24, 1986, that details the conditions of the compliance plan for OMC-Evinrude at the facility in Milwaukee, Milwaukee County, Wisconsin.

(EE) An Administrative Order (86–241009670–N01), dated and effective September 30, 1986, issued by the Wisconsin Department of Natural Resources to Patrick Cudahy, Incorporated, limiting the emissions and operation of Boilers #20, 22, and 24, at the facility in Cudahy, Milwaukee County, Wisconsin.

(FF) An Elective Operating Permit (86–MJT–037), dated and effective September 23, 1986, issued by the Wisconsin Department of Natural Resources to the Peter Cooper Corporation, limiting the emissions and operation of Boilers #20, 21, 22,23, and 24 at the facility in Oak Creek, Milwaukee County, Wisconsin.

(GG) An Administrative Order (86–241099910–J01), dated and effective October 5, 1986, issued by the Wisconsin Department of Natural Resources to the University of Wisconsin at Milwaukee, Central Heating Plant, limiting the emissions and operation of Boilers #20A, 20B, 20C, and 21 at the facility in

Milwaukee, Milwaukee County, Wisconsin.

(HH) A letter from Donald F. Theiler to William H. Rowe, dated and effective on October 2, 1986, that details the conditions of the compliance plan for the University of Wisconsin at Milwaukee at the facility in Milwaukee, Milwaukee County, Wisconsin.

(II) An Administrative Order (86–241025840–J01), dated and effective September 30, 1986, issued by the Wisconsin Department of Natural Resources to the Vilter Manufacturing Corporation, limiting the emissions and operation of Boilers #20, and 21, at the facility in Milwaukee, Milwaukee County, Wisconsin.

(JJ) An Air Pollution Control Permit (EOP–10–DLJ–82–52–073), dated and effective January 18, 1983, issued by the Wisconsin Department of Natural Resources to J.I. Case, limiting the emissions and operation of Boilers #21 and 22 at the facility in Racine, Racine County, Wisconsin.

(KK) An Administrative Order (86–252006370–J01), dated and effective October 13, 1986, issued by the Wisconsin Department of Natural Resources to S.C. Johnson and Son, Inc., limiting the emissions and operation of Boilers #20, 21, 22, and 23 at the facility in Sturtevant, Racine County, Wisconsin.

(LL) A letter from Donald F. Theiler to Thomas T. Stocksdale, dated and effective on October 13, 1986, that details the conditions of the compliance plan for S.C. Johnson and Son at the facility in Sturtenant, Racine County, Wisconsin.

(MM) An Administrative Order (86–252012530–J01), dated and effective September 29, 1986, issued by the Wisconsin Department of Natural Resources to Southern Wisconsin Center, limiting the emissions and operation of Boilers #20, 21, 22 and 23 at the facility in Union Grove, Racine County, Wisconsin.

(NN) A letter from Donald F. Theiler to George Wade, dated and effective on September 24, 1986, that details the conditions of the compliance plan for Southern Wisconsin Center at the facility in Union Grove, Racine County, Wisconsin.

(OO) An Administrative Order (86–252005050–J01), dated and effective September 30, 1986, issued by the Wisconsin Department of Natural Resources to Western Publishing Company, limiting the emissions and operation of Boilers #20A, 20B, and 21 at the facility in Racine, Racine County, Wisconsin.

(PP) An Air Pollution Control Permit (MIA–12–DAA–83–60–208), dated and effective November 2, 1983, issued by the Wisconsin Department of Natural Resources to Borden Chemical, limiting the emissions and operation of Boiler #20 at the facility in Sheboygan, Sheboygan County, Wisconsin.

(QQ) An Elective Operative Permit (86–SJK–71A), dated and effective May 25, 1988, issued by the Wisconsin Department of Natural Resources to the Wisconsin Power and Light Company, limiting the emissions and operation of Boilers #23, and 24 at the facility in Sheboygan, Sheboygan County, Wisconsin.

(RR) An Air Pollution Control Permit (86–LMW–406), dated and effective September 18, 1986 issued by the Wisconsin Department of Natural Resources to the Wisconsin Power and Light Company, limiting the emissions and operation of Unit 2 at the facility in Portage, Columbia County, Wisconsin.

(SS) An Administrative Order, dated and effective August 1, 1986, issued by the Wisconsin Department of Natural Resources to Oscar Mayer Foods Corporation, limiting the emissions from all sources at the facility in Madison, Dane County, Wisconsin.

(TT) An Administrative Order, dated and effective August 6, 1986, issued by the Wisconsin Department of Natural Resources to the University of Wisconsin, Charter Street Heating Plant, limiting the emissions from all sources at the facility in Madison, Dane County, Wisconsin.

(UU) An Administrative Order (86–114004770–N01), dated and effective September 23, 1986, issued by the Wisconsin Department of Natural Resources to the Universal Foods Corporation, limiting the emissions and operation of Boilers #21 and 22 at the facility in Juneau, Dodge County, Wisconsin.

(VV) An Administrative Order (86–114003340–N01), dated and effective September 23, 1986, issued by the Wisconsin Department of Natural Resources to

John Deere Horicon Works, limiting the emissions and operation of fuel burning equipment at the facility in Horicon, Dodge County, Wisconsin.

(WW) An Administrative Order (86–420044680–N01), dated and effective September 30, 1986, issued by the Wisconsin Department of Natural Resources to the Taycheedah Correctional Institute, limiting the emissions and operation of Boiler #20 at the facility in Taycheedah, Fond du Lac County, Wisconsin.

(XX) An Administrative Order (86–122003640–J01), dated and effective September 30, 1986, issued by the Wisconsin Department of Natural Resources to the Dairyland Power Cooperative, limiting the emissions and operation of Boilers #20 and 21 at the facility in Cassville, Grant County, Wisconsin.

(YY) An Administrative Order (86–123002440–N01), dated and effective September 29, 1986, issued by the Wisconsin Department of Natural Resources to the Iroquois Foundry Company, limiting the emissions and operation of fuel burning equipment at the facility in Browntown, Green County, Wisconsin.

(ZZ) An Administrative Order (86–424017550–J02), dated and effective March 2, 1987, issued by the Wisconsin Department of Natural Resources to the Berlin Foundry Company, limiting the emissions and operation of fuel burning equipment at the facility in Berlin, Green Lake County, Wisconsin.

(AAA) An Administrative Order (86–424021180–N01), dated and effective er 30, 1986, issued by the Wisconsin Department of Natural Resources to the Berlin Tanning and Manufacturing Company, limiting the emissions and operation of fuel burning equipment at the facility in Berlin, Green Lake County, Wisconsin.

(BBB) An Administrative Order (86–128003700–N01), dated and effective September 23, 1986, issued by the Wisconsin Department of Natural Resources to the Carnation Company-Pet Food and Cereal Division, limiting the emissions and operation of Boilers #21 and 22 at the facility in Jefferson, Jefferson County, Wisconsin.

(CCC) An Administrative Order (86–154008030–J01), dated and effective September 29, 1986, issued by the Wisconsin Department of Natural Resources to Frank Brothers, Incorporated, limiting the emissions and operation of fuel burning equipment at the facility in Milton, Rock County, Wisconsin.

(DDD) An Administrative Order (86–154002860–J01), dated and effective September 29, 1986, issued by the Wisconsin Department of Natural Resources to the General Motors Corporation, limiting the emissions and operation of Boilers #21, 22, 23, 24, and 25 at the facility in Janesville, Rock County, Wisconsin.

(EEE) An Administrative Order (86–154004290–N01), dated and effective September 29, 1986, issued by the Wisconsin Department of Natural Resources to George Hormel and Company, limiting the emissions and operation of Boilers #20, 21 and 22 at the facility in Beloit, Rock County, Wisconsin.

(FFF) An Administrative Order (86–999019320–J01), dated and effective September 29, 1986, issued by the Wisconsin Department of Natural Resources to Rock Road of Wisconsin, limiting the emissions and operation of fuel burning equipment at the facility in Janesville, Rock County, Wisconsin.

(GGG) An Administrative Order (86–609037440–N01), dated and effective September 29, 1986, issued by the Wisconsin Department of Natural Resources to the Jacob Leinenkugel Brewing Company, limiting the emissions and operation of Boiler #20 at the facility in Chippewa Falls, Chippewa County, Wisconsin.

(HHH) An Administrative Order (86–609037660–J01), dated and effective September 29, 1986, issued by the Wisconsin Department of Natural Resources to the Northern Wisconsin Center for the Developmentally Disabled, limiting the emissions and operation of Boilers #20, 21, 22, and 23 at the facility in Chippewa Falls, Chippewa County, Wisconsin.

(III) An Air Pollution Control Permit (MIN–04–80–10–028), dated and effective June 19, 1981, issued by the Wisconsin Department of Natural Resources to Lynn Protein, limiting the operation of Boiler #21 at the facility in Clark County, Wisconsin.

(JJJ) A letter from Thomas Woletz to Dale Sleiter, dated and effective on September 9, 1986, that details the conditions of the compliance plan for the

Lynn Protein facility in Clark County, Wisconsin.

(KKK) An Administrative Order (86–618022350–J01), dated and effective September 29, 1986, issued by the Wisconsin Department of Natural Resources to Uniroyal Tire Company, Incorporated, limiting the emissions and operation of Boilers #20, 21, and 22 at the facility in Eau Claire, Chippewa County, Wisconsin.

(LLL) An Administrative Order (86–618027080–J01), dated and effective September 29, 1986, issued by the Wisconsin Department of Natural Resources to the University of Wisconsin Eau Claire Heating Plant, limiting the emissions and operation of Boilers #20 and 21 at the facility in Eau Claire, Chippewa County, Wisconsin.

(MMM) An Administrative Order (86–618026530–N01), dated and effective September 29, 1986, issued by the Wisconsin Department of Natural Resources to the Waste Research and Reclamation Company, limiting the emissions and operation of Boilers #20 and 21 at the facility in Eau Claire, Chippewa County, Wisconsin.

(NNN) An Administrative Order (86–632028430–J01), dated and effective September 29, 1986, issued by the Wisconsin Department of Natural Resources to the G. Heileman Brewing Company, limiting the emissions and operation of Boilers #20, 21, 24, and 25 at the facility in LaCrosse, LaCrosse County, Wisconsin.

(OOO) An Administrative Order (86–632028210–J01), dated and effective November 26, 1986, issued by the Wisconsin Department of Natural Resources to the Trane Company-Main Complex, limiting the emissions and operation of Boilers #20, 21, 22, 23, and 24 at the facility in LaCrosse, LaCrosse County, Wisconsin.

(PPP) An Administrative Order (86–632023590–J01), dated and effective November 26, 1986, issued by the Wisconsin Department of Natural Resources to the Trane Company-Plant 6, limiting the emissions and operation of Boilers #20, 21, and 22 at the facility in LaCrosse, LaCrosse County, Wisconsin.

(QQQ) An Administrative Order (86–632028100–J01), dated and effective September 29, 1986, issued by the Wisconsin Department of Natural Resources to the University of Wisconsin-LaCrosse, limiting the emissions and operation of fuel burning equipment at the facility in LaCrosse, LaCrosse County, Wisconsin.

(RRR) An Administrative Order (86–642028860–N01), dated and effective December 23, 1986, issued by the Wisconsin Department of Natural Resources to the Golden Guernsey Dairy, limiting the emissions and operation of fuel burning equipment at the facility in Sparta, Monroe County, Wisconsin.

(SSS) An Elective Operating Permit (87–JBG–079), dated and effective March 9, 1988, issued by the Wisconsin Department of Natural Resources to the Dairyland Power Cooperative, limiting the emissions and operation of Boiler #20 at the facility in Genoa, Vernon County, Wisconsin.

(ii) Additional information. (A) On June 9, 1992, Wisconsin DNR submitted its SO_2 maintenance plan for the City of Madison, Dane County.

(B) On June 12, 1992, Wisconsin DNR submitted its SO_2 maintenance plan for the City of Milwaukee, Milwaukee County.

(64) On November 17, 1987, the Wisconsin Department of Natural Resources submitted Wisconsin's Rule Natural Resources (NR) 439.03—Reporting; NR 439.09—Inspections; and NR 484.04—Code of Federal Regulation Provisions.

(i) Incorporation by reference.

(A) Wisconsin revised rules NR 439.03, NR 439.09 and NR 484.04, Wisconsin's Administrative Code, effective October 1, 1987.

(65) On March 13, 1989, and May 10, 1990, Wisconsin Department of Natural Resources (WDNR) submitted rule packages AM–2–88 and AM–22–88, respectively, as revisions to its state implementation plan for particulate matter. AM–2–88 was published in December, 1988, and became effective on January 1, 1989. AM–2–88 modifies Chapter NR, Sections 400.02, 404.02, 405.02, 406.04, and 484.03 of the Wisconsin Administrative Code (WAC). AM–22–88 was published in September, 1989, and became effective on October 1, 1989. AM–22–88 modifies Chapter NR, Sections 404.04 and 484.03 of the WAC.

(i) Incorporation by reference.

(A) The rule packages revise NR 400.02, 404.02, 404.04, 405.02, 406.04, and 484.03 of the Wisconsin Administrative Code.

(ii) Additional information.

(A) A January 22, 1993, letter from D. Theiler, Director, Bureau of Air Management, WDNR, provides additional information responding to USEPA's proposed disapproval of the SIP revision, and contains WDNR's commitment to using only test methods approved by USEPA.

(66)–(68) [Reserved]

(69) On November 18, 1992, the State submitted rules regulating volatile organic compound emissions from gasoline dispensing facilities' motor vehicle fuel operations.

(i) Incorporation by reference.

(A) Wisconsin Administrative Code, Chapter NR 420 Control of Organic Compound Emissions from Petroleum and Gasoline Sources; Section 420.02 Definitions, Sections NR 420.02(8m), (24m), (32m), (38m), (39m); Section NR 420.045 Motor Vehicle Refueling; published in Wisc. Admin. Code in January 1993, and took effect on February 1, 1993.

(B) Wisconsin Administrative Code, Chapter NR 425 Compliance Schedules, Exceptions, Registration and Deferrals for Organic Compound Emissions Sources in Chapters 419 to 424; Section 425.035 Throughput Reporting and Compliance Schedules for Motor Vehicle Refueling; published in Wisc. Admin. Code in January 1993, and took effect on February 1, 1993.

(C) Wisconsin Administrative Code, Chapter NR 439 Reporting, Recordkeeping, Testing, Inspection and Determination of Compliance Requirements; Section NR 439.06(3)(c); Section NR 439.06(3)(i); published in the Wisc. Admin. Code in January 1993, and took effect on February 1, 1993.

(D) Wisconsin Administrative Code, Chapter NR 484 Incorporation by Reference; Section 484.05(1) Test Method 21 in appendix A of 40 CFR part 60 is incorporated by reference; Section NR 484.06(2) Other Materials (introduction); Section NR 484.06(2) (u) and (v) were created to incorporate San Diego Air Pollution Control District Test Procedures TP–91–1 and TP–91–2; incorporated by reference in Wisc. Admin. Code in January 1993, and took effect on February 1, 1993.

(E) Wisconsin Administrative Code, Chapter NR 494 Enforcement and Penalties for Violation of Air Pollution Control Provisions; renumbered Sections NR 494.025 and 494.03 to NR 494.03 and 494.05; Section NR 494.04 Tagging Gasoline Dispensing Equipment; published in the Wisc. Admin. Code in January 1993 and took effect on February 1, 1993.

(ii) Additional materials.

(A) Stage II Vapor Recovery SIP Program Description dated November 15, 1992.

(B) Letter from WDNR dated March 29, 1993, citing State authority under Sections NR 144.98, 144.99, 144.423, and 144.426, Wisc. Admin. Code, to enforce the Stage II program.

(C) Packet of public education materials on Stage II distributed by WDNR.

(70) On July 2, 1993, the State of Wisconsin submitted a requested revision to the Wisconsin State Implementation Plan (SIP) intended to satisfy the requirements of section 182 (a)(3)(B) of the Clean Air Act as amended in 1990. Included were State rules establishing procedures for stationary sources throughout the state to report annual emissions of volatile organic compounds (VOC) and oxides of nitrogen (NO_x) as well as other pollutants.

(i) Incorporation by reference. Wisconsin Administrative Code, Chapter NR 438, Air Contaminant Emission Reporting Requirements, published in the Wisconsin Register, May 1993, effective June 1, 1993.

(71) [Reserved]

(72) On November 18, 1992 and January 21, 1993, the State of Wisconsin submitted a Small Business Stationary Source Technical and Environmental Assistance Program for incorporation in the Wisconsin State Implementation Plan as required by Section 507 of the Clean Air Act. Included in the State's submittal were portions of 1991 Wisconsin Act 269 and 1991 Wisconsin Act 302.

(i) Incorporation by reference.

(A) Section 15.157(10)—small business environmental council—91–92 Wis. Stats., Effective date: May 14, 1992.

(B) Section 144.36—small business stationary source technical and environmental compliance assistance program—91–92 Wis. Stats., Effective date: May 14, 1992.

(C) Section 144.399(2)(c)—fees—91–92 Wis. Stats., Effective date: July 1, 1992.

(D) Section 560.03(9)—business and industrial development—91–92 Wis. Stats., Effective date: May 14, 1992.

(E) Section 560.11—small business environmental council—91–92 Wis. Stats., Effective date: May 14, 1992.

(F) Section 560, Subchapter III—permit information center—91–92 Wis. Stats., Effective date: November 17, 1983.

(G) Section 96—nonstatutory provisions; development—91 WisAct 302, 1991 Laws of Wisconsin. Effective date May 14, 1992.

(ii) Other material.

(A) Program description.

(73) Revisions to the ozone State Implementation Plan (SIP) were submitted by the Wisconsin Department of Natural Resources on September 22, 1993, and January 14, 1994. These rules replace the 154 series stationary source VOC regulations previously contained in Wisconsin's ozone SIP with 400 series regulations which are consistent with the current Wisconsin Administrative Code. These rules are only being approved as they apply to the ozone SIP.

(i) Incorporation by reference. The following chapters of the Wisconsin Administrative Code are incorporated by reference.

(A) Chapter NR 400: AIR POLLUTION CONTROL DEFINITIONS. NR 400.01 as published in the (Wisconsin) Register, February, 1990, No. 410, effective March 1, 1990. NR 400.02 as published in the (Wisconsin) Register, June, 1993, No. 450, effective July 1, 1993.

(B) Chapter NR 419: CONTROL OF ORGANIC COMPOUND EMISSIONS, except for NR 419.07. NR 419.01, 419.02, 419.03, 419.04 and 419.06 as published in the (Wisconsin) Register, February, 1990, No. 410, effective March 1, 1990. NR 419.05 as published in the (Wisconsin) Register, December, 1993, No. 456, effective January 1, 1994.

(C) Chapter NR 420: CONTROL OF ORGANIC COMPOUND EMISSIONS FROM PETROLEUM AND GASOLINE SOURCES. NR 420.01 as published in the (Wisconsin) Register, February, 1990, No. 410, effective March, 1, 1990. NR 420.02 and 420.045 as published in the (Wisconsin) Register, January, 1993, No. 445, effective February 1, 1993. NR 420.03 and 420.04 as published in the (Wisconsin) Register, December, 1993, No. 456, effective January 1, 1994. NR 420.05 as published in the (Wisconsin) Register, May, 1992, No. 437, effective June 1, 1992.

(D) Chapter NR 421: CONTROL OF ORGANIC COMPOUND EMISSIONS FROM CHEMICAL, COATINGS AND RUBBER PRODUCTS MANUFACTURING. NR 421.01 as published in the (Wisconsin) Register, February, 1990, No. 410, Effective March 1, 1990. NR 421.02, 421.03, 421.05 and 421.06 as published in the (Wisconsin) Register, December, 1993, No. 456, effective January 1, 1994. NR 421.04 as published in the (Wisconsin) Register, May, 1992, No. 437, effective June 1, 1992.

(E) Chapter NR 422: CONTROL OF ORGANIC COMPOUND EMISSIONS FROM SURFACE COATING, PRINTING AND ASPHALT SURFACING OPERATIONS. NR 422.01, 422.05, 422.06, 422.07, 422.08, 422.085, 422.09, 422.10, 422.11, 422.12, 422.13, 422.155 and 422.16 as published in the (Wisconsin) Register, February, 1990, No. 410, effective March 1, 1990. NR 422.02, 422.03, 422.04, 422.14 and 422.15 as published in the (Wisconsin) Register, December, 1993, No. 456, effective January 1, 1994.

(F) Chapter NR 423: CONTROL OF ORGANIC COMPOUND EMISSIONS FROM SOLVENT CLEANING OPERATIONS. NR 423.01 as published in the (Wisconsin) Register, February, 1990, No. 410, effective March 1, 1990. NR 423.02 as published in the (Wisconsin) Register, January, 1987, No. 385, effective February 1, 1988. NR 423.03, 423.04, and 423.05 as published in the (Wisconsin) Register, December, 1993, No. 456, effective January 1, 1994.

(G) Chapter NR 424: CONTROL OF ORGANIC COMPOUND EMISSIONS FROM PROCESS LINES. NR 424.01 and 424.03 as published in the (Wisconsin) Register, February, 1990, No. 410, effective March 1, 1990. NR 424.02 as published in the (Wisconsin) Register, April, 1988, No. 388, effective May 1,

1988. NR 424.04 as published in the (Wisconsin) Register, December, 1993, No. 456, effective January 1, 1994.

(H) Chapter NR 425: COMPLIANCE SCHEDULES, EXCEPTIONS, REGISTRATION AND DEFERRALS FOR ORGANIC COMPOUND EMISSION SOURCES IN CHS. NR 419 TO 424. NR 425.01 and 425.02 as published in the (Wisconsin) Register, February, 1990, No. 410, effective March 1, 1990. NR 425.03 425.04 and 425.05 as published in the (Wisconsin) Register, December, 1993, No. 456, effective January 1, 1994. NR 425.035 as published in the (Wisconsin) Register, January, 1993, No. 445, effective February 1, 1993.

(I) Chapter NR 439: REPORTING, RECORDKEEPING, TESTING, INSPECTION AND DETERMINATION OF COMPLIANCE REQUIREMENTS. NR 439.01 and 439.085 as published in the (Wisconsin) Register, May, 1992, No. 437, effective June 1, 1992. NR 439.02, 439.03, 439.04, 439.05, 439.055, 439.06, 439.07, 439.075, 439.09, 439.095 and 439.11 as published in the (Wisconsin) Register, December, 1993, No. 456, effective January 1, 1994. NR 439.08 as published in the (Wisconsin) Register, May, 1993, No. 449, effective June 1, 1993. NR 439.10 as published in the (Wisconsin) Register, September, 1987, No. 381, effective October 1, 1987.

(J) Chapter NR 484: INCORPORATION BY REFERENCE. NR 484.01 as published in the (Wisconsin) Register, May, 1992, No. 437, effective June 1, 1992. NR 484.02 as published in the (Wisconsin) Register, September, 1986, No. 369, effective October 1, 1986. NR 484.03 as published in the (Wisconsin) Register, May, 1993, No. 449, effective June 1, 1993. NR 484.04, 484.05 and 484.06 as published in the (Wisconsin) Register, December, 1993, No. 456, effective January 1, 1994. NR 484.08 and 484.09 as published in the (Wisconsin) Register, October, 1992, No. 442, effective November 1, 1992.

(74) On November 24, 1992, the State of Wisconsin requested a revision to the Wisconsin State Implementation Plan (SIP) to maintain the National Ambient Air Quality Standards for SO_2 in Douglas County Wisconsin. Included were State orders and permits limiting emissions from CLM Corporation lime kilns and requiring Continuous Emission Monitoring Systems on these kilns.

(i) Incorporation by reference.

(A) Wisconsin Order AM–91–816A issued by WDNR to CLM Corporation on June 13, 1991. Wisconsin Administrative Order NWD–89–08 issued by the WDNR to CLM Corporation on December 20, 1989.

(75) On November 15, 1992, January 15, 1993, July 28, 1993, and January 14, 1994 the State of Wisconsin submitted emergency and permanent rules for issuance of New Source Review permits for new and modified air pollution sources in nonattainment areas, as required by section 182(a)(2)(c) of the Clean Air Act. The emergency rules have now been superseded by the permanent rules to clarify and specify the NSR requirements that sources must meet under the Clean Air Act. Also submitted were portions of 1991 Wisconsin Act 302.

(i) Incorporation by reference.

(A) NR 400—Wisconsin Administrative Code, Air Pollution Control, Effective date January 1, 1994.

(B) NR 406—Wisconsin Administrative Code, Construction Permits, Effective date January 1, 1994.

(C) NR 408—Wisconsin Administrative Code, Nonattainment Area Major Source Permits, Effective date June 1, 1993.

(D) NR 490—Wisconsin Administrative Code, Procedures for Noncontested Case Public Hearings, Effective date January 1, 1994.

(E) Section 144.30—91–92 Wisconsin Statutes. Effective date May 14, 1992.

(F) Section 144.391—91–92 Wisconsin Statutes. Effective date May 14, 1992.

(G) Section 144.392—Construction permit application and review, 91–92 Wisconsin Statutes. Effective date May 14, 1992.

(H) Section 144.393—91–92 Wisconsin Statutes. Effective date May 14, 1992.

(i) Section 144.394—Permit conditions, 91–92 Wisconsin Statutes. Effective date May 14, 1992.

(ii) Additional material.

(A) Wisconsin's Emergency NSR regulations. Effective date November 15, 1992.

(B) On December 12, 1994, Donald Theiler, Director, Bureau of Air Management, WDNR sent a letter to

USEPA clarifying Wisconsin's interpretation of ''any period of 5 consecutive years.'' Wisconsin interprets the term as referring to the five-year period including the calendar year in which the increase from the particular change will occur and the four immediately preceding years.

(76) On January 14, 1994, the State of Wisconsin submitted its rules for an Operating Permits program intended to satisfy federal requirements for issuing federally enforceable operating permits.

(i) Incorporation by reference.

(A) NR 407—Wisconsin Administrative Code, Operating Permits, Effective date January 1, 1994.

(77) On November 15, 1993, the State of Wisconsin submitted a revision to the State Implementation Plan (SIP) for the implementation of an employee commute options (ECO) program in the Milwaukee-Racine, severe–17, ozone nonattainment area. This revision included Chapter NR 486 of the Wisconsin Administrative Code, effective October 1, 1993, and Wisconsin Statutes sections 144.3712, enacted on April 30, 1992 by Wisconsin Act 302.

(i) Incorporation by reference.

(A) Chapter NR 486 of the Wisconsin Administrative Code, effective October 1, 1993.

(B) Wisconsin Statutes, section 144.3712, enacted on April 30, 1992 by Wisconsin Act 302.

(78) On November 15, 1993, the State of Wisconsin submitted a revision to the State Implementation Plan (SIP) for the implementation of a motor vehicle inspection and maintenance (I/M) program in the Milwaukee-Racine and Sheboygan ozone nonattainment areas. This revision included 1993 Wisconsin Act 288, enacted on April 13, 1994, Wisconsin Statutes Sections 110.20, 144.42, and Chapter 341, Wisconsin Administrative Code Chapter NR 485, SIP narrative, and the State's Request for Proposal (RFP) for implementation of the program.

(i) Incorporation by reference.

(A) 1993 Wisconsin Act 288, enacted on April 13, 1994.

(B) Wisconsin Statutes, Sections 110.20, 144.42, and Chapter 341, effective November 1, 1992.

(79) On October 21, 1994, the Wisconsin Department of Natural Resources (WDNR) submitted a plan modifying the SO_2 emission limits applicable to Rhinelander Paper Company facility, located in the City of Rhinelander, Oneida County, Wisconsin.

(i) *Incorporation by reference.*

(A) A Consent Order (AM–94–38), effective August 22, 1994 issued by the Wisconsin Department of Natural Resources (WDNR) and signed by Donald F. Theiler for the WDNR and Melvin L. Davidson for the Rhinelander Paper Company. Rhinelander Paper Company is located in Rhinelander (Oneida County), Wisconsin. This Order limits the overall SO_2 emissions from the Rhinelander Paper Company, and imposes more stringent SO_2 limits for the source's stoker and cyclone boilers and vapor compression evaporator. Sampling and testing of fuel, as well as monitoring criteria are documented within the Order.

(B) A letter dated August 29, 1994 from the WDNR to Jerry Neis of Rhinelander Paper Company, requesting clarification for sampling methodologies for all fuel and the source of the sludge used as a fuel source.

(C) A response letter dated October 19, 1994 from Jerome T. Neis of Rhinelander Paper Company to the WDNR, detailing sampling methodologies for all fuel and clarifying the source of the sludge used as a fuel source.

(80) [Reserved]

(81) A revision to the ozone State Implementation Plan (SIP) was submitted by the Wisconsin Department of Natural Resources on June 30, 1994, and supplemented on July 15, 1994. This revision consists of volatile organic compound regulations which establish reasonably available control technology for yeast manufacturing, molded wood parts or products coating, and wood door finishing.

(i) Incorporation by reference. The following sections of the Wisconsin Administrative Code are incorporated by reference.

(A) NR 422.02(7), (34) as amended and published in the (Wisconsin) Register, August, 1994, No. 464, effective September 1, 1994. NR 422.02(12e), (18m), (24s), (27m), (33d), (34m), (46m), and (51) as

created and published in the (Wisconsin) Register, August, 1994, No. 464, effective September 1, 1994.

(B) NR 422.03(intro.) as amended and published in the (Wisconsin) Register, August, 1994, No. 464, effective September 1, 1994. NR 422.03 (8) and (9) as created and published in the (Wisconsin) Register, August, 1994, No. 464, effective September 1, 1994.

(C) NR 422.04(1)(a) as amended and published in the (Wisconsin) Register, August, 1994, No. 464, effective September 1, 1994.

(D) NR 422.132 as created and published in the (Wisconsin) Register, August, 1994, No. 464, effective September 1, 1994.

(E) NR 422.135 as created and published in the (Wisconsin) Register, August, 1994, No. 464, effective September 1, 1994.

(F) NR 424.02 (3), (4), (5), (6), and (7) as created and published in the (Wisconsin) Register, June, 1994, No. 462, effective July 1, 1994.

(G) NR 424.05 as created and published in the (Wisconsin) Register, June, 1994, No. 462, effective July 1, 1994.

(H) NR 439.04(5)(a)(intro.) as amended and published in the (Wisconsin) Register, August, 1994, No. 464, effective September 1, 1994.

(I) NR 439.075(2)(a)4. as amended and published in the (Wisconsin) Register, June, 1994, No. 462, effective July 1, 1994.

(J) NR 439.09(7m) as created and published in the (Wisconsin) Register, June, 1994, No. 462, effective July 1, 1994. NR 439.09(9)(b) as amended and published in the (Wisconsin) Register, June, 1994, No. 462, effective July 1, 1994.

(K) NR 439.095 (1)(e) and (5)(e) as created and published in the (Wisconsin) Register, June, 1994, No. 462, effective July 1, 1994.

(L) NR 484.05(9) as renumbered from NR 484.05(2), amended and published in the (Wisconsin) Register, August, 1994, No. 464, effective September 1, 1994.

(82) Revisions to the ozone State Implementation Plan (SIP) were submitted by the Wisconsin Department of Natural Resources on April 17, 1990, and June 30, 1994, and supplemented on July 15, 1994. Included in these revisions is a volatile organic compound (VOC) regulation which establishes reasonably available control technology (RACT) for screen printing facilities. Additionally, the State submitted current negative declarations for pre-1990 Control Technology Guideline (CTG) categories for which Wisconsin does not have rules as well as a list of major sources affected by the 13 CTG categories that USEPA is required to issue pursuant to sections 183(a), 183(b)(3) and 183(b)(4) of the Clean Air Act (Act).

(i) Incorporation by reference. The following sections of the Wisconsin Administrative Code are incorporated by reference.

(A) NR 422.02(11m), (21s), (41p), (41s), (41v) and (42m) as created and published in the (Wisconsin) Register, June, 1994, No. 462, effective July 1, 1994. NR 422.02(32) as amended and published in the (Wisconsin) Register, June, 1994, No. 462, effective July 1, 1994.

(B) NR 422.03(4m) as created and published in the (Wisconsin) Register, June, 1994, No. 462, effective July 1, 1994.

(C) NR 422.145 as created and published in the (Wisconsin) Register, June, 1994, No. 462, effective July 1, 1994.

(D) NR 439.04(4)(intro.), (5)(a)1. and (5)(a)2. as amended and published in the (Wisconsin) Register, June, 1994, No. 462, effective July 1, 1994.

(ii) Additional material.

(A) On April 17, 1990, and June 30, 1994, Wisconsin submitted negative declarations for the following source categories: Leaks from petroleum refinery equipment; Manufacture of synthesized pharmaceutical products; Mmanufacture of pneumatic rubber tires; Automobile and light duty truck manufacturing; Fire truck and emergency response vehicle manufacturing; Manufacture of high-density polyethylene, polypropylene, and polystyrene resins, a.k.a. polymer manufacturing; Leaks from synthetic organic chemical and polymer manufacturing equipment; Air oxidation processes at synthetic organic chemical manufacturing industries; and Equipment leaks from natural gas/gasoline processing

plants. These negative declarations are approved into the Wisconsin ozone SIP.

(B) On June 30, 1994, Wisconsin submitted a list of facilities subject to the post-enactment source categories listed in Appendix E to the General Preamble. 57 FR 18070, 18077 (April 28, 1992). The list included facilities covered by the source categories cleanup solvents, offset lithography, plastic parts coating, and wood furniture coating. This list is approved into the Wisconsin ozone SIP.

(83) A revision to the ozone State Implementation Plan (SIP) was submitted by the Wisconsin Department of Natural Resources on June 14, 1995. This revision is a volatile organic compound (VOC) regulation which requires controls on facilities that perform autobody refinishing operations.

(i) Incorporation by reference. The following sections of the Wisconsin Administrative Code are incorporated by reference.

(A) NR 422.02(intro.) and (47), 422.03 (1) and (3) and 484.05(1) as amended and published in the (Wisconsin) Register, August, 1995 and effective September 1, 1995.

(B) NR 422.02 (1), (1x), (3m), (12d), (33j), (34s), (34v), (37s), (42n), (47e) and (49m) and 422.095 as created and published in the (Wisconsin) Register, August, 1995 and effective September 1, 1995.

(C) NR 422.02(1s) as renumbered from 422.02(1) and published in the (Wisconsin) Register, August, 1995 and effective September 1, 1995.

(84) A revision to the ozone State Implementation Plan (SIP) was submitted by the Wisconsin Department of Natural Resources on February 17, 1995, and supplemented on June 14, 1995. This revision consists of a volatile organic compound regulation that requires controls for gasoline storate tank vent pipes.

(i) Incorporation by reference. The following section of the Wisconsin Administrative Code is incorporated by reference.

(A) NR 420.035 as created and published in the (Wisconsin) Register, July, 1994, No. 463, effective August 1, 1994.

(85) A revision to the ozone State Implementation Plan (SIP) was submitted by the Wisconsin Department of Natural Resources on April 12, 1995, and supplemented on June 14, 1995, and January 19, 1996. This revision consists of a volatile organic compound regulation that requires the control of emissions from traffic markings.

(i) Incorporation by reference. The following section of the Wisconsin Administrative Code is incorporated by reference.

(A) NR 422.02(16e), (42q), (42s) and (47m) as created and published in the (Wisconsin) Register, July, 1994, No. 463, effective August 1, 1994.

(B) NR 422.17 as created and published in the (Wisconsin) Register, July, 1994, No. 463, effective August 1, 1994.

(86) A revision to the ozone State Implementation Plan (SIP) was submitted by the Wisconsin Department of Natural Resources on April 12, 1995, and supplemented on June 14, 1995, and January 19, 1996. This revision consists of a volatile organic compound regulation that requires additional controls on solvent metal cleaning operations. This rule is more stringent than the RACT rule it is replacing.

(i) Incorporation by reference. The following section of the Wisconsin Administrative Code is incorporated by reference.

(A) NR 423.02(10) as renumbered from NR 423.02(9), amended and published in the (Wisconsin) Register, August, 1994, No. 464, effective September 1, 1994. NR 423.02(11) as renumbered from NR 423.02(10) and published in the (Wisconsin) Register, August, 1994, No. 464, effective September 1, 1994. NR 423.02(9) and (12) as created and published in the (Wisconsin) Register, August, 1994, No. 464, effective September 1, 1994.

(B) NR 423.03 as created and published in the (Wisconsin) Register, August, 1994, No. 464, effective September 1, 1994.

(C) NR 425.03(12)(a)7. as amended and published in the (Wisconsin) Register, August, 1994, No. 464, effective September 1, 1994.

(87) The state of Wisconsin requested a revision to the Wisconsin State Implementation Plan (SIP). This revision is for the purpose of establishing and

implementing a Clean-Fuel Fleet Program to satisfy the federal requirements for a Clean Fuel Fleet Program to be part of the SIP for Wisconsin.

(i) Incorporation by reference.

(A) Chapter 487 of the Wisconsin Administrative Code, effective June 1, 1995.

(B) Wisconsin Statutes, section 144.3714, enacted on April 30, 1992, by Wisconsin Act 302.

(88) A revision to the ozone State Implementation Plan (SIP) was submitted by the Wisconsin Department of Natural Resources on June 30, 1994, and supplemented on July 15, 1994. This revision consists of volatile organic compound regulations which establish reasonably available control technology for iron and steel foundries.

(i) *Incorporation by reference.* The following sections of the Wisconsin Administrative Code are incorporated by reference.

(A) NR 419.02(1s), (1t), (1u), (3m) and (6m) as created and published in the (Wisconsin) Register, June, 1994, No. 462, effective July 1, 1994.

(B) NR 419.08 as created and published in the (Wisconsin) Register, June, 1994, No. 462, effective July 1, 1994.

(89) A revision to the ozone State Implementation Plan (SIP) was submitted by the Wisconsin Department of Natural Resources on May 12, 1995, and supplemented on June 14, 1995 and November 14, 1995. This revision consists of volatile organic compound regulations which establish reasonably available control technology for lithographic printing facilities.

(i) Incorporation by reference. The following sections of the Wisconsin Administrative Code are incorporated by reference.

(A) NR 422.02(6), (18s), (21e), (24p), (24q), (28g), (37v), (41y) and (50v) as created and published in the (Wisconsin) Register, June, 1995, No. 474, effective July 1, 1995.

(B) NR 422.04(4) as amended and published in the (Wisconsin) Register, June, 1995, No. 474, effective July 1, 1995.

(C) NR 422.142 as created and published in the (Wisconsin) Register, June, 1995, No. 474, effective July 1, 1995.

(D) NR 439.04(5)(d)1.(intro.) as renumbered from 439.04(5)(d)(intro.), amended, and published in the (Wisconsin) Register, June, 1995, No. 474, effective July 1, 1995.

(E) NR 439.04(5)(d)1. a. and b. as renumbered from 439.04(5)(d)1. and 2., and published in the (Wisconsin) Register, June, 1995, No. 474, effective July 1, 1995.

(F) NR 439.04(5)(d)2 as created and published in the (Wisconsin) Register, June, 1995, No. 474, effective July 1, 1995.

(G) NR 439.04(5)(e)(intro.) as amended and published in the (Wisconsin) Register, June, 1995, No. 474, effective July 1, 1995.

(H) NR 439.06(3)(j) as created and published in the (Wisconsin) Register, June, 1995, No. 474, effective July 1, 1995.

(I) NR 484.04(13m), (15e) and (15m) as created and published in the (Wisconsin) Register, June, 1995, No. 474, effective July 1, 1995.

(J) NR 484.10(39m) as created and published in the (Wisconsin) Register, June, 1995, No. 474, effective July 1, 1995.

(90) A revision to the ozone State Implementation Plan (SIP) was submitted by the Wisconsin Department of Natural Resources on May 12, 1995 and later supplemented on June 14, 1995. This revision consists of volatile organic compound regulations which establish reasonably available control technology for facilities that perform wood furniture coating operations.

(i) Incorporation by reference. The following sections of the Wisconsin Administrative Code are incorporated by reference.

(A) NR 422.02(3e),(7m), (16g), (16i), (16k), (41w), (42o), (42u), (50e), (50m) and (52) as created and published in the (Wisconsin) Register, August, 1995, No. 476, effective September 1, 1995.

(B) NR 422.02(47) as amended and published in the (Wisconsin) Register, August, 1995, No. 476, effective September 1, 1995.

(C) NR 422.125 as created and published in the (Wisconsin) Register, August, 1995, No. 476, effective September 1, 1995.

(D) NR 422.15(1)(intro.) as amended and published in the (Wisconsin) Register, August, 1995, No. 476, effective September 1, 1995.

(91) The State of Wisconsin requested a revision to the Wisconsin State Implementation Plan (SIP). This revision is for the purpose of satisfying the rate-of-progress requirement of section 182(b) and the contingency measure requirement of section 172(c)(9) of the Clean Air Act (Act) which will aid in ensuring the attainment of the national ambient air quality standard (NAAQS) for ozone.

(i) Incorporation by reference.

(A) Wisconsin Statutes, sections 144.31(1)(e) and (f), enacted on April 30, 1992, by Wisconsin Act 302.

(92) [Reserved]

(93) A revision to the ozone State Implementation Plan (SIP) was submitted by the Wisconsin Department of Natural Resources on December 11, 1995 and later supplemented on January 12, 1996. This revision consists of a volatile organic compound regulation that establishes reasonably available control technology for facilities that use industrial adhesives.

(i) Incorporation by reference. The following sections of the Wisconsin Administrative Code are incorporated by reference.

(A) NR 422.02(1e), (1m) and (28j) as created and published in the (Wisconsin) Register, August, 1995, No. 476, effective September 1, 1995.

(B) NR 422.127 as created and published in the (Wisconsin) Register, August, 1995, No. 476, effective September 1, 1995.

(C) NR 422.132(1)(c) as repealed, recreated and published in the (Wisconsin) Register, August, 1995, No. 476, effective September 1, 1995.

[37 FR 10902, May 31, 1972]

EDITORIAL NOTE: For FEDERAL REGISTER citations affecting § 52.2570, see the List of CFR Sections Affected in the Finding Aids section of this volume.

§ 52.2571 Classification of regions.

The Wisconsin plan was evaluated on the basis of the following classifications:

Air quality control region	Pollutant				
	Particulate matter	Sulfur oxides	Nitrogen dioxide	Carbon monoxide	Ozone
Duluth (Minnesota)-Superior (Wisconsin) Interstate	I	II	III	III	III
North Central Wisconsin Intrastate	II	III	III	III	III
Lake Michigan Intrastate	II	III	III	III	III
Southeast Minnesota-La Crosse (Wisconsin) Interstate	II	IA	III	III	III
Southern Wisconsin Intrastate	II	III	III	III	III
Southeastern Wisconsin Intrastate	I	II	III	III	I
Rockford (Illinois)-Jamesville-Beloit (Wisconsin) Interstate	II	III	III	III	III
Metropolitan Dubuque Interstate	I	III	III	III	III

[37 FR 10902, May 31, 1972, as amended at 39 FR 16348, May 8, 1974; 45 FR 2322, Jan. 11, 1980]

§ 52.2572 Approval status.

With the exceptions set forth in this subpart, the Administrator approves Wisconsin's plans for the attainment and maintenance of the National Ambient Air Quality Standards under section 110 of the Clean Air Act. Furthermore, the Administrator findsthe plans satisfy all requirements of Part D, Title I, of the Clean Air Act as amended in 1977, except as noted below. In addition, continued satisfaction of the requirements of Part D for the Ozone portion of the State Implementation Plan depends on the adoption and submittal of RACT requirements on: (1) Group III Control Techniques Guideline sources within 1 year after January 1st following the issuance of each Group III control technique guideline; and (2) major (actual emissions equal or greater than 100 tons VOC per year) non-control technique guideline sources in accordance with the State's schedule contained in the 1982 Ozone SIP revision for Southeastern Wisconsin.

[49 FR 8923, Mar. 9, 1984]

§ 52.2573 General requirements.

(a) The requirements of § 51.116(c) of this chapter are not met since the plan does not provide for public availability of emission data.

(b) *Regulation for public availability of emission data.* (1) Any person who cannot obtain emission data from the Agency responsible for making emission data available to the public, as specified in the applicable plan, concerning emissions from any source subject to emission limitations which are part of the approved plan may request that the appropriate Regional Administrator obtain and make public such data. Within 30 days after receipt of any such written request, the Regional Administrator shall require the owner or operator of any such source to submit information within 30 days on the nature and amounts of emissions from such source and any other information as may be deemed necessary by the Regional Administrator to determine whether such source is in compliance with applicable emission limitations or other control measures that are part of the applicable plan.

(2) Commencing after the initial notification by the Regional Administrator pursuant to paragraph (b)(1) of this section, the owner or operator of the source shall maintain records of the nature and amounts of emissions from such source and any other information as may be deemed necessary by the Regional Administrator to determine whether such source is in compliance with applicable emission limitations or other control measures that are part of the plan. The information recorded shall be summarized and reported to the Regional Administrator, on forms furnished by the Regional Administrator, and shall be submitted within 45 days after the end of the reporting period. Reporting periods are January 1–June 30 and July 1-December 31.

(3) Information recorded by the owner or operator and copies of this summarizing report submitted to the Regional Administrator shall be retained by the owner or operator for 2 years after the date on which the pertinent report is submitted.

(4) Emission data obtained from owners or operators of stationary sources will be correlated with applicable emission limitations and other control measures that are part of the applicable plan and will be available at the appropriate regional office and at other locations in the state designated by the Regional Administrator.

[37 FR 10902, May 31, 1972, as amended at 40 FR 55334, Nov. 28, 1975; 51 FR 40676, Nov. 7, 1986]

§ 52.2574 Legal authority.

(a) The requirements of § 51.230(f) of this chapter are not met since section 144.33 of the Wisconsin Air Law will preclude the release of emission data in certain situations.

[37 FR 10902, May 31, 1972, as amended at 51 FR 40676, Nov. 7, 1986]

§ 52.2575 Control strategy: Sulfur dioxide.

(a) Part D—Approval—With the exceptions set forth in this subpart, the Administrator approved the Wisconsin sulfur dioxide control plan.

(1) Part D—No action—USEPA takes no action on the Wisconsin sulfur dioxide rules NR 154.12 (1), (2) and (3).

(b) Sulfur dioxide maintenance plan.

(1) An SO_2 maintenance plan was submitted by the State of Wisconsin on June 9, 1992, for the City of Madison, Dane County.

(2) An SO_2 maintenance plan was submitted by the State of Wisconsin on June 12, 1992, for the City of Milwaukee, Milwaukee County.

[46 FR 21168, Apr. 9, 1981, as amended at 58 FR 29786 and 29790, May 24, 1993]

§ 52.2576 [Reserved]

§ 52.2577 Attainment dates for national standards.

The following table presents the latest dates by which the national standards are to be attained. The dates reflect the information presented in Wisconsin's plan, except where noted.

Air Quality Control Region	Pollutant						
	TSP		SO_2		NO_2	CO	O_3
	Primary	Secondary	Primary	Secondary			
Duluth (Minnesota)-Superior (Wisconsin Interstate (AQCR 129):							
a. Primary/Secondary non-attainment areas.	a	f	b	a	c	c	c.
b. Remainder of AQCR	b	c	c	c	c	c	c.
North Central Wisconsin Intrastate (AQCR 238):							
a. Primary/Secondary non-attainment areas.	b	f	d	c	c	c	d.
b. Remainder of AQCR	b	c	c	c	c	c	c.
Lake Michigan Intrastate (AQCR 237):							
a. Primary/Secondary non-attainment areas.	b	f	c	c	c	c	d.
b. Remainder of AQCR	b	c	c	c	c	c	c.
Southeast Minnesota-LaCrosse (Wisconsin) Interstate (AQCR 128):							
a. Primary/Secondary non-attainment areas.	b	c	a	a	c	c	c.
b. Remainder of AQCR	b	c	c	c	c	c	c.
Southern Wisconsin Intrastate (AQCR 240):							
a. Primary/Secondary non-attainment areas.	g	f	d	c	c	c	d.
b. Remainder of AQCR	b	c	c	c	c	c	c.
Southeastern Wisconsin Intrastate (AQCR 239):							
a. Primary/Secondary non-attainment areas.	d	d	b	a	c	e	e.
b. Remainder of AQCR	b	c	c	c	c	c	c.
Rockford (Illinois)-Janesville-Beloit (Wisconsin) Interstate (AQCR 73) (Wisconsin portion):							
a. Primary/Secondary non-attainment areas.	d	d	c	c	c	c	c.
b. Remainder of AQCR	b	c	c	c	c	c	c.
Metropolitan Dubuque Interstate (AQCR 68):							
a. Primary/Secondary non-attainment areas.	a	a	c	c	c	c	c.
b. Remainder of AQCR	b	c	c	c	c	c	c.

a. July, 1975.
b. Air quality levels presently below primary standard or are unclassifiable.
c. Air quality levels presently below secondary standard or are unclassifiable.
d. December 31, 1982.
e. December 31, 1987.
f. 18-Month extension granted for plan submission and identification of attainment date.
g. No attainment plan was submitted.

NOTE: Sources subject to the plan requirements and attainment dates established under section 110(a)(2)(A) prior to the 1977 Clean Air Act Amendments remain obligated to comply with these requirements by the earlier deadlines. The earlier attainment dates are set out at 40 CFR 52.2577(1978).

For actual nonattainment designations refer to 40 CFR part 81.

Dates or footnotes which are italicized are prescribed by the Administrator because the plan did not provide a specific date or the date provided was not acceptable.

[48 FR 9862, Mar. 9, 1983]

§ 52.2578 Compliance schedules.

(a) [Reserved]

(b) The requirements of § 51.262(a) of this chapter are not met since compliance schedules with adequate increments of progress have not been submitted for every source for which they are required.

(c) Federal compliance schedules. (1) Except as provided in paragraph (c)(3) of this section, the owner or operator of any stationary source in the Southeast Wisconsin AQCR subject to the following emission limiting regulation in the Wisconsin implementation plan shall comply with the the applicable

compliance schedule in paragraph (c)(2) of this section: Wisconsin Air Pollution Control Regulation NR 154.13.

(2) (i) *Compliance schedules.* The owner or operator of any stationary source in the Southeast Wisconsin AQCR subject to NR 154.13 shall notify the Administrator no later than October 1, 1973, of his intent either to install necessary control systems per Wisconsin Air Pollution Control Regulation NR 154.13(2) or to switch to an exempt solvent per Wisconsin Air Pollution Control Regulation NR 154.13(3) to comply with the requirements of Wisconsin Air Pollution Control Regulation NR 154.13.

(ii) Any owner or operator of a stationary source subject to paragraph (c)(2)(i) of this section who elects to comply with the requirements of NR 154.13 by installing a control system shall take the following actions with respect to the source no later than the specified dates.

(*a*) November 1, 1973—Advertise for bids for purchase and/or construction of control system or purchase of requisite material for process modification sufficient to control hydrocarbon emissions from the source.

(*b*) December 15, 1973—Award contracts or issued order for purchase and/or construction of control system or purchase of requisite material for process modification sufficient to control hydrocarbon emissions from the source.

(*c*) April 15, 1974—Initiate onsite construction or installation of control system or process modification.

(*d*) November 1, 1974—Complete onsite construction or installation of control system or process modification.

(*e*) January 1, 1975—Achieve final compliance with Wisconsin Air Pollution Control Regulation NR 154.13.

(iii) Any owner or operator of a stationary source subject to paragraph (c)(2)(i) of this section, who elects to comply with the requirements of Wisconsin Air Pollution Control Regulation NR 154.13 by switching to an exempt solvent, shall take the following actions with respect to the source no later than the dates specified.

(*a*) April 1, 1974—Begin testing exempt solvents.

(*b*) June 1, 1974—Issue purchase orders for exempt solvents.

(*c*) December 1, 1974—Convert to complete use of exempt solvent.

(*d*) January 1, 1975—Achieve full compliance with Wisconsin Air Pollution Control Regulation NR 154.13.

(iv) Any owner or operator subject to a compliance schedule above shall certify to the Administrator, within five days after the deadline for each increment of progress in that schedule, whether or not the increment has been met.

(3) (i) None of the above paragraphs shall apply to a source which is presently in compliance with applicable regulations and which has certified such compliance to the Administrator by October 1, 1973. The Administrator may request whatever supporting information he considers necessary for proper certification.

(ii) Any compliance schedule adopted by the State and approved by the Administrator shall satisfy the requirements of this paragraph for the affected source.

(iii) Any owner or operator subject to a compliance schedule in this paragraph may submit to the Administrator no later than October 1, 1973, a proposed alternative compliance schedule. No such compliance schedule may provide for final compliance after the final compliance date in the applicable compliance schedule of this paragraph. If promulgated by the Administrator, such schedule shall satisfy the requirements of this paragraph for the affected source.

(4) Nothing in this paragraph shall preclude the Administrator from promulgating a separate schedule for any source to which the application of the compliance schedule in paragraph (c)(2) of this section fails to satisfy the requirements of §§51.261 and 51.262(a) of this chapter.

(d) [Reserved]

(e) The compliance schedule for the source identified below is disapproved as not meeting the requirements of subpart N of this chapter. All regulations cited are air pollution control regulations of the State, unless otherwise noted.

Source	Location	Regulation involved	Date schedule adopted
DOUGLAS COUNTY			
M&O Elevators Inc. (c) Units 12–17	Superior	NR154.11(4)(b)	Sept. 25, 1973.
MARATHON COUNTY			
Mosinee Paper Co	Mosinee	NR154.11(4), (5)	May 19, 1973.

[38 FR 16170, June 20, 1973, as amended at 38 FR 22752, Aug. 23, 1973; 38 FR 24832, Sept. 7, 1973; 39 FR 28159, Aug. 5, 1974; 39 FR 32608, Sept. 10, 1974; 43 FR 53440, Nov. 16, 1978; 51 FR 40675, 40676, 40677, Nov. 7, 1986; 54 FR 25258, June 14, 1989]

§§52.2579—52.2580 [Reserved]

§52.2581 Significant deterioration of air quality.

(a) The requirements of sections 160 through 165 of the Clean Air Act are not met, since the plan does not include approvable procedures for preventing the significant deterioration of air quality.

(b) Regulations for preventing significant deterioration of air quality. The provisions of §52.21(b) through (w) are hereby incorporated and made a part of the applicable state plan for the State of Wisconsin.

(c) All applications and other information required pursuant to §52.21 from sources in the State of Wisconsin shall be submitted to the Secretary of Wisconsin Department of Natural Resources, P.O. Box 7921, Madison, Wisconsin 53707 instead of the EPA Region V office.

[45 FR 52741, Aug. 7, 1980, and 46 FR 9585, Jan. 29, 1981]

§§52.2582—52.2583 [Reserved]

§52.2584 Control strategy; Particulate matter.

(a) Part D—Disapproval—USEPA disapproves Regulation NR 154.11(7)(b) of Wisconsin Administrative Code (RACT Requirements for Coking Operations), which is part of the control strategy to attain and maintain the standards for particulate matter, because it does not contain an enforceable RACT-level numerical visible emission limitation for charging operations.

(b) Approval—On April 30, 1988 and March 30, 1990, the State of Wisconsin submitted committal SIPs for particulate matter with an aerodynamic diameter equal to or less than 10 micrometers (PM_{10}) for the Group II areas within the Cities of DePere, Madison, Milwaukee, Superior, and Waukesha. This committal SIP meets all of the requirements identified in the July 1, 1987, promulgation of the SIP requirements for PM_{10}.

[48 FR 9862, Mar. 9, 1983, as amended at 55 FR 33120, Aug. 14, 1990]

§52.2585 Control strategy: Ozone.

(a) Disapproval—On November 6, 1986, the Wisconsin Department of Natural Resources submitted as a proposed revision to the State's ozone State Implementation Plan a site-specific reasonably available control technology determination for a miscellaneous metal parts and products dip coating line. This line is located at the Gehl facility in Washington County, Wisconsin. In a May 31, 1988 (53 FR 19806), notice of proposed rulemaking, United States Environmental Protection Agency proposed to disapprove this site-specific revision to the Wisconsin State Implementation Plan for ozone.

(b) Disapproval—On August 22, 1986, the Wisconsin Department of Natural Resources submitted a proposed revision to its ozone State Implementation Plan consisting of a site-specific reasonably available control technology determination for two miscellaneous metal parts and products spray coatings lines. These operations are located at the General Electric Company, Medical Systems facility in Milwaukee, Wisconsin, an area which has been designated as nonattainment for ozone, pursuant to section 107 of the Clean Air Act and 40 Code of Federal Regulations, part 81, §81.350.

(c) [Reserved]

(d) Approval—On November 15, 1992, the Wisconsin Department of Natural Resources submitted a revision to the ozone State Implementation Plan. The submittal pertained to the development of a process for assessing conformity of any federally-funded transportation and other federally funded projects in the nonattainment area.

(e) Approval—On January 15, 1993, the Wisconsin Department of Natural Resources submitted a revision to the ozone State Implementation Plan for the 1990 base year inventory. The inventory was submitted by the State of Wisconsin to satisfy Federal requirements under section 182(a)(1) of the Clean Air Act as amended in 1990 (the Act), as a revision to the ozone State Implementation Plan (SIP) for all areas in Wisconsin designated nonattainment, classified marginal to extreme. These areas include counties of Walworth, Door, Kewaunee, Manitowoc, Sheboygan, and the six county Milwaukee area (counties of Washington, Ozaukee, Waukesha, Milwaukee, Racine, and Kenosha).

(f) Approval—The Administrator approves the incorporation of the photochemical assessment ambient monitoring system submitted by Wisconsin on November 15, 1993, into the Wisconsin State Implementation Plan. This submittal satisfies 40 CFR 58.20(f) which requires the State to provide for the establishment and maintenance of photochemical assessment monitoring stations (PAMS).

(g) Approval—On November 15, 1993, the Wisconsin Department of Natural Resources submitted a revision to the ozone State Implementation Plan. The submittal pertained to a plan for forecasting VMT in the severe ozone nonattainment area of southeastern Wisconsin and demonstrated that Transportation Control Measures would not be necessary to offset growth in emissions.

(h) Approval—On November 15, 1993, the Wisconsin Department of Natural Resources submitted a revision to the ozone State Implementation Plan. The submittal pertained to a plan for forecasting VMT in the severe ozone nonattainment area of southeastern Wisconsin and demonstrated that Transportation Control Measures would not be necessary to meet the 15 percent Rate-of-Progress milestone.

(i) Approval—EPA is approving the section 182(f) oxides of nitrogen (NO_X) reasonably available control technology (RACT), new source review (NSR), vehicle inspection/maintenance (I/M), and general conformity exemptions for the moderate and above ozone nonattainment areas within Wisconsin as requested by the States of Illinois, Indiana, Michigan, and Wisconsin in a July 13, 1994 submittal. This approval also covers the exemption of transportation and general conformity requirements of section 176(c) for the Door and Walworth marginal ozone nonattainment areas. Approval of these exemptions is contingent on the results of the final ozone attainment demonstration expected to be submitted in mid-1997. The approval will be modified if the final attainment demonstration demonstrates that NO_X emission controls are needed in any of the nonattainment areas to attain the ozone standard in the Lake Michigan Ozone Study modeling domain.

[54 FR 29557, July 13, 1989, as amended at 54 FR 34517, Aug. 21, 1989; 58 FR 34226, 34227, June 24, 1993; 59 FR 12853, Mar. 18, 1994; 59 FR 30705, June 15, 1994; 59 FR 42766, Aug. 19, 1994; 60 FR 22285, May 5, 1995; 60 FR 47089, Sept. 11, 1995; 61 FR 2438, Jan. 26, 1996]

§ 52.2586 Small business stationary source technical and environmental compliance assistance program.

The Wisconsin small business stationary source technical and environmental compliance assistance program submitted on November 18, 1992 and January 21, 1993, satisfies the requirements of Section 507 of the Clean Air Act.

[59 FR 40826, Aug. 10, 1994]

Subpart ZZ—Wyoming

§ 52.2620 Identification of plan.

(a) Title of plan: ''Implementation Plan for Air Quality Control, State of Wyoming.''

(b) The plan was officially submitted on January 26, 1972.

(c) The plan revisions listed below were submitted on the dates specified.

(1) Compliance schedule information in three plants submitted March 28,

1972, by the Department of Health and Social Services (DHSS). (Non-regulatory.)

(2) Procedural clarification to emergency episodes plan submitted May 3, 1972, by DHSS.

(3) Particulate compliance schedules submitted February 9, 1973, by DHSS.

(4) Emergency episode plan submitted February 27, 1973, by DHSS. (Non-regulatory).

(5) Compliance schedules submitted on March 1, 1973, by DHSS.

(6) Revision of Wyoming's Standards and Regulations (Chapter I, Section 1–20) submitted April 18, 1973, by DHSS.

(7) Revision of particulate control strategy to require compliance with particulate standards not later than January 31, 1974, except where approved by EPA and compliance schedule portions of the plan submitted May 29, 1973, by DHSS.

(8) Compliance schedule revisions, legal authority additions, update of Wyoming's Air Quality Standards and Regulations, non-regulatory source surveillance and new source review procedures submitted on August 7, 1974, by the Governor.

(9) Legal authority additions and compliance schedule revisions submitted on February 19, 1976, by the Governor.

(10) Requirements for continuous opacity monitoring by all fossil fuel fired steam generators with heat inputs in excess of 250 million Btu per hour and other miscellaneous revisions to the State regulations as submitted by the Air Quality Division (AQD) on May 9, 1978.

(11) Provisions to meet the requirements of Parts C and D and sections 110, 126, and 127 of the Clean Air Act, as amended in 1977 were submitted on January 26, 1979.

(12) A revision to Section 14 of the Wyoming Air Quality Standards and Regulations was submitted on July 18, 1980, and October 27, 1980.

(13) On August 26, 1981 and August 27, 1981, Wyoming submitted revisions to the requirements for Prevention of Significant Deterioration, the Air Quality Monitoring Plan, revisions to the Emergency Episode Contingency Plan, and revisions to stationary source permitting regulations.

(14) Revisions to the new source permit requirements in Sections 21 and 24 of the Wyoming regulations were submitted on April 30, 1981, and February 8, 1982.

(15) On August 30, 1984, the State of Wyoming submitted a plan revision for lead.

(16) Revisions to the new source permit requirements in sections 21 and 24 of the Wyoming regulation for visibility protection were submitted on April 12, 1985.

(i) Incorporation by reference.

(A) Letter from Randolph Wood, Administrator, Wyoming Air Quality Division, dated April 12, 1985, submitting the Wyoming Visibility SIP and Regulations.

(B)(*1*) Wyoming Air Quality Standards and Regulations (WAQSR), Section 21.n. (1) and (2) adopted on January 22, 1985.

(*2*) WAQSR, Section 24.b.(1)(f) adopted on January 22, 1985.

(*3*) WAQSR, Section 24.b.(6) (a) and (b) revised and adopted on January 22, 1985.

(17) A revision to the SIP was submitted by the Administrator of the Wyoming Air Quality Division on September 6, 1988, for visibility general plan requirements, monitoring, and long-term strategies.

(i) Incorporation by reference.

(A) Letter dated September 6, 1988, Charles A. Collins, Administrator of the Wyoming Air Quality Division, submitting a SIP revision for visibility protection.

(B) The SIP revision for visibility protection, ''Section 28 *Visibility*'' of the Wyoming Air Quality Standards and Regulations, and ''Wyoming State Implementation Plan for Class I Visibility Protection'' was adopted by the Wyoming Environmental Quality Council on March 23, 1988, and became effective on May 10, 1988.

(18) On September 6, 1988, the Administrator of the Air Quality Division, as the Governor's designee, submitted a plan revising the stack height regulations, Wyoming Air Quality Standards and Regulations (WAQSR) section 21(d).

(i) Incorporation by reference.

(A) Revisions to the Wyoming Air Quality Standards and Regulation section 21(d), stack heights, were adopted and effective on May 10, 1988.

(19) In a letter dated August 5, 1986, the Administrator of the Air Quality Division of Wyoming, submitted the stack height demonstration analysis. EPA is approving the demonstration analysis for all of the stacks.

(i) Incorporation by reference. (A) Stack height demonstration analysis submitted by the State in a letter dated August 5, 1986.

(20) A revision to the SIP was submitted by the Administrator of the Wyoming Air Quality Division on March 14, 1989, to address the Group III PM–10 SIP requirements and Group II PM–10 SIP requirements for Lander, Wyoming.

(i) Incorporation by reference.

(A) Amendments to the Wyoming Air Quality Standards and Regulations: section 2 (Definitions) (a)(xxx), section 3 (Ambient Standards for Particulate Matter) (a), section 20 (Air Pollution Emergency Episodes) (b)(ii), section 21 (Permit Requirements for Construction, Modification, and Operation) (c)(ii) and section 24 (Prevention of Significant Deterioration) (a)(xx)(A), (b)(i)(E)(VI)(1.)(c.)(f.)(h.) & (1.), (b)(iii), (b)(iv), (b)(viii), and (b)(xii)(D)(E)(F) & (G), effective February 13, 1989.

(B) March 14, 1989 letter from Charles A. Collins, Administrator of the Wyoming Air Quality Division to James J. Scherer, EPA Region VIII Regional Administrator, identifying the effective date of the above regulation amendments.

(21) On November 20, 1990, the Governor of Wyoming submitted revisions to the plan. The revisions include amendments to the prevention of significant deterioration of air quality (PSD) regulations to incorporate the nitrogen dioxide (NO_2) increments, revisions to the new source review requirements and PSD regulations to make them federally enforceable, and revisions to the PSD regulations to allow establishment of multiple baseline areas which may have different baseline dates and different baseline concentrations.

(i) *Incorporation by reference.* (A) Revisions to the Wyoming Air Quality Standards and Regulations, Section 2, *Definitions*, Section 21, *Permit Requirements for Construction, Modification, and Operation*, and Section 24, *Prevention of Significant Deterioration*, effective October 30, 1990.

(ii) *Additional material.* (A) November 5, 1990, letter from Douglas Skie, EPA, to Charles A. Collins, Administrator, Air Quality Division, Wyoming Department of Environmental Quality.

(22) On September 6, 1988, the Governor of Wyoming submitted revisions to Section 3 of the Wyoming Air Quality Standards and Regulations, adding subsection (d) which defines ''ambient air'' for surface coal mines located in Wyoming's Powder River Basin.

(i) Incorporation by reference.

(A) Revisions to Section 3(d) of the Wyoming Air Quality Standards and Regulations, effective June 5, 1987.

(ii) Additional material.

(A) Memorandum of Agreement signed on December 22, 1993 by Dennis Hemmer, Director, Department of Environmental Quality, State of Wyoming, and on January 24, 1994 by Patricia D. Hull, Director, Air, Radiation and Toxics Division, EPA Region VIII.

(23) On November 1, 1993, the Governor of Wyoming submitted a plan for the establishment and implementation of a Small Business Assistance Program to be incorporated into the Wyoming State Implementation Plan as required by section 507 of the Clean air Act.

(i) Incorporation by reference.

(A) November 1, 1993, letter from the Governor of Wyoming submitting a Small Business Assistance Program plan to EPA.

(B) The State of Wyoming plan for the establishment and implementation of a Small Business Assistance Program, adopted September 16, 1993, by the Wyoming Environmental Quality Council.

(24) On August 28, 1989, the Governor of Wyoming submitted revisions to the Wyoming State implementation plan (SIP) for Sheridan, Wyoming. In addition to the original August 28 submittal, eight submittals containing information in response to EPA requests and to the new Clean Air Act Amendments were submitted. The August 28, 1989, submittal, in combination with

the eight subsequent submittals, satisfy those moderate PM_{10} nonattainment SIP requirements due on November 15, 1991. Included in the August 28, 1989, submittal were PM_{10} contingency measures for Sheridan to satisfy the requirements of section 172(c)(9) of the Act that were due by November 15, 1993.

(i) Incorporation by reference.

(A) ''The City of Sheridan, Air Quality Maintenance Plan,'' including the Street Winter Maintenance Plan and the contingency plan calling for the use of deicing chemicals on downtown streets, adopted on February 21, 1989.

(ii) Additional material.

(A) Letter dated November 21, 1989, from the Wyoming Department of Environmental Quality to EPA which includes a memorandum dated November 15, 1989 from the Wyoming Attorney General's Office to the Wyoming Department of Environmental Quality; the memorandum includes Wyoming Statute 35–11–201.

(25) On November 12, 1993, the Governor of Wyoming submitted revisions to the Wyoming State Implementation Plan (SIP). Specifically, the State submitted revisions to the Wyoming Air Quality Standards and Regulations (WAQSR), section 21 ''Permit requirements for construction, modification and operation.'' Among other things, these revisions were made to address the non-attainment New Source Review (NSR) provisions of part D of the Act for PM_{10} nonattainment areas, which were due to EPA on June 30, 1992.

(i) Incorporation by reference.

(A) The following subsections of section 21 of the Wyoming Air Quality Standards and Regulations ''Permit requirements for construction, modification and operation,'' adopted on September 16, 1993 and effective October 26, 1993: subsections (a)(ii), (a)(iii), (a)(v), (c)(ii)(B), (k)(vii) and (o).

(ii) Additional material.

(A) Letter from Mary A. Throne, Assistant Attorney General, to the Governor of Wyoming, dated October 1, 1993, documenting the necessary legal authority under state law to adopt and implement the revised regulation.

(26) On March 14, 1995, the Governor of Wyoming submitted revisions to the prevention of significant deterioration permitting regulations in Section 24 of the Wyoming Air Quality Standards to incorporate changes in the Federal PSD permitting regulations for utility pollution control projects, PM–10 increments, and to make other minor changes.

(i) Incorporation by reference.

(A) Revisions to Section 24 of the Wyoming Air Quality Standards, subsections (a)(ix)(B), (a)(x)(H)–(K), (a)(xii)(D), (a)(xv), (a)(xix)(D) and (E), (a)(xxviii)–(xxxv), (b)(i)(A)(I), (b)(i)(E)(VI)(1), (b)(viii), and (b)(xii)(I), effective 2/13/95.

[37 FR 10903, May 31, 1972]

EDITORIAL NOTE: For FEDERAL REGISTER citations affecting § 52.2620, see the List of CFR Sections Affected in the Finding Aids section of this volume.

§ 52.2621 Classification of regions.

The Wyoming plan was evaluated on the basis of the following classifications:

Air quality control region	Pollutant				
	Particulate matter	Sulfur oxides	Nitrogen dioxide	Carbon monoxide	Photochemical oxidants (hydrocarbons)
Cheyenne Intrastate	II	III	III	III	III
Casper Intrastate	II	III	III	III	III
Wyoming Intrastate	III	III	III	III	III

[37 FR 10904, May 31, 1972]

§ 52.2622 Approval status.

With the exceptions set forth in this subpart, the Administrator approves Wyoming's plans as meeting the requirements of section 110 of the Clean Air Act, as amended in 1977. Furthermore, the Administrator finds that the plans satisfy the requirements of Part D, Title I, of the Clean Air Act.

[44 FR 38475, July 2, 1979]

§§ 52.2623—52.2624 [Reserved]

§ 52.2625 Compliance schedules.

(a) The compliance schedules for the sources identified below are approved as meeting the requirements of Subpart N of this chapter. All regulations cited are found in the ''Wyoming Air Quality Standards and Regulations, 1975.''

WYOMING

Source	Location	Regulations involved	Date of adoption	Effective date	Final compliance date
Pacific Power & Light	Glenrock	14 (b), (e), (h)	Feb. 26, 1973	Immediately	Sept. 1, 1976.
Montana-Dakota Utilities	Sheridan	14 (b), (e), (h)	do	do	Dec. 31, 1976.
Utah Power & Light	Kemmerer	14 (b), (e), (h)	do	do	Do.
Black Hills Power & Light	Wyodak	14 (b), (e), (h)	do	do	May 1, 1978.
Do	Osage	14 (b), (e)	do	do	May 15, 1977.
American Oil	Casper	14 (b), (e), (h)	Jan. 26, 1973	do	Jan. 31, 1974.
Basins Engineering	Wheatland	14 (b), (e), (f), (g).	June 6, 1974	do	Apr. 5, 1974.
Stauffer Chemical Co	Green River	14 (b), (e), (f), (g).	do	do	Oct. 31, 1973.
Do	Leefe	14 (b), (e), (f), (g).	Feb. 26, 1973	do	Nov. 1, 1976.
Barold Division of National Lead	Osage	14 (b), (e), (f), (g).	Jan. 26, 1973	do	Dec. 31, 1975.
Do	Colony	14 (b), (e), (f), (g).	June 6, 1973	do	Mar. 1, 1974.
Holly Sugar	Torrington	14 (b), (e), (f), (g).	do	do	Oct. 31, 1976.
Do	Worland	14 (b), (d), (f), (g).	do	do	Do.
Reeves Concrete	Gillette	14 (b), (e), (f), (g).	Jan. 26, 1973	do	Dec. 1, 1973.
Do	Sheridan	14 (b), (e), (f), (g).	do	do	Do.
Do	Buffalo	14 (b), (e), (f), (g).	do	do	Do.
American Colloid	Lovell	14 (b), (e), (f), (g).	June 6, 1974	do	Apr, 30, 1974.
Star Valley Swiss Cheese	Thayne	14 (b), (e), (h)	Jan. 26, 1973	do	Dec. 31, 1973.
Sheridan Commercial	Sheridan	14 (b), (e), (f), (g).	do	do	Do.
Federal Bentonite	Upton	14 (b), (e), (f), (g).	June 6, 1973	do	June 30, 1974.
Do	Lovell	14 (b), (e), (f), (g).	do	do	Do.
Wyo-Ben Products	Greybull	14 (b), (e), (f), (g).	Jan. 26, 1973	do	Jan. 30, 1974.
Do	Lovell	14 (b), (e), (f), (g).	June 6, 1974	do	Do.
FMC	Kemmerer	14 (e), (f), (g), (i).	Jan. 26, 1973	do	Dec. 31, 1976.
Do	Green River	14 (b), (e), (f), (g).	June 6, 1974	do	Oct. 31, 1974.
Gunn-Quealy Coal	Rock Springs	14 (b), (e), (f), (g).	do	do	Mar. 31, 1974.
Allied Chemical	Green River	14 (b), (e), (f), (g).	do	do	Aug. 1, 1976.
IMC Corp	Colony	14 (b), (e), (f), (g).	do	do	Oct. 31, 1974.
Wyodak Resources Develop	Gillette	14 (b), (e), (f), (g).	do	do	Feb. 28, 1974.
Church and Dwight	Green River	14 (b), (e), (f), (g).	do	do	Nov. 1, 1973.
Wycon Chemical	Cheyenne	14 (b), (e), (f), (g).	Sept. 11, 1975	do	June 1, 1976.

WYOMING—Continued

Source	Location	Regulations involved	Date of adoption	Effective date	Final compliance date
Dresser Minerals	Greybull	14 (b), (e), (f), (g).	....do	....do	Feb. 15, 1976.
Town of Byron	Byron	13	Jan. 26, 1973	....do	July 1, 1974.
Town of Chugwater	Chugwater	13	....do	....do	Do.
Town of Cowley	Cowley	13	....do	....do	Do.
Town of Lovell	Lovell	13	May 24, 1973	....do	Do.
Big Horn County	Big Horn County.	13	Jan. 26, 1973	....do	Do.

[41 FR 36653, Aug. 31, 1976, as amended at 51 FR 40676, Nov. 7, 1986]

§§52.2626—52.2629 [Reserved]

§52.2630 Prevention of significant deterioration of air quality.

(a) The Wyoming plan, as submitted, is approved as meeting the requirements of Part C of the Clean Air Act except that designation of the Savage Run Wilderness Area, as established in Pub. L. 95–237, from Class II to Class I is disapproved.

(b) Regulation for preventing significant deterioration of air quality. The Wyoming plan, as submitted does not apply to certain sources in the State. Therefore, the provisions of §52.21(b) through (v) are hereby incorporated by reference and made a part of the State Implementation Plan for the State of Wyoming and are applicable to the following proposed major stationary sources or major modifications:

(1) Sources proposing to construct on Indian Reservations in Wyoming; and

(2) Sources that received an air quality permit from the Wyoming State Department of Environmental Quality prior to September 6, 1979.

(c) The State of Wyoming has clarified the generalized language contained in section 24 of the Wyoming Air Quality Standards and Regulations on the use of the ''Guidelines for Air Quality Models.'' In a letter to Douglas M. Skie, EPA, dated May 18, 1989, Charles A. Collins, Administrator of the Air Quality Divisions stated:

* * * The Division, will, as a matter of practice, utilize the ''Guideline on Air Quality Models'' as revised, including Supplement A, in all PSD permit application reviews. The Division will utilize any future revisions to the Guideline in PSD permitting reviews as revisions become effective.

[44 FR 51979, Sept. 6, 1979, as amended at 54 FR 27881, July 3, 1989]

§52.2631 [Reserved]

§52.2632 Visibility protection. [Reserved]

§52.2633 Stack height regulations.

In a letter dated December 9, 1988, to Douglas M. Skie, EPA, from Charles A. Collins, Administrator of The Air Quality Division, the State committed to conduct stack height evaluations in accordance with the ''Guideline for Determination of Good Engineering Practice Stack Height (Technical Support Document for the Stack Height Regulations)'', EPA 450/4–80–023R, June 1985.

[54 FR 11188, Mar. 17, 1989]

Subpart AAA—Guam

§52.2670 Identification of plan.

(a) Title of Plan: ''Implementation Plan for Compliance With the Ambient Air Quality Standards for the Territory of Guam.''

(b) The plan was officially submitted on January 25, 1972.

(c) The plan revision listed below was submitted on the date specified.

(1) Revised implementation plan submitted on August 14, 1973, by the Governor.

Section I—Public hearing.
Section II—Introduction.
Section III—Legal authority (narrative).
Section IV—Ambient air quality standards and air pollution control regulations (narrative).
Section V—Emissions inventory.
Section VI—Air quality data.

Section VIII (B and C)—Control strategies.
Section IX—Complex sources (narrative).
Section X—Air quality surveillance network (narrative).
Section XI—Source surveillance system (narrative).
Section XIII—Compliance schedule.
Section XV—Resources.
Section XVI—Intergovernmental cooperation (narrative).
Appendix A—Notice and minutes of public hearing.
Appendix C—Pub. L. 11–191 (enacted on December 7, 1972).
Appendix E (Regulations):
Chapter 1, Definitions: 1.1–1.8, 1.10–1.14, 1.16, 1.19, and 1.21–1.32.
Chapter 2, Ambient Air Quality Standards: 2.1 and 2.2.
Chapter 3, Permits (for complex sources only): 3.1–3.13.
Chapter 4, Monitoring, Records, and Reporting: 4.2, and 4.4.
Chapter 5, Sampling and Testing: 5.3.
Chapter 6, Control of Open Burning: 6.2(g)(1–3).
Chapter 7, Control of Particulate Emission from Process Industries: 7.1–7.4 (7.1 and 7.6 deleted without replacement).
Chapter 8, Control of Fugitive Dust: 8.1–8.9.
Chapter 10, Control of Visible Emissions: 10.1(b) and the deletion of 10.1(c).
Chapter 14, Motor Vehicle Pollution Controls: 14.1–14.7.
Chapter 15, Appeal Procedures, Circumvention, Severability, and Effective Date: 15.1–15.4
Appendix F—Summary of air quality data.
Appendix G—Steam powerplant parameters.
Appendix H—Diffusion model computer printout.
Appendix J—Minutes and letters of public hearing on compliance schedules.
Appendix K—Emissions inventory data.

(2) Amendments to the Guam Air Pollution Control Standards and Regulation submitted on October 12, 1979 by the Governor's designee.

(i) Chapter 13—*Control of Sulfur Dioxide Emission*, 13.3, 13.4.

(ii) Deleted without replacement Rule 13.3 (submitted January 25, 1972).

(iii) Chapters 1 (except 1.18 and 1.19), 4, 10, 12 and 14; Rules 3.1–3.9, 5.3, 6.2, 7.1, 7.4, 7.5, 8.3–8.7, 13.1, 13.2 and 18.1–18.4; and deletion of Rules 3.12, 3.17 and 12.3.

(3) Amendments to the Guam Air Pollution Control Standards and Regulations submitted on April 1, 1980 by the Governor's designee.

(i) Addendum to 13.1—Compliance Order for the Guam Power Authority's Power Barge ''Inductance''.

(4) Amendments to the Guam Air Pollution Control Standards and Regulations submitted on January 6, 1982 by the Governor's designee.

(i) Chapter 17—Appeals Procedures, Circumvention, Severability, and Effective Date.

(5) Amendments to the Guam Air Pollution Control Standards and Regulations submitted on June 30, 1982 by the Governor's designee.

(i) ''Territory of Guam NAP for SO_2,'' consisting of the narrative or Control Strategy portion of the Piti NAP; Addendum B, ''Preliminary Results of SO_2 Dispersion Modeling;'' and ''Official Report of Public Hearing.'' The remaining portions of the addenda are for informational purposes only.

EDITORIAL NOTE: At 50 FR 2820, Jan. 22, 1985, the following paragraph (c)(5) was added to § 52.2670.

(5) Amendments to the Guam Air Pollution Standards and Regulations submitted on May 22, 1984.

(i) Section X. Air Quality Surveillance Network.

(6) The following amendments to the plan were submitted on November 24, 1982, by the Governor.

(i) Negative declaration indicating no Lead Sources in Guam.

[37 FR 10904, May 31, 1972, as amended at 41 FR 8968, Mar. 2, 1976; 43 FR 48639, Oct. 19, 1978; 43 FR 59067, Dec. 19, 1978; 45 FR 14560, Mar. 6, 1980; 46 FR 26303, May 12, 1981; 47 FR 43054, Sept. 30, 1982; 49 FR 20496, May 15, 1984; 50 FR 2820, Jan. 22, 1985; 50 FR 32698, Aug. 14, 1985]

§ 52.2671 Classification of regions.

The Guam plan was evaluated on the basis of the following classifications.

Air quality control region	Pollutant				
	Particulate matter	Sulfur oxides	Nitrogen dioxide	Carbon monoxide	Photochemical oxidants (hydrocarbons)
Guam	III	II	III	III	III

§ 52.2672 Approval status.

With the exceptions set forth in this subpart, the Administrator approves Guam's plan for the attainment and maintenance of the National Standards.

[46 FR 25303, May 6, 1981]

§§ 52.2673—52.2675 [Reserved]

§ 52.2676 Significant deterioration of air quality.

(a) The requirements of sections 160 through 165 of the Clean Air Act are not met, since the plan does not include approvable procedures for preventing the significant deterioration of air quality.

(b) Regulations for preventing significant deterioration of air quality. The provisions of § 52.21(b) through (w) are hereby incorporated and made a part of the applicable state plan for the State of Guam.

[43 FR 26410, June 19, 1978, as amended at 45 FR 52741, Aug. 7, 1980]

§ 52.2677 [Reserved]

§ 52.2678 Control strategy and regulations: Particulate matter.

(a) The requirements of § 51.110(a) and subpart G of this chapter are not met since the plan does not provide for the attainment and maintenance of the national standards.

(b) Chapter 6, Regulations 6.2(g)(1–3) of the ''Guam Air Pollution Control Standards and Regulations'' (control of open burning—agricultural crops) are disapproved since they do not provide criteria upon which to base the approval or denial of permit requests.

(c) The following rules are disapproved because they could allow an emissions increase, and a control strategy demonstration has not been submitted showing that any increased emissions would not interfere with the attainment or maintenance of the NAAQS.

(1) Rule 8.7, submitted on October 12, 1979.

[43 FR 59067, Dec. 19, 1978, as amended at 46 FR 26303, May 12, 1981; 51 FR 40676, Nov. 7, 1986]

§ 52.2679 Control strategy and regulations: Sulfur dioxide.

(a) Approvals of the following rules are limited to specific sources, since a control strategy demonstration has not been submitted showing that any increased emissions would not interfere with the attainment or maintenance of the NAAQS.

(1) Rule 13.1, submitted on October 12, 1979, for all applicable sources except the Tanguisson Power Plant.

(2) Rule 13.2, submitted on January 25, 1972, for the Tanguisson Power Plant.

(b) The following rules are disapproved because they are inconsistent with section 123(a)(2) of the Clean Air Act which requires continuous control strategies.

(1) Rule 13.2, submitted on October 12, 1979.

[46 FR 26304, May 6, 1981]

§§ 52.2680—52.2681 [Reserved]

§ 52.2682 Air quality surveillance.

(a) The requirements of § 51.27(a)(2) of this chapter as of December 19, 1978 (43 FR 59067), are not met. In addition, Chapter 1, Regulation 1.8 and Chapter 5, Regulation 5.3 of the ''Guam Air Pollution Control Standards and Regulations'' (buffer zones—air quality sampling) are not in conformance with the intent of the Clean Air Act and the definition of ''ambient air'' promulgated at § 50.1(e) of this chapter. Regulations 1.8 and 5.3 are disapproved because they could prohibit ambient air quality sampling at places of expected maximum concentration and/or at places where the public has access.

[43 FR 59067, Dec. 19, 1978, as amended at 51 FR 40677, Nov. 7, 1986]

§ 52.2683 [Reserved]

§ 52.2684 Source surveillance.

(a) The requirements of § 51.214 and Appendix P of this chapter are not met since the plan does not contain sufficient regulations pertaining to continuous in-stack monitoring.

[43 FR 59067, Dec. 19, 1978, as amended at 51 FR 40677, Nov. 7, 1986]

§ 52.2685 [Reserved]

§ 52.2686 Upset-breakdown reporting.

(a) Chapter 4, Regulation 4.4 of the ''Guam Air Pollution Control Standards and Regulations'' (reporting of upsets and breakdowns) is disapproved since criteria for further enforcement action are not specified, thus permitting the Guam Administratorunlimited discretion.

[43 FR 59067, Dec. 19, 1978]

Subpart BBB—Puerto Rico

§ 52.2720 Identification of plan.

(a) Title of plan: ''Clean Air for Puerto Rico.''

(b) The plan was submitted on January 31, 1972.

(c) The plan revisions listed below were submitted on the date specified.

(1) Compliance schedules submitted on April 5, 1973, by the Commonwealth of Puerto Rico Environmental Quality Board.

(2) Compliance schedules submitted on April 9, 1973, by the Commonwealth of Puerto Rico Environmental Quality Board.

(3) Compliance schedules submitted on April 17, 1973, by the Commonwealth of Puerto Rico Environmental Quality Board.

(4) Compliance schedules submitted on May 30, 1973, by the Commonwealth of Puerto Rico Environmental Quality Board.

(5) Compliance schedules submitted on June 18, 1973, by the Commonwealth of Puerto Rico Environmental Quality Board.

(6) Compliance schedules submitted on September 10, 1973, by the Commonwealth of Puerto Rico Environmental Quality Board.

(7) Compliance schedules submitted December 6, 1973, by the Commonwealth of Puerto Rico Environmental Quality Board.

(8) Information on procedures followed in adoption of compliance schedules submitted on February 1, 1974, by the Commonwealth of Puerto Rico Environmental Quality Board.

(9) Compliance schedules submitted February 7, 1974, by the Commonwealth

of Puerto Rico Environmental Quality Board.

(10) Compliance schedules submitted February 7, 1974, by the Commonwealth of Puerto Rico Environmental Quality Board.

(11) Information on procedures followed in adoption of compliance schedules submitted on February 12, 1974, by the Commonwealth of Puerto Rico Environmental Quality Board.

(12) Information on procedures followed in adoption of compliance schedules submitted on March 13, 1974, by the Puerto Rico Environmental Quality Board.

(13) Information on procedures followed in adoption of compliance schedules submitted on March 15, 1974, by the Puerto Rico Environmental Quality Board.

(14) Information on procedures followed in adoption of compliance schedules submitted on March 20, 1974, by the Puerto Rico Environmental Quality Board.

(15) AQMA designations were submitted on May 5, 1974, by the Governor of Puerto Rico.

(16) Compliance schedules submitted June 11, 1974, by the Commonwealth of Puerto Rico Environmental Quality Board.

(17) Compliance schedules submitted on September 6, 1974, by the Commonwealth of Puerto Rico Environmental Quality Board.

(18) Revised Article 6 (Control of Sulfur Compound Emissions) was submitted on January 3, 1975, by the Governor of Puerto Rico.

(19) Public hearing information regarding revised Article 6 was submitted on January 17, 1975, by the Executive Director of the Environmental Quality Board.

(20) Information regarding Guayanilla and Aguirre Air Basins was submitted on February 14, 1975, by the Environmental Quality Board.

(21) Emission limitation for one source in the Ponce Air Basin was submitted on March 26, 1976, by the Environmental Quality Board.

(22) Predicted SO_2 concentrations for Aguirre Air Basin was submitted on May 8, 1975, by the Environmental Quality Board.

(23) Additional information regarding revised Article 6 was submitted on May 15, 1975, by the Environmental Quality Board.

(24) Predicted SO_2 ambient concentrations for Barceloneta and Ensenada submitted on June 2, 1975, by the Environmental Quality Board.

(25) Predicted SO_2 ambient concentrations for Barceloneta and Ensenada submitted on January 8, 1976, by the Environmental Quality Board.

(26) A document entitled, ''Clean Air for Puerto Rico,'' submitted, pursuant to requirements of Part D of the Clean Air Act, on June 29, 1979 by the Governor of the Commonwealth of Puerto Rico.

(27) Supplementary submittals of SIP revision material from the Puerto Rico Environmental Quality Board, dated:

(i) October 30, 1979, containing policy statements of EQB with regard to: Its objective to attain both the primary and secondary particulate matter air quality standards by December 31, 1982, assurances with regard to meeting the requirements of reasonable further progress, verification of the detail of its annual reporting effort, clarification of the operation of its offset program and correction of the related inventory and graphical presentations.

(ii) July 24, 1980, providing a comprehensive set of adopted regulations, entitled ''Regulation for the Control of Atmospheric Pollution.''

(iii) August 6, 1980, providing a commitment to submit ''external offsets'' as SIP revisions.

(28) A submittal by the Puerto Rico Environmental Quality Board entitled, ''Revised Provisions for SIP Air Quality Monitoring Plan,'' April 1980.

(29) Revision submitted by the Puerto Rico Environmental Quality Board on April 26, 1982, as modified by a July 8, 1982 letter, which grants a visible emissions standard variance to ovens ''A'' and ''B'' of the Owens-Illinois, Inc. Vega Alta plant. This variance remains in effect until November 2, 1985.

(30) Revision submitted on March 3, 1981 by the Commonwealth of Puerto Rico's Environmental Quality Board which establishes fuel oil sulfur content limitations (known as ''sulfur assignments'') applicable to the 110 sources. On October 20, 1983, 78 of these

110 sources had their sulfur assignments approved by EPA.

(31) Revision submitted on May 30, 1984 by the Commonwealth of Puerto Rico's Environmental Quality Board which establishes fuel oil sulfur content limitations (known as ''sulfur assignments'') applicable to the Bristol Alpha Corporation.

(32) An Implementation Plan for attainment of the lead standard was submitted on September 28, 1984 by the Chairman of the Puerto Rico Environmental Quality Board. On December 12, 1984, the Chairman submitted a schedule for establishing a program to review new sources of lead.

(33) Revision submitted by the Puerto Rico Environmental Quality Board on September 6, 1983, which grants a visible emissions variance from Commonwealth Rule 403, ''Visible Emissions,'' from 20 percent to 45 percent for the crude unit and from 20 percent to 35 percent for the hot oil/final lube unit located at the Yabucoa Sun Oil Company's plant in Yabucoa.

(34) Revision submitted by the Puerto Rico Environmental Quality Board on December 31, 1986, which grants a visible emissions standard variance to Owen-Illinois, Inc. Vega Alta plant.

(i) Incorporation by reference. Resolution and notification announcing a Certificate of Renewal to Commonwealth of Puerto Rico Law 403 of the Regulation for Control of Atmospheric Pollution; adopted on July 9, 1986.

(ii) Additional material. Documents submitted on December 31, 1986 in support of the above resolution.

(35) A revision submitted on November 14, 1993 by the Chairman of the Puerto Rico Environmental Quality Board (EQB) for the Municipality of Guaynabo. The submittal was made to satisfy those moderate PM_{10} nonattainment area SIP requirements due for the Municipality of Guaynabo as outlined in the Clean Air Act of 1990.

(i) Incorporation by reference:

(A) Regulations:

(1) Amendments to Part I, Rule 102, ''Definitions,'' of the Puerto Rico Regulations for the Control of Atmospheric Pollution, effective April 2, 1994.

(2) Amendments to Part II, Rule 201, ''Location Approval,'' Rule 202, ''Air Quality Impact Analysis,'' and Rule 203, ''Permit to Construct a Source,'' of the Puerto Rico Regulations for the Control of Atmospheric Pollution, effective April 2, 1994.

(3) Amendments to Part IV, Rule 401, ''Generic Prohibitions,'' Rule 402, ''Open Burning,'' Rule 403, ''Visible Emissions,'' Rule 404, ''Fugitive Dust,'' and Rule 423, ''Limitations for the Guaynabo PM_{10} Nonattainment Area,'' of the Puerto Rico Regulations for the Control of Atmospheric Pollution, effective April 2, 1994.

(B) Memoranda of Understanding (MOU):

(1) MOU signed by the Chairman of EQB and the Executive Director of Puerto Rico Electrical Power Authority, San Juan plant, limiting the sulfur-in-fuel level, annual operation capacity, and requiring the submittal of monthly sampling reports of its fuel's sulfur content, effective January 31, 1994.

(2) MOU signed by the Chairman of EQB and the Secretary of Puerto Rico Department of Transportation and Public Works and the Executive Director of the Highway Authority to maintain and control the reconstruction of existing roads and the construction of new roads, effective July 2, 1993.

(3) MOU signed by the Chairman of EQB and the Mayor of the Municipality of Guaynabo to pave and maintain the streets, roads and parking areas located in the Municipality of Guaynabo, effective December 13, 1993.

(4) MOU signed by the Chairman of EQB and the Executive Director of the Puerto Rico Port Authority to pave and maintain the streets, roads, and parking areas that lead into the port area in Puerto Nuevo, Guaynabo and San Juan, effective October 14, 1993.

[37 FR 10905, May 31, 1972, as amended at 41 FR 8968, Mar. 2, 1976; 41 FR 51017, Nov. 19, 1976; 45 FR 72658, Nov. 3, 1980; 46 FR 23417, Apr. 27, 1981; 48 FR 28271, June 21, 1983; 48 FR 48669, Oct, 20, 1983; 49 FR 38103, Sept. 27, 1984; 50 FR 7338, Feb. 22, 1985; 50 Fr 15423, Apr. 18, 1985; 52 FR 38419, Oct. 16, 1987; 60 FR 28338, May 31, 1995]

§ 52.2721 Classification of regions.

The Puerto Rico plan was evaluated on the basis of the following classifications.

Air quality control region	Pollutant				
	Particulate matter	Sulfur oxides	Nitrogen dioxide	Carbon monoxide	Photochemical oxidants (hydrocarbons)
Puerto Rico	IA	IA	III	III	III

[37 FR 10905, May 31, 1972]

§ 52.2722 Approval status.

With the exceptions set forth in this subpart, the Administrator approves Puerto Rico's plans for the attainment and maintenance of national standards under section 110 of the Clean Air Act. Furthermore, the Administrator finds that the plan satisfies all requirements of Part D, Title I, of the Clean Air Act, as amended in 1977.

[45 FR 72658, Nov. 3, 1980]

§§ 52.2723—52.2724 [Reserved]

§ 52.2725 General requirements.

(a) The requirements of § 51.116(c) of this chapter are not met, since section 2.4 of the Puerto Rico Regulation for Control of Atmospheric Pollution could, in some circumstances, prohibit the disclosure of emission data to the public. Therefore, section 2.4 is disapproved.

(b) Regulation for public availability of emission data. (1) Any person who cannot obtain emission data from the Agency responsible for making emission data available to the public, as specified in the applicable plan, concerning emissions from any source subject to emission limitations which are part of the approved plan may request that the appropriate Regional Administrator obtain and make public such data. Within 30 days after receipt of any such written request, the Regional Administrator shall require the owner or operator of any such source to submit information within 30 days on the nature and amounts of emissions from such source and any other information as may be deemed necessary by the Regional Administrator to determine whether such source is in compliance with applicable emission limitations or other control measures that are part of the applicable plan.

(2) Commencing after the initial notification by the Regional Administrator pursuant to paragraph (b)(1) of this section, the owner or operator of the source shall maintain records of the nature and amounts of emissions from such source and any other information as may be deemed necessary by the Regional Administrator to determine whether such source is in compliance with applicable emission limitations or other control measures that are part of the plan. The information recorded shall be summarized and reported to the Regional Administrator, on forms furnished by the Regional Administrator, and shall be submitted within 45 days after the end of the reporting period. Reporting periods are January 1 to June 30 and July 1 to December 31.

(3) Information recorded by the owner or operator and copies of this summarizing report submitted to the Regional Administrator shall be retained by the owner or operator for 2 years after the date on which the pertinent report is submitted.

(4) Emission data obtained from owners or operators of stationary sources will be correlated with applicable emission limitations and other control measures that are part of the applicable plan and will be available at the appropriate regional office and at other locations in the state designated by the Regional Administrator.

[39 FR 34537, Sept. 26, 1974, as amended at 40 FR 55334, Nov. 28, 1975; 51 FR 40676, Nov. 7, 1986]

§ 52.2726 Legal authority.

(a) The requirements of § 51.230(f) of this chapter are not met, since Article 17 of Puerto Rico Act 9 could, in some circumstances, prohibit the disclosure

of emission data to the public. Therefore, Article 17 is disapproved.

[39 FR 34537, Sept. 26, 1974, as amended at 51 FR 40676, Nov. 7, 1986]

§§ 52.2727—52.2728 [Reserved]

§ 52.2729 Significant deterioration of air quality.

(a) The requirements of sections 160 through 165 of the Clean Air Act are not met, since the plan does not include approvable procedures for preventing the significant deterioration of air quality.

(b) Regulations for preventing significant deterioration of air quality. The provisions of § 52.21(b) through (w) are hereby incorporated and made a part of the applicable state plan for the State of Puerto Rico.

[43 FR 26410, June 19, 1978, as amended at 45 FR 52741, Aug. 7, 1980]

§ 52.2730 [Reserved]

§ 52.2731 Control strategy and regulations: Sulfur oxides.

(a) The requirements of subpart G of this chapter are not met since the Puerto Rico plan does not provide for attainment and maintenance of the national standards for sulfur oxides in the areas of Aguirre, Barceloneta, Trujillo Alto-Dorado and Ensenada.

(b) Article 6, as submitted to EPA on January 3, 1975, of the Puerto Rico Regulations for Control of Atmospheric Pollution, as it applies to those areas listed in paragraph (a) of this section is disapproved for the following facilities: Puerto RicoWater Resources Authority—Aguirre Complex, Abbott, Merck and Company, Bristol Meyers, Pfizer, Union Carbide, Upjohn, located in the Barceloneta air basin, and Central Guanica, located in the Aquada air basin. Accordingly, these sources, with the exception of the Puerto Rico Water Resources Authority—Aguirre Complex, are required to conform to the sulfur in fuel limitations contained in Article 6 of the Puerto Rico implementation plan as submitted to EPA on January 31, 1972.

(c) On and after the effective date of this paragraph, the maximum allowable sulfur in fuel limitation, by weight, for the Puerto Rico Water Resources Authority Aguirre complex shall be 2.5 percent.

(d) The requirements of section 110 of the Clean Air Act are not met since Article 6 of the Puerto Rico Regulation for Control of Atmospheric Pollution would permit the use of stack height increases in lieu of available methods for emission reduction. Therefore, Section H of Appendix A of Article 6 of the Puerto Rico Regulation for Control of Atmospheric Pollution is disapproved to the extent that it would permit increases in stack height in lieu of available methods of emission reduction.

[40 FR 42194, Sept. 11, 1975. Correctly designated at 41 FR 24586, June 17, 1976, and amended at 51 FR 40676, Nov. 7, 1986]

§ 52.2732 Small business technical and environmental compliance assistance program.

On November 16, 1992, the Puerto Rico Environmental Quality Board submitted a plan for the establishment and implementation of a Small Business Stationary Source Technical and Environmental Compliance Assistance Program for incorporation in the Puerto Rico state implementation plan. This plan meets the requirements of section 507 of the Clean Air Act, and Puerto Rico must implement the plan as approved by EPA.

[59 FR 34386, July 5, 1994]

Subpart CCC—Virgin Islands

SOURCE: 37 FR 10905, May 31, 1972, unless otherwise noted.

§ 52.2770 Identification of plan.

(a) Title of plan: ''Air Quality Implementation Plan for the U.S. Virgin Islands.''

(b) The plan was officially submitted on January 31, 1972.

(c) The plan revisions listed below were submitted on the dates specified.

(1) Procedures for making emission data available to the public submitted April 26, 1972, by the Division of Environmental Health, Virgin Islands Department of Health.

(2) Revision to construction permit regulation, Rule 12, section 206–26(a) of the Virgin Islands Rules and Regulations, submitted on August 17, 1972, by the Governor.

(3) Sections 206–30 (Review of new sources and modifications) and 206–31 (Review of new or modified indirect sources) were submitted on February 12, 1974, by the Governor of Virgin Islands.

(4) Additional information on sections 206–30 and 206–31 was submitted on April 10, 1975, by the Governor of the Virgin Islands.

(5) Exemption of the St. John Municipal Incinerator from the requirements of section 204–23, paragraph (c)(2) of the Virgin Islands Air Pollution Control Code submitted on July 9, 1975, by the Governor.

(6) Revised Section 204–26 (Sulfur Compounds Emissions Control) submitted on January 21, 1976 by the Governor of the Virgin Islands, as it applies to the islands of St. Thomas and St. John.

(7) Amended revised Section 204–26 submitted on June 3, 1976 by the Governor of the Virgin Islands, as it applies to the islands of St. Thomas and St. John.

(8) As it applies to the island of St. Croix, per an August 16, 1976 request from the Virgin Islands, revised 12 V.I.R. & R. 9:204–26 (Sulfur Compounds Emission Control) excluding subsection (a)(2), as submitted on January 21, 1976 by the Governor of the Virgin Islands.

(9) Revision submitted on August 29, 1977, by the Governor of the Virgin Islands which allows, under provisions of 12 V.I.R. & R. 9:204–26, the relaxation of the sulfur-in-fuel-oil limitation to 1.5 percent, by weight, for the Virgin Islands Water and Power Authority's Christiansted Power Plant.

(10) Revision submitted on February 9, 1980 by the Commissioner of the Department of Conservation and Cultural Affairs of the Government of the Virgin Islands of the United States which grants an ''administrative order'' under Title 12 V.I.C. section 211 and Title 12 V.I.R. & R. sections 204–26(d). This ''administrative order'' relaxes, until one year from the date of EPA approval, the sulfur-in-fuel-oil limitation to 1.5 percent, by weight, applicable to Martin Marietta Alumina and the Hess Oil Virgin Islands Corporation, both located in the Southern Industrial Complex on the Island of St. Croix.

(11) A document entitled ''Air Monitoring Plan,'' November 1979, submitted on February 23, 1981, by the Virgin Islands Department of Conservation and Cultural Affairs.

(12) Revision submitted on April 9, 1981 by the Commissioner of the Department of Conservation and Cultural Affairs of the Government of the Virgin Islands of the United States which grants an ''administrative order'' under Title 12 V.I.C. section 211 and Title 12 V.I.R. and R. sections 204–26(d). This ''administrative order'' relaxes, until one year from the date of EPA approval, the sulfur-in-fuel-oil limitation to 1.5 percent, by weight, applicable to Martin Marietta Alumina and the Hess Oil Virgin Islands Corporation, both located in the Southern Industrial Complex on the Island of St. Croix.

(13) Revision submitted on January 12, 1983 by the Commissioner of the Department of Conservation and Cultural Affairs of the Government of the Virgin Islands of the United States which grants an ''administrative order'' under Title 12 V.I.C. section 211 and Title 12 V.I.R. and R. sections 204–26(d). This ''administrative order'' relaxes, until one year from the date of EPA approval, the sulfur-in-fuel-oil limitation to 1.5 percent, by weight, applicable to Martin Marietta Alumina and the Hess Oil Virgin Islands Corporation, both located in the Southern Industrial Complex on the Island of Saint Croix.

(14) An Implementation Plan for attainment of the lead standard was submitted by the Governor of the U.S. Virgin Islands on November 16, 1984.

(15) Revision submitted on December 1, 1983 by the Virgin Islands Department of Environmental Conservation and Cultural Affairs which grants a variance establishing, for one year from February 26, 1985, a maximum sulfur-in-fuel-oil limitation of 1.5 percent, by weight, for the Hess Oil Virgin Islands Corporation and the Martin Marietta Aluminum Properties, Inc. facilities located on the Island of Saint Croix.

(16) Revision submitted on February 11, 1986 by the Virgin Islands Department of Environmental Conservation and Cultural Affairs which grants a

variance establishing, for one year from April 14, 1987, a maximum sulfur-in-fuel-oil limitation of 1.5 percent, by weight, for the Hess Oil Virgin Islands Corporation and the Martin Marietta Properties facilities located on the Island of St. Croix.

(17) Comprehensive revisions to Virgin Islands air pollution control regulations submitted on March 20, 1987, by the Virgin Islands Department of Planning and Natural Resources.

(i) Incorporation by reference:

(A) Revised sections 20 through 23, 25, 26, 28, 29, 33, 35 through 41, and 45 of subchapter 204, chapter 9, title 12 of the Virgin Islands Code, effective January 15, 1987.

(B) Revised sections 20 through 31 of subchapter 206, chapter 9, title 12 of the Virgin Islands Code, effective January 15, 1987.

(ii) Additional material:

(A) July 1988 Modeling Analysis for CEC Energy Co., Inc.

(B) July 11, 1989, letter from Ted Helfgott, Amerada Hess Corporation to Raymond Werner, U.S. Environmental Protection Agency, Region II, New York.

(C) December 28, 1992, Prevention of Significant Deterioration of Air Quality permit for Virgin Islands Water and Power Authority at St. Croix's north shore facility.

[37 FR 10905, May 31, 1972]

EDITORIAL NOTE: For FEDERAL REGISTER citations affecting § 52.2770, see the List of CFR Sections Affected in the Finding Aids section of this volume.

§ 52.2771 Classification of regions.

The U.S. Virgin Islands plan was evaluated on the basis of the following classifications:

Air quality control region	Pollutant				
	Particulate matter	Sulfur oxides	Nitrogen dioxide	Carbon monoxide	Photochemical oxidants (hydrocarbons)
U.S. Virgin Islands	IA	IA	III	III	III

§ 52.2772 Approval status.

With the exceptions set forth in this subpart, the Administrator approves the U.S. Virgin Islands plan for attainment and maintenance of the national standards.

§ 52.2773 EPA-approved Virgin Islands regulations.

Territory regulation	Effective date	EPA approval date	Comments
Section 204–20, ''Definitions''	1/15/87	4/18/94, 59 FR 18309	''Fugitive emissions'' will be defined as at 40 CFR 52.21(b)(20).
Section 204–21, ''Regulations to Control Open Burning''.	1/15/87	.....do	
Section 204–22, ''Regulations to Control Emission of Visible Air Contaminants''.	1/15/87	.....do.	
Section 204–23, ''Regulations Governing Emission of Particulate Matter''.	1/15/87	.....do.	
Section 204–24, ''Storage of Petroleum or Other Volatile Products''.	3/2/71	5/31/72, 37 FR 10905.	
Section 204–25, ''Fugitive Emissions''.	1/15/87	4/18/94, 59 FR 18309.	
Section 204–26, ''Sulfur Compounds Emission Control''.	1/15/87	.....do	Subsection 204–26(a)(2) is disapproved for three Martin Marietta (VI Alumina Corp), St. Croix, sources. For applicable limits, refer to PSD permit for the facility.

Territory regulation	Effective date	EPA approval date	Comments
Section 204–27, ''Air Pollution Nuisances Prohibited''.	3/2/71	5/31/72, 37 FR 10905.	
Section 204–28, ''Internal Combustion Engine Limits''.	1/15/87	4/18/94, 59 FR 18309.	
Section 204–29, ''Upset, Breakdown or Scheduled Maintenance''.	1/15/87	.....do.	
Section 204–30, ''Circumvention''	3/2/71	5/31/72, 37 FR 10905.	
Section 204–31, ''Duty to Report Discontinuance or Dismantlement''.	3/2/71	5/31/72, 37 FR 10905.	
Section 204–32, ''Variance Clauses''	3/2/71	5/31/72, 37 FR 10905.	
Section 204–33, ''Air Pollution Emergencies''.	1/15/87	4/18/94, 59 FR 18309.	
Section 204–35, ''Continuous Emission Monitoring''.	1/15/87	.....do.	
Section 204–36, ''Eligibility to Burn Waste Fuel A''.	1/15/87	.....do.	
Section 204–37, ''Eligibility to Burn Waste Fuels A and B''.	1/15/87	.....do.	
Section 204–38, ''Permit and/or Certificate Requirement for Waste Oil Facilities''.	1/15/87	.....do.	
Section 204–39, ''Sale or Use of Waste Fuels A and B''.	1/15/87	.....do	Reference to Table 1 in this subsection refers to Table 1 found in Section 204–20.
Section 204–40, ''Reports, Sampling and Analysis of Waste Fuels A and B''.	1/15/87	.....do	Variances adopted pursuant to subsection 204–40(e) become applicable only if approved by EPA as SIP revisions.
Section 204–41, ''Existing Air Contamination Sources for Waste Fuel''.	1/15/87	.....do.	
Section 204–45, ''Standards of Performance for Sulfur Recovery Units at Petroleum Refineries''.	1/15/87	.....do.	
Section 206–20, ''Permits Required''	1/15/87	.....do.	
Section 206–21, ''Transfer''	1/15/87	.....do.	
Section 206–22, ''Applications''	1/15/87	.....do.	
Section 206–23, ''Application and Permit Fees''.	1/15/87	.....do.	
Section 206–24, ''Cancellation of Applications''.	1/15/87	.....do.	
Section 206–25, ''Test Methods''	1/15/87	.....do	Variances adopted pursuant to subsection 206–25(c) become applicable only if approved by EPA as SIP revisions.
Section 206–26, ''Permits to Construct''.	1/15/87	.....do.	
Section 206–27, ''Permits to Operate''.	1/15/87	.....do.	
Section 206–28, ''Permit Modifications, Suspensions or Revocations and Denials''.	1/15/87	.....do.	
Section 206–29, ''Further Information''.	1/15/87	.....do.	
Section 206–30, ''Appeals''	1/15/87	.....do.	
Section 206–30, ''Review of New Sources and Modifications''.	10/11/73	8/10/75, 40 FR 42013	Subsection 206–30(f)(6) is disapproved since sources of minor significance are not identified in Section 206–30. A federally promulgated regulation (40 CFR 52.2775(g)), correcting this deficiency and a public participation deficiency, is applicable. Two separate subsections are numbered 206–30 and are listed here with their separate titles.
Section 206–31, ''Review of New or Modified Indirect Sources''.	10/11/73	8/10/75, 40 FR 42013.	

[59 FR 18309, Apr. 18, 1994]

§ 52.2774 [Reserved]

§ 52.2775 Review of new sources and modifications.

(a)—(d) [Reserved]

(e) The requirements of 40 CFR 51.18(h) are not met since section 206–30 of Chapter 9, Title 12 of the Virgin Islands' Code does not provide that information submitted by the owner or operator and the agency's analysis including its proposed approval/disapproval decision, be made available for public comment for a period of 30 days prior to final action.

(f) Subsection 206–30(f)(6) of section 206–30 of Chapter 9, Title 12 of the Virgin Islands' Code is disapproved since sources of minor significance are not identified in the regulation. Accordingly, all sources not listed in subsection 206–30 (f)(1) through (f)(5) will be subject to review in accordance with the requirements of section 206–30.

(g) Regulation for review of new sources and modifications.

(1) This requirement is applicable to any stationary source subject to review under section 206–30 of Chapter 9, Title 12 of the Virgin Islands' Code or 40 CFR 52.2775(f).

(2) Within 30 days after receipt of an application, the Commissioner of the Department of Conservation and Cultural Affairs, will notify the public, by prominent advertisement in the local news media, of the opportunity for public comment on the information submitted by the owner or operator.

(i) Such information, together with the Commissioner's analysis of the effect of the construction or modification on air quality including the Commissioner's proposed approval or disapproval, will be available in at least one location in the affected region.

(ii) Written public comments submitted within 30 days of the date such information is made available will be considered by the Commissioner in making his final decision on the application.

(iii) The Commissioner will make a final decision on the application within 30 days after the close of the public comment period. The Commissioner will notify the applicant in writing of his approval, conditional approval, or disapproval of the application and will set forth his reasons for conditional approval or disapproval.

(iv) A copy of the notice required by paragraph (h)(2) of this section shall also be sent to the Administrator through the appropriate regional office, and to all other State and local air pollution control agencies having jurisdiction in the region in which such new or modified installation will be located. The notice shall also be sent to any other agency in the region having responsibility for implementing the procedures required under this section.

[37 FR 10905, May 31, 1972, as amended at 40 FR 42013, Sept. 10, 1975]

§§ 52.2776—52.2778 [Reserved]

§ 52.2779 Significant deterioration of air quality.

(a) The requirements of sections 160 through 165 of the Clean Air Act are not met, since the plan does not include approvable procedures for preventing the significant deterioration of air quality.

(b) Regulations for preventing significant deterioration of air quality. The provisions of § 52.21(b) through (w) are hereby incorporated and made a part of the applicable state plan for the Virgin Islands.

[43 FR 26410, June 19, 1978, as amended at 45 FR 52741, Aug. 7, 1980]

§ 52.2780 Control strategy for sulfur oxides.

(a) The requirements of subpart G of this chapter are not met since there has not been a satisfactory demonstration that the Virgin Islands plan provides for the attainment and maintenance of the national ambient air quality standards for sulfur oxides on the island of St. Croix.

(b) The following parts of regulation 12 V.I.R. and R. 9:204–26, ''Sulfur Compounds Emission Control,'' as submitted to EPA on January 21, 1976 and as amended and resubmitted to EPA on June 3, 1976 are approved:

(1) The entire regulation as it applies to the islands of St. Thomas and St. John.

(2) The entire regulation as it applies to the Virgin Islands Water and Power

Authority's Christiansted Power Plant on the island of St. Croix.

(3) The entire regulation excluding subsection (a)(2) as it applies to the remaining sources on the island of St. Croix.

Subsection (a)(2) of the regulation is not approved as it applies to the remaining sources on St. Croix because of the inadequacy of the control strategy demonstration noted in paragraph (a) of this section. Accordingly, all sources on St. Croix with the exception of the Virgin Islands Water and Power Authority's Christiansted Power Plant are required to conform to the sulfur-in-fuel-oil limitations contained in 12 V.I.R. and R. 9:204–26 as originally submitted to EPA on January 31, 1972.

(c) Reference to ''Section (a)(2)'' in subsection (d) of 12 V.I.R. and R. 9:204–26, as submitted to EPA on January 21, 1976 and as amended and resubmitted to EPA on June 3, 1976, refers to the following approved limitations: (1) For the islands of St. Thomas and St. John, subsection (a)(2) of section 204–26 as submitted to EPA on January 21, 1976 and as amended and resubmitted to EPA on June 3, 1976; (2) for the island of St. Croix, subsection (a)(2) of section 204–26 as originally submitted to EPA on January 31, 1972 and approved by EPA on May 31, 1972.

[41 FR 28493, July 12, 1976, as amended at 41 FR 55531, Dec. 21, 1976; 43 FR 4016, Jan. 31, 1978; 51 FR 40676, Nov. 7, 1986]

§ 52.2781 Visibility protection.

(a) The requirements of section 169A of the Clean Air Act are not met, because the plan does not include approvable procedures for protection of visibility in mandatory Class I Federal areas.

(b) Regulation for visibility monitoring. The provisions of § 52.26 are hereby incorporated and made a part of the applicable plan for the Virgin Islands.

(c) *Long-term strategy*. The provisions of § 52.29 are hereby incorporated and made part of the applicable plan for the Virgin Islands.

[50 FR 28553, July 12, 1985, as amended at 52 FR 45137, Nov. 24, 1987]

§ 52.2782 Small business technical and environmental compliance assistance program.

On January 15, 1993, the Virgin Islands Department of Planning and Natural Resources submitted a plan to establish and implement a Small Business Stationary Source Technical and Environmental Compliance Assistance Program for incorporation in the Virgin Islands state implementation plan. This plan meets the requirements of section 507 of the Clean Air Act, and the U.S. Virgin Islands must implement the program as approved by EPA.

[59 FR 34386, July 5, 1994]

Subpart DDD—American Samoa

§ 52.2820 Identification of plan.

(a) Title of plan: ''The Territory of American Samoa Air Pollution Control Implementation Plan.''

(b) The plan was officially submitted on January 27, 1972.

(c) The plan revisions listed below were submitted on the dates specified.

(1) Revised legal authority submitted on March 9, 1972, by the Environmental Quality Commission.

(2) Letter indicating formal adoption of the implementation plan submitted on March 23, 1972, by the Environmental Quality Commission.

(3) Letter regarding comments on the plan and indicating intent to submit a revised plan submitted on April 28, 1972, by the Environmental Quality Commission.

(4) Formally adopted rules and regulations for the entire Territory submitted on June 8, 1972, by the Environmental Quality Commission.

(5) The following amendments to the plan were submitted on November 22, 1982, by the Governor.

(i) Negative declaration indicating no Lead sources in American Samoa.

[37 FR 10906, May 31, 1972, as amended at 41 FR 8969, Mar. 2, 1976; 50 FR 32698, Aug. 14, 1985]

§ 52.2821 Classification of regions.

The American Samoa plan was evaluated on the basis of the following classifications:

Air quality control region	Pollutant				
	Particulate matter	Sulfur oxides	Nitrogen dioxide	Carbon monoxide	Photochemical oxidants (hydrocarbons)
American Samoa	III	III	III	III	III

[37 FR 10906, May 31, 1972]

§ 52.2822 Approval status.

With the exceptions set forth in this subpart, the Administrator approves American Samoa's plan for the attainment and maintenance of the national standards.

[39 FR 8617, Mar. 6, 1974]

§ 52.2823 [Reserved]

§ 52.2824 Review of new sources and modifications.

(a) The requirements of subpart I of this chapter are not met since the Territory of American Samoa failed to submit a plan for review of new or modified indirect sources.

(b) Regulation for review of new or modified indirect sources: The provisions of § 52.22(b) are hereby incorporated by reference and made a part of the applicable implementation plan for the Territory of American Samoa.

[39 FR 8617, Mar. 6, 1974, as amended at 51 FR 40677, Nov. 7, 1986]

§§ 52.2825—52.2826 [Reserved]

§ 52.2827 Significant deterioration of air quality.

(a) The requirements of sections 160 through 165 of the Clean Air Act are not met, since the plan does not include approvable procedures for preventing the significant deterioration of air quality.

(b) Regulations for preventing significant deterioration of air quality. The provisions of § 52.21(b) through (w) are hereby incorporated and made a part of the applicable state plan for American Samoa.

[43 FR 26410, June 19, 1978, as amended at 45 FR 52741, Aug. 7, 1980]

Subpart EEE—Approval and Promulgation of Plans

§ 52.2850 Approval and promulgation of implementation plans.

State plans consisting of control strategies, rules, and regulations, and, in certain instances, compliance schedules, which the Administrator has determined meet the requirements of section 16 of the ''Clean Air Amendments of 1970'' have been approved as follows:

DELAWARE

An implementation plan for the State's portion of the Philadelphia Interstate Air Quality Control Region was received by the Department of Health, Education, and Welfare on June 30, 1970. Supplemental information was received October 20, 1970. The Administrator has determined that the State's control strategy for sulfur oxides, as set forth in this implementation plan, is adequate for attainment of the national primary ambient air quality standards for sulfur oxides. Therefore, the Administrator has approved such control strategy, together with specified rules and regulations and the compliance schedule pertaining thereto.

NEW JERSEY

An implementation plan for the State's portion of the Philadelphia Interstate Air Quality Control Region was received by the Department of Health, Education, and Welfare on May 26, 1970. Supplemental information was submitted September 23, 1970. TheAdministrator has determined that the State's control strategy for sulfur oxides, as set forth in this implementation plan, is adequate for attainment of the national primary ambient air quality standards for sulfur oxides. Therefore, the Administrator has approved such control strategy, together with specified rules and regulations and the compliance schedule pertaining thereto.

PENNSYLVANIA

An implementation plan for the State's portion of the Philadelphia Interstate Air Quality Control Region was received by the

Department of Health, Education, and Welfare on May 4, 1970. Supplemental information was received August 4, 1970. The Administrator has determined that the State's control strategy for sulfur oxides, as set forth in this implementation plan, is adequate for attainment of the national primary ambient air quality standards for sulfur oxides. Therefore, the Administrator has approved such control strategy, together with specified rules and regulations pertaining thereto.

KANSAS

An implementation plan for the State's portion of the Kansas City Interstate Air Quality Control Region was received by the Department of Health, Education, and Welfare on November 19, 1970. The Administrator has determined that the State's control strategy for particulate matter, as set forth in this implementation plan, is adequate for attainment of the national primary and secondary ambient air quality standards for particulate matter. Therefore, the Administrator has approved such control strategy, together with specified rules and regulations and the compliance schedule pertaining thereto.

VIRGINIA

An implementation plan for the State's portion of the National Capital Interstate Air Quality Control Region was received by the Department of Health, Education, and Welfare on April 29, 1970. Supplemental information was received August 10 and 14, 1970. The Administrator has determined that the State's control strategy for sulfur oxides and particulate matter, as set forth in this implementation plan, is adequate for attainment of the National primary and secondary ambient air quality standards for sulfur oxides and particulate matter. Therefore, the Administrator has approved such control strategy, together with specified rules and regulations and the compliance schedules pertaining thereto.

MARYLAND

An implementation plan for the State's portion of the National Capital Interstate Air Quality Control Region was received by the Department of Health, Education, and Welfare on May 28, 1970. Supplemental information was submitted August 7 and 21, 1970. The Administrator has determined that the State's control strategy for sulfur oxides and particulate matter, as set forth in this implementation plan, is adequate for attainment of the national primary and secondary ambient air quality standards for sulfur oxides and particulate matter. Therefore, the Administrator has approved such control strategy, together with specified rules and regulations, as well as the compliance schedule pertaining to the sulfur oxides standards.

MARYLAND

An implementation plan for the Baltimore Intrastate Air Quality Control Region was submitted to the Environmental Protection Agency on December 23, 1970. The Administrator as determined that the State's control strategy for sulfur oxides, as set forth in this implementation plan, is adequate for attainment of the national primary ambient air quality standards for sulfur oxides. The Administrator has also determined that the State's control strategy for particulate matter, as set forth in this implementation plan, is adequate for attainment of the national primary and secondary ambient air quality standards for particulate matter. Therefore, the Administrator has approved such control strategies, together with specified rules and regulations, as well as the compliance schedule pertaining to the sulfur oxides standards.

COLORADO

An implementation plan for the Denver Intrastate Air Quality Control Region was received by the Department of Health, Education, and Welfare on May 12, 1970, and was amended by letter dated November 10, 1970. The Administrator has determined that the State's control strategy for particulate matter, as set forth in this implementation plan, is adequate for attainment of the national primary ambient air quality standards for particulate matter. The Administrator has also determined that the State's control strategy for sulfur oxides, as set forth in this implementation plan, is adequate for maintaining the national secondary ambient air quality standards for sulfur oxides. Therefore, the Administrator has approved such control strategies, together with specified rules and regulations and the compliance schedules pertaining thereto.

MISSOURI

An implementation plan for the State's portion of the Kansas City Intrastate Air Quality Control Region was received by the Department of Health, Education, and Welfare on October 14, 1970. The Administrator has determined that the State's control strategy for particulate matter, as set forth in this implementation plan, is adequate for attainment of the national primary and secondary ambient air quality standards for particulate matter. Therefore, the Administrator has approved such control strategy, together with specified rules and regulations and the compliance schedules pertaining thereto.

DISTRICT OF COLUMBIA

An implementation plan for the District's portion of the National Capital Interstate Air Quality Control Region was received by the Department of Health, Education, and

Welfare on May 6, 1970. Supplemental information was received August 24, 1970. The Administrator has determined that the District's control strategy for sulfur oxides and particulate matter, as set forth in this implementation plan, is adequate for attainment of the national primary and secondary ambient air quality standards for sulfur oxides and particulate matter. Therefore, the Administrator has approved such control strategy, together with specified rules and regulations pertaining thereto.

MASSACHUSETTS

An implementation plan for the Boston Intrastate Air Quality Control Region was received by the Department of Health, Education, and Welfare on September 16, 1970. The Administrator has determined that the State's control strategy for sulfur oxides,as set forth in this implementation plan, is adequate for attainment of the national primary ambient air quality standards for sulfur oxides. Therefore, the Administrator has approved such control strategy, together with specified rules and regulations and the compliance schedules pertaining thereto.

[37 FR 2581, Feb. 2, 1972. Redesignated at 37 FR 10846, May 31, 1972]

Subpart FFF—Commonwealth of the Northern Mariana Islands

§ 52.2900 Negative declaration.

(a) Air Pollution Implementation Plan for the Commonwealth of the Northern Mariana Islands.

(1) Letter of December 15, 1982, from the Governor to EPA, which is a negative declaration indicating no major lead sources and continued attainment and maintenance of the National Standards for lead.

[51 FR 40799, Nov. 10, 1986]

§ 52.2920 Identification of plan.

(a) Title of plan: ''Air Pollution Implementation Plan for the Commonwealth of the Northern Mariana Islands.

(b) [Reserved]

(c) The plan revisions described below were officially submitted on the dates specified.

(1) On February 19, 1987 the Governor's representative submitted regulations adopted as signed on December 15, 1986 and published in the *Commonwealth Register,* Volume 9, Number 1, pages 4862–94, on January 19, 1987, as follows:

(i) *Incorporation by reference.* (A) ''CNMI AIR POLLUTION CONTROL REGULATIONS'' pertaining to the preconstruction review of new and modified major sources of lead, as follows.

Part I—Authority
Part II—Purpose and Policy
Part III—Policy
Part IV—Definitions
Part V—Permitting of New Sources and Modifications
Part VI—Registration of Existing Sources
Part VII—Sampling, Testing and Reporting Methods
Part IX—Fees
Part X—Public Participation
Part XI—Enforcement
Part XII—Severability
Part XIII—Effective Date
Part XIV—Certification

[52 FR 43574, Nov. 13, 1987]

APPENDICES A–C—[RESERVED]

APPENDIX D—DETERMINATION OF SULFUR DIOXIDE EMISSIONS FROM STATIONARY SOURCES BY CONTINUOUS MONITORS

1. *Definitions.*

1.1 *Concentration Measurement System.* The total equipment required for the continuous determination of SO_2 gas concentration in a given source effluent.

1.2 *Span.* The value of sulfur dioxide concentration at which the measurement system is set to produce the maximum data display output. For the purposes of this method, the span shall be set at the expected maximum sulfur dioxide concentration except as specified under section 5.2, Field Test for Accuracy.

1.3 *Accuracy* (*Relative*). The degree of correctness with which the measurement system yields the value of gas concentration of a sample relative to the value given by a defined reference method. This accuracy is expressed in terms of error which is the difference between the paired concentration measurements expressed as a percentage of the mean reference value.

1.4 *Calibration Error.* The difference between the pollutant concentration indicated by the measurement system and the known concentration of the test gas mixture.

1.5 *Zero Drift.* The change in measurement system output over a stated period of time of normal continuous operation when the pollutant concentration at the time for the measurement is zero.

1.6 *Calibration Drift.* The change in measurement system output over a stated period of time of normal continuous operation when the pollutant concentration at the time of

the measurement is the same known upscale value.

1.7 *Response Time.* The time interval from a step change in pollutant concentration at the input to the measurement system to the time at which 95 percent of the corresponding final value is reached as displayed on the measurement system data presentation device.

1.8 *Operational Period.* A minimum period of time over which a measurement system is expected to operate within certain performance specifications without unscheduled maintenance, repair or adjustment.

1.9 *Reference Method.* The reference method for determination of SO_2 emissions shall be Method 8 as delineated in Part 60 of this chapter. The analytical and computational portions of Method 8 as they relate to determination of sulfuric acid mist and sulfur trioxide, as well as isokinetic sampling, may be omitted from the overall test procedure.

2. *Principle and Applicability.*

2.1 *Principle.* Gases are continuously sampled in the stack emissions and analyzed for sulfur dioxide by a continuously operating emission measurement system. Performance specifications for the continuous measurement systems are given. Test procedures are given to determine the capability of the measurement systems to conform to the performance specifications. Sampling may include either the extractive or nonextractive (in-situ) approach.

2.2 *Applicability.* The performance specifications are given for continuous sulfur dioxide measurement systems applied to nonferrous smelters.

3. *Apparatus.*

3.1 *Calibration Gas Mixture.* Mixture of a known concentrations of sulfur dioxide in oxygen-free nitrogen. Nominal volumetric concentrations of 50 percent and 90 percent of span are recommended. The mixture of 90 percent of span is to be used to set and to check the span and is referred to as the span gas. The gas mixtures shall be analyzed by the Reference Method at least two weeks prior to use or demonstrated to be accurate and stable by an alternate method subject to approval of the Administrator.

3.2 *Zero Gas.* A gas containing less than 1 ppm sulfur dioxide.

3.3 Equipment for measurement of sulfur dioxide concentration using the Reference Method.

3.4 *Chart Record.* Analog chart recorder, input voltage range compatible with analyzer system output.

3.5 Continuous measurement system for sulfur dioxide.

4. *Measurement System Performance Specifications.*

The following performance specifications shall be met in order that a measurement system shall be considered acceptable under this method.

TABLE I—PERFORMANCE SPECIFICATIONS

Parameter [a]	Specification
1. Accuracy [a]	≤20 percent of reference mean value.
2. Calibration Error [a]	≤5 percent of each (50%, and 30%) calibration gas mixture.
3. Zero Drift (2-hours) [a]	≤2 percent of emission standard.
4. Zero Drift (24-hours) [a]	≤4 percent of emission standard.
5. Calibration Drift (2-hours) [a]	≤2 percent of emission standard.
6. Calibration Drift (24-hours) [a]	≤5 percent of emission standard.
7. Response Time	≤5 minutes maximum.
8. Operational Period	≤168 hours minimum.

[a] Expressed as sum of absolute mean value plus 95 percent confidence interval of a series of tests.

5. *Performance Specification Test Procedures.*

The following test procedures shall be used to determine compliance with the requirements of paragraph 4:

5.1 *Calibration test.*

5.1.1 Analyze each calibration gas mixture (50 percent, 90 percent) for sulfur dioxide by the Reference method and record the results on the example sheet shown in Figure D–1. This step may be omitted for nonextractive monitors where dynamic calibration gas mixtures are not used (see section 5.1.2).

5.1.2 Set up and calibrate the complete measurement system according to the manufacturer's written instructions. This may be accomplished either in the laboratory or in the field. Make a series of five nonconsecutive readings with span gas mixtures alternately at each concentration (example, 50 percent, 90 percent, 50 percent, 90 percent, 50 percent). For nonextractive measurement systems, this test may be performed using procedures specified by the manufacturer and two or more calibration gases whose concentrations are certified by the manufacturer and differ by a factor of two or more. Convert the measurement system output readings to ppm and record the results on the example sheet shown in Figure D–2.

5.2 *Field Test for Accuracy* (*Relative*), *Zero Drift and Calibration Drift.* Install and operate the measurement system in accordance with the manufacturer's written instructions and drawings as follows:

5.2.1 *Conditioning Period.* Offset the zero setting at least 10 percent of span so that

negative zero drift may be quantified. Operate the system for an initial 168-hour conditioning period. During this period the system should measure the SO_2 content of the effluent in a normal operational manner.

5.2.2 *Operational Test Period.* Operate the system for an additional 168-hour period. The system shall be monitoring the source effluent at all times when not being zeroed, calibrated or backpurged.

5.2.2.1 *Field Test for Accuracy* (*Relative*). The analyzer output for the following test shall be maintained between 20 percent and 90 percent of span. It is recommended that a calibrated gas mixture be used to verify the span setting utilized. During this 168-hour test period, make a minimum of nine (9) SO_2 concentration measurements using the Reference Method with a sampling period of one hour. If a measurement system operates across the stack or a portion of it, the Reference Method test shall make a four-point traverse over the measurement system operating path. Isokinetic sampling and analysis for SO_3 and H_2SO_4 mist are not required. For measurement systems employing extractive sampling, place the measurement system and the Reference Method probe tips adjacent to each other in the duct. One test will consist of two simultaneous samples with not less than two analyses on each sample. Record the test data and measurement system concentrations on the example sheet shown in Figure D–3.

5.2.2.2 *Field Test for Zero Drift and Calibration Drift.* Determine the values given by zero and span gas SO_2 concentrations at 2-hour intervals until 15 sets of data are obtained. Alternatively, for nonextractive measurement systems, determine the values given by an electrically or mechanically produced zero condition, and by inserting a certified calibration gas concentration equivalent to not less than 20 percent of span, into the measurement system. Record these readings on the example sheet shown in Figure D–4. These 2-hour periods need not be consecutive but may not overlap. If the analyzer span is set at the expected maximum concentration for the tests performed under section 5.2.2, then the zero and span determinations to be made under this paragraph may be made concurrent with the tests under section 5.2.2.1. Zero and calibration corrections and adjustments are allowed only at 24-hour intervals (except as required under section 5.2.2) or at such shorter intervals as the manufacturer's written instructions specify. Automatic corrections made by the measurement system without operator intervention or initiation are allowable at any time. During the entire 168-hour test period, record the values given by zero and span gas SO_2 concentrations before and after adjustment at 24-hour intervals in the example sheet shown in Figure D–5.

5.3 *Field Test for Response Time.*

5.3.1 This test shall be accomplished using the entire measurement system as installed including sample transport lines if used. Flow rates, line diameters, pumping rates, pressures (do not allow the pressurized calibration gas to change the normal operating pressure in the sample line), etc., shall be at the nominal values for normal operation as specified in the manufacturer's written instructions. In the case of cyclic analyzers, the response time test shall include one cycle.

5.3.2 Introduce a zero concentration of SO_2 into the measurement system sampling interface or as close to the sampling interface as possible. When the system output reading has stabilized, switch quickly to a known concentration of SO_2 at 70 to 90 percent of span. Record the time from concentration switching to final stable response. After the system response has stabilized at the upper level, switch quickly to a zero concentration of SO_2. Record the time from concentration switching to final stable response. Alternatively, for nonextractive monitors, a calibration gas concentration equivalent to 20 percent of span or more may be switched into and out of the sample path and response times recorded. Perform this test sequence three (3) times. For each test record the results on the example sheet shown in Figure D–6.

6. *Calculations, Data Analysis and Reporting.*

6.1 Procedure for determination of mean values and confidence intervals.

6.1.1 The mean value of a data set is calculated according to equation D–1.

Equation D–1

where:

x_i=individual values.

Σ=sum of the individual values.

x=mean value.

n=number of data points.

6.1.2 The 95 percent confidence interval (two-sided) is calculated according to equation D–2.

Equation D–2

where:

Σx_i=sum of all data points.

$^t.975=^t-a/2$, and

$C.I._{95}$=95 percent confidence interval estimated of the average mean value.

TYPICAL VALUES FOR $T_{1-a}/_2$

n	$t.975$	n	$t.975$	n	$t.975$
2	12.706	7	2.447	12	2.201
3	4.303	8	2.365	13	2.179
4	3.182	9	2.306	14	2.160
5	2.776	10	2.262	15	2.145

TYPICAL VALUES FOR $T_{1-a}/_2$—Continued

n	*t*.975	*n*	*t*.975	*n*	*t*.975
6	2.571	11	2.228	16	2.131

The values in this table are already corrected for *n*–1 degrees of freedom. Use *n equal to the number of samples* as data points.

6.2 *Data Analysis and Reporting.*

6.2.1 *Accuracy* (*Relative*). For each of the nine reference method testing periods, determine the average sulfur dioxide concentration reported by the continuous measurement system. These average concentrations shall be determined from the measurement system data recorded under section 5.2.2.1 by integrating the pollutant concentrations over each of the time intervals concurrent with each reference method test, then dividing by the cumulative time of each applicable reference method testing period. Before proceeding to the next step, determine the basis (wet or dry) of the measurement system data and reference method test data concentrations.

If the bases are not consistent, apply a moisture correction to either the referenced method concentrations or the measurement system concentrations, as appropriate. Determine the correction factor by moisture tests concurrent with the reference method testing periods. Report the moisture test method and the correction procedure employed. For each of the nine test runs, subtract the Reference Method test concentrations from the continuous monitoring system average concentrations. Using these data, compute the mean difference and the 95 percent confidence interval using equations D–1 and D–2. Accuracy is reported as the sum of the absolute value of the mean difference and the 95 percent confidence interval expressed as a percentage of the mean reference method value. Use the example sheet shown in Figure D–3.

6.2.2 *Calibration Error.* Using the data from section 5.1 of this appendix, subtract the measured SO_2 value determined under section 5.1.1 (Figure D–1) from the value shown by the measurement system for each of the 5 readings at each concentration measured under section 5.1.2 (Figure D–2). Calculate the mean of these difference values and the 95 percent confidence intervals according to equations D–1 and D–2. The calibration error is reported as the sum of absolute value of the mean difference and the 95 percent confidence interval as a percentage of each respective calibration gas concentration. Use example sheet shown in Figure D–2.

6.2.3 *Zero Drift* (*2-hour*). Using the zero concentration values measured each two hours during the field test, calculate the differences between *consecutive* two-hour readings expressed in ppm. Calculate the mean difference and the confidence interval using Equations D–1 and D–2. Report the zero drift as the sum of the absolute mean value and the confidence interval as a percentage of the emission standard. Use example sheet shown in Figure D–4.

6.2.4 *Zero Drift* (*24-hour*). Using the zero concentration values measured every 24 hours during the field test, calculate the differences between the zero point after zero adjustment and the zero value 24 hours later just prior to zero adjustment. Calculate the mean value of these points and the confidence interval using Equations D–1 and D–2. Report the zero drift as the sum of the absolute mean and confidence interval as a percentage of the emission standard. Use example sheet shown in Figure D–5.

6.2.5 *Calibration Drift* (*2-hour*). Using the calibration values obtained at two-hour intervals during the field test, calculate the differences between *consecutive* two-hour readings expressed as ppm. These values should be corrected for the corresponding zero drift during that two-hour period. Calculate the mean and confidence interval of these corrected difference values using Equations D–1 and D–2. Do not use the differences between non-consecutive readings. Report the calibration drift as the sum of the absolute mean and confidence interval as a percentage of the emission standard. Use the example sheet shown in Figure D–4.

6.2.6 *Calibration Drift* (*24-hour*). Using the calibration values measured every 24 hours during the field test, calculate the differences between the calibration concentration reading after zero and calibration adjustment and the calibration concentration reading 24 hours later after zero adjustment but before calibration adjustment. Calculate the mean value of these differences and the confidence interval using equations D–1 and D–2. Report the sum of the absolute mean and confidence interval as a percentage of the emission standard. Use the example sheet shown in Figure D–5.

6.2.7 *Response Time.* Using the charts from section 5.3 of this Appendix, calculate the time interval from concentration switching to 95 percent to the final stable value for all upscale and downscale tests. Report the mean of the three upscale test times and the mean of the three downscale test times. For nonextractive instruments using a calibration gas cell to determine response time, the observed times shall be extrapolated to 90 percent of full scale response time. For example, if the observed time for a 20 percent of span gas cell is one minute, this would be equivalent to a 4½-minute response time when extrapolated to 90 percent of span. The two average times should not differ by more than 15 percent of the slower time. Report the slower time as the system response time. Use the example sheet shown in Figure D–6.

6.2.8 *Operational Period.* During the 168-hour performance and operational test period, the measurement system shall not require any corrective maintenance, repair, replacement, or adjustment other than that clearly specified as required in the operation and maintenance manuals as routine and expected during a one-week period. If the measurement system operates within the specified performance parameters and does not require corrective maintenance, repair, replacement or adjustment other than specified above, during the 168-hour test period, the operational period will be successfully concluded. Failure of the measurement to meet this requirement shall call for a repetition of the 168-hour test period. Portions of the test which were satisfactorily completed need not be repeated. Failure to meet any performance specifications shall call for a repetition of the one-week performance test period and that portion of the testing which is related to the failed specification. All maintenance and adjustments required shall be recorded. Output readings shall be recorded before and after all adjustments.

6.2.9 *Performance Specifications Testing Frequency.* In the event that significant repair work is performed in the system, the company shall demonstrate to the Administrator that the system still meets the performance specifications listed in Table I of this appendix. The Administrator may require a performance test at any time he determines that such test is necessary to verify the performance of the measurement system.

7. *References.*

7.1 *Monitoring Instrumentation for the Measurement of Sulfur Dioxide in Stationary Source Emissions*, Environmental Protection Agency, Research Triangle Park, N.C., February 1973.

7.2 *Instrumentation for the Determination of Nitrogen Oxides Content of Stationary Source Emissions*, Environmental Protection Agency, Research Triangle Park, N.C., APTD 0847, Vol. I, October 1971; APTD 0942, Vol. II, January 1972.

7.3 *Experimental Statistics*, Department of Commerce, Handbook 91, 1963, p. 3–31, paragraphs 3–3.1.4.

7.4 *Performance Specifications for Stationary-Source Monitoring Systems for Gases, and Visible Emissions*, Environmental Protection Agency, Research Triangle Park, N.C., EPA–650/2–74–013, January 1974.

FIGURE D–1—ANALYSIS OF CALIBRATION GAS MIXTURES

Date ———— Reference Method Used ————

Mid Range Calibration Gas Mixture

Sample 1 ..... ppm
Sample 2 ..... ppm
Sample 3 ..... ppm
Average ..... ppm

High Range (span) Calibration Gas Mixture

Sample 1 ..... ppm
Sample 2 ..... ppm
Sample 3 ..... ppm
Average ..... ppm

FIGURE D–2—CALIBRATION ERROR DETERMINATION

Calibration gas mixture data (from fig. D–1): Mid (50 percent) average —— p/m, high (90 percent) average —— p/m

[See footnotes at end of table]

Run No.	Calibration gas concentration[1]	Measurement system reading, p/m	Differences, p/m[2]
1			
2			
3			
4			
5			
6			
7			
8			
9			
1			
11			
12			
13			

FIGURE D–2—CALIBRATION ERROR DETERMINATION—Continued

Calibration gas mixture data (from fig. D–1): Mid (50 percent) average —— p/m, high (90 percent) average —— p/m

[See footnotes at end of table]

Run No.	Calibration gas concentration[1]	Measurement system reading, p/m	Differences, p/m[2]
14			
15			

	Percent of full scale reading	
	50% mid	90% high
Mean difference	.....	.....
Confidence interval	±.....	±.....
Calibration error=Mean difference[3] + C.I. / Average calibration gas concentration × 100	%.....	%.....

[1] Mid or high.
[2] Calibration gas concentration—measurement system reading.
[3] Absolute value.

FIGURE D–3—ACCURACY

Date and time	Test No.	Reference method samples	Analyzer 1-hour average[1] (p/m)	Difference[2] (p/m)
1.				
2.				
3.				
4.				
5.				
6.				
7.				
8.				
9.				

Mean difference= ————p/m.
95 percent confidence interval=+ ————p/m.
Mean Reference method value= ————p/m.
Accuracy=Mean difference (absolute value)+95 percent confidence interval/Mean reference method value×100———percent

[1] Explain method used to determine average.
[2] Difference=the 1-h average minus the reference method average.

FIGURE D–4—ZERO AND CALIBRATION DRIFT (2 H)

Date	Time		Date set No.	Zero reading	Zero drift (Δzero)	Span reading	(Δspan)	Calibration drift (Δspan-Δzero)
	Begin	End						
			1					
			2					
			3					
			4					

FIGURE D–4—ZERO AND CALIBRATION DRIFT (2 H)—Continued

Date	Time		Date set No.	Zero reading	Zero drift (Δzero)	Span reading	(Δspan)	Calibration drift (Δspan-Δzero)
	Begin	End						
			5					
			6					
			7					
			8					
			9					
			10					
			11					
			12					
			13					
			14					
			15					

Zero drift=[mean zero drift[1] ——— + CI (zero) ——— ÷emission standard]×100= ———.
Calibration drift=[mean span drift[1] ——— CI + CI (span) ——— ÷emission standard]×100= ———.

[1] Absolute value.

FIGURE D–5—ZERO AND CALIBRATION DRIFT (24 HR)

Date and time	Zero reading	Zero drift (Δzero)	Span reading (after zero adjustment)	Calibration drift (Δspan)

Zero drift=[mean zero drift [1]——— + CI (zero) ——— ÷emission standard]×100= ———.
Calibration drift=[mean span drift [1]——— + CI (span) ——— ÷emission standard]×100= ———.

[1] Absolute value.

FIGURE D–6—RESPONSE TIME

Date of Test _____.
Span Gas Concentration _____ ppm.
Analyzer Span Setting _____ ppm.
Upscale:
1 _____ seconds.
2 _____ seconds.
3 _____seconds.
Average upscale response _____ seconds.
Downscale:
1 _____ seconds.
2 _____ seconds.
3 _____ seconds.
Average downscale response _____ seconds.

System response time=slower time ___ seconds.

Percent deviation from slowest time=average upscale−average downscale×100%/slower time

[40 FR 5517, Feb. 6, 1975]

APPENDIX E—PERFORMANCE SPECIFICATIONS AND, SPECIFICATION TEST PROCEDURES FOR MONITORING SYSTEMS FOR EFFLUENT STREAM GAS VOLUMETRIC FLOW RATE

1. *Principle and applicability.*

1.1 *Principle.* Effluent stream gas volumetric flow rates are sampled and analyzed by a continuous measurement system. To verify the measurement system performance, values obtained from the measurement system are compared against simultaneous values obtained using the reference method. These comparison tests will be performed to determine the relative accuracy, and drift of the measurement system over the range of operating conditions expected to occur during normal operation of the source. If the measurement system is such that the specified tests in section 5.1 for drift do not apply, those test procedures shall be disregarded.

1.2 *Applicability.* This method is applicable to subparts which require continuous gas volumetric flow rate measurement. Specifications are given in terms of performance. Test procedures are given for determining compliance with performance specifications.

2. *Apparatus.*

2.1 Continuous measurement system for determining stack gas volumetric flow rate.

2.2 Equipment for measurement of stack gas volumetric flow rate as specified in the reference method.

3. *Definitions.*

3.1 *Measurement system.* The total equipment required for the determination of the gas volumetric flow rate in a duct or stack. The system consists of three major subsystems:

3.1.1 *Sampling interface.* That portion of the measurement system that performs one or more of the following operations: Delineation, acquisition, transportation, and conditioning of a signal from the stack gas and protection of the analyzer from any hostile aspects of the source environment.

3.1.2 *Analyzer.* That portion of the measurement system which senses the stack gas flow rate or velocity pressure and generates a signal output that is a function of the flow rate or velocity of the gases.

3.1.3 *Data presentation.* That portion of the measurement system that provides a display of the output signal in terms of volumetric flow rate units, or other units which are convertible to volumetric flow rate units.

3.2 *Span.* The value of gas volumetric flow rate at which the measurement system is set to produce the maximum data display output. For the purposes of this method, the span shall be set at 1.5 times the maximum volumetric flow rate expected under varying operating conditions of the source.

3.3 *Zero drift.* The change in measurement system output over a stated period of time of normal continuous operation when gas volumetric flow rate at the time of the measurements is zero.

3.4 *Calibration drift.* The change in measurement system output over a stated time period of normal continuous operation when the gas volumetric flow rate at the time of the measurement is 67 percent of the span value.

3.5 *Operation period.* A minimum period of time over which a measurement system is expected to operate within certain performance specifications without unscheduled maintenance, repair, or adjustment.

3.6 *Orientation sensitivity.* The angular tolerance to which the sensor can be misaligned from its correct orientation to measure the flow rate vector before a specified error occurs in the indicated flow rate compared to the reference flow rate.

3.7 *Reference method.* Method 2 as delineated in 40 CFR Part 60.

4. *Measurement system performance specifications.* A measurement system must meet the performance specifications in Table E–1 to be considered acceptable under this method.

TABLE E–1

Parameter	Specifications
Accuracy (relative)	<10 percent of mean reference value (paragraph 6.3.1).
Zero drift (24 hours)	<3 percent of span (paragraph 6.3.2).
Calibration drift (24 hours)	<3 percent of span (paragraph 6.3.3).
Operational period	<168 hours minimum.

5. *Test procedures.*

5.1 Field test for accuracy, zero drift, calibration drift, and operation period.

5.1.1 *System conditioning.* Set up and operate the measurement system in accordance with the manufacturer's written instructions and drawings. Offset the zero point of the chart recorder so that negative values up to 5 percent of the span value may be registered. Operate the system for an initial 168-hour conditioning period. During this initial period, the system should measure the gas stream volumetric flow rate in a normal operational manner. After completion of this conditioning period, the formal 168-hour performance and operational test period shall begin.

5.1.2 *Field test for accuracy and operational period.* During the 168-hour test period, the system should be continuously measuring gas volumetric flow rate at all times. During this period make a series of 14 volumetric flow rate determinations simultaneously using the reference method and the measurement system. The 14 determinations can be made at any time interval at least one hour

apart during the 168-hour period except that at least one determination on five different days must be made with one determination on the last day of such period. The determinations shall be conducted over the range of volumetric flow rates expected to occur during normal operation of the source. The measurement system volumetric flow rate reading corresponding to the period of time during which each reference method run was made may be obtained by continuous integration of the measurement system signal over the test interval. Integration may be by use of mechanical integration of electrical units on the chart recorder or use of a planimeter on the strip chart recorder. The location and orientation of the reference method measurement device and the measurement system should be as close as practical without interference, but no closer than 1.3 cm (0.5 inch) to each other and shall be such that dilution air or other interferences cannot be interjected into the stack or duct between the pitot tube and the measurement system. Be careful not to locate the reference method pitot tube directly up or down stream of the measurement system sensor.

5.1.3 *Field test for calibration drift and zero drift.* At 24-hour intervals, but more frequently if recommended by the manufacturer, subject the measurement system to the manufacturer's specified zero and calibration procedures, if appropriate. Record the measurement system output readings before and after adjustment. Automatic corrections made by the system without operator intervention are allowable at anytime.

5.1.4 *Field test for orientation sensitivity.* If a velocity measurement system is either a single point measurement device or a pressure sensor or any other device such as pitot tube which uses the flow direction of the test gas, then the following test shall be followed and a performance specification of ±10 degrees device orientation sensitivity for ±4 percent flow rate determination accuracy must be met in order for the measurement system to be considered acceptable under this method. This is in addition to the performance specifications given in paragraph 4 of this appendix. During a period of relatively steady state gas flow, perform the following orientation test using the measurement system. The system should be continuously measuring gas velocity at all times. Rotate the measurement 10° on each side of the direction of flow in increments of 5°. Perform this test three times each at:

(1) Maximum operating velocity (±15 percent);

(2) 67 percent ±7.5 percent of the maximum operating velocity; and

(3) 33 percent ±7.5 percent of the maximum operating velocity if (2) and (3) are normal operating practices.

6. *Calculations data analysis and reporting.*

6.1 *Procedure for determination of stack gas volumetric flow rate.* Calculate the reference stack gas velocity and corresponding stack gas volumetric flow rate with the calibrated type S pitot tube measurements by the reference method. Calculate the measurement system stack gas volumetric flow rate as specified by the manufacturer's written instructions. Record the volumetric flow rates for each in the appropriate tables.

6.2 *Procedure for determination of mean values and 95 percent confidence intervals.*

6.2.1 *Mean value.* The mean value of a data set is calculated according to Equation E–1.

EQUATION E–1

$$\overline{\chi} = \frac{1}{n}\sum_{i=1}\chi_i$$

where:

x_i=individual values.
Σ=sum of the individual values.
x=mean value.
n=data points.

6.2.2 *95 percent confidence level.* The 95 percent confidence level (two sided) is calculated according to Equation E–2.

EQUATION E–2

$$C.I._{95} = \frac{t_{.975}}{n\sqrt{n-1}}\sqrt{n\left(\sum \chi_i 2\right) - \left(\sum \chi_i\right)^2}$$

where:

Σx_i=sum of all data points.
(Σx_i)=sum of squares of all data points.
$C.I._{95}$=95 percent confidence interval estimate of the average mean value.

VALUES FOR *t*.975

n	*t*.975	*n*	*t*.975	*n*	*t*.975
2	12.706	7	2.447	12	2.201
3	4.303	8	2.365	13	2.179
4	3.182	9	2.306	14	2.160
5	2.776	10	2.262	15	2.145
6	2.571	11	2.228	16	2.131

The values in this table are already corrected for *n*–1 degrees of freedom. Use *n* equal to the number of samples as data points.

6.3 *Data analysis and reporting.*

6.3.1 *Accuracy* (*relative*). First, calculate the mean reference value (Equation E–1) of the 14 average volumetric flow rates calculated by the reference method. Second, from the 14 pairs of average volumetric flow rates calculated by the reference method and measurement system volumetric flow rate readings, calculate the mean value (Equation E–1) of the differences of the 14 paired readings. Calculate the 95 percent confidence interval (Equation E–2) using the differences

of fourteen paired readings. To calculate the values in the second part of this section substitute d_i for x_i and d for x in Equations E–1 and E–2 where d_i equals the difference of each paired reading and d equals the mean value of the fourteen paired differences. Third, report the sum of the absolute mean value of the differences of the fourteen paired readings and the 95 percent confidence interval of the differences of value calculated in the first part of the section. Divide this total by the mean reference value and report the result as a percentage. This percentage is the relative accuracy.

6.3.2 *Zero drift* (*24 hour*). From the zero values measured each 24 hours during the field test, calculate the differences between successive readings expressed in volumetric flow rate units. Calculate the mean value of these differences and the confidence interval of these differences using Equations E–1 and E–2. Report the sum of the absolute value of the mean difference and the confidence interval as a percentage of the measurement system span. This percentage is the zero drift.

6.3.3 *Calibration drift* (*24 hour*). From the calibration values measured every 24 hours during the field test calculate the differences between: (1) The calibration reading after zero and calibration adjustment, and (2) the calibration reading 24 hours later after zero adjustment but before calibration adjustment. Calculate the mean value of these differences and the confidence interval using Equations E–1 and E–2. Report the sum of the absolute value of the mean difference and confidence interval as a percentage of the measurement system span. This percentage is the calibration drift.

6.3.4 *Operation period*. Other than that clearly specified as required in the operation and maintenance manual, the measurement system shall not require any corrective maintenance, repair, replacement or adjustment during the 168-hour performance and operational test period. If the measurement system operates within the specified performance parameters and does not require corrective maintenance, repair, replacement or adjustment other than as specified above during the 168-hour test period, the operational period will be successfully concluded. Failure of the measurement to meet this requirement shall call for a repetition of the 168-hour test period. Portions of the test, except for the 168-hour field test period, which were satisfactorily completed need not be repeated. Failure to meet any performance specifications shall call for a repetition of the one-week performance test period and that portion of the testing which is related to the failed specification. All maintenance and adjustments required shall be recorded. Output readings shall be recorded before and after all adjustments.

6.3.5 *Orientation sensitivity*. In the event the conditions of paragraph 5.1.4 of this appendix are required, the following calculations shall be performed. Calculate the ratio of each measurement system reading divided by the reference pitot tube readings. Graph the ratio vs. angle of deflection on each side of center. Report the points at which the ratio differs by more than ±4 percent from unity (1.00).

[40 FR 5521, Feb. 6, 1975]