AUTHENTICATED
U.S. GOVERNMENT
INFORMATION
GPO

Program, pursuant to title IV of the Clean Air Act, 42 U.S.C. 7401, *et seq.*, as amended by Public Law 101–549 (November 15, 1990).

(b) *Scope.* The regulations under this part set forth certain generally applicable provisions under the Acid Rain Program. The regulations also set forth requirements for obtaining three types of Acid Rain permits, during Phases I and II, for which an affected source may apply: Acid Rain permits issued by the United States Environmental Protection Agency during Phase I; the Acid Rain portion of an operating permit issued by a State permitting authority during Phase II; and the Acid Rain portion of an operating permit issued by EPA when it is the permitting authority during Phase II. The requirements under this part supplement, and in some cases modify, the requirements under part 70 of this chapter and other regulations implementing title V for approving and implementing State operating permit programs and for federal issuance of operating permits under title V, as such requirements apply to affected sources under the Acid Rain Program.

§ 72.2 Definitions.

The terms used in this part, in parts 73, 74, 75, 76, 77 and 78 of this chapter shall have the meanings set forth in the Act, including sections 302 and 402 of the Act, and in this section as follows:

Account number means the identification number given by the Administrator to each Allowance Tracking System account pursuant to § 73.31(d) of this chapter.

Acid Rain compliance option means one of the methods of compliance used by an affected unit under the Acid Rain Program as described in a compliance plan submitted and approved in accordance with subpart D of this part, part 74 of this chapter or part 76 of this chapter.

Acid Rain emissions limitation means:

(1) For the purposes of sulfur dioxide emissions:

(i) The tonnage equivalent of the allowances authorized to be allocated to an affected unit for use in a calendar year under section 404(a)(1) and (a)(3) of the Act, the basic Phase II allowance allocations authorized to be allocated to an affected unit for use in a calendar year, or the allowances authorized to be allocated to an opt-in source under section 410 of the Act for use in a calendar year;

(ii) As adjusted:

(A) By allowances allocated by the Administrator pursuant to section 403, section 405 (a)(2), (a)(3), (b)(2), (c)(4), (d)(3), and (h)(2), and section 406 of the Act;

(B) By allowances allocated by the Administrator pursuant to subpart D of this part; and thereafter

(C) By allowance transfers to or from the compliance subaccount for that unit that were recorded or properly submitted for recordation by the allowance transfer deadline as provided in § 73.35 of this chapter, after deductions and other adjustments are made pursuant to § 73.34(c) of this chapter; and

(2) For purposes of nitrogen oxides emissions, the applicable limitation established by regulations promulgated by the Administrator pursuant to section 407 of the Act, as modified by an Acid Rain permit application submitted to the permitting authority, and an Acid Rain permit issued by the permitting authority, in accordance with regulations implementing section 407 of the Act.

Acid Rain emissions reduction requirement means a requirement under the Acid Rain Program to reduce the emissions of sulfur dioxide or nitrogen oxides from a unit to a specified level or by a specified percentage.

Acid Rain permit or permit means the legally binding written document, or portion of such document, issued by a permitting authority under this part (following an opportunity for appeal pursuant to part 78 of this chapter or any State administrative appeals procedure), including any permit revisions, specifying the Acid Rain Program requirements applicable to an affected source, to each affected unit at an affected source, and to the owners and operators and the designated representative of the affected source or the affected unit.

Acid Rain Program means the national sulfur dioxide and nitrogen oxides air pollution control and emissions

reduction program established in accordance with title IV of the Act, this part, and parts 73, 74, 75, 76, 77, and 78 of this chapter.

Act means the Clean Air Act, 42 U.S.C. 7401, *et seq.* as amended by Public Law No. 101–549 (November 15, 1990).

Actual SO_2 emissions rate means the annual average sulfur dioxide emissions rate for the unit (expressed in lb/mmBtu), for the specified calendar year; *provided* that, if the unit is listed in the NADB, the ''1985 actual SO_2 emissions rate'' for the unit shall be the rate specified by the Administrator in the NADB under the data field ''SO2RTE.''

Add-on control means a pollution reduction control technology that operates independent of the combustion process.

Additional advance auction means the auction of advance allowances that were offered the previous year for sale in an advance sale.

Administrator means the Administrator of the United States Environmental Protection Agency or the Administrator's duly authorized representative.

Advance allowance means an allowance that may be used for purposes of compliance with a unit's Acid Rain sulfur dioxide emissions limitation requirements beginning no earlier than seven years following the year in which the allowance is first offered for sale.

Advance auction means an auction of advance allowances.

Advance sale means a sale of advance allowances.

Affected source means a source that includes one or more affected units.

Affected unit means a unit that is subject to any Acid Rain emissions reduction requirement or Acid Rain emissions limitation under § 72.6 or part 74 of this chapter.

Affiliate shall have the meaning set forth in section 2(a)(11) of the Public Utility Holding Company Act of 1935, 15 U.S.C. 79b(a)(11), as of November 15, 1990.

Allocate or allocation means the initial crediting of an allowance by the Administrator to an Allowance Tracking System unit account or general account.

Allowable SO_2 emissions rate means the most stringent federally enforceable emissions limitation for sulfur dioxide (in lb/mmBtu) applicable to the unit or combustion source for the specified calendar year, or for such subsequent year as determined by the Administrator where such a limitation does not exist for the specified year; provided that, if a Phase I or Phase II unit is listed in the NADB, the ''1985 allowable SO_2 emissions rate'' for the Phase I or Phase II unit shall be the rate specified by the Administrator in the NADB under the data field ''1985 annualized boiler SO_2 emission limit.''

Allowance means an authorization by the Administrator under the Acid Rain Program to emit up to one ton of sulfur dioxide during or after a specified calendar year.

Allowance deduction, or deduct when referring to allowances, means the permanent withdrawal of allowances by the Administrator from an Allowance Tracking System compliance subaccount, or future year subaccount, to account for the number of tons of SO_2 emissions from an affected unit for the calendar year, for tonnage emissions estimates calculated for periods of missing data as provided in part 75 of this chapter, or for any other allowance surrender obligations of the Acid Rain Program.

Allowances held or hold allowances means the allowances recorded by the Administrator, or submitted to the Administrator for recordation in accordance with § 73.50 of this chapter, in an Allowance Tracking System account.

Allowance reserve means any bank of allowances established by the Administrator in the Allowance Tracking System pursuant to sections 404(a)(2) (Phase I extension reserve), 404(g) (energy conservation and renewable energy reserve), or 416(b) (special allowance reserve) of the Act, and implemented in accordance with part 73, subpart B of this chapter.

Allowance Tracking System or ATS means the Acid Rain Program system by which the Administrator allocates, records, deducts, and tracks allowances.

Allowance Tracking System account means an account in the Allowance Tracking System established by the

Administrator for purposes of allocating, holding, transferring, and using allowances.

Allowance transfer deadline means midnight of January 30 or, if January 30 is not a business day, midnight of the first business day thereafter and is the deadline by which allowances may be submitted for recordation in an affected unit's compliance subaccount for the purposes of meeting the unit's Acid Rain emissions limitation requirements for sulfur dioxide for the previous calendar year.

Alternative monitoring system means a system or a component of a system designed to provide direct or indirect data of mass emissions per time period, pollutant concentrations, or volumetric flow, that is demonstrated to the Administrator as having the same precision, reliability, accessibility, and timeliness as the data provided by a certified CEMS or certified CEMS component in accordance with part 75 of this chapter.

As-fired means the taking of a fuel sample just prior to its introduction into the unit for combustion.

Auction subaccount means a subaccount in the Special Allowance Reserve, as specified in section 416(b) of the Act, which contains allowances to be sold at auction in the amount of 150,000 per year from calendar year 1995 through 1999, inclusive, and 200,000 per year for each year begnning in calendar year 2000, subject to the adjustments noted in the regulations in part 73, subpart E of this chapter.

Authorized account representative means a responsible natural person who is authorized, in accordance with part 73 of this chapter, to transfer and otherwise dispose of allowances held in an Allowance Tracking System general account; or, in the case of a unit account, the designated representative of the owners and operators of the affected unit.

Automated data acquisition and handling system means that component of the CEMS, COMS, or other emissions monitoring system approved by the Administrator for use in the Acid Rain Program, designed to interpret and convert individual output signals from pollutant concentration monitors, flow monitors, diluent gas monitors, opacity monitors, and other component parts of the monitoring system to produce a continuous record of the measured parameters in the measurement units required by part 75 of this chapter.

Award means the conditional set-aside by the Administrator, based on the submission of an early ranking application pursuant to subpart D of this part, of an allowance from the Phase I extension reserve, for possible future allocation to a Phase I extension applicant's Allowance Tracking System unit account.

Backup fuel means a fuel for a unit where: (1) For purposes of the requirements of the monitoring exception of appendix E of part 75 of this chapter, the fuel provides less than 10.0 percent of the heat input to a unit during the three calendar years prior to certification testing for the primary fuel and the fuel provides less than 15.0 percent of the heat input to a unit in each of those three calendar years; or the Administrator approves the fuel as a backup fuel; and (2) For all other purposes under the Acid Rain Program, a fuel that is not the primary fuel (expressed in mmBtu) consumed by an affected unit for the applicable calendar year.

Baseline means the annual average quantity of fossil fuel consumed by a unit, measured in millions of British Thermal Units (expressed in mmBtu) for calendar years 1985 through 1987; *provided* that in the event that a unit is listed in the NADB, the baseline will be calculated for each unit-generator pair that includes the unit, and the unit's baseline will be the sum of such unit-generator baselines. The unit-generator baseline will be as provided in the NADB under the data field ''BASE8587'', as adjusted by the outage hours listed in the NADB under the data field ''OUTAGEHR'' in accordance with the following equation:

$$\text{Baseline}=\text{BASE8587}\times\{26280/(26280-\text{OUTAGEHR})\}\times\{36/(36-\text{months not on line})\}\times 10^{6}$$

''Months not on line'' is the number of months during January 1985 through December 1987 prior to the commencement of firing for units that commenced firing in that period, i.e., the number of months, in that period, prior

to the on-line month listed under the data field ''BLRMNONL'' and the on-line year listed in the data field ''BLRYRONL'' in the NADB.

Basic Phase II allowance allocations means:

(1) For calendar years 2000 through 2009 inclusive, allocations of allowances made by the Administrator pursuant to section 403 and section 405 (b)(1), (3), and (4); (c)(1), (2), (3), and (5); (d)(1), (2), (4), and (5); (e); (f); (g)(1), (2), (3), (4), and (5); (h)(1); (i); and (j).

(2) For each calendar year beginning in 2010, allocations of allowances made by the Administrator pursuant to section 403 and section 405 (b)(1), (3), and (4); (c)(1), (2), (3), and (5); (d)(1), (2), (4), and (5); (e); (f); (g)(1), (2), (3), (4), and (5); (h)(1) and (3); (i); and (j).

Bias means systematic error, resulting in measurements that will be either consistently low or high relative to the reference value.

Boiler means an enclosed fossil or other fuel-fired combustion device used to produce heat and to transfer heat to recirculating water, steam, or any other medium.

Bypass operating quarter means a calendar quarter during which emissions pass through a stack, duct or flue that bypasses add-on emission controls.

By-pass stack means any duct, stack, or conduit through which emissions from an affected unit may or do pass to the atmosphere, which either augments or substitutes for the principal stack exhaust system or ductwork during any portion of the unit's operation.

Calibration error means the difference between:

(1) The response of gaseous monitor to a calibration gas and the known concentration of the calibration gas;

(2) The response of a flow monitor to a reference signal and the known value of the reference signal; or

(3) The response of a continuous opacity monitoring system to an attenuation filter and the known value of the filter after a stated period of operation during which no unscheduled maintenance, repair, or adjustment took place.

Calibration gas means: (1) a standard reference material; (2) a NIST traceable reference material; (3) a Protocol 1 gas; (4) a research gas material; or (5) zero air material.

Capacity factor means either: (1) the ratio of a unit's actual annual electric output (expressed in MWe-hr) to the unit's nameplate capacity times 8760 hours, or (2) the ratio of a unit's annual heat input (in million British thermal units or equivalent units of measure) to the unit's maximum design heat input (in million British thermal units per hour or equivalent units of measure) times 8,760 hours.

CEMS precision or precision as applied to the monitoring requirements of part 75 of this chapter, means the closeness of a measurement to the actual measured value expressed as the uncertainty associated with repeated measurements of the same sample or of different samples from the same process (e.g., the random error associated with simultaneous measurements of a process made by more than one instrument). A measurement technique is determined to have increasing ''precision'' as the variation among the repeated measurements decreases.

Centroidal area means a representational concentric area that is geometrically similar to the stack or duct cross section, and is not greater than 1 percent of the stack or duct cross-sectional area.

Certificate of representation means the completed and signed submission required by § 72.20, for certifying the appointment of a designated representative for an affected source or a group of identified affected sources authorized to represent the owners and operators of such source(s) and of the affected units at such source(s) with regard to matters under the Acid Rain Program.

Certifying official, for purposes of part 73 of this chapter, means:

(1) For a corporation, a president, secretary, treasurer, or vice-president of the corporation in charge of a principal business function, or any other person who performs similar policy or decision-making functions for the corporation;

(2) For partnership or sole proprietorship, a general partner or the proprietor, respectively; and

(3) For a local government entity or State, federal, or other public agency,

either a principal executive officer or ranking elected official.

Coal means all solid fuels classified as anthracite, bituminous, subbituminous, or lignite by the American Society for Testing and Materials Designation ASTM D388–92 ''Standard Classification of Coals by Rank'' (as incorporated by reference in § 72.13).

Coal-derived fuel means any fuel, whether in a solid, liquid, or gaseous state, produced by the mechanical, thermal, or chemical processing of coal (e.g., pulverized coal, coal refuse, liquified or gasified coal, washed coal, chemically cleaned coal, coal-oil mixtures, and coke).

Coal-fired means the combustion of fuel consisting of coal or any coal-derived fuel (except a coal-derived gaseous fuel with a sulfur content no greater than natural gas), alone or in combination with any other fuel, where:

(1) For purposes of the requirements of part 75 of this chapter, a unit is ''coal-fired'' independent of the percentage of coal or coal-derived fuel consumed in any calendar year (expressed in mmBtu); and

(2) For all other purposes under the Acid Rain Program (including for calculating allowance allocations pursuant to part 73 of this chapter and applicability of the requirements of section 407 of the Act), a unit is ''coal-fired'' if it uses coal or coal-derived fuel as its primary fuel (expressed in mmBtu); *provided* that, if the unit is listed in the NADB, the primary fuel is the fuel listed in the NADB under the data field ''PRIMFUEL''.

Cogeneration unit means a unit that has equipment used to produce electric energy and forms of useful thermal energy (such as heat or steam) for industrial, commercial, heating or cooling purposes, through the sequential use of energy.

Combustion source means a stationary fossil fuel fired boiler, turbine, or internal combustion engine that has submitted or intends to submit an opt-in permit application under § 74.14 of this chapter to enter the Opt-in Program.

Commence commercial operation means to have begun to generate electricity for sale, including the sale of test generation.

Commence construction means that an owner or operator has either undertaken a continuous program of construction or has entered into a contractual obligation to undertake and complete, within a reasonable time, a continuous program of construction.

Commence operation means to have begun any mechanical, chemical, or electronic process, including start-up of an emissions control technology or emissions monitor or of a unit's combustion chamber.

Common stack means the exhaust of emissions from two or more units through a single flue.

Compensating unit means an affected unit that is not otherwise subject to Acid Rain emissions limitation or Acid Rain emissions reduction requirements during Phase I and that is designated as a Phase I unit in a reduced utilization plan under § 72.43; provided that an opt-in source shall not be a compensating unit.

Compliance certification means a submission to the Administrator or permitting authority, as appropriate, that is required by this part, by part 73, 74, 75, 76, 77, or 78 of this chapter, to report an affected source or an affected unit's compliance or non-compliance with a provision of the Acid Rain Program and that is signed and verified by the designated representative in accordance with subparts B and I of this part and the Acid Rain Program regulations generally.

Compliance plan, for the purposes of the Acid Rain Program, means the document submitted for an affected source in accordance with subpart C of this part or subpart E of part 74 of this chapter, or part 76 of this chapter, specifying the method(s) (including one or more Acid Rain compliance options as provided under subpart D of this part or subpart E of part 74 of this chapter, or part 76 of this chapter by which each affected unit at the source will meet the applicable Acid Rain emissions limitation and Acid Rain emissions reduction requirements.

Compliance subaccount means the subaccount in an affected unit's Allowance Tracking System account, established pursuant to § 73.31 (a) or (b) of this chapter, in which are held, from the date that allowances for the current

calendar year are recorded under § 73.34(a) until December 31, allowances available for use by the unit in the current calendar year and, after December 31 until the date that deductions are made under § 73.35(b), allowances available for use by the unit in the preceding calendar year, for the purpose of meeting the unit's Acid Rain emissions limitation for sulfur dioxide.

Compliance use date means the first calendar year for which an allowance may be used for purposes of meeting a unit's Acid Rain emissions limitation for sulfur dioxide.

Conservation Verification Protocol means a methodology developed by the Administrator for calculating the kilowatt hour savings from energy conservation measures and improved unit efficiency measures for the purposes of title IV of the Act.

Construction means fabrication, erection, or installation of a unit or any portion of a unit.

Consumer Price Index or CPI means, for purposes of the Acid Rain Program, the U.S. Department of Labor, Bureau of Labor Statistics unadjusted Consumer Price Index for All Urban Consumers for the U.S. city average, for All Items on the latest reference base, or if such index is no longer published, such other index as the Administrator in his or her discretion determines meets the requirements of the Clean Air Act Amendments of 1990.

(1) *CPI (1990)* means the CPI for all urban consumers for the month of August 1989. The ''CPI (1990)'' is 124.6 (with 1982–1984=100). Beginning in the month for which a new reference base is established, ''CPI (1990)'' will be the CPI value for August 1989 on the new reference base.

(2) *CPI (year)* means the CPI for all urban consumers for the month of August of the previous year.

Continuous emission monitoring system or CEMS means the equipment required by part 75 of this chapter used to sample, analyze, measure, and provide, by readings taken at least once every 15 minutes, a permanent record of emissions, expressed in pounds per hour (lb/hr) for sulfur dioxide and in pounds per million British thermal units (lb/mmBtu) for nitrogen oxides. The following systems are component parts included in a continuous emission monitoring system:

(1) Sulfur dioxide pollutant concentration monitor;

(2) Flow monitor;

(3) Nitrogen oxides pollutant concentration monitors;

(4) Diluent gas monitor (oxygen or carbon dioxide);

(5) A continuous moisture monitor when such monitoring is required by part 75 of this chapter; and

(6) A data acquisition and handling system.

Continuous opacity monitoring system or COMS means the equipment required by part 75 of this chapter to sample, measure, analyze, and provide, with readings taken at least once every 6 minutes, a permanent record of opacity or transmittance. The following systems are component parts included in a continuous opacity monitoring system:

(1) Opacity monitor; and

(2) A data acquisition and handling system.

Control unit means a unit employing a qualifying Phase I technology in accordance with a Phase I extension plan under § 72.42.

Current year subaccount means the subaccount in an Allowance Tracking System general account, established pursuant to § 73.31(c) of this chapter, in which are held allowances that may be transferred to a unit's compliance subaccount for use by the unit for the purpose of meeting its Acid Rain sulfur dioxide emissions limitation.

Customer means a purchaser of electricity not for purposes of transmission or resale.

Decisional body means any EPA employee who is or may reasonably be expected to act in a decision-making role in a proceeding under part 78 of this chapter, including the Administrator, a member of the Environmental Appeals Board, and a Presiding Officer, and any staff of any such person who are participating in the decisional process.

Demand-side measure means a measure:

(1) To improve the efficiency of consumption of electricity from a utility by customers of the utility; or

(2) To reduce the amount of consumption of electricity from a utility by

customers of the utility without increasing the use by the customer of fuel other than: Biomass (i.e., combustible energy-producing materials from biological sources, which include wood, plant residues, biological wastes, landfill gas, energy crops, and eligible components of municipal solid waste), solar, geothermal, or wind resources; or industrial waste gases where the party making the submission involved certifies that there is no net increase in sulfur dioxide emissions from the use of such gases. ''Demand-side measure'' includes the measures listed in part 73, appendix A, section 1 of this chapter.

Designated representative means a responsible natural person authorized by the owners and operators of an affected source and of all affected units at the source or by the owners and operators of a combustion source or process source, as evidenced by a certificate of representation submitted in accordance with subpart B of this part, to represent and legally bind each owner and operator, as a matter of federal law, in matters pertaining to the Acid Rain Program. Whenever the term ''responsible official'' is used in part 70 of this chapter, in any other regulations implementing title V of the Act, or in a State operating permit program, it shall be deemed to refer to the ''designated representative'' with regard to all matters under the Acid Rain Program.

Desulfurization refers to various procedures whereby sulfur is removed from petroleum during or apart from the refining process. ''Desulfurization'' does not include such processes as dilution or blending of low sulfur content diesel fuel with high sulfur content diesel fuel from a diesel refinery not eligible under 40 CFR part 73, subpart G.

Diesel-fired unit means, for the purposes of part 75 of this chapter, an oil-fired unit that combusts diesel fuel as its fuel oil, where the supplementary fuel, if any, shall be limited to natural gas or gaseous fuels containing no more sulfur than natural gas.

Diesel fuel means a low sulfur fuel oil of grades 1–D or 2–D, as defined by the American Society for Testing and Materials standard ASTM D975–91, ''Standard Specification for Diesel Fuel Oils,'' grades 1–GT or 2–GT, as defined by ASTM D2880–90a, ''Standard Specification for Gas Turbine Fuel Oils,'' or grades 1 or 2, as defined by ASTM D396–90, ''Standard Specification for Fuel Oils'' (incorporated by reference in § 72.13).

Diesel reciprocating engine unit means an internal combustion engine that combusts only diesel fuel and that thereby generates electricity through the operation of pistons, rather than by heating steam or water.

Diluent gas means a major gaseous constituent in a gaseous pollutant mixture, which in the case of emissions from fossil fuel-fired units are carbon dioxide and oxygen.

Diluent gas monitor means that component of the continuous emission monitoring system that measures the diluent gas concentration in a unit's flue gas.

Direct public utility ownership means direct ownership of equipment and facilities by one or more corporations, the principal business of which is sale of electricity to the public at retail. Percentage ownership of such equipment and facilities shall be measured on the basis of book value.

Direct Sale Subaccount means a subaccount in the Special Allowance Reserve, as specified in section 416(b) of the Act, which contains Phase II allowances to be sold in the amount of 25,000 per year, from calendar year 1993 to 1999, inclusive, and of 50,000 per year for each year beginning in calendar year 2000, subject to the adjustments noted in the regulations at part 73, subpart E of this chapter.

Dispatch means the assignment within a dispatch system of generating levels to specific units and generators to effect the reliable and economical supply of electricity, as customer demand rises or falls, and includes:

(1) The operation of high-voltage lines, substations, and related equipment; and

(2) The scheduling of generation for the purpose of supplying electricity to other utilities over interconnecting transmission lines.

Dispatch system means either:

(1) A specified unit and generator or specified group of units, and portions of

units, and generators that are interconnected and centrally dispatched, *provided* that the requirements of § 72.33 are met; or

(2) In the event the requirements specified in paragraph (1) of this definition are not met, the unit and generator or group of units and generators that make up one utility system.

Draft Acid Rain permit or draft permit means the version of the Acid Rain permit, or the Acid Rain portion of an operating permit, that a permitting authority offers for public comment.

Dual-fuel reciprocating engine unit means an internal combustion engine that combusts any combination of natural gas and diesel fuel and that thereby generates electricity through the operation of pistons, rather than by heating steam or water.

Emergency fuel means either:

(1) For purposes of the requirements for a fuel flowmeter used in an excepted monitoring system under appendix D or E of part 75 of this chapter, the fuel identified by the designated representative in the unit's monitoring plan as the fuel which is combusted only during emergencies where the primary fuel is not available; or

(2) For purposes of the requirement for stack testing for an excepted monitoring system under appendix E of part 75 of this chapter, the fuel identified in the State, local, or Federal permit for a plant and is identified by the designated representative in the unit's monitoring plan as the fuel which is combusted only during emergencies where the primary fuel is not available, as established in a petition under § 75.66 of this chapter.

Emissions means air pollutants exhausted from a unit or source into the atmosphere, as measured, recorded, and reported to the Administrator by the designated representative and as determined by the Administrator, in accordance with the emissions monitoring requirements of part 75 of this chapter.

Environmental Appeals Board means the three-member board established pursuant to § 1.25(e) of this chapter and authorized to hear appeals pursuant to part 78 of this chapter.

EPA means the United States Environmental Protection Agency.

EPA trial staff means an employee of EPA, whether temporary or permanent, who has been designated by the Administrator to investigate, litigate, and present evidence, arguments, and positions of EPA in any evidentiary hearing under part 78 of this chapter. Any EPA or permitting authority employee, consultant, or contractor who is called as a witness in the evidentiary hearing by EPA trial staff shall be deemed to be ''EPA trial staff''.

Equivalent diameter means a value, calculated using the equation in paragraph 2.1 of Method 1 in part 60, Appendix A of this chapter, and used to determine the upstream and downstream distances for locating CEMS or CEMS components in flues or stacks with rectangular cross sections.

Ex parte communication means any communication, written or oral, relating to the merits of an adjudicatory proceeding under part 78 of this chapter, that was not originally included or stated in the administrative record, in a pleading, or in an evidentiary hearing or oral argument under part 78 of this chapter, between the decisional body and any interested person outside EPA or any EPA trial staff. Ex parte communication shall not include:

(1) Communication between EPA employees other than between EPA trial staff and a member of the decisional body; or

(2) Communication between the decisional body and interested persons outside the Agency, or EPA trial staff, where all parties to the proceeding have received prior written notice of the proposed communication and are given an opportunity to be present and to participate therein.

Excepted monitoring system means a monitoring system that follows the procedures and requirements of appendix D or E of part 75 of this chapter for approved exceptions to the use of continuous emission monitoring systems.

Excess emissions means:

(1) Any tonnage of sulfur dioxide emitted by an affected unit during a calendar year that exceeds the Acid Rain emissions limitation for sulfur dioxide for the unit; and

(2) Any tonnage of nitrogen oxide emitted by an affected unit during a calendar year that exceeds the annual

tonnage equivalent of the Acid Rain emissions limitation for nitrogen oxides applicable to the affected unit taking into account the unit's heat input for the year.

Existing unit means a unit (including a unit subject to section 111 of the Act) that commenced commercial operation before November 15, 1990 and that on or after November 15, 1990 served a generator with nameplate capacity of greater than 25 MWe. ''Existing unit'' does not include simple combustion turbines or any unit that on or after November 15, 1990 served only generators with a nameplate capacity of 25 MWe or less. Any ''existing unit'' that is modified, reconstructed, or repowered after November 15, 1990 shall continue to be an ''existing unit.''

Facility means any institutional, commercial, or industrial structure, installation, plant, source, or building.

File means to send or transmit a document, information, or correspondence to the official custody of the person specified to take possession in accordance with the applicable regulation. Compliance with any ''filing'' deadline shall be determined by the date that person receives the document, information, or correspondence.

Flow meter accuracy means the closeness of the measurement made by a flow meter to the reference value of the fuel flow being measured, expressed as the difference between the measurement and the reference value.

Flow monitor means a component of the continuous emission monitoring system that measures the volumetric flow of exhaust gas.

Flue means a conduit or duct through which gases or other matter are exhausted to the atmosphere.

Flue gas desulfurization system means a type of add-on emission control used to remove sulfur dioxide from flue gas, commonly referred to as a ''scrubber.''

Forced outage means the removal of a unit from service due to an unplanned component failure or other unplanned condition that requires such removal immediately or within 7 days from the onset of the unplanned component failure or condition. For purposes of §§ 72.43, 72.91, and 72.92, ''forced outage'' also includes a partial reduction in the heat input or electrical output due to an unplanned component failure or other unplanned condition that requires such reduction immediately or within 7 days from the onset of the unplanned component failure or condition.

Fossil fuel means natural gas, petroleum, coal, or any form of solid, liquid, or gaseous fuel derived from such material.

Fossil fuel-fired means the combustion of fossil fuel or any derivative of fossil fuel, alone or in combination with any other fuel, independent of the percentage of fossil fuel consumed in any calendar year (expressed in mmBtu).

Fuel oil means any petroleum-based fuel (including diesel fuel or petroleum derivatives such as oil tar) as defined by the American Society for Testing and Materials in ASTM D396–90a, ''Standard Specification for Fuel Oils'' (incorporated by reference in § 72.13), and any recycled or blended petroleum products or petroleum by-products used as a fuel whether in a liquid, solid or gaseous state; *provided* that for purposes of the monitoring requirements of part 75 of this chapter, ''fuel oil'' shall be limited to the petroleum-based fuels for which applicable ASTM methods are specified in Appendices D, E, or F of part 75 of this chapter.

Fuel supply agreement means a legally binding agreement between a new IPP or a firm associated with a new IPP and a fuel supplier that establishes the terms and conditions under which the fuel supplier commits to provide fuel to be delivered to the new IPP.

Future year subaccount means a subaccount in an Allowance Tracking System account, established by the Administrator pursuant to § 73.31 of this chapter, in which allowances are held for one of the 30 years following the later of 1995 or a current calendar year following 1995.

Gas-fired means:

(1) The combustion of:

(i) Natural gas or other gaseous fuel (including coal-derived gaseous fuel), for at least 90.0 percent of the unit's average annual heat input during the previous three calendar years and for at least 85.0 percent of the annual heat input in each of those calendar years; and

(ii) Any fuel other than coal or coal-derived fuel (other than coal-derived gaseous fuel) for the remaining heat input, if any; *provided* that for purposes of part 75 of this chapter, any fuel used other than natural gas, shall be limited to:

(A) Gaseous fuels containing no more sulfur than natural gas; or

(B) Fuel oil.

(2) For purposes of part 75 of this chapter, a unit may initially qualify as gas-fired under the following circumstances:

(i) If the designated representative provides fuel usage data for the unit for the three calendar years immediately prior to submission of the monitoring plan, and if the unit's fuel usage is projected to change on or before January 1, 1995, the designated representative submits a demonstration satisfactory to the Administrator that the unit will qualify as gas-fired under the first sentence of this definition using the years 1995 through 1997 as the three calendar year period; or

(ii) If a unit does not have fuel usage data for one or more of the three calendar years immediately prior to submission of the monitoring plan, the designated representative submits:

(A) The unit's designed fuel usage;

(B) Any fuel usage data, beginning with the unit's first calendar year of commercial operation following 1992;

(C) The unit's projected fuel usage for any remaining future period needed to provide fuel usage data for three consecutive calendar years; and

(D) Demonstration satisfactory to the Administrator that the unit will qualify as gas-fired under the first sentence of this definition using those three consecutive calendar years as the three calendar year period.

Gaseous fuel means a material that is in the gaseous state at standard atmospheric temperature and pressure conditions and that is combusted to produce heat.

General account means an Allowance Tracking System account that is not a unit account.

Generator means a device that produces electricity and was or would have been required to be reported as a generating unit pursuant to the United States Department of Energy Form 860 (1990 edition).

Generator Output capacity means the full-load continuous rating of a generator under specific conditions as designed by the manufacturer.

Hearing clerk means an EPA employee designated by the Administrator to establish a repository for all books, records, documents, and other materials relating to proceedings under part 78 of this chapter.

Heat input means the product (expressed in mmBtu/time) of the gross calorific value of the fuel (expressed in Btu/lb) and the fuel feed rate into the combustion device (expressed in mass of fuel/time) and does not include the heat derived from preheated combustion air, recirculated flue gases, or exhaust from other sources.

Hour before and after means, for purposes of the missing data substitution procedures of part 75 of this chapter, the quality-assured hourly SO_2 or CO_2 concentration, hourly flow rate, or hourly NO_X emission rate recorded by a certified monitor during the unit operating hour immediately before and the unit operating hour immediately after a missing data period.

Hybrid generation facility means a plant that generates electrical energy derived from a combination of qualified renewable energy (wind, solar, biomass, or geothermal) and one or more other energy resources.

Independent auditor means a professional engineer who is not an employee or agent of the source being audited.

Independent Power Production Facility (IPP) means a source that:

(1) Is nonrecourse project financed, as defined by the Secretary of Energy at 10 CFR part 715;

(2) Is used for the generation of electricity, eighty percent or more of which is sold at wholesale; and

(3) Is a new unit required to hold allowances under Title IV of the Clean Air Act; but only if direct public utility ownership of the equipment comprising the facility does not exceed 50 percent.

Interested person means any person who submitted written comments or testified at a public hearing on the draft permit or other matter subject to notice and comment under the Acid

Rain Program or any person who submitted his or her name to the Administrator or the permitting authority, as appropriate, to be placed on a list of persons interested in such matter. The Administrator or the permitting authority may update the list of interested persons from time to time by requesting additional written indication of continued interest from the persons listed and may delete from the list the name of any person failing to respond as requested.

Investor-owned utility means a utility that is organized as a tax-paying for-profit business.

Kilowatthour saved or *savings* means the net savings in electricity use (expressed in Kwh) that result directly from a utility's energy conservation measures or programs.

Least-cost plan or *least-cost planning process* means an energy conservation and electric power planning methodology meeting the requirements of § 73.82(a)(4) of this chapter.

Life-of-the-unit, firm power contractual arrangement means a unit participation power sales agreement under which a utility or industrial customer reserves, or is entitled to receive, a specified amount or percentage of nameplate capacity and associated energy generated by any specified generating unit and pays its proportional amount of such unit's total costs, pursuant to a contract:

(1) For the life of the unit;

(2) For a cumulative term of no less than 30 years, including contracts that permit an election for early termination; or

(3) For a period equal to or greater than 25 years or 70 percent of the economic useful life of the unit determined as of the time the unit was built, with option rights to purchase or release some portion of the nameplate capacity and associated energy generated by the unit at the end of the period.

Mail or serve by mail means to submit or serve by means other than personal service.

Maximum potential NO_X emission rate means the emission rate of nitrogen oxides (in lb/mmBtu) calculated in accordance with section 3 of appendix F of part 75 of this chapter, using the maximum potential nitrogen oxides concentration as defined in section 2 of appendix A of part 75 of this chapter, and either the maximum oxygen concentration (in percent O_2) or the minimum carbon dioxide concentration (in percent CO_2) under all operating conditions of the unit except for unit start-up, shutdown, and upsets.

Missing data period means the total number of consecutive hours during which any component part of a certified CEMS or approved alternative monitoring system is not providing quality-assured data, regardless of the reason.

Monitor accuracy means the closeness of the measurement made by a CEMS or by one of its component parts to the reference value of the emissions or volumetric flow being measured, expressed as the difference between the measurement and the reference value.

Monitor operating hour means any unit operating hour or portion thereof over which a CEMS, or other monitoring system approved by the Administrator under part 75 of this chapter is operating, regardless of the number of measurements (i.e., data points) collected during the hour or portion of an hour.

Most stringent federally enforceable emissions limitation means the most stringent emissions limitation for a given pollutant applicable to the unit, which has been approved by the Administrator under the Act, whether in a State implementation plan approved pursuant to title I of the Act, a new source performance standard, or otherwise. To determine the most stringent emissions limitation for sulfur dioxide, each limitation shall be converted to lbs/mmBtu, using the appropriate conversion factors in appendix B of this part; *provided* that for determining the most stringent emissions limitation for sulfur dioxide for 1985, each limitation shall also be annualized, using the appropriate annualization factors in appendix A of this part.

Multi-header generator means a generator served by ductwork from more than one unit.

Multi-header unit means a unit with ductwork serving more than one generator.

Nameplate capacity means the maximum electrical generating output (expressed in MWe) that a generator can sustain over a specified period of time when not restricted by seasonal or other deratings, as listed in the NADB under the data field ''NAMECAP'' if the generator is listed in the NADB or as measured in accordance with the United States Department of Energy standards if the generator is not listed in the NADB.

National Allowance Data Base or *NADB* means the data base established by the Administrator under section 402(4)(C) of the Act.

Natural gas means a naturally occurring fluid mixture of hydrocarbons (e.g., methane, ethane, or propane) containing 1 grain or less hydrogen sulfide per 100 standard cubic feet, and 20 grains or less total sulfur per 100 standard cubic feet), produced in geological formations beneath the Earth's surface, and maintaining a gaseous state at standard atmospheric temperature and pressure under ordinary conditions.

NERC region means the North American Electric Reliability Council region or, if any, subregion.

Net income neutrality means, in the case of energy conservation measures undertaken by an investor-owned utility whose rates are regulated by a State utility regulatory authority, rates and charges established by the State utility regulatory authority that ensure that the net income earned by the utility on its State-jurisdictional equity investment will be *no lower* as a consequence of its expenditures on cost-effective qualified energy conservation measures and any associated lost sales than it would have been had the utility not made such expenditures, or that the State utility regulatory authority has implemented a ratemaking approach designed to meet this objective.

New independent power production facility or *new IPP* means a unit that:

(1) Commences commercial operation on or after November 15, 1990;

(2) Is nonrecourse project-financed, as defined in 10 CFR part 715;

(3) Sells 80% of electricity generated at wholesale; and

(4) Does not sell electricity to any affiliate or, if it does, demonstrates it cannot obtain the required allowances from such an affiliate.

New unit means a unit that commences commercial operation on or after November 15, 1990, including any such unit that serves a generator with a nameplate capacity of 25 MWe or less or that is a simple combustion turbine.

Ninetieth (90th) percentile means a value that would divide an ordered set of increasing values so that at least 90 percent are less than or equal to the value and at least 10 percent are greater than or equal to the value.

Ninety-fifth (95th) percentile means a value that would divide an ordered set of increasing values so that at least 95 percent of the set are less than or equal to the value and at least 5 percent are greater than or equal to the value.

NIST/EPA-approved certified reference material or NIST/EPA-approved CRM means a calibration gas mixture that has been approved by EPA and the National Institutes of Standards and Technologies (NIST) as having specific known chemical or physical property values certified by a technically valid procedure as evidenced by a certificate or other documentation issued by a certifying standard-setting body.

NIST traceable reference material (NTRM) means a calibration gas mixture tested by and certified by the National Institutes of Standards and Technologies (NIST) to have a certain specified concentration of gases. NTRMs may have different concentrations from those of standard reference materials.

Offset plan means a plan pursuant to part 77 of this chapter for offsetting excess emissions of sulfur dioxide that have occurred at an affected unit in any calendar year.

Oil-fired means:

(1) The combustion of:

(i) Fuel oil for more than 10.0 percent of the average annual heat input during the previous three calendar years or for more than 15.0 percent of the annual heat input during any one of those calendar years; and

(ii) Any solid, liquid, or gaseous fuel (including coal-derived gaseous fuel), other than coal or any other coal derived fuel, for the remaining heat

input, if any; provided that for purposes of part 75 of this chapter, any fuel used other than fuel oil shall be limited to gaseous fuels containing no more sulfur than natural gas.

(2) For purposes of part 75 of this chapter, a unit that does not have fuel usage data for one or more of the three calendar years immediately prior to submission of the monitoring plan may initially qualify as oil-fired under the following circumstances: the designated representative submits:

(i) Unit design fuel usage,

(ii) The unit's designed fuel usage,

(iii) Any fuel usage data, beginning with the unit's first calendar year of commercial operation following 1992,

(iv) The unit's projected fuel usage for any remaining future period needed to provide fuel usage data for three consecutive calendar years, and

(v) A demonstration satisfactory to the Administrator that the unit will qualify as oil-fired under the first sentence of this definition using those three consecutive calendar years as the three calendar year period.

Opacity means the degree to which emissions reduce the transmission of light and obscure the view of an object in the background.

Operating when referring to a combustion or process source seeking entry into the Opt-in Program, means that the source had documented consumption of fuel input for more than 876 hours in the 6 months immediately preceding the submission of a combustion source's opt-in application under § 74.16(a) of this chapter.

Operating permit means a permit issued under part 70 of this chapter and any other regulations implementing title V of the Act.

Opt in or opt into means to elect to become an affected unit under the Acid Rain Program through the issuance of the final effective opt-in permit under § 74.14 of this chapter.

Opt-in permit means the legally binding written document that is contained within the Acid Rain permit and sets forth the requirements under part 74 of this chapter for a combustion source or a process source that opts into the Acid Rain Program.

Opt-in source means a combustion source or process source that has elected to become an affected unit under the Acid Rain Program and whose opt-in permit has been issued and is in effect.

Out-of-control period means any period:

(1) Beginning with the hour corresponding to the completion of a daily calibration error, linearity check, or quality assurance audit that indicates that the instrument is not measuring and recording within the applicable performance specifications; and

(2) Ending with the hour corresponding to the completion of an additional calibration error, linearity check, or quality assurance audit following corrective action that demonstrates that the instrument is measuring and recording within the applicable performance specifications.

Oversubscription payment deadline means 30 calendar days prior to the allowance transfer deadline.

Owner means any of the following persons:

(1) Any holder of any portion of the legal or equitable title in an affected unit or in a combustion source or process source; or

(2) Any holder of a leasehold interest in an affected unit or in a combustion source or process source; or

(3) Any purchaser of power from an affected unit or from a combustion source or process source under a life-of-the-unit, firm power contractual arrangement as the term is defined herein and used in section 408(i) of the Act. However, unless expressly provided for in a leasehold agreement, owner shall not include a passive lessor, or a person who has an equitable interest through such lessor, whose rental payments are not based, either directly or indirectly, upon the revenues or income from the affected unit; or

(4) With respect to any Allowance Tracking System general account, any person identified in the submission required by § 73.31(c) of this chapter that is subject to the binding agreement for the authorized account representative to represent that person's ownership interest with respect to allowances.

Owner or operator means any person who is an owner or who operates, controls, or supervises an affected unit, affected source, combustion source, or process source and shall include, but

not be limited to, any holding company, utility system, or plant manager of an affected unit, affected source, combustion source, or process source.

Ozone nonattainment area means an area designated as a nonattainment area for ozone under subpart C of part 81 of this chapter.

Ozone transport region means the ozone transport region designated under Section 184 of the Act.

Peaking unit means:

(1) A unit that has:

(i) An average capacity factor of no more than 10.0 percent during the previous three calendar years and

(ii) A capacity factor of no more than 20.0 percent in each of those calendar years.

(2) For purposes of part 75 of this chapter, a unit may initially qualify as a peaking unit under the following circumstances:

(i) If the designated representative provides capacity factor data for the unit for the three calendar years immediately prior to submission of the monitoring plan and if the unit's capacity factor is projected to change on or before the certification deadline for NO_X monitoring in § 75.4 of this chapter, the designated representative submits a demonstration satisfactory to the Administrator that the unit will qualify as a peaking unit under the first sentence of this definition using the three calendar years beginning with the year of the certification deadline for NO_X monitoring in § 75.4 of this chapter (either 1995 or 1996) as the three year period; or

(ii) If the unit does not have capacity factor data for any one or more of the three calendar years immediately prior to submission of the monitoring plan, the designated representative submits:

(A) Any capacity factor data, beginning with the unit's first calendar year of commercial operation following the first year of the three calendar years immediately prior to the certification deadline for NO_X monitoring in § 75.4 of this chapter (either 1992 or 1993),

(B) Capacity factor information for the unit for any remaining future period needed to provide capacity factor data for three consecutive calendar years, and

(C) A demonstration satisfactory to the Administrator that the unit will qualify as a peaking unit under the first sentence of this definition using the three consecutive calendar years specified in (2) (ii) (A) and (B) as the three calendar year period.

Permit revision means a permit modification, fast track modification, administrative permit amendment, or automatic permit amendment, as provided in subpart H of this part.

Permitting authority means either:

(1) The Administrator in the case of issuance and administration of Acid Rain permits; or

(2) The State air pollution control agency, local agency, other State agency, or other agency authorized by the Administrator to issue proposed Acid Rain permits under subpart G of this part and the other regulations promulgated pursuant to titles IV and V of the Act.

Person includes an individual, corporation, partnership, association, State, municipality, political subdivision of a State, any agency, department, or instrumentality of the United States, and any officer, agent, or employee thereof.

Phase I means the Acid Rain Program period beginning January 1, 1995 and ending December 31, 1999.

Phase I unit means any affected unit, except an affected unit under part 74 of this chapter, that is subject to an Acid Rain emissions reduction requirement or Acid Rain emissions limitations beginning in Phase I.

Phase II means the Acid Rain Program period beginning January 1, 2000, and continuing into the future thereafter.

Phase II unit means any affected unit, except an affected unit under part 74 of this chapter, that is subject to an Acid Rain emissions reduction requirement or Acid Rain emissions limitation during Phase II only.

Pipeline natural gas means natural gas that is provided by a supplier through a pipeline.

Pollutant concentration monitor means that component of the continuous emission monitoring system that measures the concentration of a pollutant in a unit's flue gas.

Potential electrical output capacity means the MWe capacity rating for the units which shall be equal to 33 percent of the maximum design heat input capacity of the steam generating unit, as calculated according to appendix D of part 72.

Power distribution system means the portion of an electricity grid owned or operated by a utility that is dedicated to delivering electric energy to customers.

Power purchase commitment means a commitment or obligation of a utility to purchase electric power from a facility pursuant to:

(1) A power sales agreement;

(2) A state regulatory authority order requiring a utility to:

(i) Enter into a power sales agreement with the facility;

(ii) Purchase from the facility; or

(iii) Enter into arbitration concerning the facility for the purpose of establishing terms and conditions of the utility's purchase of power;

(3) A letter of intent or similar instrument committing to purchase power (actual electrical output or generator output capacity) from the source at a previously offered or lower price and a power sales agreement applicable to the source is executed within the time frame established by the terms of the letter of intent but no later than November 15, 1992 or, where the letter of intent does not specify a timeframe, a power sales agreement applicable to the source is executed on or before November 15, 1992; or

(4) A utility competitive bid solicitation that has resulted in the selection of the qualifying facility or independent power production facility as the winning bidder.

Power sales agreement is a legally binding agreement between a QF, IPP, new IPP, or firm associated with such facility and a regulated electric utility that establishes the terms and conditions for the sale of power from the facility to the utility.

Presiding Officer means an Administrative Law Judge appointed under 5 U.S.C. 3105 and designated to preside at a hearing in an appeal under part 78 of this chapter or an EPA lawyer designated to preside at any such hearing under § 78.6(b)(3)(ii) of this chapter.

Primary fuel or primary fuel supply means the main fuel type (expressed in mmBtu) consumed by an affected unit for the applicable calendar year.

Proposed Acid Rain permit or proposed permit means, in the case of a State operating permit program, the version of an Acid Rain permit that the permitting authority submits to the Administrator after the public comment period, but prior to completion of the EPA permit review period, as provided for in part 70 of this chapter.

Protocol 1 gas means a calibration gas mixture prepared and analyzed according to the ''Procedure for NBS-Traceable Certification of Compressed Gas Working Standards Used for Calibration and Audit of Continuous Emission Monitors (''Revised Traceability Protocol No. 1''),'' Quality Assurance Handbook for Air Pollution Measurement Systems, Volume III, Stationary Source Specific Methods, Section 3.04, EPA–600/4–77–027b, June 1987 (set forth in Appendix H of part 75 of this chapter) or such revised procedure as approved by the Administrator.

Qualifying facility (QF) means a ''qualifying small power production facility'' within the meaning of section 3(17)(C) of the Federal Power Act or a ''qualifying cogeneration facility'' within the meaning of section 3(18)(B) of the Federal Power Act.

Qualifying Phase I technology means a technological system of continuous emission reduction that is demonstrated to achieve a ninety (90) percent (or greater) reduction in emissions of sulfur dioxide from the emissions that would have resulted from the use of fossil fuels that were not subject to treatment prior to combustion, as provided in § 72.42.

Qualifying power purchase commitment means a power purchase commitment in effect as of November 15, 1990 without regard to changes to that commitment so long as:

(1) The identity of the electric output purchaser; or

(2) The identity of the steam purchaser and the location of the facility, remain unchanged as of the date the facility commences commercial operation; and

(3) The terms and conditions of the power purchase commitment are not

changed in such a way as to allow the costs of compliance with the Acid Rain Program to be shifted to the purchaser.

Qualifying repowering technology means:

(1) Replacement of an existing coal-fired boiler with one of the following clean coal technologies: Atmospheric or pressurized fluidized bed combustion, integrated gasification combined cycle, magnetohydrodynamics, direct and indirect coal-fired turbines, integrated gasification fuel cells, or as determined by the Administrator, in consultation with the Secretary of Energy, a derivative of one or more of these technologies, and any other technology capable of controlling multiple combustion emissions simultaneously with improved boiler or generation efficiency and with significantly greater waste reduction relative to the performance of technology in widespread commercial use as of the date of enactment of the Clean Air Act Amendments of 1990; or

(2) Any oil- or gas-fired unit that has been awarded clean coal technology demonstration funding as of January 1, 1991, by the Department of Energy.

Quality-assured monitor operating hour means any unit operating hour or portion thereof over which a certified CEMS, or other monitoring system approved by the Administrator under part 75 of this chapter, is operating:

(1) Within the performance specifications set forth in part 75, appendix A of this chapter and the quality assurance/quality control procedures set forth in part 75, appendix B of this chapter, without unscheduled maintenance, repair, or adjustment; and

(2) In accordance with § 75.10(d), (e), and (f) of this chapter.

Receive or receipt of means the date the Administrator or a permitting authority comes into possession of information or correspondence (whether sent in writing or by authorized electronic transmission), as indicated in an official correspondence log, or by a notation made on the information or correspondence, by the Administrator or the permitting authority in the regular course of business.

Recordation, record, or recorded means, with regard to allowances, the transfer of allowances by the Administrator from one Allowance Tracking System account or subaccount to another.

Reduced utilization means a reduction, during any calendar year in Phase I, in the heat input (expressed in mmBtu for the calendar year) at a Phase I unit below the unit's baseline, where such reduction subjects the unit to the requirement to submit a reduced utilization plan under § 72.43; or, in the case of an opt-in source, means a reduction in the average utilization, as specified in § 74.44 of this chapter, of an opt-in source below the opt-in source's baseline.

Reference method means any direct test method of sampling and analyzing for an air pollutant as specified in part 60, appendix A of this chapter.

Reference value or reference signal means the known concentration of a calibration gas, the known value of an electronic calibration signal, or the known value of any other measurement standard approved by the Administrator, assumed to be the true value for the pollutant or diluent concentration or volumetric flow being measured.

Relative accuracy means a statistic designed to provide a measure of the systematic and random errors associated with data from continuous emission monitoring systems, and is expressed as the absolute mean difference between the pollutant concentration or volumetric flow measured by the pollutant concentration or flow monitor and the value determined by the applicable reference method(s) plus the 2.5 percent error confidence coefficient of a series of tests divided by the mean of the reference method tests in accordance with part 75 of this chapter.

Replacement unit means an affected unit replacing the thermal energy provided by an opt-in source, where both the affected unit and the opt-in source are governed by a thermal energy plan.

Research gas material (RGM) means a calibration gas mixture developed by agreement of a requestor and the National Institutes for Standards and Technologies (NIST) that NIST analyzes and certifies as ''NIST traceable.'' RGMs may have concentrations different from those of standard reference materials.

Schedule of compliance means an enforceable sequence of actions, measures, or operations designed to achieve or maintain compliance, or correct non-compliance, with an applicable requirement of the Acid Rain Program, including any applicable Acid Rain permit requirement.

Secretary of Energy means the Secretary of the United States Department of Energy or the Secretary's duly authorized representative.

Serial number means, when referring to allowances, the unique identification number assigned to each allowance by the Administrator, pursuant to § 73.34(d) of this chapter.

Simple combustion turbine means a unit that is a rotary engine driven by a gas under pressure that is created by the combustion of any fuel. This term includes combined cycle units without auxiliary firing. This term excludes combined cycle units with auxiliary firing, unless the unit did not use the auxiliary firing from 1985 through 1987 and does not use auxiliary firing at any time after November 15, 1990.

Site lease, as used in part 73, subpart E of this chapter, means a legally-binding agreement signed between a new IPP or a firm associated with a new IPP and a site owner that establishes the terms and conditions under which the new IPP or the firm associated with the new IPP has the binding right to utilize a specific site for the purposes of operating or constructing the new IPP.

Small diesel refinery means a domestic motor diesel fuel refinery or portion of a refinery that, as an annual average of calendar years 1988 through 1990 and as reported to the Department of Energy on Form 810, had bona fide crude oil throughput less than 18,250,000 barrels per year, and the refinery or portion of a refinery is owned or controlled by a refiner with a total combined bona fide crude oil throughput of less than 50,187,500 barrels per year.

Solid waste incinerator means a source as defined in section 129(g)(1) of the Act.

Source means any governmental, institutional, commercial, or industrial structure, installation, plant, building, or facility that emits or has the potential to emit any regulated air pollutant under the Act. For purposes of section 502(c) of the Act, a ''source'', including a ''source'' with multiple units, shall be considered a single ''facility.''

Span means the range of values that a monitor component is required to be capable of measuring under part 75 of this chapter.

Spot allowance means an allowance that may be used for purposes of compliance with a unit's Acid Rain sulfur dioxide emissions limitation requirements beginning in the year in which the allowance is offered for sale.

Spot auction means an auction of a spot allowance.

Spot sale means a sale of a spot allowance.

Stack means a structure that includes one or more flues and the housing for the flues.

Standard conditions means 68 °F at 1 atm (29.92 in. of mercury).

Standard reference material or *SRM* means a calibration gas mixture issued and certified by NIST as having specific known chemical or physical property values.

State means one of the 48 contiguous States and the District of Columbia and includes any non-federal authorities, including local agencies, interstate associations, and State-wide agencies with approved State operating permit programs. The term ''State'' shall have its conventional meaning where such meaning is clear from the context.

State operating permit program means an operating permit program that the Administrator has approved as meeting the requirements of titles IV and V of the Act, part 70 of this chapter, and this part, including subpart G of this part.

Stationary gas turbine means a turbine that is not self-propelled and that combusts natural gas, other gaseous fuel with a sulfur content no greater than natural gas, or fuel oil in order to heat inlet combustion air and thereby turn a turbine, in addition to or instead of producing steam or heating water.

Steam sales agreement is a legally binding agreement between a QF, IPP, new IPP, or firm associated with such facility and an industrial or commercial establishment requiring steam

that establishes the terms and conditions under which the facility will supply steam to the establishment.

Submit or serve means to send or transmit a document, information, or correspondence to the person specified in accordance with the applicable regulation:

(1) In person;

(2) By United States Postal Service certified mail with the official postmark or, if service is by the Administrator or the permitting authority, by any other mail service by the United States Postal Service; or

(3) By other means with an equivalent time and date mark used in the regular course of business to indicate the date of dispatch or transmission and a record of prompt delivery. Compliance with any ''submission'', ''service'', or ''mailing'' deadline shall be determined by the date of dispatch, transmission, or mailing and not the date of receipt.

Substitute data means emissions or volumetric flow data provided to assure 100 percent recording and reporting of emissions when all or part of the continuous emission monitoring system is not functional or is operating outside applicable performance specifications.

Substitution unit means an affected unit, other than a unit under section 410 of the Act, that is designated as a Phase I unit in a substitution plan under § 72.41.

Sulfur-free generation means the generation of electricity by a process that does not have any emissions of sulfur dioxide, including hydroelectric, nuclear, solar, or wind generation. A ''sulfur-free generator'' is a generator that is located in one of the 48 contiguous States or the District of Columbia and produces ''sulfur-free generation.''

Supply-side measure means a measure to improve the efficiency of the generation, transmission, or distribution of electricity, implemented by a utility in connection with its operations or facilities to provide electricity to its customers, and includes the measures set forth in part 73, appendix A, section 2 of this chapter.

Thermal energy means the thermal output produced by a combustion source used directly as part of a manufacturing process but not used to produce electricity.

Ton or tonnage means any ''short ton'' (i.e., 2,000 pounds). For the purpose of determining compliance with the Acid Rain emissions limitations and reduction requirements, total tons for a year shall be calculated as the sum of all recorded hourly emissions (or the tonnage equivalent of the recorded hourly emissions rates) in accordance with part 75 of this chapter, with any remaining fraction of a ton equal to or greater than 0.50 ton deemed to equal one ton and any fraction of a ton less than 0.50 ton deemed not to equal any ton.

Total planned net output capacity means the planned generator output capacity, excluding that portion of the electrical power which is designed to be used at the power production facility, as specified under one or more qualifying power purchase commitments or contemporaneous documents as of November 15, 1990; ''Total installed net output capacity'' shall be the generator output capacity, excluding that portion of the electrical power actually used at the power production facility, as installed.

Transfer unit means a Phase I unit that transfers all or part of its Phase I emission reduction obligations to a control unit designated pursuant to a Phase I extension plan under § 72.42.

Underutilization means a reduction, during any calendar year in Phase I, of the heat input (expressed in mmBtu for the calendar year) at a Phase I unit below the unit's baseline.

Unit means a fossil fuel-fired combustion device.

Unit account means an Allowance Tracking System account, established by the Administrator for an affected unit pursuant to § 73.31 (a) or (b) of this chapter.

Unit load means the total (i.e., gross) output of a unit or source in any calendar year (or other specified time period) produced by combusting a given heat input of fuel, expressed in terms of:

(1) The total electrical generation (MWe) for use within the plant and for sale; or

(2) In the case of a unit or source that uses part of its heat input for purposes other than electrical generation, the total steam pressure (psia) produced by the unit or source.

Unit operating day means a calendar day in which a unit combusts any fuel.

Unit operating hour means any hour (or fraction of an hour) during which a unit combusts any fuel.

Unit operating quarter means a calendar quarter in which a unit combusts any fuel.

Utility means any person that sells electricity.

Utility competitive bid solicitation is a public request from a regulated utility for offers to the utility for meeting future generating needs. A qualifying facility, independent power production facility, or new IPP may be regarded as having been ''selected'' in such solicitation if the utility has named the facility as a project with which the utility intends to negotiate a power sales agreement.

Utility regulatory authority means an authority, board, commission, or other entity (limited to the local-, State-, or federal-level, whenever so specified) responsible for overseeing the business operations of utilities located within its jurisdiction, including, but not limited to, utility rates and charges to customers.

Utility system means all interconnected units and generators operated by the same utility operating company.

Utility unit means a unit owned or operated by a utility:

(1) That serves a generator in any State that produces electricity for sale, or

(2) That during 1985, served a generator in any State that produced electricity for sale.

(3) Notwithstanding paragraphs (1) and (2) of this definition, a unit that was in operation during 1985, but did not serve a generator that produced electricity for sale during 1985, and did not commence commercial operation on or after November 15, 1990 is not a utility unit for purposes of the Acid Rain Program.

(4) Notwithstanding paragraphs (1) and (2) of this definition, a unit that cogenerates steam and electricity is not a utility unit for purposes of the Acid Rain Program, unless the unit is constructed for the purpose of supplying, or commences construction after November 15, 1990 and supplies, more than one-third of its potential electrical output capacity and more than 25 MWe output to any power distribution system for sale.

Utilization means the heat input (expressed in mmBtu/time) for a unit.

Volumetric flow means the rate of movement of a specified volume of gas past a cross-sectional area (e.g., cubic feet per hour).

Zero air material means either: (1) a calibration gas certified by the gas vendor not to contain concentrations of either SO_2, NO_X, or total hydrocarbons above 0.1 parts per million (ppm); a concentration of CO above 1 ppm; and a concentration of CO_2 above 400 ppm, or (2) ambient air conditioned and purified by a continuous emission monitoring system for which the continuous emission monitoring system manufacturer or vendor certifies that the particular continuous emission monitoring system model produces conditioned gas that does not contain concentrations of either SO_2 or NO_X above 0.1 ppm or CO_2 above 400 ppm; and that does not contain concentrations of other gases that interfere with instrument readings or cause the instrument to read concentrations of SO_2, NO_X, or CO_2 for a particular continuous emission monitoring system model.

[58 FR 3650, Jan. 11, 1993, as amended at 58 FR 15647, Mar. 23, 1993; 58 FR 33770, June 21, 1993; 58 FR 40747, July 30, 1993; 60 FR 17111, Apr. 4, 1995; 60 FR 18468, Apr. 11, 1995; 60 FR 26514, May 17, 1995]

§ 72.3 Measurements, abbreviations, and acronyms.

Measurements, abbreviations, and acronyms used in this part are defined as follows:

acfh—actual cubic feet per hour.
atm—atmosphere.
bbl—barrel.
Btu—British thermal unit.
°C—degree Celsius (centigrade).
cfm—cubic feet per minute.
cm—centimeter.
dcf—dry cubic feet.
DOE—Department of Energy.

dscf—dry cubic feet at standard conditions.
dscfh—dry cubic feet per hour at standard conditions.
EIA—Energy Information Administration.
eq—equivalent.
°F—degree Fahrenheit.
fps—feet per second.
gal—gallon.
hr—hour.
in—inch.
°K—degree Kelvin.
Kwh—kilowatt hour.
lb—pounds.
m—meter.
mmBtu—million Btu.
min—minute.
mol. wt.—molecular weight.
MWe—megawatt electrical.
MWge—gross megawatt electrical.
ppm—parts per million.
psi—pounds per square inch.
°R—degree Rankine.
scf—cubic feet at standard conditions.
scfh—cubic feet per hour at standard conditions.
sec—second.
std—at standard conditions.
CO_2—carbon dioxide.
NO_x—nitrogen oxides.
O_2—oxygen.
THC—total hydrocarbon content.
SO_2—sulfur dioxide.

§ 72.4 Federal authority.

(a) The Administrator reserves all authority under sections 112(r)(9), 113, 114, 120, 301, 303, 304, 306, and 307(a) of the Act, including, but not limited to, the authority to:

(1) Secure information needed for the purpose of developing, revising, or implementing, or of determining whether any person is in violation of, any standard, method, requirement, or prohibition of the Act, this part, parts 73, 74, 75, 76, 77, and 78 of this chapter;

(2) Make inspections, conduct tests, examine records, and require an owner or operator of an affected unit to submit information reasonably required for the purpose of developing, revising, or implementing, or of determining whether any person is in violation of, any standard, method, requirement, or prohibition of the Act, this part, parts 73, 74, 75, 76, 77, and 78 of this chapter.

(3) Issue orders, call witnesses, and compel the production of documents.

(b) The Administrator reserves the right under title IV of the Act to take any action necessary to protect the orderly and competitive functioning of the allowance system, including actions to prevent fraud and misrepresentation.

[58 FR 3650, Jan. 11, 1993, as amended at 60 FR 17113, Apr. 4, 1995]

§ 72.5 State authority.

Consistent with section 116 of the Act, the provisions of the Acid Rain Program shall not be construed in any manner to preclude any State from adopting and enforcing any other air quality requirement (including any continuous emissions monitoring) that is not less stringent than, and does not alter, any requirement applicable to an affected unit or affected source under the Acid Rain Program; *provided* that such State requirement, if articulated in an operating permit, is in a portion of the operating permit separate from the portion containing the Acid Rain Program requirements.

§ 72.6 Applicability.

(a) Each of the following units shall be an affected unit, and any source that includes such a unit shall be an affected source, subject to the requirements of the Acid Rain Program:

(1) A unit listed in Table 1 of § 73.10(a) of this chapter.

(2) A unit that is listed in Table 2 or 3 of § 73.10 of this chapter and any other existing utility unit, except a unit under paragraph (b) of this section.

(3) A utility unit, except a unit under paragraph (b) of this section, that:

(i) Is a new unit; or

(ii) Did not serve a generator with a nameplate capacity greater than 25 MWe on November 15, 1990 but serves such a generator after November 15, 1990.

(iii) Was a simple combustion turbine on November 15, 1990 but adds or uses auxiliary firing after November 15, 1990;

(iv) Was an exempt cogeneration facility under paragraph (b)(4) of this section but during any three calendar year period after November 15, 1990 sold, to a utility power distribution

system, an annual average of more than one-third of its potential electrical output capacity and more than 219,000 MWe-hrs electric output, on a gross basis;

(v) Was an exempt qualifying facility under paragraph (b)(5) of this section but, at any time after the later of November 15, 1990 or the date the facility commences commercial operation, fails to meet the definition of qualifying facility;

(vi) Was an exempt IPP under paragraph (b)(6) of this section but, at any time after the later of November 15, 1990 or the date the facility commences commercial operation, fails to meet the definition of independent power production facility; or

(vii) Was an exempt solid waste incinerator under paragraph (b)(7) of this section but during any three calendar year period after November 15, 1990 consumes 20 percent or more (on a Btu basis) fossil fuel.

(b) The following types of units are not affected units subject to the requirements of the Acid Rain Program:

(1) A simple combustion turbine that commenced operation before November 15, 1990.

(2) Any unit that commenced commercial operation before November 15, 1990 and that did not, as of November 15, 1990, and does not currently, serve a generator with a nameplate capacity of greater than 25 MWe.

(3) Any unit that, during 1985, did not serve a generator that produced electricity for sale and that did not, as of November 15, 1990, and does not currently, serve a generator that produces electricity for sale.

(4) A cogeneration facility which:

(i) For a unit that commenced construction on or prior to November 15, 1990, was constructed for the purpose of supplying equal to or less than one-third its potential electrical output capacity or equal to or less than 219,000 MWe-hrs actual electric output on an annual basis to any utility power distribution system for sale (on a gross basis). If the purpose of construction is not known, the Administrator will presume that actual operation from 1985 through 1987 is consistent with such purpose. However, if in any three calendar year period after November 15, 1990, such unit sells to a utility power distribution system an annual average of more than one-third of its potential electrical output capacity and more than 219,000 MWe-hrs actual electric output (on a gross basis), that unit shall be an affected unit, subject to the requirements of the Acid Rain Program; or

(ii) For units which commenced construction after November 15, 1990, supplies equal to or less than one-third its potential electrical output capacity or equal to or less than 219,000 MWe-hrs actual electric output on an annual basis to any utility power distribution system for sale (on a gross basis). However, if in any three calendar year period after November 15, 1990, such unit sells to a utility power distribution system an annual average of more than one-third of its potential electrical output capacity and more than 219,000 MWe-hrs actual electric output (on a gross basis), that unit shall be an affected unit, subject to the requirements of the Acid Rain Program.

(5) A qualifying facility that:

(i) Has, as of November 15, 1990, one or more qualifying power purchase commitments to sell at least 15 percent of its total planned net output capacity; and

(ii) Consists of one or more units designated by the owner or operator with total installed net output capacity not exceeding 130 percent of the total planned net output capacity. If the emissions rates of the units are not the same, the Administrator may exercise discretion to designate which units are exempt.

(6) An independent power production facility that:

(i) Has, as of November 15, 1990, one or more qualifying power purchase commitments to sell at least 15 percent of its total planned net output capacity; and

(ii) Consists of one or more units designated by the owner or operator with total installed net output capacity not exceeding 130 percent of its total planned net output capacity. If the emissions rates of the units are not the same, the Administrator may exercise discretion to designate which units are exempt.

(7) A solid waste incinerator, if more than 80 percent (on a Btu basis) of the annual fuel consumed at such incinerator is other than fossil fuels. For solid waste incinerators which began operation before January 1, 1985, the average annual fuel consumption of non-fossil fuels for calendar years 1985 through 1987 must be greater than 80 percent for such an incinerator to be exempt. For solid waste incinerators which began operation after January 1, 1985, the average annual fuel consumption of non-fossil fuels for the first three years of operation must be greater than 80 percent for such an incinerator to be exempt. If, during any three calendar year period after November 15, 1990, such incinerator consumes 20 percent or more (on a Btu basis) fossil fuel, such incinerator will be an affected source under the Acid Rain Program.

(8) A non-utility unit.

(c) A certifying official of any unit may petition the Administrator for a determination of applicability under this section.

(1) *Petition content.* The petition shall be in writing and include identification of the unit and relevant and appropriate facts about the unit. The petition shall meet the requirements of § 72.21. In accordance with § 72.21(d), the certifying official shall provide each owner or operator of the unit, facility, or source with a copy of the petition and a copy of the Administrator's response.

(2) *Timing.* The petition shall be submitted to the Administrator prior to the issuance (including renewal) of a Phase II Acid Rain permit for the unit as a final agency action.

(3) *Submission.* All submittals under this section shall be made by the certifying official to the Director, Acid Rain Division, (6204J), 401 M Street, SW., Washington, DC, 20460.

(4) *Response.* The Administrator will issue a written response based upon the factual submittal meeting the requirements of paragraph (c)(1) of this section.

(5) *Administrative appeals.* The Administrator's determination of applicability is a decision appealable under 40 CFR part 78 of this chapter.

(6) *Effect of determination.* The Administrator's determination of applicability shall be binding upon the permitting authority, unless the petition is found to have contained significant errors or omissions.

[58 FR 3650, Jan. 11, 1993, as amended at 58 FR 15648, Mar. 23, 1993]

§ 72.7 New units exemption.

(a) *Applicability.* This section applies to any new utility unit that serves one or more generators with total nameplate capacity of 25 MWe or less and burns only fuels with a sulfur content of 0.05 percent or less by weight, as determined in accordance with paragraph (d)(2) of this section.

(b) *Petition for written exemption.* The designated representative, authorized in accordance with subpart B of this part, of a source that includes a unit under paragraph (a) of this section may petition the permitting authority for a written exemption, or to renew a written exemption, for the unit from certain requirements of the Acid Rain Program. The petition shall include the following elements in a format prescribed by the Administrator:

(1) Identification of the unit.

(2) The nameplate capacity of each generator served by the unit.

(3) A list of all fuels currently burned by the unit and their percentage sulfur content by weight, determined in accordance with paragraph (a) of this section.

(4) A list of all fuels that are expected to be burned by the unit and their sulfur content by weight.

(5) The special provisions in paragraph (d) of this section.

(c) *Permitting authority's action.*

(1)(i) The permitting authority shall issue, for any unit meeting the requirements of paragraphs (a) and (b) of this section, a written exemption from the requirements of the Acid Rain Program except for the requirements specified in this section and §§ 72.1 through 72.6 and §§ 72.10 through 72.13; *provided* that no unit shall be exempted unless allowances, equal in number to, and with the same or earlier compliance use date as, all of those allocated under subpart B of part 73 of this chapter for any year for which the unit will be exempted,

are deducted from the unit's Allowance Tracking System account.

(ii) The exemption shall take effect on January 1 of the year immediately following the earlier of the date on which the written exemption is issued subject to administrative appeal under part 78 of this chapter or is issued as a final agency action subject to judicial review, in accordance with paragraph (c)(2) of this section; *provided* that the owners and operators, and, to the extent applicable, the designated representative, shall comply with the requirements of the Acid Rain Program concerning all years for which the unit was not exempted, even if such requirements arise, or must be complied with, after the exemption takes effect. The exemption shall not be a defense against any violation of such requirements of the Acid Rain Program whether the violation occurs before or after the exemption takes effect.

(2) In considering and issuing or denying a written exemption under paragraph (c)(1) of this section, the permitting authority shall apply the procedures in subparts F and G of this part and part 70 of this chapter, as applicable, by:

(i) Treating the petition as an Acid Rain permit application under such provisions;

(ii) Issuing or denying a draft written exemption that is treated as the issuance or denial of a draft permit under such provisions; and

(iii) Where the Administrator is the permitting authority, issuing or denying a written exemption that is treated as the issuance or denial of a permit under subpart F of this part or, where a State is the permitting authority, issuing or denying a proposed written exemption that is treated as the issuance or denial of a proposed permit under subpart G of this part and part 70 of this chapter; *provided* that no provision under subparts F and G of this part and part 70 of this chapter concerning the content, effective date, or term of an Acid Rain permit shall apply to the written exemption or proposed written exemption under this section.

(3) A written exemption issued under this section shall have a term of 5 years from its effective date, except as provided in paragraph (d)(4) of this section.

(d) *Special provisions.* (1) The owners and operators of each unit exempted under this section shall surrender allowances equal in number to, and with the same or an earlier compliance use date as, all of those allocated to the unit under subpart B of part 73 of this chapter for any year for which the unit is exempted and shall waive the right to receive any allowances to be allocated under subpart B of part 73 of this chapter for any year for which the unit is exempted.

(2) The owners and operators of each unit exempted under this section shall determine the sulfur content by weight of its fuel as follows:

(i) For petroleum or petroleum products that the unit burns starting on the first day on which the exemption takes effect until the exemption terminates, a sample of each delivery of such fuel shall be tested using ASTM methods ASTM D4057–88 and ASTM D129–91, ASTM D2622–92, or ASTM D4294–90 (all methods incorporated by reference under § 72.13 of this part.)

(ii) For natural gas that the unit burns starting on the first day on which the exemption takes effect until the exemption terminates, the sulfur content shall be assumed to be 0.05 per cent or less by weight.

(iii) For gaseous fuel (other than natural gas) that the unit burns starting on the first day on which the exemption takes effect until the exemption terminates, a sample of each delivery of such fuel shall be tested using ASTM methods ASTM D1072–90 and ASTM D1265–92 (incorporated by reference under § 72.13 of this part); *provided* that if the gaseous fuel is delivered by pipeline to the unit, a sample of the fuel shall be tested, at least once every quarter in which the unit operates during any year for which the exemption is in effect, using ASTM method ASTM D1072–90 (incorporated by reference under § 72.13 of this part).

(3) The owners and operators of each unit exempted under this section shall retain at the source that includes the unit, the records of the results of the tests performed under paragraph (d)(2)(i) and (iii) of this section and a copy of the purchase agreements for the fuel

under paragraph (d)(2) of this section, stating the sulfur content of such fuel. Such records and documents shall be retained for 5 years from the date they are created.

(4) On the earlier of the date the written exemption expires, the date a unit exempted under this section burns any fuel with a sulfur content in excess of 0.05 percent by weight (as determined in accordance with paragraph (d)(2) of this section), or 24 months prior to the date the unit first serves one or more generators with total nameplate capacity in excess of 25 MWe, the unit shall no longer be exempted under this section and shall be subject to all requirements of the Acid Rain Program, except that:

(i) Notwithstanding § 72.30 (b) and (c), the designated representative of the source that includes the unit shall submit a complete Acid Rain permit application on the later of January 1, 1998 or the date the unit is no longer exempted under this section.

(ii) For purposes of applying monitoring requirements under part 75 of this chapter, the unit shall be treated as a new unit that commenced commercial operation on the date the unit no longer meets the requirements of paragraph (a) of this section.

§ 72.8 Retired units exemption.

(a) *Applicability*. This section applies to any affected unit that is retired prior to the issuance (including renewal) of a Phase II Acid Rain permit for the unit as a final agency action.

(b) *Petition for Written Exemption*. (1) The designated representative, authorized in accordance with subpart B of this part, of a source that includes a unit under paragraph (a) of this section may petition the permitting authority for a written exemption, or to renew a written exemption, for the unit from certain requirements of this part.

(2) A petition under this section shall be submitted on or before:

(i) The deadline for submitting an Acid Rain permit application for Phase II; or

(ii) If the unit has a Phase II Acid Rain permit, the deadline for reapplying for such permit.

(3) The petition under this section shall include the following elements in a format prescribed by the Administrator:

(i) Identification of the unit.

(ii) The applicable deadline under paragraph (b)(2) of this section.

(iii) The actual or expected date of retirement of the unit.

(iv) The following statement: ''I certify that this unit ['is' or 'will be', as applicable] permanently retired on the date specified in this petition and will not emit any sulfur dioxide or nitrogen oxides after such date.''

(v) A description of any actions that have been or will be taken and provide the basis for the certification in paragraph (b)(3)(iv) of this section.

(vi) The special provisions in paragraph (d) of this section.

(c) *Permitting Authority's Action*. (1)(i) The permitting authority shall issue, for any unit meeting the requirements of paragraphs (a) and (b) of this section, a written exemption from the requirements of this part except for the requirements specified in this section and §§ 72.1 through 72.6 and §§ 72.10 through 72.13.

(ii) The exemption shall take effect on January 1 of the year following the earlier of the date on which the written exemption is issued subject to administrative appeal under part 78 of this chapter or is issued as a final agency action subject to judicial review, in accordance with paragraph (c)(2) of this section; *provided* that the owners and operators, and, to the extent applicable, the designated representative, shall comply with the requirements of this part concerning all years for which the unit was not exempted, even if such requirements arise or must be complied with after the exemption takes effect. The exemption shall not be a defense against any violation of such requirements of the Acid Rain Program whether the violation occurs before or after the exemption takes effect.

(2) In considering and issuing or denying a written exemption under paragraph (c)(1) of this section, the permitting authority shall apply the procedures in subparts F and G of this part and part 70 of this chapter, as applicable, by:

(i) Treating the petition as an Acid Rain permit application under such provisions;

(ii) Issuing or denying a draft written exemption that is treated as the issuance or denial of a draft permit under such provisions; and

(iii) Where the Administrator is the permitting authority, issuing or denying a written exemption that is treated as a permit under subpart F of this part or, where a State is the permitting authority, issuing or denying a proposed written exemption that is treated as a proposed permit under subpart G of this part and part 70 of this chapter; *provided* that no provision under subparts F and G of this part and part 70 of this chapter concerning, the content, effective date, or term of an Acid Rain permit shall apply to the written exemption or proposed written exemption under this section.

(3) A written exemption issued under this section shall have a term of 5 years, except as provided in paragraph (d)(3) of this section.

(d) *Special Provisions.* (1) A unit exempted under this section shall not emit any sulfur dioxide and nitrogen dioxide starting on the date it is exempted.

(2) The owners and operators of a unit exempted under this section shall comply with monitoring requirements in accordance with part 75 of this chapter and will be allocated allowances in accordance with part 73 of this chapter.

(3) A unit exempted under this section shall not resume operation unless the designated representative of the source that includes the unit submits an Acid Rain permit application for the unit not less than 24 months prior to the later of January 1, 2000 or the date the unit is to resume operation. On the earlier of the date the written exemption expires or the date an Acid Rain permit application is submitted or is required to be submitted under this paragraph, the unit shall no longer be exempted under this section and shall be subject to all requirements of this part.

[58 FR 3650, Jan. 11, 1993; 58 FR 40747, July 30, 1993]

§ 72.9 Standard requirements.

(a) *Permit Requirements.* (1) The designated representative of each affected source and each affected unit at the source shall:

(i) Submit a complete Acid Rain permit application (including a compliance plan) under this part in accordance with the deadlines specified in § 72.30;

(ii) Submit in a timely manner a complete reduced utilization plan if required under § 72.43; and

(iii) Submit in a timely manner any supplemental information that the permitting authority determines is necessary in order to review an Acid Rain permit application and issue or deny an Acid Rain permit.

(2) The owners and operators of each affected source and each affected unit at the source shall:

(i) Operate the unit in compliance with a complete Acid Rain permit application or a superseding Acid Rain permit issued by the permitting authority; and

(ii) Have an Acid Rain Permit.

(b) *Monitoring Requirements.* (1) The owners and operators and, to the extent applicable, designated representative of each affected source and each affected unit at the source shall comply with the monitoring requirements as provided in part 75 of this chapter and section 407 of the Act and regulations implementing section 407 of the Act.

(2) The emissions measurements recorded and reported in accordance with part 75 of this chapter and section 407 of the Act and regulations implementing section 407 of the Act shall be used to determine compliance by the unit with the Acid Rain emissions limitations and emissions reduction requirements for sulfur dioxide and nitrogen oxides under the Acid Rain Program.

(3) The requirements of part 75 of this chapter and regulations implementing section 407 of the Act shall not affect the responsibility of the owners and operators to monitor emissions of other pollutants or other emissions characteristics at the unit under other applicable requirements of the Act and other provisions of the operating permit for the source.

(c) *Sulfur Dioxide Requirements.* (1) The owners and operators of each source and each affected unit at the source shall:

(i) Hold allowances, as of the allowance transfer deadline, in the unit's

compliance subaccount (after deductions under § 73.34(c) of this chapter) not less than the total annual emissions of sulfur dioxide for the previous calendar year from the unit; and

(ii) Comply with the applicable Acid Rain emissions limitation for sulfur dioxide.

(2) Each ton of sulfur dioxide emitted in excess of the Acid Rain emissions limitations for sulfur dioxide shall constitute a separate violation of the Act.

(3) An affected unit shall be subject to the requirements under paragraph (c)(1) of this section as follows:

(i) Starting January 1, 1995, an affected unit under § 72.6(a)(1);

(ii) Starting on or after January 1, 1995 in accordance with §§ 72.41 and 72.43, an affected unit under § 72.6(a) (2) or (3) that is a substitution or compensating unit;

(iii) Starting January 1, 2000, an affected unit under § 72.6(a)(2) that is not a substitution or compensating unit; or

(iv) Starting on the later of January 1, 2000 or the deadline for monitor certification under part 75 of this chapter, an affected unit under § 72.6(a)(3) that is not a substitution or compensating unit.

(4) Allowances shall be held in, deducted from, or transferred among Allowance Tracking System accounts in accordance with the Acid Rain Program.

(5) An allowance shall not be deducted, in order to comply with the requirements under paragraph (c)(1)(i) of this section, prior to the calendar year for which the allowance was allocated.

(6) An allowance allocated by the Administrator under the Acid Rain Program is a limited authorization to emit sulfur dioxide in accordance with the Acid Rain Program. No provision of the Acid Rain Program, the Acid Rain permit application, the Acid Rain permit, or the written exemption under §§ 72.7 and 72.8 and no provision of law shall be construed to limit the authority of the United States to terminate or limit such authorization.

(7) An allowance allocated by the Administrator under the Acid Rain Program does not constitute a property right.

(d) *Nitrogen Oxides Requirements.* The owners and operators of the source and each affected unit at the source shall comply with the applicable Acid Rain emissions limitation for nitrogen oxides.

(e) *Excess Emissions Requirements.* (1) The designated representative of an affected unit that has excess emissions in any calendar year shall submit a proposed offset plan, as required under part 77 of this chapter.

(2) The owners and operators of an affected unit that has excess emissions in any calendar year shall:

(i) Pay without demand the penalty required, and pay upon demand the interest on that penalty, as required by part 77 of this chapter; and

(ii) Comply with the terms of an approved offset plan, as required by part 77 of this chapter.

(f) *Recordkeeping and Reporting Requirements.* (1) Unless otherwise provided, the owners and operators of the source and each affected unit at the source shall keep on site at the source each of the following documents for a period of 5 years from the date the document is created. This period may be extended for cause, at any time prior to the end of 5 years, in writing by the Administrator or permitting authority.

(i) The certificate of representation for the designated representative for the source and each affected unit at the source and all documents that demonstrate the truth of the statements in the certificate of representation, in accordance with § 72.24; *provided* that the certificate and documents shall be retained on site at the source beyond such 5-year period until such documents are superseded because of the submission of a new certificate of representation changing the designated representative.

(ii) All emissions monitoring information, in accordance with part 75 of this chapter.

(iii) Copies of all reports, compliance certifications, and other submissions and all records made or required under the Acid Rain Program.

(iv) Copies of all documents used to complete an Acid Rain permit application and any other submission under the Acid Rain Program or to demonstrate compliance with the requirements of the Acid Rain Program.

(2) The designated representative of an affected source and each affected unit at the source shall submit the reports and compliance certifications required under the Acid Rain Program, including those under subpart I of this part and part 75 of this chapter.

(g) *Liability*. (1) Any person who knowingly violates any requirement or prohibition of the Acid Rain Program, a complete Acid Rain permit application, an Acid Rain permit, or a written exemption under § 72.7 or § 72.8, including any requirement for the payment of any penalty owed to the United States, shall be subject to enforcement pursuant to section 113(c) of the Act.

(2) Any person who knowingly makes a false, material statement in any record, submission, or report under the Acid Rain Program shall be subject to criminal enforcement pursuant to section 113(c) of the Act and 18 U.S.C. 1001.

(3) No permit revision shall excuse any violation of the requirements of the Acid Rain Program that occurs prior to the date that the revision takes effect.

(4) Each affected source and each affected unit shall meet the requirements of the Acid Rain Program.

(5) Any provision of the Acid Rain Program that applies to an affected source (including a provision applicable to the designated representative of an affected source) shall also apply to the owners and operators of such source and of the affected units at the source.

(6) Any provision of the Acid Rain Program that applies to an affected unit (including a provision applicable to the designated representative of an affected unit) shall also apply to the owners and operators of such unit. Except as provided under § 72.41 (substitution plans), § 72.42 (Phase I extension plans), § 72.43 (reduced utilization plans), § 72.44 (Phase II repowering extension plans), § 74.47 of this chapter (thermal energy plans), and part 76 of this chapter (NO_X averaging plans), and except with regard to the requirements applicable to units with a common stack under part 75 of this chapter (including §§ 75.16, 75.17 and 75.18 of this chapter), the owners and operators and the designated representative of one affected unit shall not be liable for any violation by any other affected unit of which they are not owners or operators or the designated representative and that is located at a source of which they are not owners or operators or the designated representative.

(7) Each violation of a provision of this part, parts 73, 74, 75, 76, 77, and 78 of this chapter, by an affected source or affected unit, or by an owner or operator or designated representative of such source or unit, shall be a separate violation of the Act.

(h) *Effect on Other Authorities.* No provision of the Acid Rain Program, an Acid Rain permit application, an Acid Rain permit, or a written exemption under §§ 72.7 or 72.8 shall be construed as:

(1) Except as expressly provided in title IV of the Act, exempting or excluding the owners and operators and, to the extent applicable, the designated representative of an affected source or affected unit from compliance with any other provision of the Act, including the provisions of title I of the Act relating to applicable National Ambient Air Quality Standards or State Implementation Plans.

(2) Limiting the number of allowances a unit can hold; *provided*, that the number of allowances held by the unit shall not affect the source's obligation to comply with any other provisions of the Act.

(3) Requiring a change of any kind in any State law regulating electric utility rates and charges, affecting any State law regarding such State regulation, or limiting such State regulation, including any prudence review requirements under such State law.

(4) Modifying the Federal Power Act or affecting the authority of the Federal Energy Regulatory Commission under the Federal Power Act.

(5) Interfering with or impairing any program for competitive bidding for power supply in a State in which such program is established.

[58 FR 3650, Jan. 11, 1993, as amended at 60 FR 17113, Apr. 4, 1995]

§ 72.10 Availability of information.

The availability to the public of information provided to, or otherwise obtained by, the Administrator under the

Acid Rain Program shall be governed by part 2 of this chapter.

§72.11 Computation of time.

(a) Unless otherwise stated, any time period scheduled, under the Acid Rain Program, to begin on the occurrence of an act or event shall begin on the day the act or event occurs.

(b) Unless otherwise stated, any time period scheduled, under the Acid Rain Program, to begin before the occurrence of an act or event shall be computed so that the period ends on the day before the act or event occurs.

(c) Unless otherwise stated, if the final day of any time period, under the Acid Rain Program, falls on a weekend or a federal holiday, the time period shall be extended to the next business day.

(d) Whenever a party or interested person has the right, or is required, to act under the Acid Rain Program within a prescribed time period after service of notice or other document upon him or her by mail, 3 days shall be added to the prescribed time.

§72.12 Administrative appeals.

The procedures for appeals of decisions of the Administrator under this part are contained in part 78 of this chapter.

§72.13 Incorporation by reference.

The materials listed in this section are incorporated by reference in the corresponding sections noted. These incorporations by reference were approved by the Director of the Federal Register in accordance with 5 U.S.C. 552(a) and 1 CFR part 51. These materials are incorporated as they existed on the date of approval, and a notice of any change in these materials will be published in the FEDERAL REGISTER. The materials are available for purchase at the corresponding address noted below and are available for inspection at the Office of the Federal Register, 800 North Capitol Street, NW., Suite 700, Washington, DC, at the Public Information Reference Unit of the U.S. EPA, 401 M Street SW, Washington, DC and at the Library (MD–35), U.S. EPA, Research Triangle Park, North Carolina.

(a) The following materials are available for purchase from the following addresses: American Society for Testing and Material (ASTM), 1916 Race Street, Philadelphia, Pennsylvania 19103; and the University Microfilms International 300 North Zeeb Road, Ann Arbor, Michigan 48106.

(1) ASTM D129–91, Standard Test Method for Sulfur in Petroleum Products (General Bomb Method), for §72.7 of this chapter.

(2) ASTM D388–92, Standard Classification of Coals by Rank for §72.2 of this chapter.

(3) ASTM D396–90a, Standard Specification for Fuel Oils, for §72.2 of this chapter.

(4) ASTM D975–91, Standard Specification for Diesel Fuel Oils, for §72.2 of this chapter.

(5) ASTMD1072–90, Standard Test Method for Total Sulfur in Fuel Gases, for §72.7 of this chapter.

(6) ASTMD1265–92, Standard Practice for Sampling Liquified Petroleum (LP) Gases (Manual Method), for §72.7 of this chapter.

(7) ASTM D2622–92, Standard Test Method for Sulfur in Petroleum Products by X-Ray Spectrometry, for §72.7 of this chapter.

(8) ASTM D2880–90a, Standard Specification for Gas Turbine Fuel Oils, for §72.2 of this part.

(9) ASTM D4057–88, Standard Practice for Manual Sampling of Petroleum and Petroleum Products, for §72.7 of this part.

(10) ASTM D4294–90, Standard Test Method for Sulfur in Petroleum Products by Energy-Dispersive X-Ray Fluorescence Spectroscopy, for §72.7 of this part.

(b) [Reserved]

[58 FR 3650, Jan. 11, 1993, as amended at 60 FR 26526, May 17, 1995]

Subpart B—Designated Representative

§72.20 Authorization and responsibilities of the designated representative.

(a) Except as provided under §72.22, each affected source, including all affected units at the source, shall have one and only one designated representative, with regard to all matters under

the Acid Rain Program concerning the source or any affected unit at the source.

(b) Upon receipt by the Administrator of a complete certificate of representation, the designated representative of the source shall represent and, by his or her actions, inactions, or submissions, legally bind each owner and operator of the affected source represented and each affected unit at the source in all matters pertaining to the Acid Rain Program, not withstanding any agreement between the designated representative and such owners and operators. The owners and operators shall be bound by any order issued to the designated representative by the Administrator, the permitting authority, or a court.

(c) The designated representative shall be selected and act in accordance with the certifications set forth in § 72.24(a) (4), (5), (7), and (9).

(d) No Acid Rain permit shall be issued to an affected source, nor shall any allowance transfer be recorded for an Allowance Tracking System account of an affected unit at a source, until the Administrator has received a complete certificate of representation for the designated representative of the source and the affected units at the source.

§ 72.21 Submissions.

(a) Each submission under the Acid Rain Program shall be submitted, signed, and certified by the designated representative for all sources on behalf of which the submission is made.

(b) In each submission under the Acid Rain Program, the designated representative shall certify, by his or her signature:

(1) The following statement, which shall be included verbatim in such submission: ''I am authorized to make this submission on behalf of the owners and operators of the affected source or affected units for which the submission is made.''

(2) The following statement, which shall be included verbatim in such submission: ''I certify under penalty of law that I have personally examined, and am familiar with, the statements and information submitted in this document and all its attachments. Based on my inquiry of those individuals with primary responsibility for obtaining the information, I certify that the statements and information are to the best of my knowledge and belief true, accurate, and complete. I am aware that there are significant penalties for submitting false statements and information or omitting required statements and information, including the possibility of fine or imprisonment.''

(c) The Administrator and the permitting authority shall accept or act on a submission made on behalf of owners or operators of an affected source and an affected unit only if the submission has been made, signed, and certified in accordance with paragraphs (a) and (b) of this section.

(d)(1) The designated representative of a source shall serve notice on each owner and operator of the source and of an affected unit at the source:

(i) By the date of submission, of any Acid Rain Program submissions by the designated representative and

(ii) Within 10 business days of receipt of a determination, of any written determination by the Administrator or the permitting authority,

(iii) Provided that the submission or determination covers the source or the unit.

(2) The designated representative of a source shall provide each owner and operator of an affected unit at the source a copy of any submission or determination under paragraph (d)(1) of this section, unless the owner or operator expressly waives the right to receive such a copy.

(e) The provisions of this section shall apply to a submission made under parts 73, 74, 75, 76, 77, and 78 of this chapter only if it is made or signed or required to be made or signed, in accordance with parts 73, 74, 75, 76, 77, and 78 of this chapter, by:

(1) The designated representative; or

(2) The authorized account representative or alternate authorized account representative of a unit account.

[58 FR 3650, Jan. 11, 1993, as amended at 60 FR 17113, Apr. 4, 1995]

§72.22 Alternate designated representative.

(a) The certificate of representation may designate one and only one alternate designated representative, who may act on behalf of the designated representative. The agreement by which the alternate designated representative is selected shall include a procedure for the owners and operators of the source and affected units at the source to authorize the alternate designated representative to act in lieu of the designated representative.

(b) Upon receipt by the Administrator of a complete certificate of representation that meets the requirements of §72.24 (including those applicable to the alternate designated representative), any action, representation, or failure to act by the alternate designated representative shall be deemed to be an action, representation, or failure to act by the designated representative.

(c) In the event of a conflict, any action taken by the designated representative shall take precedence over any action taken by the alternate designated representative if, in the Administrator's judgement, the actions are concurrent and conflicting.

(d) Except in this section, §72.23, and §72.24, whenever the term ''designated representative'' is used under the Acid Rain Program, the term shall be construed to include the alternate designated representative.

§72.23 Changing the designated representative, alternate designated representative; changes in the owners and operators.

(a) *Changing the designated representative.* The designated representative may be changed at any time upon receipt by the Administrator of a superseding complete certificate of representation. Notwithstanding any such change, all submissions, actions, and inactions by the previous designated representative prior to the time and date when the Administrator receives the superseding certificate of representation shall be binding on the new designated representative and on the owners and operators of the source represented and the affected units at the source.

(b) *Changing the alternate designated representative.* The alternate designated representative may be changed at any time upon receipt by the Administrator of a superseding complete certificate of representation. Notwithstanding any such change, all submissions, actions, and inactions by the previous alternate designated representative prior to the time and date when the Administrator receives the superseding certificate of representation shall be binding on the new alternate designated representative and on the owners and operators of the source represented and the affected units at the source.

(c) *Changes in the owners and operators.* (1) In the event a new owner or operator of an affected source or an affected unit is not included in the list of owners and operators submitted in the certificate of representation, such new owner or operator shall be deemed to be subject to and bound by the certificate of representation, the submissions, actions, and inactions of the designated representative and any alternative designated representative of the source or unit, and the decisions, actions, and inactions of the Administrator and permitting authority, as if the new owner or operator were included in such list.

(2) Within 30 days following any change in the owners and operators of an affected unit, including the addition of a new owner or operator, the designated representative or any alternative designated representative shall submit a revision to the certificate of representation amending the list of owners and operators to include the change.

§72.24 Certificate of representation.

(a) A complete certificate of representation for a designated representative or an alternate designated representative shall include the following elements in a format prescribed by the Administrator:

(1) Identification of the affected source and each affected unit at the source for which the certificate of representation is submitted.

(2) The name, address, and telephone and facsimile numbers of the designated representative and any alternate designated representative.

(3) A list of the owners and operators of the affected source and of each affected unit at the source and all State or local utility regulatory authorities with jurisdiction over each owner.

(4) The following statement: ''I certify that I was selected as the 'designated representative' or 'alternate designated representative,' as applicable, by an agreement binding on the owners and operators of the affected source and each affected unit at the source.''

(5) The following statement: ''I certify that I have given notice of the agreement, selecting me as the 'designated representative' or 'alternate designated representative,' as applicable for the affected source and each affected unit at the source identified in this certificate of representation, daily for a period of one week in a newspaper of general circulation in the area where the source is located or in a State publication designed to give general public notice.''

(6) The following statement: ''I certify that I have all necessary authority to carry out my duties and responsibilities under the Acid Rain Program on behalf of the owners and operators of the affected source and of each affected unit at the source and that each such owner and operator shall be fully bound by my actions, inactions, or submissions.''

(7) The following statement: ''I certify that I shall abide by any fiduciary responsibilities imposed by the agreement by which I was selected as 'designated representative' or 'alternate designated representative', as applicable.''

(8) The following statement: ''I certify that the owners and operators of the affected source and of each affected unit at the source shall be bound by any order issued to me by the Administrator, the permitting authority, or a court regarding the source or unit.''

(9) The following statement: ''Where there are multiple holders of a legal or equitable title to, or a leasehold interest in, an affected unit, or where a utility or industrial customer purchases power from an affected unit under life-of-the-unit, firm power contractual arrangements, I certify that:

(i) ''I have given a written notice of my selection as the 'designated representative' or 'alternate designated representative', as applicable, and of the agreement by which I was selected to each owner and operator of the affected source and of each affected unit at the source; and

(ii) ''Allowances and proceeds of transactions involving allowances will be deemed to be held or distributed in proportion to each holder's legal, equitable, leasehold, or contractual reservation or entitlement or, if such multiple holders have expressly provided for a different distribution of allowances by contract, that allowances and the proceeds of transactions involving allowances will be deemed to be held or distributed in accordance with the contract.''

(10) If there is an alternate designated representative, the following statement: ''The agreement by which I was selected as the alternate designated representative includes a procedure for the owners and operators of the source and affected units at the source to authorize the alternate designated representative to act in lieu of the designated representative.''

(11) The signature of the designated representative and any alternate designated representative and the date signed.

(b) Unless otherwise required by the Administrator or the permitting authority, documents of agreement or notice referred to in the certificate of representation shall not be submitted to the Administrator or the permitting authority. Neither the Administrator nor the permitting authority shall be under any obligation to review or evaluate the sufficiency of such documents, if submitted.

§ 72.25 Objections.

(a) Once a complete certificate of representation has been submitted in accordance with § 72.24, the Administrator will rely on the certificate of representation unless and until a superseding complete certificate is submitted to the Administrator.

(b) Except as provided in §72.23, no objection or other communication submitted to the Administrator or the permitting authority concerning the authorization, or any submission, action or inaction, of the designated representative shall affect any submission, action, or inaction of the designated representative, or the finality of any decision by the Administrator or permitting authority, under the Acid Rain Program. In the event of such communication, the Administrator and the permitting authority are not required to stay any allowance transfer, any submission, or the effect of any action or inaction under the Acid Rain Program.

(c) Neither the Administrator nor any permitting authority will adjudicate any private legal dispute concerning the authorization or any submission, action, or inaction of any designated representative, including private legal disputes concerning the proceeds of allowance transfers.

Subpart C—Acid Rain Permit Applications

§72.30 Requirement to apply.

(a) *Duty to apply.* The designated representative of any source with an affected unit shall submit a complete Acid Rain permit application by the applicable deadline in paragraphs (b) and (c) of this section, and the owners and operators of such source and any affected unit at the source shall not operate the source or unit without a permit that states its Acid Rain program requirements.

(b) *Deadlines.* (1) *Phase 1.* (i) The designated representative shall submit a complete Acid Rain permit application governing an affected unit during Phase I to the Administrator on or before February 15, 1993 for:

(A) Any source with such a unit under §72.6(a)(1); and

(B) Any source with such a unit under §72.6(a) (2) or (3) that is designated a substitution or compensating unit in a substitution plan or reduced utilization plan submitted to the Administrator for approval or conditional approval.

(ii) Notwithstanding paragraph (b)(1)(i) of this section, if a unit at a source not previously permitted is designated a substitution or compensating unit in a submission requesting revision of an existing Acid Rain permit, the designated representative of the unit shall submit a complete Acid Rain permit application on the date that the submission requesting the revision is made.

(2) *Phase II.* (i) For any source with an existing unit under §72.6(a)(2), the designated representative shall submit a complete Acid Rain permit application governing such unit during Phase II to the permitting authority on or before January 1, 1996.

(ii) For any source with a new unit under §72.6(a)(3)(i), the designated representative shall submit a complete Acid Rain permit application governing such unit to the permitting authority at least 24 months before the later of January 1, 2000 or the date on which the unit commences operation.

(iii) For any source with a unit under §72.6(a)(3)(ii), the designated representative shall submit a complete Acid Rain permit application governing such unit to the permitting authority at least 24 months before the later of January 1, 2000 or the date on which the unit begins to serve a generator with a nameplate capacity greater than 25 MWe.

(iv) For any source with a unit under §72.6(a)(3)(iii), the designated representative shall submit a complete Acid Rain permit application governing such unit to the permitting authority at least 24 months before the later of January 1, 2000 or the date on which the auxiliary firing commences operation.

(v) For any source with a unit under §72.6(a)(3)(iv), the designated representative shall submit a complete Acid Rain permit application governing such unit to the permitting authority before the later of January 1, 1998 or March 1 of the year following the three calendar year period in which the unit sold to a utility power distribution system an annual average of more than one-third of its potential electrical output capacity and more than 219,000 MWe-hrs actual electric output (on a gross basis).

(vi) For any source with a unit under § 72.6(a)(3)(v), the designated representative shall submit a complete Acid Rain permit application governing such unit to the permitting authority before the later of January 1, 1998 or March 1 of the year following the calendar year in which the facility fails to meet the definition of qualifying facility.

(vii) For any source with a unit under § 72.6(a)(3)(vi), the designated representative shall submit a complete Acid Rain permit application governing such unit to the permitting authority before the later of January 1, 1998 or March 1 of the year following the calendar year in which the facility fails to meet the definition of an independent power production facility.

(viii) For any source with a unit under § 72.6(a)(3)(vii), the designated representative shall submit a complete Acid Rain permit application governing such unit to the permitting authority before the later of January 1, 1998 or March 1 of the year following the three calendar year period in which the incinerator consumed 20 percent or more fossil fuel (on a Btu basis).

(3) *Acid Rain Compliance Option Deadlines.* The deadlines for applying for approval of any Acid Rain compliance options shall be the deadlines specified in the relevant section of subpart D of this part and in section 407 of the Act and regulations implementing section 407 of the Act.

(c) *Duty to reapply.* The designated representative shall submit a complete Acid Rain permit application for each source with an affected unit at least 6 months prior to the expiration of an existing Acid Rain permit governing the unit during Phase II or an opt-in permit governing an opt-in source or such longer time as may be approved under part 70 of this chapter that ensures that the term of the existing permit will not expire before the effective date of the permit for which the application is submitted.

(d) The original and three copies of all permit applications for Phase I and where the Administrator is the permitting authority, for Phase II, shall be submitted to the EPA Regional Office for the Region where the affected source is located. The original and three copies of all permit applications for Phase II, where the Administrator is not the permitting authority, shall be submitted to the State permitting authority for the State where the affected source is located.

[58 FR 3650, Jan. 11, 1993, as amended at 58 FR 15649, Mar. 23, 1993; 60 FR 17113, Apr. 4, 1995]

§ 72.31 Information requirements for Acid Rain permit applications.

A complete Acid Rain permit application shall include the following elements in a format prescribed by the Administrator:

(a) Identification of the affected source for which the permit application is submitted;

(b) Identification of each Phase I unit at the source for which the permit application is submitted for Phase I or each Phase II unit at the source for which the permit application is submitted for Phase II;

(c) A complete compliance plan for each unit, in accordance with subpart D of this part;

(d) The standard requirements under § 72.9; and

(e) If the Acid Rain permit application is for Phase II and the unit is a new unit, the date that the unit has commenced or will commence operation and the deadline for monitor certification.

§ 72.32 Permit application shield and binding effect of permit application.

(a) Once a designated representative submits a timely and complete Acid Rain permit application, the owners and operators of the affected source and the affected units covered by the permit application shall be deemed in compliance with the requirement to have an Acid Rain permit under § 72.9(a)(2) and § 72.30(a); *provided* that any delay in issuing an Acid Rain permit is not caused by the failure of the designated representative to submit in a complete and timely fashion supplemental information, as required by the permitting authority, necessary to issue a permit.

(b) Prior to the earlier of the date on which an Acid Rain permit is issued subject to administrative appeal under part 78 of this chapter or is issued as a

final agency action subject to judicial review, an affected unit governed by and operated in accordance with the terms and requirements of a timely and complete Acid Rain permit application shall be deemed to be operating in compliance with the Acid Rain Program.

(c) A complete Acid Rain permit application shall be binding on the owners and operators and the designated representative of the affected source and the affected units covered by the permit application and shall be enforceable as an Acid Rain permit from the date of submission of the permit application until the issuance or denial of an Acid Rain permit covering the units and subject to administrative appeal, where the Administrator is the permitting authority, or the issuance or denial of such permit as a final agency action subject to judicial review, where the State is the permitting authority.

§72.33 Identification of dispatch system.

(a) Every Phase I unit shall be treated as part of a dispatch system for purposes of §§72.91 and 72.92 in accordance with this section.

(b)(1) The designated representatives of all affected units in a group of all units and generators that are interconnected and centrally dispatched and that are included in the same utility system, holding company, or power pool, may jointly submit to the Administrator a complete identification of dispatch system.

(2) Except as provided in paragraph (f) of this section, each unit or generator may be included in only one dispatch system.

(3) Any identification of dispatch system must be submitted by January 30 of the first year for which the identification is to be in effect.

(c) A complete identification of dispatch system shall include the following elements in a format prescribed by the Administrator:

(1) The name of the dispatch system.

(2) The list of all units and generators (including sulfur-free generators) in the dispatch system.

(3) The first calendar year for which the identification is to be in effect.

(4) The following statement: ''I certify that, except as otherwise required under a petition as approved under 40 CFR 72.33(f), the units and generators listed herein are and will continue to be interconnected and centrally dispatched, and will be treated as a dispatch system under 40 CFR 72.91 and 72.92, during the period that this identification of dispatch system is in effect. During such period, all information concerning these units and generators and contained in any submissions under 40 CFR 72.91 and 72.92 by me and the other designated representatives of these units shall be consistent and shall conform with the data in the dispatch system data reports under 40 CFR 72.92(b). I am aware of, and will comply with, the requirements imposed under 40 CFR 72.33(e)(2).''

(5) The signatures of the designated representative for each affected unit in the dispatch system.

(d) In order to change a unit's current dispatch system, complete identifications of dispatch system shall be submitted for the unit's current dispatch system and the unit's new dispatch system, reflecting the change.

(e)(1) Any unit or generator not listed in a complete identification of dispatch system that is in effect shall treat its utility system as its dispatch system and, if such unit or generator is listed in the NADB, shall treat the utility system reported under the data field ''UTILNAME'' of the NADB as its utility system.

(2) During the period that the identification of dispatch system is in effect all information that concerns the units and generators in a given dispatch system and that is contained in any submissions under §§72.91 and 72.92 by designated representative of these units shall be consistent and shall conform with the data in the dispatch system data reports under §72.92(b). If this requirement is not met, the Administrator may reject all such submissions and require the designated representatives to make the submissions under §§72.91 and 72.92 (including the dispatch system data report) treating the utility system of each unit or generator as its respective dispatch system and treating the identification of dispatch system as no longer in effect.

(f)(1) Notwithstanding paragraph (e)(1) of this section or any submission of an identification of dispatch system under paragraphs (b) or (d) of this section, the designated representative of a Phase I unit with two or more owners may petition the Administrator to treat, as the dispatch system for an owner's portion of the unit, the dispatch system of another unit.

(i) The owner's portion of the unit shall be based on one of the following apportionment methods:

(A) *Owner's share of the unit's capacity in 1985–1987.* Under this method, the baseline of the owner's portion of the unit shall equal the baseline of the unit multiplied by the average of the owner's percentage ownership of the capacity of the unit for each year during 1985–1987. The actual utilization of the owner's portion of the unit for a year in Phase I shall equal the actual utilization of the unit for the year that is attributed to the owner.

(B) *Owner's share of the unit's baseline.* Under this method, the baseline of the owner's portion of the unit shall equal the average of the unit's annual utilization in 1985–1987 that is attributed to the owner. The actual utilization of the owner's portion of the unit for a year in Phase I shall equal the actual utilization of the unit for the year that is attributed to the owner.

(ii) The annual or actual utilization of a unit shall be attributed, under paragraph (f)(1)(i) of this section, to an owner of the unit using accounting procedures consistent with those used to determine the owner's share of the fuel costs in the operation of the unit during the period for which the annual or actual utilization is being attributed.

(iii) Upon submission of the petition, the designated representative may not change the election of the apportionment method or the baseline of the owner's portion of the unit.

The same apportionment method must be used for all portions of the unit for all years in Phase I for which any petition under paragraph (f)(1) of this section is approved and in effect.

(2) The petition under paragraph (f)(1) of this section shall be submitted by January 30 of the first year for which the dispatch system proposed in the petition will take effect, if approved. A complete petition shall include the following elements in a format prescribed by the Administrator:

(i) The election of the apportionment method under paragraph (f)(1)(i) of this section.

(ii) The baseline of the owner's portion of the unit and the baseline of any other owner's portion of the unit for which a petition under paragraph (f)(1) of this section has been approved or has been submitted (and not disapproved) and a demonstration that the sum of such baselines and the baseline of any remaining portion of the unit equals 100 percent of the baseline of the unit. The designated representative shall also submit, upon request, either:

(A) Where the unit is to be apportioned under paragraph (f)(1)(i)(A) of this section, documentation of the average of the owner's percentage ownership of the capacity of the unit for each year during 1985–1987; or

(B) Where the unit is to be apportioned under paragraph (f)(1)(i)(B) of this section, documentation showing the attribution of the unit's utilization in 1985, 1986, and 1987 among the portions of the unit and the calculation of the annual average utilization for 1985–1987 for the portions of the unit.

(iii) The name of the proposed dispatch system and a list of all units (including portions of units) and generators in that proposed dispatch system and, upon request, documentation demonstrating that the owner's portion of the unit, along with the other units in the proposed dispatch system, are a group of all units and generators that are interconnected and centrally dispatched by a single utility company, the service company of a single holding company, or a single power pool.

(iv) The following statement, signed by the designated representatives of all units in the proposed dispatch system: ''I certify that the units and generators in the dispatch system proposed in this petition are and will continue to be interconnected and centrally dispatched, and will be treated as a dispatch system under 40 CFR 72.91 and 72.92, during the period that this petition, as approved, is in effect.''

(v) The following statement, signed by the designated representatives of all

units in all dispatch systems that will include any portion of the unit if the petition is approved: ''During the period that this petition, if approved, is in effect, all information that concerns the units and generators in any dispatch system including any portion of the unit apportioned under the petition and that is contained in any submissions under 40 CFR 72.91 and 72.92 by me and the other designated representatives of these units shall be consistent and shall conform to the data in the dispatch system data reports under 40 CFR 72.92(b). I am aware of, and will comply with, the requirements imposed under 40 CFR 72.33(f) (4) and (5).''

(3)(i) The Administrator will approve in whole, in part, or with changes or conditions, or deny the petition under paragraph (f)(1) of this section within 90 days of receipt of the petition. The Administrator will treat the petition, as changed or conditioned upon approval, as amending any identification of dispatch system that is submitted prior to the approval and includes any portion of the unit for which the petition is approved. Where any portion of a unit is not covered by an approved petition, that remaining portion of the unit shall continue to be part of the unit's dispatch system.

(ii) In approving the petition, the Administrator will determine, on a case-by-case basis, the proper calculation and treatment, for purposes of the reports required under §§ 72.91 and 72.92, of plan reductions and compensating generation provided to other units.

(4) The designated representative for the unit for which a petition is approved under paragraph (f)(3) of this section and the designated representatives of all other units included in all dispatch systems that include any portion of the unit shall submit all annual compliance certification reports, dispatch system data reports, and other reports required under §§ 72.91 and 72.92 treating, as a separate Phase I unit, each portion of the unit for which a petition is approved under paragraph (f)(3) of this section and the remaining portion of the unit. The reports shall include all required calculations and demonstrations, treating each such portion of the unit as a separate Phase I unit. Upon request, the designated representatives shall demonstrate that the data in all the reports under §§ 72.91 and 72.92 has been properly attributed or apportioned among the portions of the unit and the dispatch systems and that there is no undercounting or double-counting with regard to such data.

(i) The baseline of each portion of the unit for which a petition is approved shall be determined under paragraphs (f)(1) (i) and (ii) of this section. The baseline of the remaining portion of such unit shall equal the baseline of the unit less the sum of the baselines of any portions of the unit for which a petition is approved.

(ii) The actual utilization of each portion of the unit for which a petition is approved shall be determined under paragraphs (f)(l) (i) and (ii) of this section. The actual utilization of the remaining portion of such unit shall equal the actual utilization of the unit less the sum of the actual utilizations of any portions of the unit for which a petition is approved. Upon request, the designated representative of the unit shall demonstrate in the annual compliance certification report that the requirements concerning calculation of actual utilization under paragraph (f)(1)(ii) and any requirements established under paragraph (f)(3) of this section are met.

(iii) Except as provided in paragraph (f)(5) of this section, the designated representative shall surrender for deduction the number of allowances calculated using the formula in § 72.92(c) and treating, as a separate Phase I unit, each portion of unit for which a petition is approved under paragraph (f)(3) of this section and the remaining portion of the unit.

(5) In the event that the designated representatives fail to make all the proper attributions, apportionments, calculations, and demonstrations under paragraph (f)(4) of this section and §§ 72.91 and 72.92, the Administrator may require that:

(i) All portions of the unit be treated as part of the dispatch system of the unit in accordance with paragraph (e)(1) of this paragraph and any identification of dispatch system submitted under paragraph (b) or (d) of this section;

(ii) The designated representatives make all submissions under §§ 72.91 and 72.92 (including the dispatch system data report), treating the entire unit as a single Phase I unit, in accordance with paragraph (e)(1) of this paragraph and any identification of dispatch system submitted under paragraph (b) or (d) of this section; and

(iii) The designated representative surrender for deduction the number of allowances calculated, consistent with the reports under paragraph (f)(5)(ii) of this section and §§ 72.91 and 72.92, using the formula in § 72.92(c) and treating the entire unit as a single Phase I unit.

(6) The designated representative may submit a notification to terminate an approved petition by January 30 of the first year for which the termination is to take effect. The notification must be signed and certified by the designated representatives of all units included in all dispatch systems that include any portion of the unit apportioned under the petition. Upon receipt of the notification meeting the requirements of the prior two sentences by the Administrator, the approved petition is no longer in effect for that year and the remaining years in Phase I and the designated representatives shall make all submissions under §§ 72.91 and 72.92 treating the petition as no longer in effect for all such years.

(7) Except as expressly provided in paragraphs (f)(1) through (6) of this section or the Administrator's approval of the petition, all provisions of the Acid Rain Program applicable to an affected source or an affected unit shall apply to the entire unit regardless of whether a petition has been submitted or approved, or reports have been submitted, under such paragraphs. Approval of a petition under such paragraphs shall not constitute a determination of the percentage ownership in a unit under any other provision of the Acid Rain Program and shall not change the liability of the owners and operators of an affected unit that has excess emissions under § 72.9(e).

[58 FR 3650, Jan. 11, 1993, as amended at 60 FR 18468, Apr. 11, 1995]

Subpart D—Acid Rain Compliance Plan and Compliance Options

§ 72.40 General.

(a) For each affected unit included in an Acid Rain permit application, a complete compliance plan shall:

(1) For sulfur dioxide emissions, certify that, as of the allowance transfer deadline, the designated representative will hold allowances in the unit's compliance subaccount (after deductions under § 73.34(c) of this chapter) not less than the total annual emissions of sulfur dioxide from the unit. The compliance plan may also specify, in accordance with this subpart, one or more of the Acid Rain compliance options.

(2) For nitrogen oxides emissions, certify that the unit will comply with the applicable limitation established by regulations implementing section 407 of the Act or shall specify one or more Acid Rain compliance options, in accordance with section 407 of the Act and regulations implementing section 407.

(b) *Multi-unit compliance options.* (1) A plan for a compliance option, under § 72.41, 72.42, 72.43, or 72.44 of this part, under § 74.47 of this chapter, or an NO_X averaging plan contained in part 76 of this chapter, that includes units at more than one affected source shall be complete only if:

(i) Such plan is signed and certified by the designated representative for each source with an affected unit governed by such plan; and

(ii) A complete permit application is submitted covering each unit governed by such plan.

(2) A permitting authority's approval of a plan under paragraph (b)(1) of this section that includes units in more than one State shall be final only after every permitting authority with jurisdiction over any such unit has approved the plan with the same modifications or conditions, if any.

(c) *Conditional Approval.* In the compliance plan, the designated representative of an affected unit may propose, in accordance with this subpart, any Acid Rain compliance option for conditional approval, except a Phase I extension plan; *provided* that an Acid Rain compliance option under section 407 of

the Act may be conditionally proposed only to the extent provided in regulations implementing section 407 of the Act.

(1) To activate a conditionally-approved Acid Rain compliance option, the designated representative shall notify the permitting authority in writing that the conditionally-approved compliance option will actually be pursued beginning January 1 of a specified year. If the conditionally approved compliance option includes a plan described in paragraph (b)(1) of this section, the designated representative of each source governed by the plan shall sign and certify the notification. Such notification shall be subject to the limitations on activation under subpart D of this part and regulations implementing section 407 of the Act.

(2) The notification under paragraph (c)(1) of this section shall specify the first calendar year and the last calendar year for which the conditionally approved Acid Rain compliance option is to be activated. A conditionally approved compliance option shall be activated, if at all, before the date of any enforceable milestone applicable to the compliance option. The date of activation of the compliance option shall not be a defense against failure to meet the requirements applicable to that compliance option during each calendar year for which the compliance option is activated.

(3) Upon submission of a notification meeting the requirements of paragraphs (c) (1) and (2) of this section, the conditionally-approved Acid Rain compliance option becomes binding on the owners and operators and the designated representative of any unit governed by the conditionally-approved compliance option.

(4) A notification meeting the requirements of paragraphs (c) (1) and (2) of this section will revise the unit's permit in accordance with §72.83 (administrative permit amendment).

(d) *Termination of compliance option.* (1) The designated representative for a unit may terminate an Acid Rain compliance option by notifying the permitting authority in writing that an approved compliance option will be terminated beginning January 1 of a specified year. If the compliance option includes a plan described in paragraph (b)(1) of this section, the designated representative for each source governed by the plan shall sign and certify the notification. Such notification shall be subject to the limitations on termination under subpart D of this part and regulations implementing section 407 of the Act.

(2) The notification under paragraph (d)(1) of this section shall specify the calendar year for which the termination will take effect.

(3) Upon submission of a notification meeting the requirements of paragraphs (d) (1) and (2) of this section, the termination becomes binding on the owners and operators and the designated representative of any unit governed by the Acid Rain compliance option to be terminated.

(4) A notification meeting the requirements of paragraphs (d) (1) and (2) of this section will revise the unit's permit in accordance with §72.83 (administrative permit amendment).

[58 FR 3650, Jan. 11, 1993, as amended at 60 FR 17113, Apr. 4, 1995]

§72.41 Phase I substitution plans.

(a) *Applicability.* This section shall apply during Phase I to the designated representative of:

(1) Any unit listed in Table 1 of §73.10(a) of this chapter; and

(2) Any other existing utility unit that is an affected unit under this part, provided that this section shall not apply to a unit under section 410 of the Act.

(b)(1) The designated representative may include, in the Acid Rain permit application for a unit under paragraph (a)(1) of this section, a substitution plan under which one or more units under paragraph (a)(2) of this section are designated as substitution units, provided that:

(i) Each unit under paragraph (a)(2) of this section is under the control of the owner or operator of each unit under paragraph (a)(1) of this section that designates the unit under paragraph (a)(2) of this section as a substitution unit; and

(ii) In accordance with paragraph (c)(3) of this section, the emissions reductions achieved under the plan shall be the same or greater than would have

been achieved by all units governed by the plan without such plan.

(2) The designated representative of each source with a unit designated as a substitution unit in any plan submitted under paragraph (b)(1) of this section shall incorporate in the permit application each such plan.

(3) The designated representative may submit a substitution plan not later than 90 days, or a notification to activate a conditionally approved plan in accordance with § 72.40(c) not later than 60 days, before the allowance transfer deadline applicable to the first year for which the plan is to take effect.

(c) *Contents of a substitution plan.* A complete substitution plan shall include the following elements in a format prescribed by the Administrator:

(1) Identification of each unit under paragraph (a)(1) of this section and each substitution unit to be governed by the substitution plan. A unit shall not be a substitution unit in more than one substitution plan.

(2) Except where the designated representative requests conditional approval of the plan, the first calendar year and, if known, the last calendar year in which the substitution plan is to be in effect. Unless the designated representative specifies an earlier calendar year, the last calendar year will be deemed to be 1999.

(3) Demonstration that the total emissions reductions achieved under the substitution plan will be equal to or greater than the total emissions reductions that would have been achieved without the plan, as follows:

(i) For each substitution unit:

(A) The unit's baseline.

(B) Each of the following: the unit's 1985 actual SO_2 emissions rate; the unit's 1985 allowable SO_2 emissions rate; the unit's 1989 actual SO_2 emissions rate; the unit's 1990 actual SO_2 emissions rate; and, as of November 15, 1990, the most stringent unit-specific federally enforceable or State enforceable SO_2 emissions limitation covering the unit for 1995–1999. For purposes of determining the most stringent emissions limitation, applicable emissions limitations shall be converted to lbs/mmBtu in accordance with appendix B of this part. Where the most stringent emissions limitation is not the same for every year in 1995–1999, the most stringent emissions limitation shall be stated separately for each year.

(C) The lesser of: the unit's 1985 actual SO_2 emissions rate; the unit's 1985 allowable SO_2 emissions rate; the greater of the unit's 1989 or 1990 actual SO_2 emissions rate; or, as of November 15, 1990, the most stringent unit-specific federally enforceable or State enforceable SO_2 emissions limitation covering the unit for 1995–99. Where the most stringent emissions limitation is not the same for every year during 1995–1999, the lesser of the emissions rates shall be determined separately for each year using the most stringent emissions limitation for that year.

(D) The product of the baseline in paragraph (c)(3)(i)(A) of this section and the emissions rate in paragraph (c)(3)(i)(C) of this section, divided by 2000 lbs/ton. Where the most stringent emissions limitation is not the same for every year during 1995–1999, the product in the prior sentence shall be calculated separately for each year using the emissions rate determined for that year in paragraph (c)(3)(i)(C) of this section.

(ii)(A) The sum of the amounts in paragraph (c)(3)(i)(D) of this section for all substitution units to be governed by the plan. Except as provided in paragraph (c)(3)(ii)(B) of this section, this sum is the total number of allowances available each year under the substitution plan.

(B) Where the most stringent unit-specific federally enforceable or State enforceable SO_2 emissions limitation is not the same for every year during 1995–1999, the sum in paragraph (c)(3)(ii)(A) of this section shall be calculated separately for each year using the amounts calculated for that year in paragraph (c)(3)(i)(D) of this section. Each separate sum is the total number of allowances available for the respective year under the substitution plan.

(iii) Where, as of November 15, 1990, a non-unit-specific federally enforceable or State enforceable SO_2 emissions limitation covers the unit for any year

during 1995–1999, the designated representative shall state each such limitation and propose a method for applying the unit-specific and non-unit-specific emissions limitations under paragraph (d) of this section.

(4) Distribution of substitution allowances. (i) A statement that the allowances in paragraph (c)(3)(ii) of this section are not to be distributed to any units under paragraph (a)(1) of this section that are to be governed by the plan; or

(ii) A list showing any annual distribution of the allowances in paragraph (c)(3)(ii) of this section from a substitution unit to a unit under paragraph (a)(1) of this section that, under the plan, designates the substitution unit.

(5) A demonstration that the substitution plan meets the requirement that each unit under paragraph (a)(2) of this section is under the control of the owner or operator of each unit under paragraph (a)(1) of this section that designates the unit under paragraph (a)(2) of this section as a substitution unit. The demonstration shall be one of the following:

(i) If the unit under paragraph (a)(1) of this section has one or more owners or operators that have an aggregate percentage ownership interest of 50 percent or more in the capacity of the unit under paragraph (a)(2) of this section or the units have a common operator, a statement identifying such owners or operators and their aggregate percentage ownership interest in the capacity of the unit under paragraph (a)(2) of this section or identifying the units' common operator. The designated representative shall submit supporting documentation upon request by the Administrator.

(ii) If the unit under paragraph (a)(1) of this section has one or more owners or operators that have an aggregate percentage ownership interest of at least 10 percent and less than 50 percent in the capacity of the unit under paragraph (a)(2) of this section and the units do not have a common operator, a statement identifying such owners or operators and their aggregate percentage ownership interest in the capacity of the unit under paragraph (a)(2) of this seciton and stating that each such owner or operator has the contractual right to direct the dispatch of the electricity that, because of its ownership interest, it has the right to receive from the unit under paragraph (a)(2) of this section. The fact that the electricity that such owner or operator has the right to receive is centrally dispatched through a power pool will not be the basis for determining that the owner or operator does not have the contractual right to direct the dispatch of such electricity. The designated representative shall submit supporting documentation upon request by the Administrator.

(iii) A copy of an agreement that is binding on the owners and operators of the unit under paragraph (a)(2) of this section and the owners and operators of the unit under paragraph (a)(1) of this section, provides each of the following elements, and is supported by documentation meeting the requirements of paragraph (c)(6) of this section:

(A) The owners and operators of the unit under paragraph (a)(2) of this section must not allow the unit to emit sulfur dioxide in excess of a maximum annual average SO_2 emissions rate (in lbs/mmBtu), specified in the agreement, for each year during the period that the substitution plan is in effect.

(B) The maximum annual average SO_2 emissions rate for the unit under paragraph (a)(2) of this section shall not exceed 70 percent of the lesser of: the unit's 1985 actual SO_2 emissions rate; the unit's 1985 allowable SO_2 emissions rate; the greater of the unit's 1989 or 1990 actual SO_2 emissions rate; the most stringent federally enforceable or State enforceable SO_2 emissions limitation, as of November 15, 1990, applicable to the unit in Phase I; or the lesser of the average actual SO_2 emissions rate or the most stringent federally enforceable or State enforceable SO_2 emissions limitation for the unit for four consecutive quarters that immediately precede the 30-day period ending on the date the substitution plan is submitted to the Administrator. If the unit is covered by a non-unit-specific federally enforceable or State enforceable SO_2 emissions limitation in the four consecutive quarters or, as of November 15, 1990, in Phase I,

the Administrator will determine, on a case-by-case basis, how to apply the non-unit-specific emissions limitation for purposes of determining whether the maximum annual average SO_2 emissions rate meets the requirement of the prior sentence. If a non-unit-specific federally enforceable SO_2 emissions limitation is not different from a non-unit-specific federally enforceable SO_2 emissions limitation that was effective and applicable to the unit in 1985, the Administrator will apply the non-unit-specific SO_2 emissions limitation by using the 1985 allowable SO_2 emissions rate.

(C) For each year that the actual SO_2 emissions rate of the unit under paragraph (a)(2) of this section exceeds the maximum annual average SO_2 emissions rate, the designated representative of the unit under paragraph (a)(1) of this section must surrender allowances for deduction from the Allowance Tracking System account of the unit under paragraph (a)(1) of this section. The designated representative shall surrender allowances authorizing emissions equal to the baseline of the unit under paragraph (a)(2) of this section multiplied by the difference between the actual SO_2 emissions rate of the unit under paragraph (a)(2) of this section and the maximum annual average SO_2 emissions rate and divided by 2000 lbs/ton. The surrender shall be made by the allowance transfer deadline of the year of the exceedance, and the surrendered allowances shall have the same or an earlier compliance use date as the allowances allocated to the unit under paragraph (a)(2) of this section for that year. The designated representative may identify the serial numbers of the allowances to be deducted. In the absence of such identification, allowances will be deducted on a first-in, first-out basis under § 73.35(c)(2) of this chapter.

(D) The unit under paragraph (a)(2) of this section and the unit under paragraph (a)(1) of this section shall designate a common designated representative during the period that the substitution plan is in effect. Having a common alternate designated representative shall not satisfy the requirement in the prior sentence.

(E) Except as provided in paragraph (c)(6)(i) of this section, the actual SO_2 emissions rate for any year and the average actual SO_2 emissions rate for any period shall be determined in accordance with part 75 of this chapter.

(6) A demonstration under paragraph (c)(5)(iii) of this section shall include the following supporting documentation:

(i) The calculation of the average actual SO_2 emissions rate and the most stringent federally enforceable or State enforceable SO_2 emissions limitation for the unit for the four consecutive quarters that immediately preceded the 30-day period ending on the date the substitution plan is submitted to the Administrator. To the extent that the four consecutive quarters include a quarter prior to January 1, 1995, the SO_2 emissions rate for the quarter shall be determined applying the methodology for calculating SO_2 emissions set forth in appendix C of this part. This methodology shall be applied using data submitted for the quarter to the Secretary of Energy on United States Department of Energy Form 767 or, if such data has not been submitted for the quarter, using the data prepared for such submission for the quarter.

(ii) A description of the actions that will be taken in order for the unit under paragraph (a)(2) of this section to comply with the maximum annual average SO_2 emissions rate under paragraph (c)(5)(iii) of this section.

(iii) A description of any contract for implementing the actions described in paragraph (c)(6)(ii) of this section that was executed before the date on which the agreement under paragraph (c)(5)(iii) of this section is executed. The designated representative shall state the execution date of each such contract and state whether the contract is expressly contingent on the agreement under paragraph (c)(5)(iii) of this section.

(iv) A showing that the actions described under paragraph (c)(6)(ii) of this section will not be implemented during Phase I unless the unit is approved as a substitution unit.

(7) The special provisions in paragraph (e) of this section.

(d) *Administrator's action.* (1) If the Administrator approves a substitution plan, he or she will allocate allowances to the Allowance Tracking System accounts of the units under paragraph (a)(1) of this section and substitution units, as provided in the approved plan, upon issuance of an Acid Rain permit containing the plan, except that if the substitution plan is conditionally approved, the allowances will be allocated upon revision of the permit to activate the plan.

(2) In no event shall allowances be allocated to a substitution unit, under an approved substitution plan, for any year in excess of the sum calculated and applicable to that year under paragraph (c)(3)(ii) of this section, as adjusted by the Administrator in approving the plan.

(3) Where, as of November 15, 1990, a non-unit-specific federally enforceable or State enforceable SO_2 emissions limitation covers the unit for any year during 1995–1999, the Administrator will specify on a case-by-case basis a method for using unit-specific and non-unit-specific emissions limitations in allocating allowances to the substitution unit. The specified method will not treat a non-unit-specific emissions limitation as a unit-specific emissions limitation and will not result in substitution units retaining allowances allocated under paragraph (d)(1) of this section for emissions reductions necessary to meet a non-unit- specific emissions limitation. Such method may require an end-of-year review and the adjustment of the allowances allocated to the substitution unit and may require the designated representative of the substitution unit to surrender allowances by the allowance transfer deadline of the year that is subject to the review. Any surrendered allowances shall have the same or an earlier compliance use date as the allowances originally allocated for the year, and the designated representative may identify the serial numbers of the allowances to be deducted. In the absence of such identification, such allowances will be deducted on a first-in, first-out basis under § 73.35(c)(2) of this chapter.

(e) *Special provisions*—(1) *Emissions Limitations.* (i) Each substitution unit governed by an approved substitution plan shall become a Phase I unit from January 1 of the year for which the plan takes effect until January 1 of the year for which the plan is no longer in effect or is terminated. The designated representative of a substitution unit shall surrender allowances, and the Administrator will deduct allowances, in accordance with paragraph (d)(3) of this section.

(ii) Each unit under paragraph (a)(1) of this section, and each substitution unit, governed by an approved substitution plan shall be subject to the Acid Rain emissions limitations for nitrogen oxides in accordance with section 407 of the Act and regulations implementing section 407 of the Act.

(iii) Where an approved substitution plan includes a demonstration under paragraphs (c)(5)(iii) and (c)(6) of this section.

(A) The owners and operators of the substitution unit covered by the demonstration shall implement the actions described under paragraph (c)(6)(ii) of this section, as adjusted by the Administrator in approving the plan or in revising the permit. The designated representative may submit proposed permit revisions changing the description of the actions to be taken in order for the substitution unit to achieve the maximum annual average SO_2 emissions rate under the approved plan and shall include in any such submission a showing that the actions in the changed description will not be implemented during Phase I unless the unit remains a substitution unit. The permit revision will be treated as an administrative amendment, except where the Administrator determines that the change in the description alters the fundamental nature of the actions to be taken and that public notice and comment will contribute to the decision-making process, in which case the permit revision will be treated as a permit modification or, at the option of the designated representative, a fast-track modification.

(B) The designated representative of the unit under paragraph (a)(1) of this section shall surrender allowances, and theAdministrator will deduct allowances, in accordance with paragraph

(c)(5)(iii)(C) of this section. The surrender and deduction of allowances as required under the prior sentence shall be the only remedy under the Act for a failure to meet the maximum annual average SO_2 emissions rate, provided that, if such deduction of allowance results in excess emissions, the remedies for excess emissions shall be fully applicable.

(2) *Liability*. The owners and operators of a unit governed by an approved substitution plan shall be liable for any violation of the plan or this section at that unit or any other unit that is the first unit's substitution unit or for which the first unit is a substitution unit under the plan, including liability for fulfilling the obligations specified in part 77 of this chapter and section 411 of the Act.

(3) *Termination*. (i) A substitution plan shall be in effect only in Phase I for the calendar years specified in the plan or until the calendar year for which a termination of the plan takes effect, provided that no substitution plan shall be terminated, and no unit shall be de-designated as a substitution unit, before the end of Phase I if the substitution unit serves as a control unit under a Phase I extension plan.

(ii) To terminate a substitution plan for a given calendar year prior to the last year for which the plan was approved:

(A) A notification to terminate in accordance with § 72.40(d) shall be submitted no later than 60 days before the allowance transfer deadline applicable to the given year; and

(B) In the notification to terminate, the designated representative of each unit governed by the plan shall state that he or she surrenders for deduction from the unit's Allowance Tracking System account allowances equal in number to, and with the same or an earlier compliance use date as, those allocated under paragraph (d)(1) of this section for all calendar years for which the plan is to be terminated. The designated representative may identify the serial numbers of the allowances to be deducted. In the absence of such identification, allowances will be deducted on a first-in, first-out basis under § 73.35(c)(2) of this chapter.

(iii) If the requirements of paragraph (e)(3)(ii) of this section are met and upon revision of the permit to terminate the substitution plan, the Administrator will deduct the allowances specified in paragraph (e)(3)(ii)(B) of this section. No substitution plan shall be terminated, and no unit shall be de-designated as a Phase I unit, unless such deduction is made.

(iv)(A) If there is a change in the ownership interest of the owners or operators of any unit under a substitution plan approved as meeting the requirements of paragraph (c)(5)(i) or (ii) of this section or a change in such owners' or operators' right to direct dispatch of electricity from a substitution unit under such a plan and the demonstration under paragraph (c)(5)(i) or (ii) of this section cannot be made, then the designated representatives of the units governed by this plan shall submit a notification to terminate the plan so that the plan will terminate as of January 1 of the calendar year during which the change is made.

(B) Where a substitution plan is approved as meeting the requirements of paragraph (c)(5)(iii) of this section, if there is a change in the agreement under paragraph (c)(5)(iii) of this section and a demonstration that the agreement, as changed, meets the requirements of paragraph (c)(5)(iii) cannot be made, then the designated representative of the units governed by the plan shall submit a notification to terminate the plan so that the plan will terminate as of January 1 of the calendar year during which the change is made. Where a substitution plan is approved as meeting the requirements of paragraph (c)(5)(iii) of this section, if the requirements of the first sentence of paragraph (e)(1)(iii)(A) of this section are not met during a calendar year, then the designated representative of the units governed by the plan shall submit a notification to terminate the plan so that the plan will terminate as of January 1 of such calendar year.

(C) If the plan is not terminated in accordance with paragraphs (e)(3)(iv)(A) or (B) of this section, the

Administrator, on his or her own motion, will terminate the plan and deduct the allowances required to be surrendered under paragraph (e)(3)(ii) of this section.

(D) Where a substitution unit and the Phase I unit designating the substitution unit in an approved substitution plan have a common owner, operator, or designated representative during a year, the plan shall not be terminated under paragraphs (e)(3)(iv)(A), (B), or (C) of this section with regard to the substitution unit if the year is as specified in paragraph (e)(3)(iv)(D)(*1*) or (*2*) of this section and the unit received from the Administrator for the year, under the Partial Settlement in *Environmental Defense Fund* v. *Carol M. Browner*, No. 93–1203 (D.C. Cir. 1993) (signed May 4, 1993), a total number of allowances equal to the unit's baseline multiplied by the lesser of the unit's 1985 actual SO_2 emissions rate or 1985 allowable SO_2 emissions rate.

(*1*) Except as provided in paragraph (e)(3)(iv)(D)(*2*) of this section, paragraph (e)(3)(iv)(D) of this section shall apply to the first year in Phase I for which the unit is and remains an active substitution unit.

(*2*) If the unit has a Group 1 boiler under part 76 of this chapter and is and remains an active substitution unit during 1995, paragraph (e)(3)(iv)(D) of this section shall apply to 1995 and to the second year in Phase I for which the unit is and remains an active substitution unit.

(*3*) If there is a change in the owners, operators, or designated representative of the substitution unit or the Phase I unit during a year under paragraph (e)(3)(iv)(D)(*1*) or (*2*) of this section and, with the change, the units do not have a common owner, operator, or designated representative, then the designated representatives for such units shall submit a notification to terminate the plan so that the plan will terminate as of January 1 of the calendar year during which the change is made. If the plan is not terminated in accordance with the prior sentence, the Administrator, on his or her own motion, will terminate the plan and deduct the allowances required to be surrendered under paragraph (e)(3)(ii) of this section.

[58 FR 3650, Jan. 11, 1993, as amended at 58 FR 40747, July 30, 1993; 59 FR 60230, 60238, Nov. 22, 1994]

§72.42 Phase I extension plans.

(a) *Applicability*. (1) This section shall apply to any designated representative seeking a 2-year extension of the deadline for meeting Phase I sulfur dioxide emissions reduction requirements at any of the following types of units by applying for allowances from the Phase I extension reserve:

(i) A unit listed in Table 1 of §73.10(a) of this chapter;

(ii) A unit designated as a substitution unit in accordance with §72.41; or

(iii) A unit designated as a compensating unit in accordance with §72.43, except a compensating unit that is a new unit.

(2) A unit for which a Phase I extension is sought shall be either:

(i) A control unit, which shall be a unit under paragraph (a)(1) of this section and at which qualifying Phase I technology shall commence operation on or after November 15, 1990 but not later than December 31, 1996; or

(ii) A transfer unit, which shall be a unit under paragraph (a)(1)(i) of this section and whose Phase I emissions reduction obligation shall be transferred in whole or in part to one or more control units.

(3) A Phase I extension does not exempt the owner or operator for any unit governed by the Phase I extension plan from the requirement to comply with such unit's Acid Rain emissions limitations for sulfur dioxide.

(b) To apply for a Phase I extension:

(1) The designated representative for each source with a control unit may submit an early ranking application for a Phase I extension plan in person, beginning on the 40th day after publication of this subpart in the FEDERAL REGISTER, between the hours of 9 a.m. and 5 p.m. Eastern Standard Time at Acid Rain Division, Attn: Early Ranking, U.S. Environmental Protection Agency, 501 3rd Street NW., 4th floor, Washington, DC; or send the application by regular mail, certified mail, or overnight delivery service to Acid Rain

Division, Attn: Early Ranking, U.S. Environmental Protection Agency, 6204 J, 401 M Street, SW., Washington, DC 20460.

(2) By February 15, 1993:

(i) The designated representative for each source with a control unit shall submit a Phase I extension plan as a part of the Acid Rain permit application for the source, and

(ii) The designated representative for each source with a unit designated as a transfer unit in any plan submitted under paragraph (b)(2)(i) of this section shall incorporate in the Acid Rain permit application each such plan.

(c) *Contents of early ranking application.* A complete early ranking application shall include the following elements in a format prescribed by the Administrator:

(1) Identification of each control unit. All control units in an application must be located at the same source. If the control unit is not a unit under paragraph (a)(1)(i) of this section, a substitution plan or a reduced utilization plan governing the unit shall be submitted by the deadline for submitting a Phase I permit application.

(2) Identification of each transfer unit. A unit shall not be a transfer unit in more than one early ranking application.

(3) For each control and transfer unit, the total tonnage of sulfur dioxide emitted in 1988 plus the total tonnage of sulfur dioxide emitted in 1989, divided by 2. The 1988 and 1989 tonnage figures shall be consistent with the data filed on EIA form 767 for those years and the conversion methodology specified in Appendix B of this part.

(4) For each control and transfer unit:

(i) The projected annual utilization (in mmBtu) for 1995 multiplied by the projected uncontrolled emissions rate (i.e., the emissions rate in the absence of title IV of the Act) for 1995 (in lbs/mmBtu), divided by 2000 lbs/ton.

(ii) The projected annual utilization (in mmBtu) for 1996 multiplied by the projected uncontrolled emissions rate (i.e., the emissions rate in the absence of title IV of the Act) for 1996 (in lbs/mmBtu), divided by 2000 lbs/ton.

(5) For each control and transfer unit, the number of Phase I extension reserve allowances requested for 1995 and for 1996, not to exceed the difference between:

(i) The lesser of the value for the unit under paragraph (c)(3) of this section and the value for the unit for that year under paragraph (c)(4) of this section, and

(ii) Each unit's baseline multiplied by 2.5 lb/mmBtu, divided by 2000 lbs/ton.

(6) Documentation that the annual emissions reduction obligations transferred from all transfer units to all control units do not exceed those authorized under this section, as follows:

(i) For each control unit, the difference, calculated separately for 1995 and 1996, between:

(A) The control unit's allowance allocation in Table 1 of § 73.10(2) of this chapter, the allocation under § 72.41 if the control unit is a substitution unit, or the allocation under § 72.43 if the control unit is a compensating unit; and

(B) The projected emissions resulting from 90% control after installing the qualifying Phase I technology, i.e., 10% of the projected uncontrolled emissions for the control unit for the year in accordance with paragraph (c)(4) of this section.

(ii) The sum, by year, of the results under paragraph (c)(6)(i) of this section for all control units.

(iii) The sum, by year, of Phase I extension reserve allowances requested for all transfer units.

(iv) A showing that, for each year, the sum under paragraph (c)(6)(ii) of this section is greater than or equal to the sum under paragraph (c)(6)(iii) of this section.

(7) For each control and transfer unit, the projected controlled emissions for 1997, for 1998, and for 1999 calculated as follows:

Projected annual utilization (in mmBtu) multiplied by the projected controlled emission rate (in lbs/mmBtu), divided by 2000 lbs/ton.[1]

[1] In the case of a transfer unit that shares a common stack with a unit not listed in Table 1 of § 73.10(a) of this chapter and whose

(8) For each control unit, the number of Phase I extension reserve allowances requested for 1997, for 1998, and for 1999, calculated as follows:

The unit's baseline multiplied by 1.2 lbs/mmBtu and divided by 2000 lbs/ton, minus the projected controlled emissions (in tons/yr) under paragraph (c)(7) of this section for the given year.

(9) The total of Phase I extension reserve allowances requested for all units in the plan for 1995 through 1999.

(10) With regard to each executed contract for the design engineering and construction of qualifying Phase I technology at each control unit governed by the early ranking application, either a copy of the contract or a certification that the contract is on site at the source and will be submitted to the Administrator upon written request. The contract or contracts may be contingent on the Administrator approving the Phase I extension plan.

(11) For each contract for which a certification is submitted under paragraph (c)(10) of this section, a binding letter agreement, signed and dated by each party and specifying:

(i) The type of qualifying Phase I technology to which the contract applies;

(ii) The parties to the contract;

(iii) The date each party executed the contracts;

(iv) The unit to which the contract applies;

(v) A brief list identifying each provision of the contract;

(vi) Any dates to which the parties agree, including construction completion date; and

(vii) The total dollar amount of the contract.

(12) A vendor certification of the sulfur dioxide removal efficiency guaranteed to be achievable by the qualifying Phase I technology for the type and range of fossil fuels (before any treatment prior to combustion) that will be used at the control unit; *provided* that a vendor certification shall not be a defense against a control unit's failure to achieve 90% control of sulfur dioxide.

(13) The date (not later than December 31, 1996) on which the owners and operators plan to commence operation of the qualifying Phase I technology.

(14) The special provisions of paragraph (f) of this section.

(d) *Contents of Phase I extension plan.* A complete Phase I extension plan shall include the following elements in a format prescribed by the Administrator:

(1) Identification of each unit in the plan.

(2)(i) A statement that the elements in the Phase I extension plan are identical to those in the previously submitted early ranking application for the plan and that such early ranking application is incorporated by reference; or

(ii) All elements that are different from those in the previously submitted early ranking application for the plan and a statement that the early ranking application is incorporated by reference as modified by the newly submitted elements; *provided* that the Phase I extension plan shall not add any new control units or increase the total Phase I extension allowances requested; or

(iii) All elements required for an early ranking application and a statement that no early ranking application for the plan was submitted.

(e) *Administrator's action.* (1) *Early ranking applications.* (i) The Administrator may approve in whole or in part or with changes or conditions, as appropriate, or disapprove an early ranking application.

(ii) The Administrator will act on each early ranking application in the order of receipt.

(iii) The Administrator will determine the order of receipt by the following procedures:

(A) Hand-delivered submissions and mailed submissions will be deemed to have been received on the date they are received by the Administrator; *provided* that all submissions received by the Administrator prior to the 40th day after publication of this subpart in the FEDERAL REGISTER will be deemed received on the 40th day.

(B) All submissions received by the Administrator on the same day will be

---

emissions of sulfur dioxide are not monitored separately or apportioned in accordance with part 75 of this chapter, the projected figures for the transfer unit under paragraph (c)(7) of this section must be for the units combined.

deemed to have been received simultaneously.

(C) The order of receipt of all submissions received simultaneously will be determined by a public lottery if allocation of Phase I extension reserve allowances to each of the simultaneous submissions would result in oversubscription of the Phase I extension reserve.

(iv) Based on the allowances requested under paragraph (c)(9) of this section, as adjusted by the Administrator in approving the early ranking application, the Administrator will award Phase I extension reserve allowances for each complete early ranking application to the extent that allowances that have not been awarded remain in the Phase I extension reserve at the time the Administrator acts on the application. The allowances will be awarded in accordance with the procedures set forth the allocation of reserve allowances in paragraph (e)(3) of this section.

(v) The Administrator's action on an early ranking application shall be conditional on the Administrator's action on a timely and complete Acid Rain permit application that includes a complete Phase I extension plan and, where the plan includes a unit under paragraph (a)(1) (ii) and (iii) of this section, a complete substitution plan or reduced utilization plan, as appropriate.

(vi) Not later than 15 days after receipt of each early ranking application, the Administrator will notify, in writing, the designated representative of each application of the date that the early ranking application was received and one of the following:

(A) The award of allowances if the application was complete and the Phase I extension reserve as not oversubscribed;

(B) A determination that the application was incomplete and is disapproved; or

(C) If the Phase I extension reserve was oversubscribed, a list of the applications received on that date, the number of Phase I extension allowances requested in each application, and the date, time, and location of a lottery to determine the order of receipt for all applications received on that date.

(vii) The date of a lottery for all applications received on a given day will not be earlier than 15 days after the Administrator notifies each designated representative whose applications were received on that date.

(viii) Any early ranking application may be withdrawn from the lottery if a letter signed by the designated representative of each unit governed by the application and requesting withdrawal is received by the Administrator before the lottery takes place.

(2) *Phase I extension plans.* (i) The Administrator will act on each Phase I extension plan in the order that the early ranking application for that plan was received or, if no early ranking application was received, in the order that the Phase I extension plan was received, as determined under paragraph (e)(1)(iii) of this section.

(ii) Based on the allowances requested under paragraph (c)(9) of this section, as adjusted under paragraph (d) of this section and by the Administrator in approving the Phase I extension plan, the Administrator will allocate Phase I extension reserve allowances to the Allowance Tracking System account of each control and transfer unit upon issuance of an Acid Rain permit containing the approved Phase I extension plan. The allowances will be allocated using the procedures set forth in paragraph (e)(3) of this section.

(iii) The Administrator will not approve a Phase I extension plan, even if it meets the requirements of this section, unless unallocated allowances remain in the Phase I extension reserve at the time the Administrator acts on the plan.

(3) *Allowance allocations.* In addition to any allowances allocated in accordance with Table 1 of § 73.10(a) of this chapter and other approved compliance options, the Administrator will allocate Phase I extension reserve allowances to each eligible unit in a Phase I extension plan in the following order.

(i) For 1995, to each control unit in the order in which it is listed in the plan and then to each transfer unit in the order in which it is listed.

(ii) For 1996, to each control unit in the order in which it is listed in the plan and then to each transfer unit in the order in which it is listed.

(iii) For 1997, to each control unit in the order in which it is listed in the plan, then likewise for 1998, and then likewise for 1999.

(iv) The Administrator will allocate any Phase I extension reserve allowances returned to the Administrator to the next Phase I extension plan, in the rank order established under paragraph (e)(1)(iii) of this section, that continues to meet the requirements of this section and this part.

(f) *Special provisions*—(1) *Emissions Limitations*—(i) *Sulfur Dioxide.*

(A) If a control or transfer unit governed by an approved Phase I extension plan emits in 1997, 1998, or 1999 sulfur dioxide in excess of the projected controlled emissions for the unit specified for the year under paragraph (c)(7) of this section as adjusted under paragraph (d) of this section and by the Administrator in approving the Phase I extension plan, the Administrator will deduct allowances equal to such exceedence from the unit's annual allowance allocation in the following calendar year.[2]

(B) Failure to demonstrate at least a 90% reduction of sulfur dioxide in 1997, 1998, or 1999 in accordance with part 75 of this chapter at a control unit governed by an approved Phase I extension plan shall be a violation of this section. In the event of any such violation, in addition to any other liability under the Act, the Administrator will deduct allowances from the control unit's compliance subaccount for the year of the violation. The deduction will be calculated as follows:

Allowances deducted=(1−(percent reduction achieved•90%))×Phase I extension reserve allowances received

where:

''Percent reduction achieved'' is the percent reduction determined in accordance with part 75 of this chapter.

''Phase I extension reserve allowances received'' is the number of Phase I extension reserve allowances allocated for the year under paragraph (e)(2)(ii) of this section.

(ii) *Nitrogen Oxides.*

(A) Beginning on January 1, 1997, each control and transfer unit shall be subject to the Acid Rain emissions limitations for nitrogen oxides.

(B) Notwithstanding paragraph (f)(1)(ii)(A) of this section, a transfer unit shall be subject to the Acid Rain emissions limitations for nitrogen oxides, under section 407 of the Act and regulations implementing section 407 of the Act, beginning on January 1 of any year for which a transfer unit is allocated fewer Phase I extension reserve allowances than the maximum amount that the designated representative could have requested in accordance with paragraph (c)(5) of this section (as adjusted under paragraph (d) of this section and by the Administrator in approving the Phase I extension plan) unless the transfer unit is the last unit allocated Phase I extension reserve allowances under the plan.

(2) *Monitoring requirements.* Each control unit shall comply with the special monitoring requirements for Phase I extension plans in accordance with part 75 of this chapter.

(3) *Reporting requirements.* Each control and transfer unit shall comply with the special reporting requirements for Phase I extension plans in accordance with § 72.93.

(4) *Liability.* The owners and operators of a control or transfer unit governed by an approved Phase I extension plan shall be liable for any violation of the plan or this section at that or any other unit governed by the plan, including liability for fulfilling the obligations specified in part 77 of this chapter and section 411 of the Act.

(5) *Termination.* A Phase I extension plan shall be in effect only in Phase I, and no Phase I extension plan shall be terminated before the end of Phase I. The designated representative may, however, withdraw a Phase I extension plan at any time prior to issuance of the Phase I Acid Rain permit that includes the Phase I extension plan, as adjusted.

[2] In the case of a transfer unit that shares a common stack with a unit not listed in Table 1 of § 73.10(a) of this chapter where the units are not monitored separately or apportioned in accordance with part 75 of this chapter, the combined emissions of both units will be deemed to be the transfer unit's emissions for purposes of applying paragraph (f)(1)(i) of this section.

§ 72.43 Phase I reduced utilization plans.

(a) *Applicability*. This section shall apply to the designated representative of:

(1) Any Phase I unit, including:

(i) Any unit listed in Table 1 of § 73.10(a) of this chapter; and

(ii) Any other unit that becomes a Phase I unit (including any unit designated as a compensating unit under this section or a substitution unit under § 72.41).

(2) Any affected unit that:

(i) Is not otherwise subject to any Acid Rain emissions limitation or emissions reduction requirements during Phase I; and

(ii) Meets the requirement, as set forth in paragraphs (c)(4)(ii) and (d) of this section, that for each year for which the unit is to be covered by the reduced utilization plan, the unit's baseline divided by 2,000 lbs/ton and multiplied by the lesser of the unit's 1985 actual SO_2 emissions rate or 1985 allowable SO_2 emissions rate does not exceed the sum of

(A) The lesser of 10 percent of the amount under paragraph (a)(2)(ii) of this section or 200 tons, plus

(B) The unit's baseline divided by 2,000 lbs/ton and multiplied by the lesser of: The greater of the unit's 1989 or 1990 actual SO_2 emissions rate; or, as of November 15, 1990, the most stringent federally enforceable or State enforceable SO_2 emissions limitation covering the unit for 1995–1999.

(b)(1) The designated representative of any unit under paragraph (a)(1) of this section shall include in the Acid Rain permit application for the unit a reduced utilization plan, meeting the requirements of this section, when the owners and operators of the unit plan to:

(i) Reduce utilization of the unit below the unit's baseline to achieve compliance, in whole or in part, with the unit's Phase I Acid Rain emissions limitations for sulfur dioxide; and

(ii) Accomplish such reduced utilization through one or more of the following:

(A) Shifting generation of the unit to a unit under paragraph (a)(2) of this section or to a sulfur-free generator; or

(B) Using one or more energy conservation measures or improved unit efficiency measures.

(2)(i) Energy conservation measures shall be either demand-side measures implemented after December 31, 1987 in the residence or facility of a customer to whom the unit's utility system sells electricity or supply-side measures implemented after December 31, 1987 in facilities of the unit's utility system.

(ii) The utility system shall pay in whole or in part for the energy conservation measures either directly or, in the case of demand-side measures, through payment to another person who purchases the measure.

(iii) Energy conservation measures shall not include:

(A) Conservation programs that are exclusively informational or educational in nature;

(B) Load management measures that lead to reduction of electric energy demands during a utility's peak generating period, unless kilowatt hour savings can be verified under § 72.92;

or

(C) Utilization of industrial waste gases, unless the designated representative certifies that there is no net increase in sulfur dioxide emissions from such utilization.

(iv) For calendar years when the unit's utility system is a subsidiary of a holding company and the unit's dispatch system is or includes all units that are interconnected and centrally dispatched and included in that holding company, then:

(A) Energy conservation measures shall be either demand-side measures implemented in the residence or facility of a customer to whom any utility system in the holding company sells electricity or supply-side measures implemented in facilities of any utility system in the holding company. Such utility system shall pay in whole or in part for the measures either directly or, in the case of demand-side measures, through payment to another person who purchases the measures.

(B) The limitations in paragraph (b)(2)(iii) of this section shall apply.

(3)(i) Improved unit efficiency measures shall be implemented in the unit after December 31, 1987. Such measures include supply-side measures listed in

appendix A, section 2.1 of part 73 of this chapter.

(ii) The utility system shall pay in whole or in part for the improved unit efficiency measures.

(4) The requirement to submit a reduced utilization plan shall apply in the event that the owners and operators of a Phase I unit decide, at any time during any Phase I calendar year, to rely on the method of compliance in paragraph (b)(1) of this section. In that case, the designated representative shall submit a reduced utilization plan not later than 90 days, or a notification to activate a conditionally approved plan in accordance with § 72.40(c) not later than 60 days, before the allowance transfer deadline applicable to the first year for which the plan is to take effect.

(5) The designated representative of each source with a unit designated as a compensating unit in any plan submitted under paragraphs (b) (1) or (4) of this section shall incorporate by reference in the permit application each such plan.

(c) *Contents of reduced utilization plan.* A complete reduced utilization plan shall include the following elements in a format prescribed by the Administrator:

(1) Identification of each Phase I unit for which the owners and operators plan reduced utilization.

(2) Except where the designated representative requests conditional approval of the plan, the first calendar year and, if known, the last calendar year in which the reduced utilization plan is to be in effect. Unless the designated representative specifies an earlier calendar year, the last calendar year shall be deemed to be 1999.

(3) A statement whether the plan designates a compensating unit or relies on sulfur-free generation, any energy conservation measure, or any improved unit efficiency measure to account for any amount of reduced utilization.

(4) If the plan designates a compensating unit, or relies on sulfur-free generation, to account for any amount of reduced utilization:

(i) Identification of each compensating unit or sulfur-free generator.

(ii) For each compensating unit. (A) Each of the following: The unit's 1985 actual SO_2 emissions rate; the unit's 1985 allowable emissions rate; the unit's 1989 actual SO_2 emissions rate; the unit's 1990 actual SO_2 emissions rate; and, as of November 15, 1990, the most stringent unit-specific federally enforceable or State enforceable SO_2 emissions limitation covering the unit for 1995–1999. For purposes of determining the most stringent emissions limitation, applicable emissions limitations shall be converted to lbs/mmBtu in accordance with appendix B of this part. Where the most stringent emissions limitation is not the same for every year in 1995–1999, the most stringent emissions limitation shall be stated separately for each year.

(B) The unit's baseline divided by 2,000 lbs/ton and multiplied by the lesser of the unit's 1985 actual SO_2 emissions rate or 1985 allowable SO_2 emissions rate.

(C) The unit's baseline divided by 2000 lbs/ton and multiplied by the lesser of: The greater of the unit's 1989 or 1990 actual SO_2 emissions rate; or, as of November 15, 1990, the most stringent unit-specific federally enforceable or State enforceable SO_2 emissions limitation covering the unit for 1995–1999. Where the most stringent emissions limitation is not the same for every year in 1995–1999, the calculation in the prior sentence shall be made separately for each year.

(D) The difference between the amount under paragraph (c)(4)(ii)(B) of this section and the amount under paragraph (c)(4)(ii)(C) of this section. If the difference calculated in the prior sentence for any year exceeds the lesser of 10 percent of the amount under paragraph (c)(4)(ii)(B) of this section or 200 tons, the unit shall not be designated as a compensating unit for the year. Where the most stringent unit-specific federally enforceable or State enforceable SO_2 emissions limitation is not the same for every year in 1995–1999, the difference shall be calculated separately for each year.

(E) The allowance allocation calculated as the amount under paragraph (c)(4)(ii)(B) of this section. If the compensating unit is a new unit, it shall be deemed to have a baseline of zero and shall be allocated no allowances.

(F) Where, as of November 15, 1990, a non-unit-specific federally enforceable or State enforceable SO_2 emissions limitation covers the unit for any year in 1995–1999, the designated representative shall state each such limitation and propose a method for applying unit-specific and non-unit-specific emissions limitations under paragraph (d) of this section.

(iii) For each sulfur-free generator, identification of any other Phase I units that designate the same sulfur-free generator in another plan submitted under paragraph (b) (1) or (4) of this section.

(iv) For each compensating unit or sulfur-free generator not in the dispatch system of the unit reducing utilization under the plan, the system directives or power purchase agreements or other contractual agreements governing the acquisition, by the dispatch system, of the electrical energy that is generated by the compensating unit or sulfur-free generator and on which the plan relies to accomplish reduced utilization. Such contractual agreements shall identify the specific compensating unit or sulfur-free generator from which the dispatch system acquires such electrical energy.

(5) The special provisions in paragraph (f) of this section.

(d) *Administrator's action.* (1) If the Administrator approves the reduced utilization plan, he or she will allocate allowances, as provided in the approved plan, to the Allowance Tracking System account for any designated compensating unit upon issuance of an Acid Rain permit containing the plan, except that, if the plan is conditionally approved, the allowances will be allocated upon revision of the permit to activate the plan.

(2) Where, as of November 15, 1990, a non-unit-specific federally enforceable or State enforceable emissions limitation covers the unit for any year during 1995–1999, the Administrator will specify on a case-by-case basis a method for using unit-specific and non-unit specific emissions limitations in approving or disapproving the compensating unit. The specified method will not treat a non-unit-specific emissions limitation as a unit-specific emissions limitation and will not result in compensating units retaining allowances allocated under paragraph (d)(1) of this section for emissions reductions necessary to meet a non-unit-specific emissions limitation. Such method may require an end-of-year review and the disapproval and de-designation, and adjustment of the allowances allocated to, the compensating unit and may require the designated representative of the compensating unit to surrender allowances by the allowance transfer deadline of the year that is subject to the review. Any surrendered allowances shall have the same or an earlier compliance use date as the allowances originally allocated for the year, and the designated representative may identify the serial numbers of the allowances to be deducted. In the absence of such identification, such allowances will be deducted on a first-in, first-out basis under § 73.35(c)(2) of this chapter.

(e) *Failure to submit a plan.* The designated representative of a Phase I unit will be deemed not to violate, during a Phase I calendar year, the requirement to submit a reduced utilization plan under paragraph (b)(1) or (4) of this section if the designated representative complies with the allowance surrender and other requirements of §§ 72.33, 72.91, and 72.92 of this chapter.

(f) *Special provisions*—(1) *Emissions limitations.* (i) Any compensating unit designated under an approved reduced utilization plan shall become a Phase I unit from January 1 of the calendar year in which the plan takes effect until January 1 of the year for which the plan is no longer in effect or is terminated, except that such unit shall not become subject to the Acid Rain emissions limitations for nitrogen oxides in Phase I under section 407 of the Act and regulations implementing section 407 of the Act.

(ii) The designated representative of any Phase I unit (including a unit governed by a reduced utilization plan relying on energy conservation, improved unit efficiency, sulfur-free generation, or a compensating unit) shall surrender allowances, and the Administrator will deduct or return allowances, in accordance with paragraph (d)(2) of this section and subpart I of this part.

(2) *Reporting requirements.* The designated representative of any Phase I unit (including a unit governed by a reduced utilization plan relying on energy conservation, improved unit efficiency, sulfur-free generation, or a compensating unit) shall comply with the special reporting requirements under §§72.91 and 72.92.

(3) *Liability.* The owners and operators of a unit governed by an approved reduced utilization plan shall be liable for any violation of the plan or this section at that or any other unit governed by the plan, including liability for fulfilling the obligations specified in part 77 of this chapter and section 411 of the Act.

(4) *Termination.* (i) A reduced utilization plan shall be in effect only in Phase I for the calendar years specified in the plan or until the calendar year for which a termination of the plan takes effect; *provided* that no reduced utilization plan that designates a compensating unit that serves as a control unit under a Phase I extension plan shall be terminated, and no such unit shall be de-designated as a compensating unit, before the end of Phase I.

(ii) To terminate a reduced utilization plan for a given calendar year prior to its last year for which the plan was approved:

(A) A notification to terminate in accordance with §72.40(d) shall be submitted no later than 60 days before the allowance transfer deadline applicable to the given year; and

(B) In the notification to terminate, the designated representative of any compensating unit governed by the plan shall state that he or she surrenders for deduction from the unit's Allowance Tracking System account allowances equal in number to, and with the same or an earlier compliance use date as, those allocated under paragraph (d) of this section to each compensating unit for the calendar years for which the plan is to be terminated. The designated representative may identify the serial numbers of the allowances to be deducted. In the absence of such identification, allowances will be deducted on a first-in, first-out basis under §73.35(c)(2) of this chapter.

(iii) If the requirements of paragraph (f)(3)(ii) are met and upon revision of the permit to terminate the reduced utilization plan, the Administrator will deduct the allowances specified in paragraph (f)(3)(ii)(B) of this section. No reduced utilization plan shall be terminated, and no unit shall be de-designated as a Phase I unit, unless such deduction is made.

[58 FR 3650, Jan. 11, 1993, as amended at 59 FR 60230, Nov. 22, 1994; 60 FR 18470, Apr. 11, 1995]

§72.44 Phase II repowering extensions.

(a) *Applicability.* (1) This section shall apply to the designated representative of:

(i) Any existing affected unit that is a coal-fired unit and has a 1985 actual SO_2 emissions rate equal to or greater than 1.2 lbs/mmBtu.

(ii) Any new unit that will be a replacement unit, as provided in paragraph (b)(2) of this section, for a unit meeting the requirements of paragraph (a)(1)(i) of this section.

(iii) Any oil and/or gas-fired unit that has been awarded clean coal technology demonstration funding as of January 1, 1991 by the Secretary of Energy.

(2) A repowering extension does not exempt the owner or operator for any unit governed by the repowering plan from the requirement to comply with such unit's Acid Rain emissions limitations for sulfur dioxide.

(b) The designated representative of any unit meeting the requirements of paragraph (a)(1)(i) of this section may include in the unit's Phase II Acid Rain permit application a repowering extension plan that includes a demonstration that:

(1) The unit will be repowered with a qualifying repowering technology in order to comply with the Phase II emissions limitations for sulfur dioxide; or

(2) The unit will be replaced by a new utility unit that has the same designated representative and that is located at a different site using a qualified repowering technology and the existing unit will be permanently retired from service on or before the date on which the new utility unit commences commercial operation.

(c) In order to apply for a repowering extension, the designated representative of a unit under paragraph (a) of this section shall:

(1) Submit to the permitting authority, by January 1, 1996, a complete repowering extension plan;

(2) Submit to the Administrator, before June 1, 1997, a complete petition for approval of repowering technology; and

(3) If the repowering extension plan is submitted for conditional approval, submit by December 31, 1997, a notification to activate the plan in accordance with § 72.40(c).

(d) *Contents and Review of Petition for Approval of Repowering Technology.* (1) A complete petition for approval of repowering technology shall include the following elements, in a format prescribed by the Administrator, concerning the technology to be used in a plan under paragraph (b) of this section and may follow the repowering technology demonstration protocol issued by the Administrator:

(i) Identification and description of the technology.

(ii) Vendor certification of the guaranteed performance characteristics of the technology, including:

(A) Percent removal and emission rate of each pollutant being controlled;

(B) Overall generation efficiency; and

(C) Information on the state, chemical constituents, and quantities of solid waste generated (including information on land-use requirements for disposal) and on the availability of a market to which any by-products may be sold.

(iii) If the repowering technology is not listed in the definition of a qualified repowering technology in § 72.2, a vendor certification of the guaranteed performance characteristics that demonstrate that the technology meets the criteria specified for non-listed technologies in § 72.2; *provided* that the existence of such guarantee shall not be a defense against the failure to meet the criteria for non-listed technologies.

(2) The Administrator may request any supplemental information that is deemed necessary to review the petition for approval of repowering technology.

(3) The Administrator shall review the petition for approval of repowering technology and, in consultation with the Secretary of Energy, shall make a conditional determination of whether the technology described in the petition is a qualifying repowering technology.

(4) Based on the petition for approval of repowering technology and the information provided under paragraph (d)(2) of this section and § 72.94(a), the Administrator will make a final determination of whether the technology described in the petition is a qualifying repowering technology.

(e) *Contents of repowering extension plan.* A complete repowering extension plan shall include the following elements in a format prescribed by the Administrator:

(1) Identification of the existing unit governed by the plan.

(2) The unit's federally-approved State Implementation Plan sulfur dioxide emissions limitation.

(3) The unit's 1995 actual SO_2 emissions rate.

(4) A schedule for construction, installation, and commencement of operation of the repowering technology approved or submitted for approval under paragraph (d) of this section, with dates for the following milestones:

(i) Completion of design engineering;

(ii) For a plan under paragraph (b)(1) of this section, removal of the existing unit from operation to install the qualified repowering technology;

(iii) Commencement of construction;

(iv) Completion of construction;

(v) Start-up testing;

(vi) For a plan under paragraph (b)(2) of this section, shutdown of the existing unit; and

(vii) Commencement of commercial operation of the repowering technology.

(5) For a plan under paragraph (b)(2) of this section:

(i) Identification of the new unit. A new unit shall not be included in more than one repowering extension plan.

(ii) Certification that the new unit will replace the existing unit.

(iii) Certification that the new unit has the same designated representative as the existing unit.

(iv) Certification that the existing unit will be permanently retired from service on or before the date the new unit commences commercial operation.

(6) The special provisions of paragraph (h) of this section.

(f) *Permitting authority's action on repowering extension plan.* (1) The permitting authority shall not approve a repowering extension plan until the Administrator makes a conditional determination that the technology is a qualified repowering technology, unless the permitting authority conditionally approves such plan subject to the conditional determination of the Administrator.

(2) *Permit issuance.* (i) Upon a conditional determination by the Administrator that the technology to be used in the repowering extension plan is a qualified repowering technology and a determination by the permitting authority that such plan meets the requirements of this section, the permitting authority shall issue the Acid Rain portion of the operating permit including:

(A) The approved repowering extension plan; and

(B) A schedule of compliance with enforceable milestones for construction, installation, and commencement of operation of the repowering technology and other requirements necessary to ensure that Phase II emission reduction requirements under this section will be met.

(ii) Except as otherwise provided in paragraph (g) of this section, the repowering extension shall be in effect starting January 1, 2000 and ending on the day before the date (specified in the Acid Rain permit) on which the existing unit will be removed from operation to install the qualifying repowering technology or will be permanently removed from service for replacement by a new unit with such technology; *provided* that the repowering extension shall end no later than December 31, 2003.

(iii) The portion of the operating permit specifying the repowering extension and other requirements under paragraph (f)(2)(i) of this section shall be subject to the Administrator's final determination, under paragraph (d)(4) of this section, that the technology to be used in the repowering extension plan is a qualifying repowering technology.

(3) *Allowance allocation.* The Administrator will allocate allowances after issuance of an operating permit containing the repowering extension plan (or, if the plan is conditionally approved, after the revision of the Acid Rain permit under § 72.40(c)) and of the Administrator's final determination, under paragraph (d)(4) of this section, that the technology to be used in such plan is a qualifying repowering technology. Allowances will be allocated (including a pro rata allocation for any fraction of a year), as follows:

(i) To the existing unit under the approved plan, in accordance with § 73.21 of this chapter during the repowering extension under paragraph (f)(2)(ii) of this section; and

(ii) To the existing unit under the approved plan under paragraph (b)(1) of this section or, in lieu of any further allocations to the existing unit, to the new unit under the approved plan under paragraph (b)(2) of this section, in accordance with § 73.21 of this chapter, after the repowering extension under paragraph (f)(2)(ii) of this section ends.

(g) *Failed repowering projects.* (1)(i) If, at any time before the end of the repowering extension under paragraph (f)(2)(ii) of this section, the designated representative of a unit governed by an approved repowering extension plan notifies the Administrator in writing that the owners and operators have decided to terminate efforts to properly design, construct, and test the repowering technology specified in the plan before completion of construction or start-up testing and demonstrates, in a proposed permit revision, to the Administrator's satisfaction that such efforts were in good faith, the unit shall not be deemed in violation of the Act because of such a termination. Where the preceding requirements of this paragraph are met, the permitting authority shall revise the operating permit in accordance with this paragraph and paragraph (g)(1)(ii) of this section and § 72.81 (permit modification).

(ii) Regardless of whether notification under paragraph (g)(1)(i) of this

section is given, the repowering extension will end beginning on the earlier of the date of such notification or the date by which the designated representative was required to give such notification under § 72.94(d). The Administrator will deduct allowances (including a pro rata deduction for any fraction of a year) from the Allowance Tracking System account of the existing unit to the extent necessary to ensure that, beginning the day after the extension ends, allowances are allocated in accordance with § 73.21(c)(1) of this chapter.

(2) If the designated representative of a unit governed by an approved repowering extension plan demonstrates to the satisfaction of the Administrator, in a proposed permit revision, that the repowering technology specified in the plan was properly constructed and tested on such unit but was unable to achieve the emissions reduction limitations specified in the plan and that it is economically or technologically infeasible to modify the technology to achieve such limits, the unit shall not be deemed in violation of the Act because of such failure to achieve the emissions reduction limitations. In order to be properly constructed and tested, the repowering technology shall be constructed at least to the extent necessary for direct testing of the multiple combustion emissions (including sulfur dioxide and nitrogen oxides) from such unit while operating the technology at nameplate capacity. Where the preceding requirements of this paragraph are met:

(i) The permitting authority shall revise the Acid Rain portion of the operating permit in accordance with paragraphs (g)(2) (ii) and (iii) and § 72.81 (permit modification).

(ii) The existing unit may be retrofitted or repowered with another clean coal or other available control technology.

(iii) The repowering extension will continue in effect until the earlier of the date the existing unit commences commercial operation with such control technology or December 21, 2003. The Administrator will allocate or deduct allowances as necessary to ensure that allowances are allocated in accordance with paragraph (f)(3) of this section applying the repowering extension under this paragraph.

(h) *Special provisions.* (1) *Emissions Limitations.* (i) *Sulfur Dioxide.* Allowances allocated during the repowering extension under paragraphs (f)(3) and (g)(2)(iii) of this section to a unit governed by an approved repowering extension plan shall not be transferred to any Allowance Tracking System account other than the unit accounts of other units at the same source as that unit.

(ii) *Nitrogen oxides.* Any existing unit governed by an approved repowering extension plan shall be subject to the Acid Rain emissions limitations for nitrogen oxides in accordance with section 407 of the Act and regulations implementing section 407 of the Act beginning on the date that the unit is removed from operation to install the repowering technology or is permanently removed from service.

(iii) No existing unit governed by an approved repowering extension plan shall be eligible for a waiver under section 111(j) of the Act.

(iv) No new unit governed by an approved repowering extension plan shall receive an exemption from the requirements imposed under section 111 of the Act.

(2) *Reporting requirements.* Each unit governed by an approved repowering extension plan shall comply with the special reporting requirements of § 72.94.

(3) *Liability.* (i) The owners and operators of a unit governed by an approved repowering plan shall be liable for any violation of the plan or this section at that or any other unit governed by the plan, including liability for fulfilling the obligations specified in part 77 of this chapter and section 411 of the Act.

(ii) The units governed by the plan under paragraph (b)(2) of this section shall continue to have a common designated representative until the existing unit is permanently retired under the plan.

(4) *Terminations.* Except as provided in paragraph (g) of this section, a repowering extension plan shall not be terminated after December 31, 1999.

[58 FR 3650, Jan. 11, 1993, as amended at 58 FR 15649, Mar. 23, 1993]

Subpart E—Acid Rain Permit Contents

§72.50 General.

(a) Each Acid Rain permit (including any draft or proposed Acid Rain permit) will contain the following elements in a format prescribed by the Administrator:

(1) All elements required for a complete Acid Rain permit application under §72.31 of this part, as approved or adjusted by the permitting authority;

(2) The applicable Acid Rain emissions limitation for sulfur dioxide; and

(3) The applicable Acid Rain emissions limitation for nitrogen oxides.

(b) Each Acid Rain permit is deemed to incorporate the definitions of terms under §72.2 of this part.

§72.51 Permit shield.

Each affected unit operated in accordance with the Acid Rain permit that governs the unit and that was issued in compliance with title IV of the Act, as provided in this part and parts 73, 75, 77, and 78 of this chapter, and the regulations implementing section 407 of the Act, shall be deemed to be operating in compliance with the Acid Rain Program, except as provided in §72.9(g)(6) of this part.

Subpart F—Federal Acid Rain Permit Issuance Procedures

§72.60 General.

(a) *Scope.* This subpart contains the procedures for federal issuance of Acid Rain permits for Phase I of the Acid Rain Program and Phase II for sources in States or geographic areas where the Administrator is the permitting authority as provided under regulations implementing title V of the Act. The procedures in this subpart do not apply to the issuance of Acid Rain permits by State permitting authorities with operating permit programs approved under part 70 of this chapter, except as expressly provided in subpart G of this part.

(b) *Permit Decision Deadlines.* The Administrator will issue or deny an Acid Rain permit under §72.69(a) within 6 months of receipt of a complete Acid Rain permit application submitted for a unit, in accordance with §72.21, at the U.S. EPA Regional Office for the Region in which the source is located.

§72.61 Completeness.

(a) *Determination of Completeness.* The Administrator will determine whether the Acid Rain permit application is complete within 30 days of receipt by the U.S. EPA Regional Office for the Region in which the source is located. The permit application shall be deemed to be complete if the Administrator fails to notify the designated representative to the contrary within 30 days of receipt.

(b) *Supplemental Information.* (1) Regardless of whether the Acid Rain permit application is complete under paragraph (a) of this section, the Administrator may require submission of any additional information that the Administrator determines to be necessary in order to review the Acid Rain permit application and issue an Acid Rain permit.

(2)(i) The designated representative shall submit the information required under paragraph (b)(1) of this section within 30 days after he or she is notified of the requirement for supplemental information unless the Administrator allows for additional time to collect and submit the information.

(ii) If the designated representative fails to submit the supplemental information within the required time period, the Administrator may disapprove that portion of the Acid Rain permit application for the review of which the information was necessary and may deny the source an Acid Rain permit.

§72.62 Draft permit.

(a) After the Administrator receives a complete Acid Rain permit application and any supplemental information, the Administrator will issue a draft permit that incorporates in whole, in part, or with changes or conditions as appropriate, the permit application or deny the source a draft permit.

(b) The draft permit will be based on the information submitted by the designated representative of the affected source and other relevant information.

(c) The Administrator will serve a copy of the draft permit and the statement of basis on the designated representative of the affected source.

(d) The Administrator will provide a 30-day period for public comment, and opportunity to request a public hearing, on the draft permit or denial of a draft permit, in accordance with the public notice required under § 72.65(a)(1)(i) of this part.

§ 72.63 Administrative record.

(a) *Contents of the Administrative Record.* The Administrator will prepare an administrative record for an Acid Rain permit or denial of an Acid Rain permit. The administrative record will contain:

(1) The permit application and any supporting or supplemental data submitted by the designated representative;

(2) The draft permit;

(3) The statement of basis;

(4) Copies of any documents cited in the statement of basis and any other documents relied on by the Administrator in issuing or denying the draft permit (including any records of discussions or conferences with owners, operators, or the designated representative of affected units at the source or interested persons regarding the draft permit), or, for any such documents that are readily available, a statement of their location;

(5) Copies of all written public comments submitted on the draft permit or denial of a draft permit;

(6) The record of any public hearing on the draft permit or denial of a draft permit;

(7) The Acid Rain permit; and

(8) Any response to public comments submitted on the draft permit or denial of a draft permit and copies of any documents cited in the response and any other documents relied on by the Administrator to issue or deny the Acid Rain permit, or, for any such documents that are readily available, a statement of their location.

(b) [Reserved]

§ 72.64 Statement of basis.

(a) The statement of basis will briefly set forth significant factual, legal, and policy considerations on which the Administrator relied in issuing or denying the draft permit.

(b) The statement of basis will include:

(1) The reasons, and supporting authority, for approval or disapproval of any compliance options requested in the permit application, including references to applicable statutory or regulatory provisions and to the administrative record; and

(2) The name, address, and telephone, and facsimile numbers of the EPA office processing the issuance or denial of the draft permit.

§ 72.65 Public notice of opportunities for public comment.

(a)(1) The Administrator will give public notice of the following:

(i) The draft permit or denial of a draft permit and the opportunity for public review and comment and to request a public hearing; and

(ii) Date, time, location, and procedures for any scheduled hearing on the draft permit or denial of a draft permit.

(2) Any public notice given under this section may be for the issuance or denial of one or more draft permits.

(b) *Methods.* The Administrator will give the public notice required by this section by:

(1) Serving written notice on the following persons (except where such person has waived his or her right to receive such notice):

(i) The designated representative;

(ii) The State or local air pollution agency and any State or local utility regulatory authority with jurisdiction over the owners of any source or any unit covered by the Acid Rain permit application;

(iii) The State or local air pollution agency for any contiguous State whose air quality may be affected by, or for any State located within a 50-mile radius of, any source covered by the Acid Rain permit application; and

(iv) Any interested person.

(2) Giving notice by publication in the FEDERAL REGISTER and in a newspaper of general circulation in the area where the source covered by the Acid Rain permit application is located or in a State publication designed to give general public notice.

(c) *Contents.* All public notices issued under this section will contain the following information:

(1) Identification of the EPA office processing the issuance or denial of the draft permit for which the notice is being given.

(2) Identification of the designated representative for the affected source.

(3) Identification of each unit covered by the Acid Rain permit application and the draft permit.

(4) Any compliance options proposed for approval in the draft permit or for disapproval and the total allowances (including any under the compliance options) allocated to each unit if the Acid Rain permit application is approved.

(5) The address and office hours of a public location where the administrative record is available for public inspection and a statement that all information submitted by the designated representative and not protected as confidential under section 114(c) of the Act is available for public inspection as part of the administrative record.

(6) For public notice under paragraph (a)(1)(i) of this section, a brief description of the public comment procedures, including:

(i) A 30-day period for public comment beginning the date of publication of the notice or, in the case of an extension or reopening of the public comment period, such period as the Administrator deems appropriate;

(ii) The address where public comments should be sent;

(iii) Required formats and contents for public comment;

(iv) An opportunity to request a public hearing to occur not earlier than 15 days after public notice is given and the location, date, time, and procedures of any scheduled public hearing; and

(v) Any other means by which the public may participate.

(d) *Extensions and Reopenings of the Public Comment Period.* On the Administrator's own motion or on the request of any person, the Administrator may, at his or her discretion, extend or reopen the public comment period where he or she finds that doing so will contribute to the decision-making process by clarifying one or more significant issues affecting the draft permit or denial of a draft permit. Notice of any such extension or reopening shall be given under paragraph (a)(1)(i) of this section.

§72.66 Public comments.

(a) *General.* During the public comment period, any person may submit written comments on the draft permit or the denial of a draft permit.

(b) *Form.* (1) Comments shall be submitted in duplicate.

(2) The submission shall clearly indicate the draft permit issuance or denial to which the comments apply.

(3) The submission shall clearly indicate the name of the person commenting, his or her interest in the matter, and his or her affiliation, if any, to owners and operators of any unit covered by the Acid Rain permit application.

(c) *Contents.* Timely comments on any aspect of the draft permit or denial or a draft permit will be considered unless they concern:

(1) Any standard requirement under §72.9;

(2) Issues that are not relevant, such as:

(i) The environmental effects of acid rain, acid deposition, sulfur dioxide, or nitrogen oxides generally; and

(ii) Permit issuance procedures, or actions on other permit applications, that are not relevant to the draft permit issuance or denial in question.

(d) Persons who do not wish to raise issues concerning the issuance or denial of the draft permit, but who wish to be notified of any subsequent actions concerning such matter may so indicate in writing during the public comment period or at any other time. The Administrator will place their names on a list of interested persons.

§72.67 Opportunity for public hearing.

(a) During the public comment period, any person may request a public hearing. A request for a public hearing shall be made in writing and shall state the issues proposed to be raised in the hearing.

(b) On the Administrator's own motion or on the request of any person, the Administrator may, at his or her

discretion, hold a pubic hearing whenever the Administrator finds that such a hearing will contribute to the decision-making process by clarifying one or more significant issues affecting the draft permit or denial of a draft permit. Public hearings will not be held on issues under § 72.66(c) (1) and (2).

(c) During a public hearing under this section, any person may submit oral or written comments concerning the draft permit or denial of a draft permit. The Administrator may set reasonable limits on the time allowed for oral statements and will require the submission of a written summary of each oral statement.

(d) The Administrator will assure that a record is made of the hearing.

§ 72.68 Response to comments.

(a) The Administrator will consider comments on the draft permit or denial of a draft permit that are received during the public comment period and any public hearing. The Administrator is not required to consider comments otherwise received.

(b) In issuing or denying an Acid Rain permit, the Administrator will:

(1) Identify any permit provision or portion of the statement of basis that has been changed and the reasons for the change; and

(2) Briefly describe and respond to relevant comments under paragraph (a) of this section.

§ 72.69 Issuance and effective date of acid rain permits.

(a) After the close of the public comment period, the Administrator will issue or deny an Acid Rain permit. The Administrator will serve a copy of any Acid Rain permit and the response to comments on the designated representative for the source covered by the issuance or denial and serve written notice of the issuance or denial on any persons who are entitled to written notice under § 72.65(b)(1) (ii), (iii), and (iv) of this part. The Administrator will also give notice in the FEDERAL REGISTER.

(b)(1) The term of every Acid Rain permit shall be 5 years commencing on its effective date.

(2) Every Acid Rain permit for Phase I shall take effect on January 1, 1995.

Subpart G—Acid Rain Phase II Implementation

§ 72.70 Relationship to title V operating permit program.

(a) *Scope.* This subpart sets forth criteria for approval of State operating permit programs and the requirements with which State permitting authorities with approved programs shall comply, and with which the Administrator will comply in the absence of an approved State program, to issue Phase II Acid Rain permits.

(b) *Relationship to Operating Permit Program.* Each State permitting authority with an affected source shall act in accordance with this part and part 70, and part 78 of this chapter for the purpose of incorporating Acid Rain Program requirements into each affected source's operating permit or for issuing written exemptions under §§ 72.7 and 72.8. To the extent that any requirements of this part and part 78 of this chapter are inconsistent with the requirements of part 70 of this chapter, this part and part 78 of this chapter shall take precedence and shall govern the issuance, denial, revision, reopening, renewal, and appeal of the Acid Rain portion of an operating permit. For purposes of applying this subpart, the provisions of this subpart and of part 70 applicable to Acid Rain permit applications and draft, proposed, and final Acid Rain permits shall also apply to petitions for exemption and draft, proposed, and final written exemptions respectively for new or retired units to the extent consistent with §§ 72.7 and 72.8 of this chapter.

§ 72.71 Approval of state programs—general.

(a) Each State shall submit, to the Administrator for approval, a proposed operating permit program meeting the requirements of this subpart and part 70 of this chapter.

(b) The Administrator will act on State submissions of an operating permit program in accordance with the schedule and procedures set forth in § 70.4(e) of this chapter. The Administrator will approve State programs that conform to the applicable requirements of this subpart and § 70.4(b) of this chapter.

(c)(1) After approval of a State operating permit program, the Administrator will suspend, in accordance with this part and part 70 of this chapter, federal issuance of Acid Rain permits for Phase II for sources and units subject to the State program.

(2) The Administrator will issue all Acid Rain permits for Phase I. However, the Administrator reserves the right to delegate the remaining administration of Acid Rain permits for Phase I to approved State operating permit programs.

§72.72 State permit program approval criteria.

A State operating permit program shall meet the following criteria concerning the Acid Rain Program. Any aspect of the State program or any implementation of the State program that is inconsistent with these criteria shall be grounds for disapproval or withdrawal of approval of the State program by the Administrator:

(a) *Non-Interference with Acid Rain Program.* The State operating permit program shall not include or implement any measures that would interfere with the Acid Rain Program. In particular, the State program shall not restrict or interfere with allowance trading and shall not interfere with the Administrator's decision on an offset plan. Aspects and implementation of the State program that would constitute interference with the Acid Rain Program, and are thus prohibited, include but are not limited to:

(1) Prohibitions, inconsistent with the Acid Rain Program, on the acquisition or transfer of allowances by an affected unit under the jurisdiction of the State permitting authority;

(2) Restrictions, inconsistent with the Acid Rain Program, on an affected unit's ability to sell or otherwise obligate its allowances;

(3) Requirements that an affected unit maintain a balance of allowances in excess of the level determined to be prudent by any utility regulatory authority with jurisdiction over the owners of the affected unit;

(4) Failing to notify the Administrator of any State administrative or judicial appeals of, or decisions covering, Acid Rain permit provisions that might affect Acid Rain Program requirements;

(5) Issuing an order, inconsistent with the Acid Rain Program, interpreting Acid Rain Program requirements as not applicable to an affected source or an affected unit in whole or in part or otherwise adjusting the requirements;

(6) Withholding approval of any compliance option that meets the requirements of the Acid Rain Program; or

(7) Any other aspect of implementation that the Administrator determines would hinder the operation of the Acid Rain Program.

(b) The State operating permit program shall require the following:

(1) *Acid Rain Permit Issuance.* Issuance or denial of Acid Rain permits shall follow the procedures under this part, part 70 of this chapter, and, for combustion or process sources, part 74, including:

(i) *Permit application*—(A) *Requirement to comply. (1)* The owners and operators and the designated representative for each affected source, except for combustion or process sources, under jurisdiction of the State permitting authority shall be required to comply with subparts B, C, and D of this part.

(2) The owners and operators and the designated representative for each combustion or process source under jurisdiction of the State permitting authority shall be required to comply with subpart B of this part and subparts B, C, D, and E of part 74 of this chapter.

(B) *Effect of an Acid Rain permit application.* A complete Acid Rain permit application, except for a permit application for a combustion or process source, shall be binding on the owners and operators and the designated representative of the affected source, all affected units at the source, and any other unit governed by the permit application and shall be enforceable as an Acid Rain permit, from the date of submission of the permit application until the issuance or denial of the Acid Rain permit under paragraph (b)(1)(vii) of this section.

(C) *Submission to the Administrator.* The State permitting authority shall submit a written notice of application completeness to the Administrator

within 10 working days following a determination by the State permitting authority that the Acid Rain permit application is complete.

(ii) *Draft permit.* (A) The State permitting authority shall prepare the draft Acid Rain permit in accordance with subpart E of this part or, for a combustion or process source, subpart B of part 74 of this chapter, or deny a draft Acid Rain permit.

(B) The State permitting authority shall prepare a statement of basis in accordance with the requirements for a statement of basis under § 72.64 of this part.

(C) Prior to issuance of a draft permit for a combustion or process source, the State permitting authority shall provide the designated representative of a combustion or process source an opportunity to confirm its intention to opt-in, in accordance with § 74.14 of this chapter.

(iii) *Notice to Administrator.* The State permitting authority shall submit a copy of the draft Acid Rain permit and the statement of basis to the Administrator and all other relevant portions of the operating permit that may affect the draft Acid Rain permit. This submission requirement will not be waived.

(iv) *Public Notice and Comment Period.* Public notice of the issuance or denial of the draft Acid Rain permit and the opportunity to comment and request a public hearing shall be given by publication in a newspaper of general circulation in the area where the source is located or in a State publication designed to give general public notice. A notice shall be served on those persons required to receive notice under §§ 70.7(h) and 70.8(b) of this chapter.

(v) *Proposed Permit.* Following the public notice and comment period on a draft Acid Rain permit, the permitting authority shall incorporate all changes necessary and issue a proposed Acid Rain permit in accordance with subpart E of this part or, for combustion or process sources, in accordance with subpart B of part 74 of this chapter or deny a proposed Acid Rain permit.

(vi) *Submittal to Administrator.* (A) The State permitting authority shall submit the proposed Acid Rain permit or denial of a proposed Acid Rain permit to the Administrator in accordance with § 70.8(a) of this chapter, the provisions of which shall be treated as applying to the issuance or denial of a proposed Acid Rain permit.

(B) The Administrator will review the proposed Acid Rain permit or denial of a proposed Acid Rain permit in accordance with § 70.8(c) of this chapter, the provisions of which shall be treated as applying to the issuance or denial of a proposed Acid Rain permit.

(vii) *Acid Rain Permit Issuance.* Following the Administrator's review of the proposed Acid Rain permit or denial of a proposed Acid Rain permit, the State permitting authority shall or, under § 70.8(c) of this chapter (treated as applying to the issuance or denial of an Acid Rain permit), the Administrator will, incorporate any required changes and issue or deny the Acid Rain permit in accordance with subpart E of this part.

(viii) *Effective Date of Acid Rain Permit.* Each source's Acid Rain permit issued by a State permitting authority under this section shall be effective for a period of 5 years.

(ix) *New Owners.* An Acid Rain permit shall be binding on any new owner or operator or designated representative of any source or unit governed by the permit.

(x) Each Acid Rain permit (including a draft or proposed permit) shall contain all applicable Acid Rain requirements, shall be a complete and segregable portion of the operating permit, and shall not incorporate information contained in any other documents, other than documents that are readily available.

(xi) Invalidation of the Acid Rain portion of an operating permit shall not affect the continuing validity of the rest of the operating permit, nor shall invalidation of any other portion of the operating permit affect the continuing validity of the Acid Rain portion of the permit.

(xii) No Acid Rain permit (including a draft or proposed permit) shall be issued unless the Administrator has received a certificate of representation for the designated representative of the source in accordance with subpart B of this part.

(xiii) Notwithstanding any State law providing that a permit must be issued by default after a specified time, no Acid Rain permit shall be issued until the Administrator and other States have had an opportunity to review a proposed Acid Rain permit as provided in this section and § 70.8(b) of this chapter.

(xiv) Except as provided in § 72.73(b) and, with regard to combustion or process sources, in § 74.14(c)(6) of this chapter, the State permitting authority shall issue or deny an Acid Rain permit within 18 months of receiving a complete Acid Rain permit application submitted in accordance with § 72.21 or such lesser time approved under part 70 of this chapter.

(2) *Permit Revisions.* In acting on any Acid Rain permit revision, the State permitting authority shall follow the provisions and procedures set forth at subpart H of this part.

(3) *Permit Renewal.* The renewal of an Acid Rain permit for an affected source shall be subject to all the requirements of this subpart pertaining to the issuance of permits.

(4) *Acid Rain Program Forms.* In developing the Acid Rain portion of the operating permit, the permitting authority shall use the applicable forms or other formats prescribed by the Administrator under the Acid Rain Program; *provided* that the Administrator may waive this requirement in whole or in part.

(5) *Acid Rain Appeal Procedures.* (i) Appeals of the Acid Rain portion of an operating permit issued by the State permitting authority that do not challenge or involve decisions or actions of the Administrator under this part, parts 73, 74, 75, 76, 77 and 78 of this chapter, shall be conducted according to procedures established by the State under § 70.4(b)(3)(x) of this chapter. Appeals of the Acid Rain portion of such a permit that challenge or involve such decisions or actions of the Administrator shall follow the procedures under part 78 of this chapter and section 307 of the Act. Such decisions or actions include, but are not limited to, allowance allocations, determinations concerning alternative monitoring systems, and determinations of whether a technology is a qualifying repowering technology.

(ii) Under no circumstances shall a State administrative appeal or judicial appeal of the Acid Rain portion of an operating permit be allowed more than 90 days (or such shorter period as provided by the applicable State appeals procedures) following respectively issuance of the Acid Rain portion that is subject to administrative appeal or issuance of the final agency action subject to judicial appeal.

(iii) The State permitting authority shall serve written notice on the Administrator of any State administrative or judicial appeal concerning as Acid Rain provision of any operating permit or denial of an Acid Rain portion of any operating permit within 30 days of the filing of the appeal.

(iv) Any State administrative permit appeals procedures shall ensure that the Administrator may intervene as a matter of right in any permit appeal involving an Acid Rain permit provision or denial of an Acid Rain permit.

(v) The State permitting authority shall serve written notice on the Administrator of any determination or order in a State administrative or judicial proceeding that interprets, modifies, voids, or otherwise relates to any portion of an Acid Rain permit. Following any such determination or order, the Administrator will have an opportunity to review and veto the Acid Rain permit or revoke the permit for cause in accordance with § 70.8 of this chapter.

(vi) A failure of the State permitting authority to issue an Acid Rain permit in accordance with § 72.73(b)(1)(i) or, with regard to combustion or process sources, § 74.14(c)(6) of this chapter shall be ground for filing an appeal.

(vii) No appeal concerning an Acid Rain requirement shall result in a stay of any provision of the Acid Rain permit for which a stay is barred under part 78 of this chapter.

(6) *Cooperation with Utility Regulatory Authority.* In considering any Acid Rain permit application, the State permitting authority shall ensure coordination with any utility regulatory authority with jurisdiction over the owners of the affected unit.

(7) *New Units and Retired Units Exemptions.* The State permitting authority shall act in accordance with §§ 72.7 and 72.8 on any petition for exemption of a new unit or retired unit from requirements of the Acid Rain Program.

(8) *State Permit Evaluation.* The State permitting authority shall periodically evaluate the extent to which its operating permit program meets the Acid Rain Program requirements and supports a cost-effective implementation of the program. The permit fee rates set by the State permitting authority shall be adequate to cover such evaluation.

[58 FR 3650, Jan. 11, 1993, as amended at 60 FR 17113, Apr. 4, 1995]

§ 72.73 State issuance of Phase II permits.

(a) *State Permit Issuance.* (1) A State with an operating permit program that has been approved by the Administrator under this part and part 70 of this chapter on or before July 1, 1996, shall be responsible for issuing Acid Rain permits for Phase II to all affected sources in that State.

(2) A State that has obtained interim operating permit program approval (as defined in § 70.4(d) of this chapter) on or before July 1, 1996 shall be responsible for issuing Acid Rain permits for Phase II to all affected sources in that State.

(3) A State that has obtained partial operating permit program approval (as defined in § 70.4(c) of this chapter) on or before July 1, 1996 shall be responsible for issuing Acid Rain permits for Phase II to all affected sources in the geographic area to which the partial approval applies.

(4) The State permitting authority shall comply with the procedures for issuance, revision, renewal, and appeal of Acid Rain permits under this subpart.

(b) *Permit Issuance Deadline.* (1)(i) On or before December 31, 1997, a State with an approved operating permit program shall issue an Acid Rain permit for Phase II to each affected source in the geographic area for which the program is approved as set forth in paragraph (a) of this section; *provided* that the designated representative of the source submitted a timely and complete Acid Rain permit application in accordance with § 72.21 of this part and meets the requirements of this subpart and part 70 of this chapter.

(ii) Each Acid Rain permit issued in accordance with this section shall have a term of 5 years commencing on its effective date. Each Acid Rain permit issued in accordance with paragraph (b)(1)(i) of this section shall take effect by the later of January 1, 2000, or, where the permit governs a unit under § 72.6(a)(3) of this part, the deadline for monitor certification under part 75 of this chapter.

(2) *Nitrogen Oxides.* Not later than January 1, 1999, the State permitting authority shall reopen the Acid Rain permit to add the Acid Rain Program nitrogen oxides requirements; *provided* that the designated representative of the affected source submitted a timely and complete Acid Rain permit application for nitrogen oxides in accordance with § 72.21. Such reopening shall not affect the term of the Acid Rain portion of an operating permit.

§ 72.74 Federal issuance of Phase II permits.

(a) The Administrator will be responsible for issuing Acid Rain permits for Phase II for any affected sources in a geographic area (including a State) that does not have an operating permit program with full, partial, or interim approval by the Administrator on or before July 1, 1996, under part 70 of this chapter. After approval of a State program, the Administrator will suspend, in accordance with this part and part 70 of this chapter, federal issuance of such permits for sources in the geographic area covered by the State program and the State shall be responsible for issuing such permits in accordance with § 72.73 of this part.

(b) *Permit Issuance Deadline.* (1)(i) On or before January 1, 1998, the Administrator will issue an Acid Rain permit for Phase II governing Acid Rain Program sulfur dioxide requirements to each affected source in a geographic area that, on July 1, 1996, did not have an approved operating permit program under part 70 of this chapter; *provided* that the designated representative for the source submitted a timely and complete Acid Rain permit application in accordance with § 72.21 of this part.

The failure by the Administrator to issue a permit in accordance with this paragraph shall be grounds for the filing of an appeal under part 78 of this chapter.

(ii) Notwithstanding paragraph (b)(1)(i) of this section, the Administrator may delegate to any State that obtains operating permit program approval after July 1, 1996, responsibility for permit review and implementation.

(iii) Each Acid Rain permit issued in accordance with this section shall have a term of 5 years commencing on its effective date. Each Acid Rain permit issued in accordance with paragraph (b)(1) shall take effect by the later of January 1, 2000 or, where a permit governs a unit under §72.6(a)(3) of this part, the deadline for monitor certification under part 75 of this chapter.

(2) *Nitrogen Oxides.* Not later than 6 months following submission by the designated representative of a timely and complete Acid Rain permit application for nitrogen oxides, the Administrator shall reopen the Acid Rain permit for Phase II to add the Acid Rain Program nitrogen oxides requirements. Such reopening shall not affect the term of the Acid Rain permit.

(c) *Permit Issuance.* The Administrator will issue Acid Rain permits for Phase II in accordance with subparts E and F of this part and the regulations implementing title V of the Act.

[58 FR 3650, Jan. 11, 1993; 58 FR 40747, July 30, 1993]

Subpart H—Permit Revisions

§72.80 General.

(a) This subpart shall govern revisions to any Acid Rain permit issued by the Administrator and to the Acid Rain portion of any operating permit issued by a State with an approved operating permit program under part 70 of this chapter.

(b) The provisions of this subpart shall supersede the operating permit revision procedures specified in part 70 of this chapter with regard to revision of any Acid Rain Program permit provision.

(c) A permit revision may be submitted for approval at any time. No permit revision shall affect the term of the Acid Rain permit to be revised. No permit revision shall excuse any violation of an Acid Rain Program requirement that occurred prior to the effective date of the revision.

(d) The terms of the Acid Rain permit shall apply while the permit revision is pending.

(e) Any determination or interpretation by a State (including a State court) modifying or voiding any Acid Rain permit provision shall be subject to review by the Administrator in accordance with §70.8(c) of this chapter as applied to permit modifications, unless the determination or interpretation is an administrative amendment approved in accordance with §72.83 of this part.

(f) The standard requirements of §72.9 of this part shall not be modified or voided by a permit revision.

(g) Any permit revision involving incorporation of a compliance option that was not submitted for approval and comment during the permit issuance process, or involving a change in a compliance option that was previously submitted, shall meet the requirements for applying for such compliance option under subpart D and section 407 of the Act and regulations implementing section 407 of the Act.

(h) For permit revisions not described in §§72.81 and 72.82 of this part, the permitting authority may, in its discretion, determine which of these sections is applicable.

§72.81 Permit modifications.

(a) Permit revisions that shall follow the permit modification procedures are:

(1) Relaxation of an excess emission offset requirement after approval of the offset plan by the Administrator;

(2) Incorporation of a final nitrogen oxides alternative emission limitation following a demonstration period;

(3) Determinations concerning failed repowering projects under §72.44(g)(1)(i) and (2) of this part.

(b) The following permit revisions shall follow, at the option of the designated representative submitting the permit revision, either the permit modification procedures or the fast-track modification procedures under §72.82 of this part:

(1) Consistent with paragraph (a) of this section, incorporation of a compliance option that the designated representative did not submit for approval and comment during the permit issuance process; except that incorporation of a reduced utilization plan that was not submitted during the permit issuance process, that does not designate a compensating unit, and that meets the requirements of § 72.43 of this part, may use the administrative permit amendment procedures under § 72.83 of this part;

(2) Changes in a substitution plan or reduced utilization plan that result in the addition of a new substitution unit or a new compensating unit under the plan;

(3) Addition of a nitrogen oxides averaging plan to a permit;

(4) Changes in a Phase I extension plan, repowering plan, nitrogen oxides averaging plan, or nitrogen oxides compliance deadline extension; and

(5) Changes in a thermal energy plan that result in any addition or subtraction of a replacement unit or any change affecting the number of allowances transferred for the replacement of thermal energy.

(c)(1) Permit modifications shall follow the permit issuance requirements of:

(i) Subparts E, F, and G of this part, where the Administrator is the permitting authority; or

(ii) Subpart G of this part and § 70.7(e)(4)(ii) of this chapter, where the State is the permitting authority.

(2) For purposes of applying paragraph (c)(1) of this section, a permit modification shall be treated as an Acid Rain permit application, to the extent consistent with this subpart.

[58 FR 3650, Jan. 11, 1993, as amended at 60 FR 17114, Apr. 4, 1995]

§ 72.82 Fast-track modifications.

The following procedures shall apply to all fast-track modifications.

(a) The designated representative shall serve a copy of the fast-track modification on the Administrator, the permitting authority, and any person entitled to a written notice under § 72.65(b)(1) (ii), (iii) and (iv) of this part. Within 5 business days of serving such copies, the designated representative shall also give public notice by publication in a newspaper of general circulation in the area where the source is located or in a State publication designed to give general public notice.

(b) The public shall have a period of 30 days, commencing on the date of publication of the notice, to comment on the fast-track modification. Comments shall be submitted in writing to the permitting authority and to the designated representative.

(c) The designated representative shall submit the fast-track modification to the permitting authority on or before commencement of the public comment period.

(d) Within 30 days of the close of the public comment period, the permitting authority shall consider the fast-track modification and the comments received and approve, in whole or in part or with changes or conditions as appropriate, or disapprove the modification. A fast-track modification shall be effective immediately upon issuance, in accordance with § 70.7(a)(1)(v) of this chapter as applied to significant permit modifications.

§ 72.83 Administrative permit amendment.

(a) Acid Rain permit revisions that shall follow the administrative permit amendment procedures are:

(1) Activation of a compliance option conditionally approved by the permitting authority; *provided* that all requirements for activation under subpart D of this part are met;

(2) Changes in the designated representative or alternative designated representative; *provided* that a new certificate of representation is submitted;

(3) Correction of typographical errors;

(4) Changes in names, addresses, or telephone or facsimile numbers;

(5) Changes in the owners or operators; *provided* that a new certificate of representation is submitted within 30 days;

(6)(i) Termination of a compliance option in the permit; provided that all requirements for termination under subpart D of this part are met and this

procedure shall not be used to terminate a repowering plan after December 31, 1999 or a Phase I extension plan;

(ii) For opt-in sources, termination of a compliance option in the permit; provided that all requirements for termination under §74.47 of this chapter are met.

(7) Changes in a substitution or reduced utilization plan that do not result in the addition of a new substitution unit or a new compensating unit under the plan;

(8) Changes in the date, specified in a unit's Acid Rain permit, of commencement of operation of qualifying Phase I technology, *provided* that they are in accordance with §72.42 of this part;

(9) Changes in the date, specified in a new unit's Acid Rain permit, of commencement of operation or the deadline for monitor certification, *provided* that they are in accordance with §72.9 of this part;

(10) The addition of or change in a nitrogen oxides alternative emissions limitation demonstration period, *provided* that the requirements of regulations implementing section 407 of the Act are met; and

(11) Changes in a thermal energy plan that do not result in the addition or subtraction of a replacement unit or any change affecting the number of allowances transferred for the replacement of thermal energy.

(12) Incorporation of changes that the Administrator has determined to be similar to those in paragraphs (a)(1) through (11) of this section.

(b) Administrative amendments shall follow the procedures set forth at §70.7(d)(3) of this chapter. Where the State is the permitting authority, the permitting authority shall submit the revised portion of the permit to the Administrator within 10 working days after the date of final action on the request for an administrative amendment.

[58 FR 3650, Jan. 11, 1993, as amended at 60 FR 17114, Apr. 4, 1995]

§72.84 Automatic permit amendment.

The following permit revisions shall be deemed to amend automatically, and become a part of the affected unit's Acid Rain permit by operation of law without any further review:

(a) Upon recordation by the Administrator under part 73 of this chapter, all allowance allocations to, transfers to, and deductions from an affected unit's Allowance Tracking System account; and

(b) Incorporation of an offset plan that has been approved by the Administrator under part 77 of this chapter.

§72.85 Permit reopenings.

(a) As provided in §70.7(f) of this chapter, the permitting authority shall reopen an Acid Rain permit for cause, including whenever additional requirements become applicable to any affected unit governed by the permit.

(b) In reopening an Acid Rain permit for cause, the permitting authority shall issue a draft permit changing the provisions, or adding the requirements, for which the reopening was necessary. The draft permit shall be subject to the requirements of subparts E, F, and G of this part.

(c) As provided in §§72.73(b)(2) and 72.74(b)(2) of this part, the permitting authority shall reopen an Acid Rain permit to incorporate nitrogen oxides requirements, consistent with section 407 of the Act and regulations implementing section 407 of the Act.

(d) Any reopening of an Acid Rain permit shall not affect the term of the permit.

Subpart I—Compliance Certification

§72.90 Annual compliance certification report.

(a) *Applicability and deadline.* For each calendar year in which a unit is subject to the Acid Rain emissions limitations, the designated representative of the source at which the unit is located shall submit to the Administrator, within 60 days after the end of the calendar year, an annual compliance certification report for the unit.

(b) *Contents of report.* The designated representative shall include in the annual compliance certification report under paragraph (a) of this section the following elements, in a format prescribed by the Administrator, concerning the unit and the calendar year covered by the report:

(1) Identification of the unit;

(2) For all Phase I units, the information in accordance with §§72.91(a) and 72.92(a) of this part;

(3) If the unit is governed by an approved Phase I extension plan, then the information in accordance with §72.93 of this part;

(4) At the designated representative's option, the total number of allowances to be deducted for the year, using the formula in §72.95 of this part, and the serial numbers of the allowances that are to be deducted;

(5) At the designated representative's option, for units that share a common stack and whose emissions of sulfur dioxide are not monitored separately or apportioned in accordance with part 75 of this chapter, the percentage of the total number of allowances under paragraph (b)(4) of this section for all such units that is to be deducted from each unit's compliance subaccount; and

(6) The compliance certification under paragraph (c) of this section.

(c) *Annual compliance certification.* In the annual compliance certification report under paragraph (a) of this section, the designated representative shall certify, based on reasonable inquiry of those persons with primary responsibility for operating the source and the affected units at the source in compliance with the Acid Rain Program, whether each affected unit for which the compliance certification is submitted was operated during the calendar year covered by the report in compliance with the requirements of the Acid Rain Program applicable to the unit, including:

(1) Whether the unit was operated in compliance with the applicable Acid Rain emissions limitations, including whether the unit held allowances, as of the allowance transfer deadline, in its compliance subaccount (after accounting for any allowance deductions under §73.34(c) of this chapter) not less than the unit's total sulfur dioxide emissions during the calendar year covered by the annual report;

(2) Whether the monitoring plan that governs the unit has been maintained to reflect the actual operation and monitoring of the unit and contains all information necessary to attribute monitored emissions to the unit;

(3) Whether all the emissions from the unit, or a group of units (including the unit) using a common stack, were monitored or accounted for through the missing data procedures and reported in the quarterly monitoring reports;

(4) Whether the facts that form the basis for certification of each monitor at the unit or a group of units (including the unit) using a common stack or for using an Acid Rain Program excepted monitoring method or approved alternative monitoring method, if any, has changed; and

(5) If a change is required to be reported under paragraph (c)(4) of this section, specify the nature of the change, the reason for the change, when the change occurred, and how the unit's compliance status was determined subsequent to the change, including what method was used to determine emissions when a change mandated the need for monitor recertification.

§ 72.91 Phase I unit adjusted utilization.

(a) *Annual compliance certification report.* The designated representative for each Phase I unit shall include in the annual compliance certification report the unit's adjusted utilization for the calendar year in Phase I covered by the report, calculated as follows:

Adjusted utilization=baseline−actual utilization−plan reductions+ compensating generation provided to other units

where:

(1) ''Baseline'' is as defined in §72.2 of this part.

(2) ''Actual utilization'' is the actual annual heat input (in mmBtu) of the unit for the calendar year determined in accordance with part 75 of this chapter.

(3) ''Plan reductions'' are the reductions in actual utilization, for the calendar year, below the baseline that are accounted for by an approved reduced utilization plan. The designated representative for the unit shall calculate the ''plan reductions'' (in mmBtu) using the following formula and converting all values in Kwh to mmBtu using the actual annual average heat rate (Btu/Kwh) of the unit (determined

in accordance with part 75 of this chapter) before the employment of any improved unit efficiency measures under an approved plan:

Plan reductions=reduction from energy conservation+reduction from improved unit efficiency improvements+shifts to designated sulfur-free generators+shifts to designated compensating units

where:

(i) ''Reduction from energy conservation'' is a good faith estimate of the expected kilowatt hour savings during the calendar year from all conservation measures under the reduced utilization plan and the corresponding reduction in heat input (in mmBtu) resulting from those savings. The verified amount of such reduction shall be submitted in accordance with paragraph (b) of this section.

(ii) ''Reduction from improved unit efficiency'' is a good faith estimate of the expected improvement in heat rate during the calendar year and the corresponding reduction in heat input (in mmBtu) at the Phase I unit as a result of all improved unit efficiency measures under the reduced utilization plan. The verified amount of such reduction shall be submitted in accordance with paragraph (b) of this section.

(iii) ''Shifts to designated sulfur-free generators'' is the reduction in utilization (in mmBtu), for the calendar year, that is accounted for by all sulfur-free generators designated under the reduced utilization plan in effect for the calendar year. This term equals the sum, for all such generators, of the ''shift to sulfur-free generator.'' ''Shift to sulfur-free generator'' shall equal the amount, to the extent documented under paragraph (a)(6) of this section, calculated for each generator using the following formula:

Shift to sulfur-free generator=actual sulfur-free utilization−[(average 1985–87 sulfur-free annual utilization) (1+percentage change in dispatch system sales)]

where:

(A) ''Actual sulfur-free utilization'' is the actual annual generation (in Kwh) of the designated sulfur-free generator for the calendar year converted to mmBtus.

(B) ''Average 1985–87 sulfur-free utilization'' is the sum of annual generation (in Kwh) for 1985, 1986, and 1987 for the designated sulfur-free generator, divided by three and converted to mmBtus.

(C) ''Percentage change in dispatch system sales'' is calculated as follows:

$$\text{Percentage change in dispatch system sales} = [S_c - (\sum_{y=1985}^{1987} S_y \div 3)] \div [\sum_{y=1985}^{1987} S_y \div 3]$$

where:

S=dispatch system sales (in Kwh)
c=calendar year
y=1985, 1986, or 1987

If the result of the formula for percentage change in dispatch system sales is less than or equal to zero, then percentage change in dispatch system sales shall be treated as zero only for purposes of paragraph (a)(3)(iii) of this section.

(D) If the result of the formula for ''shift to sulfur-free generator'' is less than or equal to zero, then ''shift to sulfur-free generator'' is zero.

(iv) ''Shifts to designated compensating units'' is the reduction in utilization (in mmBtu) for the calendar year that is accounted for by increased generation at compensating units designated under the reduced utilization plan in effect for the calendar year. This term equals the heat rate, under paragraph (a)(3) of this section, of the unit reducing utilization multiplied by the sum, for all such compensating units, of the ''shift to compensating unit'' for each compensating unit. ''Shift to compensating unit'' shall equal the amount of compensating generation (in Kwh), to the extent documented under paragraph (a)(6) of this section, that the designated representatives of the unit reducing utilization

and the compensating unit have certified (in their respective annual compliance certification reports) as the amount that will be converted to mmBtus and used, in accordance with paragraph (a)(4) of this section, in calculating the adjusted utilization for the compensating unit.

(4) ''Compensating generation provided to other units'' is the total amount of utilization (in mmBtu) necessary to provide the generation (if any) that was shifted to the unit as a designated compensating unit under any other reduced utilization plans that were in effect for the unit and for the calendar year. This term equals the heat rate, under paragraph (a)(3) of this section, of such unit multiplied by the sum of each ''shift to compensating unit'' that is attributed to the unit in the annual compliance certification reports submitted by the Phase I units under such other plans and that is certified under paragraph (a)(3)(iv) of this section.

(5) Notwithstanding paragraphs (a)(3)(i), (ii), and (iii) of this section, where two or more Phase I units include in ''plan reductions'', in their annual compliance certification reports for the calendar year, expected kilowatt hour savings or reduction in heat rate from the same specific conservation or improved unit efficiency measures or increased utilization of the same sulfur-free generator:

(i) The designated representatives of all such units shall submit with their annual reports a certification signed by all such designated representatives. The certification shall apportion the total kilowatt hour savings, reduction in heat rate, or increased utilization among such units.

(ii) Each designated representative shall include in the annual report only the respective unit's share of the total kilowatt hour savings, reduction in heat rate, or increased utilization, in accordance with the certification under paragraph (a)(5)(i) of this section.

(6)(i) Where a unit includes in ''plan reductions'' under paragraph (a)(3) of this section the increase in utilization of any sulfur-free generator, the designated representative of the unit shall submit, with the annual compliance certification report, documentation demonstrating that an amount of electrical energy at least equal to the ''shift to sulfur-free generator'' attributed to the sulfur-free generator in the annual report was actually acquired by the unit's dispatch system from the sulfur-free generator.

(ii) Where a unit includes in ''plan reductions'' under paragraph (a)(3) of this section utilization of any compensating unit, the designated representative of the unit shall submit with the annual compliance certification report, documentation demonstrating that an amount of electrical energy at least equal to the ''shift to compensating unit'' attributed to the compensating unit in the annual report was actually acquired by the unit's dispatch system from the compensating unit.

(7) Notwithstanding paragraphs (a)(3)(i), (ii), (iii), and (iv), (a)(4), and (a)(5) of this section, ''plan reductions'' minus ''compensating generation provided to other units'' shall not exceed ''baseline'' minus ''actual utilization.''

(b) *Confirmation report.* (1) If a unit's annual compliance certification report estimates any expected kilowatt hour savings or improvement in heat rate from energy conservation or improved unit efficiency measures under a reduced utilization plan, the designated representative shall submit, by July 1 of the year in which the annual report was submitted, a confirmation report. The Administrator may grant, for good cause shown, an extension of the time to file the confirmation report. The confirmation report shall include the following elements in a format prescribed by the Administrator:

(i) The verified kilowatt hour savings from each such energy conservation measure and the verified corresponding reduction in the unit's heat input resulting from each measure during the calendar year covered by the annual report. For purposes of this paragraph (b), all values in Kwh shall be converted to mmBtu using the actual annual heat rate (Btu/Kwh) of the unit (determined in accordance with part 75 of this chapter) before the employment of any improved unit measures under an approved reduced utilization plan.

(ii) The verified reduction in the heat rate achieved by each improved unit efficiency measure and the verified corresponding reduction in the unit's heat input resulting from such measure.

(iii) For all figures under paragraphs (b)(1) (i) and (ii) of this section:

(A) Documentation (which may follow the EPA Conservation Verification Protocol) verifying specified figures to the satisfaction of the Administrator; or

(B) Certification, by a State utility regulatory authority that has ratemaking jurisdiction over the utility system that paid for the measures in accordance with § 72.43(b)(2) of this part and over rates reflecting any of the amount paid for such measures and that meets the criteria in § 73.82(c)(1) (i) and (ii) of this chapter, that such authority verified specified figures related to demand-side measures; and

(C) Certification, by a utility regulatory authority that has ratemaking jurisdiction over the utility system that paid for the measures in accordance with § 72.43(b)(2) of this part and over rates reflecting any of the amount paid for such measures, that such authority verified specified figures related to supply-side measures.

(2) Notwithstanding paragraph (b)(1)(i) of this section, where two or more Phase I units include in the confirmation report the verified kilowatt hour savings or reduction in heat rate from the same specific conservation or improved unit efficiency measures:

(i) The designated representatives of all such units shall submit with their confirmation reports a certification signed by all such designated representatives. The certification shall apportion the total kilowatt hour savings or reduction in heat rate among such units.

(ii) Each designated representative shall include in the confirmation report only the respective unit's share of the total savings or reduction in heat rate in accordance with the certification under paragraph (b)(2)(i) of this section.

(3) If the total, included in the confirmation report, of the amounts of verified reduction in the unit's heat input from energy conservation and unit efficiency measures equals the total estimated in the unit's annual compliance certification report from such measures for the calendar year, then the designated representatives shall include in the confirmation report a statement indicating that is true.

(4) If the total, included in the confirmation report, of the amounts of verified reduction in the units's heat input from energy conservation and improved unit efficiency measures is greater than the total estimated in the unit's annual compliance certification report from such measures for the calendar year, then the designated representative shall include in the confirmation report the number of allowances to be credited to the unit's compliance subaccount calculated using the following formula:

Allowances credited=(verified heat input reduction-estimated hear input reduction) × emissions rate • 2000 lbs/ton

where:

(i) ''Verified heat input reduction'' is the total of the amounts of verified reduction in the units' heat input (in mmBtu) from energy conservation and improved unit efficiency measures included in the confirmation report.

(ii) ''Estimated heat input reduction'' is the total of the amounts of reduction in the unit's heat input (in mmBtu) accounted for by energy conservation and improved efficiency measures as estimated in the unit's annual compliance certification report for the calendar year.

(iii) ''Emissions rate'' is the ''emissions rate'' under § 72.92(c)(2)(v) of this part.

(5) If the total, included in the confirmation report, of the amounts of verified reduction in the unit's heat input from energy conservation and improved unit efficiency measures is less than the total estimated in the unit's annual compliance certification report for such measures for the calendar year, then the designated representative shall include in the confirmation report the number of allowances to be deducted from the unit's compliance subaccount, which equals the absolute value of the result of the formula for allowances credited under paragraph (b)(4) of this section.

(6) Unless paragraph (b)(3) of this section applies, the designated representative shall include in the confirmation report the adjusted amount of allowances that would have held in the unit's compliance subaccount if the deductions made under § 73.35(b) of this chapter had been based on the verified, rather than the estimated, reduction in the unit's heat input from energy conservation and improved efficiency measures, calculated as follows:

Adjusted amount of allowances=allowances held after deduction−excess emissions + allowances credited−allowances deducted

where:

(i) ''*Allowances held after deductions*'' is the amount of allowances held in the unit's compliance subaccount after deductions were made under § 73.35(b) of this chapter based on the annual compliance certification report.

(ii) ''*Excess emission*'' is the amount (if any) of excess emissions determined under § 73.35(b) for the calendar year based on the annual compliance certification report.

(iii) ''*Allowances credited*'' is the amount of allowances calculated under paragraph (b)(4) of this section.

(iv) ''*Allowances deducted*'' is the amount of allowances calculated under paragraph (b)(5) of this section.

(v) If the result of the formula for ''adjusted amount of allowances'' is negative, the absolute value of the result constitutes excess emissions of sulfur dioxide. If the result is positive, there are no excess emissions of sulfur dioxide.

(7) If the amount of excess emissions of sulfur dioxide calculated under paragraph (b)(6) of this section differs from the amount of excess emissions of sulfur dioxide determined under § 73.35(b) of this chapter based on the annual compliance certification report, then the designated representative shall include in the confirmation report a demonstration of: The number of allowances that should be deducted to offset any increase in excess emissions or returned to account for any decrease in excess emissions; and the amount of the excess emissions penalty (excluding interest) that should be paid or returned to account for the change in excess emissions. The Administrator will deduct immediately from the unit's compliance subaccount the amount of allowances that he or she determines is necessary to offset any increase in excess emissions or will return immediately to the unit's compliance subaccount the amount of allowances that he or she determines is necessary to account for any decrease in excess emissions. The designated representative may identify the serial numbers of the allowances to be deducted or returned. In the absence of such identification, the deduction will be on a first-in, first-out basis under § 73.35(c)(2) of this chapter and the return will be at the Administrator's discretion.

(8) If the designated representative of a unit fails to submit on a timely basis a confirmation report (in accordance with paragraph (b) of this section) with regard to the estimate of expected kilowatt hour savings or improvement in heat rate from any energy conservation or improved unit efficiency measure under the reduced utilization plan, then the Administrator will reject such estimate and correct it to equal zero in the unit's annual compliance certification report that includes that estimate. The Administrator will deduct immediately, on a first-in, first-out basis under § 73.35(c)(2) of this chapter, the amount of allowances that he or she determines is necessary to offset any increase in excess emissions of sulfur dioxide that results from the correction and require the owners and operators to pay an excess emission penalty in accordance with part 77 of this chapter.

[58 FR 3650, Jan. 11, 1993, as amended at 58 FR 40747, July 30, 1993; 59 FR 60231, Nov. 22, 1994; 60 FR 18470, Apr. 11, 1995]

§ 72.92 Phase I unit allowance surrender.

(a) *Annual compliance certification report.* If a Phase I unit's adjusted utilization for the calendar year in Phase I under § 72.91(a) is greater than zero, then the designated representative shall include in the annual compliance certification report the number of allowances that shall be surrendered for adjusted utilization using the formula in paragraph (c) of this section and the calculations that were performed to obtain that number.

(b) *Other submissions.*

(1) [Reserved]

(2)(i) If any Phase I unit in a dispatch system is governed during the calendar year by an approved reduced utilization plan relying on sulfur-free generation, then the designated representatives of all affected units in such dispatch system shall jointly submit, within 60 days of the end of the calendar year, a dispatch system data report that includes the following elements in a format prescribed by the Administrator:

(A) The name of the dispatch system as reported under § 72.33;

(B) The calculation of ''percentage change in dispatch system sales'' under § 72.91(a)(3)(iii)(C);

(C) A certification that each designated representative will use this figure, as appropriate, in its annual compliance certification report and will submit upon request the data supporting the calculation; and

(D) The signatures of all the designated representatives.

(ii) If any Phase I unit in a dispatch system has adjusted utilization greater than zero for the calendar year, then the designated representatives of all Phase I units in such dispatch system shall jointly submit, within 60 days of the end of the calendar year, a dispatch system data report that includes the following elements in a format prescribed by the Administrator:

(A) The name of the dispatch system as reported under § 72.33;

(B) The calculation of ''percentage change in dispatch system sales'' under § 72.91(a)(3)(iii)(C);

(C) The calculation of ''dispatch system adjusted utilization'' under paragraph (c)(2)(i) of this section;

(D) The calculation of ''dispatch system aggregate baseline'' under paragraph (c)(2)(ii) of this section;

(E) The calculation of ''fraction of generation within dispatch system'' under paragraph (c)(2)(v)(A) of this section;

(F) The calculation of ''dispatch system emissions rate'' under paragraph (c)(2)(v)(B) of this section;

(G) The calculation of ''fraction of generation from non-utility generators'' under paragraph (c)(2)(v)(C) of this section;

(H) The calculation of ''non-utility generator average emissions rate '' under paragraph (c)(2)(v)(F) of this section;

(I) A certification that each designated representative will use these figures, as appropriate, in its annual compliance certification report and will submit upon request the data supporting these calculations; and

(J) The signatures of all the designated representatives.

(c) *Allowance surrender formula.* (1) As provided under the allowance surrender formula in paragraph (c)(2) of this section:

(i) Allowances are not surrendered for deduction for the portion of adjusted utilization accounted for by:

(A) Shifts in generation from the unit to other Phase I units;

(B) A dispatch-system-wide sales decline;

(C) Plan reductions under a reduced utilization plan as calculated under § 72.91; and

(D) Foreign generation.

(ii) Allowances are surrendered for deduction for the portion of adjusted utilization that is not accounted for under paragraph (c)(1)(i) of this section.

(2) The designated representative shall surrender for deduction the number of allowances calculated using the following formula:

Allowances surrendered = [dispatch system adjusted utilization + (dispatch system aggregate baseline × percentage change in dispatch system sales)] × unit's share × emissions rate • 2000 lbs/ton.

If the result of the formula for ''allowances surrendered'' is less than or equal to zero, then no allowances are surrendered.

(i) *Calculating dispatch system adjusted utilization.* ''Dispatch system adjusted utilization'' (in mmBtu) is the sum of the adjusted utilization under § 72.91(a) for all Phase I units in the dispatch system. If ''dispatch system adjusted utilization'' is less than or equal to zero, then no allowances are surrendered by any unit in that dispatch system.

(ii) *Calculating dispatch system aggregate baseline.* ''Dispatch system aggregate baseline'' is the sum of the baselines (as defined in § 72.2 of this chapter) for all Phase I units in the dispatch system.

(iii) *Calculating percentage change in dispatch system sales.* ''Percentage change in dispatch system sales'' is the ''percentage change in dispatch system sales'' under § 72.91 (a)(3)(iii)(C); *provided* that if result of the formula in § 72.91(a)(3)(iii)(C) is greater than or equal to zero, the value shall be treated as zero only for purposes of paragraph (c)(2) of this section.

(iv) *Calculating unit's share.* ''Unit's share'' is the unit's adjusted utilization divided by the sum of the adjusted utilization for all Phase I units within the dispatch system that have adjusted utilization of greater than zero and is calculated as follows:

$$\textit{Unit's share} = \frac{U_{unit}}{\sum_{i=1}^{m} U_i}$$

where:

(A) U_{unit} = the unit's adjusted utilization for the calendar year;

(B) U_i = the adjusted utilization of a Phase I unit in the dispatch system for the calendar year; and

(C) m = all Phase I units in the dispatch system having an adjusted utilization greater than 0 for the calendar year.

(v) *Calculating emissions rate.* ''Emissions rate'' (in lbs/mmBtu) is the weighted average emissions rate for sulfur dioxide of all units and generators, within and outside the dispatch system, that contributed to the dispatch system's electrical output for the year, calculated as follows:

Emissions rate = [fraction of generation within dispatch system × dispatch system emissions rate] + [fraction of generation from non-utility generators × non-utility generator average emissions rate] + [fraction of generation outside dispatch system × fraction of non-Phase 1 and non-foreign generation in NERC region × NERC region emissions rate]

Where:

(A) ''Fraction of generation within dispatch system'' is the fraction of the dispatch system's total sales accounted for by generation from units and generators within the dispatch system, other than generation from non-utility generators. This term equals the total generation (in Kwh) by all units and generators within the dispatch system for the calendar year minus the total non-utility generation from non-utility generators within the dispatch system for the calendar year and divided by the total sales (in Kwh) by the dispatch system for the calendar year.

(B) Dispatch system emissions rate'' is the weighted average rate (in lbs/mmBtu) for the dispatch system calculated as follows:

Dispatch system emissions rate =

$$\sum_{i=1}^{k} g_i \, r_i \div \sum_{i=1}^{k} g_i$$

Where:

g_i = the difference between a Phase II unit's actual utilization for the calendar year and that Phase II unit's baseline. If that difference is less than or equal to zero, then the difference shall be treated as zero only for purposes of paragraph (c)(2)(v) of this section and that unit will be excluded from the calculation of dispatch system emissions rate. Notwithstanding the prior sentence, if the actual utilization of each Phase II unit for the year is equal to or less than the baseline, then g_i shall equal a Phase II unit's actual utilization for the year. Notwithstanding any provision in this paragraph (c)(2)(v)(B) to the contrary, if the actual utilization of each Phase II unit in the dispatch system is zero or there are no Phase II units in the dispatch system, then the dispatch system emissions rate shall equal the fraction of non-Phase I and non-foreign generation in the NERC region multiplied by the NERC region emissions rate.

r_i = a Phase II unit's emissions rate (in lbs/mmBtu), determined in accordance with part 75 of this chapter, for the calendar year.

k = number of Phase II units in the dispatch system.

(C) ''Fraction of generation from non-utility generators'' is the fraction of the dispatch system's total sales accounted for by generation acquired from non-utility generators within or outside the dispatch system. This term equals the total non-utility generation from non-utility generators (within or outside the dispatch system) for the calendar year divided by the total sales (in Kwh) by the dispatch system for the calendar year.

(D) ''Non-utility generator'' is a power production facility (within or outside the dispatch system) that is not an affected unit or a sulfur-free generator and that has a ''non-utility generator emissions rate'' for the calendar year under paragraph (c)(2)(v)(F) of this section.

(E) ''Non-utility generation'' is the generation (in Kwh) that the dispatch system acquired from a non-utility generator during the calendar year as required by federal or State law or an order of a utility regulatory authority or under a contract awarded as the result of a power purchase solicitation required by federal or State law or an order of a utility regulatory authority.

(F) ''Non-utility generator average emissions rate'' is the weighted average rate (in lbs/mmBtu) for the non-utility generators calculated as follows:

Non-utility generator average emissions rate =

$$\sum_{i=1}^{n} N_i R_i \div \sum_{i=1}^{n} N_i$$

Where:

N_i = non-utility generation from a non-utility generator;

R_i = non-utility generator emissions rate for the calendar year for a non-utility generator, which shall equal the most stringent federally enforceable or State enforceable SO_2 emissions limitation applicable for the calendar year to such power production facility, as determined in accordance with paragraphs (c)(2)(v)(F) (*1*), (*2*), and (*3*) of this section; and

n = number of non-utility generators from which the dispatch system acquired non-utility generation. If n equals zero, then the non-utility generator average emissions rate shall be treated as zero only for purposes of paragraph (c)(2)(v) of this section.

(*1*) For purposes of determining the most stringent emissions limitation, applicable emissions limitations shall be converted to lbs/mmBtu in accordance with appendix B of this part. If an applicable emissions limitation cannot be converted to a unit-specific limitation in lbs/mmBtu under appendix B of this part, then the limitation shall not be used in determining the most stringent emissions limitation. Where the power production facility is subject to different emissions limitations depending on the type of fuel it uses during the calendar year, the most stringent emissions limitation shall be determined separately with regard to each type of fuel and the resulting limitation with the highest amount of lbs/mmBtu shall be treated as the facility's most stringent federally enforceable or State enforceable emissions limitation.

(*2*) If there is no applicable emissions limitation that can be used in determining the most stringent emissions limitation under paragraph (c)(2)(v)(F)(*1*) of this section, then the power production facility has no non-utility generator emissions rate for

purposes of paragraphs (c)(2)(v) (D) and (F) of this section and the generation from the facility shall be treated, for purposes of this paragraph (c)(2)(v) as generation from units and generators within the dispatch system if the facility is within the dispatch system or as generation from units and generators outside the dispatch system if the facility is outside the dispatch system.

(*3*) Notwithstanding paragraphs (c)(2)(v)(F) (*1*) and (*2*) of this section, if the power production facility is authorized under federal or State law to use only natural gas as fuel, then the most stringent emissions limitation for the facility for the calendar year shall be deemed to be 0.0006 lbs/mmBtu.

(G) ''Fraction of generation outside dispatch system'' = 1−fraction of generation within dispatch system−fraction of generation from non-utility generators.

(H) ''Fraction of non-Phase I and non-foreign generation in NERC region'' is the portion of the NERC region's total sales generated by units and generators other than Phase I units or foreign sources in the unit's NERC region in 1985, as set forth in Table 1 of this section.

(I) ''NERC region emissions rate'' is the weighted average emission rate (in lbs/mmBtu) for the unit's NERC region in 1985, as set forth in Table 1 of this section.

TABLE 1—NERC REGION GENERATION AND EMISSIONS RATE IN 1985

NERC region	Fraction of non-phase I and non-foreign generation in NERC region	NERC weighted average emissions rate (lbs/mmBtu)
WSCC	0.847	0.466
SPP	0.948	0.647
SERC	0.749	1.315
NPCC	0.423	1.058
MAPP	0.725	1.171
MAIN	0.682	1.495
MAAC	0.750	1.599
ERCOT	1.000	0.491
ECAR	0.549	1.564

[58 FR 3650, Jan. 11, 1993, as amended at 58 FR 40747, July 30, 1993; 60 FR 18470, Apr. 11, 1995]

§ 72.93 Units with Phase I extension plans.

Annual compliance certification report. The designated representative for a control unit governed by a Phase I extension plan shall include in the unit's annual compliance certification report for calendar year 1997, the start-up test results upon which the vendor is released from liability under the vendor certification of guaranteed sulfur dioxide removal efficiency under § 72.42(c)(12).

§ 72.94 Units with repowering extension plans.

(a) *Design and engineering and contract requirements.* No later than January 1, 2000, the designated representative of a unit governed by an approved repowering plan shall submit to the Administrator and the permitting authority:

(1) Satisfactory documentation of a preliminary design and engineering effort.

(2) A binding letter agreement for the executed and binding contract (or for each in a series of executed and binding contracts) for the majority of the equipment to repower the unit using the technology conditionally approved by the Administrator under § 72.44(d)(3).

(3) The letter agreement under paragraph (a)(2) of this section shall be signed and dated by each party and specify:

(i) The parties to the contract;

(ii) The date each party executed the contract;

(iii) The unit to which the contract applies;

(iv) A brief list identifying each provision of the contract;

(v) Any dates to which the parties agree, including construction completion date;

(vi) The total dollar amount of the contract; and

(vii) A statement that a copy of the contract is on site at the source and will be submitted upon written request of the Administrator or the permitting authority.

(b) *Removal from operation to repower.* The designated representative of a unit governed by an approved repowering plan shall notify the Administrator in writing at least 60 days in advance of

the date on which the existing unit is to be removed from operation so that the qualified repowering technology can be installed, or is to be replaced by another unit with the qualified repowering technology, in accordance with the plan.

(c) *Commencement of operation.* Not later than 60 days after the unit repowered under an approved repowering plan commences operation at full load, the designated representative of the unit shall submit a report comparing the actual hourly emissions and percent removal of each pollutant controlled at the unit to the actual hourly emissions and percent removal at the existing unit under the plan prior to repowering, determined in accordance with part 75 of this chapter.

(d) *Decision to terminate.* If at any time before the end of the repowering extension the owners and operators decide to terminate good faith efforts to design, construct, and test the qualified repowering technology on the unit to be repowered under an approved repowering plan, then the designated representative shall submit a notice to the Administrator by the earlier of the end of the repowering extension or a date within 30 days of such decision, stating the date on which the decision was made.

§72.95 Allowance deduction formula.

The following formula shall be used to determine the total number of allowances to be deducted for the calendar year from the allowances held in an affected unit's compliance subaccount as of the allowance transfer deadline applicable to that year:

Total allowances deducted=Tons emitted + Allowances surrendered for underutilization+Allowances deducted for Phase I extensions

where:

(a) ''Tons emitted'' is the total tons of sulfur dioxide emitted by the unit during the calendar year, as reported in accordance with part 75 of this chapter.

(b) ''Allowances surrendered for underutilization'' is the total number of allowances calculated in accordance with §72.92 (a) and (c).

(c) ''Allowances deducted for Phase I extensions'' is the total number of allowances calculated in accordance with §72.42(f)(1)(i).

§72.96 Administrator's action on compliance certifications.

(a) The Administrator may review, and conduct independent audits concerning, any compliance certification and any other submission under the Acid Rain Program and make appropriate adjustments of the information in the compliance certifications and other submissions.

(b) The Administrator may deduct allowances from or return allowances to a unit's Allowance Tracking System account in accordance with part 73 of this chapter based on the information in the compliance certifications and other submissions, as adjusted.

APPENDIX A TO PART 72—METHODOLOGY FOR ANNUALIZATION OF EMISSIONS LIMITS

For the purposes of the Acid Rain Program, 1985 emissions limits must be expressed in pounds of SO_2 per million British Thermal Unit of heat input (lb/mmBtu) and expressed on an annual basis.

Annualization factors are used to develop annual equivalent SO_2 limits as required by section 402(18) of the CAA. Many emission limits are enforced on a shorter term basis (or averaging period) than annually. Because of the variability of sulfur in coal and, in some cases, scrubber performance, meeting a particular limit with an averaging period of less than a year and at a specified statutory emissions level would require a lower annual average SO_2 emission rate (or annual equivalent SO_2 limit) than would the shorter term statutory limit. EPA has selected a compliance level of one exceedance per 10 years. For example, an SO_2 emission limit of 1.2 lbs/MMBtu, enforced for a scrubbed unit over a 7-day averaging period, would result in an annualized SO_2 emission limit of 1.16 lbs/MMBtu. In general, the shorter the averaging period, the lower the annual equivalent would be. Thus, the annualization of limits is established by multiplying each federally enforceable limit by an annualization factor that is determined by the averaging period and whether or not it's a scrubbed unit.

TABLE A–1.—SO_2 EMISSION AVERAGING PERIODS AND ANNUALIZATION FACTORS

Definition	Annualization factor	
	Scrubbed Unscrubbed	
	Unit	Unit
Oil/gas unit	1.00	1.00
<=1 day	0.93	0.89
1 week	0.97	0.92
30 days	1.00	0.96
90 days	1.00	1.00
1 year	1.00	1.00
Not specified	0.93	0.89
At all times	0.93	0.89
Coal unit: No Federal limit or limit unknown	1.00	1.00

APPENDIX B TO PART 72—METHODOLOGY FOR CONVERSION OF EMISSIONS LIMITS

For the purposes of the Acid Rain Program, all emissions limits must be expressed in pounds of SO_2 per million British Thermal Unit of heat input (lb/mmBtu).

The factor for converting pounds of sulfur to pounds of SO_2 is based on the molecular weights of sulfur (32) and SO_2 (64). Limits expressed as percentage of sulfur or parts per million (ppm) depend on the energy content of the fuel and thus may vary, depending on several factors such as fuel heat content and atmospheric conditions. Generic conversions for these limits are based on the assumed average energy contents listed in Table A–2. In addition, limits in ppm vary with boiler operation (e.g., load and excess air); generic conversions for these limits assume, conservatively, very low excess air. The remaining factors are based on site-specific heat rates and capacities to develop conversions for Btu per hour. Standard conversion factors for residual oil are 42 gal/bbl and 7.88 lbs/gal.

TABLE B–1.—CONVERSION FACTORS

[Emission limits converted to lbs SO_2/MMBtu by multiplying as below]

Unit measurement	Plant fuel type			
	Bituminous coal	Subbituminous coal	Lignite coal	Oil
Lbs sulfur/ MMBtu	2.0	2.0	2.0	2.0
% sulfur in fuel	1.66	2.22	2.86	1.07
Ppm SO_2	0.00287	0.00384	.....	0.00167
Ppm sulfur in fuel	.....	.....	.....	0.00334
Tons SO_2/hour	2,000,000/(HEATRATE*SUMNDCAP*capacity factor) [1]			
Lbs SO_2/hour	1,000/(HEATRATE*SUMNDCAP*capacity factor) [1]			

[1] In these cases, if the limit was specified as the ''site'' limit, the summer net dependable capability for the entire plant is used; otherwise, the summer net dependable capability for the unit is used. For units listed in the NADB, ''HEATRATE'' shall be that listed in the NADB under that field and ''SUMNDCAP'' shall be that listed in the NADB under that field. For units not listed in the NADB, ''HEATRATE'' is the generator net full load heat rate reported on Form EIA–860 and ''SUMNDCAP'' is the summer net dependable capability of the generator (in MWe) as reported on Form EIA–860.

TABLE B–2.—ASSUMED AVERAGE ENERGY CONTENTS

Fuel type	Average heat content
Bituminous Coal	24 MMBtu/ton.
Subbituminous Coal	18 MMBtu/ton.
Lignite Coal	14 MMBtu/ton.
Residual Oil	6.2 MMBtu/bbl.

APPENDIX C TO PART 72—ACTUAL 1985 YEARLY SO_2 EMISSIONS CALCULATION

The equation used to calculate the yearly SO_2 emissions (SO2) is as follows:

SO2 = (coal SO_2 emissions) + (oil SO_2 emissions) (in tons)

If gas is the only fuel, gas emissions are defaulted to 0.

Each fuel type SO_2 emissions is calculated on a yearly basis, using the equation:

fuel SO_2 emissions (in tons) = (yrly wtd. av. fuel sulfur %) × (AP–42 fact.) × (1−scrb. effic. %/100) × (units conver. fact.) × (yearly fuel burned)

For coal, the yearly fuel burned is in tons/yr and the AP–42 factor (which accounts for the ash retention of sulfur in coal), in lbs SO_2 ton coal, is by coal type:

Coal type	AP–42 factor
Bituminous, anthracite	39 lbs/ton
Subbituminous	35
Lignite	30

For oil, the yearly fuel burned is in gal/yr. If it is in bbl/yr, convert using 42 gal/bbl oil. The AP–42 factor (which accounts for the oil density), in lbs SO_2/thousand gal oil, is by oil type:

Oil type	AP–42 factor
Distillate (light)	142 lbs/1,000 gal
Residual (heavy)	157

For all fuel, the units conversion factor is 1 ton/2000 lbs.

APPENDIX D TO PART 72—CALCULATION OF POTENTIAL ELECTRIC OUTPUT CAPACITY

The potential electrical output capacity is calculated from the maximum design heat input from the boiler by the following equation:

$$\frac{\text{max. design heat input}}{3} \times \frac{\times 1\ \text{kw-hr}}{3413\ \text{Btu}} \times \frac{\times 1\ \text{MWe}}{1000\ \text{Kw}}$$

For example:

(1) Assume a boiler with a maximum design heat input capacity of 340 million Btu/hr.

(2) One-third of the maximum design heat input capacity is 113.3 mmBtu/hr. The one-third factor relates to the thermodynamic efficiency of the boiler.

(3) To express this in MWe, the standards conversion of 3413 Btu to 1 kw-hr is used: 113.3×10^6 Btu/hr×1 kw-hr / 3413 Btu×1 MWe / 1000 kw=33.2 MWe

[58 FR 15649, Mar. 23, 1993]

PART 73—SULFUR DIOXIDE ALLOWANCE SYSTEM

Subpart A—Background and Summary

Sec.
73.1 Purpose and scope.
73.2 Applicability.
73.3 General.

Subpart B—Allowance Allocations

73.10 Initial allocations for phase I and II.
73.11 Revision of allocations.
73.12 Rounding procedures.
73.13 Procedures for submittals.
73.14—73.15 [Reserved]
73.16 Phase I early reduction credits.
73.17 [Reserved]
73.18 Submittal procedures for units commencing commercial operation during the period from January 1, 1993, through December 31, 1995.
73.19 Certain units with declining SO_2 rates.
73.20 Phase II early reduction credits.
73.21 Phase II repowering allowances.
73.22—73.24 [Reserved]
73.25 Phase I extension reserve.
73.26 Conservation and renewable energy reserve.
73.27 Special allowance reserve.

Subpart C—Allowance Tracking System

73.30 Allowance tracking system accounts.
73.31 Establishment of accounts.
73.32 Allowance account contents.
73.33 Authorized account representative.
73.34 Recordation in accounts.
73.35 Compliance.
73.36 Banking.
73.37 Account error and dispute resolution.
73.38 Closing of accounts.

Subpart D—Allowance Transfers

73.50 Scope and submission of transfers.
73.51 Prohibition.
73.52 EPA recordation.
73.53 Notification.

Subpart E—Auctions, Direct Sales, and Independent Power Producers Written Guarantee

73.70 Auctions.
73.71 Bidding.
73.72 Direct sales.
73.73 Delegation of auctions and sales and termination of auctions and sales.
73.74 Independent power producers written guarantee.
73.75 Application for an IPP written guarantee.
73.76 Approval and exercise of the IPP written guarantee.
73.77 Relationship of the independent power producers written guarantee to the direct sale subaccount.

Subpart F—Energy Conservation and Renewable Energy Reserve

73.80 Operation of allowance reserve program for conservation and renewable energy.
73.81 Qualified conservation measures and renewable energy generation.
73.82 Application for allowances from reserve program.
73.83 Secretary of Energy's action on net income neutrality applications.
73.84 Administrator's action on applications.
73.85 Administrator review of the reserve program.
73.86 State regulatory autonomy.
APPENDIX A TO SUBPART F—LIST OF QUALIFIED ENERGY CONSERVATION MEASURES, QUALIFIED RENEWABLE GENERATION, AND MEASURES APPLICABLE FOR REDUCED UTILIZATION

Subpart G—Small Diesel Refineries

73.90 Allowance allocations for small diesel refineries.

AUTHORITY: 42 U.S.C. 7601 and 7651 *et seq.*

EDITORIAL NOTE: Part 73 was amended by revising subpart A and by adding subparts B through D at 58 FR 3650, Jan. 11, 1993, effective February 10, 1993. A document which corrected the January 11, 1993, document was published at 58 FR 40746, July 30, 1993, effective on the date of publication. Therefore, it should be noted that sections which reference July 30, 1993, in the source note are corrections to the January 11, 1993, document and are effective July 30, 1993.

Subpart A—Background and Summary

SOURCE: 58 FR 3687, Jan. 11, 1993, unless otherwise noted.

§ 73.1 Purpose and scope.

The purpose of this Part is to establish the requirements and procedures for the following:

(a) The allocation of sulfur dioxide emissions allowances;

(b) The tracking, holding, and transfer of allowances;

(c) The deduction of allowances for purposes of compliance and for purposes of offsetting excess emissions pursuant to parts 72 and 77 of this chapter;

(d) The sale of allowances through EPA-sponsored auctions and a direct sale, including the independent power producers written guarantee program; and

(e) The application for, and distribution of, allowances from the Conservation and Renewable Energy Reserve.

(f) The application for, and distribution of, allowances for desulfurization of fuel by small diesel refineries.

[58 FR 3687, Jan. 11, 1993, as amended at 58 FR 15650, Mar. 23, 1993]

§ 73.2 Applicability.

The following parties shall be subject to the provisions of this Part:

(a) Owners, operators, and designated representatives of affected sources and affected units pursuant to § 72.6 of this chapter;

(b) Any new independent power producer as defined in section 416 of the Act and § 72.2 of this chapter, except as provided in section 405(g)(6) of the Act;

(c) Any owner of an affected unit who may apply to receive allowances under the Energy Conservation and Renewable Energy Reserve Program established in accordance with section 404(f) of the Act;

(d) Any small diesel refinery as defined in § 72.2 of this chapter, and

(e) Any other person, as defined in § 72.2 of this chapter, who chooses to purchase, hold, or transfer allowances as provided in section 403(b) of the Act.

§ 73.3 General.

Part 72 of this chapter, including §§ 72.2 (definitions), 72.3 (measurements, abbreviations, and acronyms), 72.4 (Federal authority), 72.5 (State authority), 72.6 (applicability), 72.7 (new units

exemption), 72.8 (retired unit exemption), 72.9 (standard requirements), 72.10 (availability of information), and 72.11 (computation of time) of part 72, subpart A of this chapter, shall apply to this part. The procedures for appeals of decisions of the Administrator under this part are contained in part 78 of this chapter. Sections 73.3 (Definitions) and 73.4 (Deadlines), which were previously published with subpart E of this part—''Auctions, Direct Sales, and Independent Power Producers Written Guarantee'', are codified at §§72.2 and 72.12 of this chapter, respectively.

Subpart B—Allowance Allocations

SOURCE: 58 FR 3687, Jan. 11, 1993, unless otherwise noted.

§73.10 Initial allocations for phase I and II.

(a) *Phase I allowances.* The Administrator will allocate allowances to the unit account for each unit listed in Table 1 of this section in the amount listed in Column A to be held in each future year subaccount for the years 1995 through 1999.

TABLE 1.—PHASE I ALLOWANCE ALLOCATIONS

State name	Plant name	Boiler	Column A final phase 1 allocation	Column B auction and sales reserve
Alabama	Colbert	1	13213	357
		2	14907	403
		3	14995	405
		4	15005	405
		5	36202	978
	E.C. Gaston	1	17624	476
		2	18052	488
		3	17828	482
		4	18773	507
		5	58265	1575
Florida	Big Bend	BB01	27662	748
		BB02	26387	713
		BB03	26036	704
	Crist	6	18695	505
		7	30846	834
Georgia	Bowen	1BLR	54838	1482
		2BLR	53329	1441
		3BLR	69862	1888
		4BLR	69852	1888
	Hammond	1	8549	231
		2	8977	243
		3	8676	234
		4	36650	990
	Jack McDonough	MB1	19386	524
		MB2	20058	542
	Wansley	1	68908	1862
		2	63708	1722
	Yates	Y1BR	7020	190
		Y2BR	6855	185
		Y3BR	6767	183
		Y4BR	8676	234
		Y5BR	9162	248
		Y6BR	24108	652
		Y7BR	20915	565
Illinois	Baldwin	1	46052	1245
		2	48695	1316
		3	46644	1261
	Coffeen	01	12925	349
		02	39102	1057
	Grand Tower	09	6479	175
	Hennepin	2	20182	545
	Joppa Steam	1	12259	331
		2	10487	283
		3	11947	323
		4	11061	299
		5	11119	301
		6	10341	279
	Kincaid	1	34564	934
		2	37063	1002
	Meredosia	05	15227	411

TABLE 1.—PHASE I ALLOWANCE ALLOCATIONS—Continued

State name	Plant name	Boiler	Column A final phase 1 allocation	Column B auction and sales reserve
	Vermilion	2	9735	263
Indiana	Bailly	7	12256	331
		8	17134	463
	Breed	1	20280	548
	Cayuga	1	36581	989
		2	37415	1011
	Clifty Creek	1	19620	530
		2	19289	521
		3	19873	537
		4	19552	528
		5	18851	509
		6	19844	536
	Elmer W. Stout	50	4253	115
		60	5229	141
		70	25883	699
	F.B. Culley	2	4703	127
		3	18603	503
	Frank E. Ratts	1SG1	9131	247
		2SG1	9296	251
	Gibson	1	44288	1197
		2	44956	1215
		3	45033	1217
		4	44200	1195
	H.T. Pritchard	6	6325	171
	Michigan City	12	25553	691
	Petersburg	1	18011	487
		2	35496	959
	R. Gallagher	1	7115	192
		2	7980	216
		3	7159	193
		4	8386	227
	Tanners Creek	U4	27209	735
	Wabash River	1	4385	118
		2	3135	85
		3	4111	111
		5	4023	109
		6	13462	364
	Warrick	4	29577	799
Iowa	Burlington	1	10428	282
	Des Moines	11	2259	61
	George Neal	1	2571	69
	Milton L. Kapp	2	13437	363
	Prairie Creek	4	7965	215
	Riverside	9	3885	105
Kansas	Quindaro	2	4109	111
Kentucky	Coleman	C1	10954	296
		C2	12502	338
		C3	12015	325
	Cooper	1	7254	196
		2	14917	403
	E.W. Brown	1	6923	187
		2	10623	287
		3	25413	687
	Elmer Smith	1	6348	172
		2	14031	379
	Ghent	1	27662	748
	Green River	5	7614	206
	H.L. Spurlock	1	22181	599
	HMP&L Station 2	H1	12989	351
		H2	11986	324
	Paradise	3	57613	1557
	Shawnee	10	9902	268
Maryland	C.P. Crane	1	10058	272
		2	8987	243
	Chalk Point	1	21333	577
		2	23690	640
	Morgantown	1	34332	928
		2	37467	1013
Michigan	J.H. Campbell	1	18773	507
		2	22453	607

TABLE 1.—PHASE I ALLOWANCE ALLOCATIONS—Continued

State name	Plant name	Boiler	Column A final phase 1 allocation	Column B auction and sales reserve
Minnesota	High Bridge	6	4158	112
Mississippi	Jack Watson	4	17439	471
		5	35734	966
Missouri	Asbury	1	15764	426
	James River	5	4722	128
	LaBadie	1	39055	1055
		2	36718	992
		3	39249	1061
		4	34994	946
	Montrose	1	7196	194
		2	7984	216
		3	9824	266
	New Madrid	1	27497	743
		2	31625	855
	Sibley	3	15170	410
	Sioux	1	21976	594
		2	23067	623
	Thomas Hill	MB1	9980	270
		MB2	18880	510
New Hampshire	Merrimack	1	9922	268
		2	21421	579
New Jersey	B.L. England	1	8822	238
		2	11412	308
New York	Dunkirk	3	12268	332
		4	13690	370
	Greenidge	6	7342	198
	Milliken	1	10876	294
		2	12083	327
	Northport	1	19289	521
		2	23476	634
		3	25783	697
	Port Jefferson	3	10194	276
		4	12006	324
Ohio	Ashtabula	7	18351	496
	Avon Lake	11	12771	345
		12	33413	903
	Cardinal	1	37568	1015
		2	42008	1135
	Conesville	1	4615	125
		2	5360	145
		3	6029	163
		4	53463	1445
	Eastlake	1	8551	231
		2	9471	256
		3	10984	297
		4	15906	430
		5	37349	1009
	Edgewater	13	5536	150
	Gen. J.M. Gavin	1	86690	2343
		2	88312	2387
	Kyger Creek	1	18773	507
		2	18072	488
		3	17439	471
		4	18218	492
		5	18247	493
	Miami Fort	5–1	417	11
		5–2	417	11
		6	12475	337
		7	42216	1141
	Muskingum River	1	16312	441
		2	15533	420
		3	15293	413
		4	12914	349
		5	44364	1199
	Niles	1	7608	206
		2	9975	270
	Picway	9	5404	146
	R.E. Burger	5	3371	91
		6	3371	91
		7	11818	319

TABLE 1.—PHASE I ALLOWANCE ALLOCATIONS—Continued

State name	Plant name	Boiler	Column A final phase 1 allocation	Column B auction and sales reserve
		8	13626	368
	W.H. Sammis	5	26496	716
		6	43773	1183
		7	47380	1280
	Walter C. Beckjord	5	9811	265
		6	25235	682
Pennsylvania	Armstrong	1	14031	379
		2	15024	406
	Brunner Island	1	27030	730
		2	30282	818
		3	52404	1416
	Cheswick	1	38139	1031
	Conemaugh	1	58217	1573
		2	64701	1749
	Hatfield's Ferry	1	36835	995
		2	36338	982
		3	39210	1060
	Martins Creek	1	12327	333
		2	12483	337
	Portland	1	5784	156
		2	9961	269
	Shawville	1	10048	272
		2	10048	272
		3	13846	374
		4	13700	370
	Sunbury	3	8530	230
		4	11149	301
Tennessee	Allen	1	14917	403
		2	16329	441
		3	15258	412
	Cumberland	1	84419	2281
		2	92344	2496
	Gallatin	1	17400	470
		2	16855	455
		3	19493	527
		4	20701	559
	Johnsonville	1	7585	205
		10	7351	199
		2	7828	212
		3	8189	221
		4	7780	210
		5	8023	217
		6	7682	208
		7	8744	236
		8	8471	229
		9	6894	186
West Virginia	Albright	3	11684	316
	Fort Martin	1	40496	1094
		2	40116	1084
	Harrison	1	47341	1279
		2	44936	1214
		3	40408	1092
	Kammer	1	18247	493
		2	18948	512
		3	16932	458
	Mitchell	1	42823	1157
		2	44312	1198
	M.T. Storm	1	42570	1150
		2	34644	936
		3	41314	1116
Wisconsin	Edgewater	4	24099	651
	Genoa	1	22103	597
	Nelson Dewey	1	5852	158
		2	6504	176
	North Oak Creek	1	5083	137
		2	5005	135
		3	5229	141
		4	6154	166
	Pulliam	8	7312	198
	South Oak Creek	5	9416	254

TABLE 1.—PHASE I ALLOWANCE ALLOCATIONS—Continued

State name	Plant name	Boiler	Column A final phase 1 allocation	Column B auction and sales reserve
		6	11723	317
		7	15754	426
		8	15375	415

(b) *Phase II allowances.* (1) The Administrator will allocate allowances to the unit account for each unit listed in Table 2 of this section in the amount specified in Table 2 Column E to be held in the future year subaccounts representing calendar years 2000 through 2009, except that units listed in both Table 2 and 4 will be allocated allowances as specified in Table 4 Column C, multiplied by .9011, reduced by 1.3185 times Table 2 Column B, and increased by Table 2 Columns C and D.

(2) The Administrator will allocate allowances to the unit account for each unit listed in Table 2 of this section in the amount specified in Table 2 Column I to be held in the future year subaccounts representing calendar years 2010 and each year thereafter, except that units listed in both Table 2 and 4 will be allocated allowances as specified in Table 4 Column F, multiplied by .8987, reduced by Table 2 Column G, and increased by Table 2 Column H.

TABLE 2. -- PHASE II ALLOWANCE ALLOCATIONS

State	Plant Name	Boiler [1]	Allowances for years 2000–2009					Allowances for years 2010 and thereafter			
			(A) [2] Unadjusted basic	(B) Special allowance reserve deduction	(C) Additional basic (§405(a)(3))	(D) Total Bonus	(E) [3] Total annual phase II	(F) [2] Unadjusted basic	(G) Special allowance reserve deduction	(H) Additional basic (§ 405(a)(3))	(I) [4] Total annual phase II
Alabama	Barry	1	4,437	112	0	0	3,851	4,437	112	0	3,876
Alabama	Barry	2	4,904	124	0	0	4,255	4,904	124	0	4,283
Alabama	Barry	3	10,069	255	0	0	8,736	10,069	254	0	8,795
Alabama	Barry	4	11,486	291	0	0	9,966	11,486	290	0	10,033
Alabama	Barry	5	28,381	716	0	0	24,625	28,381	716	0	24,790
Alabama	Charles R Lowman	1	1,350	34	0	671	1,843	1,350	34	0	1,179
Alabama	Charles R Lowman	2	8,026	203	0	0	6,966	8,026	203	0	7,012
Alabama	Charles R Lowman	3	6,737	171	0	0	5,846	6,737	170	0	5,885
Alabama	Chickasaw	110	126	3	0	0	110	126	3	0	110
Alabama	Colbert	1	6,515	165	152	0	5,605	6,515	164	152	5,643
Alabama	Colbert	2	7,348	186	171	0	6,548	7,348	186	171	6,589
Alabama	Colbert	3	7,393	187	172	0	6,588	7,393	187	172	6,629
Alabama	Colbert	4	7,399	187	172	0	6,593	7,399	187	172	6,635
Alabama	Colbert	5	17,846	452	415	0	15,901	17,846	451	415	16,002
Alabama	E C Gaston	1	8,687	220	202	0	7,740	8,687	219	202	7,790
Alabama	E C Gaston	2	8,900	225	207	0	7,930	8,900	225	207	7,981
Alabama	E C Gaston	3	8,789	222	205	0	7,832	8,789	222	205	7,882
Alabama	E C Gaston	4	9,254	234	215	0	8,245	9,254	234	215	8,296
Alabama	E C Gaston	5	28,724	726	669	0	25,591	28,724	726	669	25,758
Alabama	Future Fossil	**1	0	0	0	0	0	0	0	0	0
Alabama	Gadsden	1	2,237	57	0	0	1,941	2,237	56	0	1,954
Alabama	Gadsden	2	2,313	59	0	0	2,006	2,313	58	0	2,021
Alabama	Gorgas	5	1,427	36	0	507	1,746	1,427	36	0	1,246
Alabama	Gorgas	6	2,547	64	0	808	3,018	2,547	64	0	2,225
Alabama	Gorgas	7	2,852	72	0	643	3,118	2,852	72	0	2,491
Alabama	Gorgas	8	5,369	136	0	60	4,719	5,369	136	0	4,689
Alabama	Gorgas	9	5,307	134	0	103	4,708	5,307	134	0	4,635
Alabama	Gorgas	10	25,647	649	0	0	22,252	25,647	647	0	22,402
Alabama	Greene County	1	9,699	246	0	0	8,418	9,699	245	0	8,472
Alabama	Greene County	2	9,054	229	0	0	7,856	9,054	229	0	7,908
Alabama	James H Miller Jr	1	13,827	350	0	2,117	14,115	13,827	349	0	12,077
Alabama	James H Miller Jr	2	20,304	514	0	0	17,618	20,304	513	0	17,734
Alabama	James H Miller Jr	3	19,906	504	0	0	17,275	19,906	503	0	17,389
Alabama	James H Miller Jr	4	9,197	233	0	0	7,980	9,197	232	0	8,033
Alabama	Mcintosh–Caes	**1	1,071	27	0	0	930	1,071	27	0	936
Alabama	Mcintosh–Caes	**2	0	0	0	0	0	0	0	0	0
Alabama	Mcwilliams	**CT1	0	0	0	0	0	0	0	0	0
Alabama	Mcwilliams	**CT2	0	0	0	0	0	0	0	0	0
Alabama	Mcwilliams	**CT3	0	0	0	0	0	0	0	0	0
Alabama	Widows Creek	1	2,757	70	0	927	3,319	2,757	70	0	2,406
Alabama	Widows Creek	2	2,416	61	0	1,097	3,194	2,416	61	0	2,110
Alabama	Widows Creek	3	2,803	71	0	903	3,335	2,803	71	0	2,448
Alabama	Widows Creek	4	3,064	78	0	773	3,431	3,064	77	0	2,677
Alabama	Widows Creek	5	3,360	85	0	624	3,540	3,360	85	0	2,935
Alabama	Widows Creek	6	2,601	66	0	1,003	3,260	2,601	66	0	2,272
Alabama	Widows Creek	7	6,357	161	0	2,241	7,757	6,357	160	0	5,553
Alabama	Widows Creek	8	6,035	153	0	2,178	7,414	6,035	152	0	5,272

TABLE 2. -- PHASE II ALLOWANCE ALLOCATIONS

State	Plant Name	Boiler [1]	Allowances for years 2000–2009					Allowances for years 2010 and thereafter			
			(A) [2] Unadjusted basic	(B) Special allowance reserve deduction	(C) Additional basic (§405(a)(3))	(D) Total Bonus	(E) [3] Total annual phase II	(F) [2] Unadjusted basic	(G) Special allowance reserve deduction	(H) Additional basic (§ 405(a)(3))	(I) [4] Total annual phase II
Arizona	Agua Fria	1	1	0	0	53	54	39	1	0	34
Arizona	Agua Fria	2	1	0	0	64	65	44	1	0	39
Arizona	Agua Fria	3	1	0	0	76	77	77	2	0	67
Arizona	Apache Station	1	379	10	0	0	329	379	10	0	331
Arizona	Apache Station	2	1,620	41	0	191	1,597	1,620	41	0	1,415
Arizona	Apache Station	3	3,235	82	0	180	2,987	3,235	82	0	2,825
Arizona	Cholla	1	2,321	59	0	192	2,206	2,321	59	0	2,027
Arizona	Cholla	2	5,779	146	0	366	5,401	5,779	146	0	5,046
Arizona	Cholla	3	5,541	140	0	296	5,106	5,541	140	0	4,840
Arizona	Cholla	4	8,879	225	0	562	8,266	8,879	224	0	7,756
Arizona	Cholla	**5	0	0	0	0	0	0	0	0	0
Arizona	Coronado	U1B	5,930	150	0	544	5,660	5,930	150	0	5,179
Arizona	Coronado	U2B	6,234	158	0	447	5,856	6,234	157	0	5,446
Arizona	De Moss Petrie	4	0	0	0	0	0	0	0	0	0
Arizona	Gila Bend	**GT1	0	0	0	0	0	0	0	0	0
Arizona	Gila Bend	**GT2	0	0	0	0	0	0	0	0	0
Arizona	Gila Bend	**GT3	0	0	0	0	0	0	0	0	0
Arizona	Gila Bend	**GT4	0	0	0	0	0	0	0	0	0
Arizona	Irvington	1	0	0	0	16	16	15	0	0	13
Arizona	Irvington	2	1	0	0	27	28	45	1	0	39
Arizona	Irvington	3	0	0	0	0	0	2	0	0	2
Arizona	Irvington	4	3,200	81	0	54	2,831	3,200	81	0	2,795
Arizona	Kyrene	K-1	8	0	0	2	7	8	0	0	7
Arizona	Kyrene	K-2	8	0	0	11	18	18	0	0	16
Arizona	Navajo	1	28,462	721	0	1,314	26,009	28,462	719	0	24,860
Arizona	Navajo	2	26,641	674	0	947	24,062	26,641	673	0	23,270
Arizona	Navajo	3	27,026	684	0	1,389	24,840	27,026	682	0	23,808
Arizona	Ocotillo	1	10	0	0	47	56	46	1	0	40
Arizona	Ocotillo	2	113	3	0	32	130	147	4	0	128
Arizona	Saguaro	1	215	5	0	18	203	215	5	0	186
Arizona	Saguaro	2	5	0	0	19	24	26	1	0	22
Arizona	Springerville	1	6,957	176	0	478	6,515	6,957	176	0	6,076
Arizona	Springerville	2	6,577	166	0	0	5,708	6,577	166	0	5,745
Arizona	West Phoenix	4	8	0	0	4	11	10	0	0	9
Arizona	West Phoenix	6	14	0	0	9	22	17	0	0	15
Arizona	Yuma Axis	1	1	0	0	41	42	45	1	0	39
Arkansas	Carl Bailey	01	9	0	0	2	10	9	0	0	8
Arkansas	Cecil Lynch	1	0	0	0	0	0	0	0	0	0
Arkansas	Cecil Lynch	2	0	0	0	0	0	0	0	0	0
Arkansas	Cecil Lynch	3	0	0	0	3	3	0	0	0	0
Arkansas	Flint Creek	1	16,604	420	0	661	15,069	16,604	419	0	14,503
Arkansas	Hamilton Moses	1	0	0	0	0	0	0	0	0	0
Arkansas	Hamilton Moses	2	0	0	0	0	0	0	0	0	0
Arkansas	Harvey Couch	1	0	0	0	7	7	3	0	0	3
Arkansas	Harvey Couch	2	9	0	0	103	111	129	3	0	113
Arkansas	Independence	1	19,533	494	0	1,061	18,011	19,533	493	0	17,062
Arkansas	Independence	2	19,554	495	0	1,289	18,257	19,554	494	0	17,079

TABLE 2. -- PHASE II ALLOWANCE ALLOCATIONS

State	Plant Name	Boiler [1]	Allowances for years 2000–2009					Allowances for years 2010 and thereafter			
			(A) [2] Unadjusted basic	(B) Special allowance reserve deduction	(C) Additional basic (§405(a)(3))	(D) Total Bonus	(E) [3] Total annual phase II	(F) [2] Unadjusted basic	(G) Special allowance reserve deduction	(H) Additional basic (§ 405(a)(3))	(I) [4] Total annual phase II
Arkansas	Lake Catherine	1	0	0	0	0	0	0	0	0	0
Arkansas	Lake Catherine	2	0	0	0	0	0	0	0	0	0
Arkansas	Lake Catherine	3	4	0	0	4	8	7	0	0	6
Arkansas	Lake Catherine	4	130	3	0	42	155	385	10	0	336
Arkansas	Mcclellan	01	14	0	0	2	15	14	0	0	13
Arkansas	Na 2 -- 7246	**1	0	0	0	0	0	0	0	0	0
Arkansas	Robert E Ritchie	1	7	0	0	47	53	78	2	0	66
Arkansas	Robert E Ritchie	2	2,439	62	0	13	2,130	2,439	62	0	2,130
Arkansas	Thomas Fitzhugh	1	0	0	0	1	1	1	0	0	1
Arkansas	White Bluff	1	22,946	581	0	859	20,766	22,946	579	0	20,043
Arkansas	White Bluff	2	26,304	666	0	881	23,703	26,304	664	0	22,976
California	Alamitos	1	3,083	76	0	76	2,751	3,083	76	0	2,693
California	Alamitos	2	3	0	0	102	105	19	0	0	17
California	Alamitos	3	15	0	0	276	290	92	2	0	81
California	Alamitos	4	618	16	0	278	814	618	16	0	539
California	Alamitos	5	4,410	112	0	366	4,193	4,410	111	0	3,852
California	Alamitos	6	1,066	27	0	549	1,478	1,066	27	0	933
California	Avon	1	0	0	0	17	17	15	0	0	13
California	Avon	2	0	0	0	0	0	16	0	0	14
California	Avon	3	0	0	0	0	0	16	0	0	14
California	Broadway	B1	142	4	0	3	126	142	4	0	124
California	Broadway	B2	176	4	0	10	163	176	4	0	154
California	Broadway	B3	12	0	0	63	74	81	2	0	71
California	Contra Costa	1	1	0	0	124	125	17	0	0	14
California	Contra Costa	2	2	0	0	0	2	26	0	0	23
California	Contra Costa	3	0	0	0	0	0	23	0	0	20
California	Contra Costa	4	0	0	0	0	0	16	0	0	14
California	Contra Costa	5	0	0	0	0	0	17	0	0	14
California	Contra Costa	6	0	0	0	0	0	14	0	0	13
California	Contra Costa	7	3	0	0	25	28	32	1	0	26
California	Contra Costa	8	1	0	0	52	53	46	1	0	40
California	Contra Costa	9	20	1	0	339	356	346	8	0	302
California	Contra Costa	10	4,536	115	0	315	4,252	4,538	115	0	3,963
California	Cool Water	1	2	0	0	8	10	12	0	0	11
California	Cool Water	2	1	0	0	5	6	9	0	0	8
California	El Centro	2	312	8	0	15	285	312	8	0	272
California	El Centro	3	661	17	0	36	610	661	17	0	577
California	El Centro	4	639	16	0	27	582	639	16	0	556
California	El Segundo	1	407	10	0	63	437	407	10	0	356
California	El Segundo	2	13	0	0	78	90	71	2	0	62
California	El Segundo	3	35	1	0	151	182	195	5	0	170
California	El Segundo	4	74	2	0	305	370	414	10	0	362
California	Encina	1	509	13	0	46	487	509	13	0	444
California	Encina	2	1,188	30	0	92	1,123	1,188	30	0	1,036
California	Encina	3	776	20	0	58	731	776	20	0	677
California	Encina	4	2,071	52	0	134	1,932	2,071	52	0	1,809
California	Encina	5	2,736	69	0	100	2,474	2,736	69	0	2,390

TABLE 2. -- PHASE II ALLOWANCE ALLOCATIONS

State	Plant Name	Boiler [1]	Allowances for years 2000–2009					Allowances for years 2010 and thereafter			
			(A) [2] Unadjusted basic	(B) Special allowance reserve deduction	(C) Additional basic (§405(a)(3))	(D) Total Bonus	(E) [3] Total annual phase II	(F) [2] Unadjusted basic	(G) Special allowance reserve deduction	(H) Additional basic (§ 405(a)(3))	(I) [4] Total annual phase II
California	Etiwanda	1	107	3	0	23	115	107	3	0	93
California	Etiwanda	2	3	0	0	26	29	20	1	0	17
California	Etiwanda	3	1,334	34	0	205	1,362	1,334	34	0	1,165
California	Etiwanda	4	53	1	0	214	261	309	8	0	270
California	Glenarm	16	0	0	0	0	0	0	0	0	0
California	Glenarm	17	0	0	0	0	0	0	0	0	0
California	Grayson	4	100	3	0	15	101	100	3	0	87
California	Grayson	5	26	1	0	14	36	48	1	0	42
California	Harbor Gen Station	1	70	2	0	7	68	70	2	0	61
California	Harbor Gen Station	2	122	3	0	14	120	122	3	0	107
California	Harbor Gen Station	3	98	2	0	8	94	98	2	0	86
California	Harbor Gen Station	4	112	3	0	6	103	112	3	0	98
California	Harbor Gen Station	5	175	4	0	18	170	175	4	0	153
California	Haynes Gen Station	1	652	17	0	111	677	652	16	0	570
California	Haynes Gen Station	2	374	9	0	10	335	374	9	0	327
California	Haynes Gen Station	3	1,291	33	0	115	1,234	1,291	33	0	1,127
California	Haynes Gen Station	4	971	25	0	152	994	971	25	0	848
California	Haynes Gen Station	5	1,375	35	0	198	1,391	1,375	35	0	1,201
California	Haynes Gen Station	6	1,449	37	0	258	1,516	1,449	37	0	1,265
California	Highgrove	1	3	0	0	1	4	3	0	0	3
California	Highgrove	2	0	0	0	1	1	0	0	0	0
California	Highgrove	3	0	0	0	1	1	1	0	0	1
California	Highgrove	4	1	0	0	2	3	3	0	0	3
California	Humboldt Bay	1	389	10	0	18	356	389	10	0	340
California	Humboldt Bay	2	2	0	0	22	24	30	1	0	26
California	Hunters Point	3	5	0	0	71	76	53	1	0	47
California	Hunters Point	4	5	0	0	0	5	54	1	0	48
California	Hunters Point	5	2	0	0	72	74	48	1	0	42
California	Hunters Point	6	1	0	0	0	1	42	1	0	37
California	Hunters Point	7	9	0	0	184	192	184	5	0	169
California	Huntington Beach	1	1,315	33	0	173	1,314	1,315	33	0	1,149
California	Huntington Beach	2	1,106	28	0	166	1,126	1,106	28	0	966
California	Huntington Beach	3	23	1	0	141	161	71	2	0	62
California	Huntington Beach	4	28	1	0	152	176	87	2	0	76
California	Kern	1	0	0	0	3	3	2	0	0	2
California	Kern	2	0	0	0	0	0	3	0	0	3
California	Kern	3	0	0	0	13	13	3	0	0	3
California	Kern	4	0	0	0	0	0	3	0	0	3
California	Magnolia	M4	38	1	0	4	37	38	1	0	33
California	Mandalay	1	1,321	33	0	223	1,369	1,321	33	0	1,154
California	Mandalay	2	1,243	31	0	204	1,283	1,243	31	0	1,086
California	Martinez	1	1	0	0	0	1	1	0	0	1
California	Martinez	2	1	0	0	0	1	1	0	0	1
California	Martinez	3	1	0	0	0	1	1	0	0	1
California	Morro Bay	1	1,609	41	0	153	1,549	1,609	41	0	1,405
California	Morro Bay	2	4	0	0	135	139	112	3	0	98
California	Morro Bay	3	3,968	101	0	332	3,793	3,968	101	0	3,483

TABLE 2. -- PHASE II ALLOWANCE ALLOCATIONS

State	Plant Name	Boiler [1]	Allowances for years 2000–2009					Allowances for years 2010 and thereafter			
			(A) [2] Unadjusted basic	(B) Special allowance reserve deduction	(C) Additional basic (§405(a)(3))	(D) Total Bonus	(E) [3] Total annual phase II	(F) [2] Unadjusted basic	(G) Special allowance reserve deduction	(H) Additional basic (§ 405(a)(3))	(I) [4] Total annual phase II
California	Morro Bay	4	3,269	83	0	173	3,027	3,269	83	0	2,873
California	Moss Landing	1	0	0	0	121	121	16	0	0	16
California	Moss Landing	2	0	0	0	0	0	16	0	0	15
California	Moss Landing	3	0	0	0	0	0	21	0	0	18
California	Moss Landing	4	0	0	0	0	0	23	0	0	20
California	Moss Landing	5	0	0	0	0	0	22	0	0	19
California	Moss Landing	6	0	0	0	0	0	15	0	0	14
California	Moss Landing	7	5	0	0	74	79	59	1	0	52
California	Moss Landing	8	497	13	0	32	462	497	13	0	434
California	Moss Landing	6–1	9,266	235	0	812	8,854	9,266	234	0	8,095
California	Moss Landing	7–1	66	2	0	918	975	792	20	0	692
California	Oleum	1	140	4	0	24	148	140	4	0	122
California	Oleum	2	156	4	0	0	138	156	4	0	136
California	Oleum	3	278	6	0	0	240	278	6	0	242
California	Oleum	4	116	2	0	0	102	116	2	0	102
California	Oleum	5	200	6	0	0	172	200	6	0	174
California	Oleum	6	232	6	0	0	202	232	6	0	202
California	Olive	01	137	3	0	12	131	137	3	0	120
California	Olive	02	10	0	0	16	25	53	1	0	47
California	Ormond Beach	1	4,317	109	0	742	4,466	4,317	109	0	3,771
California	Ormond Beach	2	4,666	116	0	500	4,550	4,666	116	0	4,077
California	Pittsburg	1	1,704	43	0	149	1,628	1,704	43	0	1,488
California	Pittsburg	2	1,401	35	0	124	1,340	1,401	35	0	1,224
California	Pittsburg	3	1,646	42	0	145	1,573	1,646	42	0	1,437
California	Pittsburg	4	1,656	42	0	132	1,569	1,656	42	0	1,446
California	Pittsburg	5	10	0	0	276	285	328	8	0	287
California	Pittsburg	6	4,061	103	0	163	3,725	4,061	103	0	3,565
California	Pittsburg	7	26	1	0	716	740	713	16	0	623
California	Potrero	3–1	16	0	0	307	321	304	8	0	265
California	Redondo Beach	5	13	0	0	66	80	144	4	0	125
California	Redondo Beach	6	11	0	0	95	105	117	3	0	102
California	Redondo Beach	7	49	1	0	511	554	551	14	0	481
California	Redondo Beach	8	50	1	0	552	599	565	14	0	494
California	Redondo Beach	11	0	0	0	36	36	4	0	0	4
California	Redondo Beach	12	0	0	0	0	0	2	0	0	2
California	Redondo Beach	13	0	0	0	0	0	4	0	0	4
California	Redondo Beach	14	0	0	0	0	0	4	0	0	4
California	Redondo Beach	15	0	0	0	0	0	3	0	0	3
California	Redondo Beach	16	0	0	0	0	0	5	0	0	5
California	Redondo Beach	17	0	0	0	0	0	6	0	0	6
California	San Bernardino	1	120	3	0	13	117	120	3	0	105
California	San Bernardino	2	7	0	0	11	17	22	1	0	19
California	Scattergood Gen Sta	1	732	19	0	112	747	732	18	0	640
California	Scattergood Gen Sta	2	652	17	0	88	654	652	16	0	570
California	Scattergood Gen Sta	3	4	0	0	258	262	285	7	0	249
California	Silver Gate	1	0	0	0	0	0	0	0	0	0
California	Silver Gate	2	0	0	0	0	0	0	0	0	0

TABLE 2. -- PHASE II ALLOWANCE ALLOCATIONS

State	Plant Name	Boiler [1]	Allowances for years 2000–2009					Allowances for years 2010 and thereafter			
			(A) [2] Unadjusted basic	(B) Special allowance reserve deduction	(C) Additional basic (§405(a)(3))	(D) Total Bonus	(E) [3] Total annual phase II	(F) [2] Unadjusted basic	(G) Special allowance reserve deduction	(H) Additional basic (§ 405(a)(3))	(I) [4] Total annual phase II
California	Silver Gate	3	0	0	0	0	0	0	0	0	0
California	Silver Gate	4	0	0	0	0	0	0	0	0	0
California	Silver Gate	5	0	0	0	0	0	0	0	0	0
California	Silver Gate	6	0	0	0	0	0	0	0	0	0
California	South Bay	1	2,627	66	0	193	2,473	2,627	66	0	2,295
California	South Bay	2	1,920	49	0	95	1,760	1,920	48	0	1,878
California	South Bay	3	2,309	58	0	157	2,161	2,309	58	0	2,017
California	South Bay	4	632	16	0	50	599	632	16	0	552
California	Valley Gen Station	1	115	3	0	21	121	115	3	0	100
California	Valley Gen Station	2	136	3	0	21	140	136	3	0	119
California	Valley Gen Station	3	444	11	0	0	366	444	11	0	366
California	Valley Gen Station	4	337	9	0	57	349	337	9	0	294
Colorado	Arapahoe	1	237	6	0	14	220	237	6	0	207
Colorado	Arapahoe	2	262	7	0	18	245	262	7	0	228
Colorado	Arapahoe	3	196	5	0	10	180	196	5	0	171
Colorado	Arapahoe	4	2,066	53	0	101	1,911	2,066	53	0	1,822
Colorado	Cameo	2	972	25	0	54	897	972	25	0	849
Colorado	Cherokee	1	2,322	59	0	106	2,120	2,322	59	0	2,026
Colorado	Cherokee	2	3,105	79	0	119	2,813	3,105	78	0	2,713
Colorado	Cherokee	3	4,063	103	0	205	3,730	4,063	103	0	3,548
Colorado	Cherokee	4	8,135	206	0	416	7,475	8,135	205	0	7,106
Colorado	Comanche	1	8,399	213	0	348	7,635	8,399	212	0	7,336
Colorado	Comanche	2	7,357	186	0	476	6,661	7,357	186	0	6,426
Colorado	Craig	C1	8,758	222	0	554	8,153	8,758	221	0	7,850
Colorado	Craig	C2	8,387	212	0	508	7,785	8,387	212	0	7,326
Colorado	Craig	C3	2,451	62	0	456	2,564	2,451	62	0	2,141
Colorado	Hayden	H1	6,589	167	0	296	6,014	6,589	166	0	5,756
Colorado	Hayden	H2	10,050	254	0	435	9,155	10,050	254	0	8,776
Colorado	Martin Drake	5	1,242	31	0	63	1,141	1,242	31	0	1,085
Colorado	Martin Drake	6	2,180	55	0	122	2,013	2,180	55	0	1,904
Colorado	Martin Drake	7	3,471	86	0	182	3,193	3,471	86	0	3,031
Colorado	Nucla	1	1,282	33	0	0	1,113	1,282	33	0	1,118
Colorado	Pawnee	1	15,698	397	0	705	14,327	15,696	396	0	13,712
Colorado	Pawnee	**2	0	0	0	0	0	0	0	0	0
Colorado	Rawhide	101	1,542	39	0	451	1,769	1,542	39	0	1,347
Colorado	Ray D Nixon	1	4,811	122	0	267	4,441	4,811	121	0	4,203
Colorado	Ray D Nixon	**NA1	0	0	0	0	0	0	0	0	0
Colorado	Valmont	5	3,403	86	0	156	3,112	3,403	86	0	2,972
Colorado	Valmont	11	0	0	0	4	4	0	0	0	0
Colorado	Valmont	12	0	0	0	0	0	0	0	0	0
Colorado	Valmont	13	0	0	0	0	0	0	0	0	0
Colorado	Valmont	14	0	0	0	0	0	0	0	0	0
Colorado	Valmont	21	20	0	0	0	20	20	0	0	16
Colorado	Valmont	22	0	0	0	0	0	0	0	0	0
Colorado	Valmont	23	0	0	0	0	0	0	0	0	0
Colorado	Valmont	24	0	0	0	0	0	0	0	0	0
Colorado	Zuni	1	389	10	0	0	336	389	10	0	340

TABLE 2. -- PHASE II ALLOWANCE ALLOCATIONS

State	Plant Name	Boiler [1]	Allowances for years 2000–2009					Allowances for years 2010 and thereafter			
			(A) [2] Unadjusted basic	(B) Special allowance reserve deduction	(C) Additional basic (§405(a)(3))	(D) Total Bonus	(E) [3] Total annual phase II	(F) [2] Unadjusted basic	(G) Special allowance reserve deduction	(H) Additional basic (§ 405(a)(3))	(I) [4] Total annual phase II
Colorado	Zuni	2	0	0	0	0	0	7	0	0	6
Colorado	Zuni	3	3	0	0	2	5	10	0	0	9
Connecticut	Bridgeport Harbor	BHB1	2,375	60	0	0	2,061	2,375	60	0	2,074
Connecticut	Bridgeport Harbor	BHB2	5,401	137	0	0	4,687	5,401	136	0	4,718
Connecticut	Bridgeport Harbor	BHB3	13,119	332	0	0	11,364	13,119	331	0	11,459
Connecticut	Devon	3	1,119	28	0	0	971	1,119	28	0	978
Connecticut	Devon	6	1,026	26	0	0	891	1,026	26	0	896
Connecticut	Devon	7	3,208	81	0	0	2,784	3,208	81	0	2,802
Connecticut	Devon	8	3,431	87	0	0	2,978	3,431	87	0	2,996
Connecticut	Devon	4A	195	5	0	0	169	195	5	0	170
Connecticut	Devon	4B	196	5	0	0	170	196	5	0	171
Connecticut	Devon	5A	177	4	0	0	154	177	4	0	155
Connecticut	Devon	5B	177	4	0	0	154	177	4	0	155
Connecticut	English	EB13	129	3	0	0	112	129	3	0	113
Connecticut	English	EB14	180	5	0	0	155	180	5	0	157
Connecticut	South Meadow	11	508	12	0	0	442	508	12	0	444
Connecticut	South Meadow	12	466	12	0	0	404	466	12	0	406
Connecticut	South Meadow	13	812	20	0	0	706	812	20	0	710
Connecticut	Middletown	1	527	13	0	0	457	527	13	0	461
Connecticut	Middletown	2	1,519	38	0	0	1,318	1,519	38	0	1,327
Connecticut	Middletown	3	3,616	97	0	0	3,311	3,616	96	0	3,333
Connecticut	Middletown	4	2,730	69	0	0	2,369	2,730	69	0	2,384
Connecticut	Montville	5	1,380	35	0	0	1,198	1,380	35	0	1,205
Connecticut	Montville	6	6,486	164	0	0	5,628	6,486	164	0	5,665
Connecticut	New Haven Harbor	NHB1	14,934	378	0	0	12,956	14,934	377	0	13,044
Connecticut	Norwalk Harbor	1	5,675	149	0	0	5,097	5,675	148	0	5,132
Connecticut	Norwalk Harbor	2	6,236	158	0	0	5,410	6,236	157	0	5,447
Delaware	Edge Moor	3	4,065	103	0	0	3,527	4,065	103	0	3,550
Delaware	Edge Moor	4	7,194	182	0	0	6,243	7,194	182	0	6,283
Delaware	Edge Moor	5	7,364	187	0	0	6,408	7,364	186	0	6,450
Delaware	Hay Road	**3	181	5	0	0	156	181	5	0	158
Delaware	Indian River	1	3,425	87	0	0	2,972	3,425	86	0	2,992
Delaware	Indian River	2	3,636	92	0	0	3,156	3,636	92	0	3,176
Delaware	Indian River	3	6,218	157	0	0	5,396	6,218	157	0	5,431
Delaware	Indian River	4	15,328	388	0	0	13,300	15,328	387	0	13,388
Delaware	Mckee Run	3	2,110	53	0	739	2,570	2,110	53	0	1,843
Delaware	Vansant	**11	157	4	0	0	136	157	4	0	137
District Of Colur	Benning	15	591	15	0	0	513	591	15	0	516
District Of Colur	Benning	16	978	25	0	0	848	978	25	0	854
Florida	Anclote	1	11,740	297	0	2,744	12,931	11,737	296	0	10,252
Florida	Anclote	2	12,421	314	0	2,075	12,853	12,418	313	0	10,847
Florida	Arvah B Hopkins	1	51	1	0	35	60	96	2	0	84
Florida	Arvah B Hopkins	2	6,311	160	0	0	5,476	6,310	159	0	5,512
Florida	Avon Park	2	561	14	0	0	487	560	14	0	489
Florida	Big Bend	BB01	13,864	351	0	0	12,030	13,863	350	0	12,109
Florida	Big Bend	BB02	13,936	353	0	0	12,094	13,937	352	0	12,173
Florida	Big Bend	BB03	13,078	331	0	0	11,348	13,077	330	0	11,422

TABLE 2. -- PHASE II ALLOWANCE ALLOCATIONS

State	Plant Name	Boiler [1]	Allowances for years 2000–2009					Allowances for years 2010 and thereafter			
			(A) [2] Unadjusted basic	(B) Special allowance reserve deduction	(C) Additional basic (§405(a)(3))	(D) Total Bonus	(E) [3] Total annual phase II	(F) [2] Unadjusted basic	(G) Special allowance reserve deduction	(H) Additional basic (§ 405(a)(3))	(I) [4] Total annual phase II
Florida	Big Bend	BB04	10,036	254	0	0	8,709	10,035	253	0	8,786
Florida	C D McIntosh Jr	1	1,033	26	0	0	897	1,032	26	0	901
Florida	C D McIntosh Jr	2	1,175	30	0	0	1,019	1,175	30	0	1,026
Florida	C D McIntosh Jr	3	11,348	287	0	0	9,848	11,348	286	0	9,913
Florida	Cape Canaveral	PCC1	4,821	122	0	0	4,183	4,818	122	0	4,208
Florida	Cape Canaveral	PCC2	5,664	143	0	0	4,915	5,662	143	0	4,946
Florida	Crist	1	40	1	0	0	35	40	1	0	35
Florida	Crist	2	0	0	0	3	3	3	0	0	3
Florida	Crist	3	0	0	0	4	4	4	0	0	4
Florida	Crist	4	2,819	71	0	0	2,448	2,819	71	0	2,462
Florida	Crist	5	2,776	70	0	0	2,410	2,776	70	0	2,425
Florida	Crist	6	9,595	243	0	0	8,325	9,584	242	0	8,380
Florida	Crist	7	14,307	362	0	0	12,415	14,305	361	0	12,495
Florida	Crystal River	1	14,196	359	0	0	12,320	14,197	358	0	12,401
Florida	Crystal River	2	16,334	413	0	0	14,173	16,334	412	0	14,266
Florida	Crystal River	4	27,029	684	0	0	23,452	27,026	682	0	23,607
Florida	Crystal River	5	28,861	732	0	0	25,040	28,860	730	0	25,207
Florida	Ct	**1	0	0	0	0	0	0	0	0	0
Florida	Ct	**2	0	0	0	0	0	0	0	0	0
Florida	Ct	**3	0	0	0	0	0	0	0	0	0
Florida	Ct	**4	0	0	0	0	0	0	0	0	0
Florida	Cutler	PCU5	0	0	0	0	0	4	0	0	4
Florida	Cutler	PCU6	0	0	0	0	0	10	0	0	9
Florida	Debary	**7	805	20	0	0	699	805	20	0	703
Florida	Debary	**8	805	20	0	0	699	805	20	0	703
Florida	Debary	**9	805	20	0	0	699	805	20	0	703
Florida	Debary	**10	805	20	0	0	699	805	20	0	703
Florida	Deerhaven	B1	44	1	0	59	98	130	3	0	114
Florida	Deerhaven	B2	9,451	239	0	0	8,201	9,450	239	0	8,254
Florida	Deerhaven	**NA1	0	0	0	0	0	0	0	0	0
Florida	Deerhaven	**NA2	0	0	0	0	0	0	0	0	0
Florida	F J Gannon	GB01	3,829	97	0	490	3,812	3,828	97	0	3,343
Florida	F J Gannon	GB02	4,730	120	0	283	4,387	4,729	119	0	4,131
Florida	F J Gannon	GB03	6,472	164	0	0	5,615	6,472	163	0	5,653
Florida	F J Gannon	GB04	7,055	179	0	50	6,171	7,055	178	0	6,182
Florida	F J Gannon	GB05	7,471	189	0	0	6,482	7,471	189	0	6,525
Florida	F J Gannon	GB06	11,520	292	0	0	9,996	11,520	291	0	10,062
Florida	Fort Myers	PFM1	3,639	92	0	0	3,156	3,637	92	0	3,177
Florida	Fort Myers	PFM2	10,803	273	0	0	9,374	10,800	273	0	9,433
Florida	G E Turner	2	92	2	0	461	542	92	2	0	81
Florida	G E Turner	3	820	21	0	0	712	819	21	0	715
Florida	G E Turner	4	696	18	0	0	603	696	18	0	608
Florida	Henry D King	7	84	2	0	7	83	74	2	0	65
Florida	Henry D King	8	6	0	0	21	26	39	1	0	34
Florida	Higgins	1	481	12	0	0	418	481	12	0	420
Florida	Higgins	2	541	14	0	0	469	541	14	0	472
Florida	Higgins	3	495	13	0	536	964	494	12	0	432

TABLE 2. -- PHASE II ALLOWANCE ALLOCATIONS

State	Plant Name	Boiler [1]	Allowances for years 2000–2009					Allowances for years 2010 and thereafter			
			(A) [2] Unadjusted basic	(B) Special allowance reserve deduction	(C) Additional basic (§405(a)(3))	(D) Total Bonus	(E) [3] Total annual phase II	(F) [2] Unadjusted basic	(G) Special allowance reserve deduction	(H) Additional basic (§ 405(a)(3))	(I) [4] Total annual phase II
Florida	Hookers Point	HB01	201	4	0	0	177	201	4	0	177
Florida	Hookers Point	HB02	231	5	0	0	202	231	5	0	202
Florida	Hookers Point	HB03	530	13	0	0	461	529	13	0	462
Florida	Hookers Point	HB04	799	20	0	0	692	798	20	0	695
Florida	Hookers Point	HB05	1,422	36	0	0	1,234	1,418	36	0	1,236
Florida	Hookers Point	HB06	545	14	0	0	472	544	14	0	475
Florida	Indian River [1]	1	1,359	34	0	0	1,180	1,356	34	0	1,186
Florida	Indian River	2	1,791	45	0	0	1,555	1,790	45	0	1,564
Florida	Indian River	3	4,183	105	0	0	3,612	4,162	105	0	3,636
Florida	Indian River	**C	0	0	0	0	0	0	0	0	0
Florida	J D Kennedy	8	223	6	0	0	193	222	6	0	194
Florida	J D Kennedy	9	630	16	0	0	547	630	16	0	550
Florida	J D Kennedy	10	2,257	57	0	0	1,959	2,257	57	0	1,971
Florida	J R Kelly	JRK6	44	1	0	19	58	77	2	0	67
Florida	Smith	1	7,402	187	0	0	6,424	7,402	187	0	6,466
Florida	Smith	2	8,666	220	0	0	7,539	8,666	219	0	7,569
Florida	Larsen Memorial	7	350	9	0	0	303	350	9	0	306
Florida	Larsen Memorial	**8	759	19	0	0	659	759	19	0	663
Florida	Larsen Memorial	**9	0	0	0	0	0	0	0	0	0
Florida	Lauderdale	PFL4	896	23	0	0	776	895	23	0	781
Florida	Lauderdale	PFL5	916	23	0	0	796	916	23	0	802
Florida	Manatee	PMT1	15,736	396	0	0	13,654	15,734	397	0	13,743
Florida	Manatee	PMT2	14,499	367	0	0	12,581	14,494	366	0	12,660
Florida	Martin	PMR1	5,813	147	0	0	5,044	5,811	147	0	5,075
Florida	Martin	PMR2	6,895	175	0	0	5,982	6,892	174	0	6,020
Florida	Na 1 -- 7238	**1	0	0	0	0	0	0	0	0	0
Florida	Northside	1	5,586	141	0	1,334	6,182	5,586	141	0	4,879
Florida	Northside	2	1,189	30	0	5,220	6,251	1,186	30	0	1,036
Florida	Northside	3	7,586	192	0	4,478	11,081	7,584	191	0	6,625
Florida	P L Bartow	1	2,801	71	0	355	2,785	2,800	71	0	2,445
Florida	P L Bartow	2	2,773	70	0	534	2,941	2,772	70	0	2,421
Florida	P L Bartow	3	6,203	157	0	0	5,383	6,202	157	0	5,417
Florida	Port Everglades	PPE1	2,672	68	0	0	2,318	2,671	67	0	2,333
Florida	Port Everglades	PPE2	2,755	70	0	0	2,391	2,754	70	0	2,405
Florida	Port Everglades	PPE3	6,718	170	0	0	5,830	6,717	170	0	5,867
Florida	Port Everglades	PPE4	6,811	172	0	0	5,911	6,810	172	0	5,948
Florida	Putnam	HRSG11	1,879	48	0	0	1,629	1,879	47	0	1,642
Florida	Putnam	HRSG12	1,879	48	0	0	1,629	1,879	47	0	1,642
Florida	Putnam	HRSG21	1,791	45	0	0	1,555	1,790	45	0	1,564
Florida	Putnam	HRSG22	1,791	45	0	0	1,555	1,790	45	0	1,564
Florida	Riviera	PRV2	106	3	0	0	92	106	3	0	92
Florida	Riviera	PRV3	4,081	103	0	0	3,542	4,080	103	0	3,564
Florida	Riviera	PRV4	4,048	102	0	0	3,514	4,047	102	0	3,536
Florida	S O Purdom	7	506	13	0	0	438	506	13	0	442
Florida	Sanford	PSN3	1,236	31	0	0	1,073	1,234	31	0	1,078
Florida	Sanford	PSN4	3,778	96	0	5,290	8,568	3,771	95	0	3,294
Florida	Sanford	PSN5	3,662	93	0	0	3,177	3,656	92	0	3,194

TABLE 2. -- PHASE II ALLOWANCE ALLOCATIONS

State	Plant Name	Boiler [1]	Allowances for years 2000–2009					Allowances for years 2010 and thereafter			
			(A) [2] Unadjusted basic	(B) Special allowance reserve deduction	(C) Additional basic (§405(a)(3))	(D) Total Bonus	(E) [3] Total annual phase II	(F) [2] Unadjusted basic	(G) Special allowance reserve deduction	(H) Additional basic (§ 405(a)(3))	(I) [4] Total annual phase II
Florida	Scholz	1	2,236	57	0	0	1,942	2,236	56	0	1,955
Florida	Scholz	2	2,343	59	0	0	2,033	2,343	59	0	2,047
Florida	Seminole	1	21,011	532	0	0	18,232	21,011	530	0	18,353
Florida	Seminole	2	21,011	532	0	0	18,232	21,011	530	0	18,353
Florida	Southside	1	1,063	27	0	0	923	1,063	27	0	928
Florida	Southside	2	1,100	28	0	0	954	1,099	28	0	960
Florida	Southside	3	258	7	0	0	223	257	6	0	225
Florida	Southside	4	704	18	0	0	610	704	18	0	615
Florida	Southside	5	2,070	52	0	0	1,797	2,070	52	0	1,808
Florida	St Johns River Power	1	13,237	335	0	0	11,486	13,236	334	0	11,561
Florida	St Johns River Power	2	12,998	329	0	0	11,279	12,998	326	0	11,353
Florida	Stanton Energy	1	12,906	327	0	0	11,199	12,906	326	0	11,273
Florida	Stanton Energy	2	0	0	0	0	0	0	0	0	0
Florida	Stock Island	1	2,939	74	0	0	2,550	2,939	74	0	2,567
Florida	Stock Island D 1	**NA1	114	3	0	0	99	114	3	0	99
Florida	Stock Island D 2	**NA2	114	3	0	0	99	114	3	0	99
Florida	Suwannee River	1	289	7	0	0	251	289	7	0	253
Florida	Suwannee River	2	288	7	0	0	251	288	7	0	252
Florida	Suwannee River	3	739	19	0	0	641	738	19	0	644
Florida	Tom G Smith	S-3	1	0	0	8	9	12	0	0	11
Florida	Tom G Smith	S-4	75	2	0	14	80	91	2	0	80
Florida	Turkey Point	PTP1	6,705	170	0	0	5,816	6,704	169	0	5,856
Florida	Turkey Point	PTP2	6,755	171	0	0	5,861	6,754	171	0	5,899
Florida	Vero Beach Municipal	3	360	9	0	0	312	360	9	0	315
Florida	Vero Beach Municipal	4	97	2	0	21	106	132	3	0	116
Florida	Vero Beach Municipal	**5	362	9	0	0	314	362	9	0	316
Georgia	Arkwright	1	1,472	37	0	160	1,438	1,472	37	0	1,286
Georgia	Arkwright	2	1,544	39	0	119	1,456	1,544	39	0	1,349
Georgia	Arkwright	3	1,759	45	0	0	1,526	1,759	44	0	1,537
Georgia	Arkwright	4	1,433	36	0	0	1,244	1,433	36	0	1,252
Georgia	Atkinson	A2	1	0	0	3	4	4	0	0	4
Georgia	Atkinson	A3	2	0	0	4	6	6	0	0	5
Georgia	Atkinson	A4	2	0	0	3	5	5	0	0	4
Georgia	Atkinson	A1A	1	0	0	1	2	2	0	0	2
Georgia	Atkinson	A1B	1	0	0	1	2	2	0	0	2
Georgia	Bowen	1BLR	26,288	665	612	0	23,421	26,288	664	612	23,573
Georgia	Bowen	2BLR	27,036	684	629	0	24,087	27,036	683	629	24,244
Georgia	Bowen	3BLR	34,442	873	803	0	30,685	34,442	870	803	30,887
Georgia	Bowen	4BLR	34,434	873	802	0	30,677	34,434	870	802	30,879
Georgia	Hammond	1	4,215	107	98	0	3,755	4,215	106	98	3,780
Georgia	Hammond	2	4,424	112	103	0	3,943	4,424	112	103	3,967
Georgia	Hammond	3	4,277	108	100	0	3,811	4,277	108	100	3,836
Georgia	Hammond	4	18,068	457	421	0	16,100	18,068	456	421	16,203
Georgia	Harllee Branch	1	11,265	285	0	0	9,775	11,265	284	0	9,840
Georgia	Harllee Branch	2	13,325	337	0	0	11,564	13,325	336	0	11,639
Georgia	Harllee Branch	3	18,333	464	0	0	15,907	18,333	463	0	16,013
Georgia	Harllee Branch	4	18,193	461	0	0	15,786	18,193	459	0	15,891

TABLE 2. – – PHASE II ALLOWANCE ALLOCATIONS

State	Plant Name	Boiler [1]	Allowances for years 2000–2009					Allowances for years 2010 and thereafter			
			(A) [2] Unadjusted basic	(B) Special allowance reserve deduction	(C) Additional basic (§405(a)(3))	(D) Total Bonus	(E) [3] Total annual phase II	(F) [2] Unadjusted basic	(G) Special allowance reserve deduction	(H) Additional basic (§ 405(a)(3))	(I) [4] Total annual phase II
Georgia	Jack Mcdonough	MB1	9,556	242	222	0	8,514	9,556	241	222	8,569
Georgia	Jack Mcdonough	MB2	9,890	250	230	0	8,812	9,890	250	230	8,866
Georgia	Mcintosh	1	6,348	161	0	0	5,506	6,348	160	0	5,545
Georgia	Mcmanus	1	102	3	0	755	843	102	3	0	89
Georgia	Mcmanus	2	226	6	0	1,082	1,278	226	6	0	197
Georgia	Mitchell	3	6,242	158	0	0	5,416	6,242	156	0	5,452
Georgia	Port Wentworth	1	1,746	44	0	0	1,517	1,746	44	0	1,527
Georgia	Port Wentworth	2	1,672	42	0	46	1,496	1,672	42	0	1,461
Georgia	Port Wentworth	3	3,386	86	0	1	2,939	3,386	85	0	2,956
Georgia	Port Wentworth	4	499	13	0	0	432	499	13	0	435
Georgia	Riverside	12	5	0	0	0	5	5	0	0	4
Georgia	Scherer	1	24,092	610	0	0	20,904	24,092	608	0	21,044
Georgia	Scherer	2	24,263	614	0	0	21,052	24,263	613	0	21,192
Georgia	Scherer	3	24,302	615	0	0	21,086	24,302	614	0	21,227
Georgia	Scherer	4	24,274	614	0	0	21,062	24,274	613	0	21,202
Georgia	Wansley	1	33,969	861	791	0	30,262	33,969	859	791	30,461
Georgia	Wansley	2	31,404	796	731	0	27,977	31,404	794	731	28,161
Georgia	Yates	Y1BR	3,459	88	81	0	3,081	3,459	87	81	3,103
Georgia	Yates	Y2BR	3,379	86	79	0	3,011	3,379	85	79	3,031
Georgia	Yates	Y3BR	3,337	84	78	0	2,974	3,337	84	78	2,993
Georgia	Yates	Y4BR	4,278	108	100	0	3,812	4,278	108	100	3,837
Georgia	Yates	Y5BR	4,515	114	105	0	4,023	4,515	114	105	4,049
Georgia	Yates	Y6BR	11,885	301	277	0	10,590	11,885	300	277	10,658
Georgia	Yates	Y7BR	11,691	296	272	0	10,416	11,691	295	272	10,484
Illinois	Baldwin	1	20,165	510	469	0	17,967	20,165	509	469	18,063
Illinois	Baldwin	2	21,320	540	496	0	18,995	21,320	538	496	19,119
Illinois	Baldwin	3	20,425	517	475	0	18,199	20,425	516	475	18,315
Illinois	Coffeen	01	5,660	143	132	0	5,043	5,660	143	132	5,076
Illinois	Coffeen	02	17,119	433	399	0	15,253	17,119	432	399	15,352
Illinois	Collins	1	1,516	38	0	0	1,315	1,516	38	0	1,324
Illinois	Collins	2	1,295	33	0	0	1,123	1,295	33	0	1,131
Illinois	Collins	3	2,266	56	0	0	1,963	2,266	56	0	1,996
Illinois	Collins	4	1,866	47	0	0	1,620	1,866	47	0	1,630
Illinois	Collins	5	2,067	52	0	0	1,795	2,067	52	0	1,806
Illinois	Crawford	7	4,126	104	0	3,626	7,206	4,126	104	0	3,604
Illinois	Crawford	8	6,390	162	0	4,257	9,802	6,390	161	0	5,582
Illinois	Dallman	31	1,583	40	0	0	1,373	1,583	40	0	1,383
Illinois	Dallman	32	1,791	45	0	0	1,555	1,791	45	0	1,565
Illinois	Dallman	33	5,941	150	0	0	5,156	5,941	150	0	5,189
Illinois	Duck Creek	1	12,799	324	0	0	11,106	12,799	323	0	11,180
Illinois	E D Edwards	1	2,754	70	0	489	2,879	2,754	70	0	2,405
Illinois	E D Edwards	2	7,711	195	0	168	6,660	7,711	195	0	6,735
Illinois	E D Edwards	3	9,882	250	0	477	9,052	9,882	249	0	8,832
Illinois	Fisk	19	4,109	104	0	8,436	10,002	4,109	104	0	3,569
Illinois	Grand Tower	07	283	7	0	0	246	283	7	0	247
Illinois	Grand Tower	08	269	7	0	0	233	269	7	0	235
Illinois	Grand Tower	09	2,835	72	66	0	2,526	2,835	72	66	2,542

TABLE 2. -- PHASE II ALLOWANCE ALLOCATIONS

State	Plant Name	Boiler [1]	Allowances for years 2000–2009					Allowances for years 2010 and thereafter			
			(A) [2] Unadjusted basic	(B) Special allowance reserve deduction	(C) Additional basic (§405(a)(3))	(D) Total Bonus	(E) [3] Total annual phase II	(F) [2] Unadjusted basic	(G) Special allowance reserve deduction	(H) Additional basic (§ 405(a)(3))	(I) [4] Total annual phase II
Illinois	Havana	1	40	0	0	0	35	40	0	0	35
Illinois	Havana	2	50	0	0	0	45	50	0	0	45
Illinois	Havana	3	40	0	0	0	35	40	0	0	35
Illinois	Havana	4	40	0	0	0	35	40	0	0	35
Illinois	Havana	5	40	0	0	0	35	40	0	0	35
Illinois	Havana	6	40	0	0	0	35	40	0	0	35
Illinois	Havana	7	40	0	0	0	35	40	0	0	35
Illinois	Havana	8	40	0	0	0	35	40	0	0	35
Illinois	Havana	9	7,679	194	0	2,085	8,749	7,679	194	0	8,707
Illinois	Hennepin	1	2,307	58	0	0	2,002	2,307	58	0	2,015
Illinois	Hennepin	2	8,837	224	208	0	7,873	8,837	223	208	7,925
Illinois	Hutsonville	05	2,540	64	0	0	2,204	2,540	64	0	2,219
Illinois	Hutsonville	06	2,631	67	0	0	2,283	2,631	66	0	2,299
Illinois	Joliet 29	71	6,659	169	0	1,752	7,530	6,659	168	0	5,817
Illinois	Joliet 29	72	5,427	137	0	1,428	6,136	5,427	137	0	4,740
Illinois	Joliet 29	81	6,241	158	0	1,834	7,249	6,241	158	0	5,451
Illinois	Joliet 29	82	6,466	164	0	1,900	7,510	6,466	163	0	5,648
Illinois	Joliet 9	5	6,714	170	0	2,800	8,626	6,714	169	0	5,865
Illinois	Joppa Steam	1	6,042	153	0	0	5,243	6,042	153	0	5,277
Illinois	Joppa Steam	2	5,168	131	0	0	4,484	5,168	130	0	4,515
Illinois	Joppa Steam	3	5,888	149	0	0	5,109	5,888	149	0	5,143
Illinois	Joppa Steam	4	5,454	138	0	0	4,732	5,454	138	0	4,764
Illinois	Joppa Steam	5	5,479	139	0	0	4,753	5,479	138	0	4,786
Illinois	Joppa Steam	6	5,096	129	0	0	4,422	5,096	129	0	4,451
Illinois	Kincaid	1	15,134	383	352	0	13,484	15,134	382	352	13,571
Illinois	Kincaid	2	16,676	422	388	0	14,858	16,676	421	388	14,954
Illinois	Lakeside	7	722	18	0	0	627	722	18	0	631
Illinois	Lakeside	8	371	9	0	0	322	371	9	0	324
Illinois	Lakeside	GT2	0	0	0	0	0	0	0	0	0
Illinois	Marion	1	534	14	0	0	462	534	13	0	467
Illinois	Marion	2	547	14	0	0	474	547	14	0	478
Illinois	Marion	3	593	15	0	0	514	593	15	0	518
Illinois	Marion	4	7,817	198	0	0	6,782	7,817	197	0	6,828
Illinois	Meredosia	01	341	9	0	0	295	341	9	0	297
Illinois	Meredosia	02	367	9	0	0	319	367	9	0	321
Illinois	Meredosia	03	320	8	0	0	277	320	8	0	280
Illinois	Meredosia	04	291	7	0	0	253	291	7	0	255
Illinois	Meredosia	05	6,668	169	155	0	5,941	6,668	168	155	5,980
Illinois	Meredosia	06	52	1	0	0	46	52	1	0	46
Illinois	Newton	1	17,654	452	0	0	15,493	17,654	451	0	15,595
Illinois	Newton	2	15,919	403	0	0	13,813	15,919	402	0	13,905
Illinois	Powerton	51	9,631	244	0	2,275	10,632	9,631	243	0	6,412
Illinois	Powerton	52	9,515	241	0	2,247	10,503	9,515	240	0	6,311
Illinois	Powerton	61	9,787	248	0	1,951	10,442	9,787	247	0	6,549
Illinois	Powerton	62	9,864	250	0	1,966	10,525	9,864	249	0	6,616
Illinois	R S Wallace	9	70	2	0	840	901	70	2	0	61
Illinois	R S Wallace	10	202	5	0	2,256	2,430	202	5	0	177

TABLE 2. -- PHASE II ALLOWANCE ALLOCATIONS

State	Plant Name	Boiler [1]	Allowances for years 2000–2009					Allowances for years 2010 and thereafter			
			(A) [2] Unadjusted basic	(B) Special allowance reserve deduction	(C) Additional basic (§405(a)(3))	(D) Total Bonus	(E) [3] Total annual phase II	(F) [2] Unadjusted basic	(G) Special allowance reserve deduction	(H) Additional basic (§ 405(a)(3))	(I) [4] Total annual phase II
Illinois	Venice	1	5	0	0	0	5	5	0	0	5
Illinois	Venice	2	2	0	0	0	2	2	0	0	2
Illinois	Venice	3	19	0	0	0	17	19	0	0	17
Illinois	Venice	4	16	0	0	0	14	16	0	0	14
Illinois	Venice	5	11	0	0	0	10	11	0	0	9
Illinois	Venice	6	10	0	0	0	10	10	0	0	9
Illinois	Venice	7	2	0	0	0	2	2	0	0	2
Illinois	Venice	8	2	0	0	0	2	2	0	0	2
Illinois	Vermilion	1	3,239	82	0	0	2,811	3,239	82	0	2,829
Illinois	Vermilion	2	4,264	108	99	0	3,798	4,264	108	99	3,823
Illinois	Waukegan	7	7,203	182	0	1,911	8,162	7,203	182	0	8,291
Illinois	Waukegan	8	5,710	145	0	2,843	7,797	5,710	144	0	4,966
Illinois	Waukegan	17	1,712	43	0	1,605	3,091	1,712	43	0	1,496
Illinois	Will County	1	2,914	74	0	2,772	5,300	2,914	74	0	2,545
Illinois	Will County	2	2,857	72	0	2,351	4,831	2,857	72	0	2,496
Illinois	Will County	3	5,928	150	0	1,807	6,951	5,928	150	0	5,178
Illinois	Will County	4	10,418	264	0	4,667	13,726	10,418	263	0	9,100
Illinois	Wood River	1	0	0	0	3	3	3	0	0	3
Illinois	Wood River	2	0	0	0	3	3	3	0	0	3
Illinois	Wood River	3	0	0	0	3	3	3	0	0	3
Illinois	Wood River	4	2,009	51	0	501	2,244	2,009	51	0	1,755
Illinois	Wood River	5	10,834	274	0	0	9,401	10,834	274	0	9,463
Indiana	A B Brown	1	6,123	155	0	0	5,313	6,123	155	0	5,348
Indiana	A B Brown	2	5,176	131	0	0	4,491	5,176	131	0	4,521
Indiana	A B Brown	**4	730	18	0	0	634	730	18	0	638
Indiana	Bailly	7	5,355	136	125	0	4,772	5,355	135	125	4,803
Indiana	Bailly	8	7,646	194	178	0	6,814	7,646	193	178	6,856
Indiana	Breed	1	8,878	225	207	0	7,910	8,878	224	207	7,962
Indiana	Cayuga	1	16,016	405	373	0	14,272	16,016	404	373	14,365
Indiana	Cayuga	2	16,360	415	381	0	14,594	16,360	414	381	14,688
Indiana	Clifty Creek	1	9,673	245	0	0	8,394	9,673	244	0	8,449
Indiana	Clifty Creek	2	9,511	241	0	0	8,253	9,511	240	0	8,308
Indiana	Clifty Creek	3	9,797	248	0	0	8,500	9,797	247	0	8,556
Indiana	Clifty Creek	4	9,638	244	0	0	8,363	9,638	243	0	8,419
Indiana	Clifty Creek	5	9,292	235	0	0	8,063	9,292	235	0	8,116
Indiana	Clifty Creek	6	9,781	248	0	0	8,486	9,781	247	0	8,543
Indiana	Dean H Mitchell	4	1,681	43	0	1,645	3,103	1,681	42	0	1,469
Indiana	Dean H Mitchell	5	2,122	54	0	1,181	3,002	2,122	54	0	1,653
Indiana	Dean H Mitchell	6	1,907	48	0	1,301	2,955	1,907	48	0	1,666
Indiana	Dean H Mitchell	11	1,397	35	0	1,435	2,648	1,397	35	0	1,221
Indiana	Edwardsport	6–1	0	0	0	0	0	0	0	0	0
Indiana	Edwardsport	7–1	397	10	0	0	345	397	10	0	347
Indiana	Edwardsport	7–2	404	10	0	0	351	404	10	0	353
Indiana	Edwardsport	8–1	429	11	0	0	372	429	11	0	375
Indiana	Elmer W Stout	1	0	0	0	0	0	0	0	0	0
Indiana	Elmer W Stout	2	0	0	0	0	0	0	0	0	0
Indiana	Elmer W Stout	3	0	0	0	0	0	0	0	0	0

TABLE 2. -- PHASE II ALLOWANCE ALLOCATIONS

State	Plant Name	Boiler [1]	Allowances for years 2000-2009					Allowances for years 2010 and thereafter			
			(A) [2] Unadjusted basic	(B) Special allowance reserve deduction	(C) Additional basic (§405(a)(3))	(D) Total Bonus	(E) [3] Total annual phase II	(F) [2] Unadjusted basic	(G) Special allowance reserve deduction	(H) Additional basic (§ 405(a)(3))	(I) [4] Total annual phase II
Indiana	Elmer W Stout	4	0	0	0	0	0	0	0	0	0
Indiana	Elmer W Stout	5	0	0	0	0	0	0	0	0	0
Indiana	Elmer W Stout	6	0	0	0	0	0	0	0	0	0
Indiana	Elmer W Stout	7	0	0	0	0	0	0	0	0	0
Indiana	Elmer W Stout	8	0	0	0	0	0	0	0	0	0
Indiana	Elmer W Stout	9	1	0	0	0	1	1	0	0	1
Indiana	Elmer W Stout	10	2	0	0	0	2	2	0	0	2
Indiana	Elmer W Stout	50	1,864	47	43	0	1,861	1,864	47	43	1,871
Indiana	Elmer W Stout	60	2,291	58	53	0	2,040	2,291	58	53	2,054
Indiana	Elmer W Stout	70	11,332	287	264	0	10,098	11,332	286	264	10,162
Indiana	F B Culley	1	945	24	0	0	820	945	24	0	825
Indiana	F B Culley	2	1,958	50	46	0	1,744	1,958	49	46	1,757
Indiana	F B Culley	3	8,146	206	190	0	7,259	8,146	206	190	7,305
Indiana	Frank E Ratts	1SG1	4,000	101	93	0	3,565	4,000	101	93	3,587
Indiana	Frank E Ratts	2SG1	4,073	103	95	0	3,629	4,073	103	95	3,652
Indiana	Gibson	1	19,390	491	451	0	17,276	19,390	489	451	17,388
Indiana	Gibson	2	19,663	498	458	0	17,537	19,663	497	458	17,650
Indiana	Gibson	3	19,717	499	459	0	17,588	19,717	498	459	17,681
Indiana	Gibson	4	19,355	490	451	0	17,245	19,355	489	451	17,357
Indiana	Gibson	5	20,781	526	0	0	18,032	20,781	525	0	18,151
Indiana	H T Pritchard	1	0	0	0	0	0	0	0	0	0
Indiana	H T Pritchard	2	1	0	0	0	1	1	0	0	1
Indiana	H T Pritchard	3	274	7	0	0	238	274	7	0	239
Indiana	H T Pritchard	4	609	15	0	0	529	609	15	0	532
Indiana	H T Pritchard	5	681	17	0	0	592	681	17	0	595
Indiana	H T Pritchard	6	2,769	70	64	0	2,467	2,769	70	64	2,483
Indiana	Merom	1SG1	17,055	432	0	0	14,799	17,055	431	0	14,897
Indiana	Merom	2SG1	16,939	429	0	0	14,698	16,939	428	0	14,795
Indiana	Michigan City	4	1,039	26	0	0	902	1,039	26	0	908
Indiana	Michigan City	5	1,154	29	0	0	1,001	1,154	29	0	1,008
Indiana	Michigan City	6	1,165	30	0	0	1,010	1,165	30	0	1,017
Indiana	Michigan City	12	11,189	283	260	0	9,969	11,189	282	260	10,034
Indiana	Na 1 -- 7221	**1	0	0	0	0	0	0	0	0	0
Indiana	Na 1 -- 7221	**2	0	0	0	0	0	0	0	0	0
Indiana	Na 1 -- 7221	**3	0	0	0	0	0	0	0	0	0
Indiana	Na 1 -- 7221	**4	0	0	0	0	0	0	0	0	0
Indiana	Na 1 -- 7228	**4	0	0	0	0	0	0	0	0	0
Indiana	Na 1 -- 7228	**5	0	0	0	0	0	0	0	0	0
Indiana	Noblesville	1	75	2	0	0	66	75	2	0	65
Indiana	Noblesville	2	62	2	0	0	54	62	2	0	53
Indiana	Noblesville	3	46	1	0	0	40	46	1	0	40
Indiana	Petersburg	1	7,869	200	184	0	7,029	7,869	199	184	7,075
Indiana	Petersburg	2	15,544	393	362	0	13,850	15,544	392	362	13,940
Indiana	Petersburg	3	19,296	488	0	0	16,743	19,296	487	0	16,855
Indiana	Petersburg	4	18,460	467	0	0	16,019	18,460	466	0	16,124
Indiana	R Gallagher	1	3,236	82	75	0	2,885	3,236	82	75	2,903
Indiana	R Gallagher	2	3,494	88	81	0	3,113	3,494	88	81	3,133

TABLE 2. -- PHASE II ALLOWANCE ALLOCATIONS

State	Plant Name	Boiler [1]	Allowances for years 2000–2009					Allowances for years 2010 and thereafter			
			(A) [2] Unadjusted basic	(B) Special allowance reserve deduction	(C) Additional basic (§405(a)(3))	(D) Total Bonus	(E) [3] Total annual phase II	(F) [2] Unadjusted basic	(G) Special allowance reserve deduction	(H) Additional basic (§ 405(a)(3))	(I) [4] Total annual phase II
Indiana	R Gallagher	3	3,134	79	73	0	2,792	3,134	79	73	2,811
Indiana	R Gallagher	4	3,265	83	76	0	2,908	3,265	82	76	2,926
Indiana	R M Schahfer	14	5,553	141	0	5,496	10,316	5,553	140	0	4,851
Indiana	R M Schahfer	15	5,089	129	0	6,239	10,655	5,089	128	0	4,446
Indiana	R M Schahfer	17	5,969	151	0	0	5,180	5,969	151	0	5,213
Indiana	R M Schahfer	18	5,930	150	0	0	5,146	5,930	150	0	5,179
Indiana	Rockport	MB1	37,716	956	0	0	32,722	37,716	953	0	32,944
Indiana	Rockport	MB2	37,716	956	0	0	32,722	37,716	953	0	32,944
Indiana	State Line	3	3,938	100	0	1,260	4,697	3,938	99	0	3,440
Indiana	State Line	4	6,862	174	0	902	6,874	6,862	174	0	6,011
Indiana	Tanners Creek	U1	2,324	59	0	742	2,758	2,324	59	0	2,030
Indiana	Tanners Creek	U2	2,439	62	0	663	2,760	2,439	62	0	2,130
Indiana	Tanners Creek	U3	2,609	66	0	1,797	4,061	2,609	66	0	2,279
Indiana	Tanners Creek	U4	11,915	302	277	0	10,616	11,915	301	277	10,664
Indiana	Wabash River	1	1,918	49	45	0	1,708	1,918	48	45	1,721
Indiana	Wabash River	2	1,549	39	36	0	1,380	1,549	39	36	1,389
Indiana	Wabash River	3	1,799	46	42	0	1,603	1,799	45	42	1,614
Indiana	Wabash River	4	1,750	44	0	0	1,519	1,750	44	0	1,529
Indiana	Wabash River	5	1,761	45	41	0	1,569	1,761	44	41	1,580
Indiana	Wabash River	6	5,894	149	137	0	5,251	5,894	149	137	5,265
Indiana	Warrick	4	11,698	296	272	0	10,422	11,698	295	272	10,490
Indiana	Whitewater Valley	1	2,557	65	0	0	2,218	2,557	65	0	2,233
Indiana	Whitewater Valley	2	7,650	194	0	0	6,638	7,650	193	0	6,682
Iowa	Ames	7	460	12	0	0	400	460	12	0	401
Iowa	Ames	8	2,095	53	0	0	1,818	2,095	53	0	1,830
Iowa	Burlington	1	5,141	130	0	0	4,461	5,141	130	0	4,490
Iowa	Council Bluffs	1	745	19	0	456	1,104	745	19	0	651
Iowa	Council Bluffs	2	1,059	27	0	724	1,643	1,059	27	0	925
Iowa	Council Bluffs	3	18,234	462	0	0	15,822	18,234	460	0	15,927
Iowa	Des Moines	10	187	5	0	0	162	187	5	0	163
Iowa	Des Moines	11	279	7	0	0	242	279	7	0	244
Iowa	Des Moines	**5	0	0	0	0	0	0	0	0	0
Iowa	Dubuque	1	1,279	32	0	0	1,111	1,279	32	0	1,117
Iowa	Dubuque	5	349	9	0	0	302	349	9	0	305
Iowa	Earl F Wisdom	1	433	11	0	0	376	433	11	0	378
Iowa	Fair Station	2	6,370	161	0	0	5,528	6,370	161	0	5,564
Iowa	George Neal	1	2,640	67	0	0	2,291	2,640	67	0	2,306
Iowa	George Neal	2	5,025	127	0	4,685	9,046	5,025	127	0	4,389
Iowa	George Neal	3	9,760	247	0	3,755	12,224	9,760	246	0	8,525
Iowa	George Neal	4	17,305	438	0	0	15,015	17,305	437	0	15,115
Iowa	Graettinger	**5	11	0	0	0	10	11	0	0	10
Iowa	Grinnell	**2	217	6	0	0	188	217	5	0	190
Iowa	Lansing	3	547	14	0	0	474	547	14	0	478
Iowa	Lansing	4	4,956	125	0	292	4,593	4,956	125	0	4,329
Iowa	Lime Creek	**1	291	7	0	0	253	291	7	0	255
Iowa	Lime Creek	**2	291	7	0	0	253	291	7	0	255
Iowa	Louisa	101	17,617	451	0	0	15,460	17,617	450	0	15,562

TABLE 2. -- PHASE II ALLOWANCE ALLOCATIONS

State	Plant Name	Boiler [1]	Allowances for years 2000–2009					Allowances for years 2010 and thereafter			
			(A) [2] Unadjusted basic	(B) Special allowance reserve deduction	(C) Additional basic (§405(a)(3))	(D) Total Bonus	(E) [3] Total annual phase II	(F) [2] Unadjusted basic	(G) Special allowance reserve deduction	(H) Additional basic (§ 405(a)(3))	(I) [4] Total annual phase II
Iowa	Maynard Station	1	35	1	0	0	31	35	1	0	30
Iowa	Milton L Kapp	2	6,622	166	0	0	5,745	6,622	167	0	5,784
Iowa	Muscatine	8	1,556	39	0	0	1,350	1,556	39	0	1,359
Iowa	Muscatine	9	2,316	59	0	0	2,009	2,316	58	0	2,023
Iowa	Na 1 -- 7230	**2	0	0	0	0	0	0	0	0	0
Iowa	Ottumwa	1	21,819	552	0	0	18,934	21,819	551	0	19,058
Iowa	Pella	6	865	22	0	0	750	865	22	0	756
Iowa	Pella	7	1,116	28	0	0	969	1,116	28	0	975
Iowa	Pella	8	31	1	0	41	68	31	1	0	28
Iowa	Prairie Creek	3	829	21	0	0	719	829	21	0	724
Iowa	Prairie Creek	4	3,924	99	0	0	3,405	3,924	99	0	3,426
Iowa	Riverside	9	1,994	50	0	0	1,731	1,994	50	0	1,742
Iowa	Sixth Street	1	930	24	0	0	807	930	24	0	811
Iowa	Sixth Street	2	201	6	0	0	177	201	6	0	175
Iowa	Sixth Street	3	177	6	0	0	154	177	6	0	154
Iowa	Sixth Street	4	85	1	0	0	77	85	1	0	74
Iowa	Sixth Street	5	352	10	0	0	307	352	10	0	308
Iowa	Streeter Station	7	633	16	0	0	549	633	16	0	553
Iowa	Sutherland	1	228	6	0	0	197	228	6	0	199
Iowa	Sutherland	2	429	11	0	0	373	429	11	0	375
Iowa	Sutherland	3	2,505	63	0	0	2,173	2,505	63	0	2,188
Kansas	Arthur Mullergren	3	0	0	0	1	1	1	0	0	1
Kansas	Cimarron River	1	0	0	0	12	12	12	0	0	11
Kansas	Coffeyville	4	1	0	0	10	11	11	0	0	10
Kansas	East 12Th St	4	1	0	0	9	10	9	0	0	8
Kansas	Garden City	S-2	0	0	0	0	0	0	0	0	0
Kansas	Gordon Evans	1	1	0	0	63	64	64	2	0	56
Kansas	Gordon Evans	2	1	0	0	24	25	24	1	0	21
Kansas	Holcomb	SGU1	4,583	116	0	0	3,977	4,583	116	0	4,003
Kansas	Hutchinson	1	0	0	0	0	0	0	0	0	0
Kansas	Hutchinson	2	0	0	0	0	0	0	0	0	0
Kansas	Hutchinson	3	0	0	0	0	0	0	0	0	0
Kansas	Hutchinson	4	0	0	0	18	18	18	0	0	16
Kansas	Jeffrey Energy Centr	1	19,555	495	0	0	18,989	19,555	494	0	17,080
Kansas	Jeffrey Energy Centr	2	20,668	523	0	0	17,934	20,668	522	0	18,053
Kansas	Jeffrey Energy Centr	3	23,580	597	0	0	20,460	23,580	595	0	20,587
Kansas	Judson Large	4	1	0	0	38	39	39	1	0	34
Kansas	Kaw	1	900	23	0	0	780	900	23	0	786
Kansas	Kaw	2	707	18	0	0	613	707	18	0	617
Kansas	Kaw	3	590	15	0	0	512	590	15	0	515
Kansas	Kingman	**9	58	1	0	0	51	58	1	0	51
Kansas	La Cygne	1	16,432	416	0	3,566	17,624	16,432	415	0	14,353
Kansas	La Cygne	2	17,210	436	0	0	14,933	17,210	434	0	15,033
Kansas	Lawrence	2	2	0	0	0	2	2	0	0	2
Kansas	Lawrence	3	713	18	0	1,524	2,143	713	18	0	623
Kansas	Lawrence	4	1,081	27	0	672	1,811	1,081	27	0	945
Kansas	Lawrence	5	4,279	108	0	1,633	5,346	4,279	108	0	3,738

TABLE 2. — PHASE II ALLOWANCE ALLOCATIONS

State	Plant Name	Boiler [1]	Allowances for years 2000–2009					Allowances for years 2010 and thereafter			
			(A) [2] Unadjusted basic	(B) Special allowance reserve deduction	(C) Additional basic (§405(a)(3))	(D) Total Bonus	(E) [3] Total annual phase II	(F) [2] Unadjusted basic	(G) Special allowance reserve deduction	(H) Additional basic (§ 405(a)(3))	(I) [4] Total annual phase II
Kansas	Mcpherson 2	1	1	0	0	0	1	1	0	0	1
Kansas	Mulvane	**7	6	0	0	0	5	6	0	0	5
Kansas	Mulvane	**8	6	0	0	0	5	6	0	0	5
Kansas	Murray Gill	1	0	0	0	1	1	1	0	0	1
Kansas	Murray Gill	2	0	0	0	5	5	5	0	0	4
Kansas	Murray Gill	3	1	0	0	49	50	50	1	0	44
Kansas	Murray Gill	4	1	0	0	61	62	62	2	0	54
Kansas	Nearman Creek	N1	7,919	200	0	0	6,872	7,919	200	0	6,917
Kansas	Neosho	7	14	0	0	0	13	14	0	0	13
Kansas	Quindaro	1	2,322	59	0	0	2,014	2,322	59	0	2,028
Kansas	Quindaro	2	2,375	60	0	0	2,061	2,375	60	0	2,074
Kansas	Ripley	**2	0	0	0	0	0	0	0	0	0
Kansas	Ripley	**3	0	0	0	0	0	0	0	0	0
Kansas	Riverton	39	1,187	30	0	0	1,030	1,187	30	0	1,037
Kansas	Riverton	40	2,015	51	0	0	1,749	2,015	51	0	1,760
Kansas	Russell	**11	35	1	0	0	31	35	1	0	30
Kansas	Russell	**12	34	1	0	0	30	34	1	0	30
Kansas	Tecumseh	9	1,051	27	0	1,336	2,248	1,051	27	0	918
Kansas	Tecumseh	10	1,677	42	0	2,449	3,905	1,677	42	0	1,465
Kentucky	Big Sandy	BSU1	7,347	186	0	0	6,376	7,347	185	0	6,416
Kentucky	Big Sandy	BSU2	21,199	537	0	1,187	19,562	21,199	535	0	18,517
Kentucky	Cane Run	3	44	1	0	0	39	44	1	0	39
Kentucky	Cane Run	4	3,110	79	0	1,800	4,499	3,110	79	0	2,716
Kentucky	Cane Run	5	4,939	125	0	18	4,304	4,939	125	0	4,314
Kentucky	Cane Run	6	6,201	157	0	73	5,454	6,201	157	0	5,416
Kentucky	Cane Run	**12	0	0	0	0	0	0	0	0	0
Kentucky	Cane Run	**13	0	0	0	0	0	0	0	0	0
Kentucky	Coleman	C1	5,402	137	126	0	4,814	5,402	136	126	4,845
Kentucky	Coleman	C2	6,162	156	143	0	5,490	6,162	156	143	5,525
Kentucky	Coleman	C3	5,925	150	138	0	5,279	5,925	150	138	5,313
Kentucky	Cooper	1	3,574	90	83	0	3,185	3,574	90	83	3,205
Kentucky	Cooper	2	7,355	186	171	0	6,554	7,355	186	171	6,595
Kentucky	D B Wilson	W1	14,244	361	0	0	12,360	14,244	360	0	12,441
Kentucky	Dale	3	1,931	49	0	294	1,969	1,931	49	0	1,886
Kentucky	Dale	4	1,596	40	0	451	1,836	1,596	40	0	1,394
Kentucky	E W Brown	1	3,413	86	79	0	3,042	3,413	86	79	3,060
Kentucky	E W Brown	2	6,465	164	150	0	5,759	6,465	163	150	5,797
Kentucky	E W Brown	3	12,526	317	292	0	11,162	12,526	316	292	11,233
Kentucky	East Bend	2	20,936	530	0	0	18,166	20,936	529	0	18,266
Kentucky	Elmer Smith	1	3,122	79	73	0	2,782	3,122	79	73	2,800
Kentucky	Elmer Smith	2	6,916	175	161	0	6,162	6,916	175	161	6,201
Kentucky	Ghent	1	13,638	345	317	0	12,152	13,638	344	317	12,230
Kentucky	Ghent	2	11,450	290	0	2,717	12,652	11,450	289	0	10,001
Kentucky	Ghent	3	15,953	404	0	0	13,843	15,953	403	0	13,934
Kentucky	Ghent	4	15,875	397	0	0	13,601	15,875	396	0	13,691
Kentucky	Green River	1	2	0	0	128	130	2	0	0	2
Kentucky	Green River	2	17	0	0	835	851	17	0	0	15

TABLE 2. -- PHASE II ALLOWANCE ALLOCATIONS

State	Plant Name	Boiler [1]	Allowances for years 2000–2009					Allowances for years 2010 and thereafter			
			(A) [2] Unadjusted basic	(B) Special allowance reserve deduction	(C) Additional basic (§405(a)(3))	(D) Total Bonus	(E) [3] Total annual phase II	(F) [2] Unadjusted basic	(G) Special allowance reserve deduction	(H) Additional basic (§ 405(a)(3))	(I) [4] Total annual phase II
Kentucky	Green River	3	14	0	0	731	744	14	0	0	13
Kentucky	Green River	4	3,229	82	0	0	2,802	3,229	82	0	2,820
Kentucky	Green River	5	3,753	95	87	0	3,344	3,753	95	87	3,365
Kentucky	H L Spurlock	1	10,935	277	255	0	9,744	10,935	276	255	9,806
Kentucky	H L Spurlock	2	18,959	460	0	0	16,451	18,959	479	0	16,560
Kentucky	Henderson I	6	926	23	0	0	803	926	23	0	809
Kentucky	Hmp&L Station 2	H1	6,410	162	149	0	5,712	6,410	162	149	5,748
Kentucky	Hmp&L Station 2	H2	6,607	167	154	0	5,888	6,607	167	154	5,925
Kentucky	J K Smith	1	0	0	0	0	0	0	0	0	0
Kentucky	Mill Creek	1	8,778	222	0	401	8,018	8,778	222	0	7,867
Kentucky	Mill Creek	2	8,960	227	0	300	8,075	8,960	226	0	7,828
Kentucky	Mill Creek	3	12,549	318	0	0	10,868	12,549	317	0	10,981
Kentucky	Mill Creek	4	15,565	394	0	0	13,506	15,565	393	0	13,595
Kentucky	Na 1 -- 7220	**3	0	0	0	0	0	0	0	0	0
Kentucky	Na 1 -- 7220	**4	0	0	0	0	0	0	0	0	0
Kentucky	Na 1 -- 7220	**5	0	0	0	0	0	0	0	0	0
Kentucky	Paradise	1	12,366	313	0	0	10,729	12,366	312	0	10,801
Kentucky	Paradise	2	14,060	356	0	0	12,200	14,060	355	0	12,261
Kentucky	Paradise	3	28,401	720	661	0	25,302	28,401	717	661	25,468
Kentucky	Pineville	3	483	12	0	491	911	483	12	0	422
Kentucky	R D Green	G1	6,049	153	0	0	5,249	6,049	153	0	5,283
Kentucky	R D Green	G2	7,288	184	0	0	6,324	7,288	184	0	6,366
Kentucky	Robert Reid	R1	1,076	27	0	0	935	1,076	27	0	940
Kentucky	Shawnee	1	2,991	76	0	1,026	3,621	2,991	76	0	2,812
Kentucky	Shawnee	2	3,082	78	0	975	3,649	3,082	78	0	2,892
Kentucky	Shawnee	3	3,471	88	0	671	3,682	3,471	88	0	3,031
Kentucky	Shawnee	4	3,450	87	0	578	3,571	3,450	87	0	3,014
Kentucky	Shawnee	5	3,369	85	0	878	3,802	3,369	85	0	2,943
Kentucky	Shawnee	6	3,699	94	0	475	3,684	3,699	93	0	3,231
Kentucky	Shawnee	7	4,085	103	0	65	3,610	4,085	103	0	3,568
Kentucky	Shawnee	8	3,909	99	0	150	3,542	3,909	99	0	3,414
Kentucky	Shawnee	9	4,189	106	0	0	3,635	4,189	106	0	3,659
Kentucky	Shawnee	10	5,448	138	127	0	4,653	5,448	138	127	4,865
Kentucky	Trimble County	1	11,009	279	0	0	9,553	11,009	278	0	9,616
Kentucky	Tyrone	1	0	0	0	0	0	0	0	0	0
Kentucky	Tyrone	2	0	0	0	0	0	0	0	0	0
Kentucky	Tyrone	3	0	0	0	0	0	0	0	0	0
Kentucky	Tyrone	4	0	0	0	0	0	0	0	0	0
Kentucky	Tyrone	5	771	20	0	1,036	1,707	771	19	0	674
Louisiana	A B Paterson	3	0	0	0	7	7	4	0	0	4
Louisiana	A B Paterson	4	0	0	0	6	6	7	0	0	6
Louisiana	Arsenal Hill	5A	0	0	0	30	30	21	1	0	18
Louisiana	Big Cajun 1	1B1	6	0	0	20	27	42	1	0	37
Louisiana	Big Cajun 1	1B2	6	0	0	20	27	39	1	0	34
Louisiana	Big Cajun 2	2B1	16,337	414	0	571	14,748	16,337	412	0	14,270
Louisiana	Big Cajun 2	2B2	16,132	408	0	522	14,520	16,132	407	0	14,091
Louisiana	Big Cajun 2	2B3	16,091	407	0	575	14,538	16,091	406	0	14,055

TABLE 2. -- PHASE II ALLOWANCE ALLOCATIONS

State	Plant Name	Boiler [1]	Allowances for years 2000–2009					Allowances for years 2010 and thereafter			
			(A) [2] Unadjusted basic	(B) Special allowance reserve deduction	(C) Additional basic (§405(a)(3))	(D) Total Bonus	(E) [3] Total annual phase II	(F) [2] Unadjusted basic	(G) Special allowance reserve deduction	(H) Additional basic (§ 405(a)(3))	(I) [4] Total annual phase II
Louisiana	Coughlin	6	0	0	0	46	46	39	1	0	34
Louisiana	Coughlin	7	2	0	0	126	128	159	4	0	139
Louisiana	D G Hunter	3	0	0	0	0	0	10	0	0	9
Louisiana	D G Hunter	4	1	0	0	31	32	26	1	0	24
Louisiana	Doc Bonin	1	4	0	0	8	12	19	0	0	17
Louisiana	Doc Bonin	2	1	0	0	23	24	34	1	0	30
Louisiana	Doc Bonin	3	1	0	0	44	45	102	3	0	89
Louisiana	Dolet Hills	1	23,424	593	0	3	20,327	23,424	591	0	20,460
Louisiana	Houma	15	1	0	0	9	10	16	0	0	14
Louisiana	Houma	16	0	0	0	14	14	32	1	0	28
Louisiana	Lieberman	3	2	0	0	84	86	96	2	0	84
Louisiana	Lieberman	4	1	0	0	71	72	72	2	0	63
Louisiana	Little Gypsy	1	47	1	0	203	244	254	6	0	222
Louisiana	Little Gypsy	2	77	2	0	310	377	400	10	0	349
Louisiana	Little Gypsy	3	102	3	0	454	542	540	14	0	471
Louisiana	Louisiana 1	1A	2	0	0	114	116	19	0	0	17
Louisiana	Louisiana 1	2A	2	0	0	0	2	19	0	0	17
Louisiana	Louisiana 1	3A	2	0	0	0	2	19	0	0	17
Louisiana	Louisiana 2	10	0	0	0	0	0	0	0	0	0
Louisiana	Louisiana 2	11	0	0	0	0	0	0	0	0	0
Louisiana	Louisiana 2	12	0	0	0	0	0	0	0	0	0
Louisiana	Michoud	1	2	0	0	69	71	94	2	0	82
Louisiana	Michoud	2	2	0	0	104	106	157	4	0	137
Louisiana	Michoud	3	52	1	0	445	491	532	13	0	465
Louisiana	Monroe	11	2	0	0	11	13	13	0	0	12
Louisiana	Monroe	12	7	0	0	39	45	43	1	0	38
Louisiana	Morgan City	4	1	0	0	4	5	6	0	0	5
Louisiana	Natchitoches	10	0	0	0	0	0	0	0	0	0
Louisiana	Nineemile Point	1	25	1	0	39	61	74	2	0	65
Louisiana	Nineemile Point	2	30	1	0	86	112	118	3	0	103
Louisiana	Nineemile Point	3	27	1	0	73	96	99	3	0	86
Louisiana	Nineemile Point	4	134	3	0	573	690	697	18	0	608
Louisiana	Nineemile Point	5	173	4	0	778	926	925	23	0	808
Louisiana	Opelousas	10	1	0	0	0	1	1	0	0	1
Louisiana	R S Nelson	1	2	0	0	28	30	39	1	0	34
Louisiana	R S Nelson	2	1	0	0	32	33	37	1	0	32
Louisiana	R S Nelson	3	1	0	0	38	39	30	1	0	26
Louisiana	R S Nelson	4	5	0	0	118	123	318	8	0	278
Louisiana	R S Nelson	6	21,332	540	0	900	19,410	21,332	539	0	18,632
Louisiana	Rodemacher	1	3,394	86	0	277	3,222	3,394	86	0	2,964
Louisiana	Rodemacher	2	18,462	467	0	728	18,749	18,462	466	0	18,128
Louisiana	Ruston	2	1	0	0	3	4	7	0	0	6
Louisiana	Ruston	3	0	0	0	5	5	26	1	0	22
Louisiana	Sterlington	10	43	1	0	130	174	178	4	0	156
Louisiana	Sterlington	7AB	15	0	0	58	72	82	2	0	72
Louisiana	Teche	2	0	0	0	27	27	25	1	0	21
Louisiana	Teche	3	5	0	0	441	446	420	11	0	366

TABLE 2. -- PHASE II ALLOWANCE ALLOCATIONS

State	Plant Name	Boiler [1]	Allowances for years 2000–2009					Allowances for years 2010 and thereafter			
			(A) [2] Unadjusted basic	(B) Special allowance reserve deduction	(C) Additional basic (§405(a)(3))	(D) Total Bonus	(E) [3] Total annual phase II	(F) [2] Unadjusted basic	(G) Special allowance reserve deduction	(H) Additional basic (§ 405(a)(3))	(I) [4] Total annual phase II
Louisiana	Waterford 1 & 2	1	4,869	123	0	293	4,518	4,869	123	0	4,253
Louisiana	Waterford 1 & 2	2	3,780	96	0	228	3,508	3,780	95	0	3,302
Louisiana	Willow Glen	1	2	0	0	97	99	100	3	0	87
Louisiana	Willow Glen	2	0	0	0	25	25	23	1	0	20
Louisiana	Willow Glen	3	0	0	0	93	93	37	1	0	32
Louisiana	Willow Glen	4	4	0	0	286	290	337	9	0	294
Louisiana	Willow Glen	5	28	1	0	436	456	499	13	0	435
Maine	Graham Station	5	393	10	0	0	341	393	10	0	343
Maine	Mason Steam	3	2	0	0	0	2	2	0	0	2
Maine	Mason Steam	4	1	0	0	0	1	1	0	0	1
Maine	Mason Steam	5	1	0	0	0	1	1	0	0	1
Maine	William F Wyman	1	532	13	0	694	1,155	532	13	0	465
Maine	William F Wyman	2	626	16	0	613	1,158	626	16	0	547
Maine	William F Wyman	3	3,072	78	0	257	2,922	3,072	78	0	2,683
Maine	William F Wyman	4	7,169	181	0	0	6,221	7,169	181	0	6,262
Maryland	Brandon Shores	1	21,151	535	0	0	18,354	21,151	534	0	18,475
Maryland	Brandon Shores	2	8,907	225	0	0	7,729	8,907	225	0	7,780
Maryland	C P Crane	1	4,969	126	0	0	4,312	4,969	125	0	4,341
Maryland	C P Crane	2	4,619	117	0	0	4,008	4,619	117	0	4,034
Maryland	Chalk Point	1	10,515	266	0	0	9,124	10,515	265	0	9,185
Maryland	Chalk Point	2	11,677	296	0	0	10,132	11,677	295	0	10,199
Maryland	Chalk Point	3	5,965	151	0	7,282	12,458	5,965	151	0	5,210
Maryland	Chalk Point	4	2,971	75	0	0	2,578	2,971	75	0	2,595
Maryland	Chalk Point	**GT3	808	20	0	0	702	808	20	0	706
Maryland	Chalk Point	**GT4	808	20	0	0	702	808	20	0	706
Maryland	Chalk Point	**GT5	1,022	26	0	0	887	1,022	26	0	892
Maryland	Chalk Point	**GT6	1,022	26	0	0	887	1,022	26	0	892
Maryland	Coal Gas Cc 1	**CT1	1,236	31	0	0	1,073	1,236	31	0	1,080
Maryland	Coal Gas Cc 1	**CW1	0	0	0	0	0	0	0	0	0
Maryland	Coal Gas Cc 2	**CT3	0	0	0	0	0	0	0	0	0
Maryland	Coal Gas Cc 2	**CT4	0	0	0	0	0	0	0	0	0
Maryland	Dickerson	1	6,683	169	0	0	5,799	6,683	169	0	5,837
Maryland	Dickerson	2	6,285	159	0	0	5,454	6,285	159	0	5,469
Maryland	Dickerson	3	6,680	169	0	0	5,797	6,680	169	0	5,834
Maryland	Easton 2	**26	0	0	0	0	0	0	0	0	0
Maryland	Easton 2	**27	0	0	0	0	0	0	0	0	0
Maryland	Gould Street	3	939	24	0	0	814	939	24	0	820
Maryland	Herbert A Wagner	1	1,474	37	0	0	1,280	1,474	37	0	1,288
Maryland	Herbert A Wagner	2	1,485	38	0	0	1,287	1,485	38	0	1,297
Maryland	Herbert A Wagner	3	9,577	242	0	0	8,311	9,577	242	0	8,365
Maryland	Herbert A Wagner	4	1,737	44	0	0	1,507	1,737	44	0	1,517
Maryland	Morgantown	1	19,348	490	0	0	16,788	19,348	488	0	16,900
Maryland	Morgantown	2	18,498	468	0	0	16,051	18,498	467	0	16,157
Maryland	Nanticoke	**ST1	0	0	0	0	0	0	0	0	0
Maryland	Perryman	**52	0	0	0	0	0	0	0	0	0
Maryland	Perryman	**61	0	0	0	0	0	0	0	0	0
Maryland	Perryman	**62	0	0	0	0	0	0	0	0	0

TABLE 2. -- PHASE II ALLOWANCE ALLOCATIONS

State	Plant Name	Boiler [1]	Allowances for years 2000–2009					Allowances for years 2010 and thereafter			
			(A) [2] Unadjusted basic	(B) Special allowance reserve deduction	(C) Additional basic (§405(a)(3))	(D) Total Bonus	(E) [3] Total annual phase II	(F) [2] Unadjusted basic	(G) Special allowance reserve deduction	(H) Additional basic (§ 405(a)(3))	(I) [4] Total annual phase II
Maryland	R P Smith	9	386	10	0	0	335	386	10	0	337
Maryland	R P Smith	11	2,592	66	0	46	2,295	2,592	65	0	2,264
Maryland	Riverside	1	216	5	0	0	168	216	5	0	169
Maryland	Riverside	2	196	5	0	0	170	196	5	0	171
Maryland	Riverside	3	404	10	0	0	351	404	10	0	353
Maryland	Riverside	4	520	13	0	0	451	520	13	0	454
Maryland	Riverside	5	337	9	0	0	292	337	9	0	294
Maryland	Vienna	8	2,075	53	0	1,829	3,629	2,075	52	0	1,813
Maryland	Westport	3	213	5	0	0	185	213	5	0	186
Maryland	Westport	4	295	7	0	0	257	295	7	0	258
Massachusetts	Brayton Point	1	9,692	245	0	0	8,411	9,692	245	0	8,465
Massachusetts	Brayton Point	2	10,182	258	0	0	8,834	10,182	257	0	8,894
Massachusetts	Brayton Point	3	21,283	539	0	0	18,467	21,283	537	0	18,590
Massachusetts	Brayton Point	4	13,256	336	0	538	12,040	13,256	335	0	11,578
Massachusetts	Canal	1	14,061	356	0	930	13,131	14,061	355	0	12,282
Massachusetts	Canal	2	20,568	521	0	0	17,847	20,568	519	0	17,966
Massachusetts	Cannon Street	3	427	11	0	0	371	427	11	0	373
Massachusetts	Cleary Flood	8	163	4	0	0	142	163	4	0	142
Massachusetts	Cleary Flood	9	1,799	46	0	1,105	2,866	1,799	45	0	1,572
Massachusetts	Kendall Square	1	225	5	0	0	196	225	5	0	197
Massachusetts	Kendall Square	2	237	5	0	0	206	237	5	0	208
Massachusetts	Kendall Square	3	481	12	0	0	418	481	12	0	420
Massachusetts	Mount Tom	1	6,412	162	0	0	5,565	6,412	162	0	5,601
Massachusetts	Mystic	4	2,979	75	0	0	2,585	2,979	75	0	2,602
Massachusetts	Mystic	5	3,534	89	0	0	3,067	3,534	89	0	3,087
Massachusetts	Mystic	6	3,515	89	0	0	3,049	3,515	89	0	3,070
Massachusetts	Mystic	7	19,704	499	0	0	17,097	19,704	497	0	17,211
Massachusetts	New Boston	1	7,037	178	0	0	6,106	7,037	178	0	6,146
Massachusetts	New Boston	2	7,226	183	0	0	6,270	7,226	182	0	6,312
Massachusetts	Salem Harbor	1	3,816	97	0	0	3,311	3,816	96	0	3,333
Massachusetts	Salem Harbor	2	3,895	99	0	0	3,379	3,895	98	0	3,402
Massachusetts	Salem Harbor	3	6,240	158	0	0	5,414	6,240	158	0	5,450
Massachusetts	Salem Harbor	4	14,083	356	0	246	12,467	14,083	356	0	12,301
Massachusetts	Somerset	1	0	0	0	0	0	0	0	0	0
Massachusetts	Somerset	2	0	0	0	0	0	0	0	0	0
Massachusetts	Somerset	3	0	0	0	0	0	0	0	0	0
Massachusetts	Somerset	4	0	0	0	0	0	0	0	0	0
Massachusetts	Somerset	5	0	0	0	0	0	0	0	0	0
Massachusetts	Somerset	6	0	0	0	0	0	0	0	0	0
Massachusetts	Somerset	7	3,160	80	0	0	2,742	3,160	80	0	2,760
Massachusetts	Somerset	8	4,554	115	0	0	3,952	4,554	115	0	3,979
Massachusetts	Waters River	**2	282	7	0	0	245	282	7	0	246
Massachusetts	West Springfield	1	432	11	0	0	375	432	11	0	377
Massachusetts	West Springfield	2	406	10	0	0	353	406	10	0	355
Massachusetts	West Springfield	3	3,441	87	0	0	2,987	3,441	87	0	3,005
Michigan	B C Cobb	1	504	13	0	701	1,136	504	13	0	440
Michigan	B C Cobb	2	542	13	0	755	1,225	542	13	0	474

TABLE 2. -- PHASE II ALLOWANCE ALLOCATIONS

State	Plant Name	Boiler [1]	Allowances for years 2000–2009					Allowances for years 2010 and thereafter			
			(A) [2] Unadjusted basic	(B) Special allowance reserve deduction	(C) Additional basic (§405(a)(3))	(D) Total Bonus	(E) [3] Total annual phase II	(F) [2] Unadjusted basic	(G) Special allowance reserve deduction	(H) Additional basic (§ 405(a)(3))	(I) [4] Total annual phase II
Michigan	B C Cobb	3	539	13	0	752	1,218	539	13	0	472
Michigan	B C Cobb	4	5,226	132	0	0	4,535	5,226	132	0	4,565
Michigan	B C Cobb	5	5,364	136	0	0	4,655	5,364	135	0	4,686
Michigan	Belle River	1	21,145	535	0	0	18,348	21,145	534	0	18,469
Michigan	Belle River	2	21,446	543	0	0	18,609	21,446	541	0	18,733
Michigan	Conners Creek	15	672	17	0	3,698	4,281	672	17	0	587
Michigan	Conners Creek	16	662	17	0	3,700	4,275	662	17	0	578
Michigan	Conners Creek	17	631	15	0	3,482	4,031	631	15	0	552
Michigan	Conners Creek	18	512	13	0	2,905	3,348	512	13	0	447
Michigan	Dan E Karn	1	8,926	226	0	0	7,745	8,926	225	0	7,797
Michigan	Dan E Karn	2	9,789	248	0	0	8,493	9,789	247	0	8,550
Michigan	Dan E Karn	3	1,167	30	0	0	1,012	1,167	29	0	1,020
Michigan	Dan E Karn	4	1,082	27	0	0	940	1,082	27	0	945
Michigan	Delray	7	0	0	0	0	0	0	0	0	0
Michigan	Delray	8	0	0	0	12	12	14	0	0	12
Michigan	Delray	9	0	0	0	0	0	0	0	0	0
Michigan	Delray	10	0	0	0	14	14	16	0	0	14
Michigan	Delray	11	0	0	0	0	0	0	0	0	0
Michigan	Delray	12	0	0	0	14	14	14	0	0	12
Michigan	Eckert Station	1	1,341	34	0	124	1,287	1,341	34	0	1,171
Michigan	Eckert Station	2	1,397	35	0	131	1,344	1,397	35	0	1,221
Michigan	Eckert Station	3	1,273	32	0	213	1,316	1,273	32	0	1,112
Michigan	Eckert Station	4	2,540	64	0	0	2,204	2,540	64	0	2,219
Michigan	Eckert Station	5	3,046	77	0	0	2,644	3,046	77	0	2,660
Michigan	Eckert Station	6	2,677	68	0	0	2,322	2,677	68	0	2,338
Michigan	Endicott Generating	1	2,069	52	0	0	1,796	2,069	52	0	1,807
Michigan	Erickson	1	7,595	192	0	0	6,591	7,595	192	0	6,634
Michigan	Greenwood	1	617	16	0	0	535	617	16	0	538
Michigan	Harbor Beach	1	1,627	41	0	2,096	3,508	1,627	41	0	1,421
Michigan	J B Sims	3	1,696	43	0	0	1,471	1,696	43	0	1,481
Michigan	J C Weadock	7	5,423	137	0	0	4,707	5,423	137	0	4,737
Michigan	J C Weadock	8	5,360	136	0	0	4,651	5,360	135	0	4,682
Michigan	J H Campbell	1	9,254	234	0	0	8,030	9,254	234	0	8,083
Michigan	J H Campbell	2	11,067	280	0	0	9,603	11,067	279	0	9,667
Michigan	J H Campbell	3	31,405	796	0	0	27,247	31,405	794	0	27,431
Michigan	J R Whiting	1	3,899	99	0	0	3,383	3,899	98	0	3,408
Michigan	J R Whiting	2	3,992	101	0	0	3,464	3,992	101	0	3,487
Michigan	J R Whiting	3	5,107	129	0	0	4,431	5,107	129	0	4,461
Michigan	James De Young	5	1,197	30	0	0	1,039	1,197	30	0	1,046
Michigan	Marysville	9	640	16	0	1,076	1,631	640	16	0	560
Michigan	Marysville	10	493	13	0	831	1,256	493	13	0	430
Michigan	Marysville	11	514	13	0	866	1,311	514	13	0	448
Michigan	Marysville	12	414	11	0	698	1,056	414	11	0	360
Michigan	Mistersky	5	293	7	0	0	255	293	7	0	256
Michigan	Mistersky	6	500	13	0	0	433	500	13	0	436
Michigan	Mistersky	7	555	14	0	0	481	555	14	0	485
Michigan	Monroe	1	27,243	690	0	0	23,636	27,243	688	0	23,796

TABLE 2. -- PHASE II ALLOWANCE ALLOCATIONS

State	Plant Name	Boiler [1]	Allowances for years 2000–2009					Allowances for years 2010 and thereafter			
			(A) [2] Unadjusted basic	(B) Special allowance reserve deduction	(C) Additional basic (§405(a)(3))	(D) Total Bonus	(E) [3] Total annual phase II	(F) [2] Unadjusted basic	(G) Special allowance reserve deduction	(H) Additional basic (§ 405(a)(3))	(I) [4] Total annual phase II
Michigan	Monroe	2	28,273	716	0	0	24,531	28,273	714	0	24,695
Michigan	Monroe	3	26,466	670	0	0	22,963	26,466	668	0	23,117
Michigan	Monroe	4	29,065	737	0	0	25,216	29,065	735	0	25,368
Michigan	Presque Isle	2	280	7	0	392	635	280	7	0	245
Michigan	Presque Isle	3	2,179	55	0	0	1,891	2,179	55	0	1,903
Michigan	Presque Isle	4	1,908	48	0	7	1,662	1,908	48	0	1,667
Michigan	Presque Isle	5	3,352	85	0	0	2,909	3,352	85	0	2,927
Michigan	Presque Isle	6	3,360	85	0	0	2,916	3,360	85	0	2,935
Michigan	Presque Isle	7	2,479	63	0	47	2,197	2,479	63	0	2,165
Michigan	Presque Isle	8	2,338	59	0	145	2,174	2,338	59	0	2,042
Michigan	Presque Isle	9	1,724	44	0	637	2,333	1,724	44	0	1,505
Michigan	River Rouge	1	90	2	0	0	79	90	2	0	79
Michigan	River Rouge	2	7,075	179	0	132	6,271	7,075	179	0	6,179
Michigan	River Rouge	3	10,402	263	0	0	9,026	10,402	263	0	9,085
Michigan	Shiras	3	572	14	0	0	498	572	14	0	500
Michigan	St Clair	1	4,189	106	0	0	3,635	4,189	106	0	3,659
Michigan	St Clair	2	4,049	103	0	0	3,513	4,049	102	0	3,537
Michigan	St Clair	3	4,027	102	0	0	3,495	4,027	102	0	3,517
Michigan	St Clair	4	3,880	98	0	0	3,366	3,880	98	0	3,388
Michigan	St Clair	5	0	0	0	0	0	0	0	0	0
Michigan	St Clair	6	8,390	212	0	0	7,281	8,390	212	0	7,326
Michigan	St Clair	7	15,379	389	0	0	13,344	15,379	388	0	13,433
Michigan	Trenton Channel	16	2,619	66	0	1,000	3,272	2,619	66	0	2,288
Michigan	Trenton Channel	17	610	16	0	233	761	610	16	0	532
Michigan	Trenton Channel	18	2,835	72	0	1,082	3,543	2,835	71	0	2,477
Michigan	Trenton Channel	19	556	14	0	212	696	556	14	0	486
Michigan	Trenton Channel	9A	16,577	420	0	0	14,364	16,577	418	0	14,480
Michigan	Wyandotte	5	625	15	0	412	955	625	15	0	546
Michigan	Wyandotte	7	621	15	0	409	949	621	15	0	543
Michigan	491 E. 48Th Street	**7	341	9	0	0	295	341	9	0	297
Michigan	491 E. 48Th Street	**8	341	9	0	0	295	341	9	0	297
Minnesota	Allen S King	1	17,857	452	0	0	15,495	17,857	451	0	15,587
Minnesota	Black Dog	1	378	10	0	1,583	1,911	378	10	0	330
Minnesota	Black Dog	2	522	13	0	3,226	3,678	522	13	0	456
Minnesota	Black Dog	3	1,129	29	0	1,287	2,266	1,129	29	0	986
Minnesota	Black Dog	4	2,430	62	0	1,929	4,036	2,430	61	0	2,123
Minnesota	Clay Boswell	1	1,424	36	0	580	1,816	1,424	36	0	1,244
Minnesota	Clay Boswell	2	1,355	34	0	614	1,760	1,355	34	0	1,184
Minnesota	Clay Boswell	3	11,273	285	0	0	9,782	11,273	285	0	9,846
Minnesota	Clay Boswell	4	11,797	299	0	0	10,236	11,797	296	0	10,304
Minnesota	Fox Lake	3	1,218	31	0	1,003	2,060	1,218	31	0	1,064
Minnesota	Future Base	**1	0	0	0	0	0	0	0	0	0
Minnesota	High Bridge	3	907	23	0	1,324	2,110	907	23	0	762
Minnesota	High Bridge	4	701	18	0	845	1,453	701	18	0	612
Minnesota	High Bridge	5	1,240	31	0	1,109	2,185	1,240	31	0	1,083
Minnesota	High Bridge	6	2,116	54	0	0	1,836	2,116	53	0	1,848
Minnesota	Hoot Lake	2	354	9	0	932	1,239	354	9	0	309

TABLE 2. -- PHASE II ALLOWANCE ALLOCATIONS

State	Plant Name	Boiler [1]	Allowances for years 2000–2009					Allowances for years 2010 and thereafter			
			(A) [2] Unadjusted basic	(B) Special allowance reserve deduction	(C) Additional basic (§405(a)(3))	(D) Total Bonus	(E) [3] Total annual phase II	(F) [2] Unadjusted basic	(G) Special allowance reserve deduction	(H) Additional basic (§ 405(a)(3))	(I) [4] Total annual phase II
Minnesota	Hoot Lake	3	1,229	31	0	903	1,969	1,229	31	0	1,074
Minnesota	M L Hibbard	3	34	1	0	957	987	34	1	0	30
Minnesota	M L Hibbard	4	11	0	0	1,084	1,094	11	0	0	10
Minnesota	Minnesota Valley	3	71	2	0	876	938	71	2	0	62
Minnesota	Na 1 -- 7237	**2	0	0	0	0	0	0	0	0	0
Minnesota	Northeast Station	NEPP	1,203	30	0	0	1,044	1,203	30	0	1,051
Minnesota	Riverside	6	260	7	0	2,849	3,075	260	7	0	227
Minnesota	Riverside	7	103	3	0	1,249	1,336	103	3	0	90
Minnesota	Riverside	8	4,310	109	0	1,266	5,036	4,310	109	0	3,764
Minnesota	Sherburne County	1	14,960	379	0	0	12,981	14,960	378	0	13,067
Minnesota	Sherburne County	2	15,065	381	0	0	13,073	15,065	380	0	13,158
Minnesota	Sherburne County	3	14,805	375	0	0	12,846	14,805	374	0	12,931
Minnesota	Silver Lake	4	3,580	91	0	0	3,108	3,580	90	0	3,127
Minnesota	Syl Laskin	1	366	9	0	1,371	1,669	366	9	0	320
Minnesota	Syl Laskin	2	158	4	0	1,510	1,647	158	4	0	138
Mississippi	Baxter Wilson	1	53	1	0	313	360	366	9	0	320
Mississippi	Baxter Wilson	2	4,072	103	0	0	3,533	4,072	103	0	3,557
Mississippi	Delta	1	19	0	0	8	26	26	1	0	24
Mississippi	Delta	2	33	1	0	21	50	54	1	0	48
Mississippi	Gerald Andrus	1	3,750	95	0	0	3,254	3,750	95	0	3,275
Mississippi	Jack Watson	1	197	5	0	0	171	197	5	0	172
Mississippi	Jack Watson	2	206	5	0	0	179	206	5	0	180
Mississippi	Jack Watson	3	312	8	0	0	270	312	8	0	272
Mississippi	Jack Watson	4	8,598	218	0	0	7,460	8,598	217	0	7,510
Mississippi	Jack Watson	5	17,615	446	0	0	15,284	17,615	445	0	15,386
Mississippi	Moselle	1	16	0	0	21	35	38	1	0	33
Mississippi	Moselle	2	39	1	0	42	76	80	2	0	70
Mississippi	Moselle	3	10	0	0	33	42	43	1	0	38
Mississippi	Moselle	**6	0	0	0	0	0	0	0	0	0
Mississippi	Moselle	**7	0	0	0	0	0	0	0	0	0
Mississippi	Natchez	1	2	0	0	0	2	3	0	0	3
Mississippi	R D Morrow	1	5,485	139	0	0	4,759	5,485	138	0	4,791
Mississippi	R D Morrow	2	6,003	152	0	0	5,209	6,003	152	0	5,243
Mississippi	Rex Brown	3	8	0	0	34	41	42	1	0	37
Mississippi	Rex Brown	4	2	0	0	157	159	158	4	0	139
Mississippi	Rex Brown	1A	0	0	0	6	6	6	0	0	5
Mississippi	Rex Brown	1B	0	0	0	6	6	6	0	0	5
Mississippi	Sweatt	1	89	2	0	0	78	89	2	0	78
Mississippi	Sweatt	2	98	2	0	0	86	98	2	0	86
Mississippi	Victor J Daniel Jr	1	11,312	286	0	1,328	11,145	11,312	286	0	9,860
Mississippi	Victor J Daniel Jr	2	16,315	413	0	0	14,156	16,315	412	0	14,250
Mississippi	Wright	W4	0	0	0	0	0	0	0	0	0
Missouri	Asbury	1	7,770	196	175	0	6,916	7,770	196	175	6,962
Missouri	Blue Valley	3	5,336	135	0	0	4,630	5,336	135	0	4,661
Missouri	Chamois	2	6,235	158	0	0	5,410	6,235	157	0	5,446
Missouri	Columbia	6	1,033	26	0	0	895	1,033	26	0	902
Missouri	Columbia	7	4,149	104	0	0	3,601	4,149	104	0	3,624

TABLE 2. -- PHASE II ALLOWANCE ALLOCATIONS

State	Plant Name	Boiler [1]	Allowances for years 2000–2009					Allowances for years 2010 and thereafter			
			(A) [2] Unadjusted basic	(B) Special allowance reserve deduction	(C) Additional basic (§405(a)(3))	(D) Total Bonus	(E) [3] Total annual phase II	(F) [2] Unadjusted basic	(G) Special allowance reserve deduction	(H) Additional basic (§ 405(a)(3))	(I) [4] Total annual phase II
Missouri	Columbia	8	142	3	0	0	125	142	3	0	124
Missouri	Combustion Turbine 1	**NA4	0	0	0	0	0	0	0	0	0
Missouri	Combustion Turbine 1	**NA5	0	0	0	0	0	0	0	0	0
Missouri	Combustion Turbine 1	**NA6	0	0	0	0	0	0	0	0	0
Missouri	Combustion Turbine 1	**NA7	0	0	0	0	0	0	0	0	0
Missouri	Combustion Turbine 3	**3	0	0	0	0	0	0	0	0	0
Missouri	Empire Energy Center	**4	0	0	0	0	0	0	0	0	0
Missouri	Empire Energy Center	**NA2	0	0	0	0	0	0	0	0	0
Missouri	Empire Energy Center	**NA3	0	0	0	0	0	0	0	0	0
Missouri	Grand Avenue	**7	12	0	0	0	11	12	0	0	11
Missouri	Grand Avenue	**9	14	0	0	0	13	14	0	0	13
Missouri	Hawthorn	5	14,041	355	0	485	12,869	14,041	354	0	12,265
Missouri	Iatan	1	18,520	469	0	0	16,070	18,520	468	0	16,176
Missouri	Iatan	**2	0	0	0	0	0	0	0	0	0
Missouri	James River	3	3,802	96	0	0	3,299	777	20	0	678
Missouri	James River	4	6,828	173	0	0	5,924	1,429	36	0	1,248
Missouri	James River	5	2,374	60	55	0	2,115	2,374	60	55	2,129
Missouri	James River	**GT2	691	18	0	0	599	691	17	0	604
Missouri	Jim Hill	**1	0	0	0	0	0	0	0	0	0
Missouri	Labadie	1	19,538	495	455	0	17,408	19,538	493	455	17,521
Missouri	Labadie	2	18,213	461	424	0	16,228	18,213	460	424	16,332
Missouri	Labadie	3	19,464	493	453	0	17,342	19,464	491	453	17,455
Missouri	Labadie	4	17,346	439	404	0	15,455	17,346	438	404	15,555
Missouri	Lake Road	6	692	18	0	0	600	692	17	0	605
Missouri	Meramec	1	1,174	30	0	1,718	2,736	1,174	30	0	1,025
Missouri	Meramec	2	1,261	32	0	1,675	2,769	1,261	32	0	1,101
Missouri	Meramec	3	2,694	68	0	3,700	6,038	2,694	68	0	2,353
Missouri	Meramec	4	2,914	74	0	4,625	7,153	2,914	74	0	2,545
Missouri	Montrose	1	3,549	90	83	0	3,162	3,549	90	83	3,183
Missouri	Montrose	2	3,935	100	92	0	3,506	3,935	99	92	3,529
Missouri	Montrose	3	4,841	123	113	0	4,312	4,841	122	113	4,342
Missouri	Na 1 -- 7223	**1	0	0	0	0	0	0	0	0	0
Missouri	Na 1 -- 7223	**2	0	0	0	0	0	0	0	0	0
Missouri	Na 1 -- 7223	**3	0	0	0	0	0	0	0	0	0
Missouri	Na 1 -- 7228	**1	0	0	0	0	0	0	0	0	0
Missouri	New Madrid	1	13,554	343	316	0	12,077	13,554	342	316	12,155
Missouri	New Madrid	2	15,593	395	363	0	13,893	15,593	394	363	13,983
Missouri	Rg 1 & 2	**1	0	0	0	0	0	0	0	0	0
Missouri	Rg 1 & 2	**2	0	0	0	0	0	0	0	0	0
Missouri	Rush Island	1	15,856	401	0	1,083	14,842	15,856	400	0	13,850
Missouri	Rush Island	2	17,702	448	0	160	15,520	17,702	447	0	15,462
Missouri	Sibley	1	593	15	0	0	514	593	15	0	518
Missouri	Sibley	2	726	18	0	0	632	726	18	0	636
Missouri	Sibley	3	8,498	215	198	0	7,572	8,498	215	198	7,620
Missouri	Sikeston	1	7,760	196	0	0	6,734	7,760	196	0	6,778
Missouri	Sioux	1	12,048	305	280	0	10,734	12,048	304	280	10,804
Missouri	Sioux	2	10,565	267	246	0	9,414	10,565	267	246	9,474

TABLE 2. -- PHASE II ALLOWANCE ALLOCATIONS

State	Plant Name	Boiler [1]	Allowances for years 2000–2009					Allowances for years 2010 and thereafter			
			(A) [2] Unadjusted basic	(B) Special allowance reserve deduction	(C) Additional basic (§405(a)(3))	(D) Total Bonus	(E) [3] Total annual phase II	(F) [2] Unadjusted basic	(G) Special allowance reserve deduction	(H) Additional basic (§ 405(a)(3))	(I) [4] Total annual phase II
Missouri	Southwest	1	4,707	119	0	64	4,149	4,707	119	0	4,111
Missouri	Thomas Hill	MB1	4,921	125	115	0	4,364	4,921	124	115	4,414
Missouri	Thomas Hill	MB2	8,272	209	193	0	7,371	8,272	209	193	7,416
Missouri	Thomas Hill	MB3	20,862	526	0	0	18,102	20,862	527	0	18,222
Montana	Colstrip	1	8,409	213	0	500	7,796	8,409	212	0	7,345
Montana	Colstrip	2	8,383	212	0	535	7,810	8,383	212	0	7,322
Montana	Colstrip	3	4,195	106	0	733	4,373	4,195	106	0	3,864
Montana	Colstrip	4	3,334	84	0	0	2,893	3,334	84	0	2,912
Montana	Frank Bird	1	0	0	0	0	0	0	0	0	0
Montana	J E Corette	2	5,571	141	0	186	5,020	5,571	141	0	4,866
Montana	Lewis & Clark	B1	1,601	41	0	43	1,432	1,601	40	0	1,366
Nebraska	Bluffs	4	21	1	0	0	18	21	1	0	18
Nebraska	C W Burdick	B–3	0	0	0	0	0	0	0	0	0
Nebraska	Canaday	1	716	18	0	0	621	716	18	0	625
Nebraska	Gerald Gentleman Sta	1	10,221	259	0	1,860	10,728	10,221	258	0	9,828
Nebraska	Gerald Gentleman Sta	2	20,080	508	0	0	17,424	20,080	507	0	17,538
Nebraska	Harold Kramer	1	3	0	0	35	38	3	0	0	3
Nebraska	Harold Kramer	2	3	0	0	37	40	3	0	0	3
Nebraska	Harold Kramer	3	191	5	0	884	1,051	191	5	0	168
Nebraska	Harold Kramer	4	225	6	0	1,881	2,077	225	6	0	186
Nebraska	Hastings Energy Ctr	1	2,668	68	0	0	2,314	2,668	67	0	2,331
Nebraska	Lon Wright	6	1,350	34	0	862	2,034	1,350	34	0	1,179
Nebraska	Na 1 -- 7019	**NA2	0	0	0	0	0	0	0	0	0
Nebraska	Nebraska City	1	15,077	382	0	0	13,062	15,077	381	0	13,169
Nebraska	North Omaha	1	1,192	30	0	1,345	2,379	1,192	30	0	1,041
Nebraska	North Omaha	2	1,841	47	0	1,677	3,274	1,841	46	0	1,608
Nebraska	North Omaha	3	2,167	55	0	1,312	3,192	2,167	55	0	1,893
Nebraska	North Omaha	4	2,869	73	0	1,339	3,827	2,869	72	0	2,506
Nebraska	North Omaha	5	3,471	88	0	1,610	4,621	3,471	88	0	3,031
Nebraska	Platte	1	3,345	85	0	0	2,902	3,345	84	0	2,922
Nebraska	Sheldon	1	904	23	0	1,377	2,161	904	23	0	789
Nebraska	Sheldon	2	964	24	0	1,438	2,273	964	24	0	842
Nevada	Clark	1	16	0	0	6	20	26	1	0	22
Nevada	Clark	2	298	8	0	13	271	298	8	0	260
Nevada	Clark	3	1	0	0	17	18	18	0	0	18
Nevada	Fort Churchill	1	408	10	0	15	368	408	10	0	355
Nevada	Fort Churchill	2	621	16	0	34	573	621	16	0	542
Nevada	Harry Allen	**1	0	0	0	0	0	0	0	0	0
Nevada	Harry Allen	**2	0	0	0	0	0	0	0	0	0
Nevada	Harry Allen	**3	0	0	0	0	0	0	0	0	0
Nevada	Harry Allen	**4	0	0	0	0	0	0	0	0	0
Nevada	Harry Allen	**GT3	0	0	0	0	0	0	0	0	0
Nevada	Harry Allen	**GT4	0	0	0	0	0	0	0	0	0
Nevada	Mohave	1	29,849	757	0	541	26,437	29,849	755	0	26,071
Nevada	Mohave	2	29,728	753	0	543	26,336	29,728	751	0	25,966
Nevada	North Valmy	1	7,493	190	0	403	6,904	7,493	189	0	6,545
Nevada	North Valmy	2	4,524	115	0	303	4,228	4,524	114	0	3,952

TABLE 2. -- PHASE II ALLOWANCE ALLOCATIONS

State	Plant Name	Boiler [1]	Allowances for years 2000–2009					Allowances for years 2010 and thereafter			
			(A) [2]	(B)	(C)	(D)	(E) [3]	(F) [2]	(G)	(H)	(I) [4]
			Unadjusted basic	Special allowance reserve deduction	Additional basic (§405(a)(3))	Total Bonus	Total annual phase II	Unadjusted basic	Special allowance reserve deduction	Additional basic (§ 405(a)(3))	Total annual phase II
Nevada	Reid Gardner	1	2,264	57	0	191	2,156	2,264	57	0	1,978
Nevada	Reid Gardner	2	2,311	59	0	180	2,165	2,311	58	0	2,019
Nevada	Reid Gardner	3	2,245	57	0	161	2,109	2,245	57	0	1,961
Nevada	Reid Gardner	4	2,672	68	0	476	2,794	2,672	67	0	2,334
Nevada	Sunrise	1	29	1	0	25	50	60	2	0	52
Nevada	Tracy	1	15	0	0	1	15	15	0	0	13
Nevada	Tracy	2	48	1	0	4	46	48	1	0	42
Nevada	Tracy	3	347	9	0	10	311	347	9	0	303
New Hampshire	Merrimack	1	4,900	124	0	0	4,252	4,900	124	0	4,280
New Hampshire	Merrimack	2	10,560	267	0	0	9,164	10,560	267	0	9,223
New Hampshire	Newington	1	12,107	306	0	1,068	11,574	12,107	306	0	10,575
New Hampshire	Schiller	4	1,643	42	0	76	1,502	1,643	41	0	1,436
New Hampshire	Schiller	5	1,481	38	0	162	1,446	1,481	37	0	1,294
New Hampshire	Schiller	6	1,878	48	0	0	1,628	1,878	47	0	1,641
New Jersey	B L England	1	4,355	110	0	0	3,779	4,355	110	0	3,804
New Jersey	B L England	2	5,634	143	0	0	4,888	5,634	142	0	4,921
New Jersey	B L England	3	2,765	70	0	0	2,400	2,765	70	0	2,415
New Jersey	Bergen	1	2,260	57	0	0	1,962	2,260	57	0	1,974
New Jersey	Bergen	2	2,335	59	0	0	2,026	2,335	59	0	2,039
New Jersey	Burlington	7	641	16	0	0	557	641	16	0	560
New Jersey	Butler	**4	0	0	0	0	0	0	0	0	0
New Jersey	Deepwater	1	1,330	34	0	0	1,154	1,330	34	0	1,161
New Jersey	Deepwater	3	12	0	0	0	11	12	0	0	11
New Jersey	Deepwater	4	67	2	0	0	58	67	2	0	58
New Jersey	Deepwater	5	6	0	0	0	5	6	0	0	5
New Jersey	Deepwater	6	67	2	0	0	58	67	2	0	58
New Jersey	Deepwater	8	3,137	79	0	0	2,722	3,137	79	0	2,740
New Jersey	Deepwater	9	2,073	52	0	0	1,800	2,073	52	0	1,811
New Jersey	Gilbert	01	69	2	0	0	60	69	2	0	60
New Jersey	Gilbert	02	43	2	0	0	37	43	2	0	37
New Jersey	Gilbert	03	799	20	0	0	694	799	20	0	698
New Jersey	Gilbert	04	685	17	0	0	595	685	17	0	598
New Jersey	Gilbert	05	681	17	0	0	592	681	17	0	595
New Jersey	Gilbert	06	677	17	0	0	588	677	17	0	591
New Jersey	Gilbert	07	692	18	0	0	600	692	17	0	605
New Jersey	Hudson	1	1,368	35	0	0	1,187	1,368	35	0	1,194
New Jersey	Hudson	2	17,350	439	0	788	15,643	17,350	438	0	15,155
New Jersey	Kearny	7	166	4	0	0	144	166	4	0	145
New Jersey	Kearny	8	. 175	4	0	0	152	175	4	0	153
New Jersey	Linden	2	736	19	0	0	638	736	19	0	642
New Jersey	Linden	4	482	12	0	0	419	482	12	0	421
New Jersey	Linden	11	1,106	28	0	0	960	1,106	28	0	966
New Jersey	Linden	12	750	19	0	0	650	750	19	0	663
New Jersey	Linden	13	1,002	25	0	0	870	1,002	25	0	876
New Jersey	Mercer	1	8,688	220	0	80	7,619	8,688	219	0	7,589
New Jersey	Mercer	2	7,992	202	0	445	7,381	7,992	202	0	6,961
New Jersey	Na 3 -- 7141	**1	0	0	0	0	0	0	0	0	0

TABLE 2. -- PHASE II ALLOWANCE ALLOCATIONS

State	Plant Name	Boiler [1]	Allowances for years 2000–2009					Allowances for years 2010 and thereafter			
			(A) [2] Unadjusted basic	(B) Special allowance reserve deduction	(C) Additional basic (§405(a)(3))	(D) Total Bonus	(E) [3] Total annual phase II	(F) [2] Unadjusted basic	(G) Special allowance reserve deduction	(H) Additional basic (§ 405(a)(3))	(I) [4] Total annual phase II
New Jersey	Na 3 -- 7141	**2	0	0	0	0	0	0	0	0	0
New Jersey	Na 4 -- 7142	**1	0	0	0	0	0	0	0	0	0
New Jersey	Na 5 -- 7217	**1	0	0	0	0	0	0	0	0	0
New Jersey	Na 5 -- 7217	**2	0	0	0	0	0	0	0	0	0
New Jersey	Na 6 -- 7218	**1	0	0	0	0	0	0	0	0	0
New Jersey	Na 6 -- 7218	**2	0	0	0	0	0	0	0	0	0
New Jersey	Sayreville	02	2	0	0	0	2	2	0	0	2
New Jersey	Sayreville	03	2	0	0	0	2	2	0	0	2
New Jersey	Sayreville	05	46	0	0	0	41	46	0	0	41
New Jersey	Sayreville	06	42	0	0	0	39	42	0	0	37
New Jersey	Sayreville	07	875	22	0	0	759	875	22	0	764
New Jersey	Sayreville	08	1,019	26	0	0	884	1,019	26	0	890
New Jersey	Sewaren	1	133	3	0	0	116	133	3	0	117
New Jersey	Sewaren	2	389	10	0	0	336	389	10	0	340
New Jersey	Sewaren	3	290	7	0	0	252	290	7	0	254
New Jersey	Sewaren	4	656	17	0	0	569	656	17	0	573
New Jersey	Sewaren	5	0	0	0	0	0	0	0	0	0
New Jersey	Werner	04	223	6	0	0	193	223	6	0	194
New Mexico	Cunningham	121B	2	0	0	40	42	50	1	0	44
New Mexico	Cunningham	122B	4	0	0	265	269	232	6	0	203
New Mexico	Escalante	1	1,872	42	0	410	1,862	1,872	42	0	1,461
New Mexico	Escalante	**2	0	0	0	0	0	0	0	0	0
New Mexico	Four Corners	1	3,790	96	0	277	3,585	3,790	96	0	3,310
New Mexico	Four Corners	2	3,791	96	0	272	3,561	3,791	96	0	3,311
New Mexico	Four Corners	3	4,747	120	0	323	4,443	4,747	120	0	4,146
New Mexico	Four Corners	4	13,552	343	0	847	12,406	13,552	342	0	11,837
New Mexico	Four Corners	5	14,037	355	0	860	13,170	14,037	354	0	12,261
New Mexico	Maddox	**3	97	2	0	0	85	97	2	0	85
New Mexico	Maddox	051B	2	0	0	168	170	140	4	0	122
New Mexico	North Lovington	S2	0	0	0	0	0	0	0	0	0
New Mexico	Person	3	0	0	0	0	0	0	0	0	0
New Mexico	Person	4	0	0	0	0	0	0	0	0	0
New Mexico	Reeves	1	0	0	0	4	4	7	0	0	6
New Mexico	Reeves	2	0	0	0	7	7	5	0	0	4
New Mexico	Reeves	3	104	3	0	13	103	115	3	0	100
New Mexico	Rio Grande	6	0	0	0	3	3	5	0	0	4
New Mexico	Rio Grande	7	0	0	0	1	1	1	0	0	1
New Mexico	Rio Grande	8	1	0	0	79	80	71	2	0	62
New Mexico	San Juan	1	8,423	213	0	570	7,676	8,423	213	0	7,357
New Mexico	San Juan	2	6,171	156	0	522	5,677	6,171	156	0	5,390
New Mexico	San Juan	3	14,832	375	0	697	13,768	14,832	374	0	12,956
New Mexico	San Juan	4	13,917	352	0	667	12,944	13,917	351	0	12,156
New York	Albany	1	2,057	52	0	0	1,766	2,057	52	0	1,797
New York	Albany	2	1,777	45	0	0	1,542	1,777	45	0	1,552
New York	Albany	3	1,821	46	0	0	1,580	1,821	46	0	1,591
New York	Albany	4	1,926	49	0	0	1,672	1,926	49	0	1,684
New York	Arthur Kill	20	1,669	43	0	0	1,465	1,669	43	0	1,475

TABLE 2. — PHASE II ALLOWANCE ALLOCATIONS

State	Plant Name	Boiler [1]	Allowances for years 2000–2009					Allowances for years 2010 and thereafter			
			(A) [2] Unadjusted basic	(B) Special allowance reserve deduction	(C) Additional basic (§405(a)(3))	(D) Total Bonus	(E) [3] Total annual phase II	(F) [2] Unadjusted basic	(G) Special allowance reserve deduction	(H) Additional basic (§ 405(a)(3))	(I) [4] Total annual phase II
New York	Arthur Kill	30	2,705	68	0	0	2,348	2,705	68	0	2,363
New York	Astoria	10	1,389	35	0	0	1,206	1,389	35	0	1,213
New York	Astoria	20	1,775	45	0	0	1,541	1,775	45	0	1,550
New York	Astoria	30	3,456	87	0	0	3,000	3,456	87	0	3,019
New York	Astoria	40	2,715	69	0	0	2,356	2,715	69	0	2,371
New York	Astoria	50	3,085	78	0	0	2,677	3,085	78	0	2,695
New York	Bowline Point	1	4,845	123	0	0	4,203	4,845	122	0	4,232
New York	Bowline Point	2	4,846	123	0	0	4,204	4,846	122	0	4,233
New York	C R Huntley	63	2,812	71	0	196	2,636	2,812	71	0	2,456
New York	C R Huntley	64	2,993	76	0	45	2,642	2,993	76	0	2,614
New York	C R Huntley	65	3,077	78	0	0	2,670	3,077	78	0	2,687
New York	C R Huntley	66	3,116	79	0	0	2,706	3,116	79	0	2,723
New York	C R Huntley	67	6,599	167	0	0	5,727	6,599	167	0	5,764
New York	C R Huntley	68	6,149	156	0	0	5,335	6,149	155	0	5,371
New York	Charles Poletti	001	7,357	186	0	0	6,385	7,357	186	0	6,426
New York	Danskammer	1	1,083	27	0	0	941	1,083	27	0	946
New York	Danskammer	2	1,051	27	0	0	912	1,051	27	0	918
New York	Danskammer	3	3,576	91	0	0	3,102	3,576	90	0	3,124
New York	Danskammer	4	6,891	174	0	0	5,980	6,891	174	0	6,019
New York	Dunkirk	1	3,248	82	0	0	2,819	3,248	82	0	2,837
New York	Dunkirk	2	3,690	93	0	0	3,202	3,690	93	0	3,223
New York	Dunkirk	3	6,046	153	0	0	5,246	6,046	153	0	5,261
New York	Dunkirk	4	6,749	171	0	0	5,856	6,749	170	0	5,895
New York	E F Barrett	10	2,710	69	0	0	2,351	2,710	68	0	2,368
New York	E F Barrett	20	2,671	68	0	0	2,317	2,671	67	0	2,333
New York	East River	50	1,596	40	0	0	1,385	1,596	40	0	1,394
New York	East River	60	1,633	41	0	0	1,418	1,633	41	0	1,427
New York	East River	70	1,181	30	0	0	1,024	1,181	30	0	1,031
New York	Far Rockaway	40	537	14	0	0	465	537	14	0	469
New York	Glenwood	40	1,072	27	0	0	931	1,072	27	0	936
New York	Glenwood	50	1,032	26	0	0	896	1,032	26	0	901
New York	Goudey	11	905	23	0	0	785	905	23	0	790
New York	Goudey	12	892	23	0	0	773	892	23	0	779
New York	Goudey	13	3,756	95	0	0	3,260	3,756	95	0	3,281
New York	Greenidge	4	1,121	28	0	0	973	1,121	28	0	979
New York	Greenidge	5	1,119	28	0	0	971	1;119	28	0	978
New York	Greenidge	6	3,639	92	0	0	3,158	3,639	92	0	3,178
New York	Hickling	1	808	20	0	18	720	808	20	0	708
New York	Hickling	2	808	20	0	18	720	808	20	0	708
New York	Hickling	3	989	25	0	47	887	989	24	0	847
New York	Hickling	4	1,010	26	0	49	925	1,010	26	0	882
New York	Jennison	1	684	17	0	51	645	684	17	0	598
New York	Jennison	2	712	18	0	53	671	712	18	0	622
New York	Jennison	3	714	18	0	99	718	714	18	0	624
New York	Jennison	4	714	18	0	99	718	714	18	0	624
New York	Lovett	3	256	7	0	0	223	256	7	0	225
New York	Lovett	4	5,222	132	0	0	4,532	5,222	132	0	4,561

TABLE 2. -- PHASE II ALLOWANCE ALLOCATIONS

State	Plant Name	Boiler [1]	Allowances for years 2000–2009					Allowances for years 2010 and thereafter			
			(A) [2] Unadjusted basic	(B) Special allowance reserve deduction	(C) Additional basic (§405(a)(3))	(D) Total Bonus	(E) [3] Total annual phase II	(F) [2] Unadjusted basic	(G) Special allowance reserve deduction	(H) Additional basic (§ 405(a)(3))	(I) [4] Total annual phase II
New York	Lovett	5	5,700	144	0	0	4,946	5,700	144	0	4,979
New York	Milliken	1	5,631	143	0	0	4,885	5,631	142	0	4,919
New York	Milliken	2	5,959	151	0	0	5,171	5,959	150	0	5,205
New York	Northport	1	9,510	241	0	0	8,252	9,510	240	0	8,307
New York	Northport	2	11,575	293	0	0	10,044	11,575	292	0	10,111
New York	Northport	3	12,710	322	0	0	11,028	12,710	321	0	11,102
New York	Northport	4	6,620	168	0	0	5,743	6,620	167	0	5,782
New York	Oswego	1	0	0	0	0	0	0	0	0	0
New York	Oswego	2	0	0	0	0	0	0	0	0	0
New York	Oswego	3	103	3	0	0	89	103	3	0	90
New York	Oswego	4	455	12	0	0	395	455	11	0	398
New York	Oswego	5	9,499	240	0	8,929	17,172	9,499	240	0	8,297
New York	Oswego	6	5,494	139	0	0	4,767	5,494	139	0	4,799
New York	Port Jefferson	1	543	14	0	0	470	543	14	0	474
New York	Port Jefferson	2	569	14	0	0	494	569	14	0	497
New York	Port Jefferson	3	5,025	127	0	0	4,361	5,025	127	0	4,389
New York	Port Jefferson	4	5,920	150	0	0	5,137	5,920	149	0	5,171
New York	Ravenswood	10	3,617	92	0	0	3,138	3,617	91	0	3,160
New York	Ravenswood	20	3,060	77	0	0	2,656	3,060	77	0	2,673
New York	Ravenswood	30	5,704	144	0	0	4,950	5,704	144	0	4,982
New York	Rochester 3	1	0	0	0	0	0	0	0	0	0
New York	Rochester 3	2	0	0	0	0	0	0	0	0	0
New York	Rochester 3	3	2	0	0	0	2	2	0	0	2
New York	Rochester 3	4	0	0	0	0	0	0	0	0	0
New York	Rochester 3	7	71	2	0	139	201	71	2	0	62
New York	Rochester 3	8	0	0	0	0	0	0	0	0	0
New York	Rochester 3	12	2,593	66	0	0	2,250	2,593	65	0	2,265
New York	Rochester 7	1	1,249	32	0	0	1,084	1,249	32	0	1,090
New York	Rochester 7	2	1,858	47	0	0	1,612	1,858	47	0	1,623
New York	Rochester 7	3	1,813	46	0	0	1,573	1,813	46	0	1,583
New York	Rochester 7	4	2,529	64	0	0	2,194	2,529	64	0	2,209
New York	Roseton	1	16,577	420	0	1,077	15,461	16,577	416	0	14,480
New York	Roseton	2	14,766	374	0	1,972	14,802	14,766	373	0	12,915
New York	S A Carlson	9	759	19	0	0	659	759	19	0	663
New York	S A Carlson	10	768	19	0	0	667	768	19	0	671
New York	S A Carlson	11	486	13	0	0	421	486	12	0	425
New York	S A Carlson	12	1,457	36	0	0	1,266	1,457	36	0	1,273
New York	Somerset	1	15,871	402	0	0	13,772	15,871	401	0	13,802
New York	Waterside	41	268	7	0	0	251	268	7	0	252
New York	Waterside	42	283	7	0	0	246	283	7	0	247
New York	Waterside	51	476	13	0	0	413	476	13	0	415
New York	Waterside	52	476	12	0	0	414	476	12	0	415
New York	Waterside	61	492	12	0	0	428	492	12	0	430
New York	Waterside	62	578	14	0	0	503	578	14	0	505
New York	Waterside	80	1,288	33	0	0	1,118	1,288	33	0	1,125
New York	Waterside	90	1,409	35	0	0	1,223	1,409	35	0	1,231
New York	59Th Street	110	73	2	0	0	64	73	2	0	64

TABLE 2. — — PHASE II ALLOWANCE ALLOCATIONS

			Allowances for years 2000–2009					Allowances for years 2010 and thereafter			
			(A) [2]	(B)	(C)	(D)	(E) [3]	(F) [2]	(G)	(H)	(I) [4]
State	Plant Name	Boiler [1]	Unadjusted basic	Special allowance reserve deduction	Additional basic (§405(a)(3))	Total Bonus	Total annual phase II	Unadjusted basic	Special allowance reserve deduction	Additional basic (§ 405(a)(3)	Total annual phase II
New York	74Th Street	120	511	13	0	0	443	511	3	0	447
New York	74Th Street	121	513	13	0	0	445	513	13	0	448
New York	74Th Street	122	511	13	0	0	443	511	13	0	447
North Carolina	Asheville	1	7,567	192	0	0	6,566	7,567	191	0	6,610
North Carolina	Asheville	2	6,012	152	0	0	5,218	6,012	152	0	5,251
North Carolina	Belews Creek	1	35,325	895	0	0	30,648	35,325	893	0	30,855
North Carolina	Belews Creek	2	37,208	943	0	0	32,282	37,208	940	0	32,500
North Carolina	Buck	5	2	0	0	1,029	1,031	2	0	0	2
North Carolina	Buck	6	1	0	0	588	589	1	0	0	1
North Carolina	Buck	7	393	10	0	714	1,055	393	10	0	343
North Carolina	Buck	8	686	17	0	1,721	2,317	686	17	0	800
North Carolina	Buck	9	2,074	53	0	1,056	2,855	2,074	52	0	1,812
North Carolina	Cape Fear	3	0	0	0	599	599	0	0	0	0
North Carolina	Cape Fear	4	0	0	0	599	599	0	0	0	0
North Carolina	Cape Fear	5	3,303	84	0	492	3,357	3,303	83	0	2,885
North Carolina	Cape Fear	6	3,378	86	0	957	3,888	3,378	85	0	2,951
North Carolina	Cliffside	1	1	0	0	897	898	1	0	0	1
North Carolina	Cliffside	2	1	0	0	871	872	1	0	0	1
North Carolina	Cliffside	3	24	1	0	1,270	1,291	24	1	0	21
North Carolina	Cliffside	4	20	1	0	1,286	1,305	20	1	0	17
North Carolina	Cliffside	5	13,530	342	0	2,199	13,840	13,530	342	0	11,818
North Carolina	Dan River	1	415	11	0	1,546	1,908	415	10	0	363
North Carolina	Dan River	2	381	10	0	2,446	2,776	381	10	0	332
North Carolina	Dan River	3	681	17	0	2,196	2,766	681	17	0	595
North Carolina	G G Allen	1	35	1	0	2,396	2,427	35	1	0	30
North Carolina	G G Allen	2	39	1	0	2,779	2,813	39	1	0	34
North Carolina	G G Allen	3	5,123	130	0	1,638	6,082	5,123	129	0	4,475
North Carolina	G G Allen	4	3,659	93	0	2,542	5,718	3,659	92	0	3,196
North Carolina	G G Allen	5	4,432	112	0	2,093	5,940	4,432	112	0	3,871
North Carolina	L V Sutton	1	824	21	0	1,330	2,045	824	21	0	720
North Carolina	L V Sutton	2	1,360	34	0	1,080	2,261	1,360	34	0	1,186
North Carolina	L V Sutton	3	5,831	148	0	3,195	8,253	5,831	147	0	5,093
North Carolina	Lee	1	741	19	0	987	1,630	741	19	0	647
North Carolina	Lee	2	948	24	0	855	1,677	948	24	0	828
North Carolina	Lee	3	5,536	140	0	918	5,723	5,536	140	0	4,837
North Carolina	Marshall	1	8,225	208	0	1,567	8,704	8,225	208	0	7,184
North Carolina	Marshall	2	9,292	235	0	1,133	9,196	9,292	235	0	8,116
North Carolina	Marshall	3	17,013	431	0	976	15,738	17,013	429	0	14,861
North Carolina	Marshall	4	15,255	386	0	1,785	15,023	15,255	385	0	13,325
North Carolina	Mayo	1A	14,609	370	0	0	12,677	14,609	369	0	12,760
North Carolina	Mayo	1B	14,609	370	0	0	12,677	14,609	369	0	12,760
North Carolina	Riverbend	7	1,539	39	0	605	2,140	1,539	39	0	1,344
North Carolina	Riverbend	8	1,420	36	0	670	2,103	1,420	36	0	1,240
North Carolina	Riverbend	9	406	10	0	1,911	2,264	406	10	0	355
North Carolina	Riverbend	10	1,339	34	0	1,454	2,616	1,339	34	0	1,169
North Carolina	Roxboro	1	12,671	321	0	0	10,995	12,671	320	0	11,068
North Carolina	Roxboro	2	22,445	568	0	0	19,476	22,445	567	0	19,605

TABLE 2. -- PHASE II ALLOWANCE ALLOCATIONS

State	Plant Name	Boiler [1]	Allowances for years 2000–2009					Allowances for years 2010 and thereafter			
			(A) [2] Unadjusted basic	(B) Special allowance reserve deduction	(C) Additional basic (§405(a)(3))	(D) Total Bonus	(E) [3] Total annual phase II	(F) [2] Unadjusted basic	(G) Special allowance reserve deduction	(H) Additional basic (§ 405(a)(3))	(I) [4] Total annual phase II
North Carolina	Roxboro	3A	10,154	257	0	210	9,021	10,154	256	0	8,870
North Carolina	Roxboro	3B	10,154	257	0	210	9,021	10,154	256	0	8,870
North Carolina	Roxboro	4A	11,892	301	0	0	10,319	11,892	300	0	10,387
North Carolina	Roxboro	4B	11,892	301	0	0	10,319	11,892	300	0	10,387
North Carolina	W H Weatherspoon	1	533	13	0	656	1,118	533	13	0	466
North Carolina	W H Weatherspoon	2	540	14	0	653	1,121	540	14	0	471
North Carolina	W H Weatherspoon	3	1,069	27	0	690	1,618	1,069	27	0	934
North Dakota	Antelope Valley	B1	13,652	346	0	0	11,846	13,652	345	0	11,824
North Dakota	Antelope Valley	B2	12,720	322	0	0	11,037	12,720	321	0	11,111
North Dakota	Coal Creek	1	26,637	674	0	0	23,111	26,637	672	0	23,267
North Dakota	Coal Creek	2	24,212	613	0	0	21,007	24,212	611	0	21,149
North Dakota	Coyote	B1	18,490	468	0	0	16,044	18,490	467	0	16,150
North Dakota	Dakotas	**1	0	0	0	0	0	0	0	0	0
North Dakota	Leland Olds	1	10,404	263	0	0	9,027	10,404	263	0	9,087
North Dakota	Leland Olds	2	30,171	765	0	0	26,175	30,171	763	0	26,352
North Dakota	Milton R Young	B1	14,799	375	0	0	12,841	14,799	374	0	12,926
North Dakota	Milton R Young	B2	18,152	459	0	0	15,751	18,152	458	0	15,855
North Dakota	R M Heskett	B2	3,659	93	0	0	3,174	3,659	92	0	3,196
North Dakota	Stanton	1	8,510	215	0	0	7,385	8,510	215	0	7,433
North Dakota	Stanton	10	1,525	39	0	0	1,322	1,525	39	0	1,332
Ohio	Acme	9	1	0	0	0	1	1	0	0	1
Ohio	Acme	11	7	0	0	0	7	7	0	0	7
Ohio	Acme	13	10	0	0	1,837	1,846	10	0	0	9
Ohio	Acme	14	15	0	0	2,505	2,519	15	0	0	14
Ohio	Acme	15	21	0	0	3,346	3,365	21	0	0	19
Ohio	Acme	16	2,316	59	0	394	2,403	2,316	58	0	2,023
Ohio	Acme	91	888	22	0	1,236	2,007	888	22	0	776
Ohio	Acme	92	794	20	0	1,105	1,794	794	20	0	694
Ohio	Ashtabula	7	8,036	203	187	0	7,160	8,036	203	187	7,206
Ohio	Ashtabula	8	2,669	67	0	0	2,317	2,669	66	0	2,332
Ohio	Ashtabula	9	2,276	58	0	0	1,974	2,276	56	0	1,987
Ohio	Ashtabula	10	2,054	52	0	0	1,779	2,054	52	0	1,794
Ohio	Ashtabula	11	2,160	54	0	0	1,873	2,160	54	0	1,886
Ohio	Avon Lake	9	2,933	74	0	0	2,545	2,933	74	0	2,562
Ohio	Avon Lake	10	2,575	65	0	0	2,234	2,575	65	0	2,249
Ohio	Avon Lake	11	5,594	142	130	0	4,984	5,594	141	130	5,016
Ohio	Avon Lake	12	16,918	428	394	0	15,074	16,918	427	394	15,171
Ohio	Bay Shore	1	5,392	136	0	0	4,680	5,392	136	0	4,710
Ohio	Bay Shore	2	5,136	130	0	0	4,456	5,136	130	0	4,486
Ohio	Bay Shore	3	4,887	124	0	0	4,240	4,887	123	0	4,269
Ohio	Bay Shore	4	8,042	204	0	0	6,976	8,042	203	0	7,024
Ohio	Cardinal	1	16,449	416	383	0	14,657	16,449	415	383	14,751
Ohio	Cardinal	2	18,395	466	428	0	16,389	18,395	464	428	16,496
Ohio	Cardinal	3	19,104	484	0	583	17,158	19,104	482	0	16,887
Ohio	Conesville	1	2,019	51	47	0	1,799	2,019	51	47	1,811
Ohio	Conesville	2	2,349	59	55	0	2,094	2,349	59	55	2,107
Ohio	Conesville	3	2,638	67	61	0	2,350	2,638	67	61	2,365

TABLE 2. — PHASE II ALLOWANCE ALLOCATIONS

State	Plant Name	Boiler [1]	Allowances for years 2000–2009					Allowances for years 2010 and thereafter			
			(A) [2] Unadjusted basic	(B) Special allowance reserve deduction	(C) Additional basic (§405(a)(3))	(D) Total Bonus	(E) [3] Total annual phase II	(F) [2] Unadjusted basic	(G) Special allowance reserve deduction	(H) Additional basic (§ 405(a)(3))	(I) [4] Total annual phase II
Ohio	Conesville	4	23,410	593	545	0	20,856	23,410	591	545	20,993
Ohio	Conesville	5	8,190	207	0	1,856	8,965	8,190	207	0	7,153
Ohio	Conesville	6	9,070	230	0	1,457	9,326	9,070	229	0	7,922
Ohio	Dover	**6	175	4	0	0	152	175	4	0	153
Ohio	Eastlake	1	3,746	95	87	0	3,336	3,746	95	87	3,350
Ohio	Eastlake	2	4,146	105	97	0	3,694	4,146	105	97	3,718
Ohio	Eastlake	3	4,808	122	112	0	4,284	4,808	121	112	4,312
Ohio	Eastlake	4	6,966	176	162	0	6,207	6,966	176	162	6,246
Ohio	Eastlake	5	18,483	468	430	0	16,468	18,483	467	430	16,574
Ohio	Edgewater	11	1,003	25	0	0	871	481	12	0	420
Ohio	Edgewater	12	1,081	27	0	0	939	519	13	0	453
Ohio	Edgewater	13	2,426	61	56	0	2,162	2,426	61	56	2,175
Ohio	Gen J M Gavin	1	37,957	962	885	0	33,817	37,957	959	885	34,039
Ohio	Gen J M Gavin	2	38,668	980	901	0	34,450	38,668	977	901	34,676
Ohio	Gorge	25	1,711	43	0	0	1,485	821	21	0	717
Ohio	Gorge	26	1,917	49	0	0	1,662	920	23	0	804
Ohio	Hamilton	9	1,326	34	0	505	1,855	1,326	33	0	1,150
Ohio	J M Stuart	1	22,433	568	0	0	19,465	22,433	566	0	19,595
Ohio	J M Stuart	2	21,267	538	0	0	18,453	21,267	537	0	18,576
Ohio	J M Stuart	3	21,087	534	0	0	18,297	21,087	532	0	18,419
Ohio	J M Stuart	4	22,287	564	0	0	19,338	22,287	563	0	19,467
Ohio	Killen Station	2	19,344	490	0	0	16,784	19,344	488	0	16,897
Ohio	Kyger Creek	1	9,256	234	0	0	8,032	9,256	234	0	8,084
Ohio	Kyger Creek	2	8,909	226	0	0	7,730	8,908	225	0	7,782
Ohio	Kyger Creek	3	8,597	218	0	0	7,459	8,597	217	0	7,509
Ohio	Kyger Creek	4	8,981	227	0	0	7,794	8,981	227	0	7,844
Ohio	Kyger Creek	5	8,997	228	0	0	7,808	8,997	227	0	7,858
Ohio	Lake Road	6	0	0	0	1,340	1,340	0	0	0	0
Ohio	Lake Shore	18	5,720	145	0	1,027	5,990	5,720	144	0	4,997
Ohio	Lake Shore	91	53	1	0	0	47	53	1	0	47
Ohio	Lake Shore	92	95	2	0	0	84	95	2	0	83
Ohio	Lake Shore	93	74	2	0	0	65	74	2	0	65
Ohio	Lake Shore	94	122	3	0	0	108	122	3	0	107
Ohio	Miami Fort	6	5,464	138	127	0	4,868	5,464	138	127	4,900
Ohio	Miami Fort	7	18,485	468	430	0	16,469	18,485	467	430	16,576
Ohio	Miami Fort	8	20,834	527	0	0	18,079	20,834	526	0	18,196
Ohio	Miami Fort	5–1	159	4	4	0	142	159	4	4	143
Ohio	Miami Fort	5–2	159	4	4	0	142	159	4	4	143
Ohio	Muskingum River	1	7,140	181	166	0	6,361	7,140	180	166	6,403
Ohio	Muskingum River	2	6,800	172	158	0	6,059	6,800	172	158	6,097
Ohio	Muskingum River	3	6,698	170	156	0	5,966	6,698	169	156	6,007
Ohio	Muskingum River	4	5,653	143	132	0	5,037	5,653	143	132	5,069
Ohio	Muskingum River	5	19,423	492	452	0	17,306	19,423	490	452	17,416
Ohio	Niles	1	3,333	84	78	0	2,970	3,333	84	78	2,989
Ohio	Niles	2	4,367	111	102	0	3,891	4,367	110	102	3,917
Ohio	O H Hutchings	H–1	453	11	0	1,336	1,733	453	11	0	398
Ohio	O H Hutchings	H–2	353	9	0	1,362	1,668	353	9	0	308

TABLE 2. -- PHASE II ALLOWANCE ALLOCATIONS

State	Plant Name	Boiler [1]	Allowances for years 2000–2009					Allowances for years 2010 and thereafter			
			(A) [2] Unadjusted basic	(B) Special allowance reserve deduction	(C) Additional basic (§405(a)(3))	(D) Total Bonus	(E) [3] Total annual phase II	(F) [2] Unadjusted basic	(G) Special allowance reserve deduction	(H) Additional basic (§ 405(a)(3))	(I) [4] Total annual phase II
Ohio	O H Hutchings	H-3	667	17	0	1,019	1,596	667	17	0	582
Ohio	O H Hutchings	H-4	732	19	0	983	1,618	732	18	0	640
Ohio	O H Hutchings	H-5	566	15	0	1,116	1,626	566	15	0	512
Ohio	O H Hutchings	H-6	424	11	0	1,269	1,657	424	11	0	370
Ohio	Picway	9	2,368	60	55	0	2,110	2,368	60	55	2,123
Ohio	Poston	1	900	23	0	0	780	900	23	0	786
Ohio	Poston	2	836	21	0	0	725	836	21	0	730
Ohio	Poston	3	1,093	28	0	0	948	1,093	28	0	954
Ohio	R E Burger	1	1,409	36	0	0	1,223	676	17	0	591
Ohio	R E Burger	2	1,376	35	0	0	1,196	661	17	0	577
Ohio	R E Burger	3	1,423	36	0	0	1,235	683	17	0	597
Ohio	R E Burger	4	1,457	37	0	0	1,265	700	18	0	611
Ohio	R E Burger	5	1,479	37	34	0	1,319	1,479	37	34	1,328
Ohio	R E Burger	6	1,474	37	34	0	1,314	1,474	37	34	1,322
Ohio	R E Burger	7	5,174	131	120	0	4,609	5,174	131	120	4,639
Ohio	R E Burger	8	5,967	151	139	0	5,317	5,967	151	139	5,351
Ohio	Refuse & Coal	001	486	12	0	0	423	486	12	0	426
Ohio	Refuse & Coal	002	435	12	0	0	378	435	12	0	376
Ohio	Refuse & Coal	003	459	12	0	0	399	459	12	0	402
Ohio	Refuse & Coal	004	501	12	0	0	432	501	12	0	438
Ohio	Refuse & Coal	005	429	12	0	0	372	429	12	0	375
Ohio	Refuse & Coal	006	417	12	0	0	360	417	12	0	363
Ohio	Richard Gorsuch	1	7,030	178	0	0	6,096	7,030	178	0	6,140
Ohio	Richard Gorsuch	2	5,786	146	0	0	5,020	5,786	146	0	5,054
Ohio	Richard Gorsuch	3	7,862	198	0	0	6,822	7,862	198	0	6,866
Ohio	Richard Gorsuch	4	1,602	40	0	0	1,392	1,602	40	0	1,400
Ohio	Tidd	**1	818	21	0	0	708	818	21	0	712
Ohio	Toronto	9	2,140	54	0	0	1,859	1,027	26	0	897
Ohio	Toronto	10	3,820	97	0	0	3,314	1,834	47	0	1,602
Ohio	Toronto	11	4,128	105	0	0	3,581	1,982	49	0	1,732
Ohio	W H Sammis	1	7,130	180	0	0	6,187	7,130	180	0	6,228
Ohio	W H Sammis	2	6,253	158	0	0	5,426	6,253	158	0	5,462
Ohio	W H Sammis	3	7,129	180	0	0	6,186	7,129	180	0	6,227
Ohio	W H Sammis	4	6,317	160	0	0	5,481	6,317	159	0	5,518
Ohio	W H Sammis	5	11,600	294	270	0	10,335	11,600	293	270	10,402
Ohio	W H Sammis	6	22,210	562	517	0	19,790	22,210	561	517	19,916
Ohio	W H Sammis	7	20,747	525	483	0	18,486	20,747	524	483	18,605
Ohio	W H Zimmer	1	18,458	467	0	0	16,017	18,458	466	0	16,122
Ohio	Walter C Beckjord	1	539	14	0	1,363	1,830	539	14	0	470
Ohio	Walter C Beckjord	2	812	21	0	1,148	1,653	812	21	0	709
Ohio	Walter C Beckjord	3	1,226	31	0	1,455	2,521	1,226	31	0	1,073
Ohio	Walter C Beckjord	4	2,442	62	0	1,125	3,245	2,442	62	0	2,133
Ohio	Walter C Beckjord	5	4,294	109	100	0	3,825	4,294	108	100	3,851
Ohio	Walter C Beckjord	6	11,048	280	257	0	9,843	11,048	279	257	9,907
Ohio	Woodsdale	**GT1	337	9	0	0	292	337	9	0	294
Ohio	Woodsdale	**GT2	337	9	0	0	292	337	9	0	294
Ohio	Woodsdale	**GT3	337	9	0	0	292	337	9	0	294

TABLE 2. – – PHASE II ALLOWANCE ALLOCATIONS

State	Plant Name	Boiler [1]	Allowances for years 2000–2009					Allowances for years 2010 and thereafter			
			(A) [2]	(B)	(C)	(D)	(E) [3]	(F) [2]	(G)	(H)	(I) [4]
			Unadjusted basic	Special allowance reserve deduction	Additional basic (§405(a)(3))	Total Bonus	Total annual phase II	Unadjusted basic	Special allowance reserve deduction	Additional basic (§ 405(a)(3))	Total annual phase II
Ohio	Woodsdale	**GT4	337	9	0	0	292	337	9	0	294
Ohio	Woodsdale	**GT5	337	9	0	0	292	337	9	0	294
Ohio	Woodsdale	**GT8	0	0	0	0	0	0	0	0	0
Ohio	Woodsdale	**GT9	0	0	0	0	0	0	0	0	0
Ohio	Woodsdale	**GT10	0	0	0	0	0	0	0	0	0
Ohio	Woodsdale	**GT11	0	0	0	0	0	0	0	0	0
Ohio	Woodsdale	**GT12	0	0	0	0	0	0	0	0	0
Oklahoma	Anadarko	3	0	0	0	0	0	1	0	0	1
Oklahoma	Arbuckle	ARB	1	0	0	44	45	56	1	0	49
Oklahoma	Comanche	7251	2	0	0	330	332	164	4	0	143
Oklahoma	Comanche	7252	2	0	0	0	2	164	4	0	143
Oklahoma	Conoco	**1	253	6	0	0	220	253	6	0	221
Oklahoma	Conoco	**2	253	6	0	0	220	253	6	0	221
Oklahoma	Grda	1	15,939	403	0	694	14,525	15,939	402	0	13,923
Oklahoma	Grda	2	9,550	242	0	38	8,325	9,550	241	0	8,342
Oklahoma	Horseshoe Lake	6	4	0	0	169	173	163	5	0	156
Oklahoma	Horseshoe Lake	7	5	0	0	226	231	236	6	0	206
Oklahoma	Horseshoe Lake	8	6	0	0	306	313	406	10	0	357
Oklahoma	Hugo	1	13,090	331	0	421	11,780	13,090	330	0	11,434
Oklahoma	Inola	**1	0	0	0	0	0	0	0	0	0
Oklahoma	Mooreland	1	0	0	0	0	0	1	0	0	1
Oklahoma	Mooreland	2	1	0	0	43	44	65	2	0	56
Oklahoma	Mooreland	3	0	0	0	6	6	19	0	0	17
Oklahoma	Muskogee	3	3	0	0	138	141	156	4	0	136
Oklahoma	Muskogee	4	10,130	256	0	446	9,236	10,130	256	0	8,848
Oklahoma	Muskogee	5	8,937	226	0	456	8,211	8,937	226	0	7,806
Oklahoma	Muskogee	6	15,892	402	0	516	14,307	15,892	401	0	13,861
Oklahoma	Mustang	1	1	0	0	31	32	30	1	0	26
Oklahoma	Mustang	2	1	0	0	25	26	29	1	0	25
Oklahoma	Mustang	3	1	0	0	0	1	92	2	0	81
Oklahoma	Mustang	4	5	0	0	158	163	218	6	0	190
Oklahoma	Na 1 – – 5030	**1	0	0	0	0	0	0	0	0	0
Oklahoma	Na 1 – – 5030	**2	0	0	0	0	0	0	0	0	0
Oklahoma	Na 1 – – 5030	**3	0	0	0	0	0	0	0	0	0
Oklahoma	Northeastern	3301	1,878	48	0	99	1,727	1,878	47	0	1,641
Oklahoma	Northeastern	3302	6,363	161	0	366	5,888	6,363	161	0	5,558
Oklahoma	Northeastern	3313	15,113	383	0	608	13,721	15,113	382	0	13,200
Oklahoma	Northeastern	3314	16,354	414	0	572	14,762	16,354	413	0	14,285
Oklahoma	Ponca	2	0	0	0	0	0	0	0	0	0
Oklahoma	Riverside	1501	6	0	0	514	519	478	12	0	416
Oklahoma	Riverside	1502	5	0	0	260	265	362	10	0	333
Oklahoma	Seminole	1	14	0	0	398	412	437	11	0	382
Oklahoma	Seminole	2	6	0	0	447	452	482	12	0	430
Oklahoma	Seminole	3	44	1	0	455	494	577	15	0	504
Oklahoma	Sooner	1	11,336	287	0	550	10,387	11,336	286	0	9,902
Oklahoma	Sooner	2	10,781	273	0	545	9,899	10,781	272	0	9,417
Oklahoma	Southwestern	8002	0	0	0	15	15	20	1	0	17

TABLE 2. -- PHASE II ALLOWANCE ALLOCATIONS

State	Plant Name	Boiler [1]	Allowances for years 2000–2009					Allowances for years 2010 and thereafter			
			(A) [2] Unadjusted basic	(B) Special allowance reserve deduction	(C) Additional basic (§405(a)(3))	(D) Total Bonus	(E) [3] Total annual phase II	(F) [2] Unadjusted basic	(G) Special allowance reserve deduction	(H) Additional basic (§ 405(a)(3))	(I) [4] Total annual phase II
Oklahoma	Southwestern	6003	3	0	0	161	164	166	5	0	164
Oklahoma	Southwestern	601N	0	0	0	3	3	5	0	0	4
Oklahoma	Southwestern	601S	0	0	0	0	0	3	0	0	3
Oklahoma	Tulsa	1402	0	0	0	96	96	51	1	0	45
Oklahoma	Tulsa	1403	0	0	0	4	4	3	0	0	3
Oklahoma	Tulsa	1404	1	0	0	57	58	73	2	0	64
Oregon	Boardman	1SG	15,286	387	0	0	13,265	15,286	386	0	13,352
Pennsylvania	Armstrong	1	6,918	175	161	0	6,164	6,918	175	161	6,203
Pennsylvania	Armstrong	2	7,407	188	172	0	6,598	7,407	187	172	6,642
Pennsylvania	Bruce Mansfield	1	14,532	368	0	0	12,609	14,532	367	0	12,693
Pennsylvania	Bruce Mansfield	2	16,077	407	0	0	13,950	16,077	406	0	14,043
Pennsylvania	Bruce Mansfield	3	16,538	419	0	0	14,350	16,538	418	0	14,445
Pennsylvania	Brunner Island	1	13,326	337	310	0	11,874	13,326	336	310	11,950
Pennsylvania	Brunner Island	2	14,830	376	348	0	13,303	14,830	377	348	13,389
Pennsylvania	Brunner Island	3	25,836	654	601	0	23,018	25,836	652	601	23,168
Pennsylvania	Cheswick	1	18,600	476	436	0	16,751	18,600	475	436	16,859
Pennsylvania	Conemaugh	1	28,874	732	672	0	25,723	28,874	730	672	25,891
Pennsylvania	Conemaugh	2	32,005	811	745	0	28,513	32,005	809	745	28,700
Pennsylvania	Cromby	1	2,516	64	0	0	2,184	2,516	64	0	2,199
Pennsylvania	Cromby	2	2,411	61	0	0	2,093	2,411	61	0	2,106
Pennsylvania	Delaware	71	850	22	0	0	737	850	21	0	743
Pennsylvania	Delaware	81	614	16	0	0	532	614	16	0	536
Pennsylvania	Eddystone	1	2,920	74	0	290	2,823	2,920	74	0	2,550
Pennsylvania	Eddystone	2	2,856	72	0	508	2,865	2,856	72	0	2,496
Pennsylvania	Eddystone	3	2,166	55	0	0	1,879	2,166	55	0	1,892
Pennsylvania	Eddystone	4	2,298	58	0	0	1,994	2,298	58	0	2,007
Pennsylvania	Elrama	1	812	21	0	939	1,844	812	21	0	709
Pennsylvania	Elrama	2	755	19	0	955	1,810	755	19	0	660
Pennsylvania	Elrama	3	1,743	44	0	42	1,555	1,743	44	0	1,522
Pennsylvania	Elrama	4	2,948	75	0	0	2,556	2,948	74	0	2,575
Pennsylvania	F R Phillips	1	164	3	0	518	662	164	3	0	144
Pennsylvania	F R Phillips	2	125	3	0	394	504	125	3	0	109
Pennsylvania	F R Phillips	3	290	8	0	911	1,162	290	8	0	252
Pennsylvania	F R Phillips	4	278	7	0	870	1,111	278	7	0	242
Pennsylvania	F R Phillips	5	281	7	0	884	1,130	281	7	0	245
Pennsylvania	F R Phillips	6	1,265	32	0	915	2,013	1,265	32	0	1,105
Pennsylvania	Front Street	7	337	9	0	0	292	337	9	0	294
Pennsylvania	Front Street	8	337	9	0	0	292	337	9	0	294
Pennsylvania	Front Street	9	1,344	36	0	0	1,164	1,344	32	0	1,176
Pennsylvania	Front Street	10	1,344	36	0	0	1,164	1,344	32	0	1,176
Pennsylvania	Hatfield'S Ferry	1	16,157	460	423	0	16,176	16,157	458	423	16,283
Pennsylvania	Hatfield'S Ferry	2	17,915	453	417	0	15,863	17,915	452	417	16,065
Pennsylvania	Hatfield'S Ferry	3	19,329	489	450	0	17,222	19,329	486	450	17,333
Pennsylvania	Holtwood	17	4,061	103	0	0	3,542	4,061	103	0	3,565
Pennsylvania	Homer City	1	20,293	514	0	0	17,608	20,293	512	0	17,726
Pennsylvania	Homer City	2	17,813	446	0	901	16,184	17,813	445	0	15,384
Pennsylvania	Homer City	3	31,573	800	0	0	27,392	31,573	788	0	27,576

TABLE 2. -- PHASE II ALLOWANCE ALLOCATIONS

State	Plant Name	Boiler [1]	Allowances for years 2000–2009					Allowances for years 2010 and thereafter			
			(A) [2]	(B)	(C)	(D)	(E) [3]	(F) [2]	(G)	(H)	(I) [4]
			Unadjusted basic	Special allowance reserve deduction	Additional basic (§405(a)(3))	Total Bonus	Total annual phase II	Unadjusted basic	Special allowance reserve deduction	Additional basic (§ 405(a)(3))	Total annual phase II
Pennsylvania	Hunlock Power	6	2,579	65	0	0	2,238	2,579	65	0	2,253
Pennsylvania	Keystone	1	32,247	817	0	0	27,978	32,247	815	0	28,167
Pennsylvania	Keystone	2	34,335	870	0	0	29,789	34,335	868	0	29,990
Pennsylvania	Marcus Hook Refinery	1	0	0	0	0	0	0	0	0	0
Pennsylvania	Martins Creek	1	6,075	154	141	0	5,412	6,075	153	141	5,448
Pennsylvania	Martins Creek	2	6,154	156	143	0	5,483	6,154	155	143	5,519
Pennsylvania	Martins Creek	3	15,064	381	0	0	13,072	15,064	380	0	13,158
Pennsylvania	Martins Creek	4	13,857	351	0	0	12,024	13,857	350	0	12,103
Pennsylvania	Mitchell	1	0	0	0	0	0	0	0	0	0
Pennsylvania	Mitchell	2	1	0	0	0	1	1	0	0	1
Pennsylvania	Mitchell	3	0	0	0	0	0	0	0	0	0
Pennsylvania	Mitchell	33	3,540	90	0	431	3,502	3,540	89	0	3,092
Pennsylvania	Montour	1	27,398	693	0	215	23,987	27,398	692	0	23,931
Pennsylvania	Montour	2	28,204	714	0	0	24,470	28,204	712	0	24,635
Pennsylvania	New Castle	1	1,478	37	0	0	1,282	709	18	0	619
Pennsylvania	New Castle	2	1,643	41	0	0	1,426	789	20	0	689
Pennsylvania	New Castle	3	3,248	82	0	0	2,819	3,248	82	0	2,837
Pennsylvania	New Castle	4	2,973	75	0	215	2,795	2,973	75	0	2,597
Pennsylvania	New Castle	5	5,159	131	0	0	4,478	5,159	130	0	4,508
Pennsylvania	Portland	1	2,850	72	66	0	2,539	2,850	72	66	2,555
Pennsylvania	Portland	2	4,913	124	114	0	4,377	4,913	124	114	4,405
Pennsylvania	Richmond	63	0	0	0	0	0	0	0	0	0
Pennsylvania	Richmond	64	0	0	0	0	0	0	0	0	0
Pennsylvania	Schuylkill	1	654	17	0	0	587	654	17	0	571
Pennsylvania	Seward	12	1,253	32	0	0	1,087	1,253	32	0	1,094
Pennsylvania	Seward	14	1,253	32	0	0	1,087	1,253	32	0	1,094
Pennsylvania	Seward	15	5,715	145	0	0	4,959	5,715	144	0	4,992
Pennsylvania	Shawville	1	4,930	125	115	0	4,393	4,930	124	115	4,422
Pennsylvania	Shawville	2	4,960	126	115	0	4,419	4,960	125	115	4,448
Pennsylvania	Shawville	3	6,803	172	158	0	6,061	6,803	172	158	6,100
Pennsylvania	Shawville	4	6,757	171	157	0	6,020	6,757	171	157	6,059
Pennsylvania	Southwark	11	0	0	0	0	0	0	0	0	0
Pennsylvania	Southwark	12	0	0	0	0	0	0	0	0	0
Pennsylvania	Southwark	21	0	0	0	0	0	0	0	0	0
Pennsylvania	Southwark	22	0	0	0	0	0	0	0	0	0
Pennsylvania	Springdale	77	0	0	0	0	0	0	0	0	0
Pennsylvania	Springdale	86	0	0	0	0	0	0	0	0	0
Pennsylvania	Sunbury	3	4,554	115	43	0	3,995	4,554	115	43	4,020
Pennsylvania	Sunbury	4	5,844	148	136	0	5,206	5,844	148	136	5,240
Pennsylvania	Sunbury	1A	2,077	52	0	0	1,802	2,077	52	0	1,815
Pennsylvania	Sunbury	1B	2,076	52	0	0	1,801	2,076	52	0	1,814
Pennsylvania	Sunbury	2A	2,077	52	0	0	1,802	2,077	52	0	1,815
Pennsylvania	Sunbury	2B	2,077	52	0	0	1,802	2,077	52	0	1,815
Pennsylvania	Titus	1	2,169	55	0	252	2,134	2,169	55	0	1,894
Pennsylvania	Titus	2	2,486	63	0	97	2,253	2,486	63	0	2,171
Pennsylvania	Titus	3	2,275	58	0	204	2,177	2,275	57	0	1,988
Pennsylvania	Warren	1	823	21	0	0	714	823	21	0	719

TABLE 2. -- PHASE II ALLOWANCE ALLOCATIONS

State	Plant Name	Boiler [1]	Allowances for years 2000–2009					Allowances for years 2010 and thereafter			
			(A) [2] Unadjusted basic	(B) Special allowance reserve deduction	(C) Additional basic (§405(a)(3))	(D) Total Bonus	(E) [3] Total annual phase II	(F) [2] Unadjusted basic	(G) Special allowance reserve deduction	(H) Additional basic (§ 405(a)(3))	(I) [4] Total annual phase II
Pennsylvania	Warren	2	823	21	0	0	714	823	21	0	719
Pennsylvania	Warren	3	845	21	0	0	733	845	21	0	738
Pennsylvania	Warren	4	845	21	0	0	733	845	21	0	738
Pennsylvania	Williamsburg	11	1,068	27	0	0	927	1,068	27	0	933
Rhode Island	Manchester Street	6	749	19	0	37	687	749	19	0	654
Rhode Island	Manchester Street	7	497	13	0	24	454	497	13	0	434
Rhode Island	Manchester Street	12	553	14	0	28	507	553	14	0	483
Rhode Island	South Street	121	1,195	30	0	41	1,080	1,195	30	0	1,044
Rhode Island	South Street	122	1,083	28	0	0	939	1,083	28	0	946
South Carolina	Canadys Steam	CAN1	3,350	85	0	316	3,223	3,350	85	0	2,926
South Carolina	Canadys Steam	CAN2	2,634	67	0	674	2,960	2,634	66	0	2,301
South Carolina	Canadys Steam	CAN3	3,542	90	0	1,124	4,197	3,542	89	0	3,094
South Carolina	Cross	1	6,401	162	0	0	5,555	6,401	162	0	5,591
South Carolina	Cross	2	10,216	259	0	0	8,864	10,215	258	0	8,923
South Carolina	Dolphus M Grainger	1	3,558	90	0	0	3,087	3,558	90	0	3,108
South Carolina	Dolphus M Grainger	2	316	8	0	0	274	316	8	0	276
South Carolina	H B Robinson	1	3,317	84	0	912	3,790	3,317	84	0	2,897
South Carolina	Hagood	**4	1,084	27	0	0	942	1,084	27	0	947
South Carolina	Hagood	HAG1	3	0	0	0	3	3	0	0	3
South Carolina	Hagood	HAG2	2	0	0	449	451	2	0	0	2
South Carolina	Hagood	HAG3	7	0	0	781	787	7	0	0	6
South Carolina	Jefferies	1	0	0	0	0	0	0	0	0	0
South Carolina	Jefferies	2	1	0	0	0	1	1	0	0	1
South Carolina	Jefferies	3	3,854	98	0	514	3,857	3,854	97	0	3,367
South Carolina	Jefferies	4	3,599	91	0	593	3,716	3,599	91	0	3,143
South Carolina	Mcmeekin	MCM1	4,662	118	0	0	4,045	4,662	118	0	4,072
South Carolina	Mcmeekin	MCM2	4,614	117	0	0	4,004	4,614	116	0	4,031
South Carolina	Ne 4 -- 7210	**ST1	0	0	0	0	0	0	0	0	0
South Carolina	Urquhart	URQ1	2,509	64	0	0	2,178	2,509	63	0	2,192
South Carolina	Urquhart	URQ2	1,922	49	0	245	1,912	1,922	49	0	1,678
South Carolina	Urquhart	URQ3	3,329	84	0	0	2,889	3,329	84	0	2,908
South Carolina	W S Lee	1	1,027	26	0	1,234	2,125	1,027	26	0	897
South Carolina	W S Lee	2	1,292	33	0	1,147	2,267	1,292	33	0	1,126
South Carolina	W S Lee	3	2,022	51	0	1,674	3,429	2,022	51	0	1,766
South Carolina	Wateree	WAT1	11,104	281	0	0	9,635	11,104	280	0	9,699
South Carolina	Wateree	WAT2	10,292	261	0	263	9,193	10,292	260	0	8,990
South Carolina	Williams	WIL1	18,079	458	0	0	15,687	18,079	456	0	15,792
South Carolina	Winyah	1	8,655	219	0	0	7,510	8,655	218	0	7,560
South Carolina	Winyah	2	5,849	148	0	1,115	6,190	5,849	148	0	5,109
South Carolina	Winyah	3	2,862	72	0	1,106	3,590	2,862	72	0	2,500
South Carolina	Winyah	4	3,916	99	0	0	3,398	3,916	99	0	3,420
South Dakota	Big Stone	1	14,799	375	0	764	13,605	14,799	374	0	12,926
South Dakota	Huron	**2A	91	2	0	0	80	91	2	0	80
South Dakota	Huron	**2B	117	3	0	0	101	117	3	0	102
South Dakota	Mobile	**2	20	1	0	0	17	20	1	0	17
South Dakota	Pathfinder	11	12	0	0	0	11	12	0	0	11
South Dakota	Pathfinder	12	2	0	0	0	2	2	0	0	2

TABLE 2. — PHASE II ALLOWANCE ALLOCATIONS

State	Plant Name	Boiler [1]	Allowances for years 2000–2009					Allowances for years 2010 and thereafter			
			(A) [2] Unadjusted basic	(B) Special allowance reserve deduction	(C) Additional basic (§405(a)(3))	(D) Total Bonus	(E) [3] Total annual phase II	(F) [2] Unadjusted basic	(G) Special allowance reserve deduction	(H) Additional basic (§ 405(a)(3))	(I) [4] Total annual phase II
South Dakota	Pathfinder	13	2	0	0	0	2	2	0	0	2
Tennessee	Allen	1	7,355	186	171	0	6,554	7,355	186	171	6,595
Tennessee	Allen	2	8,049	204	187	0	7,171	8,049	203	187	7,218
Tennessee	Allen	3	7,520	190	175	0	6,701	7,520	190	175	6,743
Tennessee	Bull Run	1	26,623	725	0	0	24,834	26,623	724	0	25,000
Tennessee	Cumberland	1	41,616	1,054	970	0	37,077	41,616	1,052	970	37,320
Tennessee	Cumberland	2	45,523	1,153	1,061	0	40,559	45,523	1,150	1,061	40,824
Tennessee	Gallatin	1	8,465	214	197	0	7,542	8,465	214	197	7,591
Tennessee	Gallatin	2	8,308	210	193	0	7,403	8,308	210	193	7,450
Tennessee	Gallatin	3	9,611	243	224	0	8,564	9,611	243	224	8,619
Tennessee	Gallatin	4	10,204	258	238	0	9,092	10,204	258	238	9,150
Tennessee	John Sevier	1	7,266	184	0	0	6,306	7,266	183	0	6,349
Tennessee	John Sevier	2	7,265	184	0	0	6,304	7,265	183	0	6,346
Tennessee	John Sevier	3	7,450	188	0	0	6,463	7,450	188	0	6,507
Tennessee	John Sevier	4	7,620	193	0	0	6,612	7,620	192	0	6,656
Tennessee	Johnsonville	1	3,738	95	87	0	3,330	3,738	94	87	3,352
Tennessee	Johnsonville	2	3,857	98	90	0	3,436	3,857	97	90	3,459
Tennessee	Johnsonville	3	4,037	102	94	0	3,596	4,037	102	94	3,620
Tennessee	Johnsonville	4	3,833	97	89	0	3,415	3,833	97	89	3,437
Tennessee	Johnsonville	5	3,954	100	92	0	3,523	3,954	100	92	3,546
Tennessee	Johnsonville	6	3,789	96	88	0	3,375	3,789	96	88	3,397
Tennessee	Johnsonville	7	4,309	109	100	0	3,839	4,309	109	100	3,864
Tennessee	Johnsonville	8	4,176	106	97	0	3,722	4,176	105	97	3,747
Tennessee	Johnsonville	9	3,397	86	79	0	3,027	3,397	86	79	3,046
Tennessee	Johnsonville	10	3,625	92	84	0	3,230	3,625	92	84	3,250
Tennessee	Kingston	1	4,743	120	0	0	4,116	4,743	120	0	4,143
Tennessee	Kingston	2	4,524	115	0	33	3,958	4,524	114	0	3,952
Tennessee	Kingston	3	5,430	137	0	0	4,713	5,430	137	0	4,743
Tennessee	Kingston	4	5,761	146	0	0	4,999	5,761	145	0	5,032
Tennessee	Kingston	5	7,079	179	0	0	6,142	7,079	179	0	6,183
Tennessee	Kingston	6	7,253	184	0	0	6,293	7,253	183	0	6,335
Tennessee	Kingston	7	7,072	179	0	0	6,137	7,072	179	0	6,177
Tennessee	Kingston	8	6,609	167	0	0	5,736	6,609	167	0	5,773
Tennessee	Kingston	9	7,319	185	0	0	6,351	7,319	185	0	6,393
Tennessee	Watts Bar	A	0	0	0	0	0	0	0	0	0
Tennessee	Watts Bar	B	0	0	0	0	0	0	0	0	0
Tennessee	Watts Bar	C	0	0	0	0	0	0	0	0	0
Tennessee	Watts Bar	D	0	0	0	0	0	0	0	0	0
Texas	Barney M Davis	1	29	1	0	470	495	470	12	0	410
Texas	Barney M Davis	2	26	1	0	376	396	438	11	0	363
Texas	Big Brown	1	22,998	582	0	856	20,813	22,998	581	0	20,068
Texas	Big Brown	2	21,999	557	0	625	19,714	21,999	555	0	19,216
Texas	Bryan	6	14	0	0	6	19	26	1	0	22
Texas	C E Newman	BW5	0	0	0	3	3	4	0	0	4
Texas	Cedar Bayou	CBY1	16	0	0	799	813	801	20	0	700
Texas	Cedar Bayou	CBY2	6	0	0	916	921	978	25	0	854
Texas	Cedar Bayou	CBY3	17	0	0	710	725	808	20	0	704

TABLE 2. -- PHASE II ALLOWANCE ALLOCATIONS

State	Plant Name	Boiler [1]	Allowances for years 2000–2009					Allowances for years 2010 and thereafter			
			(A) [2] Unadjusted basic	(B) Special allowance reserve deduction	(C) Additional basic (§405(a)(3))	(D) Total Bonus	(E) [3] Total annual phase II	(F) [2] Unadjusted basic	(G) Special allowance reserve deduction	(H) Additional basic (§ 405(a)(3))	(I) [4] Total annual phase II
Texas	Coleto Creek	1	15,750	399	0	938	14,604	15,750	398	0	13,757
Texas	Coleto Creek	**2	0	0	0	0	0	0	0	0	0
Texas	Collin	1	54	1	0	44	92	107	3	0	93
Texas	Concho	2	0	0	0	4	4	0	0	0	0
Texas	Concho	4	0	0	0	0	0	0	0	0	0
Texas	Concho	5	0	0	0	0	0	0	0	0	0
Texas	Concho	6	0	0	0	0	0	0	0	0	0
Texas	Concho	7	8	0	0	0	7	14	0	0	13
Texas	Dallas	3	7	0	0	21	27	27	1	0	23
Texas	Dallas	9	8	0	0	19	26	29	1	0	25
Texas	Dansby	1	34	1	0	64	94	121	3	0	106
Texas	Decker Creek	1	2	0	0	126	128	171	4	0	150
Texas	Decker Creek	2	2	0	0	193	195	206	5	0	180
Texas	Decordova	1	29	1	0	992	1,017	1,004	25	0	877
Texas	Deepwater	DWP1	0	0	0	0	0	0	0	0	0
Texas	Deepwater	DWP2	0	0	0	0	0	0	0	0	0
Texas	Deepwater	DWP3	0	0	0	0	0	0	0	0	0
Texas	Deepwater	DWP4	0	0	0	0	0	0	0	0	0
Texas	Deepwater	DWP5	0	0	0	0	0	0	0	0	0
Texas	Deepwater	DWP6	0	0	0	0	0	0	0	0	0
Texas	Deepwater	DWP9	1	0	0	27	28	42	1	0	37
Texas	E S Joslin	1	2	0	0	257	259	239	6	0	209
Texas	Eagle Mountain	1	7	0	0	46	52	49	1	0	43
Texas	Eagle Mountain	2	24	1	0	119	140	132	3	0	116
Texas	Eagle Mountain	3	2	0	0	97	99	124	3	0	108
Texas	Forest Grove	**1	0	0	0	0	0	0	0	0	0
Texas	Fort Phantom	1	8	0	0	119	126	147	4	0	128
Texas	Fort Phantom	2	37	1	0	155	187	220	6	0	192
Texas	Generic Stat	**1	0	0	0	0	0	0	0	0	0
Texas	Generic Stat	**2	0	0	0	0	0	0	0	0	0
Texas	Gibbons Creek	1	15,861	401	0	534	14,298	15,861	400	0	13,854
Texas	Graham	1	4	0	0	231	235	222	6	0	194
Texas	Graham	2	44	1	0	457	498	463	12	0	404
Texas	Greens Bayou	GBY1	0	0	0	1	1	3	0	0	3
Texas	Greens Bayou	GBY2	0	0	0	2	2	3	0	0	3
Texas	Greens Bayou	GBY3	0	0	0	15	15	7	0	0	6
Texas	Greens Bayou	GBY4	0	0	0	19	19	9	0	0	8
Texas	Greens Bayou	GBY5	31	1	0	324	351	352	9	0	307
Texas	Gt 98	**1	0	0	0	0	0	0	0	0	0
Texas	Gt 98	**2	0	0	0	0	0	0	0	0	0
Texas	Gt 99	**1	0	0	0	0	0	0	0	0	0
Texas	Gt 99	**2	0	0	0	0	0	0	0	0	0
Texas	Gt 99	**3	0	0	0	0	0	0	0	0	0
Texas	Handley	2	0	0	0	21	21	17	0	0	15
Texas	Handley	3	21	1	0	404	422	448	11	0	382
Texas	Handley	4	16	0	0	104	118	128	3	0	112
Texas	Handley	5	22	1	0	117	138	145	4	0	126

TABLE 2. -- PHASE II ALLOWANCE ALLOCATIONS

State	Plant Name	Boiler [1]	Allowances for years 2000–2009					Allowances for years 2010 and thereafter			
			(A) [2] Unadjusted basic	(B) Special allowance reserve deduction	(C) Additional basic (§405(a)(3))	(D) Total Bonus	(E) [3] Total annual phase II	(F) [2] Unadjusted basic	(G) Special allowance reserve deduction	(H) Additional basic (§ 405(a)(3))	(I) [4] Total annual phase II
Texas	Handley	1A	0	0	0	7	7	3	0	0	3
Texas	Handley	1B	0	0	0	0	0	3	0	0	3
Texas	Harrington Station	061B	8,796	223	0	536	8,167	8,796	222	0	7,683
Texas	Harrington Station	062B	9,350	237	0	537	8,651	9,350	236	0	8,167
Texas	Harrington Station	063B	9,971	252	0	542	9,195	9,971	252	0	8,709
Texas	Hiram Clarke	HOC1	0	0	0	0	0	0	0	0	0
Texas	Hiram Clarke	HOC2	0	0	0	0	0	0	0	0	0
Texas	Hiram Clarke	HOC3	0	0	0	3	3	2	0	0	2
Texas	Hiram Clarke	HOC4	0	0	0	2	2	1	0	0	1
Texas	Holly Ave	1	1	0	0	58	59	81	2	0	71
Texas	Holly Ave	2	1	0	0	70	71	87	2	0	76
Texas	Holly Street	1	0	0	0	49	49	19	0	0	17
Texas	Holly Street	2	0	0	0	31	31	21	1	0	18
Texas	Holly Street	3	1	0	0	67	68	75	2	0	65
Texas	Holly Street	4	2	0	0	41	43	93	2	0	82
Texas	J K Spruce	**1	7,647	194	0	0	8,635	7,647	193	0	8,679
Texas	J K Spruce	**2	0	0	0	0	0	0	0	0	0
Texas	J L Bates	1	1	0	0	47	48	52	1	0	46
Texas	J L Bates	2	2	0	0	122	124	115	3	0	100
Texas	J T Deely	1	14,339	363	0	568	13,029	14,339	362	0	12,525
Texas	J T Deely	2	14,958	379	0	615	13,594	14,958	378	0	13,065
Texas	Jones Station	151B	2	0	0	123	125	84	2	0	73
Texas	Jones Station	152B	4	0	0	89	93	77	2	0	87
Texas	Knox Lee	2	0	0	0	0	0	0	0	0	0
Texas	Knox Lee	3	0	0	0	5	5	2	0	0	2
Texas	Knox Lee	4	0	0	0	29	29	14	0	0	13
Texas	Knox Lee	5	2	0	0	249	251	170	4	0	149
Texas	La Palma	7	2	0	0	176	178	174	4	0	152
Texas	Lake Creek	1	1	0	0	38	39	33	1	0	29
Texas	Lake Creek	2	4	0	0	187	191	161	4	0	141
Texas	Lake Hubbard	1	25	1	0	148	170	229	6	0	200
Texas	Lake Hubbard	2	93	2	0	521	603	660	17	0	576
Texas	Laredo	1	0	0	0	15	15	16	0	0	16
Texas	Laredo	2	0	0	0	14	14	16	0	0	14
Texas	Laredo	3	6	0	0	60	65	132	3	0	116
Texas	Leon Creek	3	0	0	0	2	2	2	0	0	2
Texas	Leon Creek	4	0	0	0	10	10	9	0	0	8
Texas	Lewis Creek	1	4	0	0	313	317	301	8	0	263
Texas	Lewis Creek	2	4	0	0	267	271	293	7	0	256
Texas	Limestone	LIM1	27,065	685	0	102	23,565	27,065	683	0	23,641
Texas	Limestone	LIM2	16,178	409	0	0	14,038	16,178	408	0	14,131
Texas	Lon C Hill	1	0	0	0	9	9	8	0	0	7
Texas	Lon C Hill	2	0	0	0	10	10	8	0	0	7
Texas	Lon C Hill	3	2	0	0	177	179	104	3	0	90
Texas	Lon C Hill	4	4	0	0	193	197	272	7	0	237
Texas	Lone Star	1	0	0	0	0	0	11	0	0	10
Texas	Malakoff	**1	1,758	45	0	0	1,526	1,758	44	0	1,537

TABLE 2. -- PHASE II ALLOWANCE ALLOCATIONS

State	Plant Name	Boiler [1]	Allowances for years 2000-2009					Allowances for years 2010 and thereafter			
			(A) [2] Unadjusted basic	(B) Special allowance reserve deduction	(C) Additional basic (§405(a)(3))	(D) Total Bonus	(E) [3] Total annual phase II	(F) [2] Unadjusted basic	(G) Special allowance reserve deduction	(H) Additional basic (§ 405(a)(3))	(I) [4] Total annual phase II
Texas	Malakoff	**2	0	0	0	0	0	0	0	0	0
Texas	Martin Lake	1	36,736	931	0	1,084	32,956	36,736	926	0	32,066
Texas	Martin Lake	2	35,617	903	0	1,096	32,000	35,617	900	0	31,110
Texas	Martin Lake	3	36,994	937	0	1,064	33,161	36,994	935	0	32,313
Texas	Mission Road	3	0	0	0	3	3	9	0	0	8
Texas	Monticello	1	25,964	657	0	919	23,447	25,964	655	0	22,679
Texas	Monticello	2	25,166	637	0	915	22,751	25,166	635	0	21,962
Texas	Monticello	3	38,836	984	0	1,249	34,943	38,836	981	0	33,922
Texas	Morgan Creek	3	0	0	0	8	8	7	0	0	6
Texas	Morgan Creek	4	13	0	0	60	72	64	2	0	56
Texas	Morgan Creek	5	17	0	0	139	154	167	5	0	163
Texas	Morgan Creek	6	218	6	0	846	834	888	22	0	774
Texas	Mountain Creek	2	1	0	0	3	4	3	0	0	3
Texas	Mountain Creek	6	22	1	0	44	63	64	2	0	73
Texas	Mountain Creek	7	4	0	0	58	62	67	2	0	58
Texas	Mountain Creek	8	59	1	0	475	527	610	15	0	533
Texas	Mountain Creek	3A	2	0	0	9	11	5	0	0	4
Texas	Mountain Creek	3B	2	0	0	0	2	5	0	0	4
Texas	Na 1 -- 7218	**1	0	0	0	0	0	0	0	0	0
Texas	Na 1 -- 7218	**2	0	0	0	0	0	0	0	0	0
Texas	Na 1 -- 7219	**1	0	0	0	0	0	0	0	0	0
Texas	Na 1 -- 7219	**2	0	0	0	0	0	0	0	0	0
Texas	Na 2 -- 4274	**NA1	0	0	0	0	0	0	0	0	0
Texas	Neches	11	0	0	0	0	0	0	0	0	0
Texas	Neches	13	0	0	0	0	0	0	0	0	0
Texas	Neches	15	0	0	0	0	0	0	0	0	0
Texas	Neches	18	0	0	0	0	0	0	0	0	0
Texas	Newman	1	0	0	0	14	14	21	1	0	18
Texas	Newman	2	1	0	0	28	29	47	1	0	41
Texas	Newman	3	1	0	0	87	88	107	3	0	93
Texas	Newman	**4	2	0	0	97	99	157	4	0	137
Texas	Nichols Station	141B	1	0	0	76	77	93	2	0	82
Texas	Nichols Station	142B	1	0	0	85	86	87	2	0	76
Texas	Nichols Station	143B	0	0	0	50	50	36	1	0	31
Texas	North Lake	1	45	1	0	91	131	148	4	0	129
Texas	North Lake	2	43	1	0	112	150	161	4	0	141
Texas	North Lake	3	64	2	0	238	294	291	7	0	255
Texas	North Main	4	9	0	0	34	42	40	1	0	35
Texas	North Texas	3	0	0	0	13	13	9	0	0	8
Texas	Nueces Bay	5	0	0	0	1	1	1	0	0	1
Texas	Nueces Bay	6	2	0	0	138	140	130	3	0	114
Texas	Nueces Bay	7	7	0	0	489	495	491	12	0	429
Texas	O W Sommers	1	83	2	0	405	478	544	14	0	475
Texas	O W Sommers	2	4	0	0	184	188	367	9	0	321
Texas	Oak Creek	1	16	0	0	92	108	122	3	0	107
Texas	Oklaunion	1	8,980	227	0	0	7,793	8,980	227	0	7,843
Texas	P H Robinson	PHR1	6	0	0	639	644	497	13	0	434

TABLE 2. -- PHASE II ALLOWANCE ALLOCATIONS

State	Plant Name	Boiler [1]	Allowances for years 2000–2009					Allowances for years 2010 and thereafter			
			(A) [2] Unadjusted basic	(B) Special allowance reserve deduction	(C) Additional basic (§405(a)(3))	(D) Total Bonus	(E) [3] Total annual phase II	(F) [2] Unadjusted basic	(G) Special allowance reserve deduction	(H) Additional basic (§ 405(a)(3))	(I) [4] Total annual phase II
Texas	P H Robinson	PHR2	7	0	0	487	493	560	14	0	489
Texas	P H Robinson	PHR3	7	0	0	679	685	578	15	0	504
Texas	P H Robinson	PHR4	19	0	0	779	798	707	18	0	617
Texas	Paint Creek	1	3	0	0	8	11	11	0	0	10
Texas	Paint Creek	2	3	0	0	8	11	12	0	0	11
Texas	Paint Creek	3	21	1	0	10	28	61	2	0	53
Texas	Paint Creek	4	1	0	0	104	105	118	3	0	103
Texas	Parkdale	1	11	0	0	24	34	41	1	0	38
Texas	Parkdale	2	16	0	0	48	62	75	2	0	65
Texas	Parkdale	3	21	1	0	43	61	87	2	0	76
Texas	Permian Basin	5	2	0	0	101	103	120	3	0	105
Texas	Permian Basin	6	316	8	0	526	800	945	24	0	825
Texas	Pirkey	1	22,597	572	0	757	20,364	22,597	570	0	19,738
Texas	Plant X	111B	0	0	0	0	0	0	0	0	0
Texas	Plant X	112B	0	0	0	2	2	1	0	0	1
Texas	Plant X	113B	0	0	0	89	89	34	1	0	30
Texas	Plant X	114B	0	0	0	0	0	3	0	0	3
Texas	Powerlane Plant	2	522	13	0	2	454	533	13	0	466
Texas	Powerlane Plant	3	39	1	0	3	37	43	1	0	38
Texas	R W Miller	1	2	0	0	53	55	62	2	0	54
Texas	R W Miller	2	0	0	0	98	98	112	3	0	98
Texas	R W Miller	3	1	0	0	217	218	206	5	0	180
Texas	Ray Olinger	BW2	5	0	0	55	60	60	2	0	52
Texas	Ray Olinger	BW3	9	0	0	71	79	96	2	0	86
Texas	Ray Olinger	CE1	9	0	0	34	42	38	1	0	33
Texas	Rio Pecos	5	1	0	0	63	64	79	2	0	69
Texas	Rio Pecos	6	2	0	0	177	179	196	5	0	171
Texas	River Crest	1	32	1	0	33	61	80	2	0	70
Texas	Sabine	1	3	0	0	149	152	233	6	0	203
Texas	Sabine	2	2	0	0	162	164	225	6	0	196
Texas	Sabine	3	7	0	0	569	575	574	14	0	502
Texas	Sabine	4	8	0	0	496	503	714	18	0	624
Texas	Sabine	5	4	0	0	318	322	447	11	0	391
Texas	Sam Bertron	SRB1	0	0	0	57	57	55	1	0	48
Texas	Sam Bertron	SRB2	0	0	0	18	18	38	1	0	33
Texas	Sam Bertron	SRB3	7	0	0	114	120	103	3	0	90
Texas	Sam Bertron	SRB4	3	0	0	76	79	90	2	0	79
Texas	Sam Seymour	1	17,210	436	0	849	15,782	17,210	434	0	15,033
Texas	Sam Seymour	2	18,748	475	0	986	17,255	18,748	473	0	16,376
Texas	Sam Seymour	3	11,992	304	0	0	10,405	11,992	303	0	10,474
Texas	San Angelo	2	2	0	0	159	161	187	5	0	163
Texas	San Miguel	**2	0	0	0	0	0	0	0	0	0
Texas	San Miguel	SM-1	18,994	481	0	564	17,075	18,994	479	0	16,591
Texas	Sandow	4	28,423	719	0	826	25,488	28,423	718	0	24,828
Texas	Seaholm	9	1	0	0	3	4	3	0	0	3
Texas	Sim Gideon	1	1	0	0	46	47	58	1	0	51
Texas	Sim Gideon	2	1	0	0	55	56	66	2	0	57

TABLE 2. -- PHASE II ALLOWANCE ALLOCATIONS

State	Plant Name	Boiler [1]	Allowances for years 2000–2009					Allowances for years 2010 and thereafter			
			(A) [2] Unadjusted basic	(B) Special allowance reserve deduction	(C) Additional basic (§405(a)(3))	(D) Total Bonus	(E) [3] Total annual phase II	(F) [2] Unadjusted basic	(G) Special allowance reserve deduction	(H) Additional basic (§ 405(a)(3))	(I) [4] Total annual phase II
Texas	Sim Gideon	3	7	0	0	271	277	366	9	0	320
Texas	Spencer	4	6	0	0	12	19	20	1	0	17
Texas	Spencer	5	11	0	0	13	23	26	1	0	22
Texas	Stryker Creek	1	19	0	0	153	170	157	4	0	137
Texas	Stryker Creek	2	25	1	0	503	525	642	16	0	561
Texas	T C Ferguson	1	3	0	0	250	253	289	7	0	253
Texas	T H Wharton	THW1	0	0	0	7	7	6	0	0	5
Texas	T H Wharton	THW2	5	0	0	92	97	93	2	0	82
Texas	Tap One	U1	2,426	81	0	0	2,106	2,426	81	0	2,119
Texas	Tap One	U2	4,000	101	0	0	3,472	4,000	101	0	3,494
Texas	Tap One	**3	0	0	0	0	0	0	0	0	0
Texas	Tap One	**4	0	0	0	0	0	0	0	0	0
Texas	Tolk Station	171B	16,035	406	0	748	14,662	16,035	405	0	14,008
Texas	Tolk Station	172B	15,884	402	0	542	14,326	15,884	401	0	13,674
Texas	Tradinghouse	1	19	0	0	575	592	589	15	0	514
Texas	Tradinghouse	2	45	1	0	954	994	1,030	26	0	900
Texas	Trinidad	7	1	0	0	5	6	4	0	0	4
Texas	Trinidad	8	1	0	0	0	1	3	0	0	3
Texas	Trinidad	9	2	0	0	133	135	131	3	0	115
Texas	Twin Oak	1	9,156	232	0	0	7,947	9,156	231	0	7,999
Texas	Twin Oak	2	6,457	163	0	0	5,603	6,457	163	0	5,640
Texas	V H Braunig	1	2	0	0	75	77	140	4	0	122
Texas	V H Braunig	2	3	0	0	118	121	160	4	0	140
Texas	V H Braunig	3	5	0	0	411	416	447	11	0	391
Texas	Valley	1	7	0	0	71	77	111	3	0	97
Texas	Valley	2	46	1	0	470	516	616	16	0	538
Texas	Valley	3	2	0	0	122	124	146	4	0	129
Texas	Victoria	5	7	0	0	0	6	7	0	0	6
Texas	Victoria	6	0	0	0	6	6	4	0	0	4
Texas	Victoria	7	1	0	0	109	110	116	3	0	101
Texas	Victoria	8	3	0	0	235	238	255	6	0	223
Texas	W A Parish	WAP1	1	0	0	56	57	56	1	0	51
Texas	W A Parish	WAP2	1	0	0	55	56	51	1	0	45
Texas	W A Parish	WAP3	0	0	0	245	245	181	5	0	156
Texas	W A Parish	WAP4	7	0	0	551	557	583	15	0	509
Texas	W A Parish	WAP5	24,960	632	0	1,036	22,693	24,960	630	0	21,802
Texas	W A Parish	WAP6	22,569	572	0	992	20,593	22,569	570	0	19,731
Texas	W A Parish	WAP7	16,386	415	0	802	15,020	16,386	414	0	14,312
Texas	W A Parish	WAP8	7,325	185	0	676	7,233	7,325	185	0	6,398
Texas	W B Tuttle	1	0	0	0	2	2	3	0	0	3
Texas	W B Tuttle	2	0	0	0	19	19	20	1	0	17
Texas	W B Tuttle	3	0	0	0	11	11	15	0	0	13
Texas	W B Tuttle	4	1	0	0	47	48	60	2	0	52
Texas	Webster	WEB1	0	0	0	14	14	6	0	0	5
Texas	Webster	WEB2	0	0	0	17	17	8	0	0	7
Texas	Webster	WEB3	4	0	0	339	343	365	9	0	319
Texas	Welsh	1	14,569	368	0	579	13,221	14,569	368	0	12,725

TABLE 2. — — PHASE II ALLOWANCE ALLOCATIONS

State	Plant Name	Boiler [1]	Allowances for years 2000–2009					Allowances for years 2010 and thereafter			
			(A) [2] Unadjusted basic	(B) Special allowance reserve deduction	(C) Additional basic (§405(a)(3))	(D) Total Bonus	(E) [3] Total annual phase II	(F) [2] Unadjusted basic	(G) Special allowance reserve deduction	(H) Additional basic (§ 405(a)(3))	(I) [4] Total annual phase II
Texas	Welsh	2	14,069	356	0	533	12,741	14,069	355	0	12,269
Texas	Welsh	3	16,560	419	0	727	15,097	16,560	418	0	14,465
Texas	Wilkes	1	8	0	0	23	30	66	2	0	57
Texas	Wilkes	2	1	0	0	117	118	106	3	0	92
Texas	Wilkes	3	1	0	0	128	129	84	2	0	73
Utah	Bonanza	1–1	10,059	255	0	1,982	10,709	10,059	254	0	8,786
Utah	Carbon	1	2,186	55	0	0	1,897	2,186	55	0	1,910
Utah	Carbon	2	2,855	72	0	0	2,478	2,855	72	0	2,494
Utah	Gadsby	1	28	1	0	0	24	28	1	0	24
Utah	Gadsby	2	466	12	0	1,282	1,667	466	12	0	407
Utah	Gadsby	3	1,734	44	0	747	2,252	1,734	44	0	1,514
Utah	Hale	1	1	0	0	0	1	1	0	0	1
Utah	Hunter (Emery)	1	8,517	216	0	0	7,390	8,517	215	0	7,439
Utah	Hunter (Emery)	2	9,096	230	0	0	7,893	9,096	230	0	7,945
Utah	Hunter (Emery)	3	12,859	326	0	0	11,156	12,859	325	0	11,232
Utah	Huntington	1	9,057	229	0	0	7,859	9,057	229	0	7,911
Utah	Huntington	2	11,145	282	0	0	9,671	11,145	281	0	9,735
Utah	Intermountain	1SGA	3,285	83	0	0	2,850	3,285	83	0	2,869
Utah	Intermountain	2SGA	3,306	84	0	0	2,870	3,306	84	0	2,889
Vermont	J C Mcnell	1	43	1	0	66	104	43	1	0	36
Virginia	Bremo Bluff	3	2,017	51	0	264	2,015	2,017	51	0	1,762
Virginia	Bremo Bluff	4	5,897	149	0	0	5,117	5,897	149	0	5,151
Virginia	Chesapeake	1	871	22	0	1,355	2,111	871	22	0	761
Virginia	Chesapeake	2	1,141	29	0	1,211	2,201	1,141	29	0	996
Virginia	Chesapeake	3	5,210	132	0	0	4,521	5,210	132	0	4,550
Virginia	Chesapeake	4	6,685	169	0	22	5,823	6,685	169	0	5,839
Virginia	Chesterfield	3	2,118	54	0	707	2,545	2,118	53	0	1,850
Virginia	Chesterfield	4	5,336	135	0	0	4,630	5,336	135	0	4,661
Virginia	Chesterfield	5	10,474	265	0	0	9,088	10,474	264	0	9,149
Virginia	Chesterfield	6	18,788	476	0	697	16,999	18,788	474	0	16,411
Virginia	Chesterfield	**6A	1,585	40	0	0	1,375	1,585	40	0	1,364
Virginia	Chesterfield	**8B	471	12	0	0	409	471	12	0	411
Virginia	Clinch River	1	6,048	153	0	55	5,303	6,048	153	0	5,262
Virginia	Clinch River	2	6,985	177	0	0	6,061	6,985	176	0	6,102
Virginia	Clinch River	3	6,458	163	0	0	5,604	6,458	163	0	5,641
Virginia	Clover	1	3,357	85	0	0	2,913	3,357	85	0	2,932
Virginia	Clover	2	3,357	85	0	0	2,913	3,357	85	0	2,932
Virginia	Glen Lyn	6	5,990	152	0	293	5,491	5,990	151	0	5,232
Virginia	Glen Lyn	51	930	24	0	339	1,145	930	23	0	813
Virginia	Glen Lyn	52	896	23	0	326	1,106	896	23	0	784
Virginia	Possum Point	1	0	0	0	0	0	0	0	0	0
Virginia	Possum Point	2	0	0	0	0	0	0	0	0	0
Virginia	Possum Point	3	2,570	65	0	398	2,628	2,570	65	0	2,245
Virginia	Possum Point	4	7,664	194	0	0	6,666	7,664	194	0	6,712
Virginia	Possum Point	5	4,955	125	0	0	4,300	4,955	125	0	4,328
Virginia	Potomac River	1	1,883	48	0	667	2,320	1,883	48	0	1,644
Virginia	Potomac River	2	1,912	48	0	636	2,295	1,912	48	0	1,670

TABLE 2. -- PHASE II ALLOWANCE ALLOCATIONS

State	Plant Name	Boiler [1]	Allowances for years 2000–2009					Allowances for years 2010 and thereafter			
			(A) [2] Unadjusted basic	(B) Special allowance reserve deduction	(C) Additional basic (§405(a)(3))	(D) Total Bonus	(E) [3] Total annual phase II	(F) [2] Unadjusted basic	(G) Special allowance reserve deduction	(H) Additional basic (§ 405(a)(3))	(I) [4] Total annual phase II
Virginia	Potomac River	3	3,150	80	0	0	2,733	3,150	80	0	2,751
Virginia	Potomac River	4	3,471	88	0	0	3,011	3,471	88	0	3,031
Virginia	Potomac River	5	3,326	84	0	0	2,888	3,326	84	0	2,907
Virginia	Yorktown	1	5,337	135	0	0	4,631	5,337	135	0	4,661
Virginia	Yorktown	2	5,137	130	0	178	4,635	5,137	130	0	4,487
Virginia	Yorktown	3	7,205	182	0	0	6,253	7,205	182	0	6,293
Washington	Centralia	BW21	21,797	552	0	0	18,914	21,797	550	0	19,039
Washington	Centralia	BW22	23,240	588	0	0	20,164	23,240	587	0	20,299
Washington	Kettle Falls	1	1	0	0	95	96	96	2	0	64
Washington	Shuffleton	1	0	0	0	0	0	0	0	0	0
Washington	Shuffleton	2	0	0	0	0	0	0	0	0	0
Washington	Shuffleton	3	0	0	0	0	0	0	0	0	0
West Virginia	Albright	1	2,256	57	0	0	1,956	2,256	57	0	1,970
West Virginia	Albright	2	2,347	59	0	0	2,037	2,347	59	0	2,050
West Virginia	Albright	3	5,119	130	119	0	4,560	5,119	129	119	4,591
West Virginia	Fort Martin	1	19,963	505	465	0	17,787	19,963	504	465	17,902
West Virginia	Fort Martin	2	19,776	501	460	0	17,620	19,776	499	460	17,734
West Virginia	Harrison	1	23,337	591	543	0	20,792	23,337	589	543	20,927
West Virginia	Harrison	2	22,152	561	516	0	19,736	22,152	559	516	19,865
West Virginia	Harrison	3	19,922	504	464	0	17,750	19,922	503	464	17,865
West Virginia	John E Amos	1	25,814	653	0	0	22,396	25,814	652	0	22,547
West Virginia	John E Amos	2	29,597	750	0	0	25,678	29,597	746	0	25,851
West Virginia	John E Amos	3	47,436	1,202	0	0	41,159	47,436	1,199	0	41,435
West Virginia	Kammer	1	8,996	228	209	0	8,015	8,996	227	209	8,067
West Virginia	Kammer	2	9,339	236	217	0	8,322	9,339	236	217	8,374
West Virginia	Kammer	3	8,347	211	194	0	7,436	8,347	211	194	7,485
West Virginia	Kanawha River	1	4,541	115	0	488	4,428	4,541	115	0	3,988
West Virginia	Kanawha River	2	4,043	102	0	753	4,262	4,043	102	0	3,531
West Virginia	Mitchell	1	21,108	534	491	0	18,807	21,108	533	491	18,926
West Virginia	Mitchell	2	21,842	553	508	0	19,460	21,842	551	508	19,587
West Virginia	Mountaineer (1301)	1	40,253	1,020	0	0	34,924	40,253	1,017	0	35,160
West Virginia	Mt Storm	1	20,987	531	489	0	18,700	20,987	530	489	18,820
West Virginia	Mt Storm	2	19,689	498	458	0	17,542	19,689	497	458	17,656
West Virginia	Mt Storm	3	20,365	516	474	0	18,145	20,365	514	474	18,262
West Virginia	Phil Sporn	11	2,776	70	0	700	3,110	2,776	70	0	2,425
West Virginia	Phil Sporn	21	2,336	59	0	920	2,947	2,336	59	0	2,040
West Virginia	Phil Sporn	31	3,345	85	0	386	3,286	3,345	84	0	2,922
West Virginia	Phil Sporn	41	2,626	66	0	755	3,034	2,626	66	0	2,294
West Virginia	Phil Sporn	51	11,999	304	0	117	10,529	11,999	303	0	10,461
West Virginia	Pleasants	1	20,115	509	0	0	17,454	20,115	508	0	17,570
West Virginia	Pleasants	2	23,076	584	0	0	20,022	23,076	583	0	20,156
West Virginia	Rivesville	7	794	20	0	542	1,231	794	20	0	694
West Virginia	Rivesville	8	2,379	60	0	446	2,511	2,379	60	0	2,078
West Virginia	Willow Island	1	1,097	28	0	536	1,488	1,097	28	0	958
West Virginia	Willow Island	2	4,595	116	0	663	4,651	4,595	116	0	4,014
Wisconsin	Alma	84	1,363	34	0	0	1,183	1,363	34	0	1,191
Wisconsin	Alma	85	2,176	55	0	0	1,890	2,176	55	0	1,902

TABLE 2. -- PHASE II ALLOWANCE ALLOCATIONS

State	Plant Name	Boiler [1]	Allowances for years 2000–2009					Allowances for years 2010 and thereafter			
			(A) [2] Unadjusted basic	(B) Special allowance reserve deduction	(C) Additional basic (§405(a)(3))	(D) Total Bonus	(E) [3] Total annual phase II	(F) [2] Unadjusted basic	(G) Special allowance reserve deduction	(H) Additional basic (§ 405(a)(3))	(I) [4] Total annual phase II
Wisconsin	Bay Front	1	583	14	0	537	1,043	583	14	0	509
Wisconsin	Bay Front	2	606	16	0	0	524	606	16	0	529
Wisconsin	Bay Front	3	0	0	0	0	0	0	0	0	0
Wisconsin	Bay Front	4	17	0	0	17	33	17	0	0	14
Wisconsin	Bay Front	5	155	4	0	144	279	155	4	0	135
Wisconsin	Blount Street	3	6	0	0	0	6	6	0	0	6
Wisconsin	Blount Street	5	7	0	0	0	7	7	0	0	6
Wisconsin	Blount Street	6	7	0	0	0	7	7	0	0	7
Wisconsin	Blount Street	7	132	4	0	0	115	132	4	0	114
Wisconsin	Blount Street	8	812	21	0	0	705	812	21	0	709
Wisconsin	Blount Street	9	1,042	26	0	0	905	1,042	26	0	910
Wisconsin	Blount Street	11	1	0	0	0	1	1	0	0	1
Wisconsin	Columbia	1	17,694	448	0	0	15,353	17,694	447	0	15,455
Wisconsin	Columbia	2	10,007	253	0	0	8,684	10,007	253	0	8,740
Wisconsin	Combustion Turbine	**2	0	0	0	0	0	0	0	0	0
Wisconsin	Commerce	25	2	0	0	2	4	4	0	0	4
Wisconsin	Edgewater	3	1,413	36	0	0	1,226	1,413	36	0	1,234
Wisconsin	Edgewater	4	11,660	301	0	0	10,306	11,660	300	0	10,377
Wisconsin	Edgewater	5	13,094	331	0	0	11,362	13,094	331	0	11,437
Wisconsin	Genoa	1	9,164	232	0	0	7,952	9,164	231	0	8,005
Wisconsin	J P Madgett	B1	8,235	208	0	229	7,375	8,235	208	0	7,193
Wisconsin	Manitowoc	6	766	18	0	0	666	766	18	0	669
Wisconsin	Manitowoc	7	929	24	0	0	805	929	23	0	812
Wisconsin	Manitowoc	8	27	0	0	0	24	27	0	0	24
Wisconsin	Manitowoc	9	0	0	0	0	0	0	0	0	0
Wisconsin	Na -- 7222	**1	0	0	0	0	0	0	0	0	0
Wisconsin	Na 1 -- 7203	**CT3	0	0	0	0	0	0	0	0	0
Wisconsin	Na 1 -- 7203	**CT4	0	0	0	0	0	0	0	0	0
Wisconsin	Na 1 -- 7205	**1	0	0	0	0	0	0	0	0	0
Wisconsin	Na 1 -- 7205	**2	0	0	0	0	0	0	0	0	0
Wisconsin	Na 1 -- 7205	**3	0	0	0	0	0	0	0	0	0
Wisconsin	Na3	**1	0	0	0	0	0	0	0	0	0
Wisconsin	Na4	**1	0	0	0	0	0	0	0	0	0
Wisconsin	Nelson Dewey	1	2,884	73	0	0	2,502	2,884	73	0	2,519
Wisconsin	Nelson Dewey	2	3,208	81	0	0	2,784	3,208	81	0	2,802
Wisconsin	North Oak Creek	1	2,420	61	0	0	2,101	2,420	61	0	2,114
Wisconsin	North Oak Creek	2	2,377	60	0	0	2,063	2,377	60	0	2,076
Wisconsin	North Oak Creek	3	2,434	62	0	0	2,112	2,434	61	0	2,126
Wisconsin	North Oak Creek	4	2,837	72	0	0	2,462	2,837	72	0	2,478
Wisconsin	Pleasant Prairie	1	13,466	341	0	0	11,703	13,466	340	0	11,760
Wisconsin	Pleasant Prairie	2	19,060	482	0	0	16,540	19,060	481	0	16,648
Wisconsin	Port Washington	1	604	15	0	0	524	604	15	0	528
Wisconsin	Port Washington	2	1,179	30	0	0	1,022	1,179	30	0	1,030
Wisconsin	Port Washington	3	981	25	0	0	851	981	25	0	857
Wisconsin	Port Washington	4	919	23	0	0	797	919	23	0	803
Wisconsin	Port Washington	5	1,213	31	0	0	1,052	1,213	31	0	1,059
Wisconsin	Pulliam	3	159	4	0	0	138	159	4	0	139

TABLE 2. -- PHASE II ALLOWANCE ALLOCATIONS

State	Plant Name	Boiler [1]	Allowances for years 2000–2009					Allowances for years 2010 and thereafter			
			(A) [2] Unadjusted basic	(B) Special allowance reserve deduction	(C) Additional basic (§405(a)(3))	(D) Total Bonus	(E) [3] Total annual phase II	(F) [2] Unadjusted basic	(G) Special allowance reserve deduction	(H) Additional basic (§ 405(a)(3))	(I) [4] Total annual phase II
Wisconsin	Pulliam	4	238	6	0	0	206	238	6	0	206
Wisconsin	Pulliam	5	694	18	0	0	601	694	18	0	606
Wisconsin	Pulliam	6	904	23	0	0	784	904	23	0	789
Wisconsin	Pulliam	7	2,326	59	0	0	2,018	2,326	59	0	2,031
Wisconsin	Pulliam	8	3,603	91	0	0	3,127	3,603	91	0	3,147
Wisconsin	Rock River	1	1,782	45	0	0	1,547	1,782	45	0	1,557
Wisconsin	Rock River	2	1,693	43	0	0	1,469	1,693	43	0	1,479
Wisconsin	South Oak Creek	5	4,440	112	0	0	3,854	4,440	112	0	3,878
Wisconsin	South Oak Creek	6	5,555	141	0	0	4,820	5,555	140	0	4,852
Wisconsin	South Oak Creek	7	7,433	188	0	0	6,449	7,433	188	0	6,492
Wisconsin	South Oak Creek	8	7,303	185	0	0	6,337	7,303	184	0	6,379
Wisconsin	Stoneman	B1	202	6	0	0	175	202	6	0	176
Wisconsin	Stoneman	B2	255	6	0	0	222	255	6	0	223
Wisconsin	Valley	1	1,790	45	0	236	1,792	1,790	45	0	1,564
Wisconsin	Valley	2	1,809	46	0	241	1,811	1,809	46	0	1,580
Wisconsin	Valley	3	1,656	42	0	503	1,942	1,656	42	0	1,448
Wisconsin	Valley	4	1,613	41	0	489	1,889	1,613	41	0	1,409
Wisconsin	West Marinette	**33	0	0	0	0	0	0	0	0	0
Wisconsin	Weston	1	871	22	0	0	756	871	22	0	761
Wisconsin	Weston	2	2,068	52	0	0	1,796	2,068	52	0	1,807
Wisconsin	Weston	3	11,089	281	0	0	9,622	11,089	280	0	9,686
Wyoming	Dave Johnston	BW41	5,155	130	0	195	4,666	5,155	130	0	4,503
Wyoming	Dave Johnston	BW42	5,015	127	0	183	4,535	5,015	127	0	4,380
Wyoming	Dave Johnston	BW43	9,711	246	0	332	8,759	9,711	245	0	8,482
Wyoming	Dave Johnston	BW44	7,278	184	0	435	6,750	7,278	184	0	6,357
Wyoming	Jim Bridger	BW71	22,967	581	0	814	20,742	22,967	580	0	20,081
Wyoming	Jim Bridger	BW72	22,486	569	0	791	20,303	22,486	568	0	19,640
Wyoming	Jim Bridger	BW73	21,533	545	0	746	19,431	21,533	544	0	18,808
Wyoming	Jim Bridger	BW74	3,797	96	0	741	4,036	3,797	96	0	3,316
Wyoming	Laramie River	1	4,823	122	0	891	5,076	4,823	122	0	4,212
Wyoming	Laramie River	2	4,095	104	0	719	4,272	4,095	103	0	3,577
Wyoming	Laramie River	3	3,660	93	0	620	3,795	3,660	92	0	3,197
Wyoming	Naughton	1	5,672	144	0	239	5,160	5,672	143	0	4,954
Wyoming	Naughton	2	7,301	185	0	352	6,667	7,301	184	0	6,377
Wyoming	Naughton	3	5,566	141	0	345	5,175	5,566	141	0	4,861
Wyoming	Wyodak	BW91	20,226	512	0	616	18,167	20,226	511	0	17,666

Notes:

[1] ** In the boiler identifier denotes a planned unit or a unit for which the boiler number is unavailable.

[2] The unadjusted allowances shown in columns (A) and (F) for the Twin Oak unit 2 in Texas and Clover units 1 and 2 in Virginia assume that these units fully qualify for §405(g)(4). If they do not, then Twin Oak 2 will receive 1,760 unadjusted basic allowances, Clover 1 will receive 2,796 unadjusted basic allowances, and Clover 2 will receive 2,796 unadjusted basic allowances pursuant to §405(g)(2).

[3] Column (E) is calculated as follows:
Column (E) = Adjusted Basic Allowances for 2000 (*not shown*) – Column (B) – Conservation/Renewable reserve deduction (*not shown*) – Repowering deduction (*not shown*) + Column (C) + Column (D). The adjusted basic allowances can be estimated as: Column (A) * 0.9011. The total deduction for both the

Conservation/Renewable reserve and for Repowering can be estimated as: Column (B) * 0.3185. The results may not agree exactly with those presented in this table due to rounding.

Note: 0.9011 = factor used to pro rate the allowances in Column (A) to produce the U.S. total of 8.9 million adjusted basic allowances.
(8,900,000 ÷ U.S. total unadjusted basic allowances for 2000–2009 = 0.9011).
0.3185 = factor used to subtract the allowances withheld for the conservation/renewable energy and repowering reserves not shown in this table (30,000 and 50,000 allowances annually, respectively).
((30,000 + 50,000) ÷ 250,000 = 0.3185)

[4] Column (I) is calculated as follows:

Column (I) = Adjusted basic allowances for 2010 (*not shown*) – Column (G) + Column (H). The adjusted basic allowances for 2010 can be estimated as: Column (F) * 0.8967. The results may not agree exactly with those presented in this table due to rounding.

Note: 0.8967 = factor used to pro rate the allowances in Column (F) to produce the U.S. total of 8.9 million adjusted basic allowances.
(8,900,000 ÷ U.S. total unadjusted basic allowances for 2010 and thereafter = 0.8967).

(c) *Allowance allocation for units under § 73.18.* Upon adequate submittal of information under § 73.18(b) and confirmation of unit eligibility under § 73.18(c), the Administrator will allocate allowances to the unit account:

(1) In the amount specified in Table 3 Column E to be held in the future year subaccounts representing calendar years 2000 through 2009; and

(2) In the amount specified in the Table 3 Column I to be held in the future year subaccounts representing calendar years 2010 and each year thereafter.

TABLE 3. — PHASE II ALLOWANCE ALLOCATIONS FOR §405(g)(4) ELIGIBLE UNITS

State	Plant Name	Boiler [1]	Allowances for years 2000 - 2009					Allowances for years 2010 and thereafter			
			(A) [2]	(B)	(C)	(D)	(E) [3]	(F) [2]	(G)	(H)	(I) [4]
			Unadjusted basic	Special allowance reserve deduction	Additional basic (§405(a)(3))	Total Bonus	Total annual phase II	Unadjusted basic	Special allowance reserve deduction	Additional basic (§ 405(a)(3))	Total annual phase II
Alabama	Mcwilliams	**4	973	25	0	0	844	973	25	0	848
Arizona	Springerville	3	2,234	57	0	0	1,938	2,234	56	0	1,952
California	Harbor Gen Station	**10	451	11	0	0	392	451	11	0	394
California	Harbor Gen Station	**10A	798	20	0	0	693	798	20	0	697
California	Harbor Gen Station	**10B	798	20	0	0	693	798	20	0	697
Florida	G W Ivey	**22	63	2	0	0	55	63	2	0	55
Florida	Indian River	**D	730	18	0	0	634	730	18	0	636
Florida	Intercession City	**7	805	20	0	0	699	805	20	0	703
Florida	Intercession City	**8	805	20	0	0	699	805	20	0	703
Florida	Intercession City	**9	805	20	0	0	699	805	20	0	703
Florida	Intercession City	**10	805	20	0	0	699	805	20	0	703
Florida	Lauderdale	**4GT1	1,083	27	0	0	941	1,083	27	0	946
Florida	Lauderdale	**4GT2	1,083	27	0	0	941	1,083	27	0	946
Florida	Lauderdale	**5GT1	1,083	27	0	0	941	1,083	27	0	946
Florida	Lauderdale	**5GT2	1,083	27	0	0	941	1,083	27	0	946
Florida	Martin	**3ST	960	24	0	0	833	960	24	0	839
Florida	Martin	**4ST	960	24	0	0	833	960	24	0	839
Florida	Martin	**3GT1	1,457	37	0	0	1,265	1,457	37	0	1,272
Florida	Martin	**3GT2	1,457	37	0	0	1,265	1,457	37	0	1,272
Florida	Martin	**4GT1	1,457	37	0	0	1,265	1,457	37	0	1,272
Florida	Martin	**4GT2	1,457	37	0	0	1,265	1,457	37	0	1,272
Illinois	Lakeside	GT1	350	9	0	0	303	350	9	0	306
Indiana	Na 1 — — 7228	**1	1,265	32	0	0	1,098	1,265	32	0	1,105
Indiana	Na 1 — — 7228	**2	1,265	32	0	0	1,098	1,265	32	0	1,105
Indiana	Na 1 — — 7228	**3	1,265	32	0	0	1,098	1,265	32	0	1,105
Iowa	Na 1 — — 7230	**1	487	12	0	0	424	487	12	0	426
Kansas	Wamego	**NA1	19	0	0	0	17	19	0	0	17
Maryland	Coal Gas Cc 1	**CT2	1,236	31	0	0	1,073	1,236	31	0	1,080
Maryland	Easton 2	**25	73	2	0	0	64	73	2	0	64
Maryland	Perryman	**51	1,304	33	0	0	1,131	1,304	33	0	1,139
Minnesota	Na 1 — — 7237	**1	973	25	0	0	844	973	25	0	849
Mississippi	Moselle	**4	779	20	0	0	676	779	20	0	680
Mississippi	Moselle	**5	237	6	0	0	206	237	6	0	207
Missouri	Combustion Turbine 1	**1	1,022	26	0	0	887	1,022	26	0	892
Missouri	Combustion Turbine 2	**2	1,022	26	0	0	887	1,022	26	0	892
Missouri	Empire Energy Center	**3	641	16	0	0	557	641	16	0	560
Missouri	Lake Road	**6	730	18	0	0	634	730	18	0	636
Nebraska	Na 1 — — 7019	**NA1	779	20	0	0	676	779	20	0	680
Nevada	Clark	**9	534	14	0	0	462	534	13	0	467
Nevada	Clark	**10	534	14	0	0	462	534	13	0	467
Nevada	Harry Allen	**GT1	681	17	0	0	592	681	17	0	595
Nevada	Harry Allen	**GT2	681	17	0	0	592	681	17	0	595
New Jersey	Butler	**1	341	9	0	0	295	341	9	0	297
New Jersey	Butler	**3	114	3	0	0	99	114	3	0	99
New Jersey	Na 1 — — 7139	**1	973	25	0	0	844	973	25	0	849
New Jersey	Na 2 — — 7140	**1	2,920	74	0	0	2,533	2,920	74	0	2,550
Ohio	Dover	**7	171	4	0	0	148	171	4	0	150
Ohio	Woodsdale	**GT6	337	9	0	0	292	337	9	0	294
Ohio	Woodsdale	**GT7	337	9	0	0	292	337	9	0	294
Pennsylvania	Trenton Cogen Proj	**1	1,386	35	0	0	1,203	1,386	35	0	1,211
South Carolina	Na 1 — — 7108	**GT1	905	23	0	0	785	905	23	0	790

TABLE 3. -- PHASE II ALLOWANCE ALLOCATIONS FOR §405(g)(4) ELIGIBLE UNITS

State	Plant Name	Boiler [1]	Allowances for years 2000–2009					Allowances for years 2010 and thereafter			
			(A) [2]	(B)	(C)	(D)	(E) [3]	(F) [2]	(G)	(H)	(I) [4]
			Unadjusted basic	Special allowance reserve deduction	Additional basic (§405(a)(3))	Total Bonus	Total annual phase II	Unadjusted basic	Special allowance reserve deduction	Additional basic (§ 405(a)(3))	Total annual phase II
South Carolina	Na 2 -- 7107	**GT2	905	23	0	0	785	905	23	0	790
South Carolina	Na 3 -- 7108	**GT3	905	23	0	0	785	905	23	0	790
South Dakota	Ct	**5	389	10	0	0	338	389	10	0	340
Texas	R W Miller	**4	973	25	0	0	844	973	25	0	849
Texas	R W Miller	**5	973	25	0	0	844	973	25	0	849
Texas	Twin Oak	2	6,457	163	0	0	5,603	6,457	163	0	5,640
Utah	Bonanza	**2	3,416	86	0	0	2,965	3,416	86	0	2,984
Virginia	Clover	1	3,357	85	0	0	2,913	3,357	85	0	2,932
Virginia	Clover	2	3,357	85	0	0	2,913	3,357	85	0	2,932
Virginia	East Chandler	**2	19	0	0	0	17	19	0	0	17
Wisconsin	Combustion Turbine	**1	701	18	0	0	608	701	18	0	612
Wisconsin	Concord	**1	144	4	0	0	125	144	4	0	125
Wisconsin	Concord	**2	144	4	0	0	125	144	4	0	125
Wisconsin	Concord	**3	144	4	0	0	125	144	4	0	125
Wisconsin	Concord	**4	144	4	0	0	125	144	4	0	125
Wisconsin	Na 1 -- 7203	**CT1	730	18	0	0	634	730	18	0	638
Wisconsin	Na 1 -- 7203	**CT2	44	1	0	0	39	44	1	0	39
Wisconsin	Na2	**1	874	22	0	0	759	874	22	0	763
Wisconsin	Paris	**1	142	4	0	0	123	142	4	0	124
Wisconsin	Paris	**2	142	4	0	0	123	142	4	0	124
Wisconsin	Paris	**3	142	4	0	0	123	142	4	0	124
Wisconsin	Paris	**4	142	4	0	0	123	142	4	0	124

Notes:

[1] ** in the boiler identifier denotes a planned unit or a unit for which the boiler number is unavailable.

[2] The unadjusted allowances shown in columns (A) and (F) for the Twin Oak unit 2 in Texas and Clover units 1 and 2 in Virginia assume that these units fully qualify for §405(g)(4). If they do not, then Twin Oak 2 will receive 1,760 unadjusted basic allowances, Clover 1 will receive 2,798 unadjusted basic allowances, and Clover 2 will receive 2,798 unadjusted basic allowances pursuant to §405(g)(2).

[3] Column (E) is calculated as follows:

Column (E) = Adjusted Basic Allowances for 2000 (*not shown*) – Column (B) – Conservation/Renewable reserve deduction (*not shown*) – Repowering deduction (*not shown*) + Column (C) + Column (D). The adjusted basic allowances can be estimated as: Column (A) * 0.9011. The total deduction for both the Conservation/Renewable reserve and for Repowering can be estimated as: Column (B) * 0.3185. The results may not agree exactly with those presented in the table due to rounding.

Note: 0.9011 = factor used to pro rate the allowances in Column (A) to produce the U.S. total of 8.9 million adjusted basic allowances.
(8,900,000 ÷ U.S. total unadjusted basic allowances for 2000–2009 = 0.9011).
0.3185 = factor used to subtract the allowances withheld for the conservation/renewable energy and repowering reserves not shown in this table (30,000 and 50,000 allowances annually, respectively).
((30,000 + 50,000) ÷ 250,000 = 0.3185)

[4] Column (I) is calculated as follows:

Column (I) = Adjusted basic allowances for 2010 (*not shown*) – Column (G) + Column (H). The adjusted basic allowances for 2010 can be estimated as Column (F) * 0.8987. The results may not agree exactly with those presented in this table due to rounding.

Note: 0.8987 = factor used to pro rate the allowances in Column (F) to produce the U.S. total of 8.9 million adjusted basic allowances.
(8,900,000 ÷ U.S. total unadjusted basic allowances for 2010 and thereafter = 0.8987).

(d) *Allowance allocation for units under § 73.19.* (1) Upon submittal of adequate information under § 73.19(b) and confirmation of unit eligibility under § 73.19, the Administrator will allocate allowances to the unit account:

(i) In the amount specified in Table 2 Column E to be held in the future year subaccounts representing calendar years 2000 through 2009; and

(ii) In the amount specified in the Table 2 Column I to be held in the future year subaccounts representing calendar years 2010 and each year thereafter.

(2) Units listed in Table 4 which do not submit adequate information under § 73.19(b) or which are not eligible under § 73.19 will be allocated allowances as calculated under § 73.11.

TABLE 4. -- PHASE II ALLOWANCE ALLOCATIONS FOR §405(i)(2) ELIGIBLE UNITS [1]

State	Plant Name	Boiler	Allowances for years 2000–2009			Allowances for years 2010 and thereafter		
			(A) [2]	(B)	(C) [3]	(D) [4]	(E)	(F) [5]
			Unadjusted basic	Increment for §405(i)(2)	Unadjusted basic, less §405(i)(2) increment	Unadjusted basic	Increment for §405(i)(2)	Unadjusted basic, less §405(i)(2) increment
Florida	Anclote	1	11,740	1,403	10,337	11,737	1,403	10,334
Florida	Anclote	2	12,421	1,529	10,892	12,418	1,529	10,889
Michigan	Monroe	1	27,243	198	27,045	27,243	198	27,045
Michigan	Monroe	2	28,273	495	27,778	28,273	495	27,778
Michigan	Monroe	3	26,466	445	26,021	26,466	445	26,021
Michigan	Monroe	4	29,065	930	28,135	29,065	930	28,135

Notes

[1] The unadjusted allowances shown in columns (A) and (D) for the units in this table and in columns (A) and (F) of Table 2 assume that these units fully qualify for §405(i)(2). If they do not, then they will receive the unadjusted basic allowances shown in columns (C) and (F) of this table. Please note that the unadjusted basic allowances shown will be adjusted to reach the 8.9 million ton overall cap on allowances, and furthermore that deductions for the Conservation and Renewable Energy Reserve, the Repowering Reserve, and the Special Allowance Reserve will also be deducted from the allowances shown herein.

[2] Equal to the Unadjusted basic allowances shown in column (A) of Table 2.

[3] Equal to column (A) minus column (B).

[4] Equal to the Unadjusted basic allowances shown in column (F) of Table 2.

[5] Equal to column (D) minus column (E).

[58 FR 3687, Jan. 11, 1993, as amended at 58 FR 15650, Mar. 23, 1993; 58 FR 33770, June 21, 1993; 58 FR 40747, July 30, 1993]

§ 73.11 Revision of allocations.

No later than June 1, 1998, the Administrator will allocate allowances to the unit accounts for each unit listed in Table 2 or 3 of § 73.10, instead of the number of allowances specified in Tables 2, 3, and 4, as follows:

(a) The Administrator will allocate allowances to be held in the future year subaccounts representing calendar years 2000 through 2009 as follows:

(1) Units eligible for allowances under § 73.19(a) and that documentation according to § 73.19(b) will have unadjusted basic allowances as listed in Table 2 Column A.

(2) The Administrator will calculate unadjusted basic allowances (Year 2000) for existing units with approved repowering extension plans under § 72.44 of this chapter according to the following equation, instead of unadjusted basic allowances listed in Table 2 Column A:

$$\text{Unit's Unadjusted Basic Allowances (Year 2000)} = \text{Baseline} \times 1.2 / 2000$$

(3) Adjustment of basic allowances. The Administrator will adjust each unit's unadjusted basic allowances as listed in Table 2 Column A, Table 3 Column A and Table 4 Column C, and as stated in paragraphs (a) (1) and (2) of this section, as follows:

$$\text{Unit's Adjusted Basic Allowances (Year 2000)} = \text{Unit's Unadjusted Basic Allowances (Year 2000)} \times \frac{8{,}900{,}000}{\text{Sum of All Unit's Unadjusted Basic Allowances (Year 2000)}}$$

(4) Repowering adjustment. The Administrator will calculate a repowering deduction according to the following equation:

$$\text{Repowering Deduction} = \text{Annual Set Aside} \times \frac{\text{Unit's Adjusted Basic Allowances (Year 2000)}}{8{,}900{,}000}$$

where:

Set Aside=Sum of all repowering allowances for the year 2000 under 40 CFR 73.21

Annual Set Aside=Set Aside/10

(5) Special allowance reserve deduction. The Administrator will calculate a Special Allowance Deduction according to the following equation:

$$\text{Special Allowance Deduction} = 250{,}000 \times \frac{\text{Unit's Adjusted Basic Allowances (Year 2000)}}{8{,}900{,}000}$$

(6) Conservation and renewable energy reserve. The Administrator will calculate the Conservation Deduction according to the following equation:

$$\text{Conservation Deduction} = 30{,}000 \times \frac{\text{Unit's Adjusted Basic Allowances (Year 2000)}}{8{,}900{,}000}$$

(7) Final allowance allocations. (i) (A) According to paragraphs (a) (1) through (6) of this section, the Administrator will revise the allowances allocated to each unit listed in Table 2 of § 73.10 and will allocate to each unit's subaccount representing calendar years 2000 through 2009 Final Revised Phase II Allowances according to the following equation:

$$\text{Unit's Final Revised Phase II Allowances (Year 2000)} = \text{Unit's Adjusted Basic Allowances (Year 2000)} + \text{Number for Unit in Table 2 Column C} - \text{Repowering Deduction} - \text{Conservation Deduction} - \text{Special Allowance Deduction} + \text{Number for Unit in Table 2 Column D}$$

(B) According to paragraphs (a) (1) through (6) of this section, the Administrator will revise the allowances allocated to each unit listed in Table 3 of § 73.10 and will allocate to each unit's subaccount representing calendar years 2000 through 2009 Final Revised Phase II Allowances according to the following equation:

$$\text{Unit's Final Revised Phase II Allowances (Year 2000)} = \text{Unit's Adjusted Basic Allowances (Year 2000)} + \text{Number for Unit in Table 3 Column C} - \text{Repowering Deduction} - \text{Conservation Deduction} - \text{Special Allowance Deduction} + \text{Number for Unit in Table 3 Column D}$$

(C) According to paragraphs (a) (1) through (6) of this section, the Administrator will revise the allowances allocated to each unit listed in Table 4 of § 73.10 (and not eligible for allocations under Table 2) and will allocate to each unit's subaccount representing calendar years 2000 through 2009 Final Revised Phase II Allowances according to the following equation:

$$\text{Unit's Final Revised Phase II Allowances (Year 2000)} = \text{Unit's Adjusted Basic Allowances (Year 2000)} + \text{Number for Unit in Table 4 Column C} - \text{Repowering Deduction} - \text{Conservation Deduction} - \text{Special Allowance Deduction} + \text{Number for Unit in Table 4 Column D}$$

(ii) (A) If, as of January 1, 1998, both the auction and sales under subpart E of this part are terminated as provided for in subpart E, instead of allowances under paragraph (a)(7)(i) of this section, the Administrator will revise the allowances allocated to each unit listed in Table 2 of § 73.10 and will allocate to each unit's subaccount representing calendar years 2000 through 2009 Final Revised Phase II Allowances according to the following equation:

$$\text{Unit's Final Revised Phase II Allowances (Year 2000)} = \text{Unit's Adjusted Basic Allowances (Year 2000)} + \text{Number for Unit in Table 2 Column C} - \text{Repowering Deduction} - \text{Conservation Deduction} + \text{Number for Unit in Table 2 Column D}$$

(B) If, as of January 1, 1998, both the auction and sales under subpart E of this part are terminated as provided for in subpart E, instead of allowances under paragraph (a)(7)(i) of this section, the Administrator will revise the allowances allocated to each unit listed in Table 3 of § 73.10 and will allocate to each unit's subaccount representing calendar years 2000 through 2009 Final Revised Phase II Allowances according to the following equation:

$$\text{Unit's Final Revised Phase II Allowances (Year 2000)} = \text{Unit's Adjusted Basic Allowances (Year 2000)} + \text{Number for Unit in Table 3 Column C} - \text{Repowering Deduction} - \text{Conservation Deduction} + \text{Number for Unit in Table 3 Column D}$$

(b) The Administrator will allocate allowances to be held in the future year subaccounts representing calendar years 2010 and each year thereafter as follows:

(1) Units eligible for allowances under § 73.19(a) and that documentation according to § 73.19(b) will have unadjusted basic allowances as listed in Table 2 Column A.

(2) The Administrator will calculate unadjusted basic allowances (Year 2010) for units with approved repowering extension plans under § 72.44 of this chapter according to the following equation, instead of unadjusted basic allowances listed in Table 2 Column F:

$$\text{Unit's Unadjusted Basic Allowances (Year 2010)} = \text{Baseline} \times 1.2 / 2000$$

(3) *Adjustment of basic allowances.* The Administrator will adjust each unit's unadjusted basic allowances as listed in Table 2 Column F, Table 3 Column F, and Table 4 Column F, and as stated in paragraphs (a) and (b) of this section, as follows:

$$\text{Unit's Adjusted Basic Allowances (Year 2010)} = \text{Unit's Unadjusted Basic Allowances (Year 2010)} \times \frac{8{,}900{,}000}{\text{Sum of All Unit's Unadjusted Basic Allowances (Year 2010)}}$$

(4) *Repowering adjustment.* The Administrator will calculate a repowering deduction according to the following equation:

$$\text{Repowering Deduction} = \text{Annual Set Aside} \times \frac{\text{Unit's Adjusted Basic Allowances (Year 2010)}}{8{,}900{,}000}$$

where:

Set Aside=Sum of all repowering allowances for the year 2000 under 40 CFR § 73.21

Annual Set Aside=Set Aside/10

(5) *Special allowance reserve deduction.* The Administrator will calculate a Special Allowance Deduction according to the following equation:

$$\text{Special Allowance Deduction} = 250{,}000 \times \frac{\text{Unit's Adjusted Basic Allowances (Year 2010)}}{8{,}900{,}000}$$

(6) *Conservation and renewable energy reserve.* The Administrator will calculate the Conservation Deduction according to the following equation:

$$\text{Conservation Deduction} = 30{,}000 \times \frac{\text{Unit's Adjusted Basic Allowances (Year 2010)}}{8{,}900{,}000}$$

(7) *Final allowance allocations.* (i) (A) According to paragraphs (b) (1) through (6) of this section, the Administrator will revise the allowances allocated to each unit listed in Table 2 of § 73.10 and will allocate to each unit's subaccount representing calendar years 2010 and each year thereafter according to the following equation:

$$\text{Unit's Final Revised Phase II Allowances (Year 2010)} = \text{Unit's Adjusted Basic Allowances (Year 2010)} + \text{Number for Unit in Table 2 Column C} - \text{Special Allowance Deduction}$$

(B) According to paragraphs (b) (1) through (6) of this section, the Administrator will revise the allowances allocated to each unit listed in Table 3 of § 73.10 and will allocate to each unit's subaccount representing calendar years 2010 and each year thereafter according to the following equation:

$$\text{Unit's Final Revised Phase II Allowances (Year 2010)} = \text{Unit's Adjusted BasicAllowances (Year 2010)} + \text{Number for Unit in Table 3 Column C} - \text{Special Allowance Deduction}$$

(ii)(A) If, as of January 1, 1998, both the auction and sales under subpart E of this part are terminated as provided for in subpart E, instead of allowances under paragraph (b)(7)(i) of this section, the Administrator will revise the allowances allocated to each unit listed in Table 2 of § 73.10 and will allocate to unit's subaccount representing calendar years 2010 and each year thereafter according to the following equation:

$$\text{Unit's Final Revised Phase II Allowances (Year 2010)} = \text{Unit's Adjusted Basic Allowances (Year 2010)} + \text{Number for Unit in Table 2 Column C}$$

(B) If, as of January 1, 1998, both the auction and sales under subpart E of this part are terminated as provided for in subpart E, instead of allowances under paragraph (b)(7)(i) of this section, the Administrator will revise the allowances allocated to each unit listed in Table 3 of § 73.10 and will allocate to each unit's subaccount representing calendar years 2010 and each year thereafter according to the following equation:

$$\text{Unit's Final Revised Phase II Allowances (Year 2010)} = \text{Unit's Adjusted Basic Allowances (Year 2010)} + \text{Number for Unit in Table 3 Column C}$$

(C) If, as of January 1, 1998, both the auction and sales under subpart E of this part are terminated as provided for in subpart E, instead of allowances under paragraph (a)(7)(i) of this section, the Administrator will revise the allowances allocated to each unit listed in Table 4 of § 73.10 (and not eligible for allocations under Table 2) and will allocate to each unit's subaccount representing calendar years 2010 and thereafter according to the following equation:

$$\text{Unit's Final Revised Phase II Allowances (Year 2010)} = \text{Unit's Adjusted Basic Allowances (Year 2010)} + \text{Number for Unit in Table 4 Column C}$$

[58 FR 15705, Mar. 23, 1993]

§ 73.12 Rounding procedures.

(a) *Calculation rounding.* All allowances under this part and part 72 of this chapter shall be allocated as whole allowances. All calculations for such allowances shall be rounded down for decimals less than 0.500 and up for decimals of 0.500 or greater.

(b) *Achieving exact allowance reserves and allowance totals.* (1) If the sum of adjusted basic allowances exceeds 8,900,000; the sum of the deductions for the repowering annual set aside is less than the annual set aside; the sum of the deductions for the Energy Conservation and Renewable Energy Reserve is less than 30,000 allowances per year; or the sum of the deductions for the special allowance reserve is less than 250,000, then the Administrator will withdraw one allowance from each unit, beginning with the unit receiving the largest number of allowances, in descending order, until the allocated allowances balance with the number of allowances available.

(2) If the sum of adjusted basic allowances is less than 8,900,000; the sum of the deductions for the repowering annual set aside exceeds the annual set aside; the sum of the deductions for the Energy Conservation and Renewable Energy Reserve exceeds 30,000 allowances per year; or the sum of the deductions for the special allowance reserve exceeds 250,000, then the Administrator will distribute one allowance for each unit, beginning with the unit receiving the largest number of allowances, in descending order, until the allocated allowances balance with the number of allowances required.

[58 FR 15707, Mar. 23, 1993]

§73.13 Procedures for submittals.

(a) *Address for submittal.* All submittals under this subpart shall be made by the designated representative to the Director, Acid Rain Division, (6204J), 401 M Street, SW., Washington, DC 20460 and shall meet the requirements specified in 40 CFR 72.21.

(b) *Appeals procedures.* The designated representative may appeal the decision as to eligibility or allocation of allowances under §§73.16, 73.18, 73.19, and 73.20, using the appeals procedures of part 78 of this chapter.

[58 FR 15708, Mar. 23, 1993]

§§73.14—73.15 [Reserved]

§73.16 Phase I early reduction credits.

(a) *Unit eligibility.* Units listed in Table 1 of §73.10 are eligible to receive allowance allocations under this section if:

(1) The unit is authorized by the Governor of the State in which the unit is located to make reductions in emissions of sulfur dioxide prior to calendar year 1995; and

(2) The unit is part of a utility system (which, for the purposes of this section only, includes all electrical generators operated by a utility, including those that are not fossil fuel-fired) that has decreased its total coal-fired generation, as a percentage of total system generation, by more than twenty percent between January 1, 1980, and December 31, 1985; and

(3) The unit is part of a utility system that during calendar years 1985 through 1987 had a weighted capacity factor for all coal-fired units in the system of less than fifty percent. The weighted capacity factor is equal to:

$$\text{Weighted Capacity Factor} = \frac{\text{Sum of actual generation of all coal - fired units in the utility system}}{\text{Sum of all coal generators' nameplate capacity} \times 8760}$$

(b) *Emissions reductions eligibility.* Sulfur dioxide emissions reductions eligible for allowance allocations shall:

(1) Be made no earlier than calendar year 1991 and no later than calendar year 1994; and

(2) Be due to physical changes to the plant or be a result of a change in the method of operating the plant including but not limited to changing the type or quality of fuel being burned.

(c) *Initial certification of eligibility.* The designated representative for a unit listed in Table 1 of §73.10 that seeks allowances under this section shall apply for certification of unit eligibility prior to or accompanying a request for allowances under paragraph (d) of this section. A completed application for this certification shall be submitted according to the requirements of §73.13 of this part and shall include the following:

(1) A letter from the Governor of the State in which the unit is located authorizing the unit to make reductions in emissions of sulfur dioxide prior to calendar year 1995;

(2) A report listing all units in the utility system, each fossil fuel-fired unit's fuel consumption and fuel heat content for calendar year 1980, and each generator's total electrical generation for calendar years 1980 and 1985 (including all generators whether fossil fuel-fired, nuclear, hydroelectric, or other.)

(d) *Request for allowances.* (1) The designated representative for the requesting unit shall submit the request for allowances according to the procedures in § 73.13 and shall include the following information:

(i) The calendar year for which credits for reductions are requested and the actual SO_2 emissions and fuel consumption in that year. For units that have not installed and received certification of their SO_2 continuous emission monitoring system prior to the calendar year(s) for which credits for reductions are requested, the designated representative shall submit photocopies of the units' Form EIA–767 for the calendar year of the requested reductions in emissions; and

(ii) A letter signed by the designated representative: (A) Stating and documenting the specific physical changes to the plant or changes in the method of operating the plant (including but not limited to changing the type or quality of fuel being burned) which resulted in the reduction of emissions; and

(B) Certifying that all photocopies are exact duplicates.

(2) The designated representative shall submit any request for allowances for years prior to 1993 no later than May 1, 1993. The designated representative shall submit any request for allowances for 1993 no later than May 1, 1994. For 1994 and after, the designated representative shall submit any request for allowances no later than March 1 of the calendar year following the year in which the reductions were made.

(e) *Allowance allocation.* The Administrator will allocate allowances to the eligible unit upon satisfactory submittal of information under paragraphs (c) and (d) of this section in the amount calculated by the following equations. Such allowances will be allocated to the eligible unit's 1995 future year subaccount. The following provisions shall apply to the allocation:

(1) ''Prior year'' means a single calendar year selected by the eligible unit from 1991 to 1994 inclusive.

(2) One ''credit'' equals one ton of eligible SO_2 emissions reductions.

(3) ''ERC units'' are units eligible for early reduction credits, and ''non-ERC units'' are fossil fuel-fired units that are part of the same utility system but are not eligible for early reduction credits.

(4) Calendar year 1990 data will be used as the basis against which early reduction credits are determined.

(5) Early reduction credits will be calculated at the unit level, subject to the restrictions in paragraph (e)(6) of this section.

(6) The number of credits for eligible Phase I units will be calculated as follows:

(i) *Comparison of the prior year utilization of ERC units to the 1990 utilization, as a percentage of system utilization.* If, as calculated below, system-wide prior year utilization of ERC units exceeds systems-wide 1990 utilization of ERC units on a percentage basis, then paragraphs (e)(6)(ii) and (iii) of this section apply. If not, the ERC units are eligible to receive early reduction credits as calculated in paragraph (e)(6)(v)(A) of this section.

$$\text{Prior year utilization} = \frac{\sum_{\text{ERC units}} \text{Heat input}_{\text{prior year}} \quad (\text{in mmBtu})}{\sum_{\text{all system units}} \text{Heat input}_{\text{prior year}} \quad (\text{in mmBtu})}$$

$$\textbf{1990}\ utilization = \frac{\sum_{ERC\ units} Heat\ input_{1990}\ (in\ mmBtu)}{\sum_{all\ system\ units} Heat\ input_{1990}\ (in\ mmBtu)}$$

(ii) *Comparison of the prior year average emission rate of all ERC units to the prior year average emission rate of all non-ERC units.* If, as calculated below, the system-wide average SO_2 emission rate of ERC units exceeds that of non-ERC units, then a unit's prior year utilization will be restricted in accordance with paragraph (e)(6)(iv) of this section. If not, then paragraph (e)(6)(iii) of this section applies.

$$ERC\ unit\ prior\ year\ emissions\ rate = \frac{\sum_{ERC\ units} SO_2\ emissions_{prior\ year}\ (in\ pounds)}{\sum_{ERC\ units} Heat\ input_{prior\ year}\ (in\ mmBtu)}$$

$$Non\text{-}ERC\ unit\ prior\ year\ emissions\ rate = \frac{\sum_{non\text{-}ERC\ units} SO_2\ emissions_{prior\ year}\ (in\ pounds)}{\sum_{non\text{-}ERC\ units} Heat\ input_{prior\ year}\ (in\ mmBtu)}$$

(iii) *Comparison of the emission rate of the non-ERC units in the prior year to the emission rate of the non-ERC units in 1990.* If, as calculated in paragraph (ii) of this section, the prior year system average non-ERC SO_2 emission rate increases above the 1990 system average non-ERC SO_2 emission rate, as calculated below, then a unit's prior year utilization will be restricted in accordance with paragraph (e)(6)(iv) of this section. If not, the ERC units are eligible to receive early reduction credits as calculated in paragraph (e)(6)(v)(A) of this section.

$$Non\text{-}ERC\ unit\ 1990\ emission\ rate = \frac{\sum_{non\text{-}ERC\ units} SO_2\ emissions_{1990}\ (in\ pounds)}{\sum_{non\text{-}ERC\ units} Heat\ input_{1990}\ (in\ mmBtu)}$$

(iv) *Calculation of the utilization limit for restricted units.* The limit on utilization for each unit eligible for early reduction credits subject to paragraphs (e)(6) (ii) and (iii) of this section will be calculated as follows:

$$\text{ERC unit's Heat input}_{\text{prior year}}\ (\text{in mmBtu}) \times \frac{\left(\dfrac{\sum_{\text{ERC units}} \text{Heat input}_{1990}\ (\text{in mmBtu})}{\sum_{\text{all units}} \text{Heat input}_{1990}\ (\text{in mmBtu})}\right)}{\left(\dfrac{\sum_{\text{ERC units}} \text{Heat input}_{\text{prior year}}\ (\text{in mmBtu})}{\sum_{\text{all units}} \text{Heat input}_{\text{prior year}}\ (\text{in mmBtu})}\right)}$$

This result, expressed in million Btus, is the restricted utilization of the ERC unit to be used in the calculation of early reduction credits in paragraph (e)(6)(v)(B) of this section.

(v)(A) *Calculation of the unit's early reduction credits where the unit's prior year utilization is not restricted.*

$$\frac{\left(\begin{array}{c}\text{ERC unit's}\\ SO_2\text{ emission rate}_{1990}\\ (\text{in lb/mmBtu})\end{array} - \begin{array}{c}\text{ERC unit's}\\ SO_2\text{ emission rate}_{\text{prior year}}\\ (\text{in lb/mmBtu})\end{array}\right) \times \begin{array}{c}\text{heat input}_{\text{prior year}}\\ (\text{in mmBtu})\end{array}}{2000}$$

(B) *Calculation of the unit's early reduction credits where the unit's prior year* utilization is restricted.

$$\frac{\left(\begin{array}{c}\text{ERC unit's}\\ SO_2\text{ emission rate}_{1990}\\ (\text{in lb/mmBtu})\end{array} - \begin{array}{c}\text{ERC unit's}\\ SO_2\text{ emission rate}_{\text{prior year}}\\ (\text{in lb/mmBtu})\end{array}\right) \times \begin{array}{c}\text{restricted heat input from (iv)}\\ (\text{in mmBtu})\end{array}}{2000}$$

(vi) The Administrator will allocate to the ERC unit allowances equal to the lesser of the calculated number of credits in paragraphs (e)(6)(v)(A) or (v)(B) of this section and the following limitation:

$$\frac{\left(\begin{array}{c}\text{ERC unit's actual}\\ SO_2\text{ emission rate}_{1985}\\ \text{(in lb/mmBtu)}\end{array} \times \text{baseline (in mmBtu)}\right)}{2000} - \begin{array}{c}\text{Allowances}\\ \text{from Table A of the Act}\\ \text{(in tons)}\end{array}$$

[58 FR 15708, Mar. 23, 1993]

§73.17 [Reserved]

§73.18 Submittal procedures for units commencing commercial operation during the period from January 1, 1993 through December 31, 1995.

(a) *Eligibility*. To be eligible for allowances under this section, a unit shall commence commercial operation between January 1, 1993, and December 31, 1995, and have commenced construction before December 31, 1990.

(b) *Application for allowances*. No later than December 31, 1995, the designated representative for a unit expected to be eligible under this provision must submit a photocopy of a signed contract for the construction of the unit.

(c) *Commencement of commercial operation*. The Administrator will use EIA information submitted by the utility for the boiler on-line date as commencement of commercial operation.

[58 FR 15710, Mar. 23, 1993]

§73.19 Certain units with declining SO_2 rates.

(a) *Eligibility*. A unit is eligible for allowance allocations under this section if it meets the following requirements:

(1) It is an existing unit that is a utility unit;

(2) It serves a generator with nameplate capacity equal to or greater than 75 MWe;

(3) Its 1985 actual SO_2 emissions rate was equal to or greater than 1.2 lb/mmBtu;

(4) Its 1990 actual SO_2 emissions rate is at least 50 percent less than the lesser of its 1980 actual or allowable SO_2 emissions rate;

(5) Its 1997 actual SO_2 emission rate is less than 1.2 lb/mmBtu;

(6) It commenced commercial operation after January 1, 1970;

(7) It is part of a utility system whose combined commercial and industrial kilowatt-hour sales increased more than 20 percent between calendar years 1980 and 1990; and

(8) It is part of a utility system whose company-wide fossil-fuel SO_2 emissions rate declined 40 percent or more from 1980 to 1988.

(b) *Submittal procedures*. Not later than March 1, 1998, in order to be eligible for allowance allocations under this section, the designated representative for the unit must submit a photocopy of the unit's 1997 Form EIA–767 and a letter certifying that the photocopy is a true copy.

[58 FR 15710, Mar. 23, 1993]

§73.20 Phase II early reduction credits.

(a) *Unit eligibility*. Units listed in Table 2 or 3 of §73.10 are eligible for allowances under this section if:

(1) The unit is not a unit subject to emissions limitation requirements of Phase I and is not a substitution unit (under 40 CFR 72.41) or a compensating unit (under 40 CFR 72.43);

(2) The unit is authorized by the Governor of the State in which the unit is located;

(3) The unit is part of a utility system (which, for the purposes of this section only, includes all generators operated by a single utility, including generators that are not fossil fuel-fired) that has decreased its total coal-fired generation, as a percentage of total system generation, by more than twenty percent between January 1, 1980, and December 31, 1985; and

(4) The unit is part of a utility system that during calendar years 1985 through 1987 had a weighted capacity factor for all coal-fired units in the system of less than fifty percent. The weighted capacity factor is equal to:

$$\text{Weighted Capacity Factor} = \frac{\text{Sum of actual generation of all coal-fired units in the utility system}}{\text{Sum of all coal generators' nameplate capacity} \times 8760}$$

(b) *Emissions reductions eligibility*. Sulfur dioxide emissions reductions eligible for allowance credits at units eligible under paragraph (a) of this section must meet the following requirements:

(1) Be made no earlier than calendar year 1995 and no later than calendar year 1999; and

(2) Be due to physical changes to the plant or are a result of a change in the method of operating the plant including but not limited to changing the type or quality of fuel being burned.

(c) *Initial certification of eligibility*. The designated representative of a unit that seeks allowances under this section shall apply for certification of unit eligibility prior to or accompanying a request for allowances under paragraph (d) of this section. A completed application for this certification shall be submitted according to § 73.13 and shall include the following:

(1) A letter from the Governor of the State in which the unit is located authorizing the unit to make reductions in sulfur dioxide emissions; and

(2) A report listing all units in the utility system, each fossil fuel-fired unit's fuel consumption and fuel heat content for calendar year 1980, and each generator's total electrical generation for calendar years 1980 and 1985 (including all generators, whether fossil fuel-fired, nuclear, hydroelectric or other).

(d) *Request for allowances.* (1) The designated representative of the requesting unit shall submit the request for allowances according to the procedures of § 73.13 and shall include the following information:

(i) The calendar year for which credits for reductions are requested and the actual SO_2 emissions and fuel consumption in that year;

(ii) A letter signed by the designated representative stating and documenting the specific physical changes to the plant or changes in the method of operating the plant (including but not limited to changing the type or quality of fuel being burned) which resulted in the reduction of emissions; and

(iii) A letter signed by the designated representative certifying that all photocopies are exact copies.

(2) The designated representative shall submit each request for allowances no later than March 1 of the calendar year following the year in which the reductions were made.

(e) *Allowance allocation*. The Administrator will allocate allowances to the eligible unit upon satisfactory submittal of information under paragraphs (c) and (d) of this section in the amount calculated by the following equations. Such allowances will be allocated to the unit's 2000 future year subaccount.

(1) ''Prior year'' means a single calendar year selected by the eligible unit from 1995 to 1999 inclusive.

(2) One ''credit'' equals one ton of eligible SO_2 emissions reductions.

(3) ''ERC units'' are units eligible for early reduction credits, and ''non-ERC units'' are fossil fuel-fired units that are part of the same operating system but are not eligible for early reduction credits.

(4) Calendar year 1990 data will be used as the basis against which early reduction credits are determined.

(5) Early reduction credits will be calculated at the unit level, subject to the restrictions in paragraph (e)(6) of this section.

(6) The number of credits for eligible Phase II units will be calculated as follows:

(i) *Comparison of the prior year utilization of ERC units to the 1990 utilization, as a percentage of system utilization*. If, as calculated below, system-wide prior year utilization of ERC units exceeds systems-wide 1990 utilization of ERC units on a percentage basis, then paragraphs (e)(6)(ii) and (iii) of this section apply. If not, the ERC units are eligible to receive early reduction credits as calculated in paragraph (e)(6)(v)(A) of this section.

$$\text{Prior year utilization} = \frac{\sum_{\text{ERC units}} \text{Heat input}_{\text{prior year}} \ (\text{in mmBtu})}{\sum_{\text{all system units}} \text{Heat input}_{\text{prior year}} \ (\text{in mmBtu})}$$

$$\text{1990 utilization} = \frac{\sum_{\text{ERC units}} \text{Heat input}_{1990} \ (\text{in mmBtu})}{\sum_{\text{all system units}} \text{Heat input}_{1990} \ (\text{in mmBtu})}$$

(ii) *Comparison of the prior year average emission rate of all ERC units to the prior year average emission rate of all non-ERC units.* If, as calculated below, the system-wide average SO_2 emission rate of ERC units exceeds that of non-ERC units, then a unit's prior year utilization will be restricted in accordance with paragraph (e)(6)(iv) of this section. If not, then paragraph (iii) of this section applies.

$$\text{ERC unit prior year emissions rate} = \frac{\sum_{\text{ERC units}} SO_2 \text{ emissions}_{\text{prior year}} \ (\text{in pounds})}{\sum_{\text{ERC units}} \text{Heat input}_{\text{prior year}} \ (\text{in mmBtu})}$$

$$\text{Non-ERC unit prior year emissions rate} = \frac{\sum_{\text{non-ERC units}} SO_2 \text{ emissions}_{\text{prior year}} \ (\text{in pounds})}{\sum_{\text{non-ERC units}} \text{Heat input}_{\text{prior year}} \ (\text{in mmBtu})}$$

(iii) *Comparison of the emission rate of the non-ERC units in the prior year to the emission rate of the non-ERC units in 1990.* If, as calculated in paragraph (ii) of this section, the prior year system average non-ERC SO_2 emission rate increases above the 1990 system average non-ERC SO_2 emission rate, as calculated below, then a unit's prior year utilization will be restricted in accordance with paragraph (e)(6)(iv) of this section. If not, the ERC units are eligible to receive early reduction credits as calculated in paragraph (e)(6)(v)(A) of this section.

$$\text{Non-ERC unit 1990 emission rate} = \frac{\sum_{\text{non-ERC units}} SO_2\ \text{emissions}_{1990}\ \text{(in pounds)}}{\sum_{\text{non-ERC units}} \text{Heat input}_{1990}\ \text{(in mmBtu)}}$$

(iv) *Calculation of the utilization limit for restricted units.* The limit on utilization for each unit eligible for early reduction credits subject to paragraphs (e)(6) (ii) and (iii) of this section will be calculated as follows:

$$\text{ERC unit's Heat input}_{\text{prior year}}\ \text{(in mmBtu)} \times \left(\frac{\left(\frac{\sum_{\text{ERC units}} \text{Heat input}_{1990}\ \text{(in mmBtu)}}{\sum_{\text{all units}} \text{Heat input}_{1990}\ \text{(in mmBtu)}} \right)}{\left(\frac{\sum_{\text{ERC units}} \text{Heat input}_{\text{prior year}}\ \text{(in mmBtu)}}{\sum_{\text{all units}} \text{Heat input}_{\text{prior year}}\ \text{(in mmBtu)}} \right)} \right)$$

This result, expressed in million Btus, is the restricted utilization of the ERC unit to be used in the calculation of early reduction credits in paragraph (e)(6)(v)(B) of this section.

(v)(A) *Calculation of the unit's early reduction credits where the unit's prior year utilization is not restricted.*

$$\frac{\left(\begin{array}{c}\text{ERC unit's} \\ SO_2\ \text{emission rate}_{1990} \\ \text{(in lb/mmBtu)}\end{array} - \begin{array}{c}\text{ERC unit's} \\ SO_2\ \text{emission rate}_{\text{prior year}} \\ \text{(in lb/mmBtu)}\end{array} \right) \times \begin{array}{c}\text{heat input}_{\text{prior year}} \\ \text{(in mmBtu)}\end{array}}{2000}$$

(B) *Calculation of the unit's early reduction credits where the unit's prior year* utilization is restricted.

$$\frac{\left(\begin{array}{c}\text{ERC unit's} \\ SO_2\ \text{emission rate}_{1990} \\ \text{(in lb/mmBtu)}\end{array} - \begin{array}{c}\text{ERC unit's} \\ SO_2\ \text{emission rate}_{\text{prior year}} \\ \text{(in lb/mmBtu)}\end{array} \right) \times \begin{array}{c}\text{restricted heat input from (iv)} \\ \text{(in mmBtu)}\end{array}}{2000}$$

(vi) The Administrator will allocate to the ERC unit allowances equal to the lesser of the calculated number of credits in paragraphs (e)(6)(v) (A) or (B) of this section and the following limitation:

$$\frac{\text{ERC unit's heat input}_{\text{prior year}} \times \text{the lesser of} \begin{bmatrix} 2.5 \\ \text{or} \\ \text{the most stringent SIP emissions limit (in lb/mmBtu)} \end{bmatrix}}{2000} - \begin{matrix} \text{ERC unit's} \\ SO_2 \text{ emissions}_{\text{prior year}} \\ \text{(in tons)} \end{matrix}$$

[58 FR 15711, Mar. 23, 1993]

§ 73.21 Phase II repowering allowances.

(a) *Repowering allowances.* In addition to allowances allocated under § 73.11, the Administrator will allocate, to each existing unit (under § 72.44(b)(1) of this chapter) with an approved repowering extension plan, allowances for use during the repowering extension period approved under § 72.44(f)(2)(ii) of this chapter (including a prorated allocation for any fraction of a year) equal to:

$$\text{Unit's Repowering Allowances} = \frac{\text{Unit's Baseline} \times \text{the lesser of} \begin{bmatrix} \text{1995 SIP} \\ \text{or} \\ \text{1995 Actual Rate} \end{bmatrix}}{2000} - \text{Unit's Adjusted Basic Allowances}$$

Where:

1995 SIP=Most stringent federally enforceable state implementation plan SO_2 emissions limitation for 1995.

1995 Actual Rate=1995 actual SO_2 emissions rate

Unit's Adjusted Basic Allowances = Unit's Year 2000 Adjusted Basic Allowances as calculated at § 73.11(a)(3)

(b) Upon commencement of commercial operation of a new unit (under § 72.44(b)(2) of this chapter) with an approved repowering extension plan, allowances for use during the repowering extension period approved will end and allocations under § 73.11(a) and (b) for the existing unit will be transferred to the subaccounts for the new unit.

(c)(1) If the designated representative for a repowering unit terminates the repowering extension plan in accordance with § 72.44(g)(1) of this chapter, the repowering allowances allocated to that unit by paragraph (a) of this section will be terminated and any necessary allowances from that unit's account forfeited, calculated in the following manner:

$$\text{Forfeited Repowering Allowances} = \text{Forfeiture Period} \times \left[\frac{\text{Unit's Baseline} \times \text{the lesser of} \begin{bmatrix} \text{1995 SIP} \\ \text{or} \\ \text{1995 Actual Rate} \end{bmatrix}}{2000} - \begin{matrix} \text{Unit's Adjusted} \\ \text{Basic Allowances} \end{matrix} \right]$$

Where:

Forfeiture Period=difference (as a portion of a year) between the end of the approved repowering extension and the end of the repowering extension under § 72.44(g)(1)(ii)

1995 SIP=Most stringent federally enforceable state implementation plan SO_2 emissions limitation for 1995.

1995 Actual Rate=1995 actual SO_2 emissions rate

Unit's Adjusted Basic Allowances = Unit's Year 2000 Adjusted Basic Allowances as calculated at § 73.11(a)(3)

(2) The Administrator will reallocate the allowances forfeited in paragraph (b)(1) of this section to all Table 2 and 3 units' years 2000 through 2009 subaccounts in the following manner:

$$\text{Reallocation} = \frac{\text{Forfeited Repowering Allowances}}{10} \times \frac{\text{Unit's Repowering Deduction}}{\text{Sum of All Table 2 and 3 Units' Repowering Deductions}}$$

[53 FR 15713, Mar. 23, 1993]

§§ 73.22—73.24 [Reserved]

§ 73.25 Phase I extension reserve.

The Administrator will initially allocate 3.5 million allowances to the Phase I Extension Reserve account of the Allowance Tracking System. Allowances from this Reserve will be allocated to units under § 72.42 of this chapter. Allowances remaining in the Phase I Extension Reserve account following allocation of all extension allowances under § 72.42 of this chapter will remain in the Reserve.

[58 FR 3687, Jan. 11, 1993]

§ 73.26 Conservation and renewable energy reserve.

The Administrator will allocate 300,000 allowances to the Conservation and Renewable Energy Reserve subaccount of the Acid Rain Data System. Allowances from this Reserve will be allocated to units under subpart F of this part. Termination of this Reserve and reallocation of allowances will be made under § 73.80(c).

[53 FR 15714, Mar. 23, 1993]

§ 73.27 Special allowance reserve.

(a) *Establishment of Reserve.* (1) The Administrator will allocate 150,000 allowances annually for calendar years 1995 through 1999 to the Auction Subaccount of the Special Allowance Reserve.

(2) The Administrator will allocate 200,000 allowances annually for calendar years 2000 and each year thereafter to the Auction Subaccount of the Special Allowance Reserve.

(3) The Administrator will allocate 50,000 allowances annually for calendar years 2000 and each year thereafter to the Direct Sale Subaccount of the Special Allowance Reserve.

(b) *Distribution of proceeds.* (1) Monetary proceeds from the auctions and sales of allowances from the Special Allowance Reserve (under subpart E of this part) for use in calendar years 1995 through 1999 will be distributed to the designated representative of the unit according to the following equation:

unit proceeds=(Column B of Table 1 of section 73.10/150,000) × total proceeds

(2) Until June 1, 1998, monetary proceeds from the auctions and sales of allowances from the Special Allowance Reserve (under subpart E of this part) for use in calendar years 2000 through 2009 will be distributed to the designated representative of each unit listed in Table 2 or 3 according to the following equations:

$$\text{Unit Proceeds} = \left[\frac{\text{Table 2 Column B}}{250000}\right] \times \text{Total Proceeds}$$

(3) On or after June 1, 1998, monetary proceeds from the auctions and sales of allowances from the Special Allowance Reserve (under subpart E of this part) for use in calendar years 2000 through 2009 will be distributed to the designated representative of each unit listed in Table 2 or 3 according to the following equation:

$$\text{Unit Proceeds} = \left[\frac{\text{Table 3 Column B}}{250000}\right] \times \text{Total Proceeds}$$

(4) Until June 1, 1998, monetary proceeds from the auctions and sales of allowances from the Special Allowance Reserve (under subpart E of this part) for use in calendar years 2010 and thereafter will be distributed to the designated representative of each unit listed in Table 2 or 3 according to the following equations:

$$\text{Unit Proceeds} = \left[\frac{\text{Table 2 Column G}}{250000}\right] \times \text{Total Proceeds}$$

$$\text{Unit Proceeds} = \left[\frac{\text{Table 3 Column G}}{250000}\right] \times \text{Total Proceeds}$$

(5) On or after June 1, 1998, monetary proceeds from the auctions and sales of allowances from the Special Allowance Reserve (under subpart E of this part) for use in calendar years 2010 and thereafter will be distributed to the designated representative of each unit listed in Table 2 or 3 according to the following equation:

$$\text{Unit Proceeds} = \left[\frac{\text{Unit's Special Allowance Deduction under §73.11(b)(5)}}{250000}\right] \times \text{Total Proceeds}$$

(c) *Reallocation of allowances.* (1) Allowances remaining in the Special Allowance Reserve following the annual auctions and sales (under subpart E of this part) for use in calendar years 1995 through 1999 will be reallocated to the unit's Allowance Tracking System Account according to the following equation:

unit allowances = (Column B of Table 1 of section 73.10/150,000) × Allowances remaining

(2) Until June 1, 1998, allowances, for use in calendar years 2000 through 2009, remaining in the Special Allowance Reserve at the end of each year, following that year's auction and sale (under subpart E of this part) will be reallocated to the unit's Allowance Tracking System Account according to the following equations:

$$\text{Unit Allowances} = \left[\frac{\text{Table 2 Column B}}{250000}\right] \times \text{Allowances Remaining}$$

$$\text{Unit Allowances} = \left[\frac{\text{Table 3 Column B}}{250000}\right] \times \text{Allowances Remaining}$$

(3) On or after June 1, 1998, allowances, for use in calendar years 2000 through 2009, remaining in the Special Allowance Reserve at the end of each year, following that year's auction and sale (under subpart E of this part) will be reallocated to the unit's Allowance Tracking System Account according to the following equation:

$$\text{Unit Allowances} = \left[\frac{\text{Unit's Special Allowance Deduction under §73.11(a)(5)}}{250000}\right] \times \text{Allowances Remaining}$$

(4) Until June 1, 1998, allowances, for use in calendar years 2010 and thereafter, remaining in the Special Allowance Reserve at the end of each year following that year's auction and sale (under subpart E of this part) will be reallocated to the unit's Allowance Tracking System Account according to the following equations:

$$\text{Unit Allowances} = \left[\frac{\text{Table 2 Column G}}{250000}\right] \times \text{Allowances Remaining}$$

$$\text{Unit Allowances} = \left[\frac{\text{Table 3 Column G}}{250000}\right] \times \text{Allowances Remaining}$$

(5) On or after June 1, 1998, allowances, for use in calendar years 2010 and thereafter, remaining in the Special Allowance Reserve at the end of each year, following that year's auction and sale (under subpart E of this part) will be reallocated to the unit's Allowance Tracking System Account according to the following equation:

$$\text{Unit Allowances} = \left[\frac{\text{Unit's Special Allowance Deduction under §73.11(b)(5)}}{250000}\right] \times \text{Allowances Remaining}$$

(d) *Calculation rounding.* All proceeds under this section shall be distributed as whole dollars. All calculations for such allowances shall be rounded down for decimals less than .5 and up for decimals of .5 or greater.

(e) *Achieving exact totals.* (1) If the sum of the proceeds to be distributed under paragraph (b) of this section exceeds the total proceeds or the allowances to be reallocated under paragraph (c) of this section exceeds the allowances remaining, then the Administrator will withdraw one dollar or allowance from each unit, beginning with the unit receiving the largest number of dollars or allowances, in descending order, until the distribution balances with the proceeds and the reallocated allowances balance with the remaining allowances.

(2) If the sum of the proceeds to be distributed under paragraph (b) of this section is less than the total proceeds or the allowances to be reallocated under paragraph (c) of this section is less than the allowances remaining, then EPA will distribute one dollar or allowance for each unit, beginning with the unit receiving the largest number of dollars or allowances, in descending order, until the distribution balances with the proceeds and the reallocated allowances balance with the remaining allowances.

[58 FR 3687, Jan. 11, 1993, as amended at 58 FR 15714, Mar. 23, 1993]

Subpart C—Allowance Tracking System

SOURCE: 58 FR 3691, Jan. 11, 1993, unless otherwise noted.

§73.30 Allowance tracking system accounts.

(a) *Nature and function of unit accounts.* The Administrator will establish accounts for all affected units pursuant to §73.31 (a) and (b). All allocations of allowances pursuant to subparts B, E, and F of this part and part 72 of this chapter, transfers of allowances made pursuant to subparts C and

D, and deductions of allowances made for purposes of offsetting emissions pursuant to § 73.35 (b) and (d) and parts 72, 75, and 77 of this chapter will be recorded in the unit's Allowance Tracking System account.

(b) *Nature and function of general accounts.* Transfers of allowances held for any person other than an affected unit, made pursuant to subparts C, D, E, F, and G of this part will be recorded in that person's Allowance Tracking System account established pursuant to § 73.31(c).

[58 FR 3687, Jan. 11, 1993; 58 FR 40747, July 30, 1993]

§ 73.31 Establishment of accounts.

(a) *Existing affected units.* The Administrator will establish an Allowance Tracking System account and allocate allowances for each unit that is, or will become, an existing affected unit pursuant to sections 404(a) or 405 of the Act and § 72.6 of this chapter.

(b) *New units.* Upon receipt of a complete certificate of representation for the designated representative for a new unit pursuant to part 72, subpart B of this chapter, the Administrator will establish an Allowance Tracking System account for the unit.

(c) *General accounts.* (1) Any person may apply to open an Allowance Tracking System account for the purpose of holding and transferring allowances. Such application shall be submitted to the Administrator in a format to be specified by the Administrator by means of the Allowance Account Information Form, or by providing the following information in a similar format:

(i) Name and title of the authorized account representative and alternate authorized account representative (if any) pursuant to § 73.33;

(ii) Mailing address, telephone number and facsimile transmission number (if any) of the authorized account representative and alternate authorized account representative (if any);

(iii) Organization or company name (if applicable) and type of organization (if applicable);

(iv) A list of all persons subject to a binding agreement for the authorized account representative to represent their ownership interest with respect to the allowances held in the general account and which shall be amended and resubmitted within 30 days following any transaction giving rise to any change of the list of persons subject to the binding agreement;

(v) A certification statement by the authorized account representative and alternate authorized account representative (if any) that reads ''I certify that I was selected under the terms of an agreement that is binding on all persons who have an ownership interest with respect to allowances held in the Allowance Tracking System account. I certify that I have all necessary authority to carry out my duties and responsibilities on behalf of the persons with an ownership interest and that they shall be fully bound by my actions, inactions, or submissions under 40 CFR part 73. I shall abide by any fiduciary responsibilities assigned pursuant to the binding agreement. I am authorized to make this submission on behalf of the persons with an ownership interest for whom this submission is made. I certify under penalty of law that I have personally examined and am familiar with the information submitted in this document and all its attachments. Based on my inquiry of those individuals with primary responsibility for obtaining the information, I certify that the information is to the best of my knowledge and belief true, accurate, and complete. I am aware that there are significant penalties for submitting false material information, or omitting material information, including the possibility of fine or imprisonment for violations.'';

(vi) The signature of the authorized account representative and the alternate authorized account representative (if any); and

(vii) The date of the signature of the authorized account representative and the alternate authorized account representative (if any).

(2) Upon receipt of such complete application, the Administrator will establish an Allowance Tracking System account for the person or persons identified in the application.

(3) No allowance transfers will be recorded for a general account until the Administrator has established the new account.

(d) *Account identification.* The Administrator will assign a unique identifying number to each account established pursuant to this section.

[58 FR 3687, Jan. 11, 1993; 58 FR 40747, July 30, 1993]

§ 73.32 Allowance account contents.

Each allowance account will include, at a minimum, the following:

(a) The name, address, telephone number and facsimile transmission number, if any, of the authorized account representative; and

(1) In the case of a unit account, a list of all persons identified as owners of record of the unit in § 72.24(a)(3) of this chapter, or

(2) In the case of a general account, a list of all persons subject to the binding agreement for the authorized account representative to represent their ownership interest with respect to allowances, as identified in accordance with § 73.31(c);

(b) A list of transfers of allowances to, and from, the account, including the identity of the transferror and transferee accounts;

(c) In the case of a unit account for an existing affected unit, beginning in 1995, a compliance subaccount;

(d) In the case of a unit account for a new unit, a compliance subaccount;

(e) In the case of a general account, a current year subaccount;

(f) Future year subaccounts for each of the 30 calendar years following the later of 1995 or the current calendar year;

(g) In the case of a unit account, the current total of sulfur dioxide emissions in tons for the current calendar year as reported to date pursuant to part 75 of this chapter.

[58 FR 3687, Jan. 11, 1993; 58 FR 40747, July 30, 1993]

§ 73.33 Authorized account representative.

(a) Following the establishment of an Allowance Tracking System account, all matters pertaining to the account, including, but not limited to, the deduction and transfer of allowances in the account, shall be undertaken only by the authorized account representative.

(b) *Authorized account representative identification.* The Administrator will assign a unique identifying number to each authorized account representative or alternate authorized account representative identified pursuant to § 73.31(c).

(c) *Notification of parties subject to the binding agreement.* The authorized account representative for a general account shall notify, in writing, all persons who have an ownership interest with respect to the allowances held in the account of any Acid Rain Program submission required by this part or in a procedure under part 78 of this chapter, by the date of submission. Each person who has an ownership interest with respect to the allowances held in the account may expressly waive his or her right to receive such notification.

(d) *General account alternate authorized account representative.* Any application for opening a general account may designate one alternate authorized account representative to act on behalf of the certifying authorized account representative, in the event the authorized account representative is absent or otherwise not available to perform actions and duties under this part. The alternate shall be a natural person and shall be authorized, provided that the conditions and procedures specified in § 73.31(c)(1) are met.

(1) The alternate authorized account representative may be changed at any time by the authorized account representative upon receipt by the Administrator of a new complete application as required in § 73.31(c);

(2) The alternate authorized account representative shall be subject to the provisions of this part applicable to authorized account representatives;

(3) Whenever the term ''authorized account representative'' is used in this part it shall be construed to include the alternate authorized account representative, unless such a construction would be illogical from the context; and

(4) Any action, representation or failure to act by the alternate authorized account representative when acting in that capacity shall be deemed to be an action of the authorized account representative, with all the rights, duties, and responsibilities pertaining thereto.

(e) *Changes to the general account authorized account representative.* An authorized account representative for a general account may be succeeded by any person who submits an application pursuant to § 73.31(c). The actions of an authorized account representative for a general account shall be binding on any successor.

(f) *Objections to the authorized account representative.* Except for a certification pursuant to paragraph (e) of this section, no objection or other communication submitted to the Administrator concerning any submission to the Administrator by the authorized account representative shall affect the recordation of transfers submitted by the authorized account representative pursuant to subpart D of this part. Neither the United States, the Administrator, nor any permitting authority will adjudicate any dispute between and among persons concerning any submission to the Administrator by the authorized account representative; any actions of the authorized account representative; or any other matter arising directly or indirectly from the certification, actions or representations of the authorized account representative.

§ 73.34 Recordation in accounts.

(a) *Recordation in compliance subaccounts.* At the beginning of 1995 and, in the case of each year thereafter, after the Administrator has made all deductions from an affected unit's compliance subaccount pursuant to § 73.35(b), the Administrator will record in the compliance subaccount the allowances held in the future year subaccount for the year corresponding to the current calendar year. The future year subaccount for the new 30th year will be established at the same time and include the allowances allocated for the unit for that year pursuant to subpart B of this part.

(b) *Recordation in current year subaccounts.* At the beginning of 1995 and each year thereafter, the Administrator will record in the current year subaccount the allowances held in the future year subaccount for the year corresponding to the current calendar year.

(c) *Recordation in subaccounts.* Allowances in each compliance, current year, and future year subaccounts will reflect:

(1) All allowances allocated or deducted for the unit for the year pursuant to subpart B of this part;

(2) All allowances allocated or deducted pursuant to §§ 72.41, 72.42, 72.43, and 72.44 and part 74 of this chapter;

(3) All allowances allocated pursuant to subparts F and G of this part;

(4) All allowances recorded as a result of purchases or returns from the annual auctions or direct sale pursuant to subpart E of this part;

(5) All allowances recorded or deducted as a result of allowance transfers recorded pursuant to subpart D of this part; and

(6) All allowances deducted or returned pursuant to §§ 73.35(d), 72.91 and 72.92, part 74, and part 77 of this chapter.

(d) *Serial numbers for allocated allowances.* Upon the allocation of allowances to an account, including allowances contained in reserves as provided in subpart B of this part, the Administrator will assign each allowance a unique identification number that will include digits identifying the allowance's compliance use date.

[58 FR 3691, Jan. 11, 1993, as amended at 60 FR 17114, Apr. 4, 1995]

§ 73.35 Compliance.

(a) *Allowance transfer deadline.* No allowance shall be deducted for purposes of compliance with an affected unit's sulfur dioxide Acid Rain emissions limitation requirements pursuant to title IV of the Act and paragraph (b) of this section unless:

(1) The compliance use date of the allowance is no later than the year in which the unit's SO_2 emissions occurred; and

(2) Such allowance is recorded in the compliance subaccount, or its transfer to the unit's compliance subaccount is submitted correctly pursuant to subpart D for recordation in the compliance subaccount for the unit by not later than the allowance transfer deadline of January 30 of the calendar year following the year for which compliance is being established in accordance with the requirements of subpart D of this part.

(b) *Deductions for compliance.* (1) Except as provided in paragraph (d) of this section, following the recordation of transfers submitted correctly for recordation in the compliance subaccount pursuant to paragraph (a) of this section and subpart D of this part, the Administrator will deduct allowances from each affected unit's compliance subaccount in accordance with the allowance deduction formula in §72.95 of this chapter, or, for opt-in sources, the allowance deduction formula in §74.49 of this chapter, and any correction made under §72.96 of this chapter.

(2) The Administrator will make deductions until either the number of allowances deducted is equal to the amount calculated in accordance with §72.95 of this chapter, or, for opt-in sources, in accordance with §74.49 of this chapter, as modified under §72.96 of this chapter or until no more allowances remain in the compliance subaccount.

(c)(1) *Identification of allowances by serial number.* By no later than sixty days after the end of the calendar year, the authorized account representative for each unit account may identify by serial number the allowances to be deducted from the compliance subaccount for purposes of compliance with the unit's sulfur dioxide emissions limitation requirements. Such identification shall be made pursuant to part 72 of this chapter.

(2) *First-in, first-out.* In the absence of an identification or in the case of a partial identification of allowances by serial number, as provided for in paragraph (b)(1) or (d) of this section, the Administrator will deduct allowances on a first-in, first-out (FIFO) accounting basis beginning with those allowances with the earliest compliance use date originally allocated for the unit and recorded in its compliance subaccount. Following the deduction of all originally allocated allowances from the compliance subaccount, the Administrator will deduct those allowances that were transferred and recorded in the unit's compliance subaccount pursuant to subpart D of this part, beginning with those with the earliest date of recordation.

(d) *Deductions for excess emissions.* Pursuant to §77.4 of this chapter, and following the process of recordation set forth in §73.34(a) of this part, the Administrator will deduct allowances for each unit with excess emissions for the preceding calendar year in an amount equal to the unit's excess emissions tonnage.

(e) *Deductions for units sharing a common emission stack.* In the case of units sharing a common emission stack and have emissions that are not individually monitored pursuant to part 75 of this chapter, the authorized account representative may identify the percentage of allowances to be deducted from each unit's compliance subaccount. Such identification shall be made pursuant to part 72, subpart I of this chapter. In the absence of an identification, the Administrator will deduct an equal percentage of allowances from each unit's compliance subaccount.

[58 FR 3691, Jan. 11, 1993, as amended at 60 FR 17114, Apr. 4, 1995]

§73.36 Banking.

(a) *Unit accounts.* Any allowance in a compliance subaccount not deducted pursuant to §73.35 will remain in the compliance subaccount.

(b) *General accounts.* In the case of a general account, any allowances in the current year subaccount at the end of the current calendar year will remain in the current year subaccount.

§73.37 Account error and dispute resolution.

(a) *Claim of error.* The authorized account representative may notify the Administrator of any claim that the Administrator made an error in recording transfer information that was submitted correctly pursuant to subpart D of this part, provided that such claim of error notification is submitted to the Administrator by no later than 15 business days following the date mark of the notification by the Administrator pursuant to actions taken under §73.37(d) or §73.53. Such claim of error notification shall be in writing and shall include:

(1) A description of the error alleged to have been made by the Administrator;

(2) A proposed correction of the alleged error;

(3) Any supporting documentation or other information concerning the alleged error and proposed correction; and

(4) Certification by the signature of and the date of the signature of the authorized account representative.

The Administrator will not act on claim of error notifications received after the stated deadlines (except as provided under paragraph (f) of this section, or that do not contend that the Administrator made an error in recordation.

(b) *EPA action.* The Administrator, at the Administrator's sole discretion based on documentation provided, will determine what changes, if any, will be made to the accounts subject to the alleged error. Not later than 20 business days after receipt of a claim of error notification pursuant to paragraph (a) of this section, the Administrator will submit to the authorized account representative a written response stating:

(1) The determination made and any action taken by, the Administrator; and

(2) The reasons for such action.

(c) *Administrative appeals procedure.* Following the Administrator's action pursuant to paragraph (b) of this section, the authorized account representative may appeal the Administrator's action through the administrative appeals procedure pursuant to part 78 of this chapter.

(d) *EPA corrections.* The Administrator may, without prior notice of a claim of error and in the Administrator's sole discretion, correct any errors in any account on his or her own motion. The Administrator will notify the authorized account representative by no later than 20 business days following any such corrections.

(e) *Excess emissions requirements.* The filing of a claim of error notification pursuant to paragraph (a) of this section, or the pendency of the Administrator's action pursuant to paragraph (b) of this section, shall not affect a unit's obligations under part 77 of this chapter.

(f) *Waiver of deadline.* The Administrator may, in his or her discretion, accept claim of error submissions made following the deadlines imposed in this section upon a demonstration by the authorized account representative of good cause for the delay. The finding of whether good cause exists shall be in the sole discretion of the Administrator. Appeals of a decision by the Administrator under this paragraph will be addressed pursuant to the administrative appeals process in part 78 of this chapter.

§ 73.38 Closing of accounts.

(a) *General account.* The authorized account representative of a general account may instruct the Administrator to close the general account by submitting an allowance transfer, pursuant to § 73.50 and § 73.52, requesting the transfer of all allowances held in the account to one or more other accounts in the Allowance Tracking System, and by submitting in writing, with the signature of the authorized account representative, a request to delete the general account from the Allowance Tracking System.

(b) *Inactive accounts.* If a general account shows no activity for a period of a year or more and does not contain any allowances in its subaccounts, the Administrator will notify the account's authorized account representative that the account will be closed and eliminated from the Allowance Tracking System following 20 business days from the date the notice is sent. The account will be closed following the 20-day period, unless the Administrator receives and records a request for the transfer of allowances into the account pursuant to § 73.52 before the end of the 20-day period, or the authorized account representative submits, in writing, demonstration of good cause as to why the inactive account should not be closed. The finding of whether good cause exists shall be in the sole discretion of the Administrator.

Subpart D—Allowance Transfers

SOURCE: 58 FR 3694, Jan. 11, 1993, unless otherwise noted.

§73.50 Scope and submission of transfers.

(a) *Scope of transfers.* Except as provided in §73.51 and §73.52, the Administrator will record transfers of an allowance to and from Allowance Tracking System accounts, including, but not limited to, transfers of an allowance to and from contemporaneous future year subaccounts, and transfers of an allowance to and from compliance subaccounts and current year subaccounts, and transfers of all allowances allocated for a unit for each calendar year, in perpetuity.

(b) *Submission of transfers.* (1) Authorized account representatives seeking recordation of an allowance transfer shall request such transfer by submitting to the Administrator, in a format to be specified by the Administrator, an Allowance Transfer Form. To be considered correctly submitted the request for transfer shall include:

(i) The numbers identifying both the transferror and transferee accounts;

(ii) A specification by serial number of each allowance to be transferred, or correct indication on the allowance transfer where a request involves the transfer of the unit's allowances in perpetuity;

(iii) Signatures of the authorized account representatives of both the transferror and transferee accounts;

(iv) The dates of the signatures of the authorized account representatives;

(v) The numbers identifying the authorized account representatives for both the transferror and transferee account; and

(vi) Where the transferee account has not been established, information as required pursuant to §73.31 (b) or (c).

(2) Transfers of allowances to or from compliance subaccounts submitted for recordation following the allowance transfer deadline will not be recorded until after completion of the process of recordation set forth in §73.34(a).

§73.51 Prohibition.

Except as provided in §73.34(a), the Administrator will not record a transfer of allowances from a future year subaccount to a subaccount for an earlier year.

§73.52 EPA recordation.

(a) *General recordation.* Except as provided in §73.50, §73.51, and this paragraph (a), the Administrator will record an allowance transfer by no later than five business days following receipt of an allowance transfer request pursuant to §73.50, by moving each allowance from the transferror account to the transferee account as specified by the request pursuant to §73.50, provided that:

(1) The information submitted pursuant to §73.50 is complete;

(2) The transferror account includes each allowance identified by serial number in the allowance transfer request submitted pursuant to §73.50, except when a request for transfer of the unit's allowances in perpetuity is indicated correctly on the allowance transfer submission;

(3) If the allowances identified by serial number specified pursuant to §73.50(b)(1)(ii) are subject to the limitation on transfer imposed pursuant to §72.44(h)(1)(i) of this chapter, §74.42 of this chapter, or §74.47(c) of this chapter, the transfer is in accordance with such limitation; and

(4) The transfer meets all applicable requirements of this subpart.

(b) Where an allowance transfer submitted for recordation fails to meet the requirements of this subpart, the Administrator will not record such transfer.

[58 FR 3694, Jan. 11, 1993, as amended at 60 FR 17114, Apr. 4, 1995]

§73.53 Notification.

(a) *Notification of recordation.* The Administrator will notify each party to an allowance transfer within five business days following the recordation of the transfer. Notice will be given in writing or in a format to be specified by the Administrator, to the authorized account representatives of both the transferror and transferee accounts.

(b) *Notification of non-recordation.* By no later than five business days following receipt of an allowance transfer request by the Administrator, the Administrator will notify, in writing or in

a format to be specified by the Administrator, the authorized account representatives of the accounts subject to the allowance transfer request submitted for recordation of:

(1) A decision not to record the transfer, and

(2) The reasons for such non-recordation.

(c) Nothing in this section shall preclude the submission of an allowance transfer request for recordation following notification of non-recordation.

Subpart E—Auctions, Direct Sales, and Independent Power Producers Written Guarantee

SOURCE: 56 FR 65601, Dec. 17, 1991, unless otherwise noted.

§ 73.70 Auctions.

(a) *Allowances to be auctioned.* Every year the Administrator will auction allowances from the Auction Subaccount, established pursuant to subpart B of this part, according to the following schedule:

TABLE I.—ALLOWANCE SCHEDULE FOR AUCTIONS

Year of purchase	Spot auction	Advance auction	Advance auction*
1993	50,000 [a]	100,000 [b]	
1994	50,000 [a]	100,000 [b]	25,000 [c]
1995	50,000 [a]	100,000 [b]	25,000 [c]
1996	150,000	100,000 [b]	25,000 [c]
1997	150,000	125,000 [b]	25,000 [c]
1998	150,000	125,000 [b]	
1999	150,000	125,000 [b]	
2000 and after	125,000	125,000 [b]	

[a] Not usable until 1995.
[b] Not usable until 7 years after purchase.
[c] Not usable until 6 years after purchase.
*These are unsold advance allowances from the direct sale program for 1993, 1994, 1995, and 1996 respectively.

In addition to the allowances listed above, the Administrator will auction allowances pursuant to paragraph (c) of this section and § 73.72(q) in the amounts and at the times provided for therein.

(b) *Timing of the auctions.* The spot auction and the advance auction, and, if required pursuant to § 73.72(q), an additional advance auction will be held on the same day, selected each year by the Administrator, but no later than March 31 of each year. The Administrator will conduct one spot auction and one advance auction, and, if required to § 73.72(q), one additional advance auction in each calendar year.

(c) *Submittal for other allowances for auction.* Authorized account representatives may offer allowances for sale at auction, provided that allowances are dated for the year in which they are offered or for any previous year or for seven years following the year in which they are offered. Such authorized account representatives may specify a minimum price for the allowances offered at the auctions. The authorized account representative must notify the Administrator fifteen business days prior to the auctions, using the SO_2 Allowance Offer Form published by the Administrator, or by means of electronic communication if the Administrator, following public notice, so requires or permits at some future time. The notification shall include:

(1) The compliance use date of the allowances offered;

(2) The number of allowances to be sold and any other information identifying the allowances offered that may be required by subpart C of this part;

(3) Any minimum price in whole dollars; and

(4) Whether the authorized account representative is willing to sell fewer allowances than the number stated in paragraph (c)(2) of this section, if the full amount cannot be sold. After notification, the Administrator will deduct allowances from the appropriate Allowance Tracking System account from which allowances are being offered and place them in a separate subaccount for such allowances.

(d) *Conduct of the auctions.* (1) The Administrator will rank all bids in descending order of bid price starting with the highest. Allowances will be sold from the Auction Subaccount in this order at the amounts specified in the bids until there are no allowances in the subaccount. If all allowances are sold from the Auction Subaccount, including unsold allowances transferred from the preceding year's direct sale, and if bids still remain, the Administrator will sell allowances offered by the authorized account representatives, beginning with those offered at the lowest minimum price. Allowances offered at the lowest minimum price will be matched with the highest bid

remaining after the Auction Subaccount is exhausted. Sales of offered allowances, including, but not limited to, allowances offered by more than one offeror at the same minimum bid price, will continue in ascending order of minimum price, starting with the lowest, and descending order of remaining bids, starting with the highest, until:

(i) All allowances are sold,

(ii) No bids remain, or

(iii) Prices of remaining bids do not meet minimum prices required in remaining offers.

(2) In the event that there is more than one bid submitting the same price and the total number of allowances requested in all such bids exceeds the number of allowances remaining, the Administrator will award the remaining allowances by lottery to such bidders.

(3) In the event that there are more offers of sale at the minimum price than there are bids meeting that price, allowances from all such offers will be sold to cover the bids, according to each such offeror's pro rata share of all allowances so offered.

(4) In the event that fewer allowances remain than are requested in a bid, the Administrator will sell such remaining allowances to the bidder provided that, pursuant to § 73.71(b)(4), the bid states the bidder's willingness to purchase fewer allowances than requested in the bid.

(5) In the event that fewer than all allowances included in an offer for sale would be sold to remaining bids based on price, the Administrator will sell such allowances to the bidder(s), provided that, pursuant to § 73.70(c)(4), the offer states the offeror's willingness to sell fewer allowances than were offered for sale.

(e) *Announcement of results.* Following each auction, the Administrator will publish the names of winning bidders and their bids, the amounts of losing bids, and the lowest price at which allowances are sold. The Administrator will announce the results of each auction through the Allowance Tracking System. The results will also be published in the FEDERAL REGISTER and in the Commerce Business Daily.

(f) *Transfer of allowances.* Allowances will be transferred from the Auction Subaccount and from the subaccount for allowances offered by authorized account representatives to the Allowance Tracking System accounts of successful bidders as soon as payment is collected by the Administrator.

(g) *Return of unsuccessful bids.* The Administrator will return payment to unsuccessful bidders and to bidders unwilling to purchase fewer allowances than requested following the conclusion of each auction.

(h) *Transfer of proceeds.* The Administrator will return all proceeds from the auction as follows:

(1) Allowances auctioned from the Auction Subaccount. Not later than 90 days following each auction, the Administrator will pay a pro rata share of the proceeds of each auction to the authorized account representative of each unit from whose annual allowance allocation allowances were withheld for the purposes of establishing the Auction Subaccount. Each unit's pro rata share will be calculated pursuant to regulations to be promulgated under subpart B.

(2) Allowances contributed from others. Not later than 90 days following each auction, the Administrator will transfer the full amount of the proceeds of each sale of allowances offered by authorized account representatives to such representatives. Proceeds from the sale of allowances that were offered with the same specified minimum price will be distributed according to each such offeror's pro rata share of the sale of such allowances.

(3) The Administrator will pay no interest on any payment made pursuant to paragraphs (h) (1) and (2) of this section.

(i) *Return of unsold allowances.* The Administrator will return all unsold allowances from the auction as follows:

(1) Allowances in the Auction Subaccount. At the conclusion of each auction, the Administrator will transfer to the Allowance Tracking System account of each unit specified in paragraph (h)(1) of this section its pro rata share of any allowances remaining in the Auction Subaccount. Each unit's

pro rata share will be calculated pursuant to regulations to be promulgated under subpart B.

(2) Allowances contributed from others. At the conclusion of each auction, the Administrator will return unsold allowances to the appropriate offerors' Allowance Tracking System accounts. Any unsold allowances that were offered with the same specified minimum price will be distributed according to each such offeror's pro rata share of all such allowances offered.

[56 FR 65601, Dec. 17, 1991, as amended at 61 FR 28763, June 6, 1996]

EFFECTIVE DATE NOTE: At 61 FR 28763, June 6, 1996, § 73.70 was amended by revising table I in paragraph (a), effective August 5, 1996. For the convenience of the user, the superseded text is set forth as follows:

§ 73.70 Auctions.

(a) * * *

TABLE 1—ALLOWANCE SCHEDULE FOR AUCTIONS

Year of purchase	Spot auction	Advance auction
1993	[b] 50,000	[a] 100,000
1994	[b] 50,000	[a] 100,000
1995	50,000	[a] 100,000
1996	150,000	[a] 100,000
1997	150,000	[a] 100,000
1998	150,000	[a] 100,000
1999	150,000	[a] 100,000
2000 and after	100,000	[a] 100,000

[a] Not useable until 7 years after purchase.
[b] Not useable until 1995.

* * * * *

§ 73.71 Bidding.

(a) *Who may participate in the auctions.* Any person may participate in the auctions by submitting a bid or bids pursuant to this section.

(b) *Bidding.* Sealed bids shall be sent to the Administrator using the Bid Form for SO_2 Allowance Auctions, or some method of electronic transfer if the Administrator, following public notice, so requires or permits at some future time. The bid form shall state:

(1) The number of allowances sought and the price;

(2) Whether spot or advance allowances are sought;

(3) Allowance Tracking System account number;

(4) Whether the bidder is willing to purchase fewer allowances than the number of allowances stated in (b)(1) of this section if the full amount is not available. Where the bidder holds no Allowance Tracking System account, a New Account/New Authorized Account Representative Form must accompany the bid. New account information shall include at a minimum: Name, address, telephone number, facsimile number, organization or company name (if applicable), type of organization, and the authorized account representative for purposes of the account.

(c) *Payment.* Each bid must include a certified check or letter of credit for the total bid price, or may specify a method of electronic transfer or other method of payment, if the Administrator, following public notice, so requires or permits at some future time. The certified check should be made payable to the U.S. EPA. To meet the requirements of this paragraph bidders must submit a completed SO_2 Allowance Auction Letter of Credit Form. If such Form is used, the Administrator must receive full payment for allowances awarded at the auctions, either by wire transfer or certified check, no later than 2 business days after the results of the auction are announced in the Allowance Tracking System.

(d) *Bid amount and number of bids.* Bidders may request any number of allowances up to the amount of allowances available for auction. Any person may submit more than one bid in each auction, provided that each bid meets the requirements of this section.

(e) *Submission of bids.* The Administrator will publish in the FEDERAL REGISTER and in the Commerce Business Daily the address of where to submit bids and payment not later than 60 calendar days before each auction.

(f) *Deadline for bids.* All bids must be revised by the Administrator no later than 3 business days prior to the date of the auctions.

§ 73.72 Direct sales.

Allowances that were formerly part of the direct sale program, which has been terminated under § 73.73(b), will be

included in the annual allowance auctions in accordance with § 73.70(a).

[61 FR 28763, June 6, 1996]

EFFECTIVE DATE NOTE: At 61 FR 28763, June 6, 1996, § 73.72 was revised, effective Aug. 5, 1996. For the convenience of the user, the superseded text is set forth as follows:

§ 73.72 Direct sales.

(a) *Allowances to be sold.* The Administrator will sell allowances every year according to the following schedule:

TABLE 1—ALLOWANCE SCHEDULE FOR THE DIRECT SALE

Year of purchase	Spot sale	Advance sale
1993		[a] 25,000
1994		[a] 25,000
1995		[a] 25,000
1996		[a] 25,000
1997		[a] 25,000
1998		[a] 25,000
1999		[a] 25,000
2000 and after	25,000	[a] 25,000

[a] Not useable until 7 years after purchase.

(b) *Adjustment of the direct sale schedule.* The schedule listed in paragraph (a) of this section will be adjusted to reflect allowances subject to IPP written guarantees pursuant to § 73.74.

(c) *Price.* Allowances in the direct sale will be sold at $1,500 per allowance, adjusted by the Consumer Price Index (CPI). The following formula will be used each year to calculate the price:

$$\$1{,}500 \times \left(1 + \frac{\text{CPI (year)} - \text{CPI (1990)}}{\text{CPI (1990)}} \right)$$

(d) *Form and timing of the direct sale.* The Administrator will begin accepting applications for the direct sale on June 1st of each calendar year and will continue to accept applications up to 10 calendar days prior to the allowance transfer deadline.

(e) *Who may purchase from the direct sale.* Any person may apply to purchase allowances from the direct sale.

(f) *Amount allowed to purchase.* Applicants may request to purchase any number of allowances up to the amount available for sale in the Direct Sale Subaccount.

(g) *Request to purchase allowances.* Applicants shall submit the Direct Sale Application Form to request to purchase allowances from the Administrator, or shall make such request by some method of electronic transfer if the Administrator, following public notice, so requires or permits at some future time. The Direct Sale Application Form shall state:

(1) The number of allowances sought;

(2) Whether spot or advance allowances are sought;

(3) The Allowance Tracking System account number; and

(4) Whether the applicant is willing to purchase fewer allowances than the number of allowances stated in (g)(1) of this section, if the full amount is not available. Where the applicant holds no Allowance Tracking System account, a New Account/New Authorized Account Representative Form must accompany the application. New account information shall include at a minimum: Name, address, telephone number, facsimile number, organization or company name (if applicable), type of organization, and the authorized account representative for purposes of the account.

(h) *Submission of direct sale applications.* The Administrator will publish in the FEDERAL REGISTER and in the Commerce Business Daily the address of where to submit Direct Sale Application Forms no later than 60 calendar days before each direct sale.

(i) *First come, first served.* Applications will be approved in order of receipt, indicated by the date and time stamped on the applications upon arrival at the destination indicated pursuant to paragraph (h) of this section.

(j) *Partial fulfillment of requests.* In the event the number of allowances requested for a purchase exceeds the number of allowances remaining in the Direct Sale Subaccount, the Administrator will approve the request for the number of allowances remaining, provided that, pursuant to paragraph (g)(4) of this section, the application states the applicant's willingness to purchase fewer allowances than the number stated in its application. In all other cases, the Administrator will place applicants on the waiting list pursuant to paragraph (n) of this section.

(k) *Notification of approval.* After approving an application, the Administrator will notify the applicant of the amount and type of allowances that may be purchased, the date on which the approval was made, the exact price of allowances for purchase from the direct sale, and instructions for making payment.

(l) *Payment.* Applicants shall submit 50% of the total purchase price by six months after the date of approval of their request to purchase. Pursuant to paragraph (m) of this section, the remaining 50% must be paid on or before the allowance transfer deadline. In the event that approval is granted less than six months prior to the allowance transfer deadline, payment shall be made on or before the allowance transfer deadline, pursuant to paragraph (m) of this section. The Administrator will terminate the approval of any request to purchase upon failure to pay the

50% deposit within six months. Upon failure to submit timely payment for the remaining balance, the Administrator will terminate the sale and the deposit will be forfeited. The 50% deposit and the final payment shall be made by certified check or by some method of electronic transfer or other instrument if the Administrator, following public notice, so requires or permits at some future time. The certified check should be made payable to the U.S. EPA.

(m) *Oversubscription payment deadline.* The Administrator will assess the status of the allowance reservations to the Direct Sale Subaccount on December 1 of each year the direct sale is held. In the event that the direct sale is oversubscribed by December 1, the Administrator will require full payment for reserved allowances no later than the oversubscription payment deadline for those applicants whose applications were previously approved and for whom allowances were reserved. Allowances will be transferred immediately upon such payment.

(n) *Oversubscription to the direct sales program.* Applications received after all allowances in the Direct Sale Subaccount are subject to approved applications shall be included on a waiting list and ranked in order of receipt, as indicated by the time and date stamped on the application upon arrival at the destination indicated pursuant to paragraph (h) of this section. In the event that an approved application is terminated pursuant to paragraph (l) of this section, applications on the waiting list will be approved according to the order in which they are ranked, subject to paragraph (i) of this section. Approved applicants will be notified pursuant to paragraph (k) of this section. If applicants without reserved allowances wish to contact those wait-listed applicants for whom allowances have been reserved, in case such applicants choose not to purchase their reserved allowances, the Administrator will make such information available upon request. Full payment for allowances must be collected by the Administrator on or before the allowance transfer deadline.

(o) *Transfer of allowances.* Allowances will be transferred to purchasers' Allowance Tracking System accounts from the Direct Sale Subaccount as soon as full payment is collected.

(p) *Transfer of proceeds.* Not later than 90 days after the conclusion of the direct sale, the Administrator will pay a pro rata share of the total proceeds of the direct sale (including forfeited deposits) to the authorized account representatives of each unit from whose annual allocation allowances are withheld for the purposes of establishing the Direct Sale Subaccount. The Administrator will pay no interest on such payment. Each unit's pro rata share will be calculated pursuant to regulations to be promulgated under subpart B of this part.

(q) *Unsold allowances in the Direct Sale Subaccount.* If allowances remain in the Direct Sale Subaccount after the allowance transfer deadline, the Administrator will transfer those allowances to the Auction Subaccount. All allowances remaining from the spot sale will be sold in the spot auction in the following year. Advance allowances transferred from the direct sale will be sold in an additional advance auction the following year, in which allowances usable for compliance in six years will be sold. This additional auction will be conducted before allowances offered by authorized account representatives are auctioned.

[56 FR 65601, Dec. 17, 1991, as amended at 58 FR 3695, Jan. 11, 1993; 58 FR 15650, Mar. 23, 1993]

§ 73.73 Delegation of auctions and sales and termination of auctions and sales.

(a) *Delegation.* The Administrator may, in the Administrator's discretion, by delegation or contract provide for the conduct of sales or auctions under the Administrator's supervision by other departments or agencies of the United States Government or by nongovernmental agencies, groups, or organizations.

(b) *Termination of sales.* If the Administrator determines that, during any period of 2 consecutive calendar years, fewer than 20 percent of the allowances available in the subaccount for direct sales have been purchased, the Administrator shall terminate the Direct Sale Subaccount and transfer such allowances to the Auction Subaccount.

(c) *Termination of auctions.* The Administrator may, in the Administrator's discretion, terminate the withholding of allowances and the auctions if the Administrator determines, that, during any period of 3 consecutive years after 2002, fewer than 20 percent of the allowances available in the Auction Subaccount have been purchased.

§ 73.74 Independent power producers written guarantee.

(a) *Nature of guarantee.* The written guarantee is a right to purchase allowances from the Direct Sale Subaccount for $1,500 (CPI adjusted) prior to the time in each calendar year that such allowances are offered for sale to others.

(b) *Issuance of a guarantee.* IPP written guarantees will be issued for a unit

and not to the unit's owners and may only be transferred with the unit itself. Each guarantee application pertains to one specific unit.

(c) *Yearly total number guaranteed.* The number of allowances which may be subject to such written guarantees each year will be equal to the total number of allowances in the Direct Sales Subaccount for that year (50,000).

(d) *Duration of the guarantee.* Applicants may request a guarantee for the useful life of the unit, up to 30 years, beginning in the year 2000.

(e) *Termination of the guarantee.* The Administrator will terminate a written guarantee if the unit for which a guarantee is issued has not commenced commercial operation by January 1, 2000 or within two years of the planned start-up date of the unit, whichever is later, or if the holder of the guarantee fails to make a continuing good faith effort to obtain allowances, including participation in the annual auctions, as required under section 416(c)(4) of the Act. The Administrator will also terminate a guarantee if the holder of the guarantee fails to notify the Administrator of the continued need for the guarantee pursuant to §73.76(e).

EFFECTIVE DATE NOTE: At 61 FR 28763, June 6, 1996, §73.74 was removed, effective Aug. 5, 1996.

§73.75 Application for an IPP written guarantee.

(a) *Application requirements.* Applicants shall demonstrate the following by filling out the Application for an IPP Written Guarantee for SO_2 Allowances:

(1) Certification of Qualifications. Each applicant shall certify that it is the owner or operator of a new independent power production facility and that it meets the criteria set forth in the definition of new independent power production facility, and, where applicable, submit a certified statement from a senior manager (who shall meet the requirements of ''certifying official'' set forth in §73.3) of its affiliate that it cannot supply all or any of the required allowances.

(2) Proof of ''propose to construct'' a new unit. Each applicant shall demonstrate any *one* of the following:

(i) That it has been selected as a winning bidder in a utility competitive bid solicitation;

(ii) That it has entered into a legally binding power sales agreement or such agreement has been entered into on its behalf;

(iii) That it has entered into a legally binding fuel supply agreement or such agreement has been entered into on its behalf;

(iv) That it has received a site lease or proof of land acquisition;

(v) That it has entered into a legally binding steam sales agreement or such agreement has been entered into on its behalf; or

(vi) That it has submitted a complete environmental permit application or has received such a permit.

Each applicant shall submit the relevant document in support of the demonstration. If the document is longer than 10 pages, only the signature page(s) and the first 10 pages of the document shall be submitted.

(3) Pledge to apply for financing. The applicant shall certify that it will apply for, or has applied for, financing for the unit after January 1, 1990 and before the date of the 1993 auction.

(4) Submission of written offers at $750. The applicant shall certify that it has made offers to purchase some or all of the required allowances at $750 each from all phase I utilities, but that it received no unconditional acceptances within 180 days from the date on which each offer was made.

(5) Other information required. The applicant shall submit the following information for the unit:

(i) The proposed location (complete address);

(ii) The proposed production capacity and fuel source;

(iii) Sulfur dioxide emissions limitations under which the unit will be required to operate;

(iv) Projected annual emissions of sulfur dioxide;

(v) Annual allowances requested;

(vi) The proposed date on which the unit will commence commercial operation; and

(vii) The unit's expected operating lifetime.

(b) *Application submitted after the 1993 auction.* An application may be submitted after the date of the 1993 auctions provided that it meets all the requirements of paragraph (a) of this section and includes Supplement A of the Application For An IPP Written Guarantee For SO_2 Allowances which requests the name of the financial entity(ies) to whom application for financing was made.

(c) *Submittal location.* Completed applications shall be submitted to: U.S. Environmental Protection Agency, Acid Rain Division (ANR–445), 401 M Street, SW., Washington, DC 20460, attn.: IPP Written Guarantee.

(d) *Certification.* Certification of all requirements shall be made by a certifying official upon his/her verification of all information and documentation submitted. Changes by an applicant in the name of the certifying official must be made in writing to the Administrator.

(e) *Recordkeeping requirements.* Applicants shall maintain and make available to the Administrator, at the Administrator's request, copies of the $750 written offers to Phase I utilities, any responses to such offers, and copies of documents showing the project milestones set forth in paragraph (a)(2) of this section that have been attained. Holders of written guarantees shall retain copies of their bids in the annual auctions and any written offers made to other allowance holders and shall make such documents available to the Administrator at the Administrator's request.

EFFECTIVE DATE NOTE: At 61 FR 28763, June 6, 1996, § 73.75 was removed, effective Aug. 5, 1996.

§ 73.76 Approval and exercise of the IPP written guarantee.

(a) *First come, first served.* The Administrator will process and approve or disapprove, in whole or in part, applications received on or after the effective date of the regulations. The Administrator will issue guarantees pursuant to approved applications according to the order in which applications are received, as indicated by the date and time stamped on the applications upon arrival at the destination indicated in § 73.75(c).

(b) *Oversubscription to the IPP written guarantee program.* Applications received after all allowances in the Direct Sale Subaccount have become subject to written guarantees or when there is an insufficient number of allowances available to satisfy the amount requested for any year covered by the guarantee will be included on a waiting list and ranked in order of time and date of receipt. In the event that an IPP guarantee is terminated pursuant to § 73.74(e), the Administrator will process applications on the waiting list by rank order and will issue guarantees pursuant to any approved application.

(c) *Deficient applications.* The Administrator may, in his or her discretion, return applications that fail to meet the requirements set forth in §§ 73.75 (a) and (b) if applicable. Revised applications will be processed according to the date and time of receipt of such revised applications.

(d) *Notification of approval.* The Administrator will issue a written guarantee pursuant to each approved application within 30 calendar days of receipt, provided that there is a sufficient number of allowances available to satisfy the guarantee for each year covered by the guarantee at the time the application is processed.

(e) *Certification of continued need for the guarantee.* (1) By no later than June 30 and December 31 of 1992 and no later than December 31 of each year thereafter, the certifying official for a unit for which a guarantee has been issued shall certify, through written notification, to the Administrator that the unit continues to require allowances subject to the guarantee pursuant to § 73.75.

(2) As soon as a unit for which a guarantee has been issued is no longer in need of any or all of the allowances subject to the guarantee, the certifying official shall notify the Administrator, in writing, of the number of allowances that are no longer needed. Pursuant to the terms of the notification, the Administrator will reduce the number of allowances subject to the guarantee or terminate the guarantee.

(f) *Exercise of guarantee.* Allowances may be purchased in each year for those years for which the guarantee

has been issued provided that they are purchased for the unit for which the guarantee has been issued. In any year, the certifying official of a unit for which a guarantee is issued may purchase any number of allowances up to the maximum number specified in the guarantee for such year. Allowances purchased through guarantees will be fully transferable.

(1) Notification and response. To exercise a written guarantee, the certifying official shall notify the Administrator of the number of allowances to be purchased. Such notification shall be in writing and signed by the certifying official pursuant to §73.75(d). The Administrator, following public notice, may require or permit a method or methods of electronic transfer of this information. The Administrator will respond to the written notification within 5 business days after receipt by sending the certifying official a statement of the exact price for the allowances and where to send payment. If the certifying official does not have an account in the Allowance Tracking System, the New Account/New Authorized Account Representative Form shall be completed and mailed with payment.

(2) Payment. Certifying officials shall purchase allowances by certified check for the total amount or by some method of electronic transfer or other instrument, if the Administrator, following public notice, so requires or permits at some future time. The certified check shall be made payable to U.S. EPA.

(3) Time period to exercise. Notification to exercise a guarantee shall be received by the Administrator no later than April 15th of the calendar year in which allowances are to be purchased. Payment for allowances shall be collected by the Administrator no later than May 15th of that same year. If the direct sales program has been terminated pursuant to §73.73(b), notification and payment may occur at any time prior to the allowance transfer deadline for each year in which allowances are to be purchased.

(g) *Transfer of allowances.* Allowances will be transferred into the unit's allowance system account as soon as full payment is collected.

(h) *Transfer of proceeds.* The Administrator will pay all proceeds from the exercise of written guarantees pursuant to §73.72(p).

EFFECTIVE DATE NOTE: At 61 FR 28763, June 6, 1996, §73.76 was removed, effective Aug. 5, 1996.

§73.77 Relationship of the independent power producers written guarantee to the direct sale subaccount.

(a) *Reserving allowances in the Direct Sale Subaccount.* The Administrator will make available up to 50,000 yearly allowances in the direct sales subaccount for written guarantees. The Administrator will first reserve for IPP guarantees the 25,000 yearly allowances in the advance sale category. If more than 25,000 yearly allowances are subject to guarantees, the excess allowances needed will be reserved from the spot allowance category, up to 25,000 each year.

(b) *Adjustment of the direct sale schedule.* If fewer than 25,000 advance allowances are subject to written guarantees for any year from 2000 through 2006, any remaining advance allowances will be sold in the advance sale seven years preceding that year. If all 25,000 advance allowances are reserved for written guarantees for 2000 through 2006, the direct sale will begin in the year 2000 and will consist only of spot sales of allowances not sold pursuant to written guarantees.

(c) *Continuation of the guarantee.* Termination of the direct sale will not affect IPP written guarantees which will continue in effect for the operating life of the unit or 30 years, whichever is shorter, unless terminated pursuant to §73.74(e).

(d) *Guaranteed allowances not sold.* If a certifying official of a unit for which a guarantee is issued chooses not to exercise the guarantee for a year in which allowances are reserved, the allowances will be offered for sale in the direct sale beginning on June 1 of that year. In the event the direct sale is terminated, any unsold allowances will be transferred to the Auction Subaccount pursuant to §73.72(q).

EFFECTIVE DATE NOTE: At 61 FR 28763, June 6, 1996, §73.77 was removed, effective Aug. 5, 1996.

Subpart F—Energy Conservation and Renewable Energy Reserve

SOURCE: 58 FR 3695, Jan. 11, 1993, unless otherwise noted.

§ 73.80 Operation of allowance reserve program for conservation and renewable energy.

(a) *General.* The Administrator will allocate allowances from the Conservation and Renewable Energy Reserve (the ''Reserve'') established under subpart B based on verified kilowatt hours saved through the use of one or more qualified energy conservation measures or based on kilowatt hours generated by qualified renewable energy generation. Allowances will be allocated to applicants that meet the requirements of this subpart according to the formulas specified in § 73.82(d), and in the order in which applications are received, except where provided for in § 73.84 and § 73.85, until a total of 300,000 allowances have been allocated.

(b) *Period of applicability.* Allowances will be allocated under this subpart for qualified energy conservation measures or renewable energy generation sources that are operational on or after January 1, 1992, and before the date on which any unit owned or operated by the applicant becomes a Phase I unit or a Phase II unit.

(c) *Termination of the Reserve.* The Administrator will reallocate any allowances remaining in the Reserve after January 2, 2010 to the affected units from whom allowances were withheld by the Administrator, in accordance with section 404(g), for purposes of establishing the Reserve. Each unit's allocation under this paragraph will be calculated as follows:

$$\frac{\text{Remaining allowances in the Reserve} \times \text{Unit's allowances withheld}}{\text{Total amount in Reserve}}$$

(Allowances will be rounded to the nearest allowance)

[58 FR 3695, Jan. 11, 1993; 58 FR 40747, July 30, 1993]

§ 73.81 Qualified conservation measures and renewable energy generation.

(a) *Qualified energy conservation measures.* A qualified energy conservation measure is a demand-side measure not operational until the period of applicability, implemented in the residence or facility of a customer to whom the utility sells electricity, that:

(1) Is specified in appendix A(1) of this subpart; or

(2) In the case of a device or material that is not included in appendix A(1) of this subpart,

(i) Is a cost-effective demand-side measure consistent with an applicable least-cost plan or least-cost planning process that increases the efficiency of the customer's use of electricity (as measured in accordance with § 73.82(c)) without increasing the use by the customer of any fuel other than qualified renewable energy, industrial waste heat, or, pursuant to paragraph (b)(5) of this section, industrial waste gases;

(ii) Is implemented pursuant to a conservation program approved by the utility regulatory authority, which certifies that it meets the requirements of paragraph (a)(2)(i) of this section and is not excluded by paragraph (b) of this section; and

(iii) Is reported by the applicant in its application to the Reserve.

(b) *Non-qualified energy conservation measures.* The following energy conservation measures shall not qualify for Allowance Reserve allocations:

(1) Demand-side measures that were operational before January 1, 1992;

(2) Supply-side measures;

(3) Conservation programs that are exclusively informational or educational in nature;

(4) Load management measures that lead to economic reduction of electric energy demand during a utility's peak generating periods, unless kilowatt hour savings can be verified by the utility pursuant to § 73.82(c); or

(5) Utilization of industrial waste gases, unless the applicant has certified that there is no net increase in sulfur dioxide emissions from such utilization.

(c) *Qualified renewable energy generation.* Qualified renewable energy generation is electrical energy generation, not operational until the period of applicability, that:

(1) Is specified in appendix A(3) of this subpart; or

(2) In the case of renewable energy generation that is not included in appendix A(3) of this subpart is#:

(i) Consistent with a least cost plan or a least cost planning process and derived from biomass (*i.e.*, combustible energy-producing materials from biological sources which include wood, plant residues, biological wastes, landfill gas, energy crops, and eligible components of municipal solid waste), solar, geothermal, or wind resources;

(ii) Implemented pursuant to approval by the utility regulatory authority, which certifies that it meets the requirements of paragraphs (c)(2)(i) and (c)(2)(ii) of this section and is not excluded by paragraph (d) of this section; and

(iii) Is reported by the applicant in its application to the Reserve.

(d) *Non-qualified renewable energy generation.* The following renewable energy generation shall not qualify for Allowance Reserve allocations:

(1) Renewable energy generation that was operational before January 1, 1992;

(2) Measures that reduce electricity demand for a utility's customers without providing electric generation directly for sale to customers; and

(3) Measures that appear on the list of qualified energy conservation measures in Appendix A(1) of this subpart.

[58 FR 3695, Jan. 11, 1993; 58 FR 40747, July 30, 1993]

§ 73.82 Application for allowances from reserve program.

(a) *Application Requirements.* Each application for Conservation and Renewable Energy Reserve allowances, shall:

(1) Certify that the applicant is a utility;

(2) Demonstrate that the applicant, any subsidiary of the applicant, or any subsidiary of the applicant's holding company, is an owner or operator, in whole or in part, of at least one Phase I or Phase II unit by including in the application the name and Allowance Tracking System account number of a Phase I or Phase II unit which it owns or operates and for which it is listed as an owner or operator on the certificate of representation submitted by the designated representative for the unit pursuant to § 72.20 of this chapter;

(3) Through certification, demonstrate that the applicant is paying in whole or in part for one or more qualified energy conservation measures or qualified renewable energy generation (that became operational during the period of applicability) either directly or through payment to another person that purchases the qualified energy conservation measure or qualified renewable energy generation;

(4) Demonstrate that the applicant is subject to a least cost plan or a least cost planning process that:

(i) provides an opportunity for public notice and comment or other public participation processes;

(ii) evaluates the full range of existing and incremental resources in order to meet expected future demand at lowest system cost;

(iii) treats demand-side resources and supply-side resources on a consistent and integrated basis;

(iv) takes into account necessary features for system operation such as diversity, reliability, dispatchability, and other factors of risk;

(v) may take into account other factors, including the social and environmental costs and benefits of resource investments; and

(vi) is being implemented by the applicant to the maximum extent practicable.

(5) Demonstrate that the qualified energy conservation measure adopted or qualified renewable energy generated, or both, are consistent with the least cost plan or least cost planning process;

(6) If the applicant is subject to the rate-making jurisdiction of a State or local utility regulatory authority, its least cost plan or least cost planning process has been approved or accepted by the utility regulatory authority in the State or locality in which the qualified conservation measure(s) are adopted or in which the qualified renewable energy generation is utilized, and such State or local utility regulatory authority certifies that the

least-cost plan or least-cost planning process meets the requirements of paragraph (a)(4) of this section;

(7) If the applicant is not subject to the rate-making jurisdiction of a State or local regulatory authority, its least cost plan or least cost planning process has been approved or has been accepted by the utility regulatory authority with rate-making jurisdiction over the applicant, and such utility regulatory authority certifies that the least cost plan or least cost planning process meets the requirements of paragraph (a)(4) of this section;

(8) If the applicant is an independent power production facility that sells qualified renewable energy generation to another utility, the applicant has enclosed documentation that such qualified renewable energy generation was purchased pursuant to the purchasing utility's least cost plan or least cost planning process, which has been approved or accepted by the purchasing utility's utility regulatory authority.

(9)(i) If the applicant is an investor-owner utility subject to the rate-making jurisdiction of a State utility regulatory authority and is submitting an application on the basis of one or more qualified energy conservation measures, such State utility regulatory authority has established a procedure for determining rates and charges ensuring net income neutrality, as defined in § 72.2 of this chapter, including a provision that the utility's net income is compensated in full (considering factors such as risk) for lost sales attributable to the utility's conservation programs, which may include:

(A) General ratemaking for formulas that decouple utility profits from actual utility sales;

(B) Specific rate adjustment formulas that allow a utility to recover in its retail rates the full costs of conservation measures plus any associated net revenues lost as a result of reduced sales resulting from conservation initiatives; or

(C) Conservation incentive mechanisms designed to provide positive financial rewards to a utility to encourage implementation of cost-effective measures;

(ii) Provided that the existence of any one of the categories of rate-making or rate adjustment formulas or conservation incentive mechanisms specified in paragraph (a)(9)(i) of this section shall not necessarily constitute fulfillment of the net income neutrality requirement unless, pursuant to § 73.83, the Secretary of Energy has certified the establishment of such net income neutrality;

(10) Demonstrate that the applicant has implemented the qualified energy conservation measures or used the qualified renewable energy generation specified in the application during the period of applicability;

(11) Demonstrate the extent to which installation of the qualified conservation measure(s) has achieved actual energy savings, by stating, on the basis of the performance of the measure(s) following installation:

(i) The amount of kilowatt hour savings resulting from the measure(s) in the given year(s);

(ii) Pursuant to paragraph (c) of this section, the methodology used to calculate the kilowatt hour savings; and

(iii) The name, address, and phone number of the person who performed the calculation of kilowatt hour savings;

(12) Report the type and amount of yearly qualified renewable energy generation, by stating (and submitting documentation, including copies of plant operation records, supporting such statements) the kilowatt hours of qualified renewable energy generated during a previous calendar year or years; and

(13) Report the extent to which qualified renewable energy generation was produced in combination with other energy sources (hereafter ''hybrid generation'') by stating (and submitting documentation, including copies of plant operation records, supporting such statements) the heat input and heat rate of the non-qualified renewable generation, the total annual kilowatt hours generated, and the kilowatt hours that can be attributed to qualified renewable energy generation;

(14) Demonstrate the extent to which the implementation of qualified energy conservation measures or the use of qualified renewable energy generation

has resulted in avoided tons of sulfur dioxide emissions by the utility during the period of applicability, pursuant to paragraph (d) of this section.

(b) *Application to the Secretary of Energy*. For purposes of paragraph (a)(9) of this section, the applicant shall fulfill the following requirements:

(1) If a utility applying for allowances from the Reserve has not received certification of net income neutrality from the Secretary of Energy or such certification is no longer applicable, the applicant shall submit to the Secretary of Energy:

(i) A copy of the relevant State utility regulatory authority's final order or decision setting forth the approved ratemaking mechanisms that ensure that a utility's net income will be at least as high upon implementation of energy conservation measures as such net income would have been if the energy conservation measures has not been implemented;

(ii) A description of how the State utility regulatory authority's order or decision meets the definition of net income neutrality as defined in § 72.2; and

(iii) Any additional information necessary for Secretary of Energy to certify that the State regulatory authority has established rates and charges that ensure net income neutrality.

(2) If a utility applying for allowances from the Reserve has already received certification of net income neutrality from the Secretary of Energy in connection with a previous application for allowances, and the ratemaking methods or procedures that ensure net income neutrality have not been altered, the applicant shall certify that the ratemaking methods and procedures that led to the original certification are still in place.

(c) *Verification of energy savings methodology*. For the purposes of paragraph (a)(11) of this section:

(1) Applicants subject to the ratemaking jurisdiction of a State utility regulatory authority shall use the energy conservation verification methodology approved by such authority in support of energy conservation applications under this subpart and part 72 of this chapter, provided that

(i) The authority in question uses this methodology to determine the applicant's entitlement to performance-based rate adjustments, which permit a utility's rates to be adjusted for additional kilowatt hours saved due to the utility's energy conservation programs;

(ii) Such performance based rate adjustments are subject to modification either prospectively or retrospectively to reflect periodic evaluations of energy savings secured by the applicant; and

(iii) The applicant has provided the Administrator with a description of the State utility regulatory authority's verification methodology and documentation that the requirements of this paragraph (e) have been met.

(2) All other applicants, including applicants whose rates are not subject to the ratemaking jurisdiction of a State utility regulatory authority shall demonstrate to the satisfaction of the Administrator through submission of documentation that savings have been achieved and may use the EPA Conservation Verification Protocol.

(3) All records of verification of energy savings shall be kept on file by the applicant for a period of 3 years. The Administrator may extend this period for cause at any time prior to the end of 3 years by notifying the applicant in writing.

(4) The Administrator reserves the right to conduct independent reviews, analyses, or audits to ascertain that the verification is valid and correct. If the Administrator determines that the verification is not valid or correct, the Administrator may revise the allocation of allowances to an applicant or require the surrender of allowances from the applicant's Allowance Tracking System account.

(d) *Calculation of allowances to be allocated*.

(1) In the case of an application submitted on the basis of qualified energy conservation measures, the sulfur dioxide emissions tonnage deemed avoided for any calendar year shall be equal to the product of:

$$\frac{(A)\times(B)}{2000\ \text{lbs./ton}}$$

(Rounded to the nearest ton)

Where:

(A)=the kilowatt hours that were not, but would otherwise have been, supplied by the utility during such year in the absence of such qualified energy conservation measures.

(B)=0.004 1bs. of sulfur dioxide per kilowatt hour.

(2) In the case of an application submitted on the basis of qualified renewable energy generation, the sulfur dioxide emissions tonnage deemed avoided for any calendar year shall be equal to the product of:

$$\frac{(A)\times(B)}{2000 \text{ lbs./ton}}$$

(Rounded to the nearest ton)

Where:

(A)=the actual kilowatt hours of qualified renewable energy generated or purchased by the applicant (based on the qualified renewable energy generation portion for hybrid generation).

(B)=0.004 lbs. of sulfur dioxide per kilowatt hour.

(e) *Certification by Applicant's Certifying Official.*

(1) Certification of all application requirements, including the net income neutrality requirements, shall be made by a certifying official of the applicant upon such official's verification of all information and documentation submitted.

(2) The applicant shall submit a certification statement signed by the applicant's certifying official that reads ''I certify under penalty of law that I have personally examined and am familiar with the information submitted in this document and all its attachments. Based on my inquiry of those individuals with primary responsibility for obtaining the information, I certify that the information is to the best of my knowledge and belief true, accurate, and complete. I am aware that there are significant penalties for submitting false material information, or omitting material information, including the possibility of fine or imprisonment for violations.''

(f) *Certification by State Utility Regulatory Authority.* Applicants subject to the ratemaking jurisdiction of a State utility regulatory authority shall include in their applications a certification by the State utility regulatory authority's certifying official that it has reviewed the application, including supporting documentation, and finds it to be accurate, complete, and consistent with all applicable requirements of this subpart.

(g) *Time period to apply.* (1) Beginning no earlier than July 1, 1993, and no earlier than July 1 of each subsequent year, applicants may apply to the Administrator for allowances from the Reserve for emissions avoided in a previous year or years by use of qualified energy conservation measures or qualified renewable energy generation that became operational during the period of applicability; and

(2) Beginning no earlier than January 1, 1993, any applicant may apply to the Secretary of Energy for the Secretary's certification of net income neutrality where the application is based on the use of one or more qualified energy conservation measures.

(3) Applications will be received by the Administrator and the Secretary of Energy until January 2, 2010, pursuant to § 73.80(c), or until no allowances remain in the Reserve.

(h) *Submittal location.* Applicants shall submit one copy of the completed Reserve application, not including the net income neutrality application, via registered mail to the Administrator at an address to be specified in later guidance. Applicants shall submit 10 copies of the net income neutrality application via registered mail to the Department of Energy at the following address: Department of Energy, Office of Conservation and Renewable Energy, Mail Stop CE–10, Room 6c–036, 1000 Independence Avenue, SW., Washington, DC 20585, Attn: Net Income Neutrality Certification.

[58 FR 3695, Jan. 11, 1993; 58 FR 40747, July 30, 1993]

§ 73.83 Secretary of Energy's action on net income neutrality applications.

(a) *First come, first served.* The Secretary of Energy will process and certify net income neutrality applications on a ''first-come, first served'' basis, according to the order, by date and time, in which they are received from either the applicant or, in the case of

an application submitted to the Administrator and then forwarded to the Secretary, from the Administrator.

(b) *Deficient applications.* If the Secretary of Energy determines that the net income neutrality certification application does not meet the requirements of §73.82 (a)(9) and (b), the Secretary will notify the applicant and the Administrator in writing of the deficiency. The applicant may then supply additional information or a new revised application as necessary for the Secretary to make a determination that the applicant meets the requirements of §73.28(a)(9) and (b). Additional information or revised applications will be processed according to the date of receipt of such information or revisions.

(c) *Notification of approval.* The Secretary of Energy will review the net income neutrality application to determine whether it meets the requirements of §73.82 (a)(9) and (b) and will certify this finding in writing to the applicant and to the Administrator within 60 calendar days of receipt of the net income neutrality application or a revised application, except that the Secretary may specify a later date for certification.

§73.84 Administrator's action on applications.

(a) *First come, first served.* The Administrator will process and approve Allowance Reserve applications, in whole or in part, on a ''first-come, first-served'' basis as established by the order of date of receipt, provided that the Administrator shall not allocate more than a total of 30,000 allowances in connection with applications based on any one of the four categories of qualified renewable energy generation enumerated in §73.81(c)(2)(i) and Appendix A(3.1–3.4).

(b) *Deficient applications.* An application is deficient and will be returned by the Administrator if it fails to meet the requirements set forth in this subpart, including those set forth in §73.82. A revised application that is submitted after being returned for failure to meet the requirements of this subpart will be processed according to the date of receipt of the revised application.

(c) *Notification of approval.* Applications that the Administrator determines to be complete and correct will be conditionally approved, subject to notification to EPA of a net income neutrality certification from the Department of Energy, within 120 calendar days of receipt. Allowances from the Reserve will be awarded subject to the Department of Energy certification, or, if a DOE certification has already been issued to the applicant, allocated to applicants from such applications depending on the availability of allowances in the Reserve. In the event the initial application approval is conditioned upon the Secretary of Energy's certification, final approval will be granted upon notification of certification by the Secretary of Energy pursuant to §73.83. The Administrator will notify applicants of final approval in writing.

(d) *Allocation of allowances.* Beginning in 1995, the Administrator will allocate allowances from the Reserve for each approved application into the applicant's account or accounts in the Allowance Tracking System. If the applicant does not have an account in the Allowance Tracking System, or wishes to open a new account for the allowances from the Reserve, an application pursuant to §73.31(c) must accompany the application for Reserve allowances.

(e) *Partial fulfillment of requests.* (1) In the event that the allowances available in the Reserve are less than the number that could otherwise be allocated to an approved applicant's account under the application as approved, the applicant will receive the allowances remaining in the Reserve.

(2) In the event that a subaccount is established by EPA, pursuant to §73.85, and the applicant is making a request for allowances not included in the subaccount, the Allowance Reserve allocations for the approved applicant will be made, in addition to any that may be allocated pursuant to paragraph (f)(3) of this section, from any allowances remaining in the Reserve that are not contained in the subaccount.

(f) *Oversubscription of the Reserve.*

(1) In the event that the Reserve becomes oversubscribed by more than one applicant on a single day, the allowances remaining in the Reserve will be

distributed on a pro rata basis to applicants meeting the requirements of § 73.82.

(2) If Reserve applications are received by the Administrator after all allowances from the Reserve have been allocated, the Administrator will so notify the applicant within 5 business days after receipt of the application.

(3) In the event that applications meeting the requirements pursuant to § 73.82 are received by the Administrator prior to February 1, 1998, and

(i) All remaining allowances in the Reserve have been placed in a subaccount pursuant to § 73.85; and

(ii) The applicant is not eligible for an allocation of allowances from the subaccount; the application will be placed on a waiting list in order of receipt.

(iii) The Administrator will notify the applicant of such action within 5 business days after receipt of the application.

(4) If any allowances are returned to the Reserve after February 1, 1998 pursuant to § 73.85(c), the Administrator will review the wait-listed applications in order of receipt and allocate any remaining allowances to the approved applicants in the order of their receipt until no more allowances remain in the Reserve.

(g) *Applications for allowances based on the same avoided emissions from the same energy conservation measures or renewable energy generation.*

(1) The Administrator will not award allowances to more than one applicant for the same avoided emissions from the same energy conservation measure or the same qualified renewable energy generation, and will process and act on such duplicative applications on a ''first-come, first-serve'' basis as determined by the order of date of receipt.

(2) Any allowances awarded pursuant to two or more applications received on the same date based on the same avoided emissions from the same energy conservation measure or the same renewable electric generation will be divided equally between all such applicants unless the Administrator is otherwise directed by all such applicants.

§ 73.85 Administrator review of the reserve program.

(a) *Administrator review of the Reserve and creation of a subaccount.* In the event that an allocation of allowances from the Reserve pursuant to a pending application would bring the total number of allowances allocated to a number greater than 240,000, the Administrator will review the distribution of all allowances allocated as follows:

(1) If at least 60,000 allowances have been allocated from the Reserve for *each* of

(i) Qualified energy conservation measures, and

(ii) Qualified renewable energy generation, allocations of allowances will continue pursuant to § 73.82, until no more allowances remain in the Reserve.

(2) If fewer than 60,000 allowances have been allocated for either qualified energy conservation measures or qualified renewable energy generation, the Administrator will establish a subaccount for the allocation of allowances for applications based on the category for which fewer than 60,000 allowances have been allocated. The subaccount will contain allowances equal to 60,000 less the number of allowances previously allocated for such category.

(b) *Allocation of allowances from the subaccount.* The Administrator will allocate allowances from the subaccount established pursuant to paragraph (a) of this section to approved and DOE certified applicants that fulfill the requirements of this subpart, including § 73.82 and § 73.83, on a ''first-come, first-served basis'', pursuant to § 73.84(a), until the subaccount is depleted or closed pursuant to paragraph (c) of this section.

(c) *Closure of the subaccount.* Unless all allowances in the subaccount have been previously allocated, the Administrator will terminate the subaccount not later than February 1, 1998 and return any allowances remaining in the subaccount to the general account of the Reserve. After all Reserve allocations have been made to applicants with approved and DOE certified applications subject to § 73.84(f)(3), the Administrator will allocate any remaining allowances to any applicants that meet the requirements of this subpart,

including §73.82 and §73.83, on a ''first-come, first-served'' basis, pursuant to §73.84.

§73.86 State regulatory autonomy.

Nothing in this Subpart shall preclude a state or state regulatory authority from providing additional incentives to utilities to encourage investment in any conservation measures or renewable energy generation.

APPENDIX A TO SUBPART F—LIST OF QUALIFIED ENERGY CONSERVATION MEASURES, QUALIFIED RENEWABLE GENERATION, AND MEASURES APPLICABLE FOR REDUCED UTILIZATION

1. Demand-side Measures Applicable for the Conservation and Renewable Energy Reserve Program or Reduced Utilization

The following listed measures are approved as ''qualified energy conservation measures'' for purposes of the Conservation and Renewable Energy Reserve Program or reduced utilization qualified energy conservation plans under §72.43 of this chapter. Measures not appearing on the list may also be qualified conservation measures if they meet the requirements specified in §73.81(a) of this part.

1.1 Residential

1.1.1 Space Conditioning

- Electric furnace improvements (intermittent ignition, automatic vent dampers, and heating element change-outs)
- Air conditioner (central and room) upgrades/replacements
- Heat pump (ground source, solar assisted, and conventional) upgrades/replacements
- Cycling of air conditioners and heat pumps
- Natural ventilation
- Heat recovery ventilation
- Clock thermostats
- Setback thermostats
- Geothermal steam direct use
- Improved equipment controls
- Solar assisted space conditioning (ventilation, air-conditioning, and desiccant cooling)
- Passive solar designs
- Air conditioner and heat pump clean and tune-up
- Heat pipes
- Whole house fans
- High efficiency fans and motors
- Hydronic pump insulation
- Register relocation
- Register size and blade configuration
- Return air location
- Duct sizing
- Duct insulation
- Duct sealing
- Duct cleaning
- Shade tree planting

1.1.2 Water Heating

- Electric water heater upgrades/replacements
- Electric water heater tank wraps/blankets
- Low-flow showerheads and fittings
- Solar heating and pre-heat units
- Geothermal heating and pre-heat units
- Heat traps
- Water heater heat pumps
- Recirculation pumps
- Setback thermostats
- Water heater cycling control
- Solar heating for swimming pools
- Pipe wrap insulation

1.1.3 Lighting

- Lamp replacement
- Dimmers
- Motion detectors and occupancy sensors
- Photovoltaic lighting
- Fixture replacement
- Outdoor lighting controls

1.1.4 Building Envelope

- Attic, basement, ceiling, and wall insulation
- Passive solar building systems
- Exterior roof insulation
- Exterior wall insulation
- Exterior wall insulation bordering unheated space (e.g., a garage)
- Knee wall insulation in attic
- Floor insulation
- Perimeter insulation
- Storm windows/doors
- Caulking/weatherstripping
- Multi-glazed inserts for sliding glass doors
- Sliding door replacements
- Installation of French doors
- Hollow core door replacement
- Radiant barriers
- Window vent conversions
- Window replacement
- Window shade screens
- Low-e windows
- Window reduction
- Attic ventilation
- Whole house fan
- Passive solar design

1.1.5 Other Appliances

- Refrigerator replacements
- Freezer replacements
- Oven/range replacements
- Dishwasher replacements
- Clothes washer replacements
- Clothes dryer replacements
- Customer located power generation based on photovoltaic, solar thermal, biomass, wind or geothermal resources
- Swimming pool pump replacements
- Gasket replacements
- Maintenance/coil cleaning

1.2 Commercial

1.2.1 Heating/Ventilation/Air Conditioning (HVAC)

- Heat pump replacement

- Fan motor efficiency
- Resizing of chillers
- Heat pipe retrofits in air conditioning units
- Dehumidifiers
- Steam trap insulation
- Radiator thermostatic valves
- Variable speed drive on fan motor
- Solar assisted HVAC including ventilation, chillers, heat pumps, and desiccants
- HVAC piping insulation
- HVAC ductwork insulation
- Boiler insulation
- Automatic night setback
- Automatic economizer cooling
- Outside air control
- Hot and cold deck automatic reset
- Reheat system primary air optimization
- Process heat recovery
- Deadband thermostat
- Timeclocks on circulating pumps
- Chiller system
- Increase condensing unit efficiency
- Separate make-up air for exhaust hoods
- Variable air volume system
- Direct tower cooling (chiller strainer cycle)
- Multiple chiller control
- Radiant heating
- Evaporative roof surface cooling
- Cooling tower flow control
- Ceiling fans
- Evaporative cooling
- Direct expansion cooling system
- Heat recovery ventilation (water and air-source)
- Set-back controls for heating/cooling
- Make-up air control
- Manual fan switches
- Energy saving exhaust hood
- Night flushing
- Spot radiant heating
- Terminal regulated air volume control scheme
- Variable speed motors for HVAC system
- Waterside economizers
- Airside economizer
- Gray water systems
- Well water for cooling

1.2.2 Building envelope

- Insulation
- Wall insulation
- Floor/slab insulation
- Roof insulation
- Window and door upgrades, replacements, and films (to reduce solar heat gains)
- Passive solar design
- Earth berming
- Shading devices and tree planting
- High reflectivity roof coating
- Evaporative cooling
- Infiltration reduction
- Weatherstripping
- Caulking
- Low-e windows
- Multi-glazed windows
- Replace glazing with insulated walls
- Thermal break window frames
- Tinted glazing
- Vapor barrier
- Vestibule entry

1.2.3 Lighting

- Electronic ballast replacements
- Delamping
- Reflectors
- Occupancy sensors
- Daylighting with controls
- Photovoltaic lighting
- Efficient exterior lighting
- Manual selective switching
- Efficient exit signs
- Daylighting construction
- Cathode cutout ballasts
- High intensity discharge luminaries
- Outdoor light timeclock and photocell

1.2.4 Refrigeration

- Refrigerator replacement
- Freezer replacement
- Optimize heat gains to refrigerated space
- Optimize defrost control
- Refrigeration pressure optimization control
- High efficiency compressors
- Anti-condensate heater control
- Floating head pressure
- Hot gas defrost
- Parallel unequal compressors
- Variable speed compressors
- Water cooler controls
- Waste heat utilization
- Air doors on refrigeration equipment

1.2.5 Water Heating

- Electric water heating upgrades/replacements
- Electric water heater wraps/blankets
- Pipe insulation
- Solar heating and/or pre-heat units
- Geothermal heating and/or pre-heat units
- Circulating pump control
- Point-of-use water heater
- Heat recovery domestic water heater (DWH) system
- Chemical dishwashing system
- End-use reduction using low-flow fittings

1.2.6 Other end-uses and miscellaneous

- Energy management control systems for building operations
- Customer located power based on photovoltaic, solar thermal, biomass, wind, and geothermal resources
- Energy efficient office equipment
- Customer-owned transformer upgrades and proper sizing

1.3 Industial

1.3.1 Motors

- Retire inefficient motors and replace with energy efficient motors, including the use of electronic adjustable speed or variable frequency drives
- Rebuild motors to operate more efficiently through greater contamination protection and improved magnetic materials
- Install self-starters

• Replace improperly sized motors
1.3.2 Lighting
• Electronic ballast replacement/improvement
• Electromagnetic ballast upgrade
• Installation of reflectors
• Substitution of lamps with built-in automatic cathode cut-out switches
• Modify ballast circuits with additional impedance devices
• Metal halide and high pressure sodium lamp retrofits
• High pressure sodium retrofits
• Daylighting with controls
• Occupancy sensors
• Delamping
• Photovoltaic lighting
• Two step and dimmable high intensity discharge ballast
1.3.3 Heating/Ventilation/Air Conditioning (HVAC)
• Heat pump replacement/upgrade
• Furnace upgrade/replacement
• Fan motor efficiency
• Resizing of chillers
• Heat pipe retrofits on air conditioners
• Variable speed drive on fan motor
• Solar assisted HVAC including ventilation, chillers, heat pumps and desiccants
1.3.4 Industrial Processes
• Upgrades in heat transfer equipment
• Insulation and burner upgrades for industrial furnaces/ovens/boilers to reduce electricity loads on motors and fans
• Insulation and redesign of piping
• Upgrades/retrofits in condenser/evaporation equipment
• Process air and water filtration for improved efficiency
• Upgrades of catalytic combustors
• Solar process heat
• Customer located power based on photovoltaic, solar thermal, biomass, wind, and geothermal resources
• Power factor controllers
• Utilization of waste gas fuels
• Steam line and steam trap repairs/upgrades
• Compressed air system improvements/repairs
• Industrial process heat pump
• Optimization of equipment lubrication or maintenance
• Resizing of process equipment for optimal energy efficiency
• Use of unique thermodynamic power cycles
1.3.5 Building Envelope
• Insulation of ceiling, walls, and ducts
• Window and door replacement/upgrade, including thermal energy barriers
• Caulking/weatherstripping
1.3.6 Water Heating
• Electric water heater upgrades/replacements
• Electric water heater wraps/blankets
• Pipe insulation
• Low-flow showerheads and fittings
• Solar heating and pre-heat units
• Geothermal heating and pre-heat units
1.3.7 Other End-uses and miscellaneous
• Refrigeration system retrofit/replacement
• Energy management control systems and end use metering
• Customer-owned transformer retrofits/replacements and proper sizing
1.4 Agricultural
1.4.1 Space Conditioning
• Building envelope measures
• Efficient HVAC equipment
• Heat pipe retrofit on air conditioners
• System and control measures
• Solar assisted HVAC including ventilation, chillers, heat pumps, and desiccants
• Air-source and geothermal heat pumps replacement/upgrades
1.4.2 Water heating
• Upgrades/replacements
• Water heater wraps/blankets
• Pipe insulation
• Low-flow showerheads and fittings
• Solart heating and/or pre-hear units
• Geothermal heating and/or pre-heat units
1.4.3 Lighting
• Electronic ballast replacements
• Delamping
• Reflectors
• Occupancy sensors
• Daylighting with controls
• Photovoltaic lighting
• Outdoor lighting controls
1.4.4 Pumping/Irrigation
• Pump upgrades/retrofits
• Computerized pump control systems
• Irrigation load management strategies
• Irrigation pumping plants
• Computer irrigation control
• Surge irrigation
• Computerized scheduling of irrigation
• Drip irrigation systems
1.4.5 Motors
• Retire inefficient motors and replace with energy efficient motors, including the use of electronic adjustable speed and variable frequency drives
• Rebuild motors to operate more efficiently through greater contamination protection and improved magnetic materials
• Install self-starters
• Replace improperly sized motors
11.4.6 Other end uses
• Ventilation fans
• Cooling and refrigeration system upgrades
• Grain drying using unheated air
• Grain drying using low temperature electric
• Customer-owned transformer retrofits/replacements and proper sizing
• Programmable controllers for electrical farm equipment
• Controlled livestock ventilation
• Water heating for production agriculture

• Milk cooler heat exchangers
• Direct expansion/ice bank milk cooling
• Low energy precision application systems
• Heat pump crop drying
1.5 Government Services Sector
1.5.1 Streetlighting
• Replace incandescent and mercury vapor lamps with high pressure sodium and metal halide
1.5.2 Other
• Energy efficiency improvements in motors, pumps, and controls for water supply and waste water treatment
• District heating and cooling measures derived for cogeneration that result in electricity savings

2. Supply-side Measures Applicable for Reduced Utilization

Supply-side measures that may be approved for purposes of reduced utilization plans under § 72.43 include the following:
2.1 Generation efficiency
• Heat rate improvement programs
• Availability improvement programs
• Coal cleaning measures that improve boiler efficiency
• Turbine improvements
• Boiler improvements
• Control improvements, including artificial intelligence and expert systems
• Distributed control—local (real-time) versus central (delayed)
• Equipment monitoring
• Performance monitoring
• Preventive maintenance
• Additional or improved heat recovery
• Sliding/variable pressure operations
• Adjustable speed drives
• Improved personnel training to improve man/machine interface
2.2 Transmission and distribution efficiency
• High efficiency transformer switchouts using amorphous core and silicon steel technologies
• Low-loss windings
• Innovative cable insulation
• Reactive power dispatch optimization
• Power factor control
• Primary feeder reconfiguration
• Primary distribution voltage upgrades
• High efficiency substation transformers
• Controllable series capacitors
• Real-time distribution data acquisition analysis and control systems
• Conservation voltage regulation

3. Renewable Energy Generation Measures Applicable for the Conservation and Renewable Energy Reserve Program

The following listed measures are approved as ''qualified renewable energy generation'' for purposes of the Conservation and Renewable Energy Reserve Program. Measures not appearing on the list may also be qualified renewable energy generation measures if they meet the requirements specified in § 73.81.
3.1 Biomass resources
• Combustible energy-producing materials from biological sources which include: wood, plant residues, biological wastes, landfill gas, energy crops, and eligible components of municipal solid waste.
3.2 Solar resources
• Solar thermal systems and the non-fossil fuel portion of solar thermal hybrid systems
• Grid and non-grid connected photovoltaic systems, including systems added for voltage or capacity augmentation of a distribution grid.
3.4 Geothermal resources
• Hydrothermal or geopressurized resources used for dry steam, flash steam, or binary cycle generation of electricity.
3.5 Wind resources
• Grid-connected and non-grid-connected wind farms
• Individual wind-driven electrical generating turbines

Subpart G—Small Diesel Refineries

§ 73.90 Allowance allocations for small diesel refineries.

(a) *Initial certification of eligibility*. The certifying official of a refinery that seeks allowances under this section shall apply for certification of its facility eligibility prior to or accompanying a request for allowances under paragraph (d) of this section. A completed application for certification, submitted to the address in § 73.13 of this chapter, shall include the following:

(1) Photocopies of Form EIA–810 for each month of calendar year 1990 for the refinery;

(2) Photocopies of Form EIA–810 for each month of calendar year 1990 for each refinery that is owned or controlled by the refiner which owns or controls the refinery seeking certification; and

(3) A letter certified by the certifying official that the submitted photocopies are exact duplicates of those forms filed with the Department of Energy for 1990.

(b) *Request for allowances*. (1) In addition to the application for certification, prior to, or accompanying, the request for allowances, the certifying official for the refinery shall submit an

Allowance Tracking System New Account/New Authorized Account Representative Form.

(2) The request for allowances shall be submitted to the address in § 72.13 and shall include the following information:

(i) Certification that all motor fuel produced by the refinery for which allowances are claimed meets the requirements of subsection 211(i) of the Clean Air Act;

(ii) For calendar year 1993 desulfurized diesel fuel, photocopies of Form 810 for October, November and December 1993;

(iii) For calendar years 1994 through 1999, inclusive, photocopies of Form 810 for each month in the respective calendar year.

(3) For joint ventures, each eligible refinery shall submit a separate application under paragraph (b)(2) of this section. Each application must include the diesel fuel throughput applicable to the joint agreement and the requested distribution of allowances that would be allocated to the joint agreement. If the applications for refineries involved in the joint agreement are inconsistent as to the throughput of diesel fuel applicable to the joint agreement or as to the distribution of the allowances, all involved applications will be considered void for purposes of the joint agreement.

(4) The certifying official shall submit all requests for allowances by April 1 of the calendar year following the year in which the diesel fuel was desulfurized to the Director, Acid Rain Division, under the procedures set forth in § 73.13 of this part.

(c) *Allowance allocation*. The Administrator will allocate allowances to the eligible refinery upon satisfactory submittal of information under paragraphs (a) and (b) of this section in the amount calculated according to the following equations. Such allowances will be allocated to the refinery's non-unit subaccount for the calendar year in which the application is made.

(1) Allowances allocated under this section to any eligible refinery will be limited to the tons of SO_2 attributable to the desulfurization of diesel fuel at the refinery. (2) The refinery will be allocated allowances for a calendar year and, in the case of 1993, for the period October 1 through December 31, calculated according to the following equation, but not to exceed 1500 for any calendar year:

$$\text{Allowances Requested} = \frac{\left[\begin{matrix}(a)\\ \text{Diesel Fuel Production}\end{matrix}\right] x \left[\begin{matrix}(b)\\ (302)\end{matrix}\right] x \left[\begin{matrix}(c)\\ (0.00224)\end{matrix}\right] x \left[\begin{matrix}(d)\\ (2)\end{matrix}\right]}{\left[\begin{matrix}2000\\ (e)\end{matrix}\right]}$$

Where:

a=diesel fuel in barrels for the year (or for October 1 through December 31 for 1993)

b=lbs per barrel of diesel

c=lbs of sulfur per lbs of diesel

d=lbs of SO_2 per lbs of sulfur

e=lbs per short ton

(3) If applications for a given year request, in the aggregate, more than 35,000 allowances, the Administrator will allocate allowances to each refinery in the amount equal to the lesser of 1500 or:

$$\text{Refinery Allowances} = \text{the lesser of} \left[\begin{array}{c} \text{Allowances Requested} \times \dfrac{\text{Total Allowances Requested}}{35{,}000} \\ \text{or} \\ 1{,}500 \end{array} \right]$$

[58 FR 15716, Mar. 23, 1993; 58 FR 33770, June 21, 1993]

PART 74—SULFUR DIOXIDE OPT-INS

Subpart A—Background and Summary

Sec.
74.1 Purpose and scope.
74.2 Applicability.
74.3 Relationship to the Acid Rain program requirements.
74.4 Designated representative.

Subpart B—Permitting Procedures

74.10 Roles—EPA and permitting authority.
74.12 Opt-in permit contents.
74.14 Opt-in permit process.
74.16 Application requirements for combustion sources.
74.17 Application requirements for process sources. [Reserved]
74.18 Withdrawal.
74.19 Revision and renewal of opt-in permit.

Subpart C—Allowance Calculation for Combustion Sources

74.20 Data for baseline and alternative baseline.
74.22 Actual SO_2 emissions rate.
74.23 1985 Allowable SO_2 emissions rate.
74.24 Current allowable SO_2 emissions rate.
74.25 Current promulgated SO_2 emissions limit.
74.26 Allocation formula.
74.28 Allowance Allocation for combustion sources becoming opt-in sources on a date other than January 1.

Subpart D—Allowance Calculation for Process Sources [Reserved]

Subpart E—Allowance Tracking and Transfer and End of Year Compliance

74.40 Establishment of opt-in source allowance accounts.
74.41 Identifying allowances.
74.42 Prohibition on future year transfers.
74.43 Annual compliance certification report.
74.44 Reduced utilization for combustion sources.
74.45 Reduced utilization for process sources [Reserved].
74.46 Opt-in source permanent shutdown, reconstruction, or change in affected status.
74.47 Transfer of allowances from the replacement of thermal energy—combustion sources.
74.48 Transfer of allowances from the replacement of thermal energy—process sources. [Reserved]
74.49 Calculation for deducting allowances.
74.50 Deducting opt-in source allowances from ATS accounts.

Subpart F—Monitoring Emissions: Combustion Sources

74.60 Monitoring requirements.
74.61 Monitoring plan.

Subpart G—Monitoring Emissions: Process Sources [Reserved]

AUTHORITY: 42 U.S.C. 7601 and 7651 *et seq.*

SOURCE: 60 FR 17115, Apr. 4, 1995, unless otherwise noted.

Subpart A—Background and Summary

§ 74.1 Purpose and scope.

The purpose of this part is to establish the requirements and procedures for:

(a) The election of a combustion or process source that emits sulfur dioxide to become an affected unit under the Acid Rain Program, pursuant to section 410 of title IV of the Clean Air Act, 42 U.S.C. 7401, *et seq.*, as amended by Public Law 101–549 (November 15, 1990); and

(b) Issuing and modifying operating permits; certifying monitors; and allocating, tracking, transferring, surrendering and deducting allowances for combustion or process sources electing to become affected units.

§74.2 Applicability.

Combustion or process sources that are not affected units under §72.6 of this chapter and that are operating and are located in the 48 contiguous States or the District of Columbia may submit an opt-in permit application to become opt-in sources upon issuance of an opt-in permit. Units for which a written exemption under §72.7 or §72.8 of this chapter is in effect and combustion or process sources that are not operating are not eligible to submit an opt-in permit application to become opt-in sources.

§74.3 Relationship to the Acid Rain program requirements.

(a) *General.* (1) For purposes of applying parts 72, 73, 75, 77 and 78, each opt-in source shall be treated as an affected unit.

(2) Subpart A, B, G, and H of part 72 of this chapter, including §§72.2 (definitions), 72.3 (measurements, abbreviations, and acronyms), 72.4 (federal authority), 72.5 (State authority), 72.6 (applicability), 72.7 (New units exemption), 72.8 (Retired units exemption), 72.9 (Standard Requirements), 72.10 (availability of information), and 72.11 (computation of time), shall apply to this part.

(b) *Permits.* The permitting authority shall act in accordance with this part and parts 70 and 72 of this chapter in issuing or denying an opt-in permit and incorporating it into a combustion or process source's operating permit. To the extent that any requirements of this part, part 72, and part 78 of this chapter are inconsistent with the requirements of part 70 of this chapter, the requirements of this part, part 72, and part 78 of this chapter shall take precedence and shall govern the issuance, denials, revision, reopening, renewal, and appeal of the opt-in permit.

(c) *Appeals.* The procedures for appeals of decisions of the Administrator under this part are contained in part 78 of this chapter.

(d) *Allowances.* A combustion or process source that becomes an affected unit under this part shall be subject to all the requirements of subparts C and D of part 73 of this chapter.

(e) *Excess emissions.* A combustion or process source that becomes an affected unit under this part shall be subject to the requirements of part 77 of this chapter applicable to excess emissions of sulfur dioxide and shall not be subject to the requirements of part 77 of this chapter applicable to excess emissions of nitrogen oxides.

(f) *Monitoring.* A combustion or process source that becomes an affected unit under this part shall be subject to all the requirements of part 75, consistent with subparts F and G of this part.

§74.4 Designated representative.

(a) The provisions of subpart B of part 72 of this chapter shall apply to the designated representative of an opt-in source.

(b) If a combustion or process source is located at the same source as one or more affected units, the combustion or process source shall have the same designated representative as the other affected units at the source.

Subpart B—Permitting Procedures

§74.10 Roles—EPA and permitting authority.

(a) *Administrator responsibilities.* The Administrator shall be responsible for the following activities under the opt-in provisions of the Acid Rain Program:

(1) *Calculating* the baseline or alternative baseline and allowance allocation, and allocating allowances for combustion or process sources that become affected units under this part;

(2) Certifying or recertifying monitoring systems for combustion or process sources as provided under §74.62;

(3) Establishing allowance accounts, tracking allowances, assessing end-of-year compliance, determining reduced utilization, approving thermal energy transfer and accounting for the replacement of thermal energy, closing accounts for opt-in sources that shut down, are reconstructed, become affected under §72.6 of this chapter, or fail to renew their opt-in permit, and deducting allowances as provided under subpart E of this part; and

(4) Ensuring that the opt-in source meets all withdrawal conditions prior to withdrawal from the Acid Rain Program as provided under §74.18; and

(5) Approving and disapproving the request to withdraw from the Acid Rain Program.

(b) *Permitting authority responsibilities.* The permitting authority shall be responsible for the following activities:

(1) Issuing the draft and final opt-in permit;

(2) Revising and renewing the opt-in permit; and

(3) Terminating the opt-in permit for an opt-in source as provided in § 74.18 (withdrawal), § 74.46 (shutdown, reconstruction or change in affected status) and § 74.50 (deducting allowances).

§ 74.12 Opt-in permit contents.

(a) The opt-in permit shall be included in the Acid Rain permit.

(b) *Scope.* The opt-in permit provisions shall apply only to the opt-in source and not to any other affected units.

(c) *Contents.* Each opt-in permit, including any draft or proposed opt-in permit, shall contain the following elements in a format specified by the Administrator:

(1) All elements required for a complete opt-in permit application as provided under § 74.16 for combustion sources or under § 74.17 for process sources or, if applicable, all elements required for a complete opt-in permit renewal application as provided in § 74.19 for combustion sources or under § 74.17 for process sources;

(2) The allowance allocation for the opt-in source as determined by the Administrator under subpart C of this part for combustion sources or subpart D of this part for process sources;

(3) The standard permit requirements as provided under § 72.9 of this chapter, except that the provisions in § 72.9(d) of this chapter shall not be included in the opt-in permit; and

(4) *Termination.* The provision that participation of a combustion or process source in the Acid Rain Program may be terminated only in accordance with § 74.18 (withdrawal), § 74.46 (shutdown, reconstruction, or change in affected status), and § 74.50 (deducting allowances).

(d) Each opt-in permit is deemed to incorporate the definitions of terms under § 72.2 of this chapter.

(e) *Permit shield.* Each opt-in source operated in accordance with the opt-in permit that governs the opt-in source and that was issued in compliance with title IV of the Act, as provided in this part and parts 72, 73, 75, 77, and 78 of this chapter, shall be deemed to be operating in compliance with the Acid Rain Program, except as provided in § 72.9(g)(6) of this chapter.

(f) *Term of opt-in permit.* An opt-in permit shall be issued for a period of 5 years and may be renewed in accordance with § 74.19; provided

(1) If an opt-in permit is issued prior to January 1, 2000, then the opt-in permit may, at the option of the permitting authority, expire on December 31, 1999; and

(2) If an affected unit with an Acid Rain permit is located at the same source as the combustion source, the combustion source's opt-in permit may, at the option of the permitting authority, expire on the same date as the affected unit's Acid Rain permit expires.

§ 74.14 Opt-in permit process.

(a) *Submission.* The designated representative of a combustion or process source may submit an opt-in permit application and a monitoring plan to the Administrator at any time for any combustion or process source that is operating.

(b) *Issuance or denial of opt-in permits.* The permitting authority shall issue or deny opt-in permits or revisions of opt-in permits in accordance with the procedures in part 70 of this chapter and subparts F and G of part 72 of this chapter, except as provided in this section.

(1) *Supplemental information.* Regardless of whether the opt-in permit application is complete, the Administrator or the permitting authority may request submission of any additional information that the Administrator or the permitting authority determines to be necessary in order to review the opt-in permit application or to issue an opt-in permit.

(2) *Interim review of monitoring plan.* The Administrator will determine, on an interim basis, the sufficiency of the monitoring plan, accompanying the

opt-in permit application. A monitoring plan is sufficient, for purposes of interim review, if the plan appears to contain information demonstrating that all SO_2 emissions, NO_x emissions, CO_2 emissions, and opacity of the combustion or process source are monitored and reported in accordance with part 75 of this chapter. This interim review of sufficiency shall not be construed as the approval or disapproval of the combustion or process source's monitoring system.

(3) *Issuance of draft opt-in permit.* After the Administrator determines whether the combustion or process source's monitoring plan is sufficient under paragraph (b)(2) of this section, the permitting authority shall serve the draft opt-in permit or the denial of a draft permit or the draft opt-in permit revisions or the denial of draft opt-in permit revisions on the designated representative of the combustion or process source submitting an opt-in permit application. A draft permit or draft opt-in permit revision shall not be served or issued if the monitoring plan is determined not to be sufficient.

(4) *Confirmation by source of intention to opt-in.* Within 21 calendar days from the date of service of the draft opt-in permit or the denial of the draft opt-in permit, the designated representative of a combustion or process source submitting an opt-in permit application must submit to the Administrator, in writing, a confirmation or recision of the source's intention to become an opt-in source under this part. The Administrator shall treat the failure to make a timely submission as a recision of the source's intention to become an opt-in source and as a withdrawal of the opt-in permit application.

(5) *Issuance of draft opt-in permit.* If the designated representative confirms the combustion or process source's intention to opt in under paragraph (b)(4) of this section, the permitting authority will give notice of the draft opt-in permit or denial of the draft opt-in permit and an opportunity for public comment, as provided under § 72.65 of this chapter with regard to a draft permit or denial of a draft permit if the Administrator is the permitting authority or as provided in accordance with part 70 of this chapter with regard to a draft permit or the denial of a draft permit if the State is the permitting authority.

(6) *Permit decision deadlines.* (i) If the Administrator is the permitting authority, an opt-in permit will be issued or denied within 12 months of receipt of a complete opt-in permit application.

(ii) If the State is the permitting authority, an opt-in permit will be issued or denied within 18 months of receipt of a complete opt-in permit application or such lesser time approved under part 70 of this chapter.

(7) *Withdrawal of opt-in permit application.* A combustion or process source may withdraw its opt-in permit application at any time prior to the issuance of the final opt-in permit. Once a combustion or process source withdraws its application, in order to reapply, it must submit a new opt-in permit application in accordance with § 74.16 for combustion sources or § 74.17 for process sources.

(c) [Reserved]

(d) *Entry into Acid Rain Program*—(1) *Effective date.* The effective date of the opt-in permit shall be the January 1, April 1, July 1, or October 1 for a combustion or process source providing monthly data under § 74.20, or January 1 for a combustion or process source providing annual data under § 74.20, following the later of the issuance of the opt-in permit by the permitting authority or the completion of monitoring system certification, as provided in subpart F of this part for combustion sources or subpart G of this part for process sources. The combustion or process source shall become an opt-in source and an affected unit as of the effective date of the opt-in permit.

(2) *Allowance allocation.* After the opt-in permit becomes effective, the Administrator will allocate allowances to the opt-in source as provided in § 74.40. If the effective date of the opt-in permit is not January 1, allowances for the first year shall be pro-rated as provided in § 74.28.

(e) *Expiration of opt-in permit.* An opt-in permit that is issued before the completion of monitoring system certification under subpart F of this part for combustion sources or under subpart G of this part for process sources shall

expire 180 days after the permitting authority serves the opt-in permit on the designated representative of the combustion or process source governed by the opt-in permit, unless such monitoring system certification is complete. The designated representative may petition the Administrator to extend this time period in which an opt-in permit expires and must explain in the petition why such an extension should be granted. The designated representative of a combustion source governed by an expired opt-in permit and that seeks to become an opt-in source must submit a new opt-in permit application.

§ 74.16 Application requirements for combustion sources.

(a) *Opt-in permit application.* Each complete opt-in permit application for a combustion source shall contain the following elements in a format prescribed by the Administrator:

(1) Identification of the combustion source, including company name, plant name, plant site address, mailing address, description of the combustion source, and information and diagrams on the combustion source's configuration;

(2) Identification of the designated representative, including name, address, telephone number, and facsimile number;

(3) The year and month the combustion source commenced operation;

(4) The number of hours the combustion source operated in the six months preceding the opt-in permit application and supporting documentation;

(5) The baseline or alternative baseline data under § 74.20;

(6) The actual SO_2 emissions rate under § 74.22;

(7) The allowable 1985 SO_2 emissions rate under § 74.23;

(8) The current allowable SO_2 emissions rate under § 74.24;

(9) The current promulgated SO_2 emissions rate under § 74.25;

(10) If the combustion source seeks to qualify for a transfer of allowances from the replacement of thermal energy, a thermal energy plan as provided in § 74.47 for combustion sources; and

(11) A statement whether the combustion source was previously an affected unit under this part;

(12) A statement that the combustion source is not an affected unit under § 72.6 of this chapter;

(13) A complete compliance plan for SO_2 under § 72.40 of this chapter; and

(14) The following statement signed by the designated representative of the combustion source: ''I certify that the data submitted under subpart C of part 74 reflects actual operations of the combustion source and has not been adjusted in any way.''

(b) *Accompanying documents.* The designated representative of the combustion source shall submit a monitoring plan in accordance with § 74.61.

§ 74.17 Application requirements for process sources. [Reserved]

§ 74.18 Withdrawal.

(a) *Withdrawal through administrative amendment.* An opt-in source may request to withdraw from the Acid Rain Program by submitting an administrative amendment under § 72.83 of this chapter; provided that the amendment will be treated as received by the permitting authority upon issuance of the notification of the acceptance of the request to withdraw under paragraph (f)(1) of this section.

(b) *Requesting withdrawal.* To withdraw from the Acid Rain Program, the designated representative of an opt-in source shall submit to the Administrator and the permitting authority a request to withdraw effective January 1 of the year after the year in which the submission is made. The submission shall be made no later than December 1 of the calendar year preceding the effective date of withdrawal.

(c) *Conditions for withdrawal.* In order for an opt-in source to withdraw, the following conditions must be met:

(1) By no later than January 30 of the first calendar year in which the withdrawal is to be effective, the designated representative must submit to the Administrator an annual compliance certification report pursuant to § 74.43.

(2) If the opt-in source has excess emissions in the calendar year before the year for which the withdrawal is to

be in effect, the designated representative must submit an offset plan for excess emissions, pursuant to part 77 of this chapter, that provides for immediate deduction of allowances.

(d) *Administrator's action on withdrawal.* After the opt-in source meets the requirements for withdrawal under paragraphs (b) and (c) of this section, the Administrator will deduct allowances required to be deducted under §73.35 of this chapter and part 77 of this chapter and allowances equal in number to and with the same or earlier compliance use date as those allocated under §74.40 for the first year for which the withdrawal is to be effective and all subsequent years. The Administrator will close the opt-in source's unit account and transfer any remaining allowances to a new general account as specified under §74.46(c).

(e) *Opt-in source's prior violations.* An opt-in source that withdraws from the Acid Rain Program shall comply with all requirements under the Acid Rain Program concerning all years for which the opt-in source was an affected unit, even if such requirements arise, or must be complied with after the withdrawal takes effect. The withdrawal shall not be a defense against any violation of such requirements of the Acid Rain Program whether the violation occurs before or after the withdrawal takes effect.

(f) *Notification.* (1) After the requirements for withdrawal under paragraphs (b) and (c) of this section are met and after the Administrator's action on withdrawal under paragraph (d) of this section is complete, the Administrator will issue a notification to the permitting authority and the designated representative of the opt-in source of the acceptance of the opt-in source's request to withdraw.

(2) If the requirements for withdrawal under paragraphs (b) and (c) of this section are not met or the Administrator's action under paragraph (d) of this section cannot be completed, the Administrator will issue a notification to the permitting authority and the designated representative of the opt-in source that the opt-in source's request to withdraw is denied. If the opt-in source's request to withdraw is denied, the opt-in source shall remain in the Opt-in Program and shall remain subject to the requirements for opt-in sources contained in this part.

(g) *Permit amendment.* (1) After the Administrator issues a notification under paragraph (f)(1) of this section that the requirements for withdrawal have been met (including the deduction of the full amount of allowances as required under paragraph (d) of this section), the permitting authority shall amend, in accordance with §§72.80 and 72.83 (administrative amendment) of this chapter, the opt-in source's Acid Rain permit to terminate the opt-in permit, not later than 60 days from the issuance of the notification under paragraph (f) of this section.

(2) The termination of the opt-in permit under paragraph (g)(1) of this section will be effective on January 1 of the year for which the withdrawal is requested. An opt-in source shall continue to be an affected unit until the effective date of the termination.

(h) *Reapplication upon failure to meet conditions of withdrawal.* If the Administrator denies the opt-in source's request to withdraw, the designated representative may submit another request to withdraw in accordance with paragraphs (b) and (c) of this section.

(i) *Ability to return to the Acid Rain Program.* Once a combustion or process source withdraws from the Acid Rain Program and its opt-in permit is terminated, a new opt-in permit application for the combustion or process source may not be submitted prior to the date that is four years after the date on which the opt-in permit became effective.

§74.19 Revision and renewal of opt-in permit.

(a) The designated representative of an opt-in source may submit revisions to its opt-in permit in accordance with subpart H of part 72 of this chapter.

(b) The designated representative of an opt-in source may renew its opt-in permit by meeting the following requirements:

(1)(i) In order to renew an opt-in permit if the Administrator is the permitting authority for the renewed permit, the designated representative of an

opt-in source must submit to the Administrator an opt-in permit application at least 6 months prior to the expiration of an existing opt-in permit.

(ii) In order to renew an opt-in permit if the State is the permitting authority for the renewed permit, the designated representative of an opt-in source must submit to the permitting authority an opt-in permit application at least 18 months prior to the expiration of an existing opt-in permit or such shorter time as may be approved for operating permits under part 70 of this chapter.

(2) Each complete opt-in permit application submitted to renew an opt-in permit shall contain the following elements in a format prescribed by the Administrator:

(i) Elements contained in the opt-in source's initial opt-in permit application as specified under § 74.16(a)(1), (2), (10), (11), (12), and (13).

(ii) An updated monitoring plan, if applicable under § 75.53(b) of this chapter.

(c)(1) Upon receipt of an opt-in permit application submitted to renew an opt-in permit, the permitting authority shall issue or deny an opt-in permit in accordance with the requirements under subpart B of this part, except as provided in paragraph (c)(2) of this section.

(2) When issuing a renewed opt-in permit, the permitting authority shall not alter an opt-in source's allowance allocation as established, under subpart B and subpart C of this part for combustion sources and under subpart B and subpart D of this part for process sources, in the opt-in permit that is being renewed.

Subpart C—Allowance Calculations for Combustion Sources

§ 74.20 Data for baseline and alternative baseline.

(a) *Acceptable data.* (1) The designated representative of a combustion source shall submit either the data specified in this paragraph or alternative data under paragraph (c) of this section. The designated representative shall also submit the calculations under this section based on such data.

(2) The following data shall be submitted for the combustion source for the calendar year(s) under paragraph (a)(3) of this section:

(i) Monthly or annual quantity of each type of fuel consumed, expressed in thousands of tons for coal, thousands of barrels for oil, and million standard cubic feet (scf) for natural gas. If other fuels are used, the combustion source must specify units of measure.

(ii) Monthly or annual heat content of fuel consumed for each type of fuel consumed, expressed in British thermal units (Btu) per pound for coal, Btu per barrel for oil, and Btu per standard cubic foot (scf) for natural gas. If other fuels are used, the combustion source must specify units of measure.

(iii) Monthly or annual sulfur content of fuel consumed for each type of fuel consumed, expressed as a percentage by weight.

(3) *Calendar Years.* (i) For combustion sources that commenced operating prior to January 1, 1985, data under this section shall be submitted for 1985, 1986, and 1987.

(ii) For combustion sources that commenced operation after January 1, 1985, the data under this section shall be submitted for the first three consecutive calendar years during which the combustion source operated after December 31, 1985.

(b) *Calculation of baseline and alternative baseline.*

(1) For combustion sources that commenced operation prior to January 1, 1985, the baseline is the average annual quantity of fuel consumed during 1985, 1986, and 1987, expressed in mmBtu. The baseline shall be calculated as follows:

$$\text{baseline} = \frac{\sum_{\text{Year}=1985}^{1987} \text{annual fuel consumption}}{3}$$

where,

(i) for a combustion source submitting monthly data,

$$\text{annual fuel consumption} = \sum_{\text{months=Jan}}^{\text{Dec}} \sum_{\text{Fuel Types}} \left[\begin{array}{c} \text{quantity of fuel consumed} \\ \times \text{ heat content } \times \text{ unit conversion} \end{array} \right]$$

and unit conversion
= 2 for coal
= 0.001 for oil
= 1 for gas

For other fuels, the combustion source must specify unit conversion; or

(ii) for a combustion source submitting annual data,

$$\text{annual fuel consumption} = \sum_{\text{Fuel Types}} \left[\begin{array}{c} \text{quantity of fuel consumed} \\ \times \text{ heat content } \times \text{ unit conversion} \end{array} \right]$$

and unit conversion
= 2 for coal
= 0.001 for oil
= 1 for gas

For other fuels, the combustion source must specify unit conversion.

(2) For combustion sources that commenced operation after January 1, 1985, the alternative baseline is the average annual quantity of fuel consumed in the first three consecutive calendar years during which the combustion source operated after December 31, 1985, expressed in mmBtu. The alternative baseline shall be calculated as follows:

$$\text{alternative baseline} = \frac{\sum_{\text{First 3 consecutive years}} \text{annual fuel consumption}}{3}$$

where,

''annual fuel consumption'' is as defined under paragraph (b)(1)(i) or (ii) of this section.

(c) *Alternative data.* (1) For combustion sources for which any of the data under paragraph (b) of this section is not available due solely to a natural catastrophe, data as set forth in paragraph (a)(2) of this section for the first three consecutive calendar years for which data is available after December 31, 1985, may be submitted. The alternative baseline for these combustion sources shall be calculated using the equation for alternative baseline in paragraph (b)(2) of this section and the definition of annual fuel consumption in paragraphs (b)(1)(i) or (ii) of this section.

(2) Except as provided in paragraph (c)(1) of this section, no alternative data may be submitted. A combustion source that cannot submit all required data, in accordance with this section, shall not be eligible to submit an opt-in permit application.

(d) *Administrator's action.* The Administrator may accept in whole or in part or with changes as appropriate, request additional information, or reject data or alternative data submitted for a combustion source's baseline or alternative baseline.

§ 74.22 Actual SO_2 emissions rate.

(a) *Data requirements.* The designated representative of a combustion source shall submit the calculations under this section based on data submitted

under § 74.20 for the following calendar year:

(1) For combustion sources that commenced operation prior to January 1, 1985, the calendar year for calculating the actual SO_2 emissions rate shall be 1985.

(2) For combustion sources that commenced operation after January 1, 1985, the calendar year for calculating the actual SO_2 emissions rate shall be the first year of the three consecutive calendar years of the alternative baseline under § 74.20(b)(2).

(3) For combustion sources meeting the requirements of § 74.20(c), the calendar year for calculating the actual SO_2 emissions rate shall be the first year of the three consecutive calendar years to be used as alternative data under § 74.20(c).

(b) *SO_2 emissions factor calculation.* The SO_2 emissions factor for each type of fuel consumed during the specified year, expressed in pounds per thousand tons for coal, pounds per thousand barrels for oil and pounds per million cubic feet (scf) for gas, shall be calculated as follows:

SO_2 Emissions Factor
= (average percent of sulfur by weight) x (k),

where,

average percent of sulfur by weight
= annual average, for a combustion source submitting annual data
= monthly average, for a combustion source submitting monthly data

k = 39,000 for bituminous coal or anthracite
= 35,000 for subbituminous coal
= 30,000 for lignite
= 5,964 for distillate (light) oil
= 6,594 for residual (heavy) oil
= 0.6 for natural gas

For other fuels, the combustion source must specify the SO_2 emissions factor.

(c) *Annual SO_2 emissions calculation.* Annual SO_2 Emissions for the specified calendar year, expressed in pounds, shall be calculated as follows:

(1) For a combustion source submitting monthly data,

$$\text{Annual } SO_2 \text{ Emissions} = \sum_{\text{months=Jan}}^{\text{Dec}} \sum_{\text{Fuel Types}} \left[\begin{array}{c} \text{quantity of fuel consumed} \\ \times\, SO_2 \text{ emissions factor} \\ \times\, (1 - \text{control system efficiency}) \\ \times\, (1 - \text{fuel pre-treatment efficiency}) \end{array} \right]$$

(2) For a combustion source submitting annual data:

$$\text{Annual } SO_2 \text{ Emissions} = \sum_{\text{Fuel Types}} \left[\begin{array}{c} \text{quantity of fuel consumed} \\ \times\, SO_2 \text{ emissions factor} \\ \times\, (1 - \text{control system efficiency}) \\ \times\, (1 - \text{fuel pre-treatment efficiency}) \end{array} \right]$$

where,

''quantity of fuel consumed'' is as defined under § 74.20(a)(2)(A);

''SO_2 emissions factor'' is as defined under paragraph (b) of this section;

''control system efficiency'' is as defined under § 60.48(a) and part 60, Appendix A, Method 19 of this chapter, if applicable; and

''fuel pre-treatment efficiency'' is as defined under § 60.48(a) and part 60, Appendix A, Method 19 of this chapter, if applicable.

(d) *Annual fuel consumption calculation.* Annual fuel consumption for the specified calendar year, expressed in mmBtu, shall be calculated as defined under § 74.20(b)(1) (i) or (ii).

(e) *Actual SO_2 emissions rate calculation.* The actual SO_2 emissions rate for the specified calendar year, expressed in lbs/mmBtu, shall be calculated as follows:

$$\text{Actual } SO_2 \text{ Emissions Rate} = \frac{\text{Annual } SO_2 \text{ Emissions}}{\text{Annual Fuel Consumption}}$$

§ 74.23 1985 Allowable SO_2 emissions rate.

(a) *Data requirements.* (1) The designated representative of the combustion source shall submit the following data and the calculations under paragraph (b) of this section based on the submitted data:

(i) Allowable SO_2 emissions rate of the combustion source expressed in lbs/mmBtu as defined under § 72.2 of this chapter for the calendar year specified in paragraph (a)(2) of this section. If the allowable SO_2 emissions rate is not expressed in lbs/mmBtu, the allowable emissions rate shall be converted to lbs/mmBtu by multiplying the emissions rate by the appropriate factor as specified in Table 1 of this section.

TABLE 1.—FACTORS TO CONVERT EMISSION LIMITS TO POUNDS OF SO_2/mmBtu

Unit measurement	Bituminous coal	Subbituminous coal	Lignite coal	Oil
lbs Sulfur/mmBtu	2.0	2.0	2.0	2.0
% Sulfur in fuel	1.66	2.22	2.86	1.07
ppm SO_2	0.00287	0.00384	.....	0.00167
ppm Sulfur in fuel	.....	.....	.....	0.00334
tons SO_2/hour	2×8760/(annual fuel consumption for specified year [1]×10^3)			
lbs SO_2/hour	8760/(annual fuel consumption for specified year [1]×10^6)			

1 Annual fuel consumption as defined under § 74.20(b)(1) (i) or (ii); specified calendar year as defined under § 74.23(a)(2).

(ii) Citation of statute, regulations, and any other authority under which the allowable emissions rate under paragraph (a)(1) of this section is established as applicable to the combustion source;

(iii) Averaging time associated with the allowable emissions rate under paragraph (a)(1) of this section.

(iv) The annualization factor for the combustion source, based on the type of combustion source and the associated averaging time of the allowable emissions rate of the combustion source, as set forth in the Table 2 of this section:

TABLE 2.—ANNUALIZATION FACTORS FOR SO_2 Emission Rates

Type of combustion source	Annualization factor for scrubbed unit	Annualization factor for unscrubbed unit
Unit Combusting Oil, Gas, or some combination	1.00	1.00
Coal Unit with Averaging Time <= 1 day	0.93	0.89
Coal Unit with Averaging Time = 1 week	0.97	0.92
Coal Unit with Averaging Time = 30 days	1.00	0.96
Coal Unit with Averaging Time = 90 days	1.00	1.00
Coal Unit with Averaging Time = 1 year	1.00	1.00
Coal Unit with Federal Limit, but Averaging Time Not Specified	0.93	0.89

(2) *Calendar year.* (i) For combustion sources that commenced operation prior to January 1, 1985, the calendar year for the allowable SO_2 emissions rate shall be 1985.

(ii) For combustion sources that commenced operation after January 1, 1985, the calendar year for the allowable SO_2 emissions rate shall be the first year of the three consecutive calendar years of the alternative baseline under § 74.20(b)(2).

(iii) For combustion sources meeting the requirements of § 74.20(c), the calendar year for calculating the allowable SO_2 emissions rate shall be the first year of the three consecutive calendar years to be used as alternative data under § 74.20(c).

(b) *1985 Allowable SO_2 emissions rate calculation*. The allowable SO_2 emissions rate for the specified calendar year shall be calculated as follows:

1985 Allowable SO_2 Emissions Rate = (Allowable SO_2 Emissions Rate) × (Annualization Factor)

§ 74.24 Current allowable SO_2 emissions rate.

The designated representative shall submit the following data:

(a) Current allowable SO_2 emissions rate of the combustion source, expressed in lbs/mmBtu, which shall be the most stringent federally enforceable emissions limit in effect as of the date of submission of the opt-in application. If the allowable SO_2 emissions rate is not expressed in lbs/mmBtu, the allowable emissions rate shall be converted to lbs/mmBtu by multiplying the allowable rate by the appropriate factor as specified in Table 1 in § 74.23(a)(1)(i).

(b) Citations of statute, regulation, and any other authority under which the allowable emissions rate under paragraph (a) of this section is established as applicable to the combustion source;

(c) Averaging time associated with the allowable emissions rate under paragraph (a) of this section.

§ 74.25 Current promulgated SO_2 emissions limit.

The designated representative shall submit the following data:

(a) Current promulgated SO_2 emissions limit of the combustion source, expressed in lbs/mmBtu, which shall be the most stringent federally enforceable emissions limit that has been promulgated as of the date of submission of the opt-in permit application and that either is in effect on that date or will take effect after that date. If the promulgated SO_2 emissions limit is not expressed in lbs/mmBtu, the limit shall be converted to lbs/mmBtu by multiplying the limit by the appropriate factor as specified in Table 1 of § 74.23(a)(1)(i).

(b) Citations of statute, regulation and any other authority under which the emissions limit under paragraph (a) of this section is established as applicable to the combustion source;

(c) Averaging time associated with the emissions limit under paragraph (a) of this section.

(d) Effective date of the emissions limit under paragraph (a) of this section.

§ 74.26 Allocation formula.

(a) The Administrator will calculate the annual allowance allocation for a combustion source based on the data, corrected as necessary, under § 74.20 through § 74.25 as follows:

(1) For combustion sources for which the current promulgated SO_2 emissions limit under § 74.25 is greater than or equal to the current allowable SO_2 emissions rate under § 74.24, the number of allowances allocated for each year equals:

$$\text{Allowances} = \frac{\begin{bmatrix}\text{baseline}\\ \text{or}\\ \text{alternative baseline}\end{bmatrix} \times \text{the lesser of} \begin{bmatrix}\text{the actual } SO_2 \text{ emissions rate}\\ \text{or}\\ \text{the 1985 allowable } SO_2 \text{ emissions rate}\\ \text{or}\\ \text{the current allowable } SO_2 \text{ emissions rate}\end{bmatrix}}{2000}$$

(2) For combustion sources in which the current promulgated SO_2 emissions limit under § 74.25 is less than the current allowable SO_2 emissions rate under § 74.24.

(i) The number of allowances for each year ending prior to the effective date of the promulgated SO_2 emissions limit equals:

$$\text{Allowances} = \frac{\begin{bmatrix}\text{baseline}\\ \text{or}\\ \text{alternative baseline}\end{bmatrix} \times \text{the lesser of} \begin{bmatrix}\text{the actual } SO_2 \text{ emissions rate}\\ \text{or}\\ \text{the 1985 allowable } SO_2 \text{ emissions rate}\\ \text{or}\\ \text{the current allowable } SO_2 \text{ emissions rate}\end{bmatrix}}{2000}$$

(ii) The number of allowances for the year that includes the effective date of the promulgated SO_2 emissions limit and for each year thereafter equals:

$$\text{Allowances} = \frac{\begin{bmatrix}\text{baseline}\\ \text{or}\\ \text{alternative baseline}\end{bmatrix} \times \text{the lesser of} \begin{bmatrix}\text{the actual } SO_2 \text{ emissions rate}\\ \text{or}\\ \text{the 1985 allowable } SO_2 \text{ emissions rate}\\ \text{or}\\ \text{the current promulgated } SO_2 \text{ emissions rate}\end{bmatrix}}{2000}$$

§ 74.28 Allowance allocation for combustion sources becoming opt-in sources on a date other than January 1.

(a) *Dates of entry.* (1) If an opt-in source provided monthly data under § 74.20, the opt-in source's opt-in permit may become effective at the beginning of a calendar quarter as of January 1, April 1, July 1, or October 1.

(2) If an opt-in source provided annual data under § 74.20, the opt-in source's opt-in permit must become effective on January 1.

(b) *Prorating by Calendar Quarter.* Where a combustion source's opt-in permit becomes effective on April 1, July 1, or October 1 of a given year, the Administrator will prorate the allowance allocation for that first year by the calendar quarters remaining in the year as follows:

Allowances for the first year

$$= \left(\frac{\text{first year partial baseline}}{\text{baseline or alternative baseline}}\right) \times \text{annual allocation of allowances for the first year}$$

(1) For combustion sources that commenced operations before January 1, 1985,

$$\text{first year partial baseline} = \frac{\sum_{\text{Year}=1985}^{1987} \text{fuel consumption for remaining calendar quarters}}{3}$$

(2) For combustion sources that commenced operations after January 1, 1985,

$$\text{first year partial baseline} = \sum_{\text{First 3 consecutive years}} \frac{\text{fuel consumption for the remaining calendar quarters}}{3}$$

(3) Under paragraphs (b) (1) and (2) of this section,

(i) ''Remaining calendar quarters'' shall be the calendar quarters in the first year for which the opt-in permit will be effective.

(ii) Fuel consumption for remaining calendar quarters =

$$\sum_{\text{months}=\text{Apr., Jul., or Oct.}}^{\text{Dec}} \cdot \sum_{\text{Fuel Types}} \text{quantity of fuel consumed} \times \text{heat content} \times \text{unit conversion}$$

where unit conversion
= 2 for coal
= 0.001 for oil
= 1 for gas

For other fuels, the combustion source must specify unit conversion;

and where starting month
= April, if effective date is April 1;
= July, if effective date is July 1; and
= October, if effective date is October 1.

Subpart D—Allowance Calculations for Process Sources—[Reserved]

Subpart E—Allowance Tracking and Transfer and End of Year Compliance

§ 74.40 Establishment of opt-in source allowance accounts.

(a) *Establishing accounts.* Not earlier than the date on which a combustion or process source becomes an affected unit under this part and upon receipt of a request for an opt-in account under paragraph (b) of this section, the Administrator will establish an account and allocate allowances in accordance with subpart C of this part for combustion sources or subpart D of this part for process sources. A separate unit account will be established for each opt-in source.

(b) *Request for opt-in account.* The designated representative of the opt-in source shall, on or after the effective date of the opt-in permit as specified in § 74.14(d), submit a letter requesting the opening of an allowance account in the Allowance Tracking System to the Administrator.

§ 74.41 Identifying allowances.

(a) *Identifying allowances.* Allowances allocated to an opt-in source will be assigned a serial number that identifies them as being allocated under an opt-in permit.

(b) *Submittal of opt-in allowances for auction.* (1) An authorized account representative may offer for sale in the spot auction under § 73.70 of this chapter allowances that are allocated to opt-in sources, if the allowances have a compliance use date earlier than the year in which the spot auction is to be

held and if the Administrator has completed the deductions for compliance under §73.35(b) for the compliance year corresponding to the compliance use date of the offered allowances.

(2) Authorized account representatives may not offer for sale in the advance auctions under §73.70 of this chapter allowances allocated to opt-in sources.

§74.42 Prohibition on future year transfers.

(a) The Administrator will not record a transfer of opt-in allowances allocated to opt-in sources from a future year subaccount into any other future year subaccount in the Allowance Tracking System.

§74.43 Annual compliance certification report.

(a) *Applicability and deadline.* For each calendar year in which an opt-in source is subject to the Acid Rain emissions limitations, the designated representative of the opt-in source shall submit to the Administrator, no later than 60 days after the end of the calendar year, an annual compliance certification report for the opt-in source in lieu of any annual compliance certification report required under subpart I of part 72 of this chapter.

(b) *Contents of report.* The designated representative shall include in the annual compliance certification report the following elements, in a format prescribed by the Administrator, concerning the opt-in source and the calendar year covered by the report:

(1) Identification of the opt-in source;

(2) An opt-in utilization report in accordance with §74.44 for combustion sources and §74.45 for process sources;

(3) A thermal energy compliance report in accordance with §74.47 for combustion sources and §74.48 for process sources, if applicable;

(4) Shutdown or reconstruction information in accordance with §74.46, if applicable;

(5) A statement that the opt-in source has not become an affected unit under §72.6 of this chapter;

(6) At the designated representative's option, the total number of allowances to be deducted for the year, using the formula in §74.49, and the serial numbers of the allowances that are to be deducted; and

(7) At the designated representative's option, for opt-in sources that share a common stack and whose emissions of sulfur dioxide are not monitored separately or apportioned in accordance with part 75 of this chapter, the percentage of the total number of allowances under paragraph (b)(6) of this section for all such affected units that is to be deducted from each affected unit's compliance subaccount; and

(8) The compliance certification under paragraph (c) of this section.

(c) *Annual compliance certification.* In the annual compliance certification report under paragraph (a) of this section, the designated representative shall certify, based on reasonable inquiry of those persons with primary responsibility for operating the opt-in source in compliance with the Acid Rain Program, whether the opt-in source was operated during the calendar year covered by the report in compliance with the requirements of the Acid Rain Program applicable to the opt-in source, including:

(1) Whether the opt-in source was operated in compliance with applicable Acid Rain emissions limitations, including whether the opt-in source held allowances, as of the allowance transfer deadline, in its compliance subaccount (after accounting for any allowance deductions or other adjustments under §73.34(c) of this chapter) not less than the opt-in source's total sulfur dioxide emissions during the calendar year covered by the annual report;

(2) Whether the monitoring plan that governs the opt-in source has been maintained to reflect the actual operation and monitoring of the opt-in source and contains all information necessary to attribute monitored emissions to the opt-in source;

(3) Whether all the emissions from the opt-in source or group of affected units (including the opt-in source) using a common stack were monitored or accounted for through the missing data procedures and reported in the quarterly monitoring reports in accordance with part 75 of this chapter;

(4) Whether the facts that form the basis for certification of each monitor at the opt-in source or group of affected units (including the opt-in source) using a common stack or of an opt-in source's qualifications for using an Acid Rain Program excepted monitoring method or approved alternative monitoring method, if any, have changed;

(5) If a change is required to be reported under paragraph (c)(4) of this section, specify the nature of the change, the reason for the change, when the change occurred, and how the unit's compliance status was determined subsequent to the change, including what method was used to determine emissions when a change mandated the need for monitoring recertification; and

(6) When applicable, whether the opt-in source was operating in compliance with its thermal energy plan as provided in § 74.47 for combustion sources and § 74.48 for process sources.

§ 74.44 Reduced utilization for combustion sources.

(a) *Calculation of utilization*—(1) *Annual utilization.* (i) Except as provided in paragraph (a)(1)(ii) of this section, annual utilization for the calendar year shall be calculated as follows:

Annual Utilization = Actual heat input + Reduction from improved efficiency

where,

(A) ''Actual heat input'' shall be the actual annual heat input (in mmBtu) of the opt-in source for the calendar year determined in accordance with Appendix F of part 75 of this chapter.

(B) ''Reduction from improved efficiency'' shall be the sum of the following four elements: Reduction from demand side measures that improve the efficiency of electricity consumption; reduction from demand side measures that improve the efficiency of steam consumption; reduction from improvements in the heat rate at the opt-in source; and reduction from improvement in the efficiency of steam production at the opt-in source. Qualified demand side measures applicable to the calculation of utilization for opt-in sources are listed in Appendix A, Section 1 of part 73 of this chapter.

(C) ''Reduction from demand side measures that improve the efficiency of electricity consumption'' shall be a good faith estimate of the expected kilowatt hour savings during the calendar year for such measures and the corresponding reduction in heat input (in mmBtu) resulting from those measures. The demand side measures shall be implemented at the opt-in source, in the residence or facility to which the opt-in source delivers electricity for consumption or in the residence or facility of a customer to whom the opt-in source's utility system sells electricity. The verified amount of such reduction shall be submitted in accordance with paragraph (c)(2) of this section.

(D) ''Reduction from demand side measures that improve the efficiency of steam consumption'' shall be a good faith estimate of the expected steam savings (in mmBtu) from such measures during the calendar year and the corresponding reduction in heat input (in mmBtu) at the opt-in source as a result of those measures. The demand side measures shall be implemented at the opt-in source or in the facility to which the opt-in source delivers steam for consumption. The verified amount of such reduction shall be submitted in accordance with paragraph (c)(2) of this section.

(E) ''Reduction from improvements in heat rate'' shall be a good faith estimate of the expected reduction in heat rate during the calendar year and the corresponding reduction in heat input (in mmBtu) at the opt-in source as a result of all improved unit efficiency measures at the opt-in source and may include supply-side measures listed in Appendix A, section 2.1 of part 73 of this chapter. The verified amount of such reduction shall be submitted in accordance with paragraph (c)(2) of this section.

(F) ''Reduction from improvement in the efficiency of steam production at the opt-in source'' shall be a good faith estimate of the expected improvement in the efficiency of steam production at the opt-in source during the calendar year and the corresponding reduction in heat input (in mmBtu) at the opt-in source as a result of all improved steam production efficiency

measures. In order to claim improvements in the efficiency of steam production, the designated representative of the opt-in source must demonstrate to the satisfaction of the Administrator that the heat rate of the opt-in source has not increased. The verified amount of such reduction shall be submitted in accordance with paragraph (c)(2) of this section.

(G) Notwithstanding paragraph (a)(1)(i)(B) of this section, where two or more opt-in sources, or two or more opt-in sources and Phase I units, include in their annual compliance certification reports their good faith estimate of kilowatt hour savings or steam savings from the same demand side measures that improve the efficiency of electricity or steam consumption:

(*1*) The designated representatives of all such opt-in sources and Phase I units shall submit with their annual compliance certification reports a certification signed by all such designated representatives. The certification shall apportion the total kilowatt hour savings or steam savings among such opt-in sources and Phase I units.

(*2*) Each designated representative shall include in its annual compliance certification report only its share of kilowatt hour savings or steam savings.

(ii) For an opt-in source whose opt-in permit becomes effective on a date other than January 1, annual utilization for the first year shall be calculated as follows:

$$\text{Annual Utilization} = \begin{matrix}\text{Actual heat input}\\ \text{for the remaining calendar quarters}\end{matrix} + \begin{matrix}\text{Reduction from improved efficiency}\\ \text{for the remaining calendar quarters}\end{matrix}$$

where ''actual heat input'' and ''reduction from improved efficiency'' are defined as set forth in paragraph (a)(1)(i) of this section but are restricted to data or estimates for the ''remaining calendar quarters'', which are the calendar quarters that begin on or after the date the opt-in permit becomes effective.

(2) *Average utilization*. Average utilization for the calendar year shall be defined as the average of the annual utilization calculated as follows:

(i) For the first two calendar years after the effective date of an opt-in permit taking effect on January 1 or for the first two calendar years after the effective date of a thermal energy plan governing an opt-in source in accordance with § 74.47 of this chapter, average utilization will be calculated as follows:

(A) Average utilization for the first year = annual $\text{utilization}_{\text{year 1}}$

where ''annual $\text{utilization}_{\text{year 1}}$'' is as calculated under paragraph (a)(1)(i) of this section.

(B) Average utilization for the second year

$$= \left(\frac{\text{revised annual utilization}_{\text{year 1}} + \text{annual utilization}_{\text{year 2}}}{2}\right)$$

where,

''revised annual $\text{utilization}_{\text{year 1}}$'' is as submitted for the year under paragraph (c)(2)(i)(B) of this section and adjusted under paragraph (c)(2)(iii) of this section;

''annual $\text{utilization}_{\text{year 2}}$'' is as calculated under paragraph (a)(1)(i) of this section.

(ii) For the first three calendar years after the effective date of the opt-in permit taking effect on a date other than January 1, average utilization will be calculated as follows:

(A) Average utilization for the first year after opt-in = annual $\text{utilization}_{\text{year 1}}$

where ''annual utilization$_{year\ 1}$'' is as calculated under paragraph (a)(1)(ii) of this section.

(B) Average utilization for the second year after opt-in

where,

$$= \left(\frac{\text{revised annual utilization}_{\text{year 1}} + \text{annual utilization}_{\text{year 2}}}{\left(\begin{array}{c} \text{Number of months} \\ \text{in year 1 and year 2 for which} \\ \text{the opt-in permit is effective} \end{array} \right)} \right) \times 12$$

''revised annual utilization$_{year\ 1}$'' is as submitted for the year under paragraph (c)(2)(i)(B) of this section and adjusted under paragraph (c)(2)(iii) of this section; and

''annual utilization$_{year\ 2}$'' is as calculated under paragraph (a)(1)(ii) of this section.

(C) Average utilization for the third year after opt-in

$$= \left(\frac{\text{revised annual utilization}_{\text{year 1}} + \text{revised annual utilization}_{\text{year 2}} + \text{annual utilization}_{\text{year 3}}}{\left(\begin{array}{c} \text{Number of months} \\ \text{in year 1, year 2, and year 3} \\ \text{for which the opt-in permit is effective} \end{array} \right)} \right) \times 12$$

where,

''revised annual utilization$_{year\ 1}$'' is as submitted for the year under paragraph (c)(2)(i)(B) of this section and adjusted under paragraph (c)(2)(iii) of this section; and

''revised annual utilization$_{year\ 2}$'' is as submitted for the year under paragraph (c)(2)(i)(B) of this section and adjusted under paragraph (c)(2)(iii) of this section; and

''annual utilization$_{year\ 3}$'' is as calculated under paragraph (a)(1)(ii) of this section.

(iii) Except as provided in paragraphs (a)(2)(i) and (a)(2)(ii), average utilization shall be the sum of annual utilization for the calendar year and the revised annual utilization, submitted under paragraph (c)(2)(i)(B) of this section and adjusted by the Administrator under paragraph (c)(2)(iii) of this section, for the two immediately preceding calendar years divided by 3.

(b) *Determination of reduced utilization and calculation of allowances*—(1) *Determination of reduced utilization.* For a year during which its opt-in permit is effective, an opt-in source has reduced utilization if the opt-in source's average utilization for the calendar year, as calculated under paragraph (a) of this section, is less than its baseline.

(2) *Calculation of allowances deducted for reduced utilization.* If the Administrator determines that an opt-in source has reduced utilization for a calendar year during which the opt-in source's opt-in permit is in effect, the Administrator will deduct allowances, as calculated under paragraph (b)(2)(i) of this section, from the compliance subaccount of the opt-in source's Allowance Tracking System account.

(i) Allowances deducted for reduced utilization =

$$\text{Number of allowances allocated for the calendar year} \times \left(1 - \left(\frac{\text{average utilization}_{\text{calendar year}}}{\text{baseline}}\right)\right)$$

(ii) The allowances deducted shall have the same or an earlier compliance use date as those allocated under subpart C of this part for the calendar year for which the opt-in source has reduced utilization.

(c) *Compliance*—(1) *Opt-in Utilization Report*. The designated representative for each opt-in source shall submit an opt-in utilization report for the calendar year, as part of its annual compliance certification report under § 74.43, that shall include the following elements in a format prescribed by the Administrator:

(i) The name, authorized account representative identification number, and telephone number of the designated representative of the opt-in source;

(ii) The opt-in source's account identification number in the Allowance Tracking System;

(iii) The opt-in source's annual utilization for the calendar year, as defined under paragraph (a)(1) of this section, and the revised annual utilization, submitted under paragraph (c)(2)(i)(B) of this section and adjusted under paragraph (c)(2)(iii) of this section, for the two immediately preceding calendar years;

(iv) The opt-in source's average utilization for the calendar year, as defined under paragraph (a)(2) of this section;

(v) The difference between the opt-in source's average utilization and its baseline;

(vi) The number of allowances that shall be deducted, if any, using the formula in paragraph (b)(2)(i) of this section and the supporting calculations;

(2) *Confirmation report*. (i) If the annual compliance certification report for an opt-in source includes estimates of any reduction in heat input resulting from improved efficiency as defined under paragraph (a)(1)(i) of this section, the designated representative shall submit, by July 1 of the year in which the annual compliance certification report was submitted, a confirmation report, concerning the calendar year covered by the annual compliance certification report. The Administrator may grant, for good cause shown, an extension of the time to file the confirmation report. The confirmation report shall include the following elements in a format prescribed by the Administrator:

(A) *Verified reduction in heat input*. Any verified kwh savings or any verified steam savings from demand side measures that improve the efficiency of electricity or steam consumption, any verified reduction in the heat rate at the opt-in source, or any verified improvement in the efficiency of steam production at the opt-in source achieved and the verified corresponding reduction in heat input for the calendar year that resulted.

(B) *Revised annual utilization*. The opt-in source's annual utilization for the calendar year as provided under paragraph (c)(1)(iii) of this section, recalculated using the verified reduction in heat input for the calendar year under paragraph (c)(2)(i)(A) of this section.

(C) *Revised average utilization*. The opt-in source's average utilization as provided under paragraph (c)(1)(iv) of this section, recalculated using the verified reduction in heat input for the calendar year under paragraph (c)(2)(i)(A) of this section.

(D) *Recalculation of reduced utilization*. The difference between the opt-in source's recalculated average utilization and its baseline.

(E) *Allowance adjustment*. The number of allowances that should be credited or deducted using the formulas in paragraphs (c)(2)(iii)(C) and (D) of this section and the supporting calculations; and the number of adjusted allowances remaining using the formula in paragraph (c)(2)(iii)(E) of this section and the supporting calculations.

(ii) *Documentation*. (A) For all figures under paragraphs (c)(2)(i)(A) of this section, the opt-in source must provide as part of the confirmation report, documentation (which may follow the EPA Conservation Verification Protocol) verifying the figures to the satisfaction of the Administrator.

(B) Notwithstanding paragraph (c)(2)(i)(A) of this section, where two or more opt-in sources, or two or more opt-in sources and Phase I units include in the confirmation report under paragraph (c)(2) of this section or § 72.91(b) of this chapter the verified kilowatt hour savings or steam savings defined under paragraph (c)(2)(i)(A) of this section, for the calendar year, from the same specific measures:

(1) The designated representatives of all such opt-in sources and Phase I units shall submit with their confirmation reports a certification signed by all such designated representatives. The certification shall apportion the total kilowatt hour savings or steam savings as defined under paragraph (c)(2)(i)(A) of this section for the calendar year among such opt-in sources.

(2) Each designated representative shall include in the opt-in source's confirmation report only its share of the verified reduction in heat input as defined under paragraph (c)(2)(i)(A) of this section for the calendar year under the certification under paragraph (c)(2)(ii)(B)(1) of this section.

(iii) *Determination of reduced utilization based on confirmation report.* (A) If an opt-in source must submit a confirmation report as specified under paragraph (c)(2) of this section, the Administrator, upon such submittal, will adjust his or her determination of reduced utilization for the calendar year for the opt-in source. Such adjustment will include the recalculation of both annual utilization and average utilization, using verified reduction in heat input as defined under paragraph (c)(2)(i)(A) of this section for the calendar year instead of the previously estimated values.

(B) *Estimates confirmed.* If the total, included in the confirmation report, of the amounts of verified reduction in the opt-in source's heat input equals the total estimated in the opt-in source's annual compliance certification report for the calendar year, then the designated representative shall include in the confirmation report a statement indicating that is true.

(C) *Underestimate.* If the total, included in the confirmation report, of the amounts of verified reduction in the opt-in source's heat input is greater than the total estimated in the opt-in source's annual compliance certification report for the calendar year, then the designated representative shall include in the confirmation report the number of allowances to be credited to the opt-in source's compliance subaccount calculated using the following formula:

Allowances credited for the calendar year in which the reduced utilization occurred=

$$\text{Number of allowances allocated for the calendar year} \times \left[\frac{\text{Average utilization}_{\text{Verified}} - \text{Average utilization}_{\text{Estimate}}}{\text{baseline}}\right]$$

where,

Average $\text{Utilization}_{\text{estimate}}$=

the average utilization of the opt-in source as defined under paragraph (a)(2) of this section, calculated using the estimated reduction in the opt-in source's heat input under (a)(1) of this section, and submitted in the annual compliance certification report for the calendar year.

Average $\text{Utilization}_{\text{verified}}$=

the average utilization of the opt-in source as defined under paragraph (a)(2) of this section, calculated using the verified reduction in the opt-in source's heat input as submitted under paragraph (c)(2)(i)(A) of this section by the designated representative in the confirmation report.

(D) *Overestimate.* If the total of the amounts of verified reduction in the opt-in source's heat input included in the confirmation report is less than the total estimated in the opt-in source's annual compliance certification report for the calendar year, then the designated representative shall include in the confirmation report the number of allowances to be deducted from the opt-in source's compliance subaccount, which equals the absolute value of the

result of the formula for allowances credited under paragraph (c)(2)(iii)(C) of this section.

(E) *Adjusted allowances remaining.* Unless paragraph (c)(2)(iii)(B) of this section applies, the designated representative shall include in the confirmation report the adjusted amount of allowances that would have been held in the opt-in source's compliance subaccount if the deductions made under § 73.35(b) of this chapter had been based on the verified, rather than the estimated, reduction in the opt-in source's heat input, calculated as follows:

$$\text{Adjusted amount of allowances} = \begin{array}{c}\text{Allowances held after deduction} - \text{Excess emissions} \\ + \text{Allowances credited} - \text{Allowances deducted}\end{array}$$

where:

''Allowances held after deduction'' shall be the amount of allowances held in the opt-in source's compliance subaccount after deduction of allowances was made under § 73.35(b) of this chapter based on the annual compliance certification report.

''Excess emissions'' shall be the amount (if any) of excess emissions determined under § 73.35(d) for the calendar year based on the annual compliance certification report. ''Allowances credited'' shall be the amount of allowances calculated under paragraph (c)(2)(iii)(C) of this section.

''Allowances deducted'' shall be the amount of allowances calculated under paragraph (c)(2)(iii)(D) of this section.

(1) If the result of the formula for ''adjusted amount of allowances'' is negative, the absolute value of the result constitutes excess emissions of sulfur dioxide. If the result is positive, there are no excess emissions of sulfur dioxide.

(2) If the amount of excess emissions of sulfur dioxide calculated under ''adjusted amount of allowances'' differs from the amount of excess emissions of sulfur dioxide determined under § 73.35 of this chapter based on the annual compliance certification report, then the designated representative shall include in the confirmation report a demonstration of:

(i) The number of allowances that should be deducted to offset any increase in excess emissions or returned to the account for any decrease in excess emissions; and

(ii) The amount of the excess emissions penalty (excluding interest) that should be paid or returned to the account for the change in excess emissions.

(3) The Administrator will deduct immediately from the opt-in source's compliance subaccount the amount of allowances necessary to offset any increase in excess emissions or will return immediately to the opt-in source's compliance subaccount the amount of allowances that he or she determines is necessary to account for any decrease in excess emissions.

(4) The designated representative may identify the serial numbers of the allowances to be deducted or returned. In the absence of such identification, the deduction will be on a first-in, first-out basis under § 73.35(c)(2) of this chapter and the identification of allowances returned will be at the Administrator's discretion.

(5) If the designated representative of an opt-in source fails to submit on a timely basis a confirmation report, in accordance with paragraph (c)(2) of this section, with regard to the estimate of reductions in heat input as defined under paragraph (c)(2)(i)(A) of this section, then the Administrator will reject such estimate and correct it to equal zero in the opt-in source's annual compliance certification report that includes that estimate. The Administrator will deduct immediately, on a first-in, first-out basis under § 73.35(c)(2) of this chapter, the amount of allowances that he or she determines is necessary to offset any increase in excess emissions of sulfur dioxide that results from the correction and will require the owners and operators of the opt-in source to pay an excess emission penalty in accordance with part 77 of this chapter.

(F) If the opt-in source is governed by an approved thermal energy plan under § 74.47 and if the opt-in source must submit a confirmation report as specified under paragraph (c)(2) of this section, the adjusted amount of allowances that should remain in the opt-in source's compliance subaccount shall be calculated as follows:

Adjusted amount of allowances =

$$= \text{allowances allocated} - \text{tons emitted} - \text{the larger of} \begin{pmatrix} \text{allowances transferred} \\ \text{to all replacement units} \\ \text{or} \\ \text{allowances deducted} \\ \text{for reduced utilization} \end{pmatrix}$$

where,

''Allowances allocated'' shall be the original number of allowances allocated under section § 74.40 for the calendar year.

''Tons emitted'' shall be the total tons of sulfur dioxide emitted by the opt-in source during the calendar year, as reported in accordance with subpart F of this part for combustion sources.

''Allowances transferred to all replacement units'' shall be the sum of allowances transferred to all replacement units under an approved thermal energy plan in accordance with § 74.47 and adjusted by the Administrator in accordance with § 74.47(d)(2).

''Allowances deducted for reduced utilization'' shall be the total number of allowances deducted for reduced utilization as calculated in accordance with this section including any adjustments required under paragraph (c)(iii)(E) of this section.

§ 74.45 Reduced utilization for process sources. [Reserved]

§ 74.46 Opt-in source permanent shutdown, reconstruction, or change in affected status.

(a) *Notification*. (1) When an opt-in source has permanently shutdown during the calendar year, the designated representative shall notify the Administrator of the date of shutdown, within 30 days of such shutdown.

(2) When an opt-in source has undergone a modification that qualifies as a reconstruction as defined in § 60.15 of this chapter, the designated representative shall notify the Administrator of the date of completion of the reconstruction, within 30 days of such completion.

(3) When an opt-in source becomes an affected unit under § 72.6 of this chapter, the designated representative shall notify the Administrator of such change in the opt-in source's affected status within 30 days of such change.

(b) *Administrator's action*. (1) The Administrator will terminate the opt-in source's opt-in permit and deduct allowances as provided below in the following circumstances:

(i) When an opt-in source has permanently shutdown. The Administrator shall deduct allowances equal in number to and with the same or earlier compliance use date as those allocated to the opt-in source under § 74.40 for the calendar year in which the shut down occurs and for all future years following the year in which the shut down occurs; or

(ii) When an opt-in source has undergone a modification that qualifies as a reconstruction as defined in § 60.15 of this chapter. The Administrator shall deduct allowances equal in number to and with the same or earlier compliance use date as those allocated to the opt-in source under § 74.40 for the calendar year in which the reconstruction is completed and all future years following the year in which the reconstruction is completed; or

(iii) When an opt-in source becomes an affected unit under § 72.6 of this chapter. The Administrator shall deduct allowances equal in number to and with the same or earlier compliance use date as those allocated to the opt-in source under § 74.40 for the calendar year in which the opt-in source becomes affected under § 72.6 of this chapter and all future years following the calendar year in which the opt-in source becomes affected under § 72.6; or

(iv) When an opt-in source does not renew its opt-in permit. The Administrator shall deduct allowances equal in number to and with the same or earlier compliance use date as those allocated to the opt-in source under §74.40 for the calendar year in which the opt-in source's opt-in permit expires and all future years following the year in which the opt-in source's opt-in permit expires.

(2) After the allowance deductions under paragraph (b)(1) of this section are made, the Administrator will close the opt-in source's unit account in the Allowance Tracking System. If any allowances remain in the opt-in source's unit account after allowance deductions are made under paragraph (b)(1) of this section, and any deductions made under part 77 of this chapter, the Administrator will establish a general account for the opt-in source, and transfer any remaining allowances into this general account. The designated representative for the opt-in source shall become the authorized account representative for the general account.

§74.47 Transfer of allowances from the replacement of thermal energy—combustion sources.

(a) *Thermal energy plan*—(1) *General provisions.* The designated representative of an opt-in source that seeks to qualify for the transfer of allowances based on the replacement of thermal energy by a replacement unit shall submit a thermal energy plan subject to the requirements of §72.40(b) of this chapter for multi-unit compliance options and this section. The effective period of the thermal energy plan shall begin from January 1 of the first full calendar year for which the plan is approved and end December 31 of the last full calendar year for which the opt-in permit containing the plan is in effect.

(2) *Applicability.* This section shall apply to any designated representative of an opt-in source and any designated representative of each replacement unit seeking to transfer allowances based on the replacement of thermal energy.

(3) *Contents.* Each thermal energy plan shall contain the following elements in a format prescribed by the Administrator:

(i) The calendar year that the thermal energy plan takes effect, which shall be the first year the replacement unit(s) will replace thermal energy of the opt-in source;

(ii) The name, authorized account representative identification number, and telephone number of the designated representative of the opt-in source;

(iii) The name, authorized account representative identification number, and telephone number of the designated representative of each replacement unit;

(iv) The opt-in source's account identification number in the Allowance Tracking System;

(v) Each replacement unit's account identification number in the Allowance Tracking System (ATS);

(vi) The type of fuel used by each replacement unit;

(vii) The allowable SO_2 emissions rate, expressed in lbs/mmBtu, of each replacement unit for the calendar year for which the plan will take effect. When a thermal energy plan is renewed in accordance with paragraph (a)(9) of this section, the allowable SO_2 emission rate at each replacement unit will be the most stringent federally enforceable allowable SO_2 emissions rate applicable at the time of renewal for the calendar year for which the renewal will take effect. This rate will not be annualized;

(viii) The estimated amount of total thermal energy to be reduced at the opt-in source, including all energy flows (steam, gas, or hot water) used for any process or in any heating or cooling application;

(ix) The estimated total thermal energy at each replacement unit for the year prior to the year for which the plan is to take effect, including all energy flows (steam, gas, or hot water) used for any process or in any heating or cooling application;

(x) The estimated amount of total thermal energy at each replacement unit after replacing thermal energy at the opt-in source, including all energy flows (steam, gas, or hot water) used for any process or in any heating or cooling application;

(xi) The estimated amount of thermal energy at each replacement unit,

including all energy flows (steam, gas, or hot water) used for any process or in any heating or cooling application, replacing the thermal energy at the opt-in source;

(xii) Estimated total annual fuel input at each replacement unit after replacing thermal energy at the opt-in source;

(xiii) The number of allowances calculated under paragraph (b) of this section that the opt-in source will transfer to each replacement unit represented in the thermal energy plan.

(xiv) The estimated number of allowances to be deducted for reduced utilization under § 74.44;

(xv) Certification that each replacement unit has entered into a legally binding steam sales agreement to provide the thermal energy, as calculated under paragraph (a)(3)(xi) of this section, that it is replacing for the opt-in source. The designated representative of each replacement unit shall maintain and make available to the Administrator, at the Administrator's request, copies of documents demonstrating that the replacement unit is replacing the thermal energy at the opt-in source.

(4) *Submission.* The designated representative of the opt-in source seeking to qualify for the transfer of allowances based on the replacement of thermal energy shall submit a thermal energy plan to the permitting authority by no later than July 1 of the calendar year prior to the first calendar year for which the plan is to be in effect. The thermal energy plan shall be signed and certified by the designated representative of the opt-in source and each replacement unit covered by the plan.

(5) *Retirement of opt-in source upon enactment of plan.* (i) If the opt-in source will be permanently retired as of the effective date of the thermal energy plan, the opt-in source shall not be required to monitor its emissions upon retirement, consistent with § 75.67 of this chapter, provided that the following requirements are met:

(A) The designated representative of the opt-in source shall include in the plan a request for an exemption from the requirements of part 75 in accordance with § 75.67 of this chapter and shall submit the following statement: ''I certify that the opt-in source (''is'' or ''will be'', as applicable) permanently retired on the date specified in this plan and will not emit any sulfur dioxide or nitrogen oxides after such date.''

(B) The opt-in source shall not emit any sulfur dioxide or nitrogen oxides after the date specified in the plan.

(ii) Notwithstanding the monitoring exemption discussed in paragraph (a)(5)(i) of this section, the designated representative for the opt-in source shall submit the annual compliance certification report provided under paragraph (d) of this section.

(6) *Administrator's action.* If the permitting authority approves a thermal energy plan, the Administrator will annually transfer allowances to the Allowance Tracking System account of each replacement unit, as provided in the approved plan.

(7) *Incorporation, modification and renewal of a thermal energy plan.* (i) An approved thermal energy plan, including any revised or renewed plan that is approved, shall be incorporated into both the opt-in permit for the opt-in source and the Acid Rain permit for each replacement unit governed by the plan. Upon approval, the thermal energy plan shall be incorporated into the Acid Rain permit for each replacement unit pursuant to the requirements for administrative permit amendments under § 72.83 of this chapter.

(ii) In order to revise an opt-in permit to add an approved thermal energy plan or to change an approved thermal energy plan, the designated representative of the opt-in source shall submit a plan or a revised plan under paragraph (a)(4) of this section and meet the requirements for permit revisions under § 72.80 and either § 72.81 or § 72.82 of this chapter.

(8) *Termination of plan.* (i) A thermal energy plan shall be in effect until the earlier of the expiration of the opt-in permit for the opt-in source or the year for which a termination of the plan takes effect under paragraph (a)(8)(ii) of this section.

(ii) *Termination of plan by opt-in source and replacement units.* A notification to terminate a thermal energy

plan in accordance with § 72.40(d) of this chapter shall be submitted no later than December 1 of the calendar year for which the termination is to take effect.

(iii) If the requirements of paragraph (a)(8)(ii) of this section are met and upon revision of the opt-in permit of the opt-in source and the Acid Rain permit of each replacement unit governed by the thermal energy plan to terminate the plan pursuant to § 72.83 of this chapter, the Administrator will adjust the allowances for the opt-in source and the replacement units to reflect the transfer back to the opt-in source of the allowances transferred from the opt-in source under the plan for the year for which the termination of the plan takes effect.

(9) *Renewal of thermal energy plan.* The designated representative of an opt-in source may renew the thermal energy plan as part of its opt-in permit renewal in accordance with § 74.19.

(b) *Calculation of transferable allowances*—(1) *Qualifying thermal energy.* The amount of thermal energy credited towards the transfer of allowances based on the replacement of thermal energy shall equal the qualifying thermal energy and shall be calculated for each replacement unit as follows:

$$\text{Qualifying thermal energy} = \begin{array}{c}\text{the estimated thermal energy}\\ \text{at the replacement unit}\\ \text{under paragraph (a)(3)(xi) of this section}\end{array}$$

(2) *Fuel associated with qualifying thermal energy.* The fuel associated with the qualifying thermal energy at each replacement unit shall be calculated as follows:

$$\begin{array}{c}\text{Fuel associated with}\\ \text{Qualifying thermal energy}\end{array} = \frac{\text{Qualifying thermal energy}}{\text{Efficiency constant}}$$

where,

''Qualifying thermal energy'' for the replacement unit is as defined in paragraph (b)(1) of this section;

''Efficiency constant'' for the replacement unit

= 0.85, where the replacement unit is a boiler

= 0.80, where the replacement unit is a cogenerator

(3) *Allowances transferable from the opt-in source to each replacement unit.* The number of allowances transferable from the opt-in source to each replacement unit for the replacement of thermal energy is calculated as follows:

$$\begin{array}{c}\text{transferable allowances}\\ \text{for the replacement unit}\end{array} = \frac{\begin{array}{c}\text{Fuel Associated with}\\ \text{Qualifying thermal energy}\end{array} \times \begin{array}{c}\text{allowable } SO_2 \text{ emission rate}_{\text{replacement unit}}\\ \text{(in lb/mmBtu)}\end{array}}{2000}$$

where,

''Allowable SO_2 emission rate'' for the replacement unit is as defined in paragraph (a)(3)(vii) of this section;

''Fuel associated with qualifying thermal energy'' is as defined in paragraph (b)(2) of this section;

(c) *Transfer prohibition.* The allowances transferred from the opt-in source to each replacement unit shall not be transferred from the unit account of the replacement unit to any other account in the Allowance Tracking System.

(d) *Compliance*—(1) *Annual compliance certification report.* (i) As required for all opt-in sources, the designated representative of the opt-in source covered by a thermal energy plan must submit an opt-in utilization report for the calendar year as part of its annual compliance certification report under § 74.44(c)(1).

(ii) The designated representative of an opt-in source must submit a thermal energy compliance report for the calendar year as part of the annual compliance certification report, which must include the following elements in a format prescribed by the Administrator:

(A) The name, authorized account representative identification number, and telephone number of the designated representative of the opt-in source;

(B) The name, authorized account representative identification number, and telephone number of the designated representative of each replacement unit;

(C) The opt-in source's account identification number in the Allowance Tracking System (ATS);

(D) The account identification number in the Allowance Tracking System (ATS) for each replacement unit;

(E) The actual amount of total thermal energy reduced at the opt-in source during the calendar year, including all energy flows (steam, gas, or hot water) used for any process or in any heating or cooling application;

(F) The actual amount of thermal energy at each replacement unit, including all energy flows (steam, gas, or hot water) used for any process or in any heating or cooling application, replacing the thermal energy at the opt-in source;

(G) The actual amount of total thermal energy at each replacement unit after replacing thermal energy at the opt-in source, including all energy flows (steam, gas, or hot water) used for any process or in any heating or cooling application;

(H) Actual total fuel input at each replacement unit as determined in accordance with part 75 of this chapter;

(I) Calculations of allowance adjustments to be performed by the Administrator in accordance with paragraph (d)(2) of this section.

(2) *Allowance adjustments by Administrator.* (i) The Administrator will adjust the number of allowances in the Allowance Tracking System accounts for the opt-in source and for each replacement unit to reflect any changes between the estimated values submitted in the thermal energy plan pursuant to paragraph (a) of this section and the actual values submitted in the thermal energy compliance report pursuant to paragraph (d) of this section. The values to be considered for this adjustment include:

(A) The number of allowances transferable by the opt-in source to each replacement unit, calculated in paragraph (b) of this section using the actual, rather than estimated, thermal energy at the replacement unit replacing thermal energy at the opt-in source.

(B) The number of allowances deducted from the Allowance Tracking System account of the opt-in source, calculated under § 74.44(b)(2).

(ii) If the opt-in source includes in the opt-in utilization report under § 74.44 estimates for reductions in heat input, then the Administrator will adjust the number of allowances in the Allowance Tracking System accounts for the opt-in source and for each replacement unit to reflect any differences between the estimated values submitted in the opt-in utilization report and the actual values submitted in the confirmation report pursuant to § 74.44(c)(2).

(3) *Liability.* The owners and operators of an opt-in source or a replacement unit governed by an approved thermal energy plan shall be liable for any violation of the plan or this section at that opt-in source or replacement unit that is governed by the thermal energy plan, including liability for fulfilling the obligations specified in part 77 of this chapter and section 411 of the Act.

§74.48 Transfer of allowances from the replacement of thermal energy—process sources. [Reserved]

§74.49 Calculation for deducting allowances.

(a) *Allowance deduction formula.* The following formula shall be used to determine the total number of allowances to be deducted for the calendar year from the allowances held in an opt-in source's compliance subaccount as of the allowance transfer deadline applicable to that year:

Total allowances deducted = Tons emitted + Allowances deducted for reduced utilization where:

(1)(i) Except as provided in paragraph (a)(1)(ii) of this section, ''Tons emitted'' shall be the total tons of sulfur dioxide emitted by the opt-in source during the calendar year, as reported in accordance with subpart F of this part for combustion sources or subpart G of this part for process sources.

(ii) If the effective date of the opt-in source's permit took effect on a date other than January 1, ''Tons emitted'' for the first calendar year shall be the total tons of sulfur dioxide emitted by the opt-in source during the calendar quarters for which the opt-in source's opt-in permit is effective, as reported in accordance with subpart F of this part for combustion sources or subpart G of this part for process sources.

(2) ''Allowances deducted for reduced utilization'' shall be the total number of allowances deducted for reduced utilization as calculated in accordance with §74.44 for combustion sources or §74.45 for process sources.

§74.50 Deducting opt-in source allowances from ATS accounts.

(a) *Deduction of allowances.* The Administrator may deduct any allowances that were allocated to an opt-in source under §74.40 by removing, from any Allowance Tracking System accounts in which they are held, the allowances in an amount specified in paragraph (d) of this section, under the following circumstances:

(1) When the opt-in source has permanently shut down; or

(2) When the opt-in source has been reconstructed; or

(3) When the opt-in source becomes an affected unit under §72.6 of this chapter; or

(4) When the opt-in source fails to renew its opt-in permit.

(b) *Method of deduction.* The Administrator will deduct allowances beginning with those allowances with the latest recorded date of transfer out of the opt-in source's unit account.

(c) *Notification of deduction.* When allowances are deducted, the Administrator will send a written notification to the authorized account representative of each Allowance Tracking System account from which allowances were deducted. The notification will state:

(1) The serial numbers of all allowances deducted from the account,

(2) The reason for deducting the allowances, and

(3) The date of deduction of the allowances.

(d) *Amount of deduction.* The Administrator may deduct allowances in accordance with paragraph (a) of this section in an amount required to offset any excess emissions in accordance with part 77 of this chapter and when an opt-in source does not hold allowances equal in number to and with the same or earlier compliance use date for the calendar years specified under §74.46(b)(1) (i) through (iv) in an amount required to be deducted under §74.46(b)(1) (i) through (iv).

Subpart F—Monitoring Emissions: Combustion Sources

§74.60 Monitoring requirements.

(a) *Monitoring requirements for combustion sources.* The owner or operator of each combustion source shall meet all of the requirements specified in part 75 of this chapter for the owners and operators of an affected unit to install, certify, operate, and maintain a continuous emission monitoring system, an excepted monitoring system, or an approved alternative monitoring system in accordance with part 75 of this chapter.

(b) *Monitoring requirements for opt-in sources.* The owner or operator of each opt-in source shall install, certify, operate, and maintain a continuous emission monitoring system, an excepted

monitoring system, an approved alternative monitoring system in accordance with part 75 of this chapter.

§ 74.61 Monitoring plan.

(a) *Monitoring plan.* The designated representative of a combustion source shall meet all of the requirements specified under part 75 of this chapter for a designated representative of an affected unit to submit to the Administrator a monitoring plan that includes the information required in a monitoring plan under § 75.53 of this chapter. This monitoring plan shall be submitted as part of the combustion source's opt-in permit application under § 74.14 of this part.

(b) [Reserved]

Subpart G—Monitoring Emissions: Process Sources [Reserved]

PART 75—CONTINUOUS EMISSION MONITORING

Subpart A—General

Sec.
75.1 Purpose and scope.
75.2 Applicability.
75.3 General Acid Rain Program provisions.
75.4 Compliance dates.
75.5 Prohibitions.
75.6 Incorporation by reference.
75.7 EPA Study.
75.8 Relative accuracy and availability analysis.

Subpart B—Monitoring Provisions

75.10 General operating requirements.
75.11 Specific provisions for monitoring SO_2 emissions (SO_2 and flow monitors).
75.12 Specific provisions for monitoring NO_x emissions (NO_x and diluent gas monitors).
75.13 Specific provisions for monitoring CO_2 emissions.
75.14 Specific provisions for monitoring opacity.
75.15 Specific provisions for monitoring SO_2 emissions removal by qualifying Phase I technology.
75.16 Special provisions for monitoring emissions from common by-pass, and multiple stacks for SO_2 emissions and heat input determinations.
75.17 Specific provisions for monitoring emissions from common, by-pass, and multiple stacks for NO_x emission rate.
75.18 Specific provisions for monitoring emissions from common and by-pass stacks for opacity.

Subpart C—Operation and Maintenance Requirements

75.20 Certification and recertification procedures.
75.21 Quality assurance and quality control requirements.
75.22 Reference test methods.
75.23 Alternatives to standards incorporated by reference.
75.24 Out-of-control periods.

Subpart D—Missing Data Substitution Procedures

75.30 General provisions.
75.31 Initial missing data procedures.
75.32 Determination of monitor data availability for standard missing data procedures.
75.33 Standard missing data procedures.
75.34 Units with add-on emission controls.
75.35 Missing data procedures for CO_2 data.
75.36 Missing data procedures for heat input.

Subpart E—Alternative Monitoring Systems

75.40 General demonstration requirements.
75.41 Precision criteria.
75.42 Reliability criteria.
75.43 Accessibility criteria.
75.44 Timeliness criteria.
75.45 Daily quality assurance criteria.
75.46 Missing data substitution criteria.
75.47 Criteria for a class of affected units.
75.48 Petition for an alternative monitoring system.

Subpart F—Recordkeeping Requirements

75.50 General recordkeeping provisions.
75.51 General recordkeeping provisions for specific situations.
75.52 Certification, quality assurance and quality control record provisions.
75.53 Monitoring plan.
75.54 General recordkeeping provisions.
75.55 General recordkeeping provisions for specific situations.
75.56 Certification, quality assurance and quality control record provisions.

Subpart G—Reporting Requirements

75.60 General provisions.
75.61 Notifications.
75.62 Monitoring plan.
75.63 Initial certification or recertification application.
75.64 Quarterly reports.
75.65 Opacity reports.
75.66 Petitions to the Administrator.
75.67 Retired units petitions.

APPENDIX A TO PART 75—SPECIFICATIONS AND TEST PROCEDURES
APPENDIX B TO PART 75—QUALITY ASSURANCE AND QUALITY CONTROL PROCEDURES
APPENDIX C TO PART 75—MISSING DATA ESTIMATION PROCEDURES
APPENDIX D TO PART 75—OPTIONAL SO_2 EMISSIONS DATA PROTOCOL FOR GAS-FIRED AND OIL-FIRED UNITS
APPENDIX E TO PART 75—OPTIONAL NO_x EMISSIONS ESTIMATION PROTOCOL FOR GAS-FIRED PEAKING UNITS AND OIL-FIRED PEAKING UNITS
APPENDIX F TO PART 75—CONVERSION PROCEDURES
APPENDIX G TO PART 75—DETERMINATION OF CO_2 EMISSIONS
APPENDIX H TO PART 75—REVISED TRACEABILITY PROTOCOL NO. 1
APPENDIX I TO PART 75—OPTIONAL F—FACTOR/FUEL FLOW METHOD [RESERVED]
APPENDIX J TO PART 75—COMPLIANCE DATES FOR REVISED RECORDKEEPING REQUIREMENTS AND MISSING DATA PROCEDURES

AUTHORITY: 42 U.S.C. 7601 and 7651k.

SOURCE: 58 FR 3701, Jan. 11, 1993, unless otherwise noted.

Subpart A—General

§ 75.1 Purpose and scope.

(a) *Purpose.* The purpose of this part is to establish requirements for the monitoring, recordkeeping, and reporting of sulfur dioxide, nitrogen oxides, and carbon dioxide emissions, volumetric flow, and opacity data from affected units under the Acid Rain Program pursuant to sections 412 and 821 of the Clean Air Act, 42 U.S.C. 7401–7671q as amended by Public Law 101–549 (November 15, 1990) (the Act).

(b) *Scope.* (1) The regulations established under this part include general requirements for the installation, certification, operation, and maintenance of continuous emission or opacity monitoring systems and specific requirements for the monitoring of SO_2 emissions, volumetric flow, NO_x emissions, opacity, CO_2 emissions and SO_2 emissions removal by qualifying Phase I technologies. Specifications for the installation and performance of continuous emission monitoring systems, certification tests and procedures, and quality assurance tests and procedures are included in appendices A and B to this part. Criteria for alternative monitoring systems and provisions to account for missing data from certified continuous emission monitoring systems or approved alternative monitoring systems are also included in the regulation.

(2) Statistical estimation procedures for missing data are included in appendix C to this part. Optional protocols for estimating SO_2 mass emissions from gas-fired or oil-fired units and NO_x emissions from gas-fired peaking or oil-fired peaking units are included in appendices D and E, respectively, to this part. Requirements for recording and recordkeeping of monitoring data and for quarterly electronic reporting also are specified. Procedures for conversion of monitoring data into units of the standard are included in appendix F to this part. Procedures for the monitoring and calculation of CO_2 emissions are included in appendix G of this part.

[58 FR 3701, Jan. 11, 1993; 58 FR 34126, June 23, 1993; 58 FR 40747, July 30, 1993]

§ 75.2 Applicability.

(a) Except as provided in paragraph (b) of this section, the provisions of this part apply to each affected unit subject to Acid Rain emission limitations or reduction requirements for SO_2 or NO_x.

(b) The provisions of this part do not apply to:

(1) A new unit for which a written exemption has been issued under § 72.7 of this chapter (any new unit that serves one or more generators with total nameplate capacity of 25 MWe or less and burns only fuels with a sulfur content of 0.05 percent or less by weight may apply to the Administrator for an exemption); or

(2) Any unit not subject to the requirements of the Acid Rain Program due to operation of any paragraph of § 72.6(b) of this chapter; or

(3) An affected unit for which a written exemption has been issued under § 72.8 of this chapter and an exception granted under § 75.67 of this part.

[58 FR 3701, Jan. 11, 1993, as amended at 58 FR 15716, Mar. 23, 1993; 60 FR 26516, May 17, 1995]

§ 75.3 General Acid Rain Program provisions.

The provisions of part 72, including the following, shall apply to this part:

(a) § 72.2 (Definitions);

(b) § 72.3 (Measurements, Abbreviations, and Acronyms);

(c) § 72.4 (Federal Authority);

(d) § 72.5 (State Authority);

(e) § 72.6 (Applicability);

(f) § 72.7 (New Unit Exemption);

(g) § 72.8 (Retired Units Exemption);

(h) § 72.9 (Standard Requirements);

(i) § 72.10 (Availability of Information); and

(j) § 72.11 (Computation of Time).

In addition, the procedures for appeals of decisions of the Administrator under this part are contained in part 78 of this chapter.

§ 75.4 Compliance dates.

(a) The provisions of this part apply to each existing Phase I and Phase II unit on February 10, 1993. For substitution or compensating units that are so designated under the acid rain permit which governs the unit and contains the approved substitution or reduced utilization plan, pursuant to § 72.41 or § 72.43 of this chapter, the provisions of this part become applicable upon the issuance date of the acid rain permit. For combustion sources seeking to enter the Opt-in Program in accordance with part 74 of this chapter, the provisions of this part become applicable upon the submission of an opt-in permit application in accordance with § 74.14 of this chapter. In accordance with § 75.20, the owner or operator of each existing affected unit shall ensure that all monitoring systems required by this part for monitoring SO_2, NO_X, CO_2, opacity, and volumetric flow are installed and all certification tests are completed not later than the following dates (except as provided in paragraphs (d) through (h) of this section):

(1) For a unit listed in Table 1 of § 73.10(a) of this chapter, November 15, 1993.

(2) For a substitution or a compensating unit that is designated under an approved substitution plan or reduced utilization plan pursuant to § 72.41 or § 72.43 of this chapter, or for a unit that is designated an early election unit under an approved NO_X compliance plan pursuant to part 76 of this chapter, that is not conditionally approved and that is effective for 1995, the earlier of the following dates:

(i) January 1, 1995; or

(ii) 90 days after the issuance date of the Acid Rain permit (or date of approval of permit revision) that governs the unit and contains the approved substitution plan, reduced utilization plan, or NO_X compliance plan.

(3) For either a Phase II unit, other than a gas-fired unit or an oil-fired unit, or a substitution or compensating unit that is not a substitution or compensating unit under paragraph (a)(2) of this section: January 1, 1995.

(4) For a gas-fired Phase II unit or an oil-fired Phase II unit, January 1, 1995, except that installation and certification tests for continuous emission monitoring systems for NO_X and CO_2 or excepted monitoring systems for NO_X under appendix E or CO_2 estimation under appendix G of this part shall be completed as follows:

(i) For an oil-fired Phase II unit or a gas-fired Phase II unit located in an ozone nonattainment area or the ozone transport region, not later than July 1, 1995; or

(ii) For an oil-fired Phase II unit or a gas-fired Phase II unit not located in an ozone nonattainment area or the ozone transport region, not later than January 1, 1996.

(5) For combustion sources seeking to enter the Opt-in Program in accordance with part 74 of this chapter, the expiration date of a combustion source's opt-in permit under § 74.14(e) of this chapter.

(b) In accordance with § 75.20, the owner or operator of each new affected unit shall ensure that all monitoring systems required under this part for monitoring of SO_2, NO_X, CO_2, opacity, and volumetric flow are installed and all certification tests are completed on or before the later of the following dates:

(1) January 1, 1995, except that for a gas-fired unit or oil-fired unit located in an ozone nonattainment area or the ozone transport region, the date for installation and completion of all certification tests for NO_X and CO_2 monitoring systems shall be July 1, 1995 and for a gas-fired unit or an oil-fired unit not located in an ozone nonattainment area or the ozone transport region, the

date for installation and completion of all certification tests for NO_X and CO_2 monitoring systems shall be January 1, 1996; or

(2) Not later than 90 days after the date the unit commences commercial operation, notice of which date shall be provided under subpart G of this part.

(c) In accordance with § 75.20, the owner or operator of any unit affected under any paragraph of § 72.6(a)(3) (ii) through (vii) of this chapter shall ensure that all monitoring systems required under this part for monitoring of SO_2, NO_X, CO_2, opacity, and volumetric flow are installed and all certification tests are completed on or before the later of the following dates:

(1) January 1, 1995, except that for a gas-fired unit or oil-fired unit located in an ozone nonattainment area or the ozone transport region, the date for installation and completion of all certification tests for NO_X and CO_2 monitoring systems shall be July 1, 1995 and for a gas-fired unit or an oil-fired unit not located in an ozone nonattainment area or the ozone transport region, the date for installation and completion of all certification tests for NO_X and CO_2 monitoring systems shall be January 1, 1996; or

(2) Not later than 90 days after the date the unit becomes subject to the requirements of the Acid Rain Program, notice of which date shall be provided under subpart G of this part.

(d) In accordance with § 75.20, the owner or operator of an existing unit that is shutdown and is not yet operating by the applicable dates listed in paragraph (a) of this section, shall ensure that all monitoring systems required under this part for monitoring of SO_2, NO_X, CO_2, opacity, and volumetric flow are installed and all certification tests are completed not later than the earlier of 45 unit operating days or 180 calendar days after the date that the unit recommences commercial operation of the affected unit, notice of which date shall be provided under subpart G of this part. The owner or operator shall determine and report SO_2 concentration, NO_X emission rate, CO_2 concentration, and flow data for all unit operating hours after the applicable compliance date in paragraph (a) of this section until all required certification tests are successfully completed using either:

(1) The maximum potential concentration of SO_2, the maximum potential NO_X emission rate, the maximum potential flow rate, as defined in section 2.1 of appendix A of this part, or the maximum CO_2 concentration used to determine the maximum potential concentration of SO_2 in section 2.1.1.1 of appendix A of this part; or

(2) Reference methods under § 75.22(b); or

(3) Another procedure approved by the Administrator pursuant to a petition under § 75.66.

(e) In accordance with § 75.20, if the owner or operator of an existing unit completes construction of a new stack, flue, or flue gas desulfurization system after the applicable deadline in paragraph (a) of this section, then the owner or operator shall ensure that all monitoring systems required under this part for monitoring SO_2, NO_X, CO_2, opacity, and volumetric flow are installed on the new stack or duct and all certification tests are completed not later than 90 calendar days after the date that emissions first exit to the atmosphere through the new stack, flue, or flue gas desulfurization system, notice of which date shall be provided under subpart G of this part. Until emissions first pass through the new stack, flue or flue gas desulfurization system, the unit is subject to the appropriate deadline in paragraph (a) of this section. The owner or operator shall determine and report SO_2 concentration, NO_X emission rate, CO_2 concentration, and flow data for all unit operating hours after emissions first pass through the new stack, flue, or flue gas desulfurization system until all required certification tests are successfully completed using either:

(1) The appropriate value for substitution of missing data upon recertification pursuant to § 75.20(b)(3); or

(2) Reference methods under § 75.22(b) of this part; or

(3) Another procedure approved by the Administrator pursuant to a petition under § 75.66.

(f) In accordance with § 75.20, the owner or operator of a gas-fired or oil-fired peaking unit, if planning to use appendix E of this part, shall ensure

that the required certification tests for excepted monitoring systems under appendix E are completed for backup fuel as defined in § 72.2 of this chapter by no later than the later of: 30 unit operating days after the date that the unit first combusted that backup fuel after the certification testing of the primary fuel; or The deadline in paragraph (a) of this section. The owner or operator shall determine and report NO_X emission rate data for all unit operating hours that the backup fuel is combusted after the applicable compliance date in paragraph (a) of this section until all required certification tests are successfully completed using either:

(1) The maximum potential NO_X emission rate; or

(2) Reference methods under § 75.22(b) of this part; or

(3) Another procedure approved by the Administrator pursuant to a petition under § 75.66.

(g) In accordance with § 75.20, whenever the owner or operator of a gas-fired or oil-fired unit uses an excepted monitoring system under appendix D or E of this part and combusts emergency fuel as defined in § 72.2 of this chapter, then the owner or operator shall ensure that a fuel flowmeter measuring emergency fuel is installed and the required certification tests for excepted monitoring systems are completed by no later than 30 unit operating days after the first date after January 1, 1995 that the unit combusts emergency fuel. For all unit operating hours that the unit combusts emergency fuel after January 1, 1995 until the owner or operator installs a flowmeter for emergency fuel and successfully completes all required certification tests, the owner or operator shall determine and report SO_2 mass emission data using either:

(1) The maximum potential fuel flow rate, as described in appendix D of this part, and the maximum sulfur content of the fuel, as described in section 2.1.1.1 of appendix A of this part;

(2) Reference methods under § 75.22(b) of this part; or

(3) Another procedure approved by the Administrator pursuant to a petition under § 75.66.

(h) In accordance with § 75.20, the owner or operator of a unit with a qualifying Phase I technology shall ensure that all certification tests for the inlet and outlet SO_2-diluent continuous emission monitoring systems are completed no later than January 1, 1997 if the unit with a qualifying Phase I technology requires the use of an inlet SO_2-diluent continuous emission monitoring system for the purpose of monitoring SO_2 emissions removal from January 1, 1997 through December 31, 1999.

[60 FR 17131, Apr. 4, 1995, as amended at 60 FR 26516, May 17, 1995]

§ 75.5 Prohibitions.

(a) A violation of any applicable regulation in this part by the owners or operators or the designated representative of an affected source or an affected unit is a violation of the Act.

(b) No owner or operator of an affected unit shall operate the unit without complying with the requirements of §§ 75.2 through 75.67 and appendices A through I of this part.

(c) No owner or operator of an affected unit shall use any alternative monitoring system, alternative reference method, or any other alternative for the required continuous emission monitoring system without having obtained the Administrator's prior written approval in accordance with §§ 75.23, 75.48 and 75.66.

(d) No owner or operator of an affected unit shall operate the unit so as to discharge, or allow to be discharged, emissions of SO_2, NO_x, or CO_2 to the atmosphere without accounting for all such emissions in accordance with the provisions of §§ 75.10 through 75.18.

(e) No owner or operator of an affected unit shall disrupt the continuous emission monitoring system, any portion thereof, or any other approved emission monitoring method, and thereby avoid monitoring and recording SO_2, NO_X, or CO_2 emissions discharged to the atmosphere, except for periods of recertification, or periods when calibration, quality assurance, or maintenance is performed pursuant to § 75.21 and appendix B of this part.

(f) No owner or operator of an affected unit shall retire or permanently

discontinue use of the continuous emission monitoring system, any component thereof, the continuous opacity monitoring system, or any other approved emission monitoring system under this part, except under any one of the following circumstances:

(1) During the period that the unit is covered by an approved retired unit exemption under § 72.8 of this chapter that is in effect; or

(2) The owner or operator is monitoring emissions from the unit with another certified monitoring system that provides emission data for the same pollutant or parameter as the retired or discontinued monitoring system; or

(3) The designated representative submits notification of the date of recertification testing of a replacement monitoring system in accordance with §§ 75.20 and 75.61, and the owner or operator recertifies thereafter a replacement monitoring system in accordance with § 75.20.

[58 FR 3701, Jan. 11, 1993, as amended at 58 FR 40747, July 30, 1993; 60 FR 26517, May 17, 1995]

§ 75.6 Incorporation by reference.

The materials listed in this section are incorporated by reference in the corresponding sections noted. These incorporations by reference were approved by the Director of the Federal Register in accordance with 5 U.S.C. 552(a) and 1 CFR part 51. These materials are incorporated as they existed on the date of approval, and a notice of any change in these materials will be published in the FEDERAL REGISTER. The materials are available for purchase at the corresponding address noted below and are available for inspection at the Office of the Federal Register, 800 North Capitol Street, NW, Suite 700, Washington, DC, at the Public Information Reference Unit of the U.S. EPA, 401 M Street, SW, Washington, DC and at the Library (MD–35), U.S. EPA, Research Triangle Park, North Carolina.

(a) The following materials are available for purchase from the following addresses: American Society for Testing and Material (ASTM), 1916 Race Street, Philadelphia, Pennsylvania 19103; and the University Microfilms International 300 North Zeeb Road, Ann Arbor, Michigan 48106.

(1) ASTM D129–91, Standard Test Method for Sulfur in Petroleum Products (General Bomb Method), for appendices A and D of this part.

(2) ASTM D240–87 (Reapproved 1991), Standard Test Method for Heat of Combustion of Liquid Hydrocarbon Fuels by Bomb Calorimeter, for appendices A, D and F of this part.

(3) ASTM D287–82 (Reapproved 1987), Standard Test Method for API Gravity of Crude Petroleum and Petroleum Products (Hydrometer Method), for appendix D of this part.

(4) ASTM D388–92, Standard Classification of Coals by Rank, incorporation by reference for appendix F of this part.

(5) ASTM D941–88, Standard Test Method for Density and Relative Density (Specific Gravity) of Liquids by Lipkin Bicapillary Pycnometer, for appendix D of this part.

(6) ASTM D1072–90, Standard Test Method for Total Sulfur in Fuel Gases, for appendix D of this part.

(7) ASTM D1217–91, Standard Test Method for Density and Relative Density (Specific Gravity) of Liquids by Bingham Pycnometer, for appendix D of this part.

(8) ASTM D1250–80 (Reapproved 1990), Standard Guide for Petroleum Measurement Tables, for appendix D of this part.

(9) ASTM D1298–85 (Reapproved 1990), Standard Practice for Density, Relative Density (Specific Gravity) or API Gravity of Crude Petroleum and Liquid Petroleum Products by Hydrometer Method, for appendix D of this part.

(10) ASTM D1480–91, Standard Test Method for Density and Relative Density (Specific Gravity) of Viscous Materials by Bingham Pycnometer, for appendix D of this part.

(11) ASTM D1481–91, Standard Test Method for Density and Relative Density (Specific Gravity) of Viscous Materials by Lipkin Bicapillary Pycnometer, for appendix D of this part.

(12) ASTM D1552–90, Standard Test Method for Sulfur in Petroleum Products (High Temperature Method), for appendices A and D of the part.

(13) ASTM D1826–88, Standard Test Method for Calorific (Heating) Value of

Gases in Natural Gas Range by Continuous Recording Calorimeter, for appendix F of this part.

(14) ASTM D1945–91, Standard Test Method for Analysis of Natural Gas by Gas Chromatography, for appendices F and G of this part.

(15) ASTM D1946–90, Standard Practice for Analysis of Reformed Gas by Gas Chromatography, for appendices F and G of this part.

(16) ASTM D1989–92, Standard Test Method for Gross Calorific Value of Coal and Coke by Microprocessor Controlled Isoperibol Calorimeters, for appendix F of this part.

(17) ASTM D2013–86, Standard Method of Preparing Coal Samples for Analysis, for § 75.15 and appendix F of this part.

(18) ASTM D2015–91, Standard Test Method for Gross Calorific Value of Coal and Coke by the Adiabatic Bomb Calorimeter, for § 75.15 and appendices A, D and F of this part.

(19) ASTM D2234–89, Standard Test Methods for Collection of a Gross Sample of Coal, for § 75.15 and appendix F of this part.

(20) ASTM D2382–88, Standard Test Method for Heat of Combustion of Hydrocarbon Fuels by Bomb Calorimeter (High-Precision Method), for appendices D and F of this part.

(21) ASTM D2502–87, Standard Test Method for Estimation of Molecular Weight (Relative Molecular Mass) of Petroleum Oils from Viscosity Measurements, for appendix G of this part.

(22) ASTM D2503–82 (Reapproved 1987), Standard Test Method for Molecular Weight (Relative Molecular Mass) of Hydrocarbons by Thermoelectric Measurement of Vapor Pressure, for appendix G of this part.

(23) ASTM D2622–92, Standard Test Method for Sulfur in Petroleum Products by X-Ray Spectrometry, for appendices A and D of this part.

(24) ASTM D3174–89, Standard Test Method for Ash in the Analysis Sample of Coal and Coke From Coal, for appendix G of this part.

(25) ASTM D3176–89, Standard Practice for Ultimate Analysis of Coal and Coke, for appendices A and F of this part.

(26) ASTM D3177–89, Standard Test Methods for Total Sulfur in the Analysis Sample of Coal and Coke, for § 75.15 and appendix A of this part.

(27) ASTM D3178–89, Standard Test Methods for Carbon and Hydrogen in the Analysis Sample of Coal and Coke, for appendix G of this part.

(28) ASTM D3238–90, Standard Test Method for Calculation of Carbon Distribution and Structural Group Analysis of Petroleum Oils by the n-d-M Method, for appendix G of this part.

(29) ASTM D3246–81 (Reapproved 1987), Standard Test Method for Sulfur in Petroleum Gas By Oxidative Microcoulometry, for appendix D of this part.

(30) ASTM D3286–91a, Standard Test Method for Gross Calorific Value of Coal and Coke by the Isoperibol Bomb Calorimeter, for appendix F of this part.

(31) ASTM D3588–91, Standard Practice for Calculating Heat Value, Compressibility Factor, and Relative Density (Specific Gravity) of Gaseous Fuels, for appendix F of this part.

(32) ASTM D4052–91, Standard Test Method for Density and Relative Density of Liquids by Digital Density Meter, for appendix D of this part.

(33) ASTM D4057–88, Standard Practice for Manual Sampling of Petroleum and Petroleum Products, for appendix D of this part.

(34) ASTM D4177–82 (Reapproved 1990), Standard Practice for Automatic Sampling of Petroleum and Petroleum Products, for appendix D of this part.

(35) ASTM D4239–85, Standard Test Methods for Sulfur in the Analysis Sample of Coal and Coke Using High Temperature Tube Furnace Combustion Methods, for § 75.15 and appendix A of this part.

(36) ASTM D4294–90, Standard Test Method for Sulfur in Petroleum Products by Energy-Dispersive X-Ray Fluorescence Spectroscopy, for appendices A and D of this part.

(37) ASTM D4468–85 (Reapproved 1989), Standard Test Method for Total Sulfur in Gaseous Fuels by Hydrogenolysis and Rateometric Colorimetry, for appendix D of this part.

(38) ASTM D4891–89, Standard Test Method for Heating Value of Gases in Natural Gas Range by Stoichiometric Combustion, for appendix F of this part.

(39) ASTM D5291–92, Standard Test Methods for Instrumental Determination of Carbon, Hydrogen, and Nitrogen in Petroleum Products and Lubricants, for appendix G of this part.

(40) ASTM D5504–94, Standard Test Method for Determination of Sulfur Compounds in Natural Gas and Gaseous Fuels by Gas Chromatography and Chemiluminescence, for appendix D of this part.

(b) The following materials are available for purchase from the American Society of Mechanical Engineers (ASME), 22 Law Drive, Box 2350, Farifield, NJ 07007–2350.

(1) ASME MFC–3M–1989 with September 1990 Errata, Measurement of Fluid Flow in Pipes Using Orifice, Nozzle, and Venturi, for § 75.20 and appendix D of this part.

(2) ASME MFC–4M–1986 (Reaffirmed 1990), Measurement of Gas Flow by Turbine Meters, for § 75.20 and appendix D of this part.

(3) ASME-MFC–5M–1985, Measurement of Liquid Flow in Closed Conduits Using Transit-Time Ultrasonic Flowmeters, for § 75.20 and appendix D of this part.

(4) ASME MFC–6M–1987 with June 1987 Errata, Measurement of Fluid Flow in Pipes Using Vortex Flow Meters, for § 75.20 and appendix D of this part.

(5) ASME MFC–7M–1987 (Reaffirmed 1992), Measurement of Gas Flow by Means of Critical Flow Venturi Nozzles, for § 75.20 and appendix D of this part.

(6) ASME MFC–9M–1988 with December 1989 Errata, Measurement of Liquid Flow in Closed Conduits by Weighing Method, for § 75.20 and appendix D of this part.

(c) The following materials are available for purchase from the American National Standards Institute (ANSI), 11 W. 42nd Street, New York NY 10036: ISO 8316: 1987(E) Measurement of Liquid Flow in Closed Conduits—Method by Collection of the Liquid in a Volumetric Tank, for § 75.20 and appendices D and E of this part.

(d) The following materials are available for purchase from the following address: Gas Processors Association (GPA), 6526 East 60th Street, Tulsa, Oklahoma 74145:

(1) GPA Standard 2172–86, Calculation of Gross Heating Value, Relative Density and Compressibility Factor for Natural Gas Mixtures from Compositional Analysis, for appendices D, E, and F of this part.

(2) GPA Standard 2261–90, Analysis for Natural Gas and Similar Gaseous Mixtures by Gas Chromatography, for appendices D, F, and G of this part.

(e) The following materials are available for purchase from the following address: American Gas Association, 1515 Wilson Boulevard, Arlington VA 22209: American Gas Association Report No. 3: Orifice Metering of Natural Gas and Other Related Hydrocarbon Fluids, Part 1: General Equations and Uncertainty Guidelines (October 1990 Edition), Part 2: Specification and Installation Requirements (February 1991 Edition) and Part 3: Natural Gas Applications (August 1992 Edition), for § 75.20 and appendices D and E of this part.

[58 FR 3701, Jan. 11, 1993, as amended at 60 FR 26517, May 17, 1995]

§ 75.7 EPA Study.

The Agency will initiate rulemaking to adjust the equations in the bias test by an amount sufficient to compensate for reference method variance based on a study, which EPA shall complete by October 31, 1993, unless the Administrator determines that adjustments are technically unnecessary or infeasible to properly determine bias.

[58 FR 3701, Jan. 11, 1993; 58 FR 40747, July 30, 1993]

§ 75.8 Relative accuracy and availability analysis.

(a) The Agency will conduct an analysis of monitoring data submitted to EPA under this part between November 15, 1993 and December 31, 1996 to evaluate the appropriateness of the current performance specifications for relative accuracy and availability trigger conditions for missing data substitution for SO_2 and CO_2 pollutant concentration monitors, flow monitors, and NO_X continuous emission monitoring systems.

(b) Prior to July 1, 1997, the Agency will prepare a report evaluating quarterly report data for the period between January 1, 1994 and December 31,

1996 and initial certification test data. Based upon this evaluation, the Administrator will sign for publication in the FEDERAL REGISTER, either:

(1) A notice that the Agency has completed its analysis and has determined that retaining the current performance specifications for relative accuracy and availability trigger conditions are appropriate; or

(2) A notice that the Agency will develop a proposed rule, based on the results of the study, proposing alternatives to the current performance specifications for relative accuracy and availability trigger conditions.

(c) If the Administrator signs a notice that the Agency will develop a proposed rule, the Administrator will:

(1) Sign a notice of proposed rulemaking by October 31, 1997; and

(2) Sign a notice of final rulemaking by October 31, 1998.

[60 FR 26519, May 17, 1995]

Subpart B—Monitoring Provisions

§ 75.10 General operating requirements.

(a) *Primary Measurement Requirement.* The owner or operator shall measure opacity, and all SO_2, NO_x, and CO_2 emissions for each affected unit as follows:

(1) The owner or operator shall install, certify, operate, and maintain, in accordance with all the requirements of this part, a SO_2 continuous emission monitoring system and a flow monitoring system with the automated data acquisition and handling system for measuring and recording SO_2 concentration (in ppm), volumetric gas flow (in scfh), and SO_2 mass emissions (in lb/hr) discharged to the atmosphere, except as provided in §§ 75.11 and 75.16 and subpart E of this part;

(2) The owner or operator shall install, certify, operate, and maintain, in accordance with all the requirements of this part, a NO_X continuous emission monitoring system (consisting of a NO_X pollutant concentration monitor and an O_2 or CO_2 diluent gas monitor) with the automated data acquisition and handling system for measuring and recording NO_X concentration (in ppm), O_2 or CO_2 concentration (in percent O_2 or CO_2) and NO_X emission rate (in lb/mmBtu) discharged to the atmosphere, except as provided in §§ 75.12 and 75.17 and subpart E of this part. The owner or operator shall account for total NO_X emissions, both NO and NO_2, either by monitoring for both NO and NO_2 or by monitoring for NO only and adjusting the emissions data to account for NO_2;

(3) The owner or operator shall determine CO_2 emissions by using one of the following options, except as provided in § 75.13 and subpart E of this part:

(i) The owner or operator shall install, certify, operate, and maintain, in accordance with all the requirements of this part, a CO_2 continuous emission monitoring system and a flow monitoring system with the automated data acquisition and handling system for measuring and recording CO_2 concentration (in ppm or percent), volumetric gas flow (in scfh), and CO_2 mass emissions (in tons/hr) discharged to the atmosphere;

(ii) The owner or operator shall determine CO_2 emissions based on the measured carbon content of the fuel and the procedures in appendix G of this part to estimate CO_2 emissions (in ton/day) discharged to the atmosphere; or

(iii) The owner or operator shall install, certify, operate, and maintain, in accordance with all the requirements of this part, a flow monitoring system and a CO_2 continuous emission monitoring system using an O_2 concentration monitor in order to determine CO_2 emissions using the procedures in appendix F of this part with the automated data acquisition and handling system for measuring and recording O_2 concentration (in percent), CO_2 concentration (in percent), volumetric gas flow (in scfh), and CO_2 mass emissions (in tons/hr) discharged to the atmosphere; and

(4) The owner or operator shall install, certify, operate, and maintain, in accordance with all the requirements in this part, a continuous opacity monitoring system with the automated data acquisition and handling system for measuring and recording the opacity of emissions (in percent opacity) discharged to the atmosphere, except as provided in §§ 75.14 and 75.18.

(b) *Primary Equipment Performance Requirements.* The owner or operator shall

ensure that each continuous emission monitoring system required by this part meets the equipment, installation, and performance specifications in Appendix A to this part; and is maintained according to the quality assurance and quality control procedures in Appendix B to this part; and shall record SO_2 and NO_x emissions in the appropriate units of measurement (i.e., lb/hr for SO_2 and lb/mmBtu for NO_x).

(c) *Heat Input Measurement Requirement.* The owner or operator shall determine and record the heat input to each affected unit for every hour or part of an hour any fuel is combusted following the procedures in Appendix F to this part.

(d) *Primary equipment hourly operating requirements.* The owner or operator shall ensure that all continuous emission and opacity monitoring systems required by this part are in operation and monitoring unit emissions or opacity at all times that the affected unit combusts any fuel except as provided in §75.11(e) and during periods of calibration, quality assurance, or preventive maintenance, performed pursuant to §75.21 and appendix B of this part, periods of repair, periods of backups of data from the data acquisition and handling system, or recertification performed pursuant to §75.20. The owner or operator shall also ensure, subject to the exceptions above in this paragraph, that all continuous opacity monitoring systems required by this part are in operation and monitoring opacity during the time following combustion when fans are still operating, unless fan operation is not required to be included under any other applicable Federal, State, or local regulation, or permit. The owner or operator shall ensure that the following requirements are met:

(1) The owner or operator shall ensure that each continuous emission monitoring system and component thereof is capable of completing a minimum of one cycle of operation (sampling, analyzing, and data recording) for each successive 15-min interval. The owner or operator shall reduce all SO_2 concentrations, volumetric flow, SO_2 mass emissions, SO_2 emission rate in lb/mmBtu (if applicable), CO_2 concentration, O_2 concentration, CO_2 mass emissions (if applicable), NO_X concentration, and NO_X emission rate data collected by the monitors to hourly averages. Hourly averages shall be computed using at least one data point in each fifteen minute quadrant of an hour, where the unit combusted fuel during that quadrant of an hour. Notwithstanding this requirement, an hourly average may be computed from at least two data points separated by a minimum of 15 minutes (where the unit operates for more than one quadrant of an hour) if data are unavailable as a result of the performance of calibration, quality assurance, or preventive maintenance activities pursuant to §75.21 and appendix B of this part, backups of data from the data acquisition and handling system, or recertification, pursuant to §75.20. The owner or operator shall use all valid measurements or data points collected during an hour to calculate the hourly averages. All data points collected during an hour shall be, to the extent practicable, evenly spaced over the hour.

(2) The owner or operator shall ensure that each continuous opacity monitoring system is capable of completing a minimum of one cycle of sampling and analyzing for each successive 10-sec period and one cycle of data recording for each successive 6-min period. The owner or operator shall reduce all opacity data to 6-min averages calculated in accordance with the provisions of part 51, appendix M of this chapter, except where the applicable State implementation plan or operating permit requires a different averaging period, in which case the State requirement shall satisfy this Acid Rain Program requirement.

(3) Failure of an SO_2, CO_2 or O_2 pollutant concentration monitor, flow monitor, or NO_X continuous emission monitoring system, to acquire the minimum number of data points for calculation of an hourly average in paragraph (d)(1) of this section, shall result in the failure to obtain a valid hour of data and the loss of such component data for the entire hour. An hourly average NO_X or SO_2 emission rate in lb/mmBtu is valid only if the minimum number of data points are acquired by

both the pollutant concentration monitor (NO_X or SO_2) and the diluent monitor (CO_2 or O_2). Except for SO_2 emission rate data in lb/mmBtu, if a valid hour of data is not obtained, the owner or operator shall estimate and record emission or flow data for the missing hour by means of the automated data acquisition and handling system, in accordance with the applicable procedure for missing data substitution in subpart D of this part.

(e) *Optional backup monitor requirements.* If the owner or operator chooses to use two or more continuous emission monitoring systems, each of which is capable of monitoring the same stack or duct at a specific affected unit, or group of units using a common stack, then the owner or operator shall designate one monitoring system as the primary monitoring system, and shall record this information in the monitoring plan, as provided for in § 75.53. The owner or operator shall designate the other monitoring system(s) as backup monitoring system(s) in the monitoring plan. The backup monitoring system(s) shall be designated as redundant backup monitoring system(s), non-redundant backup monitoring system(s), or reference method backup system(s), as described in § 75.20(d). When the certified primary monitoring system is operating and not out-of-control as defined in § 75.24, only data from the certified primary monitoring system shall be reported as valid, quality-assured data. Thus, data from the backup monitoring system may be reported as valid, quality-assured data only when the backup is operating and not out-of-control as defined in § 75.24 (or in the applicable reference method in appendix A of part 60 of this chapter) and when the certified primary monitoring system is not operating (or is operating but out-of-control). A particular monitor may be designated both as a certified primary monitor for one unit and as a certified redundant backup monitor for another unit.

(f) *Minimum measurement capability requirement.* The owner or operator shall ensure that each continuous emission monitoring system and component thereof is capable of accurately measuring, recording, and reporting data, and shall not incur a full scale exceedance, except as provided in sections 2.1.1.4, 2.1.2.4, and 2.1.4 of appendix A of this part.

(g) Minimum Recording and Reporting Requirements. The owner or operator shall record and the designated representative shall report the hourly, daily, quarterly, and annual information collected under the requirements of this part as specified in subparts F and G of this part.

[58 FR 3701, Jan. 11, 1993, as amended at 60 FR 26519, May 17, 1995]

§ 75.11 Specific provisions for monitoring SO_2 emissions (SO_2 and flow monitors).

(a) *Coal-fired units.* The owner or operator shall meet the general operating requirements in § 75.10 for an SO_2 continuous emission monitoring system for each affected coal-fired unit, except as provided in § 75.16 and in subpart E of this part. The provisions in this paragraph are suspended from July 17, 1995, through December 31, 1996.

(b) *Moisture correction.* Where SO_2 concentration is measured on a dry basis, the owner or operator shall either:

(1) Install, operate, and maintain a continuous moisture monitor for measuring and recording the moisture content of the flue gases; or

(2) Determine the moisture content of the flue gases continuously (or on an hourly basis) and correct the measured hourly volumetric flow rates for moisture when calculating SO_2 mass emissions (in lb/hr) using the procedures in appendix F of this part.

(c) *Unit with no location for a flow monitor meeting siting requirements.* Where no location exists that satisfies the minimum physical siting criteria in appendix A to this part for installation of a flow monitor in either the stack or the ducts serving an affected unit or installation of a flow monitor in either the stack or ducts is demonstrated to the satisfaction of the Administrator to be technically infeasible, either:

(1) The designated representative shall petition the Administrator for an alternative method for monitoring volumetric flow in accordance with § 75.66; or

(2) The owner or operator shall construct a new stack or modify existing ductwork to accommodate the installation of a flow monitor, and the designated representative shall petition the Administrator for an extension of the required certification date given in § 75.4 and approval of an interim alternative flow monitoring methodology in accordance with § 75.66. The Administrator may grant existing Phase I affected units an extension to January 1, 1995, and existing Phase II affected units an extension to January 1, 1996 for the submission of the certification application for the purpose of constructing a new stack or making substantial modifications to ductwork for installation of a flow monitor; or

(3) The owner or operator shall install a flow monitor in any existing location in the stack or ducts serving the affected unit at which the monitor can achieve the performance specifications of this part.

(d) *Gas-fired units and oil-fired units.* The owner or operator of an affected unit that qualifies as a gas-fired or oil-fired unit, as defined in § 72.2 of this chapter, based on information submitted by the designated representative in the monitoring plan, shall measure and record SO_2 emissions using one of the following methods:

(1) Meet the general operating requirements in § 75.10 for an SO_2 continuous emission monitoring system and flow monitoring system except as provided in paragraph (e) of this section. When the owner or operator uses an SO_2 continuous emission monitoring system and flow monitoring system to monitor SO_2 mass emissions from an affected unit, the owner or operator shall comply with applicable monitoring provisions in paragraph (a) of this section; or

(2) Provide other information satisfactory to the Administrator using the procedure specified in appendix D to this part for estimating hourly SO_2 mass emissions.

(e) *Units with SO_2 continuous emission monitoring systems during the combustion of gaseous fuel.* On or after January 1, 1997, the owner or operator of a unit with an SO_2 continuous emission monitoring system shall, during any hours in which the unit combusts only pipeline natural gas or gaseous fuel with a sulfur content no greater than natural gas, calculate SO_2 emissions in accordance with the following procedures. Prior to January 1, 1997, the owner or operator of such a unit may calculate SO_2 emissions in accordance with the following procedures.

(1) The owner or operator of a unit with an SO_2 continuous emission monitoring system shall, during any hours in which the unit combusts only pipeline natural gas, calculate SO_2 emissions using one of the following two methods in lieu of operating and recording data from the SO_2 continuous emission monitoring system:

(i) By using the heat input calculated using a certified flow monitoring system and a certified diluent monitor, the default SO_2 emission rate for pipeline natural gas from appendix D of this part, and Equation F–23 in appendix F of this part and by certifying this as a system for monitoring SO_2 mass emissions by identification in the monitoring plan, by tests for the data acquisition and handling system under § 75.20(c), and by meeting all quality control and quality assurance requirements in appendix B of this part for a flow monitor and a diluent monitor; or

(ii) By certifying an excepted monitoring system under appendix D of this part under § 75.20, by following the procedures for determining SO_2 emissions from combustion of gaseous fuels under appendix D of this part, by meeting the recordkeeping requirements of § 75.55, and by meeting all quality control and quality assurance requirements for fuel flowmeters in appendix D of this part.

(2) During any hours in which the unit combusts only gaseous fuel with a sulfur content no greater than natural gas other than pipeline natural gas, the owner or operator shall calculate SO_2 mass emissions by certifying an excepted monitoring system under appendix D of this part under § 75.20, by using the gas sampling and analysis and fuel flow procedures of appendix D of this part, by meeting the recordkeeping requirements of § 75.55, and by meeting all quality control and quality assurance requirements for fuel flowmeters in appendix D of this part.

(f) *Other units.* The owner or operator of an affected unit that combusts wood, refuse, or other material in addition to oil or gas shall comply with the monitoring provisions for coal-fired units specified in paragraph (a) of this section.

(g) *Coal-fired units.* The owner or operator shall meet the general operating requirements in § 75.10 for an SO_2 continuous emission monitoring system and a flow monitoring system for each affected coal-fired unit while the unit is combusting coal or any fuel other than natural gas or a gaseous fuel with a sulfur content no greater than natural gas, except as provided in § 75.16 and in subpart E of this part.

[58 FR 3701, Jan. 11, 1993, as amended at 60 FR 26520, 26566, May 17, 1995]

EFFECTIVE DATE NOTES: 1. At 60 FR 26560, 26566, May 17, 1995, § 75.11(a) was temporarily suspended, effective July 17, 1995 through December 31, 1996.

2. At 60 FR 26560, 26566, May 17, 1995, § 75.11(e) and (g) were temporarily added and are effective from July 17, 1995 through December 31, 1996.

§ 75.12 Specific provisions for monitoring NO_x emissions (NO_x and diluent gas monitors).

(a) *Coal-fired units, gas-fired nonpeaking units or oil-fired nonpeaking units.* The owner or operator shall meet the general operating requirements in § 75.10 of this part for a NO_x continuous emission monitoring system for each affected coal-fired unit, gas-fired nonpeaking unit, or oil-fired nonpeaking unit, except as provided in paragraph (c) of this section, § 75.17, and subpart E of this part. The diluent gas monitor in the NO_x continuous emission monitoring system may measure either O_2 or CO_2 concentration in the flue gases.

(b) *Determination of NO_x emission rate.* The owner or operator shall calculate hourly, quarterly, and annual NO_x emission rates (in lb/mmBtu) by combining the NO_x concentration (in ppm) and diluent concentration (in percent O_2 or CO_2) measurements according to the procedures in appendix F of this part.

(c) *Gas-fired peaking units or oil-fired peaking units.* The owner or operator of an affected unit that qualifies as a gas-fired peaking unit or oil-fired peaking unit, as defined in § 72.2 of this chapter, based on information submitted by the designated representative in the monitoring plan shall comply with one of the following:

(1) Meet the general operating requirements in § 75.10 for a NO_X continuous emission monitoring system; or

(2) Provide information satisfactory to the Administrator using the procedure specified in appendix E of this part for estimating hourly NO_X emission rate. However, if in the years after certification of an excepted monitoring system under appendix E of this part, a unit's operations exceed a capacity factor of 20 percent in any calendar year or exceed a capacity factor of 10.0 percent averaged over three years, the owner or operator shall install, certify, and operate a NO_X continuous emission monitoring system no later than December 31 of the following calendar year.

(d) *Other units.* The owner or operator of an affected unit that combusts wood, refuse, or other material in addition to oil or gas shall comply with the monitoring provisions specified in paragraph (a) of this section.

[58 FR 3701, Jan. 11, 1993, as amended at 60 FR 26520, May 17, 1995]

§ 75.13 Specific provisions for monitoring CO_2 emissions.

(a) *CO_2* continuous emission monitoring system. If the owner or operator chooses to use the continuous emission monitoring method, then the owner or operator shall meet the general operating requirements in § 75.10 for a CO_2 continuous emission monitoring system and flow monitoring system for each affected unit. The owner or operator shall comply with the applicable provisions specified in § 75.11 (a) through (e) or § 75.16, except that the phrase ''SO_2 continuous emission monitoring system'' is replaced with ''CO_2 continuous emission monitoring system,'' the term ''maximum potential concentration for SO_2'' is replaced with ''maximum CO_2 concentration,'' and the phrase ''SO_2 mass emissions'' is replaced with ''CO_2 mass emissions.''

(b) *Determination of CO_2 emissions using Appendix G of this part.* If the owner or operator chooses to use the appendix G method, then the owner or

operator may provide information satisfactory to the Administrator for estimating daily CO_2 mass emissions based on the measured carbon content of the fuel and the amount of fuel combusted. For units with wet flue gas desulfurization systems or other add-on emissions controls generating CO_2, the owner or operator shall use the procedures in appendix G to this part to estimate both combustion-related emissions based on the measured carbon content of the fuel and the amount of fuel combusted and sorbent-related emissions based on the amount of sorbent injected. The owner or operator shall calculate daily, quarterly, and annual CO_2 mass emissions (in tons) in accordance with the procedures in appendix G to this part.

(c) *Determination of CO_2 mass emissions using an O_2 monitor according to appendix F.* If the owner or operator chooses to use the appendix F method, then the owner or operator may determine hourly CO_2 concentration and mass emissions with a flow monitoring system, a continuous O_2 concentration monitor, fuel F and F_c factors, and where O_2 concentration is measured on a dry basis, hourly corrections for the moisture content of the flue gases, using the methods and procedures specified in appendix F to this part. For units using a common stack, multiple stack, or bypass stack, the owner or operator may use the provisions of §75.16, except that the phrase ''SO_2 continuous emission monitoring system'' is replaced with ''CO_2 continuous emission monitoring system,'' the term ''maximum potential concentration of SO'' is replaced with ''maximum CO_2 concentration,'' and the phrase ''SO_2 mass emissions'' is replaced with ''CO_2 mass emissions.''

[58 FR 3701, Jan. 11, 1993, as amended at 60 FR 26521, May 17, 1995]

§75.14 Specific provisions for monitoring opacity.

(a) *Coal-fired units and oil-fired units.* The owner or operator shall meet the general operating provisions in §75.10 of this part for a continuous opacity monitoring system for each affected coal-fired or oil-fired unit, except as provided in paragraphs (b), (c), and (d) of this section and in §75.18. Each continuous opacity monitoring system shall meet the design, installation, equipment, and performance specifications in Performance Specification 1 in appendix B to part 60 of this chapter. Any continuous opacity monitoring system previously certified to meet Performance Specification 1 shall be deemed certified for the purposes of this part.

(b) *Unit with wet flue gas pollution control system.* If the owner or operator can demonstrate that condensed water is present in the exhaust flue gas stream and would impede the accuracy of opacity measurements, then the owner or operator of an affected unit equipped with a wet flue gas pollution control system for SO_2 emissions or particulates is exempt from the opacity monitoring requirements of this part.

(c) *Gas-fired units.* The owner or operator of an affected unit that qualifies as gas-fired, as defined in §72.2 of this chapter, based on information submitted by the designated representative in the monitoring plan is exempt from the opacity monitoring requirements of this part. Whenever a unit previously categorized as a gas-fired unit is recategorized as another type of unit by changing its fuel mix, the owner or operator shall install, operate, and certify a continuous opacity monitoring system as required by paragraph (a) of this section by December 31 of the following calendar year.

(d) *Diesel-fired units and dual-fuel reciprocating engine units.* The owner or operator of an affected diesel-fired unit or a dual-fuel reciprocating engine unit is exempt from the opacity monitoring requirements of this part.

[58 FR 3701, Jan. 11, 1993, as amended at 61 FR 25581, May 22, 1996]

§75.15 Specific provisions for monitoring SO_2 emissions removal by qualifying Phase I technology.

(a) *Additional monitoring provisions.* In addition to the SO_2 monitoring requirements in §75.11 or §75.16, for the purposes of adequately monitoring SO_2 emissions removal by qualifying Phase I technology operated pursuant to §72.42 of this chapter, the owner or operator shall, except where specified below, use both an inlet SO_2-diluent

continuous emission monitoring system and an outlet SO_2-diluent continuous emission monitoring system, consisting of an SO_2 pollutant concentration monitor and a diluent CO_2 or O_2 monitor. (The outlet SO_2-diluent continuous emission monitoring system may consist of the same SO_2 pollutant concentration monitor that is required under § 75.11 or § 75.16 for the measurement of SO_2 emissions discharged to the atmosphere and the diluent monitor used as part of the NO_X continuous emission monitoring system that is required under § 75.12 or § 75.17 for the measurement of NO_X emissions discharged into the atmosphere.) During the period when required to measure emissions removal efficiency, from January 1, 1997 through December 31, 1999, the owner or operator shall meet the general operating requirements in § 75.10 for both the inlet and the outlet SO_2-diluent continuous emission monitoring systems, and in addition, the owner or operator shall comply with the monitoring provisions in this section. On January 1, 2000, the owner or operator may cease operating and/or reporting on the inlet SO_2-diluent continuous emission monitoring system results for the purposes of the Acid Rain Program.

(1) *Pre-combustion technology*. The owner or operator of an affected unit for which a precombustion technology has been employed for the purpose of meeting qualifying Phase I technology requirements shall use sections 4 and 5 of Method 19 in appendix A of part 60 of this chapter to estimate, daily, for the purposes of this part, the percentage SO_2 removal efficiency from such technology, and shall substitute the following ASTM methods for sampling, preparation, and analysis of coal for those cited in Method 19: ASTM D2234–89, Standard Test Method for Collection of a Gross Sample of Coal (Type I, Conditions A, B, or C and systematic spacing), ASTM D2013–86, Standard Method of Preparing Coal Samples for Analysis, ASTM D2015–91, Standard Test Method for Gross Calorific Value of Coal and Coke by the Adiabatic Calorimeter, and ASTM D3177–89, Standard Test Methods for Total Sulfur in the Analysis Sample of Coal and Coke, or ASTM D4239–85, Standard Test Method for Sulfur in the Analysis Sample of Coal and Coke Using High Temperature Tube Furnace Combustion Methods. Each of the preceding ASTM methods is incorporated by reference in § 75.6.

(2) *Combustion technology*. The owner or operator of an affected unit for which a combustion technology has been installed and operated for the purpose of meeting qualifying Phase I technology requirements shall use the coal sampling and analysis procedures in paragraph (a)(1) of this section and Equation 5 in paragraph (b) of this section to estimate the percentage SO_2 removal efficiency from such technology.

(3) *Post-combustion technology*. The owner or operator of an affected unit for which a post-combustion technology has been installed and operated for the purpose of meeting qualifying Phase I technology requirements shall install, certify, operate, and maintain both an inlet and an outlet SO_2-diluent continuous emission monitoring system.

(i) Both inlet and outlet SO_2-diluent continuous emission monitoring systems shall consist of an SO_2 pollutant concentration monitor and a diluent gas monitor for measuring the O_2 or CO_2 concentrations in the flue gas and shall measure and record average hourly SO_2 emission rates (in lb/mmBtu).

(ii) The SO_2-diluent continuous emission monitoring systems for measuring and recording the SO_2 emissions removal by a qualifying Phase I technology shall meet all the requirements of this part during the period when required to measure emissions removal, from January 1, 1997 through December 31, 1999, and shall meet the certification deadline specified in § 75.4.

(iii) The SO_2 pollutant concentration monitors and the diluent gas monitors at the inlet and outlet of the SO_2 emission controls shall meet all requirements specified in appendices A and B to this part.

(b) *Demonstration of SO_2 emissions removal efficiency*. The owner or operator shall demonstrate the average annual percentage SO_2 emissions removal efficiency of the installed technology or combination of technologies during the period when required to measure emissions removal, from January 1, 1997

through December 31, 1999, according to the following procedures:

(1) Calculate the average annual SO_2 emissions removal efficiency using Equations 1–7 as follows:

$$\%R=[100[1.0-(1.0-\%R_f/100)\quad(1.0-\%R_g/100)\quad(1.0-\%R_c/100)]\quad (Eq.1)$$

where,

%R = Overall percentage SO_2 emissions removal efficiency.

$\%R_f$ = Percentage SO_2 emissions removal efficiency from fuel pretreatment, calculated from Equation 19–22 in Reference Method 19 in Appendix A to part 60 of this chapter.

$\%R_c$ = Percentage SO_2 emissions removal of combustion emission controls, calculated from Equation 5.

$\%R_g$ = Percentage SO_2 removal efficiency of post-combustion emission controls, calculated from Equation 2.

$$\%R_g=100\left[1.0-\frac{E_o}{E_i}\right]$$

(Eq.2)

where,

E_o=Average hourly SO_2 emission rate in lb/mmBtu, measured at the outlet of the post-combustion emission controls during the calendar year, calculated from Equation 3.

E_i=Average hourly SO_2 emission rate in lb/mmBtu, measured at the inlet to the post-combustion emission controls during the calendar year, calculated from Equation 4.

$$E_o=\frac{\sum_{j=1}^{n} E_{hoj}}{n}$$

(Eq. 3)

where,

E_{hoj}=Each hourly SO_2 emission rate in lb/mmBtu, measured by the continuous emission monitoring system at the outlet to the post-combustion emission controls.

n=Total unit operating hours during which the SO_2 continuous emission monitoring system at the outlet of the emission controls collected quality-assured data.

$$E_i=\frac{\sum_{j=1}^{m} E_{hij}}{m}$$

(Eq. 4)

where,

E_{hij}=Each hourly SO_2 emission rate in lb/mmBtu, measured by the continuous emission monitoring system at the inlet to the post-combustion emission controls.

m=Total unit operating hours during which the SO_2 continuous emission monitoring system at the inlet to the emission controls collected quality-assured data.

$$\%R_c=100\left[1.0-\frac{E_{co}}{E_{ci}}\right]\qquad \text{(Eq. 5)}$$

where,

E_{co}=Average hourly SO_2 emission rate in lb/mmBtu, measured at the outlet of the combustion emission controls during the calendar year, calculated from Equation 6.

E_{ci}=Average hourly SO_2 emission rate in lb/mmBtu, determined by coal sampling and analysis according to the methods and procedures in paragraph (a)(1) of this section, calculated from Equation 7.

$$E_{co}=\frac{\sum_{j=1}^{q} E_{ocj}}{q}$$

(Eq. 6)

where,

E_{ocj}=Each hourly SO_2 emission rate in lb/mmBtu, measured by the continuous emission monitoring system at the outlet to the combustion controls.

q=Total unit operating hours for which the outlet SO_2 continuous emission monitoring system collected quality-assured data during the calendar year.

$$E_{ci}=\frac{\sum_{j=1}^{p} E_{icj}}{p}\qquad \text{Eq. 7)}$$

where,

E_{icj}=Each average hourly SO_2 emission rate in lb/mmBtu, determined by the coal sampling and analysis methods and procedures in paragraph (a)(1) of this section and calculated using appendix A, Method 19 of part 60 of this chapter, performed once a day.

p=Total unit operation hours during which coal sampling and analysis is performed to determine SO_2 emissions at the inlet to the combustion controls.

(2) The owner or operator shall include all periods when fuel is being combusted in determining total unit operating hours for the purpose of calculating the average SO_2 emissions removal efficiency during the calendar year.

(3) The owner or operator shall use only quality-assured SO_2 emissions data in the calculation of SO_2 emissions removal efficiency.

(4) Compliance with the 90-percent SO_2 emissions removal efficiency requirement under this part is determined annually beginning January 1, 1997 through December 31, 1999.

[58 FR 3701, Jan. 11, 1993, as amended at 60 FR 26521, May 17, 1995; 61 FR 25582, May 22, 1996]

§ 75.16 Special provisions for monitoring emissions from common, bypass, and multiple stacks for SO_2 emissions and heat input determinations.

(a) *Phase I common stack procedures.* Prior to January 1, 2000, the following procedures shall be used when more than one unit utilize a common stack:

(1) *Only Phase I units or only Phase II units using common stack.* When a Phase I unit uses a common stack with one or more other Phase I units, but no other units, or when a Phase II unit uses a common stack with one or more Phase II units, but no other units, the owner or operator shall either:

(i) Install, certify, operate, and maintain an SO_2 continuous emission monitoring system and flow monitoring system in the duct to the common stack from each affected unit; or

(ii) Install, certify, operate, and maintain an SO_2 continuous emission monitoring system and flow monitoring system in the common stack; and

(A) Combine emissions for the affected units for recordkeeping and compliance purposes; or

(B) Provide information satisfactory to the Administrator on methods for apportioning SO_2 mass emissions measured in the common stack to each of the affected units. The designated representative shall provide the information to the Administrator through a petition submitted under § 75.66. The Administrator may approve such substitute methods for apportioning SO_2 mass emissions measured in a common stack whenever the method ensures complete and accurate accounting of all emissions regulated under this part.

(2) *Phase I unit using common stack with non-Phase I unit(s).* When one or more Phase I units uses a common stack with one or more Phase II or nonaffected units, the owner or operator shall either:

(i) Install, certify, operate, and maintain an SO_2 continuous emission monitoring system and flow monitoring system in the duct to the common stack from each affected unit; or

(ii) Install, certify, operate, and maintain an SO_2 continuous emission monitoring system and flow monitoring system in the common stack; and

(A) Designate any Phase II unit(s) as a substitution or compensating unit(s) in accordance with part 72 of this chapter and any nonaffected unit(s) as opt-in units in accordance with part 74 of this chapter and combine emissions for recordkeeping and compliance purposes; or

(B) Install, certify, operate, and maintain an SO_2 continuous emission monitoring system and flow monitoring system in the duct from each Phase II or nonaffected unit; calculate SO_2 mass emissions from the Phase I units as the difference between SO_2 mass emissions measured in the common stack and SO_2 mass emissions measured in the ducts of the Phase II and nonaffected units; record and report the calculated SO_2 mass emissions from the Phase I units; and combine emissions for the Phase I units for compliance purposes; or

(C) Install, certify, operate, and maintain an SO_2 continuous emission

monitoring system and flow monitoring system in the duct from each Phase I or nonaffected unit; calculate SO_2 mass emissions from the Phase II units as the difference between SO_2 mass emissions measured in the common stack and SO_2 mass emissions measured in the ducts of the Phase I and nonaffected units; and combine emissions for the Phase II units for recordkeeping and compliance purposes; or

(D) Record the combined emissions from all units as the combined SO_2 mass emissions for the Phase I units for recordkeeping and compliance purposes; or

(E) Provide information satisfactory to the Administrator on methods for apportioning SO_2 mass emissions measured in the common stack to each of the units using the common stack. The designated representative shall provide the information to the Administrator through a petition submitted under § 75.66. The Administrator may approve such substitute methods for apportioning SO_2 mass emissions measured in a common stack whenever the method ensures complete and accurate accounting of all emissions regulated under this part.

(3) *Phase II unit using common stack with non-affected unit(s).* When one or more Phase II units uses a common stack with one or more nonaffected units, the owner or operator shall follow the procedures in paragraph (b)(2) of this section.

(b) *Phase II common stack procedures.* On or after January 1, 2000, the following procedures shall be used when more than one unit uses a common stack:

(1) *Unit utilizing common stack with other affected unit(s).* When a Phase I or Phase II affected unit utilizes a common stack with one or more other Phase I or Phase II affected units, but no nonaffected units, the owner or operator shall either:

(i) Install, certify, operate, and maintain an SO_2 continuous emission monitoring system and flow monitoring system in the duct to the common stack from each affected unit; or

(ii) Install, certify, operate, and maintain an SO_2 continuous emission monitoring system and flow monitoring system in the common stack; and

(A) Combine emissions for the affected units for recordkeeping and compliance purposes; or

(B) Provide information satisfactory to the Administrator on methods for apportioning SO_2 mass emissions measured in the common stack to each of the Phase I and Phase II affected units. The designated representative shall provide the information to the Administrator through a petition submitted under § 75.66. The Administrator may approve such substitute methods for apportioning SO_2 mass emissions measured in a common stack whenever the method ensures complete and accurate accounting of all emissions regulated under this part.

(2) *Unit utilizing common stack with nonaffected unit(s).* When one or more Phase I or Phase II affected units utilizes a common stack with one or more nonaffected units, the owner or operator shall either:

(i) Install, certify, operate, and maintain an SO_2 continuous emission monitoring system and flow monitoring system in the duct to the common stack from each Phase I and Phase II unit; or

(ii) Install, certify, operate, and maintain an SO_2 continuous emission monitoring system and flow monitoring system in the common stack; and

(A) Designate the nonaffected units as opt-in units in accordance with part 74 of this chapter and combine emissions for recordkeeping and compliance purposes; or

(B) Install, certify, operate, and maintain an SO_2 continuous emission monitoring system and flow monitoring system in the duct from each nonaffected unit; determine SO_2 mass emissions from the affected units as the difference between SO_2 mass emissions measured in the common stack and SO_2 mass emissions measured in the ducts of the nonaffected units; and combine emissions for the Phase I and Phase II affected units for recordkeeping and compliance purposes; or

(C) Record the combined emissions from all units as the combined SO_2 mass emissions for the Phase I and Phase II affected units for recordkeeping and compliance purposes; or

(D) Petition through the designated representative and provide information

satisfactory to the Administrator on methods for apportioning SO_2 mass emissions measured in the common stack to each of the units using the common stack. The Administrator may approve such demonstrated substitute methods for apportioning SO_2 mass emissions measured in a common stack whenever the demonstration ensures complete and accurate accounting of all emissions regulated under this part.

(c) *Unit with bypass stack.* Whenever any portion of the flue gases from an affected unit can be routed so as to avoid the installed SO_2 continuous emission monitoring system and flow monitoring system, the owner or operator shall either:

(1) Install, certify, operate, and maintain an SO_2 continuous emission monitoring system or flow monitoring system on the bypass flue, duct, or stack gas stream and calculate SO_2 mass emissions for the unit as the sum of the emissions recorded by all required monitoring systems; or

(2) Monitor SO_2 mass emissions on the bypass flue, duct, or stack gas stream using the reference methods in § 75.22(b) for SO_2 and flow and calculate SO_2 mass emissions for the unit as the sum of the emissions recorded by the installed monitoring systems on the main stack and the emissions measured by the reference method monitoring systems; or

(3) Where a Federal, State, or local regulation or permit prohibits operation of the bypass stack or duct or limits operation of the bypass stack or duct to emergency situations resulting from the malfunction of a flue gas desulfurization system record the following values for each hour during which emissions pass through the bypass stack or duct: the maximum potential concentration for SO_2 as determined under section 2 of appendix A of this part, and the hourly volumetric flow value that would be substituted for the flow monitor installed on the main stack or flue under the missing data procedures in subpart D of this part if data from the flow monitor installed on the main stack or flue were missing for the hour. Calculate SO_2 mass emissions for the unit as the sum of the emissions calculated with the substitute values and the emissions recorded by the SO_2 and flow monitoring systems installed on the main stack.

(d) *Unit with multiple stacks or ducts.* When the flue gases from an affected unit utilize two or more ducts feeding into two or more stacks (that may include flue gases from other affected or nonaffected units), or when the flue gases utilize two or more ducts feeding into a single stack and the owner or operator chooses to monitor in the ducts rather than the stack, the owner or operator shall either:

(1) Install, certify, operate, and maintain an SO_2 continuous emission monitoring system and flow monitoring system in each duct feeding into the stack or stacks and determine SO_2 mass emissions from each affected unit as the sum of the SO_2 mass emissions recorded for each duct; or

(2) Install, certify, operate, and maintain an SO_2 continuous emission monitoring system and flow monitoring system in each stack. Determine SO_2 mass emissions from each affected unit as the sum of the SO_2 mass emissions recorded for each stack, except that where another unit also exhausts flue gases to one or more of the stacks, the owner or operator shall also comply with the applicable common stack requirements of this section to determine and record SO_2 mass emissions from the units using that stack.

(e) *Heat input.* The owner or operator of an affected unit using a common stack, bypass stack, or multiple stacks shall account for heat input according to the following:

(1) The owner or operator of an affected unit using a common stack, bypass stack, or multiple stack with a diluent monitor and a flow monitor on each stack may choose to determine the heat input for the affected unit, wherever flow and diluent monitor measurements are used to determine the heat input, using the procedures specified in paragraphs (a) through (d) of this section, except that the terms ''SO_2 mass emissions'' and ''emissions'' are replaced with the term ''heat input'' and the phrase ''SO_2 continuous emission monitoring system and flow monitoring system'' is replaced with the phrase ''a diluent monitor and a flow monitor''.

(2) Notwithstanding paragraph (e)(1) of this section, for any common stack where any unit utilizing the common stack has a NO_X emission limitation pursuant to Section 407(b) of the Act, the owner or operator shall not combine heat input for compliance purposes and shall determine heat input for that unit separately.

(3) Notwithstanding paragraph (e)(1) of this section, during the period prior to January 1, 2000, the owner or operator shall not combine heat input for units utilizing a common stack in order to determine heat input for each unit for purposes of §75.10.

(4) In the event that an owner or operator of a unit with a bypass stack does not install and certify a diluent monitor and flow monitoring system in a bypass stack, the owner or operator shall determine total heat input to the unit for each unit operating hour during which the bypass stack is used according to the missing data provisions for heat input under §75.36 or the procedures for calculating heat input from fuel sampling and analysis in section 5.5 of appendix F of this part.

[60 FR 26522, May 17, 1995, as amended at 61 FR 25582, May 22, 1996]

§75.17 Specific provisions for monitoring emissions from common, bypass, and multiple stacks for NO_x emission rate.

(a) *Unit utilizing common stack with other affected unit(s).* When an affected unit utilizes a common stack with one or more affected units, but no non-affected units, the owner or operator shall either:

(1) Install, certify, operate, and maintain a NO_x continuous emission monitoring system in the duct to the common stack from each affected unit; or

(2) Install, certify, operate, and maintain a NO_x continuous emission monitoring system in the common stack and follow the appropriate procedure in paragraphs (a)(2) (i) through (iii) of this section, depending on whether or not the units are required to comply with a NO_x emission limitation (in lb/mmBtu, annual average basis) pursuant to section 407(b) of the Act (referred to hereafter as ''NO_x emission limitation'').

(i) When each of the affected units has a NO_x emission limitation, the designated representative shall submit a compliance plan to the Administrator that indicates:

(A) Each unit will comply with the most stringent NO_x emission limitation of any unit utilizing the common stack; or

(B) Each unit will comply with the applicable NO_X emission limitation by averaging its emissions with the other unit(s) utilizing the common stack, pursuant to the emissions averaging plan submitted under part 76 of this chapter; or

(C) Each unit's compliance with the applicable NO_X emission limit will be determined by a method satisfactory to the Administrator for apportioning to each of the units the combined NO_X emission rate (in lb/mmBtu) measured in the common stack, as provided in a petition submitted by the designated representative. The Administrator may approve such demonstrated substitute methods for apportioning NO_X emission rate measured in a common stack whenever the demonstration ensures complete and accurate estimation of all emissions regulated under this part.

(ii) When none of the affected units has a NO_x emission limitation, the owner or operator and the designated representative have no additional obligations pursuant to section 407 of the Act and may record and report a combined NO_x emission rate (in lb/mmBtu) for the affected units utilizing the common stack.

(iii) When at least one of the affected units has a NO_x emission limitation and at least one of the affected units does not have a NO_x emission limitation, the owner or operator shall either:

(A) Install, certify, operate, and maintain NO_x and diluent monitors in the ducts from the affected units; or

(B) Develop, demonstrate, and provide information satisfactory to the Administrator on methods for apportioning the combined NO_x emission rate (in lb/mmBtu) measured in the common stack on each of the units. The Administrator may approve such demonstrated substitute methods for apportioning the combined NO_x emission rate measured in a common stack

whenever the demonstration ensures complete and accurate estimation of all emissions regulated under this part.

(b) *Unit utilizing common stack with nonaffected unit(s).* When one or more affected units utilizes a common stack with one or more nonaffected units, the owner or operator shall either:

(1) Install, certify, operate, and maintain a NO_x continuous emission monitoring system in the duct from each affected unit; or

(2) Develop, demonstrate, and provide information satisfactory to the Administrator on methods for apportioning the combined NO_x emission rate (in lb/mmBtu) measured in the common stack for each of the units. The Administrator may approve such demonstrated substitute methods for apportioning the combined NO_x emission rate measured in a common stack whenever the demonstration ensures complete and accurate estimation of all emissions regulated under this part.

(c) *Unit with multiple stacks or bypass stack.* When the flue gases from an affected unit utilize two or more ducts feeding into two or more stacks (that may include flue gases from other affected or nonaffected units), or when flue gases utilize two or more ducts feeding into a single stack and the owner or operator chooses to monitor in the ducts rather than the stack, the owner or operator shall monitor the NO_X emission rate representative of each affected unit. Where another unit also exhausts flue gases to one or more of the stacks where monitoring systems are installed, the owner or operator shall also comply with the applicable common stack monitoring requirements of this section. The owner or operator shall either:

(1) Install, certify, operate, and maintain a NO_X continuous emission monitoring system in each stack or duct and determine the NO_X emission rate for the unit as the Btu-weighted sum of the NO_X emission rates measured in the stacks or ducts using the heat input estimation procedures in appendix F of this part; or

(2) Install, certify, operate, and maintain a NO_X continuous emission monitoring system in one stack or duct from each affected unit and record the monitored value as the NO_X emission rate for the unit. The owner or operator shall account for NO_X emissions from the unit during all times when the unit combusts fuel.

[58 FR 3701, Jan. 11, 1993, as amended at 60 FR 26523, May 17, 1995]

§ 75.18 Specific provisions for monitoring emissions from common and bypass stacks for opacity.

(a) *Unit using common stack.*When an affected unit utilizes a common stack with other affected units or nonaffected units, the owner or operator shall comply with the applicable monitoring provision in this paragraph, as determined by existing Federal, State, or local opacity regulations.

(1) Where another regulation requires the installation of a continuous opacity monitoring system upon each affected unit, the owner or operator shall install, certify, operate, and maintain a continuous opacity monitoring system meeting Performance Specification 1 in appendix B to part 60 of this chapter (referred to hereafter as a ''certified continuous opacity monitoring system'') upon each unit.

(2) Where another regulation does not require the installation of a continuous opacity monitoring system upon each affected unit, and where the affected source is not subject to any existing Federal, State, or local opacity regulations, the owner or operator shall install, certify, operate, and maintain a certified continuous opacity monitoring system upon each common stack for the combined effluent.

(b) *Unit using bypass stack.* Where any portion of the flue gases from an affected unit can be routed so as to bypass the installed continuous opacity monitoring system, the owner or operator shall install, certify, operate, and maintain a certified continuous opacity monitoring system on each bypass stack flue, duct, or stack gas stream unless either:

(1) An applicable Federal, State, or local opacity regulation or permit exempts the unit from a requirement to install a continuous opacity monitoring system in the bypass stack; or

(2) A continuous opacity monitoring system is already installed and certified at the inlet of the add-on emissions controls.

[58 FR 3701, Jan. 11, 1993, as amended at 60 FR 26524, May 17, 1995; 60 FR 40296, Aug. 8, 1995]

Subpart C—Operation and Maintenance Requirements

§75.20 Certification and recertification procedures.

(a) *Initial certification approval process.* The owner or operator shall ensure that each continuous emission or opacity monitoring system required by this part, which includes the automated data acquisition and handling system, and, where applicable, the CO_2 continuous emission monitoring system, meets the initial certification requirements of this section and shall ensure that all applicable certification tests under paragraph (c) of this section are completed by the deadlines specified in §75.4 and prior to use in the Acid Rain Program. In addition, whenever the owner or operator installs a continuous emission or opacity monitoring system in order to meet the requirements of §§75.13 through 75.18 where no continuous emission or opacity monitoring system was previously installed, initial certification is required.

(1) *Notification of initial certification test dates.* The owner or operator or designated representative shall submit a written notice of the dates of initial certification testing at the unit as specified in §75.60 and §75.61(a)(1)(i).

(2) *Certification application.* The owner or operator shall apply for certification of each continuous emission or opacity monitoring system used under the Acid Rain Program. The owner or operator shall submit the certification application in accordance with §75.60 and each complete certification application shall include the information specified in §75.63.

(3) *Provisional approval of certification applications.* Upon the successful completion of the required certification procedures of this section for each continuous emission or opacity monitoring system or component thereof, each continuous emission or opacity monitoring system or component thereof shall be deemed provisionally certified for use under the Acid Rain Program for a period not to exceed 120 days following receipt by the Administrator of the complete certification application under paragraph (a)(4) of this section; provided that no continuous emission or opacity monitor systems for a combustion source seeking to enter the Opt-in Program in accordance with part 74 of this chapter shall be deemed provisionally certified for use under the Acid Rain Program. Data measured and recorded by a provisionally certified continuous emission or opacity monitoring system or component thereof, in accordance with the requirements of appendix B of this part, will be considered valid quality-assured data (retroactive to the date and time of successful completion of all certification tests), provided that the Administrator does not invalidate the provisional certification by issuing a notice of disapproval within 120 days of receipt of the complete certification application.

(4) *Certification application formal approval process.* The Administrator will issue a written notice of approval or disapproval of the certification application to the owner or operator within 120 days of receipt of the complete certification application. In the event the Administrator does not issue such a written notice within 120 days of receipt, each continuous emission or opacity monitoring system which meets the performance requirements of this part and is included in the certification application will be deemed certified for use under the Acid Rain Program.

(i) *Approval notice.* If the certification application is complete and shows that each continuous emission or opacity monitoring system meets the performance requirements of this part, then the Administrator will issue a written notice of approval of the certification application within 120 days of receipt.

(ii) *Incomplete application notice.* If the certification application is not complete, then the Administrator will issue a written notice of insufficiency. The 120-day review period shall not begin prior to receipt of a complete application.

(iii) *Disapproval notice.* If the certification application is complete but shows that any continuous emission or opacity monitoring system or component thereof does not meet the performance requirements of this part, the Administrator shall issue a written notice of disapproval of the certification application within 120 days of receipt. By issuing the notice of disapproval, the provisional certification is invalidated by the Administrator, and the data measured and recorded by each uncertified continuous emission or opacity monitoring system or component thereof shall not be considered valid quality-assured data from the date and time of completion of the invalid certification tests until the date and time that the owner or operator completes subsequently approved initial certification tests. The owner or operator shall follow the procedures for loss of certification in paragraph (a)(5) of this section for each continuous emission or opacity monitoring system or component thereof which was disapproved.

(iv) *Audit decertification.* The Administrator may issue a notice of disapproval of the certification status of a continuous emission or opacity monitoring system or component thereof, in accordance with § 75.21.

(5) *Procedures for loss of certification.* When the Administrator issues a notice of disapproval of a certification application or a notice of disapproval of certification status (as specified in paragraph (a)(4) of this section), then:

(i) The owner or operator shall substitute the following values, as applicable, for each hour of unit operation during the period of invalid data specified in paragraph (a)(4)(iii) of this section or in § 75.21: the maximum potential concentration of SO_2 as defined in section 2.1 of appendix A of this part to report SO_2 concentration; the maximum potential NO_X emission rate, as defined in § 72.2 of this chapter to report NO_X emissions, the maximum potential flow rate, as defined in section 2.1 of appendix A of this part to report volumetric flow, or the maximum CO_2 concentration used to determine the maximum potential concentration of SO_2 in section 2.1.1.1 of appendix A of this part to report CO_2 concentration data until such time, date, and hour as the continuous emission monitoring system or component thereof can be adjusted, repaired, or replaced and certification tests successfully completed; and

(ii) The designated representative shall submit a notification of certification retest dates as specified in § 75.61(a)(1)(ii) and a new certification application according to the procedures in paragraph (a)(2) of this section; and

(iii) The owner or operator shall repeat all certification tests or other requirements that were failed by the continuous emission or opacity monitoring system, as indicated in the Administrator's notice of disapproval, no later than 30 unit operating days after the date of issuance of the notice of disapproval.

(b) *Recertification approval process.* Whenever the owner or operator makes a replacement, modification, or change in the certified continuous emission monitoring system or continuous opacity monitoring system (which includes the automated data acquisition and handling system, and, where applicable, the CO_2 continuous emission monitoring system), that significantly affects the ability of the system to measure or record the SO_2 concentration, volumetric gas flow, SO_2 mass emissions, NO_X emission rate, CO_2 concentration, or opacity, or to meet the requirements of § 75.21 or appendix B of this part, the owner or operator shall recertify the continuous emission monitoring system, continuous opacity monitoring system, or component thereof according to the procedures in this paragraph. Examples of changes which require recertification include: replacement of the analytical method, including the analyzer; change in location or orientation of the sampling probe or site; rebuilding of the analyzer or all monitoring system equipment; and replacement of an existing continuous emission monitoring system or continuous opacity monitoring system. In addition, if a continuous emission monitoring system is not operating for more than two calendar years, then the owner or operator shall recertify the

continuous emission monitoring system. The Administrator may determine whether a replacement, modification or change in a monitoring system significantly affects the ability of the monitoring system to measure or record the SO_2 concentration, volumetric gas flow, SO_2 mass emissions, NO_X emission rate, CO_2 concentration, or opacity. Furthermore, whenever the owner or operator makes a replacement, modification, or change to the flue gas handling system or the unit operation that significantly changes the flow or concentration profile or opacity of monitored emissions, the owner or operator shall recertify the continuous emission or opacity monitoring system or component thereof according to the procedures in this paragraph. Recertification is not required prior to use of a non-redundant backup continuous emission monitoring system in cases where all of the following conditions have been met: the non-redundant backup continuous emission monitoring system has previously been certified at the same sampling location; all components of the non-redundant backup continuous emission monitoring system have previously been certified; and component monitors of the non-redundant backup continuous emission monitoring system pass a linearity check (for pollutant concentration monitors) or a calibration error test (for flow monitors) prior to their use for monitoring of emissions or flow. In addition, changes resulting from routine or normal corrective maintenance and/or quality assurance activities do not require recertification, nor do software modifications in the automated data acquisition and handling system, where the modification is only for the purpose of generating additional or modified reports for the State Implementation Plan or for reporting requirements under subpart G of this part.

(1) *Tests required.* For recertification testing, the owner or operator shall complete all certification tests in paragraph (c) of this section applicable to the monitoring system, except as approved by the Administrator. Such approval may be obtained by petition under § 75.66 or may be provided in written guidance from the Administrator.

(2) *Notification of recertification test dates.* The owner or operator or designated representative shall submit notice of testing dates for recertification under this paragraph as specified in § 75.61(a)(1)(ii), unless such testing is required as a result of a change in the flue gas handling system, a change in location or orientation of the sampling probe or site, or the planned replacement of a continuous emission or opacity monitoring system or component thereof. In such cases, the owner or operator shall provide notice in accordance with the notice provisions for initial certification testing in § 75.61(a)(1)(i).

(3) *Substitution of missing data.* (i) The owner or operator shall substitute for missing data during the period following the replacement, modification, or change to the monitoring system up to the time of successful completion of all recertification testing according to the standard missing data procedures in §§ 75.33 through 75.36, and shall use the standard missing data substitution procedures for all missing data periods following the recertification, except as provided below.

(ii) If the replacement, modification, or change is such that the data collected by the prior certified monitoring system are no longer representative, such as after a change to the flue gas handling system or unit operation that requires changing the span value to be consistent with Section 2.1 of appendix A of this part, the owner or operator must also substitute the appropriate one of the following values: for a change that results in a significantly higher concentration or flow rate, substitute maximum potential values according to the procedures in paragraph (a)(5) of this section during the period following the replacement, modification, or change up to the time of the successful completion of all recertification testing; or for a change that results in a significantly lower concentration or flow rate, substitute data using the standard missing data procedures during the period following the replacement, modification, or change up to the time of the successful completion of all recertification testing.

The owner or operator shall then use the initial missing data procedures in § 75.31 following provisional certification, unless otherwise provided by § 75.34 for units with add-on emission controls.

(4) *Recertification application.* The designated representative shall apply for recertification of a continuous emission or opacity monitoring system used under the Acid Rain Program according to the procedures in paragraph (a)(2) of this section. Each complete recertification application shall include the information specified in § 75.63 of this part.

(5) *Approval/disapproval of request for recertification.* The procedures for provisional certification in paragraph (a)(3) of this section shall apply. The Administrator will issue a written notice of approval or disapproval according to the procedures in paragraph (a)(4) of this section, except that the period for the Administrator's review provided under paragraph (a)(4) of this section shall not exceed 60 days following receipt of the complete recertification application by the Administrator. The missing data substitution procedures under paragraph (b)(3) of this section shall apply in the event of a loss of recertification.

(c) *Certification procedures.* Prior to the deadline in § 75.4 of this part, the owner or operator shall conduct certification tests and in accordance with § 75.63, the designated representative shall submit an application to demonstrate that the continuous emission or opacity monitoring system and components thereof meet the specifications in appendix A to this part. The owner or operator shall compare reference method values with output from the automated data acquisition and handling system that is part of the continuous emission monitoring system being tested. Except as specified in paragraphs (b)(1), (d) and (e) of this section, the owner or operator shall perform the following tests for initial certification or recertification of continuous emission or opacity monitoring systems or components according to the requirements of appendix A of this part:

(1) For each SO_2 pollutant concentration monitor and NO_x continuous emission monitoring system:

(i) A 7-day calibration error test, where, for the NO_x continuous emission monitoring system, this test is performed separately on the NO_x pollutant concentration monitor and the diluent gas monitor;

(ii) A linearity check, where, for the NO_x continuous emission monitoring system, this check is performed separately on the NO_x pollutant concentration monitor and the diluent gas monitor;

(iii) A relative accuracy test audit;

(iv) A bias test; and

(v) A cycle time test.

(v) A cycle time/response time test.

(2) For each flow monitor:

(i) A 7-day calibration error test;

(ii) Relative accuracy test audits at three flue gas velocities; and

(iii) A bias test (at normal operating load).

(3) The relative accuracy test audits for the SO_2 pollution concentration monitor and the flow monitor shall be performed contemporaneously.

(4) The certification test data from an O_2 or a CO_2 diluent gas monitor certified for use in a NO_X continuous emission monitoring system may be submitted to meet the requirements of § 75.20(c)(5).

(5) For each CO_2 pollutant concentration monitor or O_2 monitor which is part of a CO_2 continuous emission monitoring system or is used to monitor heat input and for each SO_2-diluent continuous emission monitoring system:

(i) A 7-day calibration error test, where, for the SO_2-diluent system, this test is performed separately on each component monitor;

(ii) A linearity check, where, for the SO_2 diluent system, this check is performed separately on each component monitor;

(iii) A relatively accuracy test audit; and

(iv) A cycle-time test.

(6) The owner or operator shall ensure that certification or recertification of a continuous opacity monitor for use under the Acid Rain Program is conducted according to one of the following procedures:

(i) Performance of the tests for certification or recertification, according to the requirements of Performance Specification 1 in appendix B to part 60 of this chapter.

(ii) A continuous opacity monitoring system tested and certified previously under State or other Federal requirements to meet the requirements of Performance Specification 1 shall be deemed certified for the purposes of this part.

(7) For the automated data acquisition and handling system, tests designed to verify:

(i) Proper computation of hourly averages for pollutant concentrations, flow rate, pollutant emission rates, and pollutant mass emissions; and

(ii) Proper computation and application of the missing data substitution procedures in subpart D of this part and the bias adjustment factors in Section 7 of appendix A to this part.

(8) The owner or operator shall provide, or cause to be provided, adequate facilities for certification or recertification testing that include:

(i) Sampling ports adequate for test methods applicable to such facility, such that:

(A) Volumetric flow rate, pollutant concentration, and pollutant emission rates can be accurately determined by applicable test methods and procedures; and

(B) A stack or duct free of cyclonic flow during performance tests is available, as demonstrated by applicable test methods and procedures.

(ii) Basic facilities (e.g., electricity) for sampling and testing equipment.

(d) *Certification/recertification procedures for optional backup continuous emission monitoring systems*—(1) *Redundant backups.* The owner or operator of an optional redundant backup continuous emission monitoring system shall comply with all the requirements for initial certification and recertification according to the procedures specified in paragraphs (a), (b), and (c) of this section. The owner or operator shall operate the redundant backup continuous emission monitoring system during all periods of unit operation, except for periods of calibration, quality assurance, maintenance, or repair. The owner or operator shall perform upon the redundant backup continuous emission monitoring system all quality assurance and quality control procedures specified in appendix B of this part.

(2) *Non-redundant backups.* The owner or operator of an optional non-redundant backup continuous emission monitoring system shall comply with all the requirements for initial certification and recertification according to the procedures specified in paragraphs (a), (b) and (c) of this section for each non-redundant backup continuous emission monitoring system, except that: the owner or operator of a non-redundant backup continuous emission monitoring system may omit the 7-day calibration error test for certification or recertification of an SO_2 pollutant concentration monitor, flow monitor, NO_X pollutant concentration monitor, or diluent gas monitor, provided the non-redundant backup system is not used for reporting on any affected unit for more than 720 hours in any calendar year. In addition, the owner or operator shall ensure that the certified non-redundant backup continuous emission monitoring system passes a linearity check (for pollutant concentration monitors) or a calibration error test (for flow monitors) prior to each use for recording and reporting emissions and complies with the daily and quarterly quality assurance and quality control requirements in appendix B of this part for each day and quarter that the non-redundant backup monitoring system is used to report data. If the owner or operator does not perform semi-annual or annual relative accuracy test audits upon the non-redundant backup continuous emission monitoring system, then the owner or operator shall recertify the non-redundant continuous emission monitoring system once every two calendar years, performing all certification tests applicable under this paragraph. However, if a non-redundant backup system is used for reporting data from any affected unit or common stack for more than 720 hours in any one calendar year, then reported data after the first 720 hours is not valid, quality-assured data unless the owner or operator has ensured that the non-redundant backup monitoring system has also passed the 7-day calibration error test, before data

is recorded for any period in excess of 720 hours for that calendar year for that monitoring system.

(3) *Reference method backups.* A monitoring system that is operated as a reference method backup system pursuant to the reference method requirements of Methods 2, 6C, 7E, or 3A in appendix A of part 60 of this chapter need not perform and pass the certification tests required by paragraph (c) of this section prior to its use pursuant to this paragraph.

(e) *Certification/recertification procedures for either peaking unit or by-pass stack/duct continuous emission monitoring systems.* The owner or operator of either a peaking unit or by-pass stack/duct continuous emission monitoring system shall comply with all the requirements for certification or recertification according to the procedures specified in paragraphs (a), (b), and (c) of this section, except as follows: the owner or operator need only perform one nine-run relative accuracy test audit for certification or recertification of a flow monitor installed on the by-pass stack/duct or on the stack/duct used only by affected peaking unit(s). The relative accuracy test audit shall be performed during normal operation of the peaking unit(s) or the by-pass stack/duct.

(f) *Certification/recertification procedures for alternative monitoring systems.* The designated representative representing the owner or operator of each alternative monitoring system approved by the Administrator as equivalent to or better than a continuous emission monitoring system according to the criteria in subpart E of this part shall apply for certification to the Administrator prior to use of the system under the Acid Rain Program, and shall apply for recertification to the Administrator following a replacement, modification, or change according to the procedures in paragraph (c) of this section. The owner or operator of an alternative monitoring system shall comply with the notification and application requirements for certification or recertification according to the procedures specified in paragraphs (a) and (b) of this section.

(1) The Administrator will publish each request for initial certification of an alternative monitoring system in the FEDERAL REGISTER and, following a public comment period of 60 days, will issue a notice of approval or disapproval.

(2) No alternative monitoring system shall be authorized by the Administrator in a permit issued pursuant to part 72 of this chapter unless approved by the Administrator in accordance with this part.

(g) *Certification procedures for excepted monitoring systems under appendices D and E.* The owner or operator of a gas-fired unit, oil-fired unit, or diesel-fired unit using the optional protocol under appendix D or E of this part shall ensure that an excepted monitoring system under appendix D or E of this part meets the applicable general operating requirements of § 75.10, the applicable requirements of appendices D and E to this part, and the certification requirements of this paragraph.

(1) *Certification testing.* The owner or operator shall use the following procedures for certification of an excepted monitoring system under appendix D or E of this part.

(i) When the optional SO_2 mass emissions estimation procedure in appendix D of this part or the optional NO_X emissions estimation protocol in appendix E of this part is used, the owner or operator shall provide data from a calibration test for each fuel flowmeter according to the appropriate calibration procedures using one of the following standard methods: ASME MFC–3M–1989 with September 1990 Errata, ''Measurement of Fluid Flow in Pipes Using Orifice, Nozzle, and Venturi'', ASME MFC–4M–1986 (Reaffirmed 1990) ''Measurement of Gas Flow by Turbine Meters'', ASME MFC–5M–1985 ''Measurement of Liquid Flow in Closed Conduits Using Transit-Time Ultrasonic Flowmeters'', ASME MFC–6M–1987 with June 1987 Errata, ''Measurement of Fluid Flow in Pipes Using Vortex Flow Meters'', ASME MFC–7M–1987 (Reaffirmed 1992), ''Measurement of Gas Flow by Means of Critical Flow Venturi Nozzles'', ASME MFC–9M–1988 with December 1989 Errata, ''Measurement of Liquid Flow in Closed Conduits by Weighing Method'', ISO 8316: 1987(E) ''Measurement of Liquid Flow in Closed Conduits—Method by Collection

of the Liquid in a Volumetric Tank'', or American Gas Association Report No. 3: Orifice Metering of Natural Gas and Other Related Hydrocarbon Fluids Part 1: General Equations and Uncertainty Guidelines (October 1990 Edition), Part 2: Specification and Installation Requirements (February 1991 Edition) and Part 3: Natural Gas Applications (August 1992 Edition), excluding the modified calculation procedures of Part 3, as required by appendices D and E of this part (all methods incorporated by reference under §75.6). The Administrator may also approve other procedures that use equipment traceable to National Institute of Standards of Technology (NIST) standards. The designated representative shall document the procedure and the equipment used in the monitoring plan for the unit and in a petition submitted in accordance with §75.66(c).

(ii) For the automated data acquisition and handling system used under either the optional SO_2 mass emissions estimation procedure in appendix D of this part or the optional NO_X emissions estimation protocol in appendix E of this part, the owner or operator shall perform tests designed to verify:

(A) The proper computation of hourly averages for pollutant concentrations, fuel flow rates, emission rates, heat input, and pollutant mass emissions; and

(B) Proper computation and application of the missing data substitution procedures in appendix D or E of this part.

(iii) When the optional NO_X emissions protocol in appendix E is used, the owner or operator shall complete all initial performance testing under section 2.1 of appendix E.

(2) *Certification testing notification.* The designated representative shall provide initial certification testing notification and periodic retesting notification for an excepted monitoring system under appendix E of this part as specified in §75.61. The designated representative shall submit recertification testing notification as specified in §75.61 for quality assurance/quality control-related NO_X emission rate testing under section 2.3 of appendix E of this part for an excepted monitoring system under appendix E of this part. Certification testing notification or periodic retesting notification is not required for testing of a fuel flowmeter or testing for an excepted monitoring system under appendix D of this part.

(3) *Monitoring plan.* The designated representative shall submit an initial monitoring plan in accordance with §75.62(a).

(4) *Certification application.* The designated representative shall submit a certification application in accordance with §§75.60 and 75.63.

(5) *Provisional approval of certification applications.* Upon the successful completion of the required certification procedures for each excepted monitoring system under appendix D or E of this part, each excepted monitoring system under appendix D or E of this part shall be deemed provisionally certified for use under the Acid Rain Program during the period for the Administrator's review. The provisions for the certification application formal approval process in paragraph (a)(4) of this section shall apply. Data measured and recorded by a provisionally certified excepted monitoring system under appendix D or E of this part, will be considered quality-assured data from the date and time of completion of the final certification test, provided that the Administrator does not revoke the provisional certification by issuing a notice of disapproval within 120 days of receipt of the complete certification application in accordance with the provisions in paragraph (a)(4) of this section.

[58 FR 3701, Jan. 11, 1993, as amended at 60 FR 26524, May 17, 1995; 60 FR 40296, Aug. 8, 1995]

§75.21 Quality assurance and quality control requirements.

(a) *Continuous emission monitoring systems.* The owner or operator of an affected unit shall operate, calibrate, and maintain each continuous emission monitoring system used under the Acid Rain Program according to the quality assurance and quality control procedures in appendix B of this part. The provisions in this paragraph are suspended from July 17, 1995 through December 31, 1996.

(b) *Continuous opacity monitoring systems.* The owner or operator of an affected unit shall operate, calibrate, and maintain each continuous opacity monitoring system used under the Acid Rain Program according to the procedures specified for State Implementation Plans, pursuant to part 51, appendix M of this chapter.

(c) *Calibration gases.* The owner or operator shall ensure that all calibration gases used to quality assure the operation of the instrumentation required by this part shall meet the definition in § 72.2 of this chapter.

(d) [Reserved]

(e) *Consequences of audits.* The owner or operator shall invalidate data from a continuous emission monitoring system or continuous opacity monitoring system upon failure of an audit under paragraph (a)(1)(iv) of § 75.20, under appendix B of this part, or any other audit, beginning with the unit operating hour of completion of a failed audit as determined by the Administrator. The owner or operator shall not use invalidated data for reporting emissions or heat input, nor for calculations of monitor data availability.

(1) *Audit decertification.* Whenever both: an audit (including audits required under appendix B of this part) of a continuous emission or opacity monitoring system or component thereof, including the data acquisition and handling system, and a review of the initial certification application or recertification application, reveal that any continuous emission or opacity monitoring system or component should not have been certified because it did not meet a particular performance specification or other requirement of this part both at the time of the certification application submission and at the time of the audit, the Administrator will issue a notice of disapproval of the certification status of such system or component. By issuing the notice of disapproval, the certification status is revoked, prospectively, by the Administrator. The data measured and recorded by each continuous emission or opacity monitoring system shall not be considered valid quality-assured data from the date of issuance of the notification of the revoked certification status until the date and time that the owner or operator completes subsequently approved certification tests. The owner or operator shall follow the procedures for loss of certification in § 75.20(a)(5) for initial certification or § 75.20(b)(3) for recertification to replace, prospectively, all of the invalid, non-quality-assured data for each disapproved continuous emission or opacity monitoring system.

(2) *Out-of-control period.* Whenever a continuous emission monitoring system or continuous opacity monitoring system fails a periodic quality assurance audit, an audit under § 75.20(a)(1)(iv), a field audit from EPA personnel or other audit, the system is out-of-control. The owner or operator shall follow the procedures for out-of-control periods in § 75.24.

(f) *Continuous emission monitoring systems.* The owner or operator of an affected unit shall operate, calibrate, and maintain each primary and redundant backup continuous emission monitoring system used under the Acid Rain Program according to the quality assurance and quality control procedures in appendix B of this part. The owner or operator of an affected unit shall ensure that each non-redundant backup continuous emission monitoring system used under the Acid Rain Program complies with the daily and quarterly quality assurance and quality control procedures in appendix B of this part for each day and quarter that the system is used to report data. The owner or operator shall perform quality assurance upon a reference method backup monitoring system according to the requirements of Method 2, 6C, 7E, or 3A in appendix A of part 60 of this chapter, instead of the procedures specified in appendix B of this part. Notwithstanding the provisions of appendix B of this part, the owner or operator of a unit with an SO_2 continuous emission monitoring system is not required to perform daily or quarterly assessments under appendix B of this part on any day or in any calendar quarter during which the unit combusts only natural gas or a gaseous fuel with a sulfur content no greater than natural gas. In addition, any calendar quarter during which the unit combusts only natural gas or a gaseous fuel with a sulfur content no greater than

natural gas shall be excluded in determining the calendar quarter, bypass operating quarter, or unit operating quarter when the next relative accuracy test audit must be performed for the SO_2 continuous emission monitoring system, provided that a relative accuracy test audit is performed on that system at least once every two calendar years. The owner or operator of a unit using a certified flow monitor and a certified diluent monitor and Equation F–23 to calculate SO_2 emissions shall meet all quality control and quality assurance requirements in appendix B of this part for the flow monitor and the diluent monitor.

[58 FR 3701, Jan. 11, 1993, as amended at 60 FR 26527, 26566, May 17, 1995; 61 FR 25582, May 22, 1996]

EFFECTIVE DATE NOTES: 1. At 60 FR 26560, 26566, May 17, 1995, § 75.21(a) was temporarily suspended, effective July 17, 1995 through December 31, 1996.

2. At 60 FR 26560, 26566, May 17, 1995, § 75.21(f) was temporarily added, effective July 17, 1995 through December 31, 1996.

§ 75.22 Reference test methods.

(a) The owner or operator shall use the following methods included in appendix A to part 60 of this chapter to conduct monitoring system tests for certification or recertification of continuous emission monitoring systems and excepted monitoring systems under appendix E of this part and quality assurance and quality control procedures.

(1) Methods 1 or 1A are the reference methods for selection of sampling site and sample traverses.

(2) Methods 2, 2A, 2C, or 2D are the reference methods for determination of volumetric flow.

(3) Methods 3, 3A, or 3B are the reference methods for the determination of the dry molecular weight O_2 and CO_2 concentrations in the emissions.

(4) Method 4 is the reference method for the determination of moisture in the stack.

(5) Methods 6, 6A, 6B or 6C, and 7, 7A, 7C, 7D or 7E, as applicable, are the reference methods for determining SO_2 and NO_X pollutant concentrations. (Methods 6A and 6B may also be used to determine SO_2 emission rate in lb/mmBtu. Methods 7, 7A, 7C, 7D, or 7E must be used to measure total NO_X emissions, both NO and NO_2, for purposes of this part. The owner or operator shall not use the exception in section 5.1.2 of Method 7E.)

(6) Method 20 is the reference method for determining NO_X and diluent emissions from stationary gas turbines for testing under appendix E of this part.

(b) The owner or operator may use the following methods in Appendix A of part 60 of this chapter as a reference method backup monitoring system to provide quality-assured monitor data:

(1) Method 3A for determining O_2 or CO_2 concentration;

(2) Method 6C for determining SO_2 concentration;

(3) Method 7E for determining total NO_X concentration (both NO and NO_2); and

(4) Method 2 for determining volumetric flow. The sample point(s) for reference methods shall be located according to the provisions of section 6.5.5 of appendix A of this part.

(c) (1) Performance tests shall be conducted and data reduced in accordance with the test methods and procedures of this part unless the Administrator:

(i) Specifies or approves, in specific cases, the use of a reference method with minor changes in methodology;

(ii) Approves the use of an equivalent method; or

(iii) Approves shorter sampling times and smaller sample volumes when necessitated by process variables or other factors.

(2) Nothing in this paragraph shall be construed to abrogate the Administrator's authority to require testing under Section 114 of the Act.

[58 FR 3701, Jan. 11, 1993, as amended at 60 FR 26528, May 17, 1995]

§ 75.23 Alternatives to standards incorporated by reference.

(a) The designated representative of a unit may petition the Administrator for an alternative to any standard incorporated by reference and prescribed in this part in accordance with § 75.66(c).

(b) [Reserved]

[60 FR 26528, May 17, 1995]

§ 75.24 Out-of-control periods.

(a) If an out-of-control period occurs to a monitor or continuous emission monitoring system, the owner or operator shall take corrective action and repeat the tests applicable to the ''out-of-control parameter'' as described in appendix B of this part.

(1) For daily calibration error tests, an out-of-control period occurs when the calibration error of a pollutant concentration monitor exceeds 5.0 percent based upon the span value, the calibration error of a diluent gas monitor exceeds 1.0 percent O_2 or CO_2, or the calibration error of a flow monitor exceeds 6.0 percent based upon the span value, which is twice the applicable specification in Appendix A to this part.

(2) For quarterly linearity checks, an out-of-control period occurs when the error in linearity at any of three gas concentrations (low, mid-range, and high) exceeds the applicable specification in appendix A to this part.

(3) For relative accuracy test audits, an out-of-control period occurs when the relative accuracy exceeds the applicable specification in Appendix A to this part.

(b) When a monitor or continuous emission monitoring system is out-of-control, any data recorded by the monitor or monitoring system are not quality-assured and shall not be used in calculating monitor data availabilities pursuant to § 75.32 of this part.

(c) When a monitor or continuous emission monitoring system is out-of-control, the owner or operator shall take one of the following actions until the monitor or monitoring system has successfully met the relevant criteria in appendices A and B of this part as demonstrated by subsequent tests:

(1) Apply the procedures for missing data substitution to emissions from affected unit(s); or

(2) Use a certified backup or certified portable monitor or monitoring system or a reference method for measuring and recording emissions from the affected unit(s); or

(3) Adjust the gas discharge paths from the affected unit(s) with emissions normally observed by the out-of-control monitor or monitoring system so that all exhaust gases are monitored by a certified monitor or monitoring system meeting the requirements of appendices A and B of this part.

(d) When the bias test indicates that an SO_2 monitor, volumetric flow monitor, or NO_X continuous emission monitoring system is biased low (i.e., the arithmetic mean of the differences between the reference method value and the monitor or monitoring system measurements in a relative accuracy test audit exceed the bias statistic in section 7 of appendix A to this part), the owner or operator shall adjust the monitor or continuous emission monitoring system to eliminate the cause of bias such that it passes the bias test or calculate and use the bias adjustment factor as specified in section 2.3.3 of appendix B to this part and in accordance with § 75.7.

(e) The owner or operator shall determine if a continuous opacity monitoring system is out-of-control and shall take appropriate corrective actions according to the procedures specified for State Implementation Plans, pursuant to appendix M of part 51 of this chapter. The owner or operator shall comply with the monitor data availability requirements of the State. If the State has no monitor data availability requirements for continuous opacity monitoring systems, then the owner or operator shall comply with the monitor data availability requirements as stated in the data capture provisions of appendix M, part 51 of this chapter.

[58 FR 3701, Jan. 11, 1993, as amended at 60 FR 26528, May 17, 1995]

Subpart D—Missing Data Substitution Procedures

§ 75.30 General provisions.

(a) Except as provided in § 75.34, the owner or operator shall provide substitute data for each affected unit using a continuous emission monitoring system according to the missing data procedures in this subpart whenever the unit combusts any fuel and:

(1) A valid, quality-assured hour of SO_2 concentration data (in ppm) has not been measured and recorded for an affected unit by a certified SO_2 pollutant concentration monitor, or by an

approved alternative monitoring method under subpart E of this part, except as provided in paragraph (d) of this section; or

(2) A valid, quality-assured hour of flow data (in scfh) has not been measured and recorded for an affected unit from a certified flow monitor, or by an approved alternative monitoring system under subpart E of this part; or

(3) A valid, quality-assured hour of NO_X emission rate data (in lb/mmBtu) has not been measured and recorded for an affected unit by a certified NO_X continuous emission monitoring system, or by an approved alternative monitoring system under subpart E of this part; or

(4) A valid, quality-assured hour of CO_2 concentration data (in percent CO_2, or percent O_2 converted to percent CO_2 using the procedures in appendix F of this part) has not been measured and recorded for an affected unit by a certified CO_2 continuous emission monitoring system, or by an approved alternative monitoring method under subpart E of this part.

(b) However, the owner or operator shall have no need to provide substitute data according to the missing data procedures in this subpart if the owner or operator uses SO_2 or CO_2 (or O_2) concentration, flow, or NO_X emission rate data recorded from either a certified redundant or non-redundant backup continuous emission monitor or a backup reference method monitoring system when the certified primary monitor is not operating or out-of-control. A redundant or non-redundant backup continuous emission monitoring system must have been certified according to the procedures in § 75.20 prior to the missing data period. Non-redundant backup continuous emission monitoring system must pass a linearity check (for pollutant concentration monitors) or a calibration error test (for flow monitors) prior to each period of use of the certified backup monitor for recording and reporting emissions. Use of a certified backup monitoring system or backup reference method monitoring system is optional and at the discretion of the owner or operator.

(c) When the certified primary monitor is not operating or out-of-control, then data recorded for an affected unit from a certified backup continuous emission monitor or backup reference method monitoring system are used, as if such data were from the certified primary monitor, to calculate monitor data availability in § 75.32, and to provide the quality-assured data used in the missing data procedures in §§ 75.31 and 75.33, such as the ''hour after'' value.

(d) On or after January 1, 1997, the owner or operator shall comply with the provisions of this paragraph. Prior to January 1, 1997, the owner or operator may comply with the provisions of this paragraph (d) if also complying with the provisions of § 75.11(e).

(1) Whenever a unit with an SO_2 continuous emission monitoring system combusts only pipeline natural gas and the owner or operator is using the procedures in section 7 of appendix F of this part to determine SO_2 mass emissions pursuant to § 75.11(e), the owner or operator shall substitute for missing data from a flow monitoring system, CO_2 diluent monitor or O_2 diluent monitor using the missing data substitution procedures in § 75.36.

(2) Whenever a unit with an SO_2 continuous emission monitoring system combusts gas with a sulfur content no greater than natural gas or pipeline natural gas and the owner or operator is using the gas sampling and analysis and fuel flow procedures in appendix D of this part, to determine SO_2 mass emissions pursuant to § 75.11(e), the owner or operator shall substitute for missing data using the missing data procedures in appendix D of this part.

(3) The owner or operator shall not use historical data from an SO_2 pollutant concentration monitor to account for SO_2 emissions due to combustion of gas during missing data periods. In addition, the owner or operator shall not include hours when the unit combusts only natural gas (or a gaseous fuel with sulfur content no greater than that of natural gas) in the availability calculations in § 75.32, nor in the calculations of substitute data using the procedures of either § 75.31 or § 75.33. For the purpose of the missing data and availability procedures for SO_2 pollutant concentration monitors in §§ 75.31 through 75.33 only, all hours during which the unit combusts only natural gas, or a

gaseous fuel with a sulfur content no greater than natural gas, shall be excluded from the definition of ''monitor operating hour,'' ''quality-assured monitor operating hour,'' ''unit operating hour,'' and ''unit operating day.''

(e) On or after January 1, 1997, the owner or operator shall comply with the provisions of this paragraph. Prior to January 1, 1997, the owner or operator may comply with the provisions of this paragraph.

(1) For monitoring of emissions at a unit with multiple stacks or a bypass stack, include only those hours when emissions are passing through the stack or duct in the definitions of ''unit operating hour'' and ''quality-assured monitor operating hour'' for purposes of applying the missing data and availability procedures in §§75.31 through 75.36 to the monitoring system on that stack or duct.

(2) If the proportion of flow going to each stack from a unit with multiple stacks or the proportion of flow going to a bypass stack has changed during the previous 2,160 hours when emissions passed through that stack, then record the maximum flow rate recorded by the flow monitoring system at the corresponding load range during the previous 2,160 hours of quality-assured monitor data when emissions passed through that stack, instead of the value calculated using the missing data substitution procedures in §75.31 or §75.33.

[60 FR 26528, 26566, May 17, 1995]

EFFECTIVE DATE NOTE: At 60 FR 26560, 26566, May 17, 1995, §75.30(d) and (e) were temporarily added and are effective from July 17, 1995 through December 31, 1996.

§75.31 Initial missing data procedures.

(a) During the first 720 quality-assured monitor operating hours following initial certification (i.e., following the date and time of completion of successful certification tests), of the SO_2 and CO_2 (or O_2) pollutant concentration monitor and during the first 2,160 quality-assured monitor operating hours following initial certification of the flow monitor and NO_X continuous emission monitoring system(s), the owner or operator shall provide substitute data required under this subpart according to the procedures in paragraphs (b) and (c) of this section. The owner or operator of a unit shall use these procedures for no longer than three years (26,280 clock hours) following initial certification.

(b) *SO_2* or CO_2 (or O_2) concentration data. For each hour of missing SO_2 or CO_2 concentration data (including CO_2 data converted from O_2 data using the procedures in appendix F of this part) or O_2 concentration data used to calculate heat input, the owner or operator shall calculate the substitute data as follows:

(1) Whenever prior quality-assured data exist, the owner or operator shall substitute, by means of the data acquisition and handling system, the average of the hourly SO_2 or CO_2 (or O_2) concentrations recorded for an affected unit by a certified monitor for the unit operating hour immediately before and the unit operating hour immediately after the missing data period for each hour of missing data.

(2) Whenever no prior quality-assured SO_2 or CO_2 (or O_2) concentration data exist, the owner or operator shall substitute the maximum potential concentration for SO_2 or CO_2 (or minimum O_2 concentration, for determination of heat input), as specified in section 2.1 of appendix A of this part, for each hour of missing data.

(c) *Volumetric flow and NO_x emission rate data.* For each hour of missing volumetric flow or NO_x emission rate data;

(1) Whenever prior quality-assured data exist in the load range corresponding to the operating load at the time the missing data period occurred, the owner or operator shall substitute, by means of the automated data acquisition and handling system, the average hourly flow rate (or NO_x emission rate) recorded for the affected unit by a certified flow monitor (or a certified NO_x continuous emission monitoring system). The flow rate (or NO_x emission rate) shall be calculated from the corresponding load range as determined using the procedure in appendix C of this part.

(2) Whenever no prior quality-assured flow or NO_x emission rate data exist for the corresponding load range, the owner or operator shall substitute the average hourly flow rate or the average

hourly NO_x emission rate at the next higher level load range for which quality-assured data is available, for each hour of missing data.

(3) Whenever no prior quality-assured flow or NO_X emission rate data exist for the corresponding load range, or any higher load range, the owner or operator shall calculate and substitute the maximum potential flow rate or shall substitute the maximum potential NO_X emission rate, as specified in §72.2 of this chapter and section 2.1 of appendix A, for each hour of missing data.

[58 FR 3701, Jan. 11, 1993, as amended at 60 FR 26529, May 17, 1995]

§75.32 Determination of monitor data availability for standard missing data procedures.

(a) Following initial certification, upon completion of the first 720 quality-assured monitor operating hours of the SO_2 or CO_2 (or O_2) pollutant concentration monitor or the first 2,160 quality-assured monitor operating hours of the flow monitor or NO_X continuous emission monitoring system, the owner or operator shall calculate and record, by means of the automated data acquisition and handling system, the percent monitor data availability for the SO_2 and CO_2 (or O_2) pollutant concentration monitor, the flow monitor, the NO_X continuous emission monitoring system as follows:

(1) Prior to completion of 8,760 unit operating hours following initial certification, the owner or operator shall, for the purpose of applying the standard missing data procedures of §75.33, use Equation 8 to calculate, hourly, percent monitor data availability.

$$\text{Percent monitor data availability} = \frac{\text{Total unit operating hours for which quality-assured data were recorded during previous 8,760 unit operating hours}}{8{,}760} \times 100 \qquad \text{(Eq. 9)}$$

(2) Upon completion of 8,760 unit operating hours following initial certification (or, for a unit with less than 8,760 unit operating hours three years (26,280 clock hours) after initial certification, upon completion of three years (26,280 clock hours) following initial certification) and thereafter, the owner or operator shall, for the purpose of applying the standard missing data procedures of §75.33, use Equation 9 to calculate, hourly, percent monitor data availability.

$$\text{Percent monitor data availability} = \frac{\text{Total unit operating hours for which quality-assured data were recorded during previous 8,760 unit operating hours}}{8{,}760} \times 100 \qquad \text{(Eq. 9)}$$

(3) The owner or operator shall include all unit operating hours and all monitor operating hours for which quality-assured data were recorded by a certified primary monitor, a certified backup monitor, a certified portable monitor, and a reference method for that unit, and from an approved alternative monitoring system under subpart E of this part when calculating percent monitor data availability using Equation 8 or 9. The provisions in

this paragraph (a)(3) are suspended from July 17, 1995, through December 31, 1996.

(4) The owner or operator shall include all unit operating hours, and all monitor operating hours for which quality-assured data were recorded by a certified primary monitor, a certified redundant or non-redundant backup monitor, a reference method for that unit, and from an approved alternative monitoring system under subpart E of this part when calculating percent monitor data availability using Equation 8 or 9. The owner or operator shall exclude hours when a unit combusted only natural gas (or gaseous fuel with the same sulfur content as natural gas) from calculations of percent monitor data availability for SO_2 pollutant concentration monitors, as provided in § 75.30(d). No hours from more than three years (26,280 clock hours) earlier shall be used in Equation 8 or 9. When three years from certification have elapsed, replace the words ''since certification'' or ''during previous 8,760 unit operating hours'' with ''in the previous three years'' and replace ''8,760'' with ''total unit operating hours in the previous three years.''

(b) The monitor data availability need not be calculated during the missing data period. The owner or operator shall record the percent monitor data availability for the last hour of each missing data period as the monitor availability used to implement the missing data substitution procedures.

[58 FR 3701, Jan. 11, 1993, as amended at 60 FR 26529, 26567, May 17, 1995]

EFFECTIVE DATE NOTES: 1. At 60 FR 26560, May 17, 1995, § 75.32(a)(3) was temporarily suspended, effective July 17, 1995 through December 31, 1996.

2. At 60 FR 26560, May 17, 1995, § 75.32(a)(4) was temporarily added and is effective from July 17, 1995 through December 31, 1996.

§ 75.33 Standard missing data procedures.

(a) Following initial certification and upon completion of the first 720 quality-assured monitor operating hours of the SO_2 pollutant concentration monitor or the first 2,160 quality-assured monitor operating hours of the flow monitor or NO_x continuous emission monitoring system, the owner or operator shall provide substitute data required under this subpart according to the procedures in paragraphs (b) and (c) of this section and depicted in Table 1 (SO_x) and Table 2 (NO_x, flow). The owner or operator of a unit shall substitute for missing data using only quality-assured monitor operating hours of data from the three years (26,280 clock hours) prior to the date and time of the missing data period.

TABLE 1.—MISSING DATA PROCEDURE FOR SO_2 CEMS

Trigger conditions		Calculation routines	
Availability (percent)	Duration (N) of outage (hours)	Method	Lookback period
95 or more	N≤24	Average	HB/HA.
	N>24	Max. of average	HB/HA.
		Max. of 90th percentile	720 operating hours*.
90 or more, but below 95	N≤8	Average	HB/HA.
	N>8	Max. of average	HB/HA.
		Max. of 95th percentile	720 operating hours*.
Below 90	N >0	Maximum value[1]	720 operating hours*.

HB/HA=hour before and hour after the outage.
*=Quality-assured, monitor operating hours.
[1] Where unit with add-on emission controls can demonstrate that the controls are operating properly, as provided in § 75.34, the unit may, upon approval, use the maximum controlled emission rate from the previous 720 operating hours.

TABLE 2.—MISSING DATA PROCEDURE FOR NO_x AND FLOW CEMS

Trigger conditions		Calculation routines		
Availability (percent)	Duration (N) of outage (hours)	Method	Lookback period	Load ranges
95 or more	N ≤ 24	Average	2160 operating hours*	Yes.
	N > 24	Max of average	HB/HA	No.
		Max of 90th percentile	2160 operating hours*	Yes.

TABLE 2.—MISSING DATA PROCEDURE FOR NO_x AND FLOW CEMS—Continued

Trigger conditions		Calculation routines		
Availability (percent)	Duration (N) of outage (hours)	Method	Lookback period	Load ranges
90 or more, but below 95	N ≤ 8	Average	2160 operating hours*	Yes.
	N > 8	Max of Average	HB/HA	No.
		Max of 95th percentile	2160 operating hours*	Yes.
Below 90	N > 0	Maximum Value[1]	2160 operating hours*	Yes.

HB/HA = hour before and hour after the outage.
* = Quality-assured, monitor operating hours.
Where unit with add-on emission controls can demonstrate that the controls are operating properly, as provided in § 75.34, the unit may, upon approval, use the maximum controlled emission rate from the previous 720 operating hours.

(b) *SO_2 concentration data.* For each hour of missing SO_2 concentration data,

(1) Whenever the monitor data availability is equal to or greater than 95.0 percent, the owner or operator shall calculate substitute data by means of the automated data acquisition and handling system for each hour of each missing data period according to the following procedures:

(i) For a missing data period less than or equal to 24 hours, substitute the average of the hourly SO_2 concentrations recorded by an SO_2 pollutant concentration monitor for the hour before and the hour after the missing data period.

(ii) For a missing data period greater than 24 hours, substitute the greater of:

(A) The 90th percentile hourly SO_2 concentration recorded by an SO_2 pollutant concentration monitor during the previous 720 quality-assured monitor operating hours; or

(B) The average of the hourly SO_2 concentrations recorded by an SO_2 pollutant concentration monitor for the hour before and the hour after the missing data period.

(2) Whenever the monitor data availability is at least 90.0 percent but less than 95.0 percent, the owner or operator shall calculate substitute data by means of the automated data acquisition and handling system for each hour of each missing data period according to the following procedures:

(i) For a missing data period of less than or equal to 8 hours, substitute the average of the hourly SO_2 concentrations recorded by an SO_2 pollutant concentration monitor for the hour before and the hour after the missing data period.

(ii) For a missing data period of more than 8 hours, substitute the greater of:

(A) the 95th percentile hourly SO_2 concentration recorded by an SO_2 pollutant concentration monitor during the previous 720 quality-assured monitor operating hours; or

(B) The average of the hourly SO_2 concentrations recorded by an SO_2 pollutant concentration monitor for the hour before and the hour after the missing data period.

(3) Whenever the monitor data availability is less than 90.0 percent, the owner or operator shall substitute for each hour of each missing data period the maximum hourly SO_2 concentration recorded by an SO_2 pollutant concentration monitor during the previous 720 quality-assured monitor operating hours.

(c) *Volumetric flow and NO_x emission rate data.* For each hour of missing volumetric flow or NO_x emission rate data:

(1) Whenever the monitor or continuous emission monitoring system data availability is equal to or greater than 95.0 percent, the owner or operator shall calculate substitute data by means of the automated data acquisition and handling system for each hour of each missing data period according to the following procedures:

(i) For a missing data period less than or equal to 24 hours, substitute the average hourly flow or NO_x emission rate recorded by a flow monitor or NO_x continuous emission monitoring system during the previous 2,160 quality-assured monitor operating hours at the corresponding unit load range recorded for each missing hour, as determined using the procedure in appendix C to this part.

(ii) For a missing data period greater than 24 hours, substitute the greater of:

(A) The 90th percentile hourly flow or NO_x emission rate recorded by a flow monitor or NO_x continuous emission monitoring system at the corresponding unit load range recorded for each missing hour during the previous 2,160 quality-assured monitor operating hours, as determined using the procedure in appendix C to this part; or

(B) The average of the hourly flow or NO_x emission rate recorded by a flow monitor or NO_x continuous emission monitoring system for the hour before and the hour after the missing data period.

(2) Whenever the monitor or continuous emission monitoring system data availability is at least 90.0 percent but less than 95.0 percent, the owner or operator shall calculate substitute data by means of the automated data acquisition and handling system for each hour of each missing data period according to the following procedures:

(i) For a missing data period of less than or equal to 8 hours, substitute the average hourly flow or NO_x emission rate recorded by a flow monitor or NO_x continuous emission monitoring system at the corresponding unit load range recorded for the missing hour during the previous 2,160 quality-assured monitor operating hours, as determined using the procedure in appendix C to this part.

(ii) For a missing data period greater than 8 hours, substitute the greater of:

(A) The 95th percentile hourly flow or NO_x emission rate recorded by a flow monitor or NO_x continuous emission monitoring system at the corresponding unit load range recorded for the missing hour during the previous 2,160 quality-assured monitor operating hours, as determined using the procedure in appendix C to this part; or

(B) The average of the hourly flow or NO_x emission rate recorded by a flow monitor or NO_x continuous emission monitoring system for the hour before and the hour after the missing data period.

(3) Whenever the monitor data availability is less than 90.0 percent, the owner or operator shall calculate substitute data by means of the automated data acquisition and handling system for each hour of each missing data period by substituting the maximum hourly flow or NO_x emission rate recorded by the flow monitor or NO_x continuous emission monitoring system at the corresponding unit load range recorded for the missing hour during the previous 2,160 quality-assured monitor operating hours, as determined using the procedure in section 2 of appendix C to this part.

(4) Whenever no prior quality-assured flow or NO_x emission rate data exist for the corresponding load range, the owner or operator shall substitute the maximum hourly flow rate or the maximum hourly NO_x emission rate at the next higher level load range for which quality-assured data is available for each hour of missing data.

(5) Whenever no prior quality-assured flow or NO_X emission rate data exist for either the corresponding load range or a higher load range, the owner or operator shall substitute the maximum potential NO_X emission rate or the maximum potential flow rate, as defined in section 2.1 of appendix A of this part.

[58 FR 3701, Jan. 11, 1993, as amended at 60 FR 26529, May 17, 1995; 61 FR 25582, May 22, 1996]

§ 75.34 Units with add-on emission controls.

(a) The owner or operator of an affected unit equipped with add-on SO_2 and/or NO_X emission controls shall use at least one of the following options:

(1) The owner or operator may use the missing data substitution procedures as specified for all affected units in §§ 75.31 through 75.33 for substituting data for each hour where the add-on emission controls are operating within the proper operation range specified in the monitoring plan for the unit. The designated representative shall report the range of add-on emission control operating parameters that indicate proper operation in the unit's monitoring plan and the owner or operator shall record data to verify the proper operation of the SO_2 or NO_X add-on emission controls during each hour, as described in paragraph (d) of this section. In addition, under § 75.64(c) the designated representative shall submit

a certified verification of the proper operation of the SO_2 or NO_X add-on emission control for each missing data period at the end of each quarter.

(2) In addition, the designated representative may petition the Administrator under § 75.66 to replace the maximum recorded value in the last 720 quality-assured monitor operating hours with a value corresponding to the maximum controlled emission rate (an emission rate recorded when the add-on emission controls were operating) recorded during the last 720 quality-assured monitor operating hours. For such a petition, the designated representative must demonstrate that the following conditions are met: the monitor data availability, calculated in accordance with § 75.32, for the affected unit is below 90.0 percent and parametric data establish that the add-on emission controls were operating properly (i.e., within the range of operating parameters provided in the monitoring plan) during the time period under petition.

(3) The designated representative may petition the Administrator under § 75.66 for approval of site-specific parametric monitoring procedure(s) for calculating substitute data for missing SO_2 pollutant concentration and NO_X emission rate data in accordance with the requirements of paragraphs (b) and (c) of this section, and appendix C of this part. The owner or operator shall record the data required in appendix C of this part, pursuant to § 75.51(b) until January 1, 1996, or pursuant to § 75.55(b).

(b) For an affected unit equipped with add-on SO_2 emission controls, the designated representative may petition the Administrator to approve a parametric monitoring procedure, as described in appendix C of this part, for calculating substitute SO_2 concentration data for missing data periods. The owner or operator shall use the procedures in § 75.31, § 75.33, or § 75.34(a) for providing substitute data for missing SO_2 concentration data unless a parametric monitoring procedure has been approved by the Administrator.

(1) Where the monitoring data availability is 90.0 percent or more for an outlet SO_2 pollutant concentration monitor, the owner or operator may calculate substitute data using an approved parametric monitoring procedure.

(2) Where the monitor data availability for an outlet SO_2 pollutant concentration monitor is less than 90.0 percent, the owner or operator shall calculate substitute data using the procedures in § 75.34(a) (1) or (2), even if the Administrator has approved a parametric monitoring procedure.

(c) For an affected unit with NO_X add-on emission controls, the designated representative may petition the Administrator to approve a parametric monitoring procedure, as described in appendix C of this part, in order to calculate substitute NO_X emission rate data for missing data periods. The owner or operator shall use the procedures in § 75.31 or § 75.33 for providing substitute data for missing NO_X emission rate data prior to receiving the Administrator's approval for a parametric monitoring procedure.

(1) Where monitor data availability for a NO_X continuous emission monitoring system is 90.0 percent or more, the owner or operator may calculate substitute data using an approved parametric monitoring procedure.

(2) Where monitor data availability for a NO_X continuous emission monitoring system is less than 90.0 percent, the owner or operator shall calculate substitute data using the procedure in § 75.34(a) (1) or (2), even if the Administrator has approved a parametric monitoring procedure.

(d) The owner or operator shall keep records of information as described in subpart F of this part to verify the proper operation of the SO_2 or NO_X emission controls during all periods of missing data. The owner or operator shall provide these records to the Administrator or to the EPA Regional Office upon request. Whenever such records are not provided or such records do not demonstrate that proper operation of the SO_2 or NO_X add-on emission controls has been maintained in accordance with the range of add-on emission control operating parameters reported in the monitoring plan for the unit, the owner or operator shall substitute the maximum potential NO_X emission rate, as defined in § 72.2 of this chapter, to report the NO_X emission

rate, and either the maximum hourly SO_2 concentration recorded by the inlet monitor during the previous 720 quality assured monitor operating hours, if available, or the maximum potential concentration for SO_2, as defined by section 2.1.1.1 of appendix A of this part, to report SO_2 concentration for each hour of missing data until information demonstrating proper operation of the SO_2 or NO_X emission controls is available.

[60 FR 26567, May 17, 1995]

§ 75.35 Missing data procedures for CO_2 data.

(a) On or after January 1, 1996, the owner or operator of a unit with a CO_2 continuous emission monitoring system shall substitute for missing CO_2 concentration data using the procedures of this section. Prior to January 1, 1996, the owner or operator of a unit with a CO_2 continuous emission monitoring system may substitute for missing CO_2 concentration data using the procedures of this section.

(b) During the first 720 quality-assured monitor operating hours following initial certification (i.e., following the date and time of completion of successful certification tests), of the CO_2 continuous emission monitoring system, the owner or operator shall provide substitute data required under this subpart according to the procedures in paragraph (b) of § 75.31.

(c) Upon completion of the first 720 quality-assured monitor operating hours following initial certification of the CO_2 continuous emission monitoring system, the owner or operator shall provide substitute data for CO_2 concentration or CO_2 mass emissions required under this subpart according to the procedures in paragraphs (c)(1), (c)(2), or (c)(3) of this section, including CO_2 data calculated from O_2 measurements using the procedures in appendix F of this part.

(1) Whenever a quality-assured monitoring operating hour of CO_2 concentration data has not been obtained and recorded for a period less than or equal to 72 hours or for a missing data period where the percent monitor data availability for the CO_2 continuous emission monitoring system as of the last unit operating hour of the previous calendar quarter was greater than or equal to 90.0 percent, then the owner or operator shall substitute the average of the recorded CO_2 concentration for the hour before and the hour after the missing data period for each hour in each missing data period.

(2) Whenever no quality-assured CO_2 concentration data are available for a period of 72 consecutive unit operating hours or more, the owner or operator shall begin substituting CO_2 mass emissions calculated using the procedures in appendix G of this part beginning with the seventy-third hour of the missing data period until quality-assured CO_2 concentration data are again available. The owner or operator shall use the CO_2 concentration from the hour before the missing data period to substitute for hours 1 through 72 of the missing data period.

(3) Whenever no quality-assured CO_2 concentration data are available for a period where the percent monitor data availability for the CO_2 continuous emission monitoring system as of the last unit operating hour of the previous calendar quarter was less than 90.0 percent, the owner or operator shall substitute CO_2 mass emissions calculated using the procedures in appendix G of this part for each hour of the missing data period until quality-assured CO_2 concentration data are again available.

[60 FR 26529, May 17, 1995]

§ 75.36 Missing data procedures for heat input.

(a) On or after January 1, 1996, the owner or operator of a unit monitoring heat input with a CO_2 or O_2 pollutant concentration monitor and a flow monitoring system shall substitute for missing heat input data using the procedures of this section. Prior to January 1, 1996, the owner or operator of a unit monitoring heat input with a CO_2 or O_2 pollutant concentration monitor and a flow monitoring system may substitute for missing heat input data using the procedures of this section.

(b) During the first 720 quality-assured monitor operating hours following initial certification (i.e., following the date and time of completion of successful certification tests), of the CO_2 or O_2 pollutant concentration monitor

and during the first 2,160 quality-assured monitoring operating hours following initial certification of the flow monitor, the owner or operator shall provide substitute data for heat input calculated under section 5.2 of appendix F of this part by substituting the CO_2 or O_2 concentration measured or substituted according to paragraph (b) of §75.31, and by substituting the flow rate measured or substituted according to §75.31.

(c) Upon completion of the first 720 quality-assured monitor operating hours following initial certification of the CO_2 (or O2) pollutant concentration monitor, the owner or operator shall provide substitute data for CO_2 or O_2 concentration to calculate heat input or shall substitute heat input determined under appendix F of this part according to the procedures in paragraphs (c)(1), (c)(2), or (c)(3) of this section. Upon completion of 2,160 quality-assured monitor operating hours following initial certification of the flow monitor, the owner or operator shall provide substitute data for volumetric flow according to the procedures in §75.33 in order to calculate heat input, unless required to determine heat input using the fuel sampling procedures in appendix F of this part under paragraphs (c)(1), (c)(2) or (c)(3) of this section.

(1) Whenever a quality-assured monitor operating hour of CO_2 or O_2 concentration data has not been obtained and recorded for a period less than or equal to 72 hours or for a missing data period where the percent monitor data availability for the CO_2 or O_2 pollutant concentration monitor as of the last unit operating hour of the previous calendar quarter was greater than or equal to 90.0 percent, the owner or operator shall substitute the average of the recorded CO_2 or O_2 concentration for the hour before and the hour after the missing data period for each hour in each missing data period to calculate heat input.

(2) Whenever a quality-assured monitor operating hour of CO_2 or O_2 concentration data has not been obtained and recorded for a period of 72 consecutive unit operating hours or more, the owner or operator shall begin substituting heat input calculated using the procedures in section 5.5 of appendix F of this part beginning with the seventy-third hour of the missing data period until quality-assured CO_2 or O_2 concentration data are again available. The owner or operator shall use the CO_2 or O_2 concentration from the hour before the missing data period to substitute for hours 1 through 72 of the missing data period.

(3) Whenever no quality-assured CO_2 or O_2 concentration data are available for a period where the percent monitor data availability for the CO_2 continuous emission monitoring system (or O_2 diluent monitor) as of the last unit operating hour of the previous calendar quarter was less than 90.0 percent, the owner or operator shall substitute heat input calculated using the procedures in section 5.5 of appendix F of this part for each hour of the missing data period until quality-assured CO_2 or O_2 concentration data are again available.

(d) For a unit that has no diluent monitor certified during the period between the certification deadline in §75.4(a) for flow monitoring systems and the certification deadline in §75.4(a) for NO_X and CO_2 continuous emission monitoring systems, the owner or operator shall calculate heat input using the procedures in section 5.5 of appendix F of this part until quality-assured data are available from both a flow monitor and a diluent monitor.

[60 FR 26530, May 17, 1995]

Subpart E—Alternative Monitoring Systems

§75.40 General demonstration requirements.

(a) The owner or operator of an affected unit, or the owner or operator of an affected unit and representing a class of affected units which meet the criteria specified in §75.47, required to install a continuous emission monitoring system may apply to the Administrator for approval of an alternative monitoring system (or system component) to determine average hourly emission data for SO_2, NO_x, and/or volumetric flow by demonstrating that the alternative monitoring system has

the same or better precision, reliability, accessibility, and timeliness as that provided by the continuous emission monitoring system.

(b) The requirements of this subpart shall be met by the alternative monitoring system when compared to a contemporaneously operating, fully certified continuous emission monitoring system or a contemporaneously operating reference method, where the appropriate reference methods are listed in § 75.22.

§ 75.41 Precision criteria.

(a) *Data collection and analysis.* To demonstrate precision equal to or better than the continuous emission monitoring system, the owner or operator shall conduct an F-test, a correlation analysis, and a t-test for bias as described in this section. The t-test shall be performed only on sample data at the normal operating level and primary fuel supply, whereas the F-test and the correlation analysis must be performed on each of the data sets required under paragraphs (a)(4) and (a)(5) of this section. The owner or operator shall collect and analyze data according to the following requirements:

(1) Data from the alternative monitoring system and the continuous emission monitoring system shall be collected and paired in a manner that ensures each pair of values applies to hourly average emissions during the same hour.

(2) An alternative monitoring system that directly measures emissions shall have probes or other measuring devices in locations that are in proximity to the continuous emission monitoring system and shall provide data on the same parameters as those measured by the continuous emission monitoring system. Data from the alternative monitoring system shall meet the statistical tests for precision in paragraph (c) of this section and the t-test for bias in appendix A of this part.

(3) An alternative monitoring system that indirectly quantifies emission values by measuring inputs, operating characteristics, or outputs and then applying a regression or another quantitative technique to estimate emissions, shall meet the statistical tests for precision in paragraph (c) of this section and the t-test for bias in Appendix A of this part.

(4) For flow monitor alternatives, the alternative monitoring system must provide sample data for each of three different exhaust gas velocities while the unit or units, if more than one unit exhausts into the stack or duct, is burning its primary fuel at:

(i) A frequently used low operating level, selected within the range between the minimum safe and stable operating level and 50 percent of the maximum operating level,

(ii) A frequently used high operating level, selected within the range between 80 percent of the maximum operating level and the maximum operating level, and

(iii) The normal operating level, or an evenly spaced intermediary level between low and high levels used if the normal operating level is within a specified range (10.0 percent of the maximum operating level), of either paragraphs (a)(4) (i) or (ii) of this section.

(5) For pollutant concentration monitor alternatives, the alternative monitoring system shall provide sample data for the primary fuel supply and for all alternative fuel supplies that have significantly different sulfur content.

(6) For the normal unit operating level and primary fuel supply, paired hourly sample data shall be provided for at least 90.0 percent of the hours during 720 unit operating hours. For each of the remaining two operating levels for flow monitor alternatives, and for each alternative fuel supply for pollutant concentration monitor alternatives, paired hourly sample data shall be provided for at least 24 successive unit operating hours.

(7) The owner or operator shall not use missing data substitution procedures to provide sample data.

(8) If the collected data meet the requirements of the F-test, the correlation test, and the t-test at one or more, but not all, of the operating levels or fuel supplies, the owner or operator may elect to continue collecting the paired data for up to 1,440 additional operating hours and repeat the statistical tests using the data for the entire 30- to 90-day period.

(9) The owner or operator shall provide two separate time series data plots for the data at each operating level or fuel supply described in paragraphs (a)(4) and (a)(5) of this section. Each data plot shall have a horizontal axis that represents the clock hour and calendar date of the readings and shall contain a separate data point for every hour for the duration of the performance evaluation. The data plots shall show the following:

(i) Percentage difference versus time where the vertical axis represents the percentage difference between each paired hourly reading generated by the continuous emission monitoring system (or reference method) and the alternative emission monitoring system as calculated using the following equation:

$$\Delta e = \frac{e_p - e_v}{e_v} \times 100\%$$

(Eq. 10)

where,

Δe=Percentage difference between the readings generated by the alternative monitoring system and the continuous emission monitoring system.

e_p=Measured value from the alternative monitoring system.

e_v=Measured value from the continuous emission monitoring system.

(ii) Alternative monitoring system readings and continuous emission monitoring system (or reference method) readings versus time where the vertical axis represents hourly pollutant concentrations or volumetric flow, as appropriate, and two different symbols are used to represent the readings from the alternative monitoring system and the continuous emission monitoring system (or reference method), respectively.

(b) *Data screening and calculation adjustments.* In preparation for conducting the statistical tests described in paragraph (c) of this section, the owner or operator may screen the data for lognormality and time dependency autocorrelation. If either is detected, the owner or operator shall make the following calculation adjustments:

(1) *Lognormality.* The owner or operator shall conduct any screening and adjustment for lognormality according to the following procedures.

(i) Apply the log transformation to each measured value of either the certified continuous emissions monitoring system or certified flow monitor, using the following equation:

$l_v = \ln e_v$

(Eq. 11)

where,

e_v=Hourly value generated by the certified continuous emissions monitoring system or certified flow monitoring system

l_v=Hourly lognormalized data values for the certified monitoring system

and to each measured value, e_p, of the proposed alternative monitoring system, using the following equation to obtain the lognormalized data values, l_p:

$l_p = \ln e_p$

(Eq. 12)

where,

e_p=Hourly value generated by the proposed alternative monitoring system.

l_p=Hourly lognormalized data values for the proposed alternative monitoring system.

(ii) Separately test each set of transformed data, l_v and l_p, for normality, using the following:

(A) Shapiro-Wilk test;

(B) Histogram of the transformed data; and

(C) Quantile-Quantile plot of the transformed data.

(iii) The transformed data in a data set will be considered normally distributed if all of the following conditions are satisfied:

(A) The Shapiro-Wilk test statistic, W, is greater than or equal to 0.75 or is not statistically significant at α=0.05.

(B) The histogram of the data is unimodal and symmetric.

(C) The Quantile-Quantile plot is a diagonal straight line.

(iv) If both of the transformed data sets, l_v and l_p, meet the conditions for normality, specified in paragraphs

(b)(1)(iii) (A) through (C) of this section, the owner or operator may use the transformed data, l_v and l_p, in place of the original measured data values in the statistical tests for alternative monitoring systems as described in paragraph (c) of this section and in appendix A of this part.

(v) If the transformed data are used in the statistical tests in paragraph (c) of this section and in appendix A of this part, the owner or operator shall provide the following:

(A) Copy of the original measured values and the corresponding transformed data in printed and electronic format.

(B) Printed copy of the test results and plots described in paragraphs (b)(1)(i) through (iii) of this section.

(2) *Time dependency (autocorrelation).* The screening and adjustment for time dependency are conducted according to the following procedures:

(i) Calculate the degree of autocorrelation of the data on their LAG1 values, where the degree of autocorrelation is represented by the Pearson autocorrelation coefficient, ρ, computed from an AR(1) autoregression model, such that:

$$\rho = \frac{COV(x_i', x_i'')}{s_{x_i'} s_{x_i''}}$$

(Eq. 13)

where,

x'_i=The original data value at hour *i*.

x''_i=The LAG1 data value at hour *i*.

$COV(x'_i, x''_i)$=The autocovariance of x'_i and defined by,

$$COV(x_i', x_i'') = \frac{\sum_{i=1}^{n}(x_i'-\bar{x}')(x_i''-\bar{x}'')}{(n-1)}$$

(Eq. 14)

where,

n=The total number of observations in which both the original value, x'_i, and the lagged value, x''_i, are available in the data set.

s'_{xi}=The standard deviation of the original data values, x'_i defined by,

$$s_{x_i'} = \sqrt{\frac{\sum_{i=1}^{n}(x_i'-\bar{x}')^2}{n-1}}$$

(Eq. 15)

where,

s''_{xi}=The standard deviation of the LAG1 data values, x''_i, defined by

$$s_{x_i''} = \sqrt{\frac{\sum_{i=1}^{n}(x_i''-\bar{x}'')^2}{n-1}}$$

(Eq. 16)

where,

x'=The mean of the original data values, x'_i defined by

$$\bar{x}' = \frac{\sum_{i=1}^{n} x_i'}{n}$$

(Eq. 17)

where,

x''=The mean of the LAG1 data values, x''_i, defined by

$$\bar{x}'' = \frac{\sum_{i=1}^{n} x_i''}{n}$$

(Eq. 18)

where,

(ii) The data in a data set will be considered autocorrelated if the autocorrelation coefficient, ρ, is significant at

the 5 percent significance level. To determine if this condition is satisfied, calculate Z using the following equation:

$$Z = 0.5\left[\ln\left(\frac{1+\rho}{1-\rho}\right)\right]\sqrt{n-3}$$

(Eq. 19)

If $Z > 1.96$, then the autocorrelation coefficient, ρ, is significant at the 5 percent significance level ($a = 0.05$).

(iii) If the data in a data set satisfy the conditions for autocorrelation, specified in paragraph (b)(2)(ii) of this section, the variance of the data, S^2, may be adjusted using the following equation:

$S^2_{adj} = VIF \times S^2$

(Eq. 20)

where,

S^2=The original, unadjusted variance of the data set.

VIF=The variance inflation factor, defined by

$$VIF = \frac{1}{\left[1 - \frac{2\rho}{(n-1)(1-\rho)} + \frac{2\rho(1-\rho^n)}{n(n-1)(1-\rho)^2}\right]}$$

(Eq. 21)

S^2_{adj}=The autocorrelation-adjusted variance for the data set.

(iv) The procedures described in paragraphs (b)(2)(i)–(iii) of this section may be separately applied to the following data sets in order to derive distinct autocorrelation coefficients and variance inflation factors for each data set:

(A) The set of measured hourly values, e_v, generated by the certified continuous emissions monitoring system or certified flow monitoring system.

(B) The set of hourly values, e_p, generated by the proposed alternative monitoring system,

(C) The set of hourly differences, $e_v - e_p$, between the hourly values, e_v, generated by the certified continuous emissions monitoring system or certified flow monitoring system and the hourly values, e_p, generated by the proposed alternative monitoring system.

(v) For any data set, listed in paragraph (b)(2)(iv) of this section, that satisfies the conditions for autocorrelation specified in paragraph (b)(2)(ii) of this section, the owner or operator may adjust the variance of that data set, using Equation 20 of this section.

(A) The adjusted variance may be used in place of the corresponding original variance, as calculated using Equation 23 of this section, in the F-test (Equation 24) of this section.

(B) In place of the standard error of the mean,

$$\frac{S_d}{\sqrt{n}}$$

in the bias test Equation A–9 of Appendix A of this part the following adjusted standard error of the mean may be used:

$$\left(\frac{S_d}{\sqrt{n}}\right)_{adj} = \left[\sqrt{\left(\frac{1+\rho}{1-\rho}\right) - \left(\frac{2\rho(1-\rho^n)}{n(1-\rho)^2}\right)}\right] \times \sqrt{VIF} \times \left(\frac{S_d}{\sqrt{n}}\right)$$

where.

$\left(\frac{S_d}{\sqrt{n}}\right)_{adj}$ = The autocorrelation-adjusted standard error of the mean.

(vi) For each data set in which a variance adjustment is used, the owner or operator shall provide the following:

(A) All values in the data set in printed and electronic format.

(B) Values of the autocorrelation coefficient, its level of significance, the variance inflation factor, and the unadjusted original and adjusted values found in Equations 20 and 22 of this section.

(C) Equation and related statistics of the AR(1) autoregression model of the data set.

(D) Printed documentation of the intermediate calculations used to derive the autocorrelation coefficient and the Variance Inflation Factor.

(c) *Statistical Tests.* The owner or operator shall perform the F-test and correlation analysis as described in this paragraph and the t-test for bias described in Appendix A of this part to demonstrate the precision of the alternative monitoring system.

(1) *F-test.* The owner or operator shall conduct the F-test according to the following procedures.

(i) Calculate the variance of the certified continuous emission monitoring system or certified flow monitor as applicable, S_v^2, and the proposed method, S_p^2, using the following equation.

$$S^2 = \frac{\sum_{i=1}^{n}\left(e_i - e_m\right)^2}{n-1}$$

(Eq. 23)

where,

e_i=Measured values of either the certified continuous emission monitoring system or certified flow monitor, as applicable, or proposed method.

e_m=Mean of either the certified continuous emission monitoring system or certified flow monitor, as applicable, or proposed method values.

n=Total number of paired samples.

(ii) Determine if the variance of the proposed method is significantly different from that of the certified continuous emission monitoring system or certified flow monitor, as applicable, by calculating the F-value using the following equation.

$$F = \frac{S_p^2}{S_v^2}$$

(Eq. 24)

Compare the experimental F-value with the critical value of F at the 95-percent confidence level with n–1 degrees of freedom. The critical value is obtained from a table for F-distribution. If the calculated F-value is greater than the critical value, the proposed method is unacceptable.

(2) *Correlation analysis.* The owner or operator shall conduct the correlation analysis according to the following procedures.

(i) Plot each of the paired emissions readings as a separate point on a graph where the vertical axis represents the value (pollutant concentration or volumetric flow, as appropriate) generated by the alternative monitoring system and the horizontal axis represents the value (pollutant concentration or volumetric flow, as appropriate) generated by the continuous emission monitoring system (or reference method). On the graph, draw a horizontal line representing the mean value, e_p, for the alternative monitoring system and a vertical line representing the mean value, e_v, for the continuous emission monitoring system where,

$$\overline{e_p} = \frac{\sum e_p}{n}$$

(Eq. 25)

$$\overline{e_v} = \frac{\sum e_v}{n}$$

(Eq. 26)

where,

e_p=Hourly value generated by the alternative monitoring system.

e_v=Hourly value generated by the continuous emission monitoring system.

n=Total number of hours for which data were generated for the tests.

A separate graph shall be produced for the data generated at each of the operating levels or fuel supplies described in paragraphs (a)(4) and (a)(5) of this section.

(ii) Use the following equation to calculate the coefficient of correlation, r, between the emissions data from the alternative monitoring system and the continuous emission monitoring system using all hourly data for which paired values were available from both monitoring systems.

$$r = \frac{\sum e_p e_v - \left(\sum e_p\right)\left(\sum e_v\right) \quad n}{\left(\left[\sum e_p^2 - \left(\sum e_p\right)^2 \quad n\right]\left[\sum e_p^2 - \left(\sum e_v\right)^2 \quad n\right]\right)^{(1\ 2)}}$$

(Eq. 27)

(iii) If the calculated r-value is less than 0.8, the proposed method is unacceptable.

[58 FR 3701, Jan. 11, 1993, as amended at 60 FR 26530, May 17, 1995; 60 FR 40296, Aug. 8, 1995]

§75.42 Reliability criteria.

To demonstrate reliability equal to or better than the continuous emission monitoring system, the owner or operator shall demonstrate that the alternative monitoring system is capable of providing valid 1-hr averages for 95.0 percent or more of unit operating hours over a 1-yr period and that the system meets the applicable requirements of Appendix B of this part.

§75.43 Accessibility criteria.

To demonstrate accessibility equal to or better than the continuous emission monitoring system, the owner or operator shall provide reports and on-site records of emission data to demonstrate that the alternative monitoring system provides data meeting the requirements of subparts F and G of this part.

§75.44 Timeliness criteria.

To demonstrate timeliness equal to or better than the continuous emission monitoring system, the owner or operator shall demonstrate that the alternative monitoring system can meet the requirements of subparts F and G of this part; can provide a continuous, quality-assured, permanent record of certified emissions data on an hourly basis; and can issue a record of data for the previous day within 24 hours.

§75.45 Daily quality assurance criteria.

The owner or operator shall either demonstrate that daily tests equivalent to those specified in Appendix B of this part can be performed on the alternative monitoring system or demonstrate and document that such tests are unnecessary for providing quality-assured data.

§75.46 Missing data substitution criteria.

The owner or operator shall demonstrate that all missing data can be accounted for in a manner consistent with the applicable missing data procedures in subpart D of this part.

§75.47 Criteria for a class of affected units.

(a) The owner or operator of an affected unit may represent a class of affected units for the purpose of applying

to the Administrator for a class-approved alternative monitoring system.

(b) The owner or operator of an affected unit representing a class of affected units shall provide the following information:

(1) A description of the affected unit and how it appropriately represents the class of affected units;

(2) A description of the class of affected units, including data describing all the affected units which will comprise the class; and

(3) A demonstration that the magnitude of emissions of all units which will comprise the class of affected units are *de minimis.*

(c) If the Administrator determines that the emissions from all affected units which will comprise the class of units are *de minimis,* then the Administrator shall publish notice in the FEDERAL REGISTER, providing a 30-day period for public comment, prior to granting a class-approved alternative monitoring system.

[60 FR 40297, Aug. 8, 1995]

§ 75.48 Petition for an alternative monitoring system.

(a) The designated representative shall submit the following information in the application for certification or recertification of an alternative monitoring system.

(1) Source identification information.

(2) A description of the alternative monitoring system.

(3) Data, calculations, and results of the statistical tests, specified in § 75.41(c) of this part, including:

(i) Date and hour.

(ii) Hourly test data for the alternative monitoring system at each required operating level and fuel type.

(iii) Hourly test data for the continuous emissions monitoring system at each required operating level and fuel type.

(iv) Arithmetic mean of the alternative monitoring system measurement values, as specified in Equation 24 in § 75.41(c) of this part, of the continuous emission monitoring system values, as specified on Equation 25 in § 75.41(c) of this part, and of their differences.

(v) Standard deviation of the difference, as specified in Equation A–8 in appendix A of this part.

(vi) Confidence coefficient, as specified in Equation A–9 in appendix A of this part.

(vii) The bias test results as specified in § 7.6.4 in appendix A of this part.

(viii) Variance of the measured values for the alternative monitoring system and of the measured values for the continuous emissions monitoring system, as specified in Equation 22 in § 75.41(c) of this part.

(ix) F-statistic, as specified in Equation 23 in § 75.41(c) of this part.

(x) Critical value of F at the 95-percent confidence level with n–1 degrees of freedom.

(xi) Coefficient of correlation, r, as specified in Equation 26 in § 75.41(c) of this part.

(4) Data plots, specified in §§ 75.41(a)(9) and 75.41(c)(2)(i) of this part.

(5) Results of monitor reliability analysis.

(6) Results of monitor accessibility analysis.

(7) Results of monitor timeliness analysis.

(8) A detailed description of the process used to collect data, including location and method of ensuring an accurate assessment of operating hourly conditions on a real-time basis.

(9) A detailed description of the operation, maintenance, and quality assurance procedures for the alternative monitoring system as required in appendix B of this part.

(10) A description of methods used to calculate heat input or diluent gas concentration, if applicable.

(11) Results of tests and measurements (including the results of all reference method field test sheets, charts, laboratory analyses, example calculations, or other data as appropriate) necessary to substantiate that the alternative monitoring system is equivalent in performance to an appropriate, certified operating continuous emission monitoring system.

(b) [Reserved]

[60 FR 40297, Aug. 8, 1995]

Subpart F—Recordkeeping Requirements

§75.50 General recordkeeping provisions.

(a) *Recordkeeping requirements for affected sources.* The provisions of this section shall remain in effect prior to January 1, 1996. The owner or operator shall meet the requirements of either §§75.50 or 75.54 prior to January 1, 1996. On or after January 1, 1996, the owner or operator shall meet the requirements of §75.54 only. The owner or operator of any affected source subject to the requirements of this part shall maintain for each affected unit (or for each group of affected or nonaffected units utilizing a common stack and common monitoring systems pursuant to §75.16 through §75.18 of this part (referred to hereafter as ''each affected unit'')) a file of all measurements, data, reports, and other information required by this part at the source in a form suitable for inspection for at least three (3) years from the date of each record. This file shall contain the following information:

(1) The data and information required in paragraphs (b) through (f) of this section;

(2) The component data and information used to calculate values required in paragraphs (b) through (f) of this section;

(3) The current monitoring plan as specified in §75.53 of this part; and

(4) The quality control plan as described in Appendix B of this part.

(b) *Operating parameter record provisions.* The owner or operator shall record hourly the following information on unit operating time, heat input, and load for each affected unit, including individual affected units utilizing a common stack except as provided in paragraph (b)(6) of this section for when units combust gas:

(1) Date and hour;

(2) Unit operating time (rounded to nearest hour);

(3) Total integrated hourly gross unit load (rounded to nearest MW_{ge}) (or steam load in lb/hr at stated temperature and pressure, rounded to the nearest lb/hr, if elected in the monitoring plan);

(4) Operating load range corresponding to total integrated gross load of 1–10, except for units using a common stack, which may use the number of unit load ranges up to 20, specified in the monitoring plan for the common stack;

(5) Total heat input (mmBtu, rounded to the nearest tenth); and

(6) For when units combust gas, the owner or operator may record total heat input (mmBtu, rounded to the nearest tenth) daily.

(c) *SO_2 emission record provisions.* The owner or operator shall record hourly the information required by this paragraph for each affected unit or group of units using a common stack and common monitoring systems, except a gas-fired or oil-fired unit for which the owner or operator is using the optional protocol in appendix D to this part for estimating SO_2 mass emissions:

(1) For SO_2 concentration, as measured and reported from the certified primary monitor, certified back-up or certified portable monitor, or other approved method of emissions determination:

(i) Monitor-channel identification code as provided for in §75.53;

(ii) Date and hour;

(iii) Hourly average SO_2 concentration (ppm, rounded to the nearest tenth),

(iv) Hourly average SO_2 concentration (ppm, rounded to the nearest tenth) adjusted for bias, if bias adjustment factor is required as provided for in §75.24(d) of this part;

(v) Percent monitor data availability (recorded to the nearest tenth of a percent) calculated pursuant to §75.32 of this part; and

(vi) Method of determination for hourly average SO_2 concentration using Codes 1–13 in Table 3 of this section.

(2) For flow as measured and reported from the certified primary monitor, certified back-up or certified portable monitor or other approved method of emissions determination:

(i) Monitor-channel identification code as provided for in §75.53;

(ii) Date and hour;

(iii) Hourly average volumetric flow rate (in scfh, rounded to the nearest thousand);

(iv) Hourly average volumetric flow rate (in scfh, rounded to the nearest thousand) adjusted for bias, if bias adjustment factor required as provided for in § 75.24(d) of this part;

(v) Hourly average moisture content of flue gases (volume fraction) where SO_2 concentration is measured on dry basis;

(vi) Percent monitor data availability, (recorded to the nearest tenth of a percent), calculated pursuant to § 75.32 of this part; and

(vii) Method of determination for hourly average flow rate using Codes 1–13 in Table 3.

(3) For SO_2 mass emissions as measured and reported from the certified primary monitoring system, certified back-up or certified portable monitoring systems, or other approved method of emissions determination:

(i) Date and hour;

(ii) Hourly average SO_2 mass emissions (lb/hr, rounded to the nearest tenth);

(iii) Hourly average SO_2 mass emissions (lb/hr, rounded to the nearest tenth) adjusted for bias, if bias adjustment factor required, as provided for in § 75.24(d); and

(iv) Unique three-digit code identifying emissions formula used to derive hourly SO_2 mass emissions from SO_2 concentration and flow data in paragraphs (c)(1) and (c)(2) of this section as provided for in § 75.53.

TABLE 3.—CODES FOR METHOD OF EMISSIONS AND FLOW DETERMINATION

Code	Hourly emissions/flow measurement or estimation method
1	Certified primary emission/flow monitoring system.
2	Certified back-up or certified portable emission/flow monitoring system.
3	Approved alternative monitoring system.
4	Reference Method: SO_2: Method 6, 6A, 6B, or 6C. Flow: Method 2, 2A, 2C, or 2D. NO_x: Method 7, 7A, 7C, 7D, or 7E. CO_2 or O_2: Method 3, 3A or 3B.
5	For units with add-on SO_2 and/or NO_x emission controls: SO_2 concentration or NO_x emission rate estimate from Agency preapproved parametric monitoring method.
6	Average of the hourly SO_2 concentrations, flow, or NO_x emission rate for the hour before and the hour following a missing data period.
7	Average hourly SO_2 concentration, flow rate, or NO_x emission rate using initial missing data procedures.
8	90th percentile hourly SO_2 concentration, flow rate, or NO_x emission rate.
9	95th percentile hourly SO_2 concentration, flow rate, or NO_x emission rate.
10	Maximum hourly SO_2 concentration, flow rate, or NO_x emission rate.
11	Average hourly flow rate or NO_x emission rate in corresponding load range.
12	Maximum potential concentration of SO_2 maximum potential flow rate, or NO_x emission rate corresponding to maximum potential concentration of NO_x and minimum O_2 or maximum CO_2 concentration, as determined using section 2.1 of appendix A of this part.
13	Other data (specify method).

(d) *NO_x emission record provisions.* The owner or operator shall record hourly the information required by this paragraph for each affected unit, except for a gas-fired peaking unit or oil-fired peaking unit for which the owner or operator is using the optional protocol in appendix E to this part for estimating NO_x emission rate. For each NO_x emission rate as measured and reported from the certified primary monitor, certified back-up or certified portable monitor, or other approved method of emissions determination:

(1) Monitor-channel identification code as provided for in § 75.53;

(2) Date and hour;

(3) Hourly average NO_x concentration (ppm, rounded to the nearest tenth);

(4) Hourly average diluent gas concentration (percent O_2 or percent CO_2, rounded to the nearest tenth);

(5) Hourly average NO_x emission rate (lb/mmBtu, rounded to nearest hundredth);

(6) Hourly average NO_x emission rate (lb/mmBtu, rounded to nearest hundredth) adjusted for bias, if bias adjustment factor is required as provided for in § 75.24(d) of this part;

(7) Percent monitoring system data availability (recorded to the nearest tenth of a percent), calculated pursuant to § 75.32 of this part;

(8) Method of determination for hourly average NO_x emission rate using Codes 1–13 in Table 3; and

(9) Unique three-digit code identifying emissions formula used to derive hourly average NO_x emission rate, as provided for in § 75.53.

(e) *CO_2 emission record provisions.* The owner or operator shall record or calculate CO_2 emissions for each affected unit using one of the following methods specified in this section:

(1) If the owner or operator chooses to use a CO_2 continuous emission monitoring system (or an O_2 continuous emission monitor and flow monitor as specified in appendix F), then the owner or operator shall record hourly the following information for CO_2 mass emissions, as measured and reported from the certified primary monitor, certified back-up or certified portable monitor, or other approved method of emissions determination:

(i) Monitor-channel identification code as provided for in §75.53;

(ii) Date and hour;

(iii) Hourly average CO_2 (or O_2) concentration (in percent, rounded to the nearest tenth);

(iv) Hourly average volumetric flow rate (scfh, rounded to the nearest scf);

(v) Hourly average CO_2 mass emissions (tons/hr, rounded to the nearest tenth);

(vi) Percent monitor data availability (recorded to the nearest tenth of a percent), calculated pursuant to §75.32 of this part;

(vii) Method of determination for hourly average CO_2 mass emissions using Codes 1–13 in Table 3; and

(viii) Unique three-digit emissions formula used to derive hourly average CO_2 mass emissions, as provided for in §75.53.

(2) As an alternative to §75.50(e)(1), the owner or operator may use the procedures in §75.13 and in appendix G to this part, and shall record daily the following information for CO_2 mass emissions:

(i) Date;

(ii) Daily combustion-formed CO_2 mass emissions (tons/day, rounded to the nearest tenth);

(iii) For coal-fired units, flag indicating whether optional procedure to adjust combustion-formed CO_2 mass emissions for carbon retained in flyash has been used and, if so, the adjustment;

(iv) For a unit with a wet flue gas desulfurization system or other controls generating CO_2, daily sorbent-related CO_2 mass emissions (tons/day, rounded to the nearest tenth); and

(v) For a unit with a wet flue gas desulfurization system or other controls generating CO_2, total daily CO_2 mass emissions (tons/day, rounded to the nearest tenth) as sum of combustion-formed emissions and sorbent-related emissions.

(f) *Opacity record provisions.* The owner or operator shall record every six minutes (or other averaging period specified by the State or local air pollution control agency) the information required by this paragraph for each affected unit, except as provided for in §75.14 (b), (c), and (d). The owner or operator shall also keep records of all incidents of opacity monitor downtime during unit operation, including reason(s) for the monitor outage(s) and any corrective action(s) taken for opacity, as measured and reported by the continuous opacity monitoring system:

(1) Monitor-channel identification code;

(2) Date, hour, and minute;

(3) Average opacity of emissions (in percent opacity);

(4) If the average opacity of emissions exceeds the applicable standard, then a code indicating such an exceedance has occurred; and

(5) Percent monitor data availability, recorded to the nearest tenth of a percent, calculated pursuant to §75.32 of this part.

[58 FR 3701, Jan. 11, 1993, as amended at 58 FR 34126, June 23, 1993; 58 FR 40749, July 30, 1993; 61 FR 25582, May 22, 1996]

§75.51 General recordkeeping provisions for specific situations.

(a) *Specific SO_2 emission record provisions for units with qualifying Phase I technology.* In addition to the SO_2 emissions information required in §75.50(c) of this part, from January 1, 1997, through December 31, 1999, the owner or operator shall record the applicable information in this paragraph for each affected unit on which SO_2 emission controls have been installed and operated for the purpose of meeting qualifying Phase I technology requirements pursuant to §72.42 of this chapter and §75.15.

(1) For units with post-combustion emission controls:

(i) Monitor-channel identification codes for each inlet and outlet SO_2-diluent continuous emission monitoring system;

(ii) Date and hour;

(iii) Hourly average inlet SO_2 emission rate (lb/mmBtu, rounded to nearest hundredth);

(iv) Hourly average inlet SO_2 concentration (ppm, rounded to the nearest tenth) adjusted for bias, if bias adjustment factor required (see §75.24(d) of this part);

(v) Hourly average outlet SO_2 emission rate (lb/mmBtu, rounded to nearest hundredth);

(vi) Hourly average outlet SO_2 concentration (ppm, rounded to the nearest tenth) adjusted for bias, if bias adjustment factor required (see §75.24(d) of this part);

(vii) Percent data availability for both inlet and outlet SO_2-diluent continuous emission monitoring systems (recorded to the nearest tenth of a percent), calculated pursuant to Equation 8 of §75.32 (for the first 8,760 unit operating hours following initial certification) and Equation 9 of §75.32, thereafter; and

(viii) Emissions formula used to derive hourly average inlet and outlet SO_2 emission rates for each affected unit or group of units using a common stack.

(2) For units with combustion and/or pre-combustion emission controls:

(i) Monitor-channel identification codes for each outlet SO_2-diluent continuous emission monitoring system;

(ii) Date and hour;

(iii) Hourly average outlet SO_2 emission rate (lb/mmBtu, rounded to nearest hundredth);

(iv) For units with combustion controls, average daily inlet SO_2 emission rate (lb/mmBtu, rounded to nearest hundredth), determined by coal sampling and analysis procedures in appendix F to this part; and

(v) For units with pre-combustion controls (i.e., fuel pretreatment), fuel analysis demonstrating the weight, sulfur content, and gross calorific value of the product and raw fuel lots.

(b) *Specific parametric data record provisions for calculating substitute emissions data for units with add-on emission controls.* In addition to the SO_2 and NO_x emissions data to be recorded under §75.50, the owner or operator of an affected unit with add-on emission controls, where the owner or operator is using the approved site-specific parametric monitoring procedures for calculation of substitute data in accordance with §75.34, shall also record for each hour during each missing data period the applicable information in this paragraph (b):

(1) For units with add-on SO_2 emission controls, for each hour of missing SO_2 concentration or volumetric flow data:

(i) The information required in §75.50(b) of this part for SO_2 concentration and volumetric flow if either one of these monitors is still operating;

(ii) Date and hour;

(iii) Number of operating scrubber modules;

(iv) Feedrate of makeup slurry to each operating scrubber module (gal/min);

(v) Average pressure differential across each operating scrubber module (inches of water column);

(vi) For a unit with a wet flue gas desulfurization system, an inline measure of absorber pH for each operating scrubber module;

(vii) For a unit with a dry flue gas desulfurization system, the inlet and outlet temperatures across each operating scrubber module;

(viii) For a unit with a dry flue gas desulfurization system, the slurry feed rate (gal/min) to the atomizer nozzle; and

(ix) Method of determination of SO_2 concentration and volumetric flow, using Codes 1–13 in Table 3 of §75.50 of this part.

(2) For units with add-on NO_x emission controls, for each hour of missing NO_x emission rate data:

(i) Date and hour;

(ii) Inlet air flow rate (acfh, rounded to the nearest thousand);

(iii) Excess O_2 concentration of flue gas at stack outlet (rounded to nearest tenth of a percent);

(iv) CO concentration of flue gas at stack outlet (ppm, rounded to the nearest tenth);

(v) Temperature of flue gas at furnace exit or economizer outlet duct (°F); and

(vi) Other parameters specific to NO_x emission controls (e.g., average hourly reagent feedrate).

(c) *Specific SO_2 emission record provisions for gas-fired or oil-fired units using optional protocol in appendix D to this part.* In lieu of recording the information in § 75.50(c) of this section, the owner or operator shall record the applicable information in this paragraph for each affected gas-fired or oil-fired unit for which the owner or operator is using the optional protocol in appendix D to this part for estimating SO_2 mass emissions.

(1) When the unit is combusting oil:

(i) Date and hour;

(ii) Hourly flow rate of oil with the units in which oil flow is recorded, (gal/hr, lb/hr, or bbl/hr, rounded to the nearest tenth);

(iii) Sulfur content of daily oil sample, rounded to nearest tenth of a percent;

(iv) Method of oil sampling (flow proportional, continuous drip, or manual);

(v) Mass of oil combusted each hour (lb/hr, rounded to the nearest tenth); and

(vi) Hourly SO_2 mass emissions (lb/hr, rounded to the nearest tenth).

(2) For gas-fired units or oil-fired units using the optional protocol in appendix D of this part of daily manual oil sampling, when the unit is combusting oil, the highest sulfur content recorded from the most recent 30 daily oil samples rounded to nearest tenth of a percent.

(3) When the unit is combusting natural gas:

(i) Date and hour;

(ii) Daily heat input from natural gas according to procedures in appendix F to this part (mmBtu, rounded to the nearest tenth);

(iii) Sulfur content or SO_2 emission rate, in one of the following formats, in accordance with the appropriate procedure from appendix D of this part:

(A) Sulfur content of daily gas sample, (rounded to the nearest 0.1 grains/100 scf) and the volume of gas combusted per day, in 100 scf; or

(B) SO_2 emission rate from NADB (in lb/mmBtu).

(d) *Specific NO_x emission record provisions for gas-fired peaking units or oil-fired peaking units using optional protocol in appendix E of this part.* In lieu of recording the information in paragraph § 75.50(d), the owner or operator shall record the applicable information in this paragraph for each affected gas-fired peaking unit or oil-fired peaking unit for which the owner or operator is using the optional protocol in appendix E to this part for estimating NO_x emission rate.

(1) When the unit is combusting oil:

(i) Date and hour;

(ii) Average hourly fuel flow of oil with the units in which oil flow is recorded (gal/hour or bbl/hour);

(iii) NO_x emission rate F-factor for oil combusted according to procedure in appendix E to this part; and

(iv) Average hourly NO_x emission rate (lb/mmBtu, rounded to nearest tenth).

(2) When the unit is combusting natural gas:

(i) Date and hour;

(ii) Average daily fuel flow of natural gas (million cubic ft);

(iii) NO_x emission rate F-factor for gas combusted according to procedure in appendix E to this part; and

(iv) Average daily NO_x emission rate (lb/mmBtu, rounded to nearest tenth).

[58 FR 3701, Jan. 11, 1993, as amended at 58 FR 40749, July 30, 1993]

§ 75.52 Certification, quality assurance and quality control record provisions.

(a) The owner or operator shall record the applicable information in this section for each certified monitor or certified monitoring system (including certified backup or certified portable monitors) measuring and recording emissions or flow from an affected unit.

(1) For each SO_2 or NO_x pollutant concentration monitor, flow monitor, CO_2 monitor, or diluent gas monitor, the owner or operator shall record the following for all daily and 7-day calibration error tests, including any follow-up tests after corrective action:

(i) Monitor-channel identification code;

(ii) Instrument span;

(iii) Date and hour;

(iv) Reference value (i.e., calibration gas concentration or reference signal value, in ppm or other appropriate units);

(v) Observed value (monitor response during calibration, in ppm or other appropriate units);

(vi) Percent calibration error (rounded to nearest tenth of a percent);

(vii) Number of out-of-control hours, if any, following test; and

(viii) Description of any adjustments, corrective actions, or maintenance following test.

(2) For each flow monitor, the owner or operator shall record the following for all daily interference checks, including any follow-up tests after corrective action:

(i) Code indicating whether monitor passes or fails the interference check;

(ii) Number of out-of-control hours, if any, following test; and

(iii) Description of any adjustments, corrective actions, or maintenance following test.

(3) For each SO_2 or NO_x pollutant concentration monitor, CO_2 monitor, or diluent gas monitor, the owner or operator shall record the following for the initial and all subsequent linearity check(s), including any follow-up tests after corrective action:

(i) Monitor-channel identification code;

(ii) Instrument span;

(iii) Date and hour;

(iv) Reference value (i.e., reference gas concentration, in ppm or other appropriate units);

(v) Observed value (average monitor response at each reference gas concentration, in ppm or other appropriate units);

(vi) Percent error at each of three reference gas concentrations (rounded to nearest tenth of a percent);

(vii) Number of out-of-control hours, if any, following test; and

(viii) Description of any adjustments, corrective action, or maintenance following test.

(4) For each flow monitor, where applicable, the owner or operator shall record the following for all quarterly leak checks, including any follow-up tests after corrective action:

(i) Code indicating whether monitor passes or fails the quarterly leak check;

(ii) Number of out-of-control hours, if any, following test; and

(iii) Description of any adjustments, corrective actions, or maintenance following test.

(5) For each SO_2 pollutant concentration monitor, flow monitor, CO_2 pollutant concentration monitor, NO_x continuous emission monitoring system, SO_2-diluent continuous emission monitoring system, and approved alternative monitoring system, the owner or operator shall record the following information for the initial and all subsequent relative accuracy tests and test audits:

(i) Date and hour;

(ii) Reference method(s) used;

(iii) Individual test run data from the relative accuracy test audit for the SO_2 concentration monitor, flow monitor, CO_2 pollutant concentration monitor, NO_x continuous emission monitoring system, SO_2-diluent continuous emission monitoring system, or approved alternative monitoring systems, including:

(A) Date, hour, and minute of beginning of test run,

(B) Date, hour, and minute of end of test run,

(C) Monitor-channel identification code,

(D) Run number,

(E) Run data for monitor;

(F) Run data for reference method; and

(G) Flag value (0 or 1) indicating whether run has been used in calculating relative accuracy and bias values.

(iv) Calculations and tabulated results, as follows:

(A) Arithmetic mean of the monitoring system measurement values, of the reference method values, and of their differences, as specified in Equation A–7 in appendix A to this part.

(B) Standard deviation, as specified in Equation A–8 in appendix A to this part.

(C) Confidence coefficient, as specified in Equation A–9 in appendix A to this part.

(D) Relative accuracy test results, as specified in Equation A–10 in appendix A to this part. (For the 3-level flow

monitor test only, relative accuracy test results should be recorded at each of three gas velocities. Each of these three gas velocities shall be expressed as a total integrated gross unit load, rounded to the nearest MWe.)

(E) Bias test results as specified in section 7.6.4 in appendix A to this part.

(F) Bias adjustment factor from Equations A–11 and A–12 in appendix A to this part for any monitoring system or component that failed the bias test and 1.0 for any monitoring system or component that passed the bias test. (For flow monitors only, bias adjustment factors should be recorded at each of three gas velocities).

(v) Number of out-of-control hours, if any, following test.

(vi) Description of any adjustment, corrective action, or maintenance following test.

(6) F-factor value(s) used to convert NO_x pollutant concentration and diluent gas (O_2 or CO_2) concentration measurements into NO_x emission rates (in lb/mmBtu), heat input or CO_2 emissions.

(7) Results of all trial runs and certification tests and quality assurance activities and measurements (including all reference method field test sheets, charts, records of combined system responses, laboratory analyses, and example calculations) necessary to substantiate compliance with all relevant appendices in this part.

(b) [Reserved]

[58 FR 3701, Jan. 11, 1993, as amended at 58 FR 40749, July 30, 1993]

§ 75.53 Monitoring plan.

(a) *General provisions.* The owner or operator of an affected unit shall prepare and maintain a monitoring plan. Except as provided in paragraph (d) of this section, a monitoring plan shall contain sufficient information on the continuous emission or opacity monitoring systems or excepted monitoring systems under appendix D or E of this part and the use of data derived from these systems to demonstrate that all unit SO_2 emissions, NO_X emissions, CO_2 emissions, and opacity are monitored and reported.

(b) Whenever the owner or operator makes a replacement, modification, or change, either in the certified continuous emission monitoring system or continuous opacity monitoring system or excepted monitoring systems under appendix D or E of this part, including a change in the automated data acquisition and handling system or in the flue gas handling system, that requires recertification, then the owner or operator shall update the monitoring plan.

(c) *Contents of the monitoring plan.* Each monitoring plan shall contain the following:

(1) Precertification information, including, as applicable, the identification of the test strategy, protocol for the relative accuracy test audit, other relevant test information, span calculations, and apportionment strategies under §§ 75.13 through 75.17 of this part.

(2) *Unit table.* A table identifying ORISPL numbers developed by the Department of Energy and used in the National Allowance Database, for all affected units involved in the monitoring plan, with the following information for each unit:

(i) Short name;

(ii) Classification of unit as one of the following: Phase I (including substitution or compensating units), Phase II, new, or nonaffected;

(iii) Type of boiler (or boilers for a group of units using a common stack);

(iv) Type of fuel(s) fired, by boiler, and if more than one fuel, the fuel classification of the boiler;

(v) Type(s) of emission controls for SO_2, NO_x, and particulates installed or to be installed, including specifications of whether such controls are pre-combustion, post-combustion, or integral to the combustion process; and

(vi) Identification of all units using a common stack.

(3) *Description of monitor site location.* Description of site locations for each monitoring component in the continuous emission or opacity monitoring systems, including schematic diagrams and engineering drawings specified in paragraphs (c)(7) and (c)(8) of this section, and any other documentation that demonstrates each monitor location meets the appropriate siting criteria.

(4) *Monitoring component table.* Identification and description of each monitoring component (including each

monitor and its identifiable components such as analyzer and/or probe) in the continuous emission monitoring systems (i.e., SO_2 pollutant concentration monitor, flow monitor, moisture monitor; NO_X pollutant concentration monitor and diluent gas monitor) the continuous opacity monitoring system, or excepted monitoring system (i.e., fuel flowmeter, data acquisition and handling system), including:

(i) Manufacturer model number and serial number;

(ii) Component/system identification code assigned by the utility to each identifiable monitoring component (such as the analyzer and/or probe). The code shall use a six-digit format, unique to each monitoring component, where the first three digits indicate the number of the component and the second three digits indicate the system to which the component belongs;

(iii) Actual or projected installation date (month and year);

(iv) A brief description of the component type or method of operation, such as in situ pollutant concentration monitor or thermal flow monitor;

(v) A brief description of the flow monitor that is sufficiently detailed to allow a determination of whether the applicable interference check design specification meets the requirements specified in appendix A of this part; and

(vi) A designation of the system as a primary, redundant backup, non-redundant backup or reference method backup system, as provided for in § 75.10(e).

(5) *Data acquisition and handling system table.* Identification and description of all major hardware and software components of the automated data acquisition and handling system, including:

(i) For hardware components, the manufacturer, model number, and actual or projected installation date;

(ii) For software components, identification of the provider and a brief description of features;

(iii) A data flow diagram denoting the complete information handling path from output signals of continuous emission monitoring system components to final reports;

(iv) A copy of the test results verifying the accuracy of the automated data acquisition and handling system (once such results are available).

(6) *Emissions formula table.* A table giving explicit formulas for each reported unit emission parameter, using component/system identification codes to link continuous emission monitoring system or excepted monitoring system observations with reported concentrations, mass emissions, or emission rates, according to the conversions listed in appendix D, E, or F to this part. The formulas must contain all constants and factors required to derive mass emissions or emission rates from component/system code observations, and each emissions formula is identified with a unique three digit code.

(7) *Schematic stack diagrams.* For units monitored by a continuous emission or opacity monitoring system, a schematic diagram identifying entire gas handling system from boiler to stack for all affected units, using identification numbers for units, monitor components, and stacks corresponding to the identification numbers provided in paragraphs (c)(2), (c)(4), (c)(5), and (c)(6) of this section. The schematic diagram must depict stack height and the height of any monitor locations. Comprehensive and/or separate schematic diagrams shall be used to describe groups of units using a common stack.

(8) *Stack and duct engineering diagrams.* For units monitored by a continuous emission or opacity monitoring system, stack and duct engineering diagrams showing the dimensions and location of fans, turning vanes, air preheaters, monitor components, probes, reference method sampling ports and other equipment which affects the monitoring system location, performance or quality control checks.

(9) Inside crosssectional area (ft^2) at flue exit and at flow monitoring location.

(10) *Span and calibration gas.* A table or description identifying maximum potential concentration, maximum expected concentration (if applicable), maximum potential flow rate, maximum potential NO_X emission rate, span value, and full-scale range for each SO_2, NO_X, CO_2, O_2, or flow component

monitor. In addition, the table must identify calibration gas levels for the calibration error test and the linearity check, and calculations made to determine each span value.

(d) *Contents of monitoring plan for specific situations.* The following additional information shall be included in the monitoring plan for gas-fired or oil-fired units or for units with add-on emission controls:

(1) For each gas-fired unit or oil-fired unit for which the owner or operator uses the optional protocol in appendix D of this part for estimating SO_2 mass emissions or appendix E of this part for estimating NO_X emission rate (using a fuel flow meter), the designated representative shall include in the monitoring plan:

(i) A description of the fuel flowmeter (and data demonstrating its flow meter accuracy, when available);

(ii) The installation location of each fuel flowmeter;

(iii) The fuel sampling location(s); and

(iv) Procedures used for calibrating each fuel flowmeter.

(2) For each gas-fired peaking unit and oil-fired peaking unit for which the owner or operator uses the optional procedures in appendix E of this part for estimating NO_X emission rate, the designated representative shall include in the monitoring plan:

(i) A protocol containing methods used to perform the baseline or periodic NO_X emission test, and a copy of initial performance test results (when such results are available);

(ii) Unit operating and capacity factor information demonstrating that the unit qualifies as a peaking unit, as defined in §72.2 of this chapter; and

(iii) Unit operating parameters related to NO_X formation by the unit.

(3) For each gas-fired unit and diesel-fired unit or unit with a wet flue gas pollution control system for which the designated representative claims an opacity monitoring exemption under §75.14, the designated representative shall include in the monitoring plan information demonstrating that the unit qualifies for the exemption.

(4) For each unit with add-on emission controls:

(i) A list of operating parameters for the add-on emission controls, including parameters from the list in §75.55 appropriate to the particular installation; and

(ii) The range of each operating parameter in the list that indicates the add-on emission controls are properly operating.

[58 FR 3701, Jan. 11, 1993, as amended at 60 FR 26532, 26568, May 17, 1995]

§75.54 General recordkeeping provisions.

(a) *Recordkeeping requirements for affected sources.* On or after January 1, 1996, the owner or operator shall meet the requirements of this section. The owner or operator of any affected source subject to the requirements of this part shall maintain for each affected unit a file of all measurements, data, reports, and other information required by this part at the source in a form suitable for inspection for at least three (3) years from the date of each record. Unless otherwise provided, throughout this subpart the phrase ''for each affected unit'' also applies to each group of affected or nonaffected units utilizing a common stack and common monitoring systems, pursuant to §§75.13 through 75.18, or utilizing a common pipe header and common fuel flowmeter, pursuant to section 2.1.2 of appendix D of this part. The file shall contain the following information:

(1) The data and information required in paragraphs (b) through (f) of this section, beginning with the earlier of the date of provisional certification, or the deadline in §75.4(a), (b) or (c);

(2) The supporting data and information used to calculate values required in paragraphs (b) through (f) of this section, excluding the subhourly data points used to compute hourly averages under §75.10(d), beginning with the earlier of the date of provisional certification, or the deadline in §75.4(a), (b) or (c);

(3) The data and information required in §75.55 of this part for specific situations, as applicable, beginning with the earlier of the date of provisional certification, or the deadline in §75.4(a), (b) or (c);

(4) The certification test data and information required in §75.56 for tests

required under § 75.20, beginning with the date of the first certification test performed, and the quality assurance and quality control data and information required in § 75.56 for tests and the quality assurance/quality control plan required under § 75.21 and appendix B of this part, beginning with the date of provisional certification;

(5) The current monitoring plan as specified in § 75.53, beginning with the initial submission required by § 75.62; and

(6) The quality control plan as described in appendix B to this part, beginning with the date of provisional certification.

(b) *Operating parameter record provisions.* The owner or operator shall record for each hour the following information on unit operating time, heat input, and load separately for each affected unit, and also for each group of units utilizing a common stack and a common monitoring system or utilizing a common pipe header and common fuel flowmeter, except that separate heat input data for each unit shall not be required after January 1, 2000 for any unit, other than an opt-in source, that does not have a NO_X emission limitation under part 76 of this chapter.

(1) Date and hour;

(2) Unit operating time (rounded up to nearest 15 minutes);

(3) Total hourly gross unit load (rounded to nearest MWge) (or steam load in lb/hr at stated temperature and pressure, rounded to the nearest 1000 lb/hr, if elected in the monitoring plan);

(4) Operating load range corresponding to total gross load of 1–10, except for units using a common stack or common pipe header, which may use the number of unit load ranges up to 20 for flow, as specified in the monitoring plan; and

(5) Total heat input (mmBtu, rounded to the nearest tenth).

(c) *SO_2 emission record provisions.* The owner or operator shall record for each hour the information required by this paragraph for each affected unit or group of units using a common stack and common monitoring systems, except as provided under § 75.11(e) or for a gas-fired or oil-fired unit for which the owner or operator is using the optional protocol in appendix D to this part for estimating SO_2 mass emissions:

(1) For SO_2 concentration, as measured and reported from each certified primary monitor, certified back-up monitor, or other approved method of emissions determination:

(i) Component-system identification code as provided for in § 75.53;

(ii) Date and hour;

(iii) Hourly average SO_2 concentration (ppm, rounded to the nearest tenth);

(iv) Hourly average SO_2 concentration (ppm, rounded to the nearest tenth) adjusted for bias, if bias adjustment factor is required as provided for in § 75.24(d);

(v) Percent monitor data availability (recorded to the nearest tenth of a percent) calculated pursuant to § 75.32; and

(vi) Method of determination for hourly average SO_2 concentration using Codes 1–15 in Table 4 of this section.

(2) For flow as measured and reported from each certified primary monitor, certified back-up monitor or other approved method of emissions determination:

(i) Component/system identification code as provided for in § 75.53;

(ii) Date and hour;

(iii) Hourly average volumetric flow rate (in scfh, rounded to the nearest thousand);

(iv) Hourly average volumetric flow rate (in scfh, rounded to the nearest thousand) adjusted for bias, if bias adjustment factor required as provided for in § 75.24(d);

(v) Hourly average moisture content of flue gases (percent, rounded to the nearest tenth) where SO_2 concentration is measured on dry basis;

(vi) Percent monitor data availability (recorded to the nearest tenth of a percent), calculated pursuant to § 75.32; and

(vii) Method of determination for hourly average flow rate using Codes 1–15 in Table 4.

(3) For SO_2 mass emissions as measured and reported from the certified primary monitoring system(s), certified redundant or non-redundant back-up monitoring system(s), or other approved method(s) of emissions determination:

(i) Date and hour;

(ii) Hourly SO_2 mass emissions (lb/hr, rounded to the nearest tenth);

(iii) Hourly SO_2 mass emissions (lb/hr, rounded to the nearest tenth) adjusted for bias, if bias adjustment factor required, as provided for in § 75.24(d); and

(iv) Identification code for emissions formula used to derive hourly SO_2 mass emissions from SO_2 concentration and flow data in paragraphs (c)(1) and (c)(2) of this section as provided for in § 75.53.

TABLE 4.—CODES FOR METHOD OF EMISSIONS AND FLOW DETERMINATION

Code	Hourly emissions/flow measurement or estimation method
1	Certified primary emission/flow monitoring system.
2	Certified back-up emission/flow monitoring system.
3	Approved alternative monitoring system.
4	Reference method: SO_2: Method 6C. Flow: Method 2. NO_X: Method 7E. CO_2 or O_2: Method 3A.
5	For units with add-on SO_2 and/or NO_X emission controls: SO_2 concentration or NO_X emission rate estimate from Agency preapproved parametric monitoring method.
6	Average of the hourly SO_2 concentrations, CO_2 concentrations, flow, or NO_X emission rate for the hour before and the hour following a missing data period.
7	Hourly average SO_2 concentration, CO_2 concentration, flow rate, or NO_X emission rate using initial missing data procedures.
8	90th percentile hourly SO_2 concentration, flow rate, or NO_X emission rate.
9	95th percentile hourly SO_2 concentration, flow rate, or NO_X emission rate.
10	Maximum hourly SO_2 concentration, flow rate, or NO_X emission rate.
11	Hourly average flow rate or NO_X emission rate in corresponding load range.
12	Maximum potential concentration of SO_2, maximum potential flow rate, or maximum potential NO_X emission rate, as determined using section 2.1 of appendix A of this part, or maximum CO_2 concentration.
13	Other data (specify method).
14	Minimum CO_2 concentration of 5.0 percent CO_2 or maximum O_2 concentration of 14.0 percent to be substituted optionally for measured diluent gas concentrations during unit startup, for NO_X emission rate or SO_2 emission rate in lb/mmBtu or for CO_2 concentration.
15	Fuel analysis data from appendix G of this part for CO_2 mass emissions.

(d) *NO_X emission record provisions.* The owner or operator shall record the information required by this paragraph for each affected unit for each hour, except for a gas-fired peaking unit or oil-fired peaking unit for which the owner or operator is using the optional protocol in appendix E to this part for estimating NO_X emission rate. For each NO_X emission rate as measured and reported from the certified primary monitor, certified back-up monitor, or other approved method of emissions determination:

(1) Component/system identification code as provided for in § 75.53;

(2) Date and hour;

(3) Hourly average NO_X concentration (ppm, rounded to the nearest tenth);

(4) Hourly average diluent gas concentration (percent O_2 or percent CO_2, rounded to the nearest tenth);

(5) Hourly average NO_X emission rate (lb/mmBtu, rounded to nearest hundredth);

(6) Hourly average NO_X emission rate (lb/mmBtu, rounded to nearest hundredth) adjusted for bias, if bias adjustment factor is required as provided for in § 75.24(d);

(7) Percent monitoring system data availability, (recorded to the nearest tenth of a percent), calculated pursuant to § 75.32;

(8) Method of determination for hourly average NO_X emission rate using Codes 1–15 in Table 4; and

(9) Identification code for emissions formula used to derive hourly average NO_X emission rate, as provided for in § 75.53.

(e) *CO_2 emission record provisions.* The owner or operator shall record or calculate CO_2 emissions for each affected unit using one of the following methods specified in this section:

(1) If the owner or operator chooses to use a CO_2 continuous emission monitoring system (including an O_2 monitor and flow monitor as specified in appendix F of this part), then the owner or operator shall record for each hour the following information for CO_2 mass emissions, as measured and reported from the certified primary monitor, certified back-up monitor, or other approved method of emissions determination:

(i) Component/system identification code as provided for in § 75.53;

(ii) Date and hour;

(iii) Hourly average CO_2 concentration (in percent, rounded to the nearest tenth);

(iv) Hourly average volumetric flow rate (scfh, rounded to the nearest thousand scfh);

(v) Hourly CO_2 mass emissions (tons/hr, rounded to the nearest tenth);

(vi) Percent monitor data availability (recorded to the nearest tenth of a percent); calculated pursuant to § 75.32;

(vii) Method of determination for hourly CO_2 mass emissions using Codes 1–15 in Table 4; and

(viii) Identification code for emissions formula used to derive average hourly CO_2 mass emissions, as provided for in § 75.53.

(2) As an alternative to § 75.54(e)(1), the owner or operator may use the procedures in § 75.13 and in appendix G to this part, and shall record daily the following information for CO_2 mass emissions:

(i) Date;

(ii) Daily combustion-formed CO_2 mass emissions (tons/day, rounded to the nearest tenth);

(iii) For coal-fired units, flag indicating whether optional procedure to adjust combustion-formed CO_2 mass emissions for carbon retained in flyash has been used and, if so, the adjustment;

(iv) For a unit with a wet flue gas desulfurization system or other controls generating CO_2, daily sorbent-related CO_2 mass emissions (tons/day, rounded to the nearest tenth); and

(v) For a unit with a wet flue gas desulfurization system or other controls generating CO_2, total daily CO_2 mass emissions (tons/day, rounded to the nearest tenth) as sum of combustion-formed emissions and sorbent-related emissions.

(f) *Opacity records.* The owner or operator shall record opacity data as specified by the State or local air pollution control agency. If the State or local air pollution control agency does not specify recordkeeping requirements for opacity, then record the information required by paragraphs (f) (1) through (5) of this section for each affected unit, except as provided for in § 75.14 (b), (c), and (d). The owner or operator shall also keep records of all incidents of opacity monitor downtime during unit operation, including reason(s) for the monitor outage(s) and any corrective action(s) taken for opacity, as measured and reported by the continuous opacity monitoring system:

(1) Component/system identification code;

(2) Date, hour, and minute;

(3) Average opacity of emissions for each six minute averaging period (in percent opacity);

(4) If the average opacity of emissions exceeds the applicable standard, then a code indicating such an exceedance has occurred; and

(5) Percent monitor data availability, recorded to the nearest tenth of a percent, calculated according to the requirements of the procedure recommended for State Implementation Plans in appendix M of part 51 of this chapter.

[60 FR 26533, May 17, 1995]

§ 75.55 General recordkeeping provisions for specific situations.

(a) *Specific SO_2 emission record provisions for units with qualifying Phase I technology.* In addition to the SO_2 emissions information required in § 75.54(c), from January 1, 1997, through December 31, 1999, the owner or operator shall record the applicable information in this paragraph for each affected unit on which SO_2 emission controls have been installed and operated for the purpose of meeting qualifying Phase I technology requirements pursuant to § 72.42 of this chapter and § 75.15.

(1) For units with post-combustion emission controls:

(i) Component/system identification codes for each inlet and outlet SO_2-diluent continuous emission monitoring system;

(ii) Date and hour;

(iii) Hourly average inlet SO_2 emission rate (lb/mmBtu, rounded to nearest hundredth);

(iv) Hourly average outlet SO_2 emission rate (lb/mmBtu, rounded to nearest hundredth);

(v) Percent data availability for both inlet and outlet SO_2-diluent continuous emission monitoring systems (recorded to the nearest tenth of a percent), calculated pursuant to Equation 8 of § 75.32 (for the first 8,760 unit operating hours following initial certification) and Equation 9 of § 75.32, thereafter; and

(vi) Identification code for emissions formula used to derive hourly average inlet and outlet SO_2 mass emissions rates for each affected unit or group of units using a common stack.

(2) For units with combustion and/or pre-combustion emission controls:

(i) Component/system identification codes for each outlet SO_2-diluent continuous emission monitoring system;

(ii) Date and hour;

(iii) Hourly average outlet SO_2 emission rate (lb/mmBtu, rounded to nearest hundredth);

(iv) For units with combustion controls, average daily inlet SO_2 emission rate (lb/mmBtu, rounded to nearest hundredth), determined by coal sampling and analysis procedures in § 75.15; and

(v) For units with pre-combustion controls (i.e., fuel pretreatment), fuel analysis demonstrating the weight, sulfur content, and gross calorific value of the product and raw fuel lots.

(b) *Specific parametric data record provisions for calculating substitute emissions data for units with add-on emission controls.* In accordance with § 75.34, the owner or operator of an affected unit with add-on emission controls shall either record the applicable information in paragraph (b)(3) of this section for each hour of missing SO_2 concentration data or NO_X emission rate (in addition to other information), or shall record the information in paragraph (b)(1) of this section for SO_2 or paragraph (b)(2) of this section for NO_X through an automated data acquisition and handling system, as appropriate to the type of add-on emission controls:

(1) For units with add-on SO_2 emission controls petitioning to use or using the optional parametric monitoring procedures in appendix C of this part, for each hour of missing SO_2 concentration or volumetric flow data:

(i) The information required in § 75.54(b) for SO_2 concentration and volumetric flow if either one of these monitors is still operating;

(ii) Date and hour;

(iii) Number of operating scrubber modules;

(iv) Total feedrate of slurry to each operating scrubber module (gal/min);

(v) Pressure differential across each operating scrubber module (inches of water column);

(vi) For a unit with a wet flue gas desulfurization system, an inline measure of absorber pH for each operating scrubber module;

(vii) For a unit with a dry flue gas desulfurization system, the inlet and outlet temperatures across each operating scrubber module;

(viii) For a unit with a wet flue gas desulfurization system, the percent solids in slurry for each scrubber module.

(ix) For a unit with a dry flue gas desulfurization system, the slurry feed rate (gal/min) to the atomizer nozzle;

(x) For a unit with SO_2 add-on emission controls other than wet or dry limestone, corresponding parameters approved by the Administrator;

(xi) Method of determination of SO_2 concentration and volumetric flow, using Codes 1–15 in Table 3 of § 75.54; and

(xii) Inlet and outlet SO_2 concentration values recorded by an SO_2 continuous emission monitoring system and the removal efficiency of the add-on emission controls.

(2) For units with add-on NO_X emission controls petitioning to use or using the optional parametric monitoring procedures in appendix C of this part, for each hour of missing NO_X emission rate data:

(i) Date and hour;

(ii) Inlet air flow rate (acfh, rounded to the nearest thousand);

(iii) Excess O_2 concentration of flue gas at stack outlet (percent, rounded to nearest tenth of a percent);

(iv) Carbon monoxide concentration of flue gas at stack outlet (ppm, rounded to the nearest tenth);

(v) Temperature of flue gas at furnace exit or economizer outlet duct (°F); and

(vi) Other parameters specific to NO_X emission controls (e.g., average hourly reagent feedrate);

(vii) Method of determination of NO_X emission rate using Codes 1–15 in Table 3 of § 75.54; and

(viii) Inlet and outlet NO_X emission rate values recorded by a NO_X continuous emission monitoring system and the removal efficiency of the add-on emission controls.

(3) For units with add-on SO_2 or NO_X emission controls following the provisions of § 75.34(a) (1) or (2), for each hour of missing data record:

(i) Parametric data which demonstrate the proper operation of the add-on emission controls, as described in the monitoring plan for the unit (to be maintained on site, and to be submitted upon request from the Administrator or by an EPA Regional office);

(ii) A flag indicating that the add-on emission controls are operating with all parameters within the ranges specified in the monitoring plan or that the add-on emission controls are not operating properly;

(iii) For units petitioning under § 75.66 for substituting a representative SO_2 concentration during missing data periods, any available inlet and outlet SO_2 concentration values recorded by an SO_2 continuous emission monitoring system; and

(iv) For units petitioning under § 75.66 for substituting a representative NO_X emission rate during missing data periods, any available inlet and outlet NO_X emission rate values recorded by a NO_X continuous emission monitoring system.

(c) *Specific SO_2 emission record provisions for gas-fired or oil-fired units using optional protocol in appendix D of this part.* In lieu of recording the information in § 75.54(c) of this section, the owner or operator shall record the applicable information in this paragraph for each affected gas-fired or oil-fired unit for which the owner or operator is using the optional protocol in appendix D of this part for estimating SO_2 mass emissions.

(1) For each hour when the unit is combusting oil:

(i) Date and hour;

(ii) Hourly average flow rate of oil with the units in which oil flow is recorded, (gal/hr, lb/hr, m^3/hr, or bbl/hr, rounded to the nearest tenth)(flag value if derived from missing data procedures);

(iii) Sulfur content of oil sample used to determine SO_2 mass emissions, rounded to nearest hundredth for diesel fuel or to the nearest tenth of a percent for other fuel oil (flag value if derived from missing data procedures);

(iv) Method of oil sampling (flow proportional, continuous drip, as delivered or manual);

(v) Mass of oil combusted each hour (lb/hr, rounded to the nearest tenth);

(vi) SO_2 mass emissions from oil (lb/hr, rounded to the nearest tenth);

(vii) For units using volumetric oil flowmeters, density of oil (flag value if derived from missing data procedures);

(viii) Gross calorific value (heat content) of oil, used to determine heat input (Btu/mass unit) (flag value if derived from missing data procedures);

(ix) Hourly heat input rate from oil according to procedures in appendix F of this part (mmBtu/hr, to the nearest tenth); and

(x) Fuel usage time for combustion of oil during the hour, rounded up to the nearest 15 min.

(2) For gas-fired units or oil-fired units using the optional protocol in appendix D of this part of daily manual oil sampling, when the unit is combusting oil, the highest sulfur content recorded from the most recent 30 daily oil samples rounded to nearest tenth of a percent.

(3) For each hour when the unit is combusting gaseous fuel,

(i) Date and hour;

(ii) Hourly heat input rate from gaseous fuel according to procedures in appendix F to this part (mmBtu/hr, rounded to the nearest tenth);

(iii) Sulfur content or SO_2 emission rate, in one of the following formats, in accordance with the appropriate procedure from appendix D of this part:

(A) Sulfur content of gas sample, (rounded to the nearest 0.1 grains/100 scf) (flag value if derived from missing data procedures); or

(B) SO_2 emission rate of 0.0006 lb/mmBtu for pipeline natural gas;

(iv) Hourly flow rate of gaseous fuel, in 100 scfh (flag value if derived from missing data procedures);

(v) Gross calorific value (heat content) of gaseous fuel, used to determine heat input (Btu/scf) (flag value if derived from missing data procedures);

(vi) Heat input rate from gaseous fuel (mmBtu/hr, rounded to the nearest tenth);

(vii) SO_2 mass emissions due to the combustion of gaseous fuels, lb/hr; and

(viii) Fuel usage time for combustion of gaseous fuel during the hour, rounded up to the nearest 15 min.

(4) For each oil sample or sample of diesel fuel:

(i) Date of sampling;

(ii) Sulfur content (percent, rounded to the nearest hundredth for diesel fuel and to the nearest tenth for other fuel oil) (flag value if derived from missing data procedures);

(iii) Gross calorific value or heat content (Btu/lb) (flag value if derived from missing data procedures); and

(iv) Density or specific gravity, if required to convert volume to mass (flag value if derived from missing data procedures).

(5) For each daily sample of gaseous fuel:

(i) Date of sampling;

(ii) Sulfur content (grains/100 scf, rounded to the nearest tenth) (flag value if derived from missing data procedures);

(6) For each monthly sample of gaseous fuel:

(i) Date of sampling;

(ii) Gross calorific value or heat content (Btu/scf) (flag value if derived from missing data procedures).

(d) *Specific NO_X emission record provisions for gas-fired peaking units or oil-fired peaking units using optional protocol in appendix E of this part.* In lieu of recording the information in paragraph § 75.54(d), the owner or operator shall record the applicable information in this paragraph for each affected gas-fired peaking unit or oil-fired peaking unit for which the owner or operator is using the optional protocol in appendix E of this part for estimating NO_X emission rate.

(1) For each hour when the unit is combusting oil,

(i) Date and hour;

(ii) Hourly average fuel flow rate of oil with the units in which oil flow is recorded (gal/hour, lb/hr or bbl/hour) (flag value if derived from missing data procedures);

(iii) Gross calorific value (heat content) of oil, used to determine heat input (Btu/lb) (flag value if derived from missing data procedures);

(iv) Hourly average NO_X emission rate from combustion of oil (lb/mmBtu);

(v) Heat input rate of oil (mmBtu/hr, rounded to the nearest tenth); and

(vi) Fuel usage time for combustion of oil during the hour, rounded to the nearest 15 min.

(2) For each hour when the unit is combusting gaseous fuel,

(i) Date and hour;

(ii) Hourly average fuel flow rate of gaseous fuel (100 scfh) (flag value if derived from missing data procedures);

(iii) Gross calorific value (heat content) of gaseous fuel, used to determine heat input (Btu/scf) (flag value if derived from missing data procedures);

(iv) Hourly average NO_X emission rate from combustion of gaseous fuel (lb/mmBtu, rounded to nearest hundredth);

(v) Heat input rate from gaseous fuel (mmBtu/hr, rounded to the nearest tenth); and

(vi) Fuel usage time for combustion of gaseous fuel during the hour, rounded to the nearest 15 min.

(3) For each hour when the unit combusts any fuel:

(i) Date and hour;

(ii) Total heat input from all fuels (mmBtu, rounded to the nearest tenth);

(iii) Hourly average NO_X emission rate for the unit for all fuels;

(iv) For stationary gas turbines and diesel or dual-fuel reciprocating engines, hourly averages of operating parameters under section 2.3 of appendix E (flag if value is outside of manufacturer's recommended range);

(v) For boilers, hourly average boiler O_2 reading (percent, rounded to the nearest tenth) (flag if value exceeds by more than 2 percentage points the O_2 level recorded at the same heat input during the previous NO_X emission rate test).

(4) For each fuel sample:

(i) Date of sampling;

(ii) Gross calorific value (heat content) (Btu/lb for oil, Btu/scf for gaseous fuel); and

(iii) Density or specific gravity, if required to convert volume to mass.

(e) *Specific SO_2* emission record provisions during the combustion of gaseous fuel. In accordance with the provisions in § 75.11(e), the owner or operator of a unit with an SO_2 continuous emission monitoring system may record the information in paragraph (c)(3) of this

section in lieu of the information in §§ 75.54(c)(1) and 75.54(c)(3), for those hours when only pipeline natural gas or a gaseous fuel with a sulfur content no greater than natural gas is combusted.

(f) The owner or operator shall meet the requirements of this section on or after January 1, 1996.

[60 FR 26535, 26568, May 17, 1995]

EFFECTIVE DATE NOTE: At 60 FR 26560, 26569, May 17, 1995, § 75.55 was amended by temporarily adding paragraph (e), effective July 17, 1995 through December 31, 1996.

§ 75.56 Certification, quality assurance and quality control record provisions.

(a) *Continuous emission or opacity monitoring systems.* The owner or operator shall record the applicable information in this section for each certified monitor or certified monitoring system (including certified backup monitors) measuring and recording emissions or flow from an affected unit.

(1) For each SO_2 or NO_X pollutant concentration monitor, flow monitor, CO_2 monitor, or diluent gas monitor, the owner or operator shall record the following for all daily and 7-day calibration error tests, including any follow-up tests after corrective action:

(i) Component/system identification code;

(ii) Instrument span;

(iii) Date and hour;

(iv) Reference value, (i.e., calibration gas concentration or reference signal value, in ppm or other appropriate units);

(v) Observed value (monitor response during calibration, in ppm or other appropriate units);

(vi) Percent calibration error (rounded to nearest tenth of a percent); and

(vii) For 7-day calibration tests for certification or recertification, a certification from the cylinder gas vendor or CEMS vendor, that calibration gas as defined in § 72.2 and appendix A of this part, were used to conduct calibration error testing; and

(viii) Description of any adjustments, corrective actions, or maintenance following test.

(2) For each flow monitor, the owner or operator shall record the following for all daily interference checks, including any follow-up tests after corrective action:

(i) Code indicating whether monitor passes or fails the interference check; and

(ii) Description of any adjustments, corrective actions, or maintenance following test.

(3) For each SO_2 or NO_X pollutant concentration monitor, CO_2 monitor, or diluent gas monitor, the owner or operator shall record the following for the initial and all subsequent linearity check(s), including any follow-up tests after corrective action:

(i) Component/system identification code;

(ii) Instrument span;

(iii) Date and hour;

(iv) Reference value (i.e., reference gas concentration, in ppm or other appropriate units);

(v) Observed value (average monitor response at each reference gas concentration, in ppm or other appropriate units);

(vi) Percent error at each of three reference gas concentrations (rounded to nearest tenth of a percent); and

(vii) Description of any adjustments, corrective action, or maintenance following test.

(4) For each flow monitor, where applicable, the owner or operator shall record the following for all quarterly leak checks, including any follow-up tests after corrective action:

(i) Code indicating whether monitor passes or fails the quarterly leak check; and

(ii) Description of any adjustments, corrective actions, or maintenance following test.

(5) For each SO_2 pollutant concentration monitor, flow monitor, CO_2 pollutant concentration monitor; NO_X continuous emission monitoring system, SO_2-diluent continuous emission monitoring system, and approved alternative monitoring system, the owner or operator shall record the following information for the initial and all subsequent relative accuracy tests and test audits:

(i) Date and hour;

(ii) Reference method(s) used;

(iii) Individual test run data from the relative accuracy test audit for the SO_2 concentration monitor, flow monitor,

CO_2 pollutant concentration monitor, NO_X continuous emission monitoring system, SO_2-diluent continuous emission monitoring system, or approved alternative monitoring systems, including:

(A) Date, hour, and minute of beginning of test run,

(B) Date, hour, and minute of end of test run,

(C) Component/system identification code,

(D) Run number,

(E) Run data for monitor;

(F) Run data for reference method; and

(G) Flag value (0 or 1) indicating whether run has been used in calculating relative accuracy and bias values.

(iv) Calculations and tabulated results, as follows:

(A) Arithmetic mean of the monitoring system measurement values, reference method values, and of their differences, as specified in Equation A–7 in appendix A to this part.

(B) Standard deviation, as specified in Equation A–8 in appendix A to this part.

(C) Confidence coefficient, as specified in Equation A–9 in appendix A to this part.

(D) Relative accuracy test results, as specified in Equation A–10 in appendix A to this part. (For the 3-level flow monitor test only, relative accuracy test results should be recorded at each of three gas velocities. Each of these three gas velocities shall be expressed as a total gross unit load, rounded to the nearest MWe or as steam load, rounded to the nearest thousand lb/hr.)

(E) Bias test results as specified in section 7.6.4 in appendix A to this part.

(F) Bias adjustment factor from Equations A–11 and A–12 in appendix A to this part for any monitoring system or component that failed the bias test and 1.0 for any monitoring system or component that passed the bias test. (For flow monitors only, bias adjustment factors should be recorded at each of three gas velocities).

(v) Description of any adjustment, corrective action, or maintenance following test.

(vi) F-factor value(s) used to convert NO_X pollutant concentration and diluent gas (O_2 or CO_2) concentration measurements into NO_X emission rates (in lb/mmBtu), heat input or CO_2 emissions.

(6) For each SO_2, NO_X, CO_2, or O_2 pollutant concentration monitor, NOx-diluent continuous emission monitoring system, or SO_2-diluent continuous emission monitoring system, the owner or operator shall record the following information for the cycle time test:

(i) Component/system identification code;

(ii) Date;

(iii) Start and end times;

(iv) Upscale and downscale cycle times for each component;

(v) Stable start monitor value;

(vi) Stable end monitor value;

(vii) Reference value of calibration gas(es);

(viii) Calibration gas level; and

(ix) Cycle time result for the entire system.

(7) Results of all trial runs and certification tests and quality assurance activities and measurements (including all reference method field test sheets, charts, records of combined system responses, laboratory analyses, and example calculations) necessary to substantiate compliance with all relevant appendices in this part. This information shall include, but shall not be limited to, the following reference method data:

(i) For each run of each test using Method 2 in appendix A of part 60 of this chapter to determine volumetric flow rate:

(A) Pitot tube coefficient;

(B) Date of pitot tube calibration;

(C) Average square root of velocity head of stack gas (inches of water) for the run;

(D) Average absolute stack gas temperature, °R;

(E) Barometric pressure at test port, inches of mercury;

(F) Stack static pressure, inches of H_2O;

(G) Absolute stack gas pressure, inches of mercury;

(H) Moisture content of stack gas, percent;

(I) Molecular weight of stack gas, wet basis (lb/lb-mole);

(J) Number of reference method measurements during the run; and

(K) Total volumetric flowrate (scfh, wet basis).

(ii) For each test using Method 2 in appendix A of part 60 of this chapter to determine volumetric flow rate:

(A) Information indicating whether or not the location meets requirements of Method 1 in appendix A of part 60 of this chapter;

(B) Information indicating whether or not the equipment passed the leak check after every run included in the relative accuracy test;

(C) Stack inside diameter at test port (ft);

(D) Duct side height and width at test port (ft);

(E) Stack or duct cross-sectional area at test port (ft^2); and

(F) Designation as to the load level of the test.

(iii) For each run of each test using Method 6C, 7E, or 3A in appendix A of part 60 of this chapter to determine SO_2, NO_X, CO_2, or O_2 concentration:

(A) Run start date;

(B) Run start time;

(C) Run end date;

(D) Run end time;

(E) Span of reference method analyzer;

(F) Reference gas concentration (low, mid-, and high gas levels);

(G) Initial and final analyzer calibration response (low, mid- and high gas levels);

(H) Analyzer calibration error (low, mid-, and high gas levels);

(I) Pre-test and post-test analyzer bias (zero and upscale gas levels);

(J) Calibration drift and zero drift of analyzer;

(K) Indication as to which data are from a pretest and which are from a posttest;

(L) Calibration gas level (zero, mid-level, or high); and

(M) Moisture content of stack gas, in percent, if needed to convert to moisture basis of CEMS being tested.

(iv) For each test using Method 6C, 7E, or 3A in appendix A of part 60 of this chapter to determine SO_2, NO_X CO_2, or O_2 concentration:

(A) Pollutant being measured;

(B) Test number;

(C) Date of interference test;

(D) Results of interference test;

(E) Date of NO_2 to NO conversion test (Method 7E only);

(F) Results of NO_2 to NO conversion test (Method 7E only).

(v) For each calibration gas cylinder used to test using Method 6C, 7E, or 3A in appendix A of part 60 of this chapter to determine SO_2, NO_X, CO_2, or O_2 concentration:

(A) Cylinder gas vendor name from certification;

(B) Cylinder number;

(C) Cylinder expiration date;

(D) Pollutant(s) in cylinder; and

(E) Cylinder gas concentration(s).

(b) *Excepted monitoring systems for gas-fired and oil-fired units.* The owner or operator shall record the applicable information in this section for each excepted monitoring system following the requirements of appendix D of this part or appendix E of this part for determining and recording emissions from an affected unit.

(1) For each oil-fired unit or gas-fired unit using the optional procedures of appendix D of this part for determining SO_2 mass emissions and heat input or the optional procedures of appendix E of this part for determining NO_X emission rate, for certification and quality assurance testing of fuel flowmeters:

(i) Date of test,

(ii) Upper range value of the fuel flowmeter,

(iii) Flowmeter measurements during accuracy test,

(iv) Reference flow rates during accuracy test,

(v) Average flowmeter accuracy as a percent of upper range value,

(vi) Fuel flow rate level (low, mid-level, or high); and

(vii) Description of fuel flowmeter calibration specification or procedure (in the certification application, or periodically if a different method is used for annual quality assurance testing).

(2) For gas-fired peaking units or oil-fired peaking units using the optional procedures of appendix E of this part, for each initial performance, periodic, or quality assurance/quality control-related test:

(i) For each run of emissions data;

(A) Run start date and time;

(B) Run end date and time;

(C) Fuel flow (lb/hr, gal/hr, scf/hr, bbl/hr, or m^3/hr);

(D) Gross calorific value (heat content) of fuel (Btu/lb or Btu/scf);

(E) Density of fuel (if needed to convert mass to volume);

(F) Total heat input during the run (mmBtu);

(G) Hourly heat input rate for run (mmBtu/hr);

(H) Response time of the O_2 and NO_X reference method analyzers;

(I) NO_X concentration (ppm);

(J) O_2 concentration (percent O_2);

(K) NO_X emission rate (lb/mmBtu); and

(L) Fuel or fuel combination (by heat input fraction) combusted.

(ii) For each unit load and heat input;

(A) Average NO_X emission rate (lb/mmBtu);

(B) F-factor used in calculations;

(C) Average heat input rate (mmBtu/hr);

(D) Unit operating parametric data related to NO_X formation for that unit type (e.g., excess O_2 level, water/fuel ratio); and

(E) Fuel or fuel combination (by heat input fraction) combusted.

(iii) For each test report;

(A) Graph of NO_X emission rate against heat input rate;

(B) Results of the tests for verification of the accuracy of emissions calculations and missing data procedures performed by the automated data acquisition and handling system, and the calculations used to produce NO_X emission rate data at different heat input conditions; and

(C) Results of all certification tests and quality assurance activities and measurements (including reference method field test sheets, charts, laboratory analyses, example calculations, or other data as appropriate), necessary to substantiate compliance with the requirements of appendix E of this part.

(c) The owner or operator shall meet the requirements of this section on or after January 1, 1996.

[60 FR 26536, 26568, May 17, 1995]

EFFECTIVE DATE NOTE: At 60 FR 26560, 26569, May 17, 1995, §75.56 was amended by temporarily adding paragraph (a)(6), effective July 17, 1995 through December 31, 1996.

Subpart G—Reporting Requirements

§75.60 General provisions.

(a) The designated representative for any affected unit subject to the requirements of this part shall comply with all reporting requirements in this section and with the signatory requirements of §72.21 of this chapter for all submissions.

(b) *Submissions.* The designated representative shall submit all reports and petitions (except as provided in §75.61) as follows:

(1) All initial certification or recertification testing notifications, initial certification or recertification applications, monitoring plans, petitions for alternative monitoring systems, notifications, electronic quarterly reports, and other communications required by this subpart shall be submitted to the Administrator.

(2) Copies of initial certification or recertification testing notifications, certification or recertification applications and monitoring plans shall be submitted to the appropriate Regional office of the U.S. Environmental Protection Agency and appropriate State or local air pollution control agency.

(c) *Confidentiality of data.* The following provisions shall govern the confidentiality of information submitted under this part.

(1) All emission data reported in quarterly reports under §75.64 shall remain public information.

(2) For information submitted under this part other than emission data submitted in quarterly reports, the designated representative must assert a claim of confidentiality at the time of submission for any information he or she wishes to have treated as confidential business information (CBI) under subpart B of part 2 of this chapter. Failure to assert a claim of confidentiality at the time of submission may result in disclosure of the information by EPA without further notice to the designated representative.

(3) Any claim of confidentiality for information submitted in quarterly reports under §75.64 must include substantiation of the claim. Failure to provide substantiation may result in

disclosure of the information by EPA without further notice.

(4) As provided under subpart B of part 2 of this chapter, EPA may review information submitted to determine whether it is entitled to confidential treatment even when confidentiality claims are initially received. The EPA will contact the designated representative as part of such a review process.

[58 FR 3701, Jan. 11, 1993, as amended at 60 FR 26538, May 17, 1995]

§ 75.61 Notifications.

(a) *Submission.* The designated representative for an affected unit (or owner or operator, as specified) shall submit notice to the Administrator, to the appropriate EPA Regional Office, and to the applicable State air pollution control agency for the following purposes, as required by this part.

(1) *Initial certification and recertification test notifications.* The owner or operator or designated representative for an affected unit shall submit written notification of initial certification tests, recertification tests, and revised test dates as specified in § 75.20 for continuous emission monitoring systems, for alternative monitoring systems under subpart E of this part, or for excepted monitoring systems under appendix E of this part, except as provided in paragraph (a)(4) of this section and except for testing only of the data acquisition and handling system.

(i) *Notification of initial certification testing.* Initial certification test notifications shall be submitted not later than 45 days prior to the first scheduled day of initial certification testing. Testing may be performed on a date other than that already provided in a notice under this subparagraph as long as notice of the new date is provided either in writing or by telephone or other means at least 7 days prior to the original scheduled test date or the revised test date, whichever is earlier.

(ii) *Notification of certification retesting and recertification testing.* For retesting following a loss of certification under § 75.20(a)(5) or for recertification under § 75.20(b), notice of testing shall be submitted either in writing or by telephone at least 7 days prior to the first scheduled day of testing; except that in emergency situations when testing is required following an uncontrollable failure of equipment that results in lost data, notice shall be sufficient if provided within 2 business days following the date when testing is scheduled. Testing may be performed on a date other than that already provided in a notice under this subparagraph as long as notice of the new date is provided by telephone or other means at least 2 business days prior to the original scheduled test date or the revised test date, whichever is earlier.

(iii) *Repeat of testing without notice.* Notwithstanding the above notice requirements, the owner or operator may elect to repeat a certification test immediately, without advance notification, whenever the owner or operator has determined during the certification testing that a test was failed or that a second test is necessary in order to attain a reduced relative accuracy test frequency.

(2) *New unit, newly affected unit, new stack, or new flue gas desulfurization system operation notification.* The designated representative for an affected unit shall submit written notification: For a new unit or a newly affected unit, of the planned date when a new unit or newly affected unit will commence commercial operation or, for new stack or flue gas desulfurization system, of the planned date when a new stack or flue gas desulfurization system will be completed and emissions will first exit to the atmosphere.

(i) Notification of the planned date shall be submitted not later than 45 days prior to the date the unit commences commercial operation, or not later than 45 days prior to the date when a new stack or flue gas desulfurization system exhausts emissions to the atmosphere.

(ii) If the date when the unit commences commercial operation or the date when the new stack or flue gas desulfurization system exhausts emissions to the atmosphere, whichever is applicable, changes from the planned date, a notification of the actual date shall be submitted not later than 7 days following: The date the unit commences commercial operation or, the date when a new stack or flue gas desulfurization system exhausts emissions to the atmosphere.

(3) *Unit shutdown and recommencement of commercial operation.* The designated representative for an affected unit that will be shutdown on the relevant compliance date in § 75.4(a) and that is relying on the provisions in § 75.4(d) to postpone certification testing shall submit notification of unit shutdown and recommencement of commercial operation as follows:

(i) For planned unit shutdowns, written notification of the planned shutdown date and planned date of recommencement of commercial operation shall be submitted 45 calendar days prior to the deadline in § 75.4(a). For unit shutdowns that are not planned 45 days prior to the deadline in § 75.4(a), written notification of the planned shutdown date and planned date of recommencement of commercial operation shall be submitted no later than 7 days after the date the owner or operator is able to schedule the shutdown date and date of recommencement of commercial operation. If the actual shutdown date or the actual date of recommencement of commercial operation differs from the planned date, written notice of the actual date shall be submitted no later than 7 days following the actual date of shutdown or of recommencement of commercial operation, as applicable;

(ii) For unplanned unit shutdowns, written notification of actual shutdown date and the expected date of recommencement of commercial operation shall be submitted no later than 7 days after the shutdown. If the actual date of recommencement of commercial operation differs from the expected date, written notice of the actual date shall be submitted no later than 7 days following the actual date of recommencement of commercial operation.

(4) *Use of backup fuels for appendix E procedures.* The designated representative for an affected oil-fired or gas-fired peaking unit that is using an excepted monitoring system under appendix E of this part and that is relying on the provisions in § 75.4(f) to postpone testing of a fuel shall submit written notification of that fact no later than 45 days prior to the deadline in § 75.4(a). The designated representative shall also submit a notification that such a fuel has been combusted no later than 7 days after the first date of combustion of any fuel for which testing has not been performed under appendix E after the deadline in § 75.4(a). Such notice shall also include notice that testing under Appendix E either was performed during the initial combustion or notice of the date that testing will be performed.

(5) [Reserved]

(6) *Notice of combustion of emergency fuel under appendix D or E.* The designated representative of an oil-fired unit or gas-fired unit using appendix D or E of this part shall provide notice of the combustion of emergency fuel according to the following:

(i) For an affected oil-fired or gas-fired unit that is using an excepted monitoring system under appendix D or E of this part, where the owner or operator is postponing installation or testing of a fuel flowmeter for emergency fuel under § 75.4(g), the designated representative shall submit written notification of postponement of installation or testing no later than 45 days prior to the deadline in § 75.4(a). The designated representative shall also submit a notification that emergency fuel has been combusted no later than 7 days after the first date of combustion of the emergency fuel after the deadline in § 75.4(a).

(ii) The designated representative of a unit that has received approval of a petition under § 75.66 for exemption from one or more of the requirements of appendix E of this part for certification of an excepted monitoring system under appendix E of this part for a unit combusting emergency fuel shall submit written notice of each period of combustion of the emergency fuel with the next quarterly report submitted under § 75.64 for each calendar quarter in which emergency fuel is combusted, including notice specifying the exact dates and hours during which the emergency fuel was combusted.

(b) The owner or operator or designated representative shall submit notification of certification tests and recertification tests for continuous opacity monitoring systems, as specified in § 75.20(c)(6) to the State or local air pollution control agency.

(c) If the Administrator determines that notification substantially similar to that required in this section is required by any other State or local agency, the owner or operator or designated representative may send the Administrator a copy of that notification to satisfy the requirements of this section, provided the ORISPL unit identification number(s) is denoted.

[60 FR 26538, May 17, 1995, as amended at 61 FR 25582, May 22, 1996]

§ 75.62 Monitoring plan.

(a) *Submission.* The designated representative for an affected unit shall submit the monitoring plan to the Administrator no later than 45 days prior to the first scheduled certification test, other than testing of a fuel flowmeter or an excepted monitoring system under appendix D of this part. The designated representative shall submit the monitoring plan for a Phase II unit using an excepted monitoring system under appendix D of this part to the Administrator no later than November 15, 1994.

(b) *Contents.* Monitoring plans shall contain the information specified in § 75.53 of this part.

(c) *Format.* Each monitoring plan shall be submitted in a format specified by the Administrator, including information in electronic format and on paper.

[58 FR 3701, Jan. 11, 1993, as amended at 60 FR 26539, May 17, 1995]

§ 75.63 Initial certification or recertification application.

(a) *Submission.* The designated representative for an affected unit or a combustion source seeking to enter the Opt-in Program in accordance with part 74 of this chapter shall submit the application to the Administrator within 45 days after completing all initial certification tests or recertification tests.

(b) *Contents.* Each application for initial certification or recertification shall contain the following information:

(1) A copy of the monitoring plan (or any modifications to the monitoring plan) for the unit, or units, or combustion sources seeking to enter the Opt-in Program in accordance with part 74 of this chapter, if not previously submitted.

(2) The results of the test(s) required by § 75.20, including the type of test conducted, testing date, and field data sheets required by § 75.52 (or § 75.56, no later than January 1, 1996), and including the results of any failed tests that had been repeated pursuant to the requirements in § 75.20.

(3) Results of the tests for verification of the accuracy of emissions and volumetric flow calculations performed by the automated data acquisition and handling system, including a summary of equations used to convert component data to units of the standard and to calculate substitute data for missing data periods, including sample calculations.

(c) *Format.* Each certification application shall be submitted in a format to be specified by the Administrator, including test results in electronic format and field data sheets required by § 75.52 (or § 75.56, no later than January 1, 1996) on paper where the information required under § 75.56(a)(7) shall be submitted on paper.

[60 FR 26539, May 17, 1995]

§ 75.64 Quarterly reports.

(a) *Electronic submission.* The designated representative for an affected unit shall electronically report the data and information in paragraphs (a), (b), and (c) of this section to the Administrator quarterly, beginning with the data from the later of: the last (partial) calendar quarter of 1993 (where the calendar quarter data begins at November 15, 1993); or the calendar quarter corresponding to the relevant deadline for certification in § 75.4(a), (b), or (c). For any provisionally-certified monitoring system, some or all of the quarterly data may be invalidated, if the Administrator subsequently issues a notice of disapproval within 120 days of receipt of the complete initial certification application or within 60 days of receipt of the complete recertification application for the monitoring system. Each electronic report must be submitted to the Administrator within 30 days following the end of each calendar quarter and shall

include for each affected unit (or group of units using a common stack):

(1) The information and hourly data required in §§75.50 through 75.52 (or §§75.54 through 75.56), no later than the quarterly report due April 30, 1996), excluding:

(i) Descriptions of adjustments, corrective action, and maintenance;

(ii) Information which is incompatible with electronic reporting (e.g., field data sheets, lab analyses, quality control plan);

(iii) Opacity data listed in §75.50(f) or §75.54(f);

(iv) For units with SO_2 or NO_X add-on emission controls that do not elect to use the approved site-specific parametric monitoring procedures for calculation of substitute data, the information in §75.55(b)(3); and

(v) The information recorded under §75.56(a)(7) for the period prior to January 1, 1996.

(2) Tons (rounded to the nearest tenth) of SO_2 emitted during the quarter and cumulative SO_2 emissions for calendar year.

(3) Average NO_x emission rate (lb/mmBtu, rounded to the nearest hundredth) during the quarter and cumulative NO_x emission rate for calendar year.

(4) Tons of CO_2 emitted during quarter and cumulative CO_2 emissions for calendar year.

(5) Total heat input (mmBtu) for quarter and cumulative heat input for calendar year.

(6) If the affected unit is using a qualifying Phase I technology, then the quarterly report shall include the information required in paragraph (e) of this section.

(b) The designated representative shall affirm that the component/system identification codes and formulas in the quarterly electronic reports, submitted to the Administrator pursuant to §75.53, represent current operating conditions.

(c) *Compliance certification*. The designated representative shall submit a certification in support of each quarterly emissions monitoring report based on reasonable inquiry of those persons with primary responsibility for ensuring that all of the unit's emissions are correctly and fully monitored. The certification shall indicate whether the monitoring data submitted were recorded in accordance with the applicable requirements of this part including the quality control and quality assurance procedures and specifications of this part and its appendices, and any such requirements, procedures and specifications of an applicable excepted or approved alternative monitoring method. In the event of any missing data periods, the certification must describe the measures taken to cure the causes for the missing data periods. For a unit with add-on emission controls, the designated representative shall also include a certification for all hours where data are substituted following the provisions of §75.34(a)(1), that the add-on emission controls were operating within the range of parameters listed in the monitoring plan, and that the substitute values recorded during the quarter do not systematically underestimate SO_2 or NO_X emissions, pursuant to §75.34.

(d) *Electronic format*. Each quarterly report shall be submitted in a format to be specified by the Administrator, including both electronic submission of data and paper submission of compliance certifications.

(e) *Phase I qualifying technology reports*. In addition to reporting the information in paragraphs (a), (b), and (c) of this section, the designated representative for an affected unit on which SO_2 emission controls have been installed and operated for the purpose of meeting qualifying Phase I technology requirements pursuant to §72.42 of this chapter shall also submit reports documenting the measured percent SO_2 emissions removal to the Administrator on a quarterly basis, beginning the first quarter of 1997 and continuing through the fourth quarter of 1999. Each report shall include all measurements and calculations necessary to substantiate that the qualifying technology achieves the overall percentage reduction in SO_2 emissions.

[58 FR 3701, Jan. 11, 1993, as amended at 60 FR 26540, 26569, May 17, 1995]

§75.65 Opacity reports.

The owner or operator or designated representative shall report excess emissions of opacity recorded under

§§ 75.50(f) or 75.54(f) to the applicable State or local air pollution control agency, in a format specified by the applicable State or local air pollution control agency.

[60 FR 26540, May 17, 1995]

§ 75.66 Petitions to the Administrator.

(a) *General.* The designated representative for an affected unit subject to the requirements of this part may submit petitions to the Administrator. Any petitions shall be submitted in accordance with the requirements of this section. The designated representative shall comply with the signatory requirements of § 72.21 of this chapter for each submission.

(b) *Alternative flow monitoring method petition.* In cases where no location exists for installation of a flow monitor in either the stack or the ducts serving an affected unit that satisfies the minimum physical siting criteria in appendix A of this part or where installation of a flow monitor in either the stack or duct is demonstrated to the satisfaction of the Administrator to be technically infeasible, the designated representative for the affected unit may petition the Administrator for an alternative method for monitoring volumetric flow. The petition shall, at a minimum, contain the following information:

(1) Identification of the affected unit(s);

(2) Description of why the minimum siting criteria cannot be met within the existing ductwork or stack(s). This description shall include diagrams of the existing ductwork or stack, as well as documentation of any attempts to locate a flow monitor; and

(3) Description of proposed alternative method for monitoring flow.

(c) *Alternative to standards incorporated by reference.* The designated representative for an affected unit may apply to the Administrator for an alternative to any standard incorporated by reference and prescribed in this part. The designated representative shall include the following information in an application:

(1) A description of why the prescribed standard is not being used;

(2) A description and diagram(s) of any equipment and procedures used in the proposed alternative;

(3) Information demonstrating that the proposed alternative produces data acceptable for use in the Acid Rain Program, including accuracy and precision statements, NIST traceability certificates or protocols, or other supporting data, as applicable to the proposed alternative.

(d) *Alternative monitoring system petitions.* The designated representative for an affected unit may submit a petition to the Administrator for approval and certification of an alternative monitoring system or component according to the procedure in subpart E of this part. Each petition shall contain the information and data specified in subpart E, including the information specified in § 75.48, in a format to be specified by the Administrator.

(e) *Parametric monitoring procedure petitions.* The designated representative for an affected unit may submit a petition to the Administrator, where each petition shall contain the information specified in § 75.51(b) (or § 75.55(b), no later than January 1, 1996) for use of a parametric monitoring method. The Administrator will either:

(1) Publish a notice in the FEDERAL REGISTER indicating receipt of a parametric monitoring procedure petition;, or

(2) Notify interested parties of receipt of a parametric monitoring petition.

(f) *Missing data petitions for units with add-on emission controls.* The designated representative for an affected unit may submit a petition to the Administrator for the use of the maximum controlled emission rate, which the Administrator will approve if the petition adequately demonstrates that all the requirements in § 75.34(a)(2) are satisfied. Each petition shall contain the information listed below for the time period (or data gap) during which the affected unit experienced the monitor outage that would otherwise result in the substitution of an uncontrolled maximum value under the standard missing data procedures contained in subpart D of this part:

(1) Data demonstrating that the affected unit's monitor data availability

for the time period under petition was less than 90.0 percent;

(2) Data demonstrating that the add-on emission controls were operating properly during the time period under petition (i.e., within the range of operating parameters for the add-on emission controls in the monitoring plan for the unit);

(3) A list of the average hourly values for the previous 720 quality-assured monitor operating hours, highlighting both the maximum recorded value and the value corresponding to the maximum controlled emission rate; and

(4) An explanation and information on operation of the add-on emission controls demonstrating that the selected historical SO_2 concentration or NO_X emission rate does not underestimate the SO_2 concentration or NO_X emission rate during the missing data period.

(g) *Petitions for emissions or heat input apportionments.* The designated representative of an affected unit shall provide information to describe a method for emissions or heat input apportionment under §§75.13, 75.16, 75.17, or appendix D of this part. This petition may be submitted as part of the monitoring plan. Such a petition shall contain, at a minimum, the following information:

(1) A description of the units, including their fuel type, their boiler type, and their categorization as Phase I units, substitution units, compensating units, Phase II units, new units, or non-affected units;

(2) A formula describing how the emissions or heat input are to be apportioned to which units;

(3) A description of the methods and parameters used to apportion the emissions or heat input; and

(4) Any other information necessary to demonstrate that the apportionment method accurately measures emissions or heat input and does not underestimate emissions or heat input from affected units.

(h) *Partial recertification petition.* The designated representative of an affected unit may provide information and petition the Administrator to specify which of the certification tests required by §75.20 apply for partial recertification of the affected unit. Such a petition shall include the following information:

(1) Identification of the monitoring system(s) being changed;

(2) A description of the changes being made to the system;

(3) An explanation of why the changes are being made; and

(4) A description of the possible effect upon the monitoring system's ability to measure, record, and report emissions.

(i) *Any other petitions to the Administrator under this part.* The designated representative for an affected unit shall include sufficient information for the evaluation of any other petition submitted to the Administrator under this part.

[58 FR 3701, Jan. 11, 1993,as amended at 60 FR 26540, 26569, May 17, 1995]

§75.67 Retired units petitions.

(a) For units that will be permanently retired prior to January 1, 1995, if the designated representative submits a complete petition, as required in §72.8 of this chapter, to the Administrator prior to the deadline in §75.4 by which the continuous emission or opacity monitoring systems must complete the required certification tests, the Administrator will issue an exemption from the requirements of this part, including the requirement to install and certify continuous emission monitoring systems.

(b) For combustion sources seeking to enter the Opt-in Program in accordance with part 74 of this chapter that will be permanently retired and governed upon entry into the Opt-in Program by a thermal energy plan in accordance with §74.47 of this chapter, an exemption from the requirements of this part, including the requirement to install and certify a continuous emissions monitoring system, may be obtained from the Administrator if the designated representative submits to the Administrator a petition for such an exemption prior to the deadline in §75.4 by which the continuous emission or opacity monitoring systems must complete the required certification tests.

[60 FR 17131, Apr. 4, 1995, as amended at 60 FR 26541, May 17, 1995]

APPENDIX A TO PART 75—SPECIFICATIONS AND TEST PROCEDURES

1. INSTALLATION AND MEASUREMENT LOCATION

1.1 Pollutant Concentration and CO_2 or O_2 Monitors

Following the procedures in section 3.1 of Performance Specification 2 in Appendix B to part 60 of this chapter, install the pollutant concentration monitor or monitoring system at a location where the pollutant concentration and emission rate measurements are directly representative of the total emissions from the affected unit. Select a representative measurement point or path for the monitor probe(s) (or for the path from the transmitter to the receiver) such that the SO_2 pollutant concentration monitor or NO_x continuous emission monitoring system (NO_x pollutant concentration monitor and diluent gas monitor) will pass the relative accuracy test (see section 6 of this Appendix).

It is recommended that monitor measurements be made at locations where the exhaust gas temperature is above the dewpoint temperature. If the cause of failure to meet the relative accuracy tests is determined to be the measurement location, relocate the monitor probe(s).

1.1.1 Point Pollutant Concentration and CO_2 or O_2 Monitors

Locate the measurement point (1) within the centroidal area of the stack or duct cross section, or (2) no less than 1.0 meter from the stack or duct wall.

1.1.2 Path Pollutant Concentration and CO_2 or O_2 Gas Monitors

Locate the measurement path (1) totally within the inner area bounded by a line 1.0 meter from the stack or duct wall, or (2) such that at least 70.0 percent of the path is within the inner 50.0 percent of the stack or duct cross-sectional area, or (3) such that the path is centrally located within any part of the centroidal area.

1.2 Flow Monitors

Install the flow monitor in a location that provides representative volumetric flow over all operating conditions. Such a location is one that provides an average velocity of the flue gas flow over the stack or duct cross section, provides a representative SO_2 emission rate (in lb/hr), and is representative of the pollutant concentration monitor location. Where the moisture content of the flue gas affects volumetric flow measurements, use the procedures in both Reference Methods 1 and 4 of Appendix A to part 60 of this chapter to establish a proper location for the flow monitor. The EPA recommends (but does not require) performing a flow profile study following the procedures in 40 CFR part 60, appendix A, Method, 1, section 2.5 or 2.4 for each of the three operating or load levels indicated in section 6.5.2 of this appendix to determine the acceptability of the potential flow monitor location and to determine the number and location of flow sampling points required to obtain a representative flow value. The procedure in 40 CFR part 60, Appendix A, Test Method 1, section 2.5 may be used even if the flow measurement location is greater than or equal to 2 equivalent stack or duct diameters downstream or greater than or equal to ½ duct diameter upstream from a flow disturbance. If a flow profile study shows that cyclonic (or swirling) or stratified flow conditions exist at the potential flow monitor location that are likely to prevent the monitor from meeting the performance specifications of this part, then EPA recommends either (1) selecting another location where there is no cyclonic (or swirling) or stratified flow condition, or (2) eliminating the cyclonic (or swirling) or stratified flow condition by straightening the flow, e.g., by installing straightening vanes. EPA also recommends selecting flow monitor locations to minimize the effects of condensation, coating, erosion, or other conditions that could adversely affect flow monitor performance.

1.2.1 Acceptability of Monitor Location

The installation of a flow monitor is acceptable if either (1) the location satisfies the minimum siting criteria of Method 1 in Appendix A to part 60 of this chapter (i.e., the location is greater than or equal to eight stack or duct diameters downstream and two diameters upstream from a flow disturbance; or, if necessary, two stack or duct diameters downstream and one-half stack or duct diameter upstream from a flow disturbance), or (2) the results of a flow profile study, if performed, are acceptable (i.e., there are no cyclonic (or swirling) or stratified flow conditions), and the flow monitor also satisfies the performance specifications of this part. If the flow monitor is installed in a location that does not satisfy these physical criteria, but nevertheless the monitor achieves the performance specifications of this part, then the location is acceptable, notwithstanding the requirements of this section.

1.2.2 Alternative Monitoring Location

Whenever the designated representative successfully demonstrates that modifications to the exhaust duct or stack (such as installation of straightening vanes, modifications of ductwork, and the like) are necessary for the flow monitor to meet the performance specifications, the Administrator may approve an interim alternative flow monitoring methodology and an extension to

the required certification date for the flow monitor.

Whenever the owner or operator successfully demonstrates that modifications to the exhaust duct or stack (such as installation of straightening vanes, modifications of ductwork, and the like) are necessary for the flow monitor to meet the performance specifications, the Administrator may approve an interim alternative flow monitoring methodology and an extension to the required certification date for the flow monitor.

Where no location exists that satisfies the physical siting criteria in section 1.2.1, where the results of flow profile studies performed at two or more alternative flow monitor locations are unacceptable, or where installation of a flow monitor in either the stack or the ducts is demonstrated to be technically infeasible, the owner or operator may petition the Administrator for an alternative method for monitoring flow.

2. EQUIPMENT SPECIFICATIONS

2.1 Instrument Span

In implementing sections 2.1.1 through 2.1.4 of this appendix, to the extent practicable, measure at a range such that the majority of readings obtained during normal operation are between 25 and 75 percent of full-scale range of the instrument.

2.1.1 SO_2 Pollutant Concentration Monitors

Determine, as indicated below, the span value for an SO_2 pollutant concentration monitor so that all expected concentrations can be accurately measured and recorded.

2.1.1.1 Maximum Potential Concentration

The monitor must be capable of accurately measuring up to 125 percent of the maximum potential concentration (MPC) as calculated using Equation A–1a or A–1b. Calculate the maximum potential concentration by using Equation A–1a or A–1b and the maximum percent sulfur and minimum gross calorific value (GCV) for the highest sulfur fuel to be burned, using daily fuel sample data if they are available. If an SO_2 CEMS is already installed, the owner or operator may determine an MPC based upon the maximum concentration observed during the previous 30 unit operating days when using the type of fuel to be burned. For initial certification, base the maximum percent sulfur and minimum GCV on the results of all available fuel sampling and analysis data from the previous 12 months (where such data exists). If the unit has not been operated during that period, use the maximum sulfur content and minimum GCV from the fuel contract for fuel that will be combusted by the unit. Whenever the fuel supply changes such that these maximum sulfur and minimum GCV values may change significantly, base the maximum percent sulfur and minimum GCV on the new fuel with the highest sulfur content. Use the one of the two following methods that results in a higher MPC: (1) results of samples representative of the new fuel supply, or (2) maximum sulfur and minimum GCV from the fuel contract for fuel that will be combusted by the unit. Whenever performing fuel sampling to determine the MPC, use ASTM Methods ASTM D3177–89, ''Standard Test Methods for Total Sulfur in the Analysis Sample of Coal and Coke,'' ASTM D4239–85, ''Standard Test Methods for Sulfur in the Analysis Sample of Coal and Coke Using High Temperature Tube Furnace Combustion Methods,'' ASTM D4294–90, ''Standard Test Method for Sulfur in Petroleum Products by Energy-Dispersive X-Ray Fluorescence Spectroscopy,'' ASTM D1552–90, ''Standard Test Method for Sulfur in Petroleum Products (High Temperature Method),'' ASTM D129–91, ''Standard Test Method for Sulfur in Petroleum Products (General Bomb Method),'' or ASTM D2622–92, ''Standard Test Method for Sulfur in Petroleum Products by X-Ray Spectrometry'' for sulfur content of solid or liquid fuels, or ASTM D3176–89, ''Standard Practice for Ultimate Analysis of Coal and Coke'', ASTM D240–87 (Reapproved 1991), ''Standard Test Method for Heat of Combustion of Liquid Hydrocarbon Fuels by Bomb Calorimeter'', or ASTM D2015–91, ''Standard Test Method for Gross Calorific Value of Coal and Coke by the Adiabatic Bomb Calorimeter'' for GCV (incorporated by reference under §75.6). Multiply the maximum potential concentration by 125 percent, and round up the resultant concentration to the nearest multiple of 100 ppm to determine the span value. The span value will be used to determine the concentrations of the calibration gases. Include the full-scale range setting and calculations of the span and MPC in the monitoring plan for the unit. Select the full-scale range of the instrument to be consistent with section 2.1 of this appendix, and to be greater than or equal to the span value. This selected monitor range with a span rounded up from 125 percent of the maximum potential concentration will be the ''high-scale'' of the SO_2 pollutant concentration monitor.

$$MPC = 11.32 \times 10^6 \left(\frac{\%S}{GCV} \right) \left(\frac{20.9 - \%O_{2w}}{20.9} \right) \qquad \text{(Eq. A–1a)}$$

or

$$MPC = 66.93 \times 10^6 \left(\frac{\%S}{GCV} \right) \left(\frac{\%CO_{2w}}{100} \right) \qquad \text{(Eq. A–1b)}$$

Where,

MPC=Maximum potential concentration (ppm, wet basis). (To convert to dry basis, divide the MPC by 0.9.)

%S=Maximum sulfur content of fuel to be fired, wet basis, weight percent, as determined by ASTM D3177–89, ASTM D4239–85, ASTM D4294–90, ASTM D1552–90, ASTM D129–91, or ASTM D2622–92 for solid or liquid fuels (incorporated by reference under §75.6).

GCV=Minimum gross calorific value of the fuel lot consistent with the sulfur analysis (Btu/lb), as determined using ASTM D3176–89, ASTM D240–87 (Reapproved 1991), or ASTM D2015–91 (incorporated by reference under §75.6).

$\%O_{2w}$=Minimum oxygen concentration, percent wet basis, under normal operating conditions.

$\%CO_{2w}$=Maximum carbon dioxide concentration, percent wet basis, under normal operating conditions.

11.32×10^6=Oxygen-based conversion factor in (Btu/lb)(ppm)/%.

6.93×10^6=Carbon dioxide-based conversion factor in (Btu/lb)(ppm)/%

NOTE: All percent values to be inserted in the equations of this section are to be expressed as a percentage, not a fractional value, e.g., 3, not .03.

2.1.1.2 Maximum Expected Concentration

If the majority of SO_2 concentration values are predicted to be less than 25 percent of the full-scale range of the instrument selected under section 2.1.1.1 of this appendix, (e.g., where an SO_2 add-on emission control is used or where fuel with different sulfur contents are blended), use an additional (lower) measurement range. For this second range, use Equation A–2 to calculate the maximum expected concentration (MEC) for units with emission controls. For units blending fuels, calculate the MEC using a best estimate of the highest sulfur content and lowest gross calorific value expected for the blend and inserting these values into Equation A–1. If an SO_2 CEMS is already installed, the owner or operator may calculate an MEC based upon the maximum concentration measured by the CEMS over a thirty-day period, provided that there have been no full-scale exceedances since the range was last selected. Multiply the maximum expected concentration by 125 percent, and round up the resultant concentration to the nearest multiple of 10 ppm to determine the span value for the additional (lower) range. The span value of this additional range will also be used to determine concentrations of the calibration gases for this additional range. Report the full-scale range setting and calculations of the MEC and span in the monitoring plan for the unit. Select the full-scale range of the instrument of this additional (lower) range to be consistent with section 2.1 of this appendix, and to be greater than or equal to the lower range span value. This selected monitor range with a span rounded up from 125 percent of the MEC will be the ''low-scale'' of the SO_2 pollutant concentration monitor. Units using a low-scale range must also be capable of accurately measuring the anticipated concentrations up to and including 125 percent of the maximum potential concentration. If an existing State, local, or Federal requirement for span of an SO_2 pollutant concentration monitor requires a span other than that required in this section, but less than that required for the high-scale by this appendix, the State, local or Federal span value may be approved, where a satisfactory explanation is included in the monitoring plan.

MEC=MPC[(100–RE)/100] (Eq. A–2)

Where:

MEC=Maximum expected concentration (ppm).

MPC=Maximum potential concentration (ppm), as determined by Eq. A–1a or A–1b.

RE = Expected average design removal efficiency of control equipment (%).

2.1.1.3 Auto-ranging Monitors

For monitors that can continuously and automatically adjust their range of measurement, the monitor must be capable at any time of accurately measuring up to 125 percent of the maximum potential concentration, as calculated using Equation A–1a or A–1b. Define the span value(s) for an auto-

ranging monitor as 125 percent of the maximum potential concentration and 125 percent of the maximum expected concentration if a second span is determined to be necessary under section 2.1.1.2 of this appendix. Determine concentrations of the calibration gases based upon the span value(s).

2.1.1.4 Adjustment of Span

Wherever the SO_2 concentration exceeds the maximum potential concentration but does not exceed the full-scale range during more than one clock-hour and the monitor can measure and record the SO_2 concentration accurately, it may be reported for use in the Acid Rain Program. If the concentration exceeds the monitor's ability to measure and record values accurately during a clock hour, and the full-scale exceedance is not during an out-of-control period, report the full-scale value as the SO_2 concentration for that clock hour. If full-scale exceedances occur during more than one clock hour since the last adjustment of the full-scale range setting, adjust the full-scale range setting to prevent future exceedances.

Whenever the fuel supply or emission controls change such that the maximum expected or potential concentration may change significantly, adjust the span and range setting to assure the continued proper operation of the monitoring system. Determine the adjusted span using the procedures in sections 2.1.1.1 or 2.1.1.2 of this appendix. Select the full scale range of the instrument to be greater than or equal to the new span value and to be consistent with the guidelines of section 2.1 of this appendix. Record and report the new full-scale range setting, calculations of the span, MPC, and MEC (if appropriate), and the adjusted span value, in an updated monitoring plan. In addition, record and report the adjusted span as part of the records for the daily calibration error test and linearity check specified by appendix B of this part. Whenever the span value is adjusted, use calibration gas concentrations based on the most recent adjusted span value. Perform a linearity check according to section 6.2 of this appendix whenever making a change to the monitor span or range. Recertification under §75.20(b) is required whenever a significant change in the monitor's range also requires an internal modification to the monitor (e.g., a change of measurement cell length).

2.1.2 NO_X Pollutant Concentration Monitors

Determine, as indicated below, the span value(s) for the NO_X pollutant concentration monitor so that all expected NO_X concentrations can be determined and recorded accurately including both the maximum expected and potential concentration.

2.1.2.1 Maximum Potential Concentration

The monitor must be capable of accurately measuring up to 125 percent of the maximum potential concentration (MPC) as determined below in this section. Use 800 ppm for coal-fired and 400 ppm for oil- or gas-fired units as the maximum potential concentration of NOx, unless a more representative MPC is determined by one of the following methods (If an MPC of 1600 ppm for coal-fired units or 480 ppm for oil- or gas-fired units was previously selected under this part, that value may still be used.): (1) NO_X emission test results, (2) historical CEM data over the previous 30 unit operating days; or (3) specific values based on boiler-type and fuel combusted, listed in Table 2–1 or Table 2–2 if other data under (1) or (2) were not available. Multiply the MPC by 125 percent and round up to the nearest multiple of 100 ppm to determine the span value. The span value will be used to determine the concentrations of the calibration gases.

Report the full-scale range setting, and calculations of the MPC, maximum potential NO_X emission rate, and span in the monitoring plan for the unit. Select the full-scale range of the instrument to be consistent with section 2.1 of this appendix, and to be greater than or equal to the span value. This selected monitor range with a span rounded up from 125 percent of the maximum potential concentration will be the ''high-scale'' of the NO_X pollutant concentration monitor.

If NO_X emission testing is used to determine the maximum potential NO_X concentration, use the following guidelines: Use Method 7E from appendix A of part 60 of this chapter to measure total NO_X concentration. Operate the unit, or group of units sharing a common stack, at the minimum safe and stable load, the normal load, and the maximum load. If the normal load and maximum load are identical, an intermediate level need not be tested. Operate at the highest excess O_2 level expected under normal operating conditions. Make at least three runs with three traverse points of at least 20 minutes duration at each operating condition. Select the highest NO_X concentration from all measured values as the maximum potential concentration for NOx. If historical CEM data are used to determine the MPC, the data must represent various operating conditions, including the minimum safe and stable load, normal load, and maximum load. Calculate the MPC and span using the highest hourly NO_X concentration in ppm. If no test data or historical CEM data are available, use Table 2–1 or Table 2–2 to estimate the maximum potential concentration based upon boiler type and fuel used.

TABLE 2–1.—MAXIMUM POTENTIAL CONCENTRATION FOR NO_X—Coal-Fired Units

Unit type	Maximum potential concentration for NO_X (ppm)
Tangentially-fired dry bottom and fluidized bed	460
Wall-fired dry bottom, turbo-fired dry bottom, stokers	675
Roof-fired (vertically-fired) dry bottom, cell burners, arch-fired	975
Cyclone, wall-fired wet bottom, wet bottom turbo-fired	1200
Others	As approved by the Administrator.

TABLE 2–2.—MAXIMUM POTENTIAL CONCENTRATION FOR NO_X—Gas- And Oil-Fired Units

Unit type	Maximum potential concentration for NO_X (ppm)
Tangentially-fired dry bottom	380
Wall-fired dry bottom	600
Roof-fired (vertically-fired) dry bottom, arch-fired	550
Existing combustion turbine or combined cycle turbine	200
New stationary gas turbine/combustion turbine	50
Others	As approved by the Administrator.

2.1.2.2 Maximum Expected Concentration

If the majority of NO_X concentrations are expected to be less than 25 percent of the full-scale range of the instrument selected under section 2.1.2.1 of this appendix (e.g., where a NO_X add-on emission control is used) use a ''low-scale'' measurement range. For units with add-on emission controls, determine the maximum expected concentration (MEC) of NO_X using Equation A–2, inserting the maximum potential concentration, as determined using the procedures in section 2.1.2.1 of this appendix. Where Equation A–2 is not appropriate, set the MEC, either (1) by measuring the NO_X concentration using the testing procedures in section 2.1.2.1 of this appendix, or (2) by using historical CEM data over the previous 30 unit operating days. Other methods for determining the MEC may be accepted if they are satisfactorily explained in the monitoring plan. If an existing State, local, or Federal requirement for span of an NO_X pollutant concentration monitor requires a span other than that required in this section, but less than that required for the high scale by this appendix, the State, local, or Federal span value may be approved, where a satisfactory explanation is included in the monitoring plan. Calculate the span for the additional (lower) range by multiplying the maximum expected concentration by 125 percent and by rounding up the resultant concentration to the nearest multiple of 10 ppm. The span value of this additional (lower) range will also be used to determine the concentrations of the calibration gases. Include the full-scale range setting and calculations of the MEC and span in the monitoring plan for the unit. Select the full-scale range of the instrument to be consistent with section 2.1 of this appendix, and to be greater or equal to the lower range span value. This selected monitor range with a span rounded up from 125 percent of the maximum expected concentration is the ''low-scale'' of NO_X pollutant concentration monitors. NO_X pollutant concentration monitors on affected units with NO_X emission controls, or on other units with monitors using a low-scale range, must also be capable of accurately measuring up to 125 percent of the maximum potential concentration. For dual-span NO_X pollutant concentration monitors, determine the concentration of calibration gases based on both span values.

2.1.2.3 Auto-ranging monitors

For monitors that can continuously and automatically adjust their range of measurement, the monitor must be capable at any time of accurately measuring up to 125 percent of the maximum potential concentration as defined in section 2.1.2.1 of this appendix. Define the span value(s) for an auto-ranging monitor as 125 percent of the maximum potential concentration and 125 percent of the maximum expected concentration if a second span is determined to be necessary under section 2.1.2.2 of this appendix. Determine concentrations of the calibration gases based upon the span value(s).

2.1.2.4 Adjustment of Span

Wherever the actual NO_X concentration exceeds the maximum potential concentration but does not exceed the full-scale range for more than one clock-hour and the monitor can measure and record the NO_X concentration values accurately, the NO_X concentration values may be reported for use in the Acid Rain Program. If the concentration exceeds the monitor's ability to measure and record values accurately during a clock hour, and the full-scale exceedance is not during an out-of-control period, report the full-scale value as the NO_X concentration for that clock hour. If full-scale exceedances occur during more than one clock hour since the last adjustment of the full-scale range

setting, adjust the full-scale range setting to prevent future exceedances.

Whenever the fuel supply, emission controls, or other process parameters change such that the maximum expected concentration or the maximum potential concentration may change significantly, adjust the NO_X pollutant concentration span and monitor range to assure the continued accuracy of the monitoring system. Determine the adjusted span value using the procedures in sections 2.1.2.1 or 2.1.2.2 of this appendix. Select the new full scale range of the instrument to be greater than or equal to the adjusted span value and to be consistent with the guidelines of section 2.1 of this appendix. Record and report the new full-scale range setting, calculations of the span value, MPC, and MEC (if appropriate), maximum potential NO_X emission rate and the adjusted span value in an updated monitoring plan for the unit. In addition, record and report the adjusted span as part of the records for the daily calibration error test and linearity check required by appendix B of this part. Whenever the span value is adjusted, use calibration gas concentrations based on the most recent adjusted span value. Perform a linearity check according to section 6.2 of this appendix whenever making a change to the monitor span or range. Recertification under §75.20(b) is required whenever a significant change is made in the monitor's range that requires an internal modification to the monitor (e.g., a change of measurement cell length).

2.1.3 CO_2 and O_2 Monitors

Define the ''high scale'' span value as 20 percent O_2 or 20 percent CO_2. All O_2 and CO_2 analyzers must have ''high-scale'' measurement capability. Select the full-scale range of the instrument to be consistent with section 2.1 of this appendix, and to be greater than or equal to the span value. If the O_2 or CO_2 concentrations are expected to be consistently low, a ''low scale'' measurement range may be used for increased accuracy, provided that it is consistent with section 2.1 of this appendix. Include a span value for the low-scale range in the monitoring plan. Select the calibration gas concentrations as percentages of the span value.

2.1.4 Flow Monitors

Select the full-scale range of the flow monitor so that it is consistent with section 2.1 of this appendix, and can accurately measure all potential volumetric flow rates at the flow monitor installation site. For this purpose, determine the span value of the flow monitor using the following procedure. Calculate the maximum potential velocity (MPV) using Equation A–3a or A–3b or determine the MPV or maximum potential flow rate (MPF) in scfh (wet basis) from velocity traverse testing. If using test values, use the highest velocity measured at or near the maximum unit operating load. Calculate the MPV in units of wet standard fpm. Then, if necessary, convert the MPV to equivalent units of flow rate (e.g., scfh or kscfh) or differential pressure (inches of water), consistent with the measurement units used for the daily calibration error test to calculate the span value. Multiply the MPV (in equivalent units) by 125 percent, and round up the result to no less than 2 significant figures. Report the full-scale range setting, and calculations of the span value, MPV and MPF in the monitoring plan for the unit.

$$MPV = \left(\frac{F_d H_f}{A}\right)\left(\frac{20.9}{20.9 - \%O_{2d}}\right)\left[\frac{100}{100 - \%H_2O}\right] \qquad \text{(Eq. A–3a)}$$

or

$$MPV = \left(\frac{F_c H_f}{A}\right)\left(\frac{100}{\%CO_{2d}}\right)\left[\frac{100}{100 - \%H_2O}\right] \qquad \text{(Eq. A–3b)}$$

Where:

MPV=maximum potential velocity (fpm, standard wet basis),

Fd=dry-basis F factor (dscf/mmBtu) from Table 1, Appendix F of this part,

Fc=carbon-based F factor (scfCO2/mmBtu) from Table 1, Appendix F of this part,

Hf=maximum heat input (mmBtu/minute) for all units, combined, exhausting to the stack or duct where the flow monitor is located,

A=inside cross sectional area (ft2) of the flue at the flow monitor location,

%O2d=maximum oxygen concentration, percent dry basis, under normal operating conditions,

%CO2d=minimum carbon dioxide concentration, percent dry basis, under normal operating conditions,

%H_2O = maximum percent flue gas moisture content under normal operating conditions.

If the volumetric flow rate exceeds the maximum potential flow calculated from the maximum potential velocity but does not exceed the full scale range during more than one clock hour and the flow monitor can accurately measure and record values, the flow rate may be reported for use in the Acid Rain Program. If the volumetric flow rate exceeds the monitor's ability to measure and record values accurately during a clock hour, and the full-scale exceedance is not during an out-of-control period, report the full-scale value as the flow rate for that clock hour. If full-scale exceedance occurs during more than one hour since the last adjustment of the full-scale range setting, adjust the full-scale range setting to prevent future exceedances. If the fuel supply, process parameters or other conditions change such that the maximum potential velocity may change significantly, adjust the range to assure the continued accuracy of the flow monitor. Calculate an adjusted span using the procedures in this section. Select the full-scale range of the instrument to be greater than or equal to the adjusted span value. Record and report the new full-scale range setting, calculations of the span value, MPV, and MPF, and the adjusted span value in an updated monitoring plan for the unit. Record and report the adjusted span and reference values as parts of the records for the calibration error test required by appendix B of this part. Whenever the span value is adjusted, use reference values for the calibration error test based on the most recent adjusted span value.

Perform a calibration error test according to section 2.1.2 of this appendix whenever making a change to the flow monitor span or range. Recertification under §75.20(b) is required whenever making a significant change in the flow monitor's range that requires an internal modification to the monitor.

2.2 Design for Quality Control Testing

2.2.1 Pollutant Concentration and CO_2 or O_2 Monitors

Design and equip each pollutant concentration and CO_2 or O_2 monitor with a calibration gas injection port that allows a check of the entire measurement system when calibration gases are introduced. For extractive and dilution type monitors, all monitoring components exposed to the sample gas, (e.g., sample lines, filters, scrubbers, conditioners, and as much of the probe as practicable) are included in the measurement system. For in situ type monitors, the calibration must check against the injected gas for the performance of all active electronic and optical components (e.g. transmitter, receiver, analyzer).

Design and equip each pollutant concentration or CO_2 or O_2 monitor to allow daily determinations of calibration error (positive or negative) at the zero- and high-level concentrations specified in Section 5.2 of this Appendix.

2.2.2 Flow Monitors

Design all flow monitors to meet the applicable performance specifications.

2.2.2.1 Calibration Error Test

Design and equip each flow monitor to allow for a daily calibration error test consisting of at least two reference values: (1) Zero to 20 percent of span or an equivalent reference value (e.g., pressure pulse or electronic signal) and (2) 50 to 70 percent of span. Flow monitor response, both before and after any adjustment, must be capable of being recorded by the data acquisition and handling system. Design each flow monitor to allow a daily calibration error test of (1) the entire flow monitoring system, from and including the probe tip (or equivalent) through and including the data acquisition and handling system, or (2) the flow monitoring system from and including the transducer through and including the data acquisition and handling system.

2.2.2.2 Interference Check

Design and equip each flow monitor with a means to ensure that the moisture expected to occur at the monitoring location does not interfere with the proper functioning of the flow monitoring system. Design and equip each flow monitor with a means to detect, on at least a daily basis, pluggage of each sample line and sensing port, and malfunction of each resistance temperature detector (RTD), transceiver or equivalent.

Design and equip each differential pressure flow monitor to provide (1) an automatic, periodic back purging (simultaneously on both sides of the probe) or equivalent method of sufficient force and frequency to keep the probe and lines sufficiently free of obstructions on at least a daily basis to prevent velocity sensing interference, and (2) a means for detecting leaks in the system on at least a quarterly basis (manual check is acceptable).

Design and equip each thermal flow monitor with a means to ensure on at least a daily basis that the probe remains sufficiently clean to prevent velocity sensing interference.

Design and equip each ultrasonic flow monitor with a means to ensure on at least a daily basis that the transceivers remain sufficiently clean (e.g., backpurging system) to prevent velocity sensing interference.

3. Performance Specifications

3.1 Calibration Error

The initial calibration error performance specification of SO_2 and NO_x pollutant concentration monitors shall not deviate from the reference value of the calibration gas by more than 2.5 percent based upon the span of the instrument, as calculated using Eq. A–5 of this appendix. Alternatively, where the span value is less than 200 ppm, calibration error test results are also acceptable if the absolute value of the difference between the monitor response value and the reference value, $|R–A|$ in Equation A–5 of this appendix, is less than or equal to 5 ppm. The calibration error of CO_2 or O_2 monitors shall not deviate from the reference value of the zero- or high-level calibration gas by more than 0.5 percent O_2 or CO_2 as calculated using the term $|R–A|$ in the numerator of Eq. A–5 of this appendix. The calibration error of flow monitors shall not exceed 3.0 percent based upon the span of the instrument as calculated using Eq. A–6 of this appendix.

3.2 Linearity Check

For SO_2 and NO_x pollutant concentration monitors, the error in linearity for each calibration gas concentration (low-, mid-, and high-levels) shall not exceed or deviate from the reference value by more than 5.0 percent (as calculated using Equation A–4 of this appendix). Linearity check results are also acceptable if the absolute value of the difference between the average of the monitor response values and the average of the reference values, $|R–A|$ in Equation A–4 of this appendix, is less than or equal to 5 ppm. For CO_2 or O_2 monitors:

(1) The error in linearity for each calibration gas concentration (low-, mid-, and high-levels) shall not exceed or deviate from the reference value by more than 5.0 percent as calculated using Equation A–4 of this appendix; or

(2) The absolute value of the difference between the average of the monitor response values and the average of the reference values, $|R–A|$ in Equation A–4 of this appendix, shall be less than or equal to 0.5 percent CO_2 or O_2, whichever is less restrictive.

3.3 Relative Accuracy

3.3.1 Relative Accuracy for SO_2

The relative accuracy for SO_2 pollutant concentration monitors and for SO_2-diluent continuous emission monitoring systems used by units with a qualifying Phase I technology for the period during which the units are required to monitor SO_2 emission removal efficiency, from January 1, 1997 through December 31, 1999, shall not exceed 10.0 percent except as provided below in this section.

For affected units where the average of the monitor measurements of SO_2 concentration during the relative accuracy test audit is less than or equal to 250.0 ppm (or for SO_2-diluent monitors, less than or equal to 0.5 lb/mmBTU), the mean value of the monitor measurements shall not exceed ±15.0 ppm of the reference method mean value (or, for SO_2-diluent monitors, not to exceed ±0.03 lb/mmBTU for the period during which the units are required to monitor SO_2 emission removal efficiency, from January 1, 1997 through December 31, 1999) wherever the relative accuracy specification of 10.0 percent is not achieved.

3.3.2 Relative Accuracy for NO_x

The relative accuracy for NO_x continuous emission monitoring systems shall not exceed 10.0 percent.

For affected units where the average of the monitoring system measurements of NO_x emission rate during the relative accuracy test audit is less than or equal to 0.20 lb/mmBtu, the mean value of the NO_x continuous emission monitoring system measurements shall not exceed ±0.02 lb/mmBtu of the reference method mean value wherever the relative accuracy specification of 10.0 percent is not achieved.

3.3.3 Relative Accuracy for CO_2 and O_2 Pollutant Concentration Monitors

The relative accuracy for CO_2 and O_2 monitors shall not exceed 10.0 percent. The relative accuracy test results are also acceptable if the mean difference of the CO_2 or O_2 monitor measurements and the corresponding reference method measurement, calculated using Equation A–7 of this appendix, is within 1.0 percent CO_2 or O_2.

3.3.4 Relative Accuracy for Flow

Except as provided below in this section, the relative accuracy for flow monitors, where volumetric gas flow is measured in scfh, shall not exceed 15.0 percent through December 31, 1999. Beginning on January 1, 2000 (except as provided below in this section), the relative accuracy of flow monitors shall not exceed 10.0 percent.

For affected units where the average of the flow monitor measurements of gas velocity during one or more operating levels of the relative accuracy test audit is less than or equal to 10.0 fps, the mean value of the flow monitor velocity measurements shall not exceed ±2.0 fps of the reference method mean value in fps wherever the relative accuracy specification above is not achieved.

3.3.5 Combined SO_2/Flow Monitoring System [Reserved]

3.4 Bias

3.4.1 SO_2 Pollutant Concentration Monitors and NO_x Continuous Emission Monitoring Systems.

SO_2 pollutant concentration monitors and NO_x continuous emission monitoring systems shall not be biased low as determined by the test procedure in section 7.6 of this appendix. The bias specification applies to all SO_2 pollutant concentration monitors, including those measuring an average SO_2 concentration of 250.0 ppm or less, and to all NO_x continuous emission monitoring systems, including those measuring an average NO_x emission rate of 0.20 lb/mmBtu or less

3.4.2 Flow Monitors

Flow monitors shall not be biased low as determined by the test procedure in section 7.6 of this appendix. The bias specification applies to all flow monitors including those measuring an average gas velocity of 10.0 fps or less.

3.5 Cycle Time

The cycle time for pollutant concentration monitors, and continuous emission monitoring systems shall not exceed 15 min.

4. DATA ACQUISITION AND HANDLING SYSTEMS

Automated data acquisition and handling systems shall: (1) Read and record the full range of pollutant concentrations and volumetric flow from zero through span; and (2) provide a continuous, permanent record of all measurements and required information as an ASCII flat file capable of transmission via an IBM-compatible personal computer diskette or other electronic media. These systems also shall have the capability of interpreting and converting the individual output signals from an SO_2 pollutant concentration monitor, a flow monitor, and a NO_x continuous emission monitoring system to produce a continuous readout of pollutant mass emission rates in the units of the standard. Where CO_2 emissions are measured with a continuous emission monitoring system, the data acquisition and handling system shall also produce a readout of CO_2 mass emissions in tons.

Data acquisition and handling systems shall also compute and record monitor calibration error; any bias adjustments to pollutant concentration, flow rate, or NO_x emission rate data; and all missing data procedure statistics specified in subpart D of this part.

For an excepted monitoring system under appendix D or E of this part, data acquisition and handling systems shall:

(1) Read and record the full range of fuel flowrate through the upper range value;

(2) Calculate and record intermediate values necessary to obtain emissions, such as mass fuel flowrate and heat input rate;

(3) Calculate and record emissions in units of the standard (lb/hr of SO_2, lb/mmBtu of NO_X);

(4) Predict and record NO_X emission rate using the heat input rate and the NO_X/heat input correlation developed under appendix E of this part;

(5) Calculate and record all missing data substitution values specified in appendix D or E of this part; and

(6) Provide a continuous, permanent record of all measurements and required information as an ASCII flat file capable of transmission via an IBM-compatible personal computer diskette or other electronic media.

5. CALIBRATION GAS

5.1 Reference Gases

For the purposes of part 75, calibration gases include the following.

5.1.1 Standard Reference Materials

These calibration gases may be obtained from the National Institute of Standards and Technology (NIST) at the following address: Quince Orchard and Cloppers Road, Gaithersburg, Maryland 20899.

5.1.2 NIST Traceable Reference Materials

Contact the Quality Assurance Division (MD 77), Environmental Monitoring System Laboratory, U.S. Environmental Protection Agency, Research Triangle Park, North Carolina 27711 or the Organic Analytical Research Division of NIST at the above address for Standard Reference Materials for a list of vendors and cylinder gases.

5.1.3 EPA Traceability Protocol 1 Gases

Protocol 1 gases must be vendor-certified to be within 2.0 percent of the concentration specified on the cylinder label (tag value).

5.1.4 Research Gas Mixtures

Contact the Quality Assurance Division (MD 77), Environmental Monitoring System Laboratory, U.S. Environmental Protection Agency, Research Triangle Park, North Carolina 27711 or the Organic Analytical Research Division of NIST at the above address for Standard Reference Materials for a list of vendors and cylinder gases.

5.1.5 Zero Air Material

Use zero air material for calibrating at zero-level concentrations only. Zero air material shall be certified by the gas vendor or instrument manufacturer or vendor not to contain concentrations of SO_2 or NO_X above

0.1 ppm or CO_2 above 400 ppm, and not to contain concentrations of other gases that will interfere with instrument readings or cause the instrument to read concentrations of SO_2, NO_X, or CO_2.

5.1.6 NIST/EPA-approved Certified Reference Materials

Existing certified reference materials as previously certified under EPA's former certified reference material program may be used for the remainder of the cylinder's shelf life.

5.2 Concentrations

Four concentration levels are required as follows.

5.2.1 Zero-level Concentration

0 to 20 percent of span, including span for high scale or both low- and high-scale for SO_2 and NO_x pollutant concentration monitors, as appropriate.

5.2.2 Low-level Concentration

20 to 30 percent of span, including span for high scale or both low- and high-scale for SO_2 and NO_x pollutant concentration monitors, as appropriate.

5.2.3 Mid-level Concentration

50 to 60 percent of span, including span for high scale or both low- and high-scale for SO_2 and NO_x pollutant concentration monitors, as appropriate.

5.2.4 High-level Concentration

80 to 100 percent of span, including span for high scale or both low- and high-scale for SO_2 and NO_x pollutant concentration monitors, as appropriate.

6. Certification Tests and Procedures

6.1 Pretest Preparation

Install the components of the continuous emission monitoring system (i.e., pollutant concentration monitors, CO_2 or O_2 monitor, and flow monitor) as specified in sections 1, 2, and 3 of this appendix, and prepare each system component and the combined system for operation in accordance with the manufacturer's written instructions. Operate the unit(s) during each period when measurements are made. Units may be tested on nonconsecutive days. To the extent practicable, test the DAHS software prior to testing the monitoring hardware.

6.2 Linearity Check

Measure the linearity of each pollutant concentration monitor and CO_2 or O_2 monitor according to the following procedures.

Challenge each pollutant concentration or CO_2 or O_2 monitor with NIST/EPA-approved certified reference material, NIST traceable reference material, standard reference material, or Protocol 1 calibration gases certified to be within 2 percent of the concentration specified on the label at the low-, mid-, or high-level concentrations specified in section 5.2 of this appendix. For units using emission controls and other units using a maximum expected concentration value to determine calibration gases, perform a linearity check on both the low- and high-scales.

Introduce the calibration gas at the gas injection port, as specified in section 2.2.1 of this appendix. Operate each monitor at its normal operating temperature and conditions. For extractive and dilution type monitors, pass the calibration gas through all filters, scrubbers, conditioners, and other monitor components used during normal sampling and through as much of the sampling probe as is practical. For in situ type monitors, perform calibration checking all active electronic and optical components, including the transmitter, receiver, and analyzer.

Repeat the procedure for SO_2 and NO_x pollutant concentration monitors using the low-scale for units equipped with emission controls with dual span monitors. Challenge the monitor three times with each reference gas. Do not use the same gas twice in succession. Record the monitor response from the data acquisition and handling system (see example data sheet in Figure 1). For each concentration, use the average of the responses to determine the error in linearity using Equation A–4 in this appendix.

Linearity checks are acceptable for monitor or monitoring system certification if none of the test results exceed the applicable performance specifications in section 3.2 of this appendix.

6.3 7-Day Calibration Error Test

6.3.1 7-day Calibration Error Test for Pollutant Concentration Monitors and CO_2 and O_2 Monitors

Measure the calibration error of each pollutant concentration monitor and CO_2 or O_2 monitor once each day for 7 consecutive operating days according to the following procedures. (In the event that extended unit outages occur after the commencement of the test, the 7 consecutive operating days need not be 7 consecutive calendar days.) Units using dual span monitors must perform the calibration error test on both high- and low-scales of the pollutant concentration monitor.

Do not make manual adjustments to the monitor settings during the 7-day test. If automatic adjustments are made, conduct the calibration error test in a way that the magnitude of the adjustments can be determined and recorded.

The calibration error tests should, to the extent practicable, be approximately 24

hours apart (unless the 7-day test is performed over non-consecutive days). Perform calibration error tests at two concentrations: (1) Zero-level and (2) high-level, as specified in section 5.2 of this appendix. In addition, repeat the procedure for SO_2 and NO_x pollutant concentration monitors using the low-scale for units equipped with emission controls or other units with dual span monitors. Use only NIST Traceable Reference Material (NTRM), standard reference material, Protocol 1 calibration gases certified by the vendor to be within 2 percent of the label value, or where applicable, zero ambient air material as defined in §72.2 of this part.

Introduce the calibration gas at the gas injection port, as specified in section 2.2.1 of this appendix. Operate each monitor in its normal sampling mode. For extractive and dilution type monitors, pass the audit gas through all filters, scrubbers, conditioners, and other monitor components used during normal sampling and through as much of the sampling probe as is practical. For in situ type monitors, perform calibration checking all active electronic and optical components, including the transmitter, receiver, and analyzer. Challenge the pollutant concentration monitors and CO_2 or O_2 monitors once with each gas. Record the monitor response from the data acquisition and handling system. Using Equation A–5 of this appendix, determine the calibration error at each concentration once each day (at 24-hour intervals) for 7 consecutive days according to the procedures given in this section.

Calibration error tests are acceptable for monitor or monitoring system certification if none of these daily calibration error test results exceed the applicable performance specifications in section 3.1 of this appendix. The provisions in this section are suspended from July 17, 1995 through December 31, 1996.

6.3.2 7-Day Calibration Error Test for Flow Monitors

Measure the calibration error of each flow monitor according to the following procedures.

Introduce the reference signal corresponding to the values specified in section 2.2.2.1 of this appendix to the probe tip (or equivalent), or to the transducer. During the 7-day certification test period, conduct the calibration error test once each day while the unit is operating (as close to 24-hour intervals as practicable). In the event that extended unit outages occur after the commencement of the test, the 7 consecutive operating days need not be 7 consecutive calendar days. Record the flow monitor responses by means of the data acquisition and handling system. Calculate the calibration error using Equation A–6 of this appendix.

Do not perform any corrective maintenance, repair, replacement or manual adjustment upon the flow monitor during the 7-day certification test period other than that required in the monitor operation and maintenance manual. If the flow monitor operates within the calibration error performance specification, (i.e., less than or equal to 3 percent error each day and requiring no corrective maintenance, repair, replacement or manual adjustment during the 7-day test period) the flow monitor passes the calibration error test portion of the certification test. Wherever automatic adjustments are made, record the magnitude of the adjustments. Record all maintenance and required adjustments. Record output readings from the data acquisition and handling system before and after all adjustments. The provisions in this section are suspended from July 17, 1995 through December 31, 1996.

6.3.3 Pollutant Concentration Monitor and CO_2 or O_2 Monitor 7-day Calibration Error Test

Measure the calibration error of each pollutant concentration monitor and CO_2 or O_2 monitor while the unit is operating once each day for 7 consecutive operating days according to the following procedures. (In the event that extended unit outages occur after the commencement of the test, the 7 consecutive unit operating days need not be 7 consecutive calendar days.) Units using dual span monitors must perform the calibration error test on both high- and low-scales of the pollutant concentration monitor.

Do not make manual adjustments to the monitor settings until after taking measurements at both zero and high concentration levels for that day during the 7-day test. If automatic adjustments are made, conduct the calibration error test in a way that the magnitude of the adjustments can be determined and recorded. Record and report test results for each day using the unadjusted concentration or flow rate measured in the calibration error test prior to making any manual adjustment or resetting the calibration.

The calibration error tests should be approximately 24 hours apart (unless the 7-day test is performed over non-consecutive days). Perform calibration error tests at two concentrations: (1) Zero-level and (2) high-level, as specified in section 5.2 of this appendix. In addition, repeat the procedure for SO_2 and NO_X pollutant concentration monitors using the low-scale for units equipped with emission controls or other units with dual span monitors. Use only NIST traceable reference material, standard reference material, NIST/EPA-approved certified reference material, research gas material, Protocol 1 calibration gases certified by the vendor to be within 2 percent of the label value or zero air material for the zero level only.

Introduce the calibration gas at the gas injection port, as specified in section 2.2.1 of

this appendix. Operate each monitor in its normal sampling mode. For extractive and dilution type monitors, pass the audit gas through all filters, scrubbers, conditioners, and other monitor components used during normal sampling and through as much of the sampling probe as is practical. For in situ type monitors, perform calibration checking all active electronic and optical components, including the transmitter, receiver, and analyzer. Challenge the pollutant concentration monitors and CO_2 or O_2 monitors once with each gas. Record the monitor response from the data acquisition and handling system. Using Equation A–5 of this appendix, determine the calibration error at each concentration once each day (at 24-hour intervals) for 7 consecutive days according to the procedures given in this section.

Calibration error tests are acceptable for monitor or monitoring system certification if none of these daily calibration error test results exceed the applicable performance specifications in section 3.1 of this appendix.

6.3.4 Flow Monitor 7-day Calibration Error Test

Measure the calibration error of each flow monitor according to the following procedures.

Introduce the reference signal corresponding to the values specified in section 2.2.2.1 of this appendix to the probe tip (or equivalent), or to the transducer. During the 7-day certification test period, conduct the calibration error test while the unit is operating once each unit operating day (as close to 24-hour intervals as practicable). In the event that extended unit outages occur after the commencement of the test, the 7 consecutive operating days need not be 7 consecutive calendar days. Record the flow monitor responses by means of the data acquisition and handling system. Calculate the calibration error using Equation A–6 of this appendix.

Do not perform any corrective maintenance, repair, or replacement upon the flow monitor during the 7-day certification test period other than that required in the quality assurance/quality control (QA/QC) plan required by appendix B of this part. Do not make adjustments between the zero and high reference level measurements on any day during the 7-day test. If the flow monitor operates within the calibration error performance specification (i.e., less than or equal to 3 percent error each day and requiring no corrective maintenance, repair, or replacement during the 7-day test period) the flow monitor passes the calibration error test portion of the certification test. Record all maintenance activities and the magnitude of any adjustments. Record output readings from the data acquisition and handling system before and after all adjustments. Record and report all calibration error test results using the unadjusted flow rate measured in the calibration error test prior to resetting the calibration. Record all adjustments made during the seven day period at the time the adjustment is made and report them in the certification application.

6.4 Cycle Time/Response Time Test

Perform cycle time/response time tests for each pollutant concentration monitor, and continuous emission monitoring system according to the following procedures. Use a low-level and a high-level calibration gas (as defined in section 5.2 of this appendix) alternately. While the monitor or monitoring system is measuring and recording the concentration or emission rate, inject either a low-level concentration or a high-level concentration calibration gas into the injection port. Continue injecting the gas until a stable response is reached. Record the amount of time required for the monitor or monitoring system to complete 95.0 percent of the concentration or emission rate stepchange using data acquisition and handling system output. Then repeat the procedure with the other gas. For monitors or monitoring systems that perform a series of operations (such as purge, sample, and analyze), time the injections of the calibration gases so they will produce the longest possible response time. (Note: for the NO_x continuous emission monitoring system test and SO_2-diluent continuous emission monitoring system test, it will be necessary to simultaneously inject calibration gases into the pollutant and diluent monitors, in order to measure the step change in the lb/mmBtu emission rate.)

Cycle time/response time test results are acceptable for monitoring or monitoring system certification if none of the response times exceed 15 min. The provisions in this section 6.4 are suspended from July 17, 1995 through December 31, 1996.

6.4.1 Cycle Time Test

Perform cycle time tests for each pollutant concentration monitor, and continuous emission monitoring system while the unit is operating according to the following procedures.

Use a zero-level and a high-level calibration gas (as defined in section 5.2 of this appendix) alternately. To determine the upscale elapsed time, inject a zero-level concentration calibration gas into the probe tip (or injection port leading to the calibration cell, for in situ systems with no probe). Record the stable starting monitor value and start time. Next, allow the monitor to measure the concentration of flue gas emissions until the response stabilizes. Determine the upscale elapsed time as the time at which 95.0 percent of the step change is achieved between the stable starting gas value and the stable ending monitor value. Record the

stable ending monitor value, the end time, and the upscale elapsed time for the monitor using data acquisition and handling system output. Then repeat the procedure, starting by injecting the high-level gas concentration to determine the downscale elapsed time, which is the time at which 95.0 percent of the step change is achieved between the stable starting gas value and the stable ending monitor value. End the downscale test by measuring the concentration of flue gas emissions. Record the stable starting and ending monitor values, the start and end times, and the downscale elapsed time for the monitor using data acquisition and handling system output. A stable value is equivalent to a reading with a change of less than 1 percent of the span value for 30 seconds, or a reading with a change of less than 5 percent from the measured average concentration over 5 minutes.

For monitors or monitoring systems that perform a series of operations (such as purge, sample, and analyze), time the injections of the calibration gases so they will produce the longest possible cycle time. Record the span, the zero and high gas concentrations, the start and end times, the stable starting and ending monitor values, and the upscale and downscale elapsed times. Report the slower of the two elapsed times as the cycle time for the analyzer. (See Figure 5 at the end of this appendix.) For the NO_X continuous emission monitoring system test and SO_2-diluent continuous emission monitoring system test, record and report the longer cycle time of the two component analyzers as the system cycle time.

For time-shared systems, this procedure must be done for all probe locations that will be polled within the same 15-minute period during monitoring system operations. For cycle time results for a time-shared system, add together the longest cycle time obtained from each location. Report the sum of the cycle time at each location plus the time required for all purge cycles (as determined by the CEMS manufacturer) for each location as the cycle time for each and all of those systems. For monitors with dual ranges, perform the test on the range giving the longest cycle time.

Cycle time test results are acceptable for monitor or monitoring system certification if none of the cycle times exceed 15 minutes.

6.5 Relative Accuracy and Bias Tests

Perform relative accuracy test audits for each CO_2 and SO_2 pollutant concentration monitor, each O_2 monitor used to calculate heat input or CO_2 concentration, each SO_2-diluent continuous emission monitoring system (lb/mmBtu) used by units with a qualifying Phase I technology for the period during which the units are required to monitor SO_2 emission removal efficiency, from January 1, 1997 through December 31, 1999, flow monitor, and NO_X continuous emission monitoring system. For monitors or monitoring systems with dual ranges, perform the relative accuracy test on one range measuring emissions in the stack at the time of testing. Record monitor or monitoring system output from the data acquisition and handling system. Perform concurrent relative accuracy test audits for each SO_2 pollutant concentration monitor and flow monitor, at least once a year (see section 2.3.1 of appendix B of this part), during the flow monitor test at the normal operating level specified in section 6.5.2 of this appendix. Concurrent relative accuracy test audits may be performed by conducting simultaneous SO_2 and flow relative accuracy test audit runs, or by alternating an SO_2 relative accuracy test audit run with a flow relative accuracy test audit run until all relative accuracy test audit runs are completed. Where two or more probes are in the same proximity, care should be taken to prevent probes from interfering with each other's sampling. For each SO_2 pollutant concentration monitor, each flow monitor, and each NO_X continuous emission monitoring system, calculate bias, as well as relative accuracy, with data from the relative accuracy test audits.

Complete each relative accuracy test audit within a 7-day period while the unit (or units, if more than one unit exhausts into the flue) is combusting the fuel that is normal for that unit. When relative accuracy test audits are performed on continuous emission monitoring systems or component(s) on bypass stacks/ducts, use the fuel normally combusted by the unit (or units, if more than one unit exhausts into the flue) when emissions exhaust through the bypass stack/ducts. Do not perform corrective maintenance, repairs, replacements or adjustments during the relative accuracy test audit other than as required in the operation and maintenance manual.

6.5.1 SO_2, O_2 and CO_2 Pollutant Concentration Monitors and SO_2-Diluent and NO_X Continuous Emission Monitoring Systems

Perform relative accuracy test audits for each SO_2, O_2 or CO_2 pollutant concentration monitor or NO_X continuous emission monitoring system or SO_2-diluent continuous emission monitoring system (lb/mmBtu) used by units with a qualifying Phase I technology for the period during which the units are required to monitor SO_2 emission removal efficiency, from January 1, 1997 through December 31, 1999, at a normal operating level for the unit (or combined units, if common stack).

6.5.2 Flow Monitors

Except for flow monitors on bypass stacks/ducts and peaking units, perform relative accuracy test audits for each flow monitor at

three different exhaust gas velocities, expressed in terms of percent of flow monitor span, or different operating or load levels. For a common stack/duct, the three different exhaust gas velocities may be obtained from frequently used unit/load combinations for units exhausting to the common stack. Select the operating levels as follows: (1) A frequently used low operating level selected within the range between the minimum safe and stable operating level and 50 percent load, (2) a frequently used high operating level selected within the range between 80 percent of the maximum operating level and the maximum operating level, and (3) the normal operating level. If the normal operating level is within 10.0 percent of the maximum operating level of either (1) or (2) above, use a level that is evenly spaced between the low and high operating levels used. The maximum operating level shall be equal to the nameplate capacity less any physical or regulatory limitations or other deratings. Calculate flow monitor relative accuracy at each of the three operating levels. If a flow monitor fails the relative accuracy test on any of the three levels of a three-level relative accuracy test audit, the three-level relative accuracy test audit must be repeated. For flow monitors on bypass stacks/ducts and peaking units, the flow monitor relative accuracy test audit is required only at the normal operating level.

6.5.3 CO_2 Pollutant Concentration Monitors

Perform relative accuracy test audits for each CO_2 monitor (measuring in percent CO_2) at a normal operating level for the unit (or combined units, if common stack).

6.5.4 Calculations

Using the data from the relative accuracy test audits, calculate relative accuracy and bias in accordance with the procedures and equations specified in section 7 of this appendix.

6.5.5 Reference Method Measurement Location

Select a location for reference method measurements that is (1) accessible; (2) in the same proximity as the monitor or monitoring system location; and (3) meets the requirements of Performance Specification 2 in appendix B of part 60 of this chapter for SO_2 and NO_X continuous emission monitoring systems, Performance Specification 3 in appendix B of part 60 of this chapter for CO_2 or O_2 monitors, or Method 1 (or 1A) in appendix A of part 60 of this chapter for volumetric flow, except as otherwise indicated in this section or as approved by the Administrator.

6.5.6 Reference Method Traverse Point Selection

Select traverse points that (1) ensure acquisition of representative samples of pollutant and diluent concentrations, moisture content, temperature, and flue gas flow rate over the flue cross section; and (2) meet the requirements of Performance Specification 2 in appendix B of part 60 of this chapter (for SO_2 and NO_X), Performance Specification 3 in appendix B of part 60 of this chapter (for O_2 and CO_2), Method 1 (or 1A) (for volumetric flow), Method 3 (for molecular weight), and Method 4 (for moisture determination) in appendix A of part 60 of this chapter.

6.5.7 Sampling Strategy

Conduct the reference method tests so they will yield results representative of the pollutant concentration, emission rate, moisture, temperature, and flue gas flow rate from the unit and can be correlated with the pollutant concentration monitor, CO_2 or O_2 monitor, flow monitor, and SO_2 or NO_X continuous emission monitoring system measurements. Conduct the diluent (O_2 or CO_2) measurements and any moisture measurements that may be needed simultaneously with the pollutant concentration and flue gas flow rate measurements. If an O_2 monitor is used as a CO_2 continuous emission monitoring system, but not as a diluent monitor, measure CO_2 with the reference method. To properly correlate individual SO_2 and CO_2 pollutant concentration monitor data, O_2 monitor data, SO_2 or NO_X continuous emission monitoring system data (in lb/mmBtu), and volumetric flow rate data with the reference method data, mark the beginning and end of each reference method test run (including the exact time of day) on the individual chart recorder(s) or other permanent recording device(s).

6.5.8 Correlation of Reference Method and Continuous Emission Monitoring System

Confirm that the monitor or monitoring system and reference method test results are on consistent moisture, pressure, temperature, and diluent concentration basis (e.g., since the flow monitor measures flow rate on a wet basis, Method 2 test results must also be on a wet basis). Compare flow-monitor and reference method results on a scfh basis. Also, consider the response times of the pollutant concentration monitor, the continuous emission monitoring system, and the flow monitoring system to ensure comparison of simultaneous measurements.

For each relative accuracy test audit run, compare the measurements obtained from the monitor or continuous emission monitoring system (in ppm, percent CO_2, lb/mmBtu, or other units) against the corresponding reference method values. Tabulate the paired

data in a table such as the one shown in Figure 2.

6.5.9 Number of Reference Method Tests

Perform a minimum of nine sets of paired monitor (or monitoring system) and reference method test data for every required (i.e., certification, semiannual, or annual) relative accuracy or bias test audit. For the certification and annual quality assurance relative accuracy test audits for flow monitors, perform a minimum of nine sets at each of the three operating levels specified in section 6.5.2 of this appendix. Conduct each set within a period of 30 to 60 minutes.

NOTE: The tester may choose to perform more than nine sets of reference method tests. If this option is chosen, the tester may reject a maximum of three sets of the test results as long as the total number of test results used to determine the relative accuracy or bias is greater than or equal to nine. Report all data, including the rejected data, and reference method test results.

6.5.10 Reference Methods

The following methods from appendix A to part 60 of this chapter or their approved alternatives are the reference methods for performing relative accuracy test audits: Method 1 or 1A for siting; Method 2 (or 2A, 2C, or 2D) for velocity; Methods 3, 3A, or 3B for O_2 or CO_2; Method 4 for moisture; Methods 6, 6A, or 6C for SO_2; Methods 7, 7A, 7C, 7D, 7E for NO_X, excluding the exception in section 5.1.2 of Method 7E. When using Method 7E for measuring NO_X concentration, total NO_X, both NO and NO_2, must be measured.

7. CALCULATIONS

7.1 Linearity Check

Analyze the linearity data for pollutant concentration and CO_2 or O_2 monitors as follows. Calculate the percentage error in linearity based upon the reference value at the low-level, mid-level, and high-level concentrations specified in section 6.2 of this appendix. Perform this calculation once during the certification test. Use the following equation to calculate the error in linearity for each reference value.

$$LE = \frac{|R-A|}{R} \times 100$$

(Eq. A–4)

where,

LE=Percentage Linearity error, based upon the reference value.

R=Reference value of Low-, mid-, or high-level calibration gas introduced into the monitoring system.

A=Average of the monitoring system responses.

7.2 Calibration Error

7.2.1 Pollutant Concentration and Diluent Monitors

For each reference value, calculate the percentage calibration error based upon instrument span for daily calibration error tests using the following equation:

$$CE = \frac{|R-A|}{S} \times 100$$

(Eq. A–5)

where,

CE=Percentage Calibration error based upon span of the instrument.

R=Reference value of zero- or high-level calibration gas introduced into the monitoring system.

A=Actual monitoring system response to the calibration gas.

S=Span of the instrument, as specified in Section 2 of this appendix.

7.2.2 Flow Monitor Calibration Error

For each reference value, calculate the percentage calibration error based upon span using the following equation:

$$CE = \frac{|R-A|}{S} \times 100 \qquad \text{(Eq. A–6)}$$

where:

CE=Calibration error;

R=Low or high level reference value specified in section 2.2.2.1 of this appendix;

A=Actual flow monitor response to the reference value; and

S=Flow monitor span or equivalent reference value (e.g., pressure pulse or electronic signal).

7.3 Relative Accuracy for SO_2 and CO_2 Pollutant Concentration Monitors, SO_2-Diluent Continuous Emission Monitoring Systems, and Flow Monitors

Analyze the relative accuracy test audit data from the reference method tests for SO_2 and CO_2 pollutant concentration monitors, SO_2-diluent continuous emission monitoring systems (lb/mmBtu) used by units with a qualifying Phase I technology for the period during which the units are required to monitor SO_2 emission removal efficiency, from January 1, 1997 through December 31, 1999, and flow monitors using the following procedures. Summarize the results on a data sheet. An example is shown in Figure 2. Calculate the mean of the monitor or monitoring system measurement values. Calculate the mean of the reference method values. Using data from the automated data acquisition and handling system, calculate the arithmetic differences between the reference method and monitor measurement data sets. Then calculate the arithmetic mean of the difference, the standard deviation, the confidence coefficient, and the monitor or monitoring system relative accuracy using the following procedures and equations.

7.3.1 Arithmetic Mean

Calculate the arithmetic mean of the differences, $\bar{d}$, of a data set as follows.

$$\bar{d} = \frac{1}{n} \sum_{i=1}^{n} d_i$$

(Eq. A–7)

where,

n=Number of data points.

$\sum_{i=1}^{n} d_i$=Algebraic sum of the individual differences d_i.

d_i=The difference between a reference method value and the corresponding continuous emission monitoring system value (RM_i–CEM_i) at a given point in time i.

When calculating the arithmetic mean of the difference of a flow monitor data set, be sure to correct the monitor measurements for moisture if applicable.

7.3.2 Standard Deviation

Calculate the standard deviation, S_d, of a data set as follows:

$$S_d = \sqrt{\frac{\sum_{i=1}^{n} d_i^2 - \left[\frac{\left(\sum_{i=1}^{n} d_i\right)^2}{n}\right]}{n-1}}$$

(Eq. A–8)

7.3.3 Confidence Coefficient

Calculate the confidence coefficient (one-tailed), cc, of a data set as follows.

$$cc = t_{0.025} \frac{S_d}{\sqrt{n}}$$

(eq. A–9)

where,

$t_{0.025}$=t value (see Table 7–1).

TABLE 7–1 T-VALUES

n-1	$t_{0.025}$	n-1	$t_{0.025}$	n-1	$t_{0.025}$
1	12.706	12	2.179	23	2.069
2	4.303	13	2.160	24	2.064
3	3.182	14	2.145	25	2.060
4	2.776	15	2.131	26	2.056
5	2.571	16	2.120	27	2.052
6	2.447	17	2.110	28	2.048
7	2.365	18	2.101	29	2.045
8	2.306	19	2.093	30	2.042
9	2.262	20	2.086	40	2.021
10	2.228	21	2.080	60	2.000
11	2.201	22	2.074	>60	1.960

7.3.4 Relative Accuracy

Calculate the relative accuracy of a data set using the following equation.

$$RA = \frac{|\bar{d}| + |cc|}{\overline{RM}} \times 100$$

(Eq. A–10)

where,

$\overline{RM}$=Arithmetic mean of the reference method values.

$|\bar{d}|$=The absolute value of the mean difference between the reference method values and the corresponding continuous emission monitoring system values.

|cc|=The absolute value of the confidence coefficient.

7.4 Relative Accuracy for NO_x Continuous Emission Monitoring Systems

Analyze the relative accuracy test audit data from the reference method tests for NO_x continuous emissions monitoring system as follows.

7.4.1 Data Preparation

If C_{NOx}, the NO_x concentration, is in ppm, multiply it by 1.194×10^{-7} (lb/dscf)/ppm to convert it to units of lb/dscf. If C_{NOx} is in mg/dscm, multiply it by 6.24×10^{-8} (lb/dscf)/(mg/dscm) to convert it to lb/dscf. Then, use the diluent (O_2 or CO_2) reference method results for the run and the appropriate F or F_c factor from Table 1 in Appendix F of this part to convert C_{NOx} from lb/dscf to lb/mmBtu units. Use the equations and procedure in section 3 of Appendix F to this part, as appropriate.

7.4.2 NO_x Emission Rate (Monitoring System)

For each test run in a data set, calculate the average NO_x emission rate (in lb/mmBtu), by means of the data acquisition and handling system, during the time period of the test run. Tabulate the results as shown in example Figure 4.

7.4.3 Relative Accuracy

Use the equations and procedures in section 7.3 above to calculate the relative accuracy for the NO_x continuous emission monitoring system. In using Equation A–7, ''d'' is, for each run, the difference between the NO_x emission rate values (in lb/mmBtu) obtained from the reference method data and the NO_x continuous emission monitoring system.

7.5 Relative Accuracy for Combined SO_2/Flow [Reserved]

7.6 Bias Test and Adjustment Factor

Test the relative accuracy test audit data sets for SO_2 pollutant concentration monitors, flow monitors, and NO_X continuous emission monitoring systems for bias using the procedures outlined below.

7.6.1 Arithmetic Mean

Calculate the arithmetic mean of the difference, $\bar{d}$, of the data set using Equation A–7 of this appendix. To calculate bias for an SO_2 pollutant concentration monitor, ''d'' is, for each paired data point, the difference between the SO_2 concentration value (in ppm) obtained from the reference method and the monitor. To calculate bias for a flow monitor, ''d'' is, for each paired data point, the difference between the flow rate values (in scfh) obtained from the reference method and the monitor. To calculate bias for a NO_X continuous emission monitoring system, ''d'' is, for each paired data point, the difference between the NO_X emission rate values (in lb/mmBtu) obtained from the reference method and the monitoring system.

7.6.2 Standard Deviation

Calculate the standard deviation, S_d, of the data set using Equation A–8.

7.6.3 Confidence Coefficient

Calculate the confidence coefficient, cc, of the data set using Equation A–9.

7.6.4 Bias Test

If the mean difference, $\bar{d}$, is greater than the absolute value of the confidence coefficient, |cc|, the monitor or monitoring system has failed to meet the bias test requirement. For flow monitor bias tests, if the mean difference, $\bar{d}$, is greater than |cc| at the operating level closest to normal operating level during the 3-level RATA, the monitor has failed to meet the bias test requirement. For flow monitors, apply the bias test at the operating level closest to normal operating level during the 3-level RATA.

7.6.5 Bias Adjustment

If the monitor or monitoring system fails to meet the bias test requirement, adjust the value obtained from the monitor using the following equation:

$$CEM_i^{Adjusted} = CEM_i^{Monitor} \times BAF \qquad \text{(Eq. A–11)}$$

Where:

$CEM_i^{Monitor}$=Data (measurement) provided by the monitor at time i.

$CEM_i^{Adjusted}$=Data value, adjusted for bias, at time i.

BAF=Bias adjustment factor, defined by

$$BAF = 1 + \frac{|\bar{d}|}{\overline{CEM}} \qquad \text{(Eq. A–12)}$$

Where:

BAF=Bias adjustment factor, calculated to the nearest thousandth.

d=Arithmetic mean of the difference obtained during the failed bias test using Equation A–7.

CEM=Mean of the data values provided by the monitor during the failed bias test.

If the bias test is failed by a flow monitor at the operating level closest to normal on a 3-level relative accuracy test audit, calculate the bias adjustment factor for each of the three operating levels. Apply the largest of the three bias adjustment factors to subsequent flow monitor data using Equation A–11.

Apply this adjustment prospectively to all monitor or monitoring system data from the date and time of the failed bias test until the date and time of a relative accuracy test audit that does not show bias. Use the adjusted values in computing substitution values in the missing data procedure, as specified in subpart D of this part, and in reporting the concentration of SO_2, the flow rate, and the average NO_X emission rate and calculated mass emissions of SO_2 and CO_2 during the quarter and calendar year, as specified in subpart G of this part.

Figures for Appendix A of Part 75

FIGURE 1.—LINEARITY ERROR DETERMINATION

Day	Date and time	Reference value	Monitor value	Difference	Percent of reference value
Low-level:					
Mid-level:					
High-level:					

FIGURE 2.—RELATIVE ACCURACY DETERMINATION (POLLUTANT CONCENTRATION MONITORS)

Run No.	Date and time	SO_2 (ppm[c])			Date and time	CO_2 (Pollutant) (ppm[c])		
		RM[a]	M[b]	Diff		RM[a]	M[b]	Diff
1								
2								
3								
4								
5								
6								
7								
8								
9								
10								
11								
12								
Arithmetic Mean Difference (Eq. A–7). Confidence Coefficient (Eq. A–9). Relative Accuracy (Eq. A–10).								

[a] RM means ''reference method data.''
[b] M means ''monitor data.''
[c] Make sure the RM and M data are on a consistent basis, either wet or dry.

FIGURE 3.—RELATIVE ACCURACY DETERMINATION (FLOW MONITORS)

Run No.	Date and time	Flow rate (Low) (scf/hr)*			Date and time	Flow rate (Normal) (scf/hr)*			Date and time	Flow rate (High) (scf/hr)*		
		RM	M	Diff		RM	M	Diff		RM	M	Diff
1												
2												
3												
4												
5												
6												
7												
8												
9												
10												
11												
12												
Arithmetic Mean Difference (Eq. A–7). Confidence Coefficient (Eq. A–9). Relative Accuracy (Eq. A–10).												

* Make sure the RM and M data are on a consistent basis, either wet or dry.

FIGURE 4.—RELATIVE ACCURACY DETERMINATION (NO_X/Diluent Combined System)

Run No.	Date and time	Reference method data		NO_X system (lb/mmBtu)		
		NO_X( )[a]	O_2/CO_2%	RM	M	Difference
1						
2						
3						
4						
5						
6						
7						
8						
9						
10						
11						
12						
Arithmetic Mean Difference (Eq. A–7). Confidence Coefficient (Eq. A–9). Relative Accuracy (Eq. A–10).						

[a] Specify units: ppm, lb/dscf, mg/dscm.

FIGURE 5—CYCLE TIME

Date of test _____
Component/system ID#: _____
Analyzer type _____
Serial Number _____
High level gas concentration: _____ ppm/% (circle one)
Zero level gas concentration: _____ ppm/% (circle one)
Analyzer span setting: _____ ppm/% (circle one)
Upscale:
Stable starting monitor value: _____ ppm/% (circle one)
Stable ending monitor reading: _____ ppm/% (circle one)
Elapsed time: _____ seconds
Downscale:
Stable starting monitor value: _____ ppm/% (circle one)
Stable ending monitor value: _____ ppm/% (circle one)
Elapsed time: _____ seconds
Component cycle time= _____ seconds
System cycle time= _____ seconds

[58 FR 3701, Jan. 11, 1993, as amended at 60 FR 26541–26546, 26569–26570, May 17, 1995; 61 FR 25582, May 22, 1996]

EFFECTIVE DATE NOTE: At 60 FR 26569, 26570, May 17, 1995, appendix A to part 75 was amended by temporarily adding sections 6.3.3, 6.3.4, 6.4.1 and Figure 5, and by temporarily suspending sections 6.3.1, 6.3.2, and 6.4, effective July 17, 1995 through December 31, 1996.

APPENDIX B TO PART 75—QUALITY ASSURANCE AND QUALITY CONTROL PROCEDURES

1. QUALITY CONTROL PROGRAM

Develop and implement a quality control program for the continuous emission monitoring systems and their components. As a minimum, include in each quality control program a written plan that describes in detail complete, step-by-step procedures and operations for each of the following activities.

1.1 Calibration Error Test and Linearity Check Procedures

Identify calibration error test and linearity check procedures specific to the continuous emission monitoring system that may require variance from the procedures in Appendix A to this part (e.g., how gases are to

be injected, adjustments of flow rates and pressures, introduction of reference values, length of time for injection of calibration gases, steps for obtaining calibration error or error in linearity, determination of interferences, and when calibration adjustments should be made).

1.2 Calibration and Linearity Adjustments

Explain how each component of the continuous emission monitoring system will be adjusted to provide correct responses to calibration gases, reference values, and/or indications of interference both initially and after repairs or corrective action. Identify equations, conversion factors, assumed moisture content, and other factors affecting calibration of each continuous emission monitoring system.

1.3 Preventive Maintenance

Keep a written record of procedures, including those specified by the manufacturers, needed to maintain the continuous emission monitoring system in proper operating condition and a schedule for those procedures. Include provisions for maintaining an inventory of spare parts.

1.4 Audit Procedures

Keep a written record of procedures and details peculiar to the installed continuous emission monitoring system that are to be used for relative accuracy test audits, such as sampling and analysis methods.

1.5 Recordkeeping and Reporting

Keep a written record describing procedures that will be used to implement the recordkeeping and reporting requirements in subparts F and G of this part.

2. FREQUENCY OF TESTING

A summary chart showing each quality assurance test and the frequency at which each test is required is located at the end of this appendix in Figure 1.

2.1 Daily Assessments

For each monitor or continuous emission monitoring system, perform the following assessments during each day in which the unit combusts any fuel (hereafter referred to as a ''unit operating day''), or for a monitor or continuous emission monitoring system on a bypass stack/duct, during each day that emissions pass through the by-pass stack or duct. These requirements are effective as of the date when the monitor or continuous emission monitoring system completes certification testing. The provisions in this section 2.1 are suspended from July 17, 1995 through December 31, 1996.

2.1.1 Calibration Error Test for Pollutant Concentration and CO_2 or O_2 Monitors

Test, record, and compute the calibration error of each SO_2 or NO_x pollutant concentration and CO_2 or O_2 monitor at least once on each unit operating day, or for monitors or monitoring systems on bypass ducts/stacks, on each day that emissions pass through the by-pass stack or duct. Conduct calibration error checks, to the extent practicable, approximately 24 hours apart. Perform the daily calibration error test according to the procedure in Appendix A, section 6.3.1 of this part.

For units with add-on emission controls and dual span or auto-ranging monitors, and other units that use maximum expected concentration value to determine calibration gas values, perform the daily calibration error test on each scale that has been used since the previous calibration error test. For example, if the emissions concentration has not exceeded the low-scale span value (based on the maximum expected concentration) since the calibration test during the previous calendar day, the calibration error test may be performed on the low-scale only. If, however, the emissions concentration has exceeded the low-scale span value for one hour or longer since the previous calibration error test, perform the calibration error on both the low- and high-scales.

2.1.2 Calibration Error Test for Flow Monitors

Test, compute, and record the calibration error of each flow monitor at least once on each unit operating day, or for monitors or monitoring systems on bypass ducts/stacks, on each day that emissions pass through the by-pass stack or duct. Introduce the reference values (specified in section 2.2.2.1 of Appendix A to this part) to the probe tip (or equivalent) or to the transducer. Record flow monitor output from the data acquisition and handling system before and after any adjustments to the flow monitor. Keep a record of all maintenance and adjustments. Calculate the calibration error using Equation A–6 in Appendix A of this part.

2.1.3 Interference Check

Perform the daily flow monitor interference checks specified in section 2.2.2.2 of Appendix A to this part at least once per operating day (when the unit(s) operate for any part of the day).

2.1.4 Recalibration

The EPA recommends adjusting the calibration, at a minimum, whenever the daily calibration error exceeds the limits of the applicable performance specification for the pollutant concentration monitor, CO_2, or O_2 monitor, or flow monitor in appendix A of this part.

2.1.5 Out-of-Control Period

An out-of-control period occurs when the calibration error of an SO_2 or NO_x pollutant concentration monitor exceeds 5.0 percent based upon the span value (or exceeds 10 ppm, for span values <200 ppm), when the calibration error of a diluent gas monitor exceeds 1.0 percent O_2 or CO_2, or when the calibration error of a flow monitor exceeds 6.0 percent based upon the span value, which is twice the applicable specification of Appendix A of this part. The out-of-control period begins with the hour of completion of the failed calibration error test and ends with the hour of completion following an effective recalibration. Whenever the failed calibration, corrective action, and effective recalibration occur within the same hour, the hour is not out of control if 2 or more valid readings are obtained during that hour as required by §75.10 of this part. A NO_x continuous emission monitoring system is considered out-of-control if either component monitor exceeds twice the applicable specification in Appendix A of this part.

An out-of-control period also occurs whenever interference of a flow monitor is identified. The out-of-control period begins with the hour of completion of the failed interference check and ends with the hour of completion of an interference check that is passed.

2.1.6 Data Recording

Record and tabulate all calibration error test data according to month, day, clock-hour, and magnitude in either ppm, percent volume, or scfh. Program monitors that automatically adjust data to the corrected calibration values (e.g., microprocessor control) to record either: (1) The unadjusted concentration or flow rate measured in the calibration error test prior to resetting the calibration, or (2) the magnitude of any adjustment. Record the following applicable flow monitor interference check data: (1) Sample line/sensing port pluggage, and (2) malfunction of each RTD, transceiver, or equivalent.

2.1.7 Daily Assessments

For each monitor or continuous emission monitoring system, perform the following assessments during each day in which the unit combusts any fuel (hereafter referred to as a ''unit operating day''), or for a monitor on a bypass stack/duct, during each day that emissions pass through the by-pass stack or duct. If the unit discontinues operation or if use of the by-pass stack or duct is discontinued prior to performance of the calibration error test, data from the monitor or continuous emission monitoring system may be considered quality assured prospectively for 24 consecutive clock hours from the time of successful completion of the previous daily test performed while the unit is operating. These requirements are effective as of the date when the monitor or continuous emission monitoring system completes certification testing.

2.2 Quarterly Assessments

For each monitor or continuous emission monitoring system, perform the following assessments during each unit operating quarter, or for monitors or monitoring systems on bypass ducts or bypass stacks, during each bypass operating quarter to be performed not less than once every 2 calendar years. This requirement is effective as of the calendar quarter following the calendar quarter in which the monitor or continuous emission monitoring system is provisionally certified.

2.2.1 Linearity Check

Perform a linearity check for each SO_2 and NO_X pollutant concentration monitor and each CO_2 or O_2 monitor at least once during each unit operating quarter or each bypass operating quarter, in accordance with the procedures in appendix A, section 6.2 of this part. For units using emission controls and other units using a low-scale span value to determine calibration gases, perform a linearity check on both the low- and high-scales. Conduct the linearity checks no less than 2 months apart, to the extent practicable.

2.2.2 Leak Check

For differential pressure flow monitors, perform a leak check of all sample lines (a manual check is acceptable) at least once during each unit operating quarter or each bypass operating quarter. Conduct the leak checks no less than 2 months apart, to the extent practicable.

2.2.3 Out-of-Control Period

An out-of-control period occurs when the error in linearity at any of the three concentrations (six for dual range monitors) in the quarterly linearity check exceeds the applicable specification in Appendix A, section 3.2 of this part. The out-of-control period begins with the hour of the failed linearity check and ends with the hour of a satisfactory linearity check following corrective action and/or monitor repair. For the NO_x continuous emission monitoring system, the system is considered out-of-control if either of the component monitors exceed the applicable specification in Appendix A, section 3.2 of this part. An out-of-control period occurs when a flow monitor sample line leak is detected. The out-of-control period begins with the hour of the failed leak check and ends with the hour of a satisfactory leak check following corrective action.

2.3 Semiannual and Annual Assessments

For each monitor or continuous emission monitoring system, perform the following assessments once semiannually (within two calendar quarters) or once annually (within four calendar quarters) after the calendar quarter in which the monitor or monitoring system was last tested, as specified below for the type of test and the performance achieved, except as provided below in section 2.3.1 of this appendix for monitors or continuous emission monitoring systems on bypass ducts or stacks or on peaking units. This requirement is effective as of the calendar quarter, unit operating quarter (for peaking units), or bypass operating quarter (for bypass stacks or ducts) following the calendar quarter in which the monitor or continuous emission monitoring system is provisionally certified. A summary chart showing the frequency with which a relative accuracy test audit must be performed, depending on the accuracy achieved, is located at the end of this appendix in Figure 2.

2.3.1 Relative Accuracy Test Audit

Perform relative accuracy test audits semiannually and, to the extent practicable, no less than 4 months apart for each SO_2 or CO_2 pollutant concentration monitor, flow monitor, NO_X continuous emission monitoring system, or SO_2-diluent continuous emission monitoring systems used by units with a Phase I qualifying technology for the period during which the units are required to monitor SO_2 emission removal efficiency, from January 1, 1997 through December 31, 1999, except as provided for monitors or continuous emission monitoring systems on peaking units or bypass stacks or ducts. For monitors on bypass stacks/ducts, perform relative accuracy test audits no less than once every two successive bypass operating quarters, or once every two calendar years, whichever occurs first, in accordance with the procedures in section 6.5 of Appendix A of this part. For monitors on peaking units, perform relative accuracy test audits no less than once every two successive unit operating quarters, or once every two calendar years, whichever occurs first. Audits required under this section shall be performed no less than 4 months apart, to the extent practicable. The audit frequency may be reduced, as specified below for monitors or monitoring systems which qualify for less frequent testing.

For flow monitors, one-level and three-level relative accuracy test audits shall be performed alternately (when a flow RATA is conducted semiannually), such that the three-level relative accuracy test audit is performed at least once annually. The three-level audit shall be performed at the three different operating or load levels specified in appendix A, section 6.5.2 of this part, and the one-level audit shall be performed at the normal operating or load level. Notwithstanding that requirement, relative accuracy test audits need only be performed at the normal operating or load level for monitors and continuous emission monitoring systems on peaking units and bypass stacks/ducts.

Relative accuracy test audits may be performed on an annual basis rather than on a semiannual basis (or for monitors on peaking units and bypass ducts or bypass stacks, no less than (1) once every four successive unit or bypass operating quarters, or (2) every two calendar years, whichever occurs first) under any of the following conditions: (1) The relative accuracy during the previous audit for an SO_2 or CO_2 pollutant concentration monitor (including an O_2 pollutant monitor used to measure CO_2 using the procedures in appendix F of this part), or for a NO_X or SO_2-diluent continuous emissions monitoring system is 7.5 percent or less; (2) prior to January 1, 2000, the relative accuracy during the previous audit for a flow monitor is 10.0 percent or less at each operating level tested; (3) on and after January 1, 2000, the relative accuracy during the previous audit for a flow monitor is 7.5 percent or less at each operating level tested; (4) on low flow (≤10.0 fps) stacks/ducts, when the monitor mean, calculated using Equation A–7 in appendix A of this part is within ±1.5 fps of the reference method mean or achieves a relative accuracy of 7.5 percent (10 percent if prior to January 1, 2000) or less during the previous audit; (5) on low SO_2 emitting units (SO_2 concentrations ≤250.0 ppm, or equivalent lb/mmBtu value for SO_2-diluent continuous emission monitoring systems), when the monitor mean is within ±8.0 ppm (or equivalent in lb/mmBtu for SO_2-diluent continuous emission monitoring systems) of the reference method mean or achieves a relative accuracy of 7.5 percent or less during the previous audit; or (6) on low NO_X emitting units (NO_X emission rate ≤0.20 lb/mmBtu), when the NO_X continuous emission monitoring system achieves a relative accuracy of 7.5 percent or less or when the monitoring system mean, calculated using Equation A–7 in appendix A of this part is within ±0.01 lb/mmBtu of the reference method mean.

A maximum of two relative accuracy test audit trials may be performed for the purpose of achieving the results required to qualify for less frequent relative accuracy test audits. Whenever two trials are performed, the results of the second (later) trial must be used in calculating both the relative accuracy and bias.

2.3.2 Out-of-Control Period

An out-of-control period occurs under any of the following conditions: (1) The relative accuracy of an SO_2, CO_2, or O_2 pollutant concentration monitor or a NO_X or SO_2-diluent

continuous emission monitoring system exceeds 10.0 percent; (2) prior to January 1, 2000, the relative accuracy of a flow monitor exceeds 15.0 percent; (3) on and after January 1, 2000, the relative accuracy of a flow monitor exceeds 10.0 percent; (4) for low flow situations (≤10.0 fps), the flow monitor mean value (if applicable) exceeds ±2.0 fps of the reference method mean whenever the relative accuracy is greater than 15.0 percent for Phase I or 10 percent for Phase II; (5) for low SO_2 emitter situations, the monitor mean values exceeds ±15.0 ppm (or ± 0.03 lb/mmBtu for SO_2-diluent continuous emission monitoring systems from January 1, 1997 through December 31, 1999) of the reference method mean whenever the relative accuracy is greater than 10.0 percent; or (6) for low NO_X emitting units (NO_X emission rate ≤0.2 lb/mmBtu), the NO_X continuous emission monitoring system mean values exceed ±0.02 lb/mmBtu of the reference method mean whenever the relative accuracy is greater than 10.0 percent. For SO_2, CO_2, O_2, NO_X emission rate, and flow relative accuracy test audits performed at only one level, the out-of-control period begins with the hour of completion of the failed relative accuracy test audit and ends with the hour of completion of a satisfactory relative accuracy test audit. For a flow relative accuracy test audit at 3 operating levels, the out-of-control period begins with the hour of completion of the first failed relative accuracy test audit at any of the three operating levels, and ends with the hour of completion of a satisfactory three-level relative accuracy test audit.

Failure of the bias test does not result in the system or monitor being out-of-control.

2.3.3 Bias Adjustment Factor

2.3.3 Bias Adjustment Factor. If an SO_2 pollutant concentration monitor, flow monitor, or NO_x continuous emission monitoring system fails the bias test specified in Section 7.6 of Appendix A of this part, use the bias adjustment factor given in Equations A–11 and A–12 of Appendix A of this part to adjust the monitored data.

2.4 Other Audits

Affected units may be subject to relative accuracy test audits at any time. If a monitor or continuous emission monitoring system fails the relative accuracy test during the audit, the monitor or continuous emission monitoring system shall be considered to be out-of-control beginning with the date and time of completion of the audit, and continuing until a successful audit test is completed following corrective action. If a monitor or monitoring system fails the bias test during an audit, use the bias adjustment factor given by Equations A–11 and A–12 in Appendix A to this part to adjust the monitored data. Apply this adjustment factor from the date and time of completion of the audit until the date and time of completion of a relative accuracy test audit that does not show bias.

FIGURE 1.—QUALITY ASSURANCE TEST REQUIREMENTS

Test	QA test frequency requirements		
	Daily*	Quarterly*	Semiannual*
Calibration Error (2 pt.).	√		
Interference (flow).	√		
Leak (flow)		√	
Linearity (3 pt.)		√	
RATA (SO_2, NO_x, CO_2)[1].			√
RATA (flow, alternating 1-load and 3-load)[2].			√

*For monitors on bypass stack/duct, bypass operating days or quarters, only.
[1] Conduct annually, if monitor meets accuracy requirements to qualify for less frequent testing.
[2] Conduct 3-load RATAs annually, if requirements to qualify for less frequent testing are met.

FIGURE 2.—RELATIVE ACCURACY TEST FREQUENCY INCENTIVE SYSTEM

RATA	Semiannually[1] (percent)	Annual[1]
SO_2	RA ≤ 10	RA ≤ 7.5% or ±8.0 ppm.[2]
NO_X	RA ≤ 10	RA ≤ 7.5% or ±0.01 lb/mmBtu.[2]
Flow (Phase I)[3]	RA ≤ 15	RA ≤ 10% or ± 1.5 fps.[2]
Flow (Phase II)[3]	RA ≤ 10	RA ≤ 7.5% or ± 1.5 fps.[2]
CO_2/O_2	RA ≤ 10	RA ≤ 7.5%.

[1] For monitors on bypass stack/duct, bypass operating quarters, not to exceed two calendar years. For monitors on peaking units, unit operating quarters, not to exceed two calendar years.
[2] The difference between monitor and reference method mean values; low emitters or low flow, only.
[3] Conduct 3-load RATAs annually, if requirements to qualify for less frequent testing are met.

[58 FR 3701, Jan. 11, 1993, as amended at 60 FR 26546, 26571, May 17, 1995]

EFFECTIVE DATE NOTE: At 60 FR 26571, May 17, 1995, appendix B to part 75 was amended by temporarily suspending section 2.1 and

temporarily adding section 2.1.7, effective July 17, 1995 through December 31, 1996.

APPENDIX C TO PART 75—MISSING DATA ESTIMATION PROCEDURES

1. PARAMETRIC MONITORING PROCEDURE FOR MISSING SO_2 Concentration or NO_X EMISSION RATE DATA

1.1 Applicability

The owner or operator of any affected unit equipped with post-combustion SO_2 or NO_x emission controls and SO_2 pollutant concentration monitors and/or NO_x continuous emission monitoring systems at the inlet and outlet of the emission control system may apply to the Administrator for approval and certification of a parametric, empirical, or process simulation method or model for calculating substitute data for missing data periods. Such methods may be used to parametrically estimate the removal efficiency of the SO_2 of postcombustion NO_x emission controls which, with the monitored inlet concentration or emission rate data, may be used to estimate the average concentration of SO_2 emissions or average emission rate of NO_x discharged to the atmosphere. After approval by the Administrator, such method or model may be used for filling in missing SO_2 concentration or NO_x emission rate data when data from the outlet SO_2 pollutant concentration monitor or outlet NO_x continuous emission monitoring system have been reported with an annual monitor data availability of 90.0 percent or more.

Base the empirical and process simulation methods or models on the fundamental chemistry and engineering principles involved in the treatment of pollutant gas. On a case-by-case basis, the Administrator may pre-certify commercially available process simulation methods and models.

1.2 Petition Requirements

Continuously monitor, determine, and record hourly averages of the estimated SO_2 or NO_X removal efficiency and of the parameters specified below, at a minimum. The affected facility shall supply additional parametric information where appropriate. Measure the SO_2 concentration or NO_X emission rate, removal efficiency of the add-on emission controls, and the parameters for at least 2160 unit operating hours. Provide information for all expected operating conditions and removal efficiencies. At least 4 evenly spaced data points are required for a valid hourly average, except during periods of calibration, maintenance, or quality assurance activities, during which 2 data points per hour are sufficient. The Administrator will review all applications on a case-by-case basis.

1.2.1 Parameters for Wet Flue Gas Desulfurization System

1.2.1.1 Number of scrubber modules in operation.

1.2.1.2 Total slurry rate to each scrubber module (gal per min).

1.2.1.3 In-line absorber pH of each scrubber module.

1.2.1.4 Pressure differential across each scrubber module (inches of water column).

1.2.1.5 Unit load (MWe).

1.2.1.6 Inlet and outlet SO_2 concentration as determined by the monitor or missing data substitution procedures.

1.2.1.7 Percent solids in slurry for each scrubber module.

1.2.1.8 Any other parameters necessary to verify scrubber removal efficiency, if the Administrator determines the parameters above are not sufficient.

1.2.2 Parameters for Dry Flue Gas Desulfurization System

1.2.2.1 Number of scrubber modules in operation.

1.2.2.2 Atomizer slurry flow rate to each scrubber module (gal per min).

1.2.2.3 Inlet and outlet temperature for each scrubber module (°F).

1.2.2.4 Pressure differential across each scrubber module (inches of water column).

1.2.2.5 Unit load (MWe).

1.2.2.6 Inlet and outlet SO_2 concentration as determined by the monitor or missing data substitution procedures.

1.2.2.7 Any other parameters necessary to verify scrubber removal efficiency, if the Administrator determines the parameters above are not sufficient.

1.2.3 Parameters for Other Flue Gas Desulfurization Systems

If SO_2 control technologies other than wet or dry lime or limestone scrubbing are selected for flue gas desulfurization, a corresponding empirical correlation or process simulation parametric method using appropriate parameters may be developed by the owner or operator of the affected unit, and then reviewed and approved or modified by the Administrator on a case-by-case basis.

1.2.4 Parameters for Post-Combustion NO_x Emission Controls

1.2.4.1 Inlet air flow rate to the unit (boiler) (mcf/hr).

1.2.4.2 Excess oxygen concentration of flue gas at stack outlet (percent).

1.2.4.3 Carbon monoxide concentration of flue gas at stack outlet (ppm).

1.2.4.4 Temperature of flue gas at outlet of the unit (°F).

1.2.4.5 Inlet and outlet NO_x emission rate as determined by the NO_x continuous emission monitoring system or missing data substitution procedures.

1.2.4.6 Any other parameters specific to the emission reduction process necessary to verify the NO_x control removal efficiency, (e.g., reagent feedrate in gal/mi).

1.3 Correlation of Emissions With Parameters

Establish a method for correlating hourly averages of the parameters identified above with the percent removal efficiency of the SO_2 or post-combustion NO_X emission controls under varying unit operating loads. Equations 1–7 in §75.15 may be used to estimate the percent removal efficiency of the SO_2 emission controls on an hourly basis.

Each parametric data substitution procedure should develop a data correlation procedure to verify the performance of the SO_2 emission controls or post-combustion NO_x emission controls, along with the SO_2 pollutant concentration monitor and NO_x continuous emission monitoring system values for varying unit load ranges.

For NO_x emission rate data, and wherever the performance of the emission controls varies with the load, use the load range procedure provided in section 2.2 of this appendix.

1.4 Calculations

1.4.1 Use the following equation to calculate substitute data for filling in missing (outlet) SO_2 pollutant concentration monitor data.

$M_o = I_c (1–E)$

(Eq. C–1)

where,

M_o = Substitute data for outlet SO_2 concentration, ppm.

I_c = Recorded inlet SO_2 concentration, ppm.

E = Removal efficiency of SO_2 emission controls as determined by the correlation procedure described in section 1.3 of this appendix.

1.4.2 Use the following equation to calculate substitute data for filling in missing (outlet) NO_x emission rate data.

$M_o = I_c (1–E)$

(Eq. C–2)

where,

M_o = Substitute data for outlet NO_x emission rate, lb/mmBtu.

I_c = Recorded inlet NO_x emission rate, lb/mmBtu.

E = Removal efficiency of post-combustion NO_x emission controls determined by the correlation procedure described in section 1.3 of this appendix.

1.5 Missing Data

1.5.1 If both the inlet and the outlet SO_2 pollutant concentration monitors are unavailable simultaneously, use the maximum inlet SO_2 concentration recorded by the inlet SO_2 pollutant concentration monitor during the previous 720 quality assured monitor operating hours to substitute for the inlet SO_2 concentration in Equation C–1 of this appendix.

1.5.2 If both the inlet and outlet NO_x continuous emission monitoring systems are unavailable simultaneously, use the maximum inlet NO_x emission rate for the corresponding unit load recorded by the NO_x continuous emission monitoring system at the inlet during the previous 2160 quality assured monitor operating hours to substitute for the inlet NO_x emission rate in Equation C–2 of this Appendix.

1.6 Application

Apply to the Administrator for approval and certification of the parametric substitution procedure for filling in missing SO_2 concentration or NO_x emission rate data using the established criteria and information identified above. DO not use this procedure until approved by the Administrator.

2. LOAD-BASED PROCEDURE FOR MISSING FLOW RATE AND NO_x EMISSION RATE DATA

2.1 Applicability

This procedure is applicable for data from all affected units for use in accordance with the provisions of this part to provide substitute data for volumetric flow (scfh) and NO_x emission rate (in lb/mmBtu).

2.2 Procedure

2.2.1 For a single unit, establish 10 operating load ranges defined in terms of percent of the maximum hourly gross load of the unit, in gross megawatts (MWge), as shown in Table C–1. For units sharing a common stack monitored with a single flow monitor, the load ranges for flow (but not for NO_X) may be broken down into 20 equally-sized operating load ranges in increments of 5 percent of the combined maximum hourly gross load of all units utilizing the common stack. For a cogenerating unit or other unit at which some portion of the heat input is not used to produce electricity or for a unit for which hourly gross load in MWge is not recorded separately, use the hourly gross steam load of the unit, in pounds of steam per hour at the measured temperature (°F) and pressure (psia) instead of MWge. Indicate a change in the number of load ranges or the units of loads to be used in the precertification section of the monitoring plan.

TABLE C–1.—DEFINITION OF OPERATING LOAD RANGES FOR LOAD-BASED SUBSTITUTION DATA PROCEDURES

Operating load range	Percent of maximum hourly gross load (%)
1	0–10

TABLE C–1.—DEFINITION OF OPERATING LOAD RANGES FOR LOAD-BASED SUBSTITUTION DATA PROCEDURES—Continued

Operating load range	Percent of maximum hourly gross load (%)
2	10–20
3	20–30
4	30–40
5	40–50
6	50–60
7	60–70
8	70–80
9	80–90
10	90–100

2.2.2 Beginning with the first hour of unit operation after installation and certification of the flow monitor or the NO_x continuous emission monitoring system, for each hour of unit operation record a number, 1 through 10 (or 1 through 20 for flow at common stacks), that identifies the operating load range corresponding to the integrated hourly gross load of the unit(s) recorded for each unit operating hour.

2.2.3 Beginning with the first hour of unit operation after installation and certification of the flow monitor or the NO_X continuous emission monitoring system and continuing thereafter, the data acquisition and handling system must be capable of calculating and recording the following information for each unit operating hour of missing flow or NO_X data within each identified load range during the shorter of: (1) the previous 2,160 quality assured monitor operating hours (on a rolling basis), or (2) all previous quality assured monitor operating hours.

2.2.3.1 Average of the hourly flow rates reported by a flow monitor, in scfh.

2.2.3.2 The 90th percentile value of hourly flow rates, in scfh.

2.2.3.3 The 95th percentile value of hourly flow rates, in scfh.

2.2.3.4 The maximum value of hourly flow rates, in scfh.

2.2.3.5 Average of the hourly NO_X emission rate, in lb/mmBtu, reported by a NO_X continuous emission monitoring system.

2.2.3.6 The 90th percentile value of hourly NO_x emission rates, in lb/mmBtu.

2.2.3.7 The 95th percentile value of hourly NO_x emission rates, in lb/mmBtu.

2.2.3.8 The maximum value of hourly NO_x emission rates, in lb/mmBtu.

2.2.4 Calculate all monitor or continuous emission monitoring system data averages, maximum values, and percentile values determined by this procedure using bias adjusted values in the load ranges.

2.2.5 When a bias adjustment is necessary for the flow monitor and/or the NO_X continuous emission monitoring system, apply the adjustment factor to all monitor or continuous emission monitoring system data values placed in the load ranges.

2.2.6 Use the calculated monitor or monitoring system data averages, maximum values, and percentile values to substitute for missing flow rate and NO_x emission rate data according to the procedures in subpart D of this part.

[58 FR 3701, Jan. 11, 1993, as amended at 60 FR 26547, 26548, May 17, 1995]

APPENDIX D TO PART 75—OPTIONAL SO_2 EMISSIONS DATA PROTOCOL FOR GAS-FIRED AND OIL-FIRED UNITS

1. APPLICABILITY

1.1 This protocol may be used in lieu of continuous SO_2 pollutant concentration and flow monitors for the purpose of determining hourly SO_2 emissions and heat input from: (1) gas-fired units as defined in §72.2 of this chapter; or (2) oil-fired units as defined in §72.2 of this chapter. This optional SO_2 emissions data protocol contains procedures for conducting oil sampling and analysis in section 2.2 of this appendix; the procedures for flow proportional oil sampling and the procedures for manual daily oil sampling may be used for any gas-fired unit or oil-fired unit. In addition, this optional SO_2 emissions data protocol contains two procedures for determining SO_2 emissions due to the combustion of gaseous fuels; these two procedures may be used for any gas-fired unit or oil-fired unit.

1.2 Pursuant to the procedures in §75.20, complete all testing requirements to certify use of this protocol in lieu of a flow monitor and an SO_2 continuous emission monitoring system. Complete all testing requirements no later than the applicable deadline specified in §75.4. Apply to the Administrator for initial certification to use this protocol no later than 45 days after the completion of all certification tests. Whenever the monitoring method is to be changed, reapply to the Administrator for recertification of the new monitoring method.

2. PROCEDURE

2.1 Flowmeter Measurements

For each hour when the unit is combusting fuel, measure and record the flow of fuel combusted by the unit, except as provided for gas in section 2.1.4 of this appendix. Measure the flow of fuel with an in-line fuel flowmeter and automatically record the data with a data acquisition and handling system, except as provided in section 2.1.4 of this appendix.

2.1.1 Measure the flow of each fuel entering and being combusted by the unit. If a portion of the flow is diverted from the unit without being burned, and that diversion occurs downstream of the fuel flowmeter, an

additional in-line fuel flowmeter is required to account for the unburned fuel. Record the flow of each fuel combusted by the unit as the difference between the flow measured in the pipe leading to the unit and the flow in the pipe diverting fuel away from the unit.

2.1.2 Install and use fuel flowmeters meeting the requirements of this appendix in a pipe going to each unit, or install and use a fuel flowmeter in a common pipe header (i.e., a pipe carrying fuel for multiple units). If the flowmeter is installed in a common pipe header, do one of the following:

2.1.2.1 Measure the fuel flow in the common pipe and combine SO_2 mass emissions for the affected units for recordkeeping and compliance purposes; or

2.1.2.2 Provide information satisfactory to the Administrator on methods for apportioning SO_2 mass emissions and heat input to each of the affected units demonstrating that the method ensures complete and accurate accounting of all emissions regulated under this part. The information shall be provided to the Administrator through a petition submitted by the designated representative under §75.66. Satisfactory information includes apportionment using fuel flow measurements, the ratio of load (in MWe) in each unit to the total load for all units receiving fuel from the common pipe header, or the ratio of steam flow (in 1000 lb/hr) at each unit to the total steam flow for all units receiving fuel from the common pipe header.

2.1.3 For a gas-fired unit or an oil-fired unit that continuously or frequently combusts a supplemental fuel for flame stabilization or safety purposes, measure the flow of the supplemental fuel with a fuel flowmeter meeting the requirements of this appendix.

2.1.4 For an oil-fired unit that uses gas solely for start-up or burner ignition or a gas-fired unit that uses oil solely for start-up or burner ignition a flowmeter for the start-up fuel is not required. Estimate the volume of oil combusted for each start-up or ignition, either by using a fuel flowmeter or by using the dimensions of the storage container and measuring the depth of the fuel in the storage container before and after each start-up or ignition. A fuel flowmeter used solely for start-up or ignition fuel is not subject to the calibration requirements of section 2.1.5 and 2.1.6 of this appendix. Gas combusted solely for start-up or burner ignition does not need to be measured separately.

2.1.5 Each fuel flowmeter used to meet the requirements of this protocol shall meet a flowmeter accuracy of ±2.0 percent of the upper range value (i.e, maximum calibrated fuel flow rate), either by design or as calibrated and as measured under laboratory conditions by the manufacturer, by an independent laboratory, or by the owner or operator. The flowmeter accuracy must include all error from all parts of the fuel flowmeter being calibrated based upon the contribution to the error in the flowrate.

2.1.5.1 Use the procedures in the following standards for flowmeter calibration or flowmeter design, as appropriate to the type of flowmeter: ASME MFC–3M–1989 with September 1990 Errata (''Measurement of Fluid Flow in Pipes Using Orifice, Nozzle, and Venturi''), ASME MFC–4M–1986 (Reaffirmed 1990), ''Measurement of Gas Flow by Turbine Meters,'' American Gas Association Report No. 3, ''Orifice Metering of Natural Gas and Other Related Hydrocarbon Fluids Part 1: General Equations and Uncertainty Guidelines'' (October 1990 Edition), Part 2: ''Specification and Installation Requirements'' (February 1991 Edition) and Part 3: ''Natural Gas Applications'' (August 1992 edition), (excluding the modified flow-calculation method in Part 3) ASME MFC–5M–1985 (''Measurement of Liquid Flow in Closed Conduits Using Transit-Time Ultrasonic Flowmeters''), ASME MFC–6M–1987 with June 1987 Errata (''Measurement of Fluid Flow in Pipes Using Vortex Flow Meters''), ASME MFC–7M–1987 (Reaffirmed 1992), ''Measurement of Gas Flow by Means of Critical Flow Venturi Nozzles,'' ISO 8316: 1987(E) ''Measurement of Liquid Flow in Closed Conduits—Method by Collection of the Liquid in a Volumetric Tank,'' or MFC–9M–1988 with December 1989 Errata (''Measurement of Liquid Flow in Closed Conduits by Weighing Method'') for all other flow meter types (incorporated by reference under §75.6 of this part). The Administrator may also approve other procedures that use equipment traceable to National Institute of Standards and Technology (NIST) standards. Document other procedures, the equipment used, and the accuracy of the procedures in the monitoring plan for the unit and a petition submitted by the designated representative under §75.66(c). If the flowmeter accuracy exceeds ±2.0 percent of the upper range value, the flowmeter does not qualify for use under this part.

2.1.5.2 Alternatively, a fuel flowmeter used for the purposes of this part may be calibrated or recalibrated at least annually (or, for fuel flowmeters measuring emergency fuel, backup fuel or fuel usage of peaking units, every four calendar quarters when the unit combusts the fuel measured by the fuel flowmeter) by comparing the measured flow of a flowmeter to the measured flow from another flowmeter which has been calibrated or recalibrated during the previous 365 days using a standard listed in section 2.1.5 of this appendix or other procedure approved by the Administrator under §75.66. Any secondary elements, such as pressure and temperature transmitters, must be calibrated immediately prior to the comparison. Perform the comparison over a period of no more than seven consecutive unit operating days. Compare the average of three fuel flow

readings for each meter at each of three different flow levels, corresponding to (1) normal full operating load, (2) normal minimum operating load, and (3) a load point approximately equally spaced between the full and minimum operating loads. Calculate the flowmeter accuracy at each of the three flow levels using the following equation:

$$ACC = \frac{|R-A|}{URV} \times 100 \qquad \text{(Eq. D–1)}$$

Where:

ACC=Flow meter accuracy as a percentage of the upper range value, including all error from all parts of both flowmeters.

R=Average of the three flow measurements of the reference flow meter.

A=Average of the three measurements of the flow meter being tested.

URV=Upper range value of fuel flow meter being tested (i.e. maximum measurable flow).

If the flow meter accuracy exceeds ±2.0 percent of the upper range value at any of the three flow levels, either recalibrate the flow meter until the accuracy is within the performance specification, or replace the flow meter with another one that is within the performance specification. Notwithstanding the requirement for annual calibration of the reference flowmeter, if a reference flowmeter and the flowmeter being tested are within ±1.0 percent of the flowrate of each other during all in-place calibrations in a calendar year, then the reference flowmeter does not need to be calibrated before the next in-place calibration. This exception to calibration requirements for the reference flowmeter may be extended for periods up to five calendar years.

2.1.6 Quality Assurance

2.1.6.1 Recalibrate each fuel flowmeter to a flowmeter accuracy of ±2.0 percent of the upper range value prior to use under this part at least annually (or, for fuel flowmeters measuring emergency fuel, backup fuel or fuel usage of peaking units, every four calendar quarters when the unit combusts the fuel measured by the fuel flowmeter), or more frequently if required by manufacturer specifications. Perform the recalibration using the procedures in section 2.1.5 of this appendix. For orifice-, nozzle-, and venturi-type flowmeters, also recalibrate the flowmeter the following calendar quarter using the procedures in section 2.1.6.2 of this appendix, whenever the fuel flowmeter accuracy during a calibration or test is greater than ±1.0 percent of the upper range value, or whenever a visual inspection of the orifice, nozzle, or venturi identifies corrosion since the previous visual inspection.

2.1.6.2 For orifice-, nozzle-, and venturi-type flowmeters that are designed according to the standards in section 2.1.5 of this appendix, satisfy the calibration requirements of this appendix by calibrating the differential pressure transmitter or transducer, static pressure transmitter or transducer, and temperature transmitter or transducer, as applicable, using equipment that has a current certificate of traceability to NIST standards. In addition, conduct a visual inspection of the orifice, nozzle, or venturi at least annually.

2.2 Oil Sampling and Analysis

Perform sampling and analysis of as-fired oil to determine the percentage of sulfur by weight in the oil.

2.2.1 When combusting diesel fuel, sample the diesel fuel either (1) every day the unit combusts diesel fuel, or (2) upon receipt of a shipment of diesel fuel.

2.2.1.1 If the diesel fuel is sampled every day, use either the flow proportional method described in section 2.2.3 of this appendix or the daily manual method described in section 2.2.4 of this appendix.

2.2.1.2 If the diesel fuel is sampled upon delivery, calculate SO_2 emissions using the highest sulfur content of any oil supply combusted in the previous 30 days that the unit combusted oil. Diesel fuel sampling and analysis may be performed either by the owner or operator of an affected unit, an outside laboratory, or a fuel supplier, provided that sampling is performed according to ASTM D4057–88, ''Standard Practice for Manual Sampling of Petroleum and Petroleum Products'' (incorporated by reference under §75.6 of this part).

2.2.2 Perform oil sampling every day the unit is combusting oil except as provided for diesel fuel. Use either the flow proportional method described in section 2.2.3 of this appendix or the daily manual method described in section 2.2.4 of this appendix.

2.2.3 Conduct flow proportional oil sampling or continuous drip oil sampling in accordance with ASTM D4177–82 (Reapproved 1990), ''Standard Practice for Automatic Sampling of Petroleum and Petroleum Products'' (incorporated by reference under §75.6), every day the unit is combusting oil. Extract oil at least once every hour and blend into a daily composite sample. The sample composite period may not exceed 24 hr.

2.2.4 Representative as-fired oil samples may be taken manually every day that the unit combusts oil according to ASTM D4057–88, ''Standard Practice for Manual Sampling of Petroleum and Petroleum Products'' (incorporated by reference under §75.6), provided that the highest fuel sulfur content recorded at that unit from the most recent 30 daily samples is used for the purposes of calculating SO_2 emissions under section 3 of

this appendix. Use the gross calorific value measured from that day's sample to calculate heat input. If oil supplies with different sulfur contents are combusted on the same day, sample the highest sulfur fuel combusted that day.

NOTE: For units with pressurized fuel flow lines such as some diesel and dual-fuel reciprocating internal combustion engine units, a manual sample may be taken from the point closest to the unit where it is safe to take a sample (including back to the oil tank), rather than just prior to entry to the boiler or combustion chamber. As-delivered manual samples of diesel fuel need not be as-fired.

2.2.5 Split and label each oil sample. Maintain a portion (at least 200 cc) of each sample throughout the calendar year and in all cases for not less than 90 calendar days after the end of the calendar year allowance accounting period. Analyze oil samples for percent sulfur content by weight in accordance with ASTM D129–91, ''Standard Test Method for Sulfur in Petroleum Products (General Bomb Method),'' ASTM D1552–90, ''Standard Test Method for Sulfur in Petroleum Products (High Temperature Method),'' ASTM D2622–92, ''Standard Test Method for Sulfur in Petroleum Products by X-Ray Spectrometry,'' or ASTM D4294–90, ''Standard Test Method for Sulfur in Petroleum Products by Energy-Dispersive X-Ray Fluorescence Spectroscopy'' (incorporated by reference under §75.6).

2.2.6 Where the flowmeter records volumetric flow rather than mass flow, analyze oil samples to determine the density or specific gravity of the oil. Determine the density or specific gravity of the oil sample in accordance with ASTM D287–82 (Reapproved 1991), ''Standard Test Method for API Gravity of Crude Petroleum and Petroleum Products (Hydrometer Method),'' ASTM D941–88, ''Standard Test Method for Density and Relative Density (Specific Gravity) of Liquids by Lipkin Bicapillary Pycnometer,'' ASTM D1217–91, ''Standard Test Method for Density and Relative Density (Specific Gravity) of Liquids by Bingham Pycnometer,'' ASTM D1481–91, ''Standard Test Method for Density and Relative Density (Specific Gravity) of Viscous Materials by Lipkin Bicapillary,'' ASTM D1480–91, ''Standard Test Method for Density and Relative Density (Specific Gravity) of Viscous Materials by Bingham Pycnometer,'' ASTM D1298–85 (Reapproved 1990), ''Standard Practice for Density, Relative Density (Specific Gravity) or API Gravity of Crude Petroleum and Liquid Petroleum Products by Hydrometer Method,'' or ASTM D4052–91, ''Standard Test Method for Density and Relative Density of Liquids by Digital Density Meter'' (incorporated by reference under §75.6).

2.2.7 Analyze oil samples to determine the heat content of the fuel. Determine oil heat content in accordance with ASTM D240–87 (Reapproved 1991), ''Standard Test Method for Heat of Combustion of Liquid Hydrocarbon Fuels by Bomb Calorimeter,'' ASTM D2382–88, ''Standard Test Method for Heat or Combustion of Hydrocarbon Fuels by Bomb Calorimeter (High-Precision Method)'', or ASTM D2015–91, ''Standard Test Method for Gross Calorific Value of Coal and Coke by the Adiabatic Bomb Calorimeter'' (incorporated by reference under §75.6) or any other procedures listed in section 5.5 of appendix F of this part.

2.2.8 Results from the oil sample analysis must be available no later than thirty calendar days after the sample is composited or taken. However, during an audit, the Administrator may require that the results of the analysis be available within 5 business days, or sooner if practicable.

2.3 SO_2 Emissions from Combustion of Gaseous Fuels

Account for the hourly SO_2 mass emissions due to combustion of gaseous fuels for each day when gaseous fuels are combusted by the unit using the procedures in either section 2.3.1 or 2.3.2.

2.3.1 Sample the gaseous fuel daily.

2.3.1.1 Analyze the sulfur content of the gaseous fuel in grain/100 scf using ASTM D1072–90, ''Standard Test Method for Total Sulfur in Fuel Gases'', ASTM D4468–85 (Reapproved 1989) ''Standard Test Method for Total Sulfur in Gaseous Fuels by Hydrogenolysis and Rateometric Colorimetry,'' ASTM D5504–94 ''Standard Test Method for Determination of Sulfur Compounds in Natural Gas and Gaseous Fuels by Gas Chromatography and Chemiluminescence,'' or ASTM D3246–81 (Reapproved 1987) ''Standard Test Method for Sulfur in Petroleum Gas By Oxidative Microcoulometry'' (incorporated by reference under §75.6). The test may be performed by the owner or operator, an outside laboratory, or the gas supplier.

2.3.1.2 Results from the analysis must be available on-site no later than thirty calendar days after the sample is taken.

2.3.1.3 Determine the heat content or gross calorific value for at least one sample each month and use the procedures of section 5.5 of appendix F of this part to determine the heat input for each hour the unit combusted gaseous fuel.

2.3.1.4 Multiply the sulfur content by the hourly metered volume of gas combusted in 100 scf, using Equation D–4 of this appendix.

2.3.2 If the fuel is pipeline natural gas, calculate SO_2 emissions using a default SO_2 emission rate of 0.0006 lb/mmBtu.

2.3.2.1 Use the default SO_2 emission rate of 0.0006 lb/mmBtu and the hourly heat input from pipeline natural gas in mmBtu/hr, as determined using the procedures in section 5.5 of appendix F of this part. Calculate SO_2

emissions using Equation D–5 of this appendix.

2.3.2.2 Provide information on the contractual sulfur content from the pipeline gas supplier in the monitoring plan for the unit, demonstrating that the gas has a hydrogen sulfide content of 1 grain/100 scf or less, and a total sulfur content of 20 grain/100 scf or less.

2.4 Missing Data Procedures.

When data from the procedures of this part are not available, provide substitute data using the following procedures.

2.4.1 When sulfur content or oil density data from the analysis of an oil sample or when sulfur content data from the analysis of a gaseous fuel sample are missing or invalid, substitute, as applicable, the highest measured sulfur content or oil density (if using a volumetric oil flowmeter) recorded during the previous 30 days when the unit burned that fuel. If no previous sulfur content data are available, substitute the maximum potential sulfur content of that fuel.

2.4.2 When gross calorific value data from the analysis of an oil sample are missing or invalid, substitute the highest measured gross calorific value recorded during the previous 30 days that the unit burned oil. When gross calorific value data from the analysis of a monthly gaseous fuel sample are missing or invalid, substitute the highest measured gross calorific value recorded during the previous three months that the unit burned gaseous fuel.

2.4.3 Whenever data are missing from any fuel flowmeter that is part of an excepted monitoring system under appendix D or E of this part, where the fuel flowmeter data are required to determine the amount of fuel combusted by the unit, use the procedures in either section 2.4.3.1 or sections 2.4.3.2 and 2.4.3.3 prior to January 1, 1996 and use the procedures in sections 2.4.3.2 and 2.4.3.3 but do not use the procedures in section 2.4.3.1 on or after January 1, 1996 to account for the flow rate of fuel combusted at the unit for each hour during the missing data period.

2.4.3.1 [Reserved]

2.4.3.2 For hours where only one fuel is combusted, substitute for each hour in the missing data period the average of the hourly fuel flow rate(s) measured and recorded by the fuel flowmeter (or flowmeters, where fuel is recirculated) at the corresponding operating unit load range recorded for each missing hour during the previous 720 hours during which the unit combusted that same fuel only. Establish load ranges for the unit using the procedures of section 2 in appendix C of this part for missing volumetric flow rate data. If no fuel flow rate data are available at the corresponding load range, use data from the next higher load range where data are available. If no fuel flow rate data are available at either the corresponding load range or a higher load range during any hour of the missing data period for that fuel, substitute the maximum potential fuel flow rate. The maximum potential fuel flow rate is the lesser of the following: (1) the maximum fuel flow rate the unit is capable of combusting or (2) the maximum flow rate that the flowmeter can measure.

2.4.3.3 For hours where two or more fuels are combusted, substitute the maximum hourly fuel flow rate measured and recorded by the flowmeter (or flowmeters, where fuel is recirculated) for the fuel for which data are missing at the corresponding load range recorded for each missing hour during the previous 720 hours when the unit combusted that fuel with any other fuel. For hours where no previous recorded fuel flow rate data are available for that fuel during the missing data period, calculate and substitute the maximum potential flow rate of that fuel for the unit as defined in section 2.4.3.2 of this appendix.

2.4.4. In any case where the missing data provisions of this section require substitution of data measured and recorded more than three years (26,280 clock hours) prior to the date and time of the missing data period, use three years (26,280 clock hours) in place of the prescribed lookback period.

3. CALCULATIONS

Use the calculation procedures in section 3.1 of this appendix to calculate SO_2 mass emissions. Where an oil flowmeter records volumetric flow, use the calculation procedures in section 3.2 of this appendix to calculate mass flow of oil. Calculate hourly SO_2 mass emissions from gaseous fuel using the procedures in section 3.3 of this appendix. Calculate hourly heat input for oil and for gaseous fuel using the equations in section 5.5 of Appendix F of this part. Calculate total SO_2 mass emissions and heat input as provided under section 3.4 of this appendix.

3.1 SO_2 Mass Emissions Calculation for Oil

3.1.1 Use the following equation to calculate SO_2 mass emissions per hour (in lb/hr).

$$M_{so2}=2.0\times M_{oil}\times \%S_{oil}/100.0$$

(Eq. D–2)

Where:

M_{SO2}=Hourly mass of SO_2 emitted from combustion of oil, lb/hr.

M_{oil}=Mass of oil consumed per hr, lb/hr.

$\%S_{oil}$=Percentage of sulfur by weight measured in the sample.

2.0=Ratio of lb SO_2/lb S.

3.1.2 Record the SO_2 mass emissions from oil for each hour that oil is combusted.

3.2 Mass Flow Calculation for Oil Using Volumetric Flow

3.2.1 Where the oil flowmeter records volumetric flow rather than mass flow, calculate and record the oil mass flow for each hourly period using hourly oil flow measurements and the density or specific gravity of the oil sample.

3.2.2 Convert density, specific gravity, or API gravity of the oil sample to density of the oil sample at the sampling location's temperature using ASTM D1250–80 (Reapproved 1990), ''Standard Guide for Petroleum Measurement Tables'' (incorporated by reference under §75.6 of this part).

3.2.3 Where density of the oil is determined by the applicable ASTM procedures from section 2.2.5 of this appendix, use the following equation to calculate the mass of oil consumed (in lb/hr).

$M_{oil}=V_{oil}\times D_{oil}$
(Eq. D–3)

where,

M_{oil}=Mass of oil consumed per hr, lb/hr.

V_{oil}=Volume of oil consumed per hr, measured in scf, gal, barrels, or m^3.

D_{oil}=Density of oil, measured in lb/scf, lb/gal, lb/barrel, or lb/m^3.

3.2.4 Calculate the hourly heat input to the unit from oil (mmBtu) by multiplying the heat content of the daily oil sample by the hourly oil mass.

3.3 SO_2 Mass Emissions Calculation for Gaseous Fuels

3.3.1 Use the following equation to calculate the SO_2 emissions using the gas sampling and analysis procedures in section 2.3.1 of this appendix:

$$M_{SO_2g}=\left(\frac{2.0}{7000}\right)\times Q_g\times S_g \qquad \text{(Eq. D–4)}$$

Where:

M_{SO2g}=Hourly mass of SO_2 emitted due to combustion of gaseous fuel, lb/hr.

Q_g=Hourly metered flow or amount of gaseous fuel combusted, 100 scf/hr.

S_g=Sulfur content of gaseous fuel, in grain/100 scf.

2.0=Ratio of lb SO_2/lb S.

7000=Conversion of grains/100 scf to lb/100 scf.

3.3.2 Use the following equation to calculate the SO_2 emissions using the 0.0006 lb/mmBtu emission rate in section 2.3.2 of this appendix:

$$M_{SO_2g}=ER\times HI_g \qquad \text{(Eq. D–5)}$$

Where:

M_{SO2g}=Hourly mass of SO_2 emissions from combustion of pipeline natural gas, lb/hr.

ER=SO_2 emission rate of 0.0006 lb/mmBtu for pipeline natural gas.

HI_g=Hourly heat input of pipeline natural gas, calculated using procedures in appendix F of this part, in mmBtu/hr.

3.3.3 Record the SO_2 mass emissions for each hour when the unit combusts gaseous fuel.

3.4 Records and Reports

Calculate and record quarterly and cumulative SO_2 mass emissions and heat input for each calendar quarter and for the calendar year by summing the hourly values. Calculate and record SO_2 emissions and heat input data using a data acquisition and handling system. Report these data in a standard electronic format specified by the Administrator.

[58 FR 3701, Jan. 11, 1993, as amended at 60 FR 26548, 26551, May 17, 1995; 61 FR 25585, May 22, 1996]

APPENDIX E TO PART 75—OPTIONAL NO_x EMISSIONS ESTIMATION PROTOCOL FOR GAS-FIRED PEAKING UNITS AND OIL-FIRED PEAKING UNITS

1. APPLICABILITY

1.1 Unit Operation Requirements

This NO_X emissions estimation procedure may be used in lieu of a continuous NO_X emission monitoring system (lb/mmBtu) for determining the average NO_X emission rate and hourly NO_X rate from gas-fired peaking units and oil-fired peaking units as defined in §72.2 of this chapter. If a unit's operations exceed the levels required to be a peaking unit, install and certify a continuous NO_X emission monitoring system no later than December 31 of the following calendar year. The provisions of §75.12 apply to excepted monitoring systems under this appendix.

1.2 Certification

1.2.1 Pursuant to the procedures in §75.20, complete all testing requirements to certify use of this protocol in lieu of a NO_X continuous emission monitoring system no later than the applicable deadline specified in §75.4. Apply to the Administrator for certification to use this method no later than 45 days after the completion of all certification testing. Whenever the monitoring method is to be changed, reapply to the Administrator for certification of the new monitoring method.

1.2.2 If the owner or operator has already successfully completed certification testing of the unit using the protocol of appendix E of part 75 and submitted a certification application under §75.20(g) prior to _____ July 17, 1995, the unit's monitoring system does not need to repeat initial certification testing using the revised procedures published _____ May 17, 1995.

2. PROCEDURE

2.1 Initial Performance Testing

Use the following procedures for: measuring NO_X emission rates at heat input rate levels corresponding to different load levels; measuring heat input rate; and plotting the correlation between heat input rate and NO_X emission rate, in order to determine the emission rate of the unit(s).

2.1.1 Load Selection

Establish at least four approximately equally spaced operating load points, ranging from the maximum operating load to the minimum operating load. Select the maximum and minimum operating load from the operating history of the unit during the most recent two years. (If projections indicate that the unit's maximum or minimum operating load during the next five years will be significantly different from the most recent two years, select the maximum and minimum operating load based on the projected dispatched load of the unit.) For new gas-fired peaking units or new oil-fired peaking units, select the maximum and minimum operating load from the expected maximum and minimum load to be dispatched to the unit in the first five calendar years of operation.

2.1.2 NO_X and O_2 Concentration Measurements

Use the following procedures to measure NO_X and O_2 concentration in order to determine NO_X emission rate.

2.1.2.1 For boilers, select an excess O_2 level for each fuel (and, optionally, for each combination of fuels) to be combusted that is representative for each of the four or more load levels. If a boiler operates using a single, consistent combination of fuels only, the testing may be performed using the combination rather than each fuel. If a fuel is combusted only for the purpose of testing ignition of the burners for a period of five minutes or less per ignition test or for start-up, then the boiler NO_X emission rate does not need to be tested separately for that fuel. Operate the boiler at a normal or conservatively high excess oxygen level in conjunction with these tests. Measure the NO_X and O_2 at each load point for each fuel or consistent fuel combination (and, optionally, for each combination of fuels) to be combusted. Measure the NO_X and O_2 concentrations according to Method 7E and 3A in appendix A of part 60 of this chapter. Select sampling points as specified in section 5.1, Method 3 in appendix A of part 60 of this chapter. The designated representative for the unit may also petition the Administrator under §75.66 to use fewer sampling points. Such a petition shall include the proposed alternative sampling procedure and information demonstrating that there is no concentration stratification at the sampling location.

2.1.2.2 For stationary gas turbines, select sampling points and measure the NO_X and O_2 concentrations at each load point for each fuel or consistent combination of fuels (and, optionally, each combination of fuels) according to appendix A, Method 20 of part 60 of this chapter. For diesel or dual fuel reciprocating engines, measure the NO_X and O_2 concentrations according to Method 20, but modify Method 20 by selecting a sampling site to be as close as practical to the exhaust of the engine.

2.1.2.3 Allow the unit to stabilize for a minimum of 15 minutes (or longer if needed for the NO_X and O_2 readings to stabilize) prior to commencing NOx, O_2, and heat input measurements. Determine the average measurement system response time according to section 5.5 of Method 20 in appendix A, part 60 of this chapter. When inserting the probe into the flue gas for the first sampling point in each traverse, sample for at least one minute plus twice the average measurement system response time (or longer, if necessary to obtain a stable reading). For all other sampling points in each traverse, sample for at least one minute plus the average measurement response time (or longer, if necessary to obtain a stable reading). Perform three test runs at each load condition and obtain an arithmetic average of the runs for each load condition. During each test run on a boiler, record the boiler excess oxygen level at 5 minute intervals.

2.1.3 Heat Input

Measure the total heat input (mmBtu) and heat input rate during testing (mmBtu/hr) as follows:

2.1.3.1 When the unit is combusting fuel, measure and record the flow of fuel consumed. Measure the flow of fuel with an in-line flowmeter(s) and automatically record the data. If a portion of the flow is diverted from the unit without being burned, and that diversion occurs downstream of the fuel flowmeter, an in-line flowmeter is required to account for the unburned fuel. Install and calibrate in-line flow meters using the procedures and specifications contained in sections 2.1.2, 2.1.3, 2.1.4, and 2.1.5 of appendix D of this part. Correct any gaseous fuel flow rate measured at actual temperature and pressure to standard conditions of 68°F and 29.92 inches of mercury.

2.1.3.2 For liquid fuels, analyze fuel samples taken according to the requirements of section 2.2 of appendix D of this part to determine the heat content of the fuel. Determine heat content of liquid or gaseous fuel in accordance with the procedures in appendix F of this part. Calculate the heat input rate during testing (mmBtu/hr) associated with each load condition in accordance with Equations F–19 or F–20 in appendix F of this

part and total heat input using Equation E–1 of this appendix. Record the heat input rate at each heat input/load point.

2.1.4 Emergency Fuel

The designated representative of a unit that is restricted by its Federal, State or local permit to combusting a particular fuel only during emergencies where the primary fuel is not available may petition the Administrator pursuant to the procedures in §75.66 for an exemption from the requirements of this appendix for testing the NO_X emission rate during combustion of the emergency fuel. The designated representative shall include in the petition a procedure for determining the NO_X emission rate for the unit when the emergency fuel is combusted, and a demonstration that the permit restricts use of the fuel to emergencies only. The designated representative shall also provide notice under §75.61(a) for each period when the emergency fuel is combusted.

2.1.5 Tabulation of Results

Tabulate the results of each baseline correlation test for each fuel or, as applicable, combination of fuels, listing: time of test, duration, operating loads, heat input rate (mmBtu/hr), F-factors, excess oxygen levels, and NO_X concentrations (ppm) on a dry basis (at actual excess oxygen level). Convert the NO_X concentrations (ppm) to NO_X emission rates (to the nearest 0.01 lb/mm/Btu) according to Equation F–5 of appendix F of this part or 19–3 in Method 19 of appendix A of part 60 of this chapter, as appropriate. Calculate the NO_X emission rate in lb/mmBtu for each sampling point and determine the arithmetic average NO_X emission rate of each test run. Calculate the arithmetic average of the boiler excess oxygen readings for each test run. Record the arithmetic average of the three test runs as the NO_X emission rate and the boiler excess oxygen level for the heat input/load condition.

2.1.6 Plotting of Results

Plot the tabulated results as an x–y graph for each fuel and (as applicable) combination of fuels combusted according to the following procedures.

2.1.6.1 Plot the heat input rate (mmBtu/hr) as the independent (or x) variable and the NO_X emission rates (lb/mmBtu) as the dependent (or y) variable for each load point. Construct the graph by drawing straight line segments between each load point. Draw a horizontal line to the y-axis from the minimum heat input (load) point.

2.1.6.2 Units that co-fire gas and oil may be tested while firing gas only and oil only instead of testing with each combination of fuels. In this case, construct a graph for each fuel.

2.2 Periodic NO_x Emission Rate Testing

Retest the NO_x emission rate of the gas-fired peaking unit or the oil-fired peaking unit prior to the earlier of 3,000 unit operating hours or the 5-year anniversary and renewal of its operating permit under part 72 of this chapter.

2.3 Other Quality Assurance/Quality Control-Related NOx Emission Rate Testing

When the operating levels of certain parameters exceed the limits specified below, or where the Administrator issues a notice requesting retesting because the NO_X emission rate data availability for when the unit operates within all quality assurance/quality control parameters in this section since the last test is less than 90.0 percent, as calculated by the Administrator, complete retesting of the NO_X emission rate by the earlier of: (1) 10 unit operating days (as defined in section 2.1 of appendix B of this part) or (2) 180 calendar days after exceeding the limits or after the date of issuance of a notice from the Administrator to re-verify the unit's NO_X emission rate. Submit test results in accordance with §75.60(a) within 45 days of completing the retesting.

2.3.1 For a stationary gas turbine, obtain a list of at least four operating parameters indicative of the turbine's NO_X formation characteristics, and the recommended ranges for these parameters at each tested load-heat input point, from the gas turbine manufacturer. If the gas turbine uses water or steam injection for NO_X control, the water/fuel or steam/fuel ratio shall be one of these parameters. During the NOx-heat input correlation tests, record the average value of each parameter for each load-heat input to ensure that the parameters are within the manufacturer's recommended range. Redetermine the NO_X emission rate-heat input correlation for each fuel and (optional) combination of fuels after continuously exceeding the manufacturer's recommended range of any of these parameters for one or more successive operating periods totaling more than 16 unit operating hours.

2.3.2 For a diesel or dual-fuel reciprocating engine, obtain a list of at least four operating parameters indicative of the engine's NO_X formation characteristics, and the recommended ranges for these parameters at each tested load-heat input point, from the engine manufacturer. Any operating parameter critical for NO_X control shall be included. During the NO_X heat-input correlation tests, record the average value of each parameter for each load-heat input to ensure that the parameters are within the manufacturer's recommended range. Redetermine the NO_X emission rate-heat input correlation for each fuel and (optional) combination or fuels after continuously exceeding the manufacturer's recommended range of any of these

parameters for one or more successive operating periods totaling more than 16 unit operating hours.

2.3.3 For boilers using the procedures in this appendix, the NO_X emission rate heat input correlation for each fuel and (optional) combination of fuels shall be redetermined if the excess oxygen level at any heat input rate (or unit operating load) continuously exceeds by more than 2 percentage points O_2 from the boiler excess oxygen level recorded at the same operating heat input rate during the previous NO_X emission rate test for one or more successive operating periods totaling more than 16 unit operating hours.

2.4 Procedures for Determining Hourly NO_X Emission Rate

2.4.1 Record the time (hr. and min.), load (MWge or steam load in 1000 lb/hr), fuel flow rate and heat input rate (using the procedures in section 2.1.3 of this appendix) for each hour during which the unit combusts fuel. Calculate the total hourly heat input using Equation E–1 of this appendix. Record the heat input rate for each fuel to the nearest 0.1 mmBtu/hr. During partial unit operating hours or during hours where more than one fuel is combusted, heat input must be represented as an hourly rate in mmBtu/hr, as if the fuel were combusted for the entire hour at that rate (and not as the actual, total heat input during that partial hour or hour) in order to ensure proper correlation with the NO_X emission rate graph.

2.4.2 Use the graph of the baseline correlation results (appropriate for the fuel or fuel combination) to determine the NO_X emissions rate (lb/mmBtu) corresponding to the heat input rate (mmBtu/hr). Input this correlation into the data acquisition and handling system for the unit. Linearly interpolate to 0.1 mmBtu/hr heat input rate and 0.01 lb/mmBtu NO_X.

2.4.3 To determine the NO_X emission rate for a unit co-firing fuels that has not been tested for that combination of fuels, interpolate between the NO_X emission rate for each fuel as follows. Determine the heat input rate for the hour (in mmBtu/hr) for each fuel and select the corresponding NO_X emission rate for each fuel on the appropriate graph. (When a fuel is combusted for a partial hour, determine the fuel usage time for each fuel and determine the heat input rate from each fuel as if that fuel were combusted at that rate for the entire hour in order to select the corresponding NO_X emission rate.) Calculate the total heat input to the unit in mmBtu for the hour from all fuel combusted using Equation E–1. Calculate a Btu-weighted average of the emission rates for all fuels using Equation E–2 of this appendix.

2.4.4 For each hour, record the critical quality assurance parameters, as identified in the monitoring plan, and as required by section 2.3 of this appendix.

2.5 Missing Data Procedures

Provide substitute data for each unit electing to use this alternative procedure whenever a valid quality-assured hour of NO_X emission rate data has not been obtained according to the procedures and specifications of this appendix.

2.5.1 Use the procedures of this section whenever any of the quality assurance/quality control parameters exceeds the limits in section 2.3 of this appendix or whenever any of the quality assurance/quality control parameters are not available.

2.5.2 Substitute missing NO_X emission rate data using the highest NO_X emission rate tabulated during the most recent set of baseline correlation tests for the same fuel or, if applicable, combination of fuels.

2.5.3 Maintain a record indicating which data are substitute data and the reasons for the failure to provide a valid quality-assured hour of NO_X emission rate data according to the procedures and specifications of this appendix.

2.5.4 Substitute missing data from a fuel flowmeter using the procedures in section 2.4.3 of appendix D of this part.

2.5.5 Substitute missing data for gross calorific value of fuel using the procedures in section 2.4.2 of appendix D of this part.

3. CALCULATIONS

3.1 Heat Input

Calculate the total heat input by summing the product of heat input rate and fuel usage time of each fuel, as in the following equation:

$$H_T = HI_{fuel1}\ t_1 + HI_{fuel2}\ t_2 + HI_{fuel3}\ t_3 + \ldots + HI_{lastfuel}\ t_{last} \quad \text{(Eq. E–1)}$$

Where:

H_T = Total heat input of fuel flow or a combination of fuel flows to a unit, mmBtu;

$HI_{fuel\ 1,2,3,\ldots last}$ = Heat input rate from each fuel during fuel usage time, in mmBtu/hr, as determined using equation F–19 or F–20 in section 5.5 of appendix F of this part, mmBtu/hr;

$t_{1,2,3\ldots last}$ = Fuel usage time for each fuel, rounded up to the nearest .25 hours.

NOTE: For hours where a fuel is combusted for only part of the hour, use the fuel flow rate or mass flow rate during the fuel usage time, instead of the total fuel flow during the hour, when calculating heat input rate using Equation F–19 or F–20.

3.2 F-factors

Determine the F-factors for each fuel or combination of fuels to be combusted according to section 3.3 of appendix F of this part.

3.3 NO_X Emission Rate

3.3.1 Conversion from Concentration to Emission Rate [Amended]

Convert the NO_X concentrations (ppm) and O_2 concentrations to NO_X emission rates (to the nearest 0.01 lb/mmBtu) according to the appropriate one of the following equations: F–5 in appendix F of this part for dry basis concentration measurements, or 19–3 in Method 19 of appendix A of part 60 of this chapter for wet basis concentration measurements.

3.3.2 Quarterly Average NO_X Emission Rate

Report the quarterly average emission rate (lb/mmBtu) as required in subpart G of this part. Calculate the quarterly average NO_X emission rate according to Equation F–9 in Appendix F of this part.

3.3.3 Annual Average NO_X Emission Rate

Report the average emission rate (lb/mmBtu) for the calendar year as required in subpart G of this part. Calculate the average NO_X emission rate according to equation F–10 in appendix F of this part.

3.3.4 Average NO_X Emission Rate During Co-firing of Fuels [Amended] (Eq. E–2)

Where:

E_h=NO_X emission rate for the unit for the hour, lb/mmBtu;

$$E_h = \frac{\sum_{f=1}^{\text{all fuels}} \left(E_f \times HI_f \; t_f\right)}{H_T}$$

E_f=NO_X emission rate for the unit for a given fuel at heat input rate HI_f, lb/mmBtu;

HI_f=Heat input rate for a given fuel during the fuel usage time, as determined using equation F–19 or F–20 in section 5.5 of appendix F of this part, mmBtu/hr;

H_T=Total heat input for all fuels for the hour from Equation E–1;

t_t=Fuel usage time for each fuel, rounded to the nearest .25 hour.

NOTE: For hours where a fuel is combusted for only part of the hour, use the fuel flow rate or mass flow rate during the fuel usage time, instead of the total fuel flow or mass flow during the hour, when calculating heat input rate using Equation F–19 or F–20.

4. QUALITY ASSURANCE/QUALITY CONTROL PLAN

Include a section on the NO_X emission rate determination as part of the monitoring quality assurance/quality control plan required under §75.21 and appendix B of this part for each gas-fired peaking unit and each oil-fired peaking unit. In this section present information including, but not limited to, the following: (1) a copy of all data and results from the initial NO_X emission rate testing, including the values of quality assurance parameters specified in Section 2.3 of this appendix; (2) a copy of all data and results from the most recent NO_X emission rate load correlation testing; (3) a copy of the unit manufacturer's recommended range of quality assurance- and quality control-related operating parameters.

4.1 Submit a copy of the unit manufacturer's recommended range of operating parameter values, and the range of operating parameter values recorded during the previous NO_X emission rate test that determined the unit's NO_X emission rate, along with the unit's revised monitoring plan submitted with the certification application.

4.2 Keep records of these operating parameters for each hour of operation in order to demonstrate that a unit is remaining within the manufacturer's recommended operating range.

[58 FR 3701, Jan. 11, 1993, as amended at 60 FR 26551-26553, May 17, 1995]

APPENDIX F TO PART 75—CONVERSION PROCEDURES

1. APPLICABILITY

Use the procedures in this appendix to convert measured data from a monitor or continuous emission monitoring system into the appropriate units of the standard.

2. PROCEDURES FOR SO_2 EMISSIONS

Use the following procedures to compute hourly, quarterly, and annual SO_2 mass emissions (in lb/hr). Use the procedures in Method 19 in Appendix A to part 60 of this chapter to compute hourly SO_2 emission rates (in lb/mmBtu) for qualifying Phase I technologies.

2.1 When measurements of SO_2 concentration and flow rate are on a wet basis, use the following equation to compute hourly SO_2 mass emissions (in lb/hr).

$E_h = K\ C_h\ Q_h$

(Eq. F–1)

where,

E_h=Hourly SO_2 mass emissions, lb/hr.

$K=1.660\times10^{-7}$ for SO_2, (lb/scf)/ppm.

C_h=Hourly average SO_2 concentration, stack moisture basis, ppm.

Q_h=Hourly average volumetric flow rate, stack moisture basis, scfh.

2.2 When measurements by the SO_2 pollutant concentration monitor are on a dry basis and the flow rate monitor measurements are on a wet basis, use the following equation to compute hourly SO_2 mass emissions (in lb/hr).

$$E_h = K\ C_{hp}\ Q_{hs}\ \frac{(100 - \%H_2O)}{100}$$

(Eq. F–2)

where,

E_h=Hourly SO_2 mass emissions, lb/hr.

K=1.660×10^{-7} for SO_2 , (lb/scf)/ppm.

C_{hp}=Hourly average SO_2 concentration, ppm (dry).

Q_{hs}=Hourly average volumetric flow rate, scfh as measured (wet).

%H_2O=Hourly average stack moisture content, percent by volume.

2.3 Use the following equations to calculate total SO_2 mass emissions for each calendar quarter (Eq. F–3) and for each calendar year (Eq. F–4) in tons.

$$E_q = \frac{\sum_{h=1}^{n} E_h}{2000}$$

(Eq. F–3)

where,

E_q=Quarterly total SO_2 mass emissions, tons.

E_h=Hourly SO_2 mass emissions, lb/hr.

n=Number of hourly SO_2 emissions values during calendar quarter.

2000=Conversion of 2000 lb per ton.

$$E_a = \sum_{q=1}^{4} E_q$$

(Eq. F–4)

where,

E_a=Annual total SO_2 mass emissions, tons.

E_q=Quarterly SO_2 mass emissions, tons.

q=Quarters for which E_q are available during calendar year.

2.4 Round all SO_2 mass emissions to the number of decimal places identified in §75.50(c) or §75.54(c) of this part (in lb/hr).

3. PROCEDURES FOR NO_x EMISSION RATE

Use the following procedures to convert continuous emission monitoring system measurements of NO_x concentration (ppm) and diluent concentration (percentage) into NO_x emission rates (in lb/mmBtu). Perform measurements of NO_x and diluent (O_2 or CO_2) concentrations on the same moisture (wet or dry) basis.

3.1 When the NO_x continuous emission monitoring system uses O_2 as the diluent, and measurements are performed on a dry basis, use the following conversion procedure:

$$E = K\ C_h\ F\ \frac{20.9}{20.9 - \%O_2}$$

(Eq. F–5)

where,

K, E, C_h, F, and %O_2 are defined in section 3.3 of this appendix. When measurements are performed on a wet basis, use the equations in Method 19 in Appendix A of part 60 of this chapter.

3.2 When the NO_X continuous emission monitoring system uses CO_2 as the diluent, use the following conversion procedure:

$$E = K\ C_h\ F_c\ \frac{100}{\%CO_2}$$

(Eq. F–6)

where:

K, E, Ch, Fc, and %CO_2 are defined in section 3.3 of this appendix.

When CO_2 and NO_X measurements are performed on a different moisture basis, use the equations in Method 19 in Appendix A of part 60 of this chapter.

3.3 Use the definitions listed below to derive values for the parameters in Equations F–5 and F–6 of this appendix.

3.3.1 K=1.194x10−7 (lb/dscf)/ppm NO_x.

3.3.2 E=pollutant emissions, lb/mmBtu.

3.3.3 C_h=hourly average pollutant concentration, ppm.

3.3.4 %O_2, %CO_2=oxygen or carbon dioxide volume (expressed as percent O_2 or CO_2).

3.3.5 F, F_c=a factor representing a ratio of the volume of dry flue gases generated to the caloric value of the fuel combusted (F), and a factor representing a ratio of the volume of CO_2 generated to the calorific value of the fuel combusted (F_c), respectively. Table 1 lists the values of F and F_c for different fuels. A minimum concentration of 5.0 percent CO_2 and a maximum concentration of 14.0 percent O_2 may be substituted for measured diluent gas concentration values during unit start-up.

TABLE 1.—F- AND F_c-FACTORS [1]

Fuel	F-factor (dscf/mmBtu)	F_c-factor (scf CO_2/mmBtu)
Coal (as defined by ASTM D388–92):		
Anthracite	10,100	1,970
Bituminous and subbituminous	9,780	1,800
Lignite	9,860	1,910
Oil	9,190	1,420
Gas:		
Natural gas	8,710	1,040
Propane	8,710	1,190
Butane	8,710	1,250
Wood:		
Bark	9,600	1,920
Wood residue	9,240	1,830

[1] Determined at standard conditions: 20 °C (68 °F) and 29.92 inches of mercury.

3.3.6 Equations F–7a and F–7b may be used in lieu of the F or F_c factors specified in Section 3.3.5 of this appendix to calculate an F factor (dscf/mmBtu) on a dry basis or an F_c factor (scf CO_2/mmBtu) on either a dry or wet basis.

(Calculate all F- and F_c factors at standard conditions of 20 °C (68 °F) and 29.92 inches of mercury.)

$$F = \frac{3.64(\%H) + 1.53(\%C) + 0.57(\%S) + 0.14(\%N) - 0.46(\%O)}{GCV} \times 10^6$$

(Eq. F–7a)

$$F_c = \frac{321 \times 10^3 (\%C)}{GCV}$$

(Eq. F–7b)

3.3.6.1 H, C, S, N, and O are content by weight of hydrogen, carbon, sulfur, nitrogen, and oxygen (expressed as percent), respectively, as determined on the same basis as the gross calorific value (GCV) by ultimate analysis of the fuel combusted using ASTM D3176–89, ''Standard Practice for Ultimate Analysis of Coal and Coke'' (solid fuels), ASTM D5291–92, ''Standard Test Methods for Instrumental Determination of Carbon, Hydrogen, and Nitrogen in Petroleum Products and Lubricants'' (liquid fuels) or computed from results using ASTM D1945–91, ''Standard Test Method for Analysis of Natural Gas by Gas Chromatography'' or ASTM D1946–90, ''Standard Practice for Analysis of Reformed Gas by Gas Chromatography'' (gaseous fuels) as applicable. (These methods are incorporated by reference under §75.6 of this part.)

3.3.6.2 GCV is the gross calorific value (Btu/lb) of the fuel combusted determined by ASTM D2015–91, ''Standard Test Method for Gross Calorific Value of Coal and Coke by the Adiabatic Bomb Calorimeter'', ASTM D1989–92 ''Standard Test Method for Gross Calorific Value of Coal and Coke by Microprocessor Controlled Isoperibol Calorimeters,'' or ASTM D3286–91a ''Standard Test Method for Gross Calorific Value of Coal and Coke by the Isoperibol Bomb Calorimeter'' for solid and liquid fuels, and ASTM D240–87 (Reapproved 1991) ''Standard Test Method for Heat of Combustion of Liquid Hydrocarbon Fuels by Bomb Calorimeter'', or ASTM D2382–88 ''Standard Test Method for Heat of Combustion of Hydrocarbon Fuels by Bomb Calorimeter (High-Precision Method)'' for oil; and ASTM D3588–91 ''Standard Practice for Calculating Heat Value, Compressibility Factor, and Relative Density (Specific Gravity) of Gaseous Fuels,'' ASTM D4891–89 ''Standard Test Method for Heating Value of Gases in Natural Gas Range by Stoichiometric Combustion,'' GPA Standard 2172 86 ''Calculation of Gross Heating Value, Relative Density and Compressibility Factor for Natural Gas Mixtures from Compositional Analysis,'' GPA Standard 2261–90 ''Analysis for Natural Gas and Similar Gaseous Mixtures by Gas Chromatography,'' or ASTM D1826–88, ''Standard Test Method for Calorific (Heating) Value of Gases in Natural Gas Range by Continuous Recording Calorimeter'' for gaseous fuels, as applicable. (These methods are incorporated by reference under §75.6).

3.3.6.3 For affected units that combust a combination of fossil (coal, oil and gas) and nonfossil (e.g., bark, wood, residue, or refuse)

fuels, the F or F_c value is subject to the Administrator's approval.

3.3.6.4 For affected units that combust combinations of fossil fuels or fossil fuels and wood residue, prorate the F or F_c factors determined by Section 3.3.5 of this appendix in accordance with the applicable formula as follows:

$$F = \sum_{i=1}^{n} X_i F_i \qquad F_c = \sum_{i=1}^{n} X_i (F_c)_i$$

(Eq. F–8)

where,

X_i = Fraction of total heat input derived from each type of fuel (e.g., natural gas, bituminous coal, wood).

F_i or $(F_c)_i$ = Applicable F or F_c factor for each fuel type determined in accordance with Section 3.3.5 of this appendix.

n = Number of fuels being combusted in combination.

3.4 Use the following equations to calculate the average NO_X emission rate for each calendar quarter (Eq. F–9) and the average emission rate for the calendar year (Eq. F–10) in lb/mmBtu.

$$E_q = \sum_{i=1}^{n} \frac{E_i}{n} \qquad \text{(Eq. F–9)}$$

where:

Eq=Quarterly average NO_X emission rate, lb/mmBtu.

Ei=Hourly average Nox emission rate, lb/mmBtu.

n=Number of hourly rates during calendar quarter.

$$E_a = \sum_{i=1}^{m} \frac{E_i}{m} \qquad \text{(Eq. F – 10)}$$

where:

E_a=Average NO_X emission rate for the calendar year, lb/mmBtu.

E_i=Hourly average NO_X emission rate, lb/mmBtu.

m=Number of hours for which E_i is available in the calendar year.

3.5 Round all NO_x emission rates to the nearest 0.01 lb/mmBtu.

4. Procedures for CO_2 Mass Emissions

Use the following procedures to convert continuous emission monitoring system measurements of CO_2 concentration (percentage) and volumetric flow rate (scfh) into CO_2 mass emissions (in tons/day) when the owner or operator uses a CO_2 continuous emission monitoring system (consisting of a CO_2 or O_2 pollutant monitor) and a flow monitoring system to monitor CO_2 emissions from an affected unit.

4.1 When CO_2 concentration is measured on a wet basis, use the following equation to calculate hourly CO_2 mass emissions rates (in tons/hr).

$$E_h = K\, C_h\, Q_h$$

(Eq. F–11)

where,

E_h = Hourly CO_2 mass emissions, tons/hr.

$K = 5.7 \times 10^{-7}$ for CO_2, (tons/scf) /%CO_2.

C_h=Hourly average CO_2 concentration, stack moisture basis, %CO_2. A minimum concentration of 5.0 percent CO_2 may be substituted for the measured concentration during unit start-up.

Q_h = Hourly average volumetric flow rate, stack moisture basis, scfh.

4.2 When CO_2 concentration is measured on a dry basis, use Equation F–2 to calculate the hourly CO_2 mass emissions (in tons/hr) with a K-value of 5.7 x 10^{-7} (tons/scf)%CO_2, where E_h = hourly CO_2 mass emissions, tons/hr and C_{hp} = hourly average CO_2 concentration in flue; dry basis, %CO_2.

4.3 Use the following equations to calculate total CO_2 mass emissions for each calendar quarter (Equation F–12 and for each calendar year (Equation F–13).

$$E_{CO_{2q}} = \sum_{i=1}^{H_R} E_{h_i}$$

(Eq. F–12)

where,

E_{CO2q} = Quarterly total CO_2 mass emissions, tons.

E_{hi} = Hourly CO_2 mass emissions (tons/hr).

H_R = Number of hourly CO_2 mass emissions available during calendar quarter.

$$E_{CO_{2a}} = \sum_{q=1}^{4} E_{CO_{2q}}$$

(Eq. F–13)

where,

E_{CO2a}=Annual total CO_2 mass emissions, tons.

E_{CO2q}=Quarterly total CO_2 mass emissions, tons.

q=Quarters for which E_{CO2q} are available during calendar year.

4.4 For an affected unit, when the owner or operator is continuously monitoring O_2 concentration (in percent by volume) of flue gases using an O_2 monitor, use the equations

and procedures in section 4.4.1 through 4.4.3 of this appendix to determine hourly CO_2 mass emissions (in tons).

4.4.1 Use appropriate F and F_c factors from section 3.3.5 of this appendix in the following equation to determine hourly average CO_2 concentration of flue gases (in percent by volume).

$$CO_{2d} = 100 \frac{F_c}{F} \frac{20.9 - O_{2d}}{20.9}$$

(Eq. F–14a)

Where:

CO_{2d}=Hourly average CO_2 concentration, percent by volume, dry basis.

F, F_c=F-factor or carbon-based Fc-factor from section 3.3.5 of this appendix.

20.9=Percentage of O_2 in ambient air.

O_{2d}=Hourly average O_2 concentration, percent by volume, dry basis. A maximum concentration of 14.0 percent O2 may be substituted for the measured concentration during unit start-up.

or

$$CO_{2w} \frac{100}{20.9} \frac{F_c}{F} \left[20.9 \left(\frac{100 - \%H_2O}{100} \right) - O_{2w} \right]$$

(Eq. F–14b)

Where:

CO_{2w}=Hourly average CO_2 concentration, percent by volume, wet basis.

O_{2w}=Hourly average O_2 concentration, percent by volume, wet basis. A maximum concentration of 14.0 percent O_2 may be substituted for the measured concentration during unit start-up.

F, F_c=F-factor or carbon-based F_c-factor from section 3.3.5 of this appendix.

20.9=Percentage of O_2 in ambient air.

$\%H_2O$=Moisture content of gas in the stack, percent.

4.4.2 Determine CO_2 mass emissions (in tons) from hourly average CO_2 concentration (percent by volume) using Equation F–11 and the procedure in section 4.1, where O_2 measurements are on a wet basis, or using the procedures in section 4.2 of this appendix, where O_2 measurements are on a dry basis.

5. Procedures for Heat Input

Use the following procedures to compute heat input to an affected unit (in mmBtu/hr or mmBtu/day).

5.1 Calculate and record heat input to an affected unit on an hourly basis, except as provided below. The owner or operator may choose to use the provisions specified in §75.16(e) or in section 2.1.2 of appendix D of this part in conjunction with the procedures provided below to apportion heat input among each unit using the common stack or common pipe header.

5.2 For an affected unit that has a flow monitor (or approved alternate monitoring system under subpart E of this part for measuring volumetric flow rate) and a diluent gas (O_2 or CO_2) monitor, use the recorded data from these monitors and one of the following equations to calculate hourly heat input (in mmBtu/hr).

5.2.1 When measurements of CO_2 concentration are on a wet basis, use the following equation:

$$HI = Q_w \frac{1}{F_c} \frac{\%CO_{2w}}{100}$$

(Eq. F–15)

where,

HI=Hourly heat input, mmBtu/hr.

Q_w=Hourly average volumetric flow rate, wet basis, scfh.

F_c=Carbon-based F-factor, listed in Section 3.3.5 of this appendix for each fuel, scf/mmBtu.

$\%CO_{2w}$=Hourly concentration of CO_2, percent CO_2 wet basis. A minimum concentration of 5.0 percent CO_2 may be substituted for the measured concentration during unit startup.

5.2.2 When measurements of CO_2 concentration are on a dry basis, use the following equation:

$$HI = Q_h \left[\frac{(100 - \%H_2O)}{100F_c}\right]\left(\frac{\%CO_{2d}}{100}\right)$$

(Eq. F–16)

where

HI=Hourly heat input, mmBtu/hr.

Q_h=Hourly average volumetric flow rate, wet basis, scfh.

F_c=Carbon-based F-Factor, listed above in Section 3.3.5 of this appendix for each fuel, scf/mmBtu.

$\%CO_{2d}$=Hourly concentration of CO_2, percent CO_2 dry basis. A minimum concentration of 5.0 percent CO_2 may be substituted for the measured concentration during unit startup.

$\%H_2O$=Moisture content of gas in the stack, percent.

5.2.3 When measurements of O_2 concentration are on a wet basis, use the following equation:

$$HI = Q_w \frac{1}{F} \frac{[(20.9/100)(100 - \%H_2O) - \%O_{2w}]}{20.9}$$

(Eq. F–17)

where

HI=Hourly heat input, mmBtu/hr.

Q_w=Hourly average volumetric flow rate, wet basis, scfh.

F=Dry basis F-Factor, listed above in Section 3.3.5 of this appendix for each fuel, dscf/mmBtu.

$\%O_{2w}$=Hourly concentration of O_2, percent O_2 wet basis. A maximum concentration of 14.0 percent O_2 may be substituted for the measured concentration during unit startup.

$\%H_2O$=Hourly average stack moisture content, percent by volume.

5.2.4 When measurements of O_2 concentration are on a dry basis, use the following equation:

$$HI = Q_w \left[\frac{(100 - \%H_2O)}{100F}\right]\left[\frac{(20.9 - \%O_{2d})}{20.9}\right]$$

(Eq. F–18)

where,

HI=Hourly heat input, mmBtu/hr.

Q_w=Hourly average volumetric flow, wet basis, scfh.

F=Dry basis F-factor, listed above in Section 3.3.5 of this appendix for each fuel, dscf/mmBtu.

$\%H_2O$=Moisture content of the stack gas, percent.

$\%O_{2d}$=Hourly concentration of O_2, percent O_2 dry basis. A maximum concentration of 14.0 percent O_2 may be substituted for the measured concentration during unit startup.

5.3—5.4 [Reserved]

5.5 For a gas-fired or oil-fired unit that does not have a flow monitor and is using the procedures specified in appendix D to this part to monitor SO_2 emissions or for any affected unit using a common stack for which the owner or operator chooses to determine heat input by fuel sampling and analysis, use the following procedures to calculate hourly heat input in mmBtu/hr.

5.5.1 When the unit is combusting oil, use the following equation to calculate hourly heat input.

(Eq. F–19)

$$HI_o = M_o \frac{GCV_o}{10^6} \qquad \text{(Eq. F–19)}$$

Where:

HIo=Hourly heat input from oil, mmBtu/hr.

Mo=Mass of oil consumed per hour, as determined using procedures in appendix D of this part, in lb, tons, or kg.

GCVo=Gross calorific value of oil, as measured daily by ASTM D240–87 (Reapproved 1991), ASTM D2015–91, or ASTM D2382–88, Btu/unit mass (incorporated by reference under §75.6 of this part).

10^6=Conversion of Btu to mmBtu.

When performing oil sampling and analysis solely for the purpose of the missing data procedures in §75.36, oil samples for measuring GCV may be taken weekly and the procedures specified in appendix D of this part for determining the mass of oil consumed per hour are optional.

5.5.2 When the unit is combusting gaseous fuels, use the following equation to calculate heat input from gaseous fuels for each hour.

(Eq. F–20)

$$HI_g = \frac{Q_g \times GCV_g}{10{,}000} \qquad \text{(Eq. F–20)}$$

Where:

HI_g=Hourly heat input from gaseous fuel, mmBtu/hour.

Q_g=Metered flow or amount of gaseous fuel combusted during the hour, hundred cubic feet.

GCV_g=Gross calorific value of gaseous fuel, as determined by sampling at least every month the gaseous fuel is combusted, or as verified by the contractual supplier at least once every month the gaseous fuel is combusted using ASTM D1826–88, ASTM D3588–91, ASTM D4891–89, GPA Standard 2172–86 ''Calculation of Gross Heating Value, Relative Density and Compressibility Factor for Natural Gas Mixtures from Compositional Analysis,'' or GPA Standard 2261–90 ''Analysis for Natural Gas and Similar Gaseous Mixtures by Gas Chromatography,'' Btu/cubic foot (incorporated by reference under §75.6 of this part).

10,000=Conversion factor, (Btu-100 scf)/(mmBtu-scf).

5.5.3 When the unit is combusting coal, use the procedures, methods, and equations in sections 5.5.3.1–5.5.3.3 of this appendix to determine the heat input from coal for each 24-hour period. (All ASTM methods are incorporated by reference under §75.6 of this part.)

5.5.3.1 Perform coal sampling daily according to section 5.3.2.2 in Method 19 in appendix A to part 60 of this chapter and use ASTM Method D2234–89, ''Standard Test Methods for Collection of a Gross Sample of Coal,'' (incorporated by reference under §75.6) Type I, Conditions A, B, or C and systematic spacing for sampling. (When performing coal sampling solely for the purposes of the missing data procedures in §75.36, use of ASTM D2234–89 is optional, and coal samples may be taken weekly.)

5.5.3.2 Use ASTM D2013–86, ''Standard Method of Preparing Coal Samples for Analysis,'' for preparation of a daily coal sample and analyze each daily coal sample for gross calorific value using ASTM D2015–91, ''Standard Test Method for Gross Calorific Value of Coal and Coke by the Adiabatic Bomb Calorimeter'', ASTM 1989–92 ''Standard Test Method for Gross Calorific Value of Coal and Coke by Microprocessor Controlled Isoperibol Calorimeters,'' or ASTM 3286–91a ''Standard Test Method for Gross Calorific Value of Coal and Coke by the Isoperibol Bomb Calorimeter.'' (All ASTM methods are incorporated by reference under §75.6 of this part.)

On-line coal analysis may also be used if the on-line analytical instrument has been demonstrated to be equivalent to the applicable ASTM methods under §§75.23 and 75.66.

5.5.3.3 Calculate the heat input from coal using the following equation:

$$HI_c = M_c \frac{GCV_c}{500} \qquad \text{(Eq. F–21)}$$

(Eq. F–21)

Where:

HIc=Daily heat input from coal, mmBtu/day.

Mc=Mass of coal consumed per day, as measured and recorded in company records, tons.

GCV_c=Gross calorific value of coal sample, as measured by ASTM D3176–89, D1989–92, D3286–91a, or D2015–91, Btu/lb.

500=Conversion of Btu/lb to mmBtu/ton.

5.5.4 For units obtaining heat input values daily instead of hourly, apportion the daily heat input using the fraction of the daily steam load or daily unit operating load used each hour in order to obtain HI_i for use in the above equations. Alternatively, use the hourly mass of coal consumed in equation F–21.

5.5.5 If a daily fuel sampling value for gross calorific value is not available, substitute the maximum gross calorific value measured from the previous 30 daily samples. If a monthly fuel sampling value for gross calorific value is not available, substitute the maximum gross calorific value measured from the previous 3 monthly samples.

5.5.6 If a fuel flow value is not available, use the fuel flowmeter missing data procedures in section 2.4 of appendix D of this part. If a daily coal consumption value is not available, substitute the maximum fuel feed rate during the previous thirty days when the unit burned coal.

5.5.7 Results for samples must be available no later than thirty calendar days after the sample is composited or taken. However, during an audit, the Administrator may require that the results be available in five business days, or sooner if practicable.

6. Procedure for Converting Volumetric Flow to STP

Use the following equation to convert volumetric flow at actual temperature and pressure to standard temperature and pressure.

$$F_{STP}=F_{Actual}(T_{Std}/T_{Stack})(P_{Stack}/P_{Std})$$

Where:

F_{STP}=Flue gas volumetric flow rate at standard temperature and pressure, scfh.

F_{Actual}=Flue gas volumetric flow rate at actual temperature and pressure, acfh.

T_{Std}=Standard temperature=528 °R.

T_{Stack}=Flue gas temperature at flow monitor location, °R, where °R=460+°F.

P_{Stack}=The absolute flue gas pressure=barometric pressure at the flow monitor location + flue gas static pressure, inches of mercury.

P_{Std}=Standard pressure=29.92 inches of mercury.

7. PROCEDURES FOR SO_2 MASS EMISSIONS AT UNITS WITH SO_2 CONTINUOUS EMISSION MONITORING SYSTEMS DURING THE COMBUSTION OF GASEOUS FUEL

Use the following equation to calculate hourly SO_2 mass emissions as allowed for units with SO_2 continuous emission monitoring systems during the combustion of pipeline natural gas under §75.11(e). These procedures are optional prior to January 1, 1997 and are required on or after January 1, 1997.

E_h=(0.0006) HI (Eq. F–23)

where,

E_h=Hourly SO_2 mass emissions, lb/hr.

0.0006=Default SO_2 emission rate for pipeline natural gas, lb/mmBtu.

HI=Hourly heat input, as determined using the procedures of section 5.2 of this appendix.

[58 FR 3701, Jan. 11, 1993; Redesignated and amended at 60 FR 26553-26556, 26571, May 17, 1995; 61 FR 25585, May 22, 1996]

EFFECTIVE DATE NOTE: At 60 FR 26571, May 17, 1995, appendix F to part 75 was amended by temporarily adding section 7, effective July 17, 1995 through December 31, 1996.

APPENDIX G TO PART 75—DETERMINATION OF CO_2 EMISSIONS

1. APPLICABILITY

The procedures in this appendix may be used to estimate CO_2 mass emissions discharged to the atmosphere (in tons/day) as the sum of CO_2 emissions from combustion and, if applicable, CO_2 emissions from sorbent used in a wet flue gas desulfurization control system, fluidized bed boiler, or other emission controls.

2. PROCEDURES FOR ESTIMATING CO_2 EMISSIONS FROM COMBUSTION

Use the following procedures to estimate daily CO_2 mass emissions from the combustion of fossil fuels. The optional procedure in section 2.3 of this appendix may also be used for an affected gas-fired unit. For an affected unit that combusts any nonfossil fuels (e.g., bark, wood, residue, or refuse), either use a CO_2 continuous emission monitoring system or apply to the Administrator for approval of a unit-specific method for determining CO_2 emissions.

2.1 Use the following equation to calculate daily CO_2 mass emissions (in tons/day) from the combustion of fossil fuels. Where fuel flow is measured in a common pipe header (i.e., a pipe carrying fuel for multiple units), the owner or operator may use the procedures in section 2.1.2 of appendix D of this part for combining or apportioning emissions, except that the term ''SO_2 mass emissions'' is replaced with the term ''CO_2 mass emissions.''

$$W_{CO_2} = \frac{\left(MW_C + MW_{O_2}\right) \times W_C}{2{,}000\, MW_C} \quad \text{(Eq. G–1)}$$

Where:

W_{co2}=CO_2 emitted from combustion, tons/day.

MW_c=Molecular weight of carbon (12.0).

MW_{o2}=Molecular weight of oxygen (32.0)

W_C=Carbon burned, lb/day, determined using fuel sampling and analysis and fuel feed rates. Collect at least one fuel sample during each week that the unit combusts coal or oil, one sample per each shipment for diesel fuel, and one fuel sample each month the unit combusts gaseous fuels. Collect coal samples from a location in the fuel handling system that provides a sample representative of the fuel bunkered or consumed during the week. Determine the carbon content of each fuel sampling using one of the following methods: ASTM D3178–89 for coal; ASTM D5291–92 ''Standard Test Methods for Instrumental Determination of Carbon, Hydrogen, and Nitrogen in Petroleum Products and Lubricants,'' ultimate analysis of oil, or computations based upon ASTM D3238–90 and either ASTM D2502–87 or ASTM D2503–82 (Reapproved 1987) for oil; and computations based on ASTM D1945–91 or ASTM D1946–90 for gas. Use daily fuel feed rates from company records for all fuels and the carbon content of the most recent fuel sample under this section to determine tons of carbon per day from combustion of each fuel. (All ASTM methods are incorporated by reference under §75.6). Where more than one fuel is combusted during a calendar day, calculate total tons of carbon for the day from all fuels.

2.2 For an affected coal-fired unit, the estimate of daily CO_2 mass emissions given by Equation G–1 may be adjusted to account for carbon retained in the ash using the procedures in either section 2.2.1 through 2.2.3 or section 2.2.4 of this appendix.

2.2.1 Determine the ash content of the weekly sample of coal using ASTM D3174–89 ''Standard Test Method for Ash in the Analysis Sample of Coal and Coke From Coal'' (incorporated by reference under §75.6 of this part).

2.2.2 Sample and analyze the carbon content of the fly-ash according to ASTM D3178–89, ''Standard Test Methods for Carbon and Hydrogen in the Analysis Sample of Coal and Coke'' (incorporated by reference under §75.6 of this part).

2.2.3 Discount the estimate of daily CO_2 mass emissions from the combustion of coal given by Equation G–1 by the percent carbon retained in the ash using the following equation:

$$W_{NCO2} = W_{CO2} - \left(\frac{MW_{CO2}}{MW_c}\right)\left(\frac{A\%}{100}\right)\left(\frac{C\%}{100}\right)W_{COAL}$$

where,

W_{NCO2} = Net CO_2 mass emissions discharged to the atmosphere, tons/day.

W_{CO2} = Daily CO_2 mass emissions calculated by Equation G–1, tons/day.

MW_{C02} = Molecular weight of carbon dioxide (44.0).

MW_c = Molecular weight of carbon (12.0).

A% = Ash content of the coal sample, percent by weight.

C% = Carbon content of ash, percent by weight.

W_{COAL} = Feed rate of coal from company records, tons/day.

2.2.4 The daily CO_2 mass emissions from combusting coal may be adjusted to account for carbon retained in the ash using the following equation:

W_{NCO2} = .99 W_{CO2}

(Eq. G–3)

where,

W_{NCO2} = Net CO_2 mass emissions from the combustion of coal discharged to the atmosphere, tons/day.

.99 = Average fraction of coal converted into CO_2 upon combustion.

W_{CO2} = Daily CO_2 mass emissions from the combustion of coal calculated by Equation G–1, tons/day.

2.3 In lieu of using the procedures, methods, and equations in section 2.1 of this appendix, the owner or operator of an affected gas-fired unit as defined under §72.2 of this chapter may use the following equation and records of hourly heat input to estimate hourly CO_2 mass emissions (in tons).

$$W_{CO_2} = \left(\frac{F_C \times H \times U_f \times MW_{CO_2}}{2000}\right) \qquad \text{(Eq. G–4)}$$

(Eq.G–4)

Where:

WCO_2=CO_2 emitted from combustion, tons/hr.

Fc=Carbon-based F-factor, 1,040 scf/mmBtu for natural gas; 1,420 scf/mm/btu for crude, residual, or distillate oil.

H = Hourly heat input in mmBtu, as calculated using the procedures in section 5 of appendix F of this part.

Uf=1/385 scf CO2/lb-mole at 14.7 psia and 68 °F.

3. Procedures for Estimating CO_2 Emissions From Sorbent

When the affected unit has a wet flue gas desulfurization system, is a fluidized bed boiler, or uses other emission controls with sorbent injection, use either a CO_2 continuous emission monitoring system or an O_2 monitor and a flow monitor, or use the procedures, methods, and equations in sections 3.1 through 3.2 of this appendix to determine daily CO_2 mass emissions from the sorbent (in tons).

3.1 When limestone is the sorbent material, use the equations and procedures in either section 3.1.1 or 3.1.2 of this appendix.

3.1.1 Use the following equation to estimate daily CO_2 mass emissions from sorbent (in tons).

$$SE_{CO_2} = W_{CaCO_3} F_u \frac{MW_{CO_2}}{MW_{CaCO_3}}$$

(Eq. G–5)

where,

SE_{CO2}=CO_2 emitted from sorbent, tons/day.

W_{CaCO3}=$CaCO_3$ used, tons/day.

F_u=1.00, the calcium to sulfur stoichiometric ratio.

MW_{CO2}=Molecular weight of carbon dioxide (44).

MW_{CaCO3}=Molecular weight of calcium carbonate (100).

3.1.2 In lieu of using Equation G–5, any owner or operator who operates and maintains a certified SO_2-diluent continuous emission monitoring system (consisting of an SO_2 pollutant concentration monitor and an O_2 or CO_2 diluent gas monitor), for measuring and recording SO_2 emission rate (in lb/mmBtu) at the outlet to the emission controls and who uses the applicable procedures, methods, and equations in §75.15 of this part to estimate the SO_2 emissions removal efficiency of the emission controls, may use the following equations to estimate daily CO_2 mass emissions from sorbent (in tons).

$$SE_{CO_2} = F_u \frac{W_{SO_2}}{2000} \frac{MW_{CO_2}}{MW_{SO_2}}$$

(Eq. G–6)

where,

SE_{CO2}=CO_2 emitted from sorbent, tons/day.

MW_{CO2}=Molecular weight of carbon dioxide (44).

MW_{SO2}=Molecular weight of sulfur dioxide (64).

W_{SO2}=Sulfur dioxide removed, lb/day, as calculated below using Eq. G–7.

F_u=1.0, the calcium to sulfur stoichiometric ratio.

and

$$W_{SO_2} = SO_{2o} \frac{\%R}{(100 - \%R)} \qquad \text{(Eq. G–7)}$$

(Eq. G–7)

where:

WSO_2=Weight of sulfur dioxide removed, lb/day.

SO_{20}=SO_2 mass emissions monitored at the outlet, lb/day, as calculated using the equations and procedures in section 2 of appendix F of this part.

%R=Overall percentage SO_2 emissions removal efficiency, calculated using Equations 1 through 7 in §75.15 using daily instead of annual average emission rates.

3.2 When a sorbent material other than limestone is used, modify the equations, methods, and procedures in Section 3.1 of this appendix as follows to estimate daily CO_2 mass emissions from sorbent (in tons).

3.2.1 Determine a site-specific value for F_u, defined as the ratio of the number of moles of CO_2 released upon capture of one mole of SO_2, using methods and procedures satisfactory to the Administrator. Use this value of F_u (instead of 1.0) in either Equation G–5 or Equation G–6.

3.2.2 When using Equation G–5, replace MW_{CaCO3}, the molecular weight of calcium carbonate, with the molecular weight of the sorbent material that participates in the reaction to capture SO_2 and that releases CO_2, and replace W_{CaCO3}, the amount of calcium carbonate used (in tons/day), with the amount of sorbent material used (in tons/day).

4. PROCEDURES FOR ESTIMATING TOTAL CO_2 EMISSIONS

When the affected unit has a wet flue gas desulfurization system, is a fluidized bed boiler, or uses other emission controls with sorbent injection, use the following equation to obtain total daily CO_2 mass emissions (in tons) as the sum of combustion-related emissions and sorbent-related emissions.

$$W_t = W_{CO2} + SE_{CO2}$$

(Eq. G–8)

where,

W_t=Estimated total CO_2 mass emissions, tons/day.

W_{CO2}=CO_2 emitted from fuel combustion, tons/day.

SE_{CO2}=CO_2 emitted from sorbent, tons/day.

[58 FR 3701, Jan. 11, 1993, as amended at 60 FR 26556-26557, May 17, 1995; 61 FR 25585, May 22, 1996]

APPENDIX H TO PART 75—REVISED TRACEABILITY PROTOCOL NO. 1

This appendix consists of section 3.0.4 of the Quality Assurance Handbook for Air Pollution Measurement Systems, Vol. 3, U.S. Environmental Protection Agency (revised 6/9/87). The Quality Assurance Handbook may be obtained from the Methods Research and Development Division, MD 78–A, Atmospheric Research Exposure and Assessment Laboratory, U.S. Environmental Protection Agency, Research Triangle Park, North Carolina 27711.

3.0.4. Procedure for NBS-Traceable Certification of Compressed Gas Working Standards Used for Calibration and Audit of Continuous Source Emission Monitors (Revised Traceability Protocol No. 1)

Contents

Subsection	*Title*
3.0.4.0	General Information
3.0.4.1	*Procedure G1:* Assay and Certification of a Compressed Gas Standard Without Dilution
3.0.4.2	References

4.0 General Information

4.0.1 Purpose and Scope of the Procedure

Section 3.0.4 describes a procedure for assaying the concentration of gaseous pollutant concentration standards and certifying that the assay concentrations are traceable to an authoritative reference concentration standard. This procedure is recommended for certifying the local working concentration standards required by the pollutant monitoring regulations of 40 CFR Part 60[1,2] for the calibration and audit of continuous source emission monitors. The procedure covers certification of compressed gas (cylinder) standards for CO, CO_2, NO, NO_2, and SO_2 (Procedure G1).

4.0.2 Reference Standards

Part 60 of the monitoring regulations [1,2] requires that working standards used for calibration and audit of continuous source emission monitors be traceable to either a National Bureau of Standards (NBS) gaseous Standard Reference Material (SRM or a NBS/EPA-approved Certified reference material (CRM) [3]. Accordingly, the reference standard used for assaying and certifying a working standard for these purposes must be an SRM, a CRM, or a suitable intermediate standard (see the next paragraph). SRM cylinder gas standards available from NBS are listed in Table 7.2 at the end of subsection 4.0. A current list of CRM cylinder gases and CRM vendors is available from the Quality Assurance Division (MD–77), Environmental Monitoring Systems Laboratory, U.S. EPA, Research Triangle Park, NC 27711.

The EPA regulations define a ''traceable'' standard as one which''. . . has been compared and certified, either directly or via not more than one intermediate standard, to a primary standard such as a . . . NBS [gaseous] SRM or . . . CRM''[4,5]. Certification of a working standard directly to an SRM or CRM primary standard is, of course, preferred and recommended because of the lower error. However, an intermediate reference standard is permitted, if necessary. In particular, a *Gas Manufacturer's Intermediate Standard* (see subsection 4.0.2.1) that has been referenced directly to an SRM or a CRM according to Procedure G1 is an acceptable intermediate standard and could be used as the reference standard on that basis. However, purchasers of commercial gas standards referenced to an intermediate standard such as a GMIS should be aware that, according to the above definition, such a standard would have to be used directly for calibration or audit. Since a second intermediate standard is not permitted, such a standard could not be used as a reference standard to certify other standards.

4.0.2.1 *Gas Manufacturer's Intermediate Standard (GMIS).* A GMIS is a compressed (cylinder) gas standard that has been assayed with direct reference to an SRM or CRM and certified according to Procedure G1, and also meets the following requirements:

1. A candidate GMIS must be assayed a minimum of three (3) times, uniformly spaced over a three (3) month period.

2. Each of the three (or more) assays must be within 1.0 percent of the mean of the three (or more) assays.

3. The difference between the last assay and the first assay must not exceed 1.5 percent of the mean of the three (or more) assays.

4. The GMIS must be recertified every three months, and the reassay must be within 1.5 percent of the previous certified assay. The recertified concentration of the GMIS is the mean of the previous certified concentration and the reassay concentration.

4.0.2.2 *Recertification of Reference Standards.* Recertification requirements for SRMs and CRMs are specified by NBS and NBS/EPA, respectively. See 4.0.2.1 for GMIS recertification requirements.

4.0.3 Using the Procedure

The assay/certification procedure described here is carefully designed to minimize both systematic and random errors in the assay process. Therefore, the procedure should be carried out as closely as possible to the way it is described. Similarly, the assay apparatus has been specifically designed to minimize errors and should be configured as closely as possible to the design specified. Good laboratory practice should be observed in the selection of inert materials (e.g. Teflon, stainless steel, or glass, if possible) and clean, non-contaminating components for use in portions of the apparatus in contact with the candidate or reference gas concentrations.

4.0.4 Certification Documentation

Each assay/certification must be documented in a written certification report signed by the analyst and containing at least the following information:

1. Identification number (cylinder number).
2. Certified concentration of the standard, in ppm or mole percent.
3. Balance gas in the standard mixture.
4. Cylinder pressure at certification.
5. Date of the assay/certification.
6. Certification expiration date (see 4.0.6.3).
7. Identification of the reference standard used: SRM number, cylinder number, and concentration for an SRM; cylinder number and concentration for a CRM or GMIS.
8. Statement that the assay/certification was performed according to this section 3.0.4.
9. Identification of the laboratory where the standard was certified and the analyst who performed the certification.
10. Identification of the gas analyzer used for the certification, including the make, model, serial number, the measurement principle, and the date of the last multipoint calibration.
11. All analyzer readings used during the assay/certification and the calculations used to obtain the reported certified value.
12. Chronological record of all certifications for the standard.

Certification concentrations should be reported to 3 significant digits. Certification documentation should be maintained for at least 3 years.

4.0.5 Certification Label

A label or tag bearing the information described in items 1 through 9 of subsection 4.0.4 must be attached to each certified gas cylinder.

4.0.6 Assay/Certification of Compressed Gas (Cylinder) Standards

4.0.6.1 *Aging of newly-prepared gas standards.* Freshly prepared gas standard concentrations and newly filled gas cylinders must be aged before being assayed and certified. SO_2 concentrations contained in steel cylinders must be aged at least 15 days; other standards must be aged at least 4 days.

4.0.6.2 *Stability test for reactive gas standards.* Reactive gas standards, including nitric oxide (NO), nitrogen dioxide (NO_2), sulfur dioxide (SO_2), and carbon monoxide (CO), that have not been previously certified must be tested for stability as follows: Reassay the concentration at least 7 days after the first assay and compare the two assays. If the second assay differs from the first assay by 1.5% or less, the cylinder may be considered stable, and the mean of the two assays should be reported as the certified concentration. Otherwise, age the cylinder for a week or more and repeat the test, using the second and third assays as if they were the first and second assays. Cylinders that are not stable may not be sold and/or used for calibration or audit purposes.

4.0.6.3 *Recertification of compressed gas standards.* Compressed gas standards must be recertified according to this section 3.0.4 within the time limits specified in Table 7.1[3,6,7]. The reassay concentration must be within 5% of the previous certified concentration. If not, the cylinder must be retested for stability (subsection 4.0.6.2). The certified concentration of a recertified standard should be reported as the mean of all assays, unless a clear trend or substantial change suggests that previous assays are no longer valid.

TABLE 7.1.—RECERTIFICATION LIMITS FOR COMPRESSED GAS STANDARDS

Pollutant	Balance gas [1]	Concentration range	Maximum months until recertification for cylinder material	
			Passivated Aluminum	Other
Carbon monoxide	N_2 or air	≥ 8 ppm	36	6

TABLE 7.1.—RECERTIFICATION LIMITS FOR COMPRESSED GAS STANDARDS—Continued

Pollutant	Balance gas [1]	Concentration range	Maximum months until recertification for cylinder material	
			Passivated Aluminum	Other
Nitric oxide	N_2	≥ 5 ppm	24	6
Sulfur dioxide	N_2 or air	50–499 ppm	24	6
Sulfur dioxide	N_2 or air	≥ 500 ppm	36	6
Oxides of nitrogen	Air	≥ 100 ppm	24	6
Nitrogen dioxide	Air	≥ 1000 ppm	24	6
Carbon dioxide	N_2 or air	≥ 300 ppm	36	18
Carbon dioxide and oxygen, (i.e. blood gas).	N_2	≥ 5% CO_2, ≥0% O_2	36	6
Oxygen	N_2	≥ 2 percent	36	18
Carbon dioxide and nitrous oxide	Air	≥ 300 ppm CO_2, ≥300 ppb N_2O	36	6
Others not specifically listed			6	6
Multicomponent mixtures	___	___	See [2]	6
Mixtures with lower concentrations.	___	___	See [3]	6

[1] When used as a balance gas, ''air'' is defined as a mixture of O_2 and N_2 where the minimum concentration of O_2 is 10% and the concentration of N_2 is greater than 60%.

[2] This protocol may be used to assay and certify individual components of multicomponent standards, provided that none of the components interferes with the analysis of other components and provided that individual components must not react with each other or with the balance gas. A multicomponent standard can be certified for a period of time equal to that of its most briefly certifiable component. For example, a standard containing 250 ppm sulfur dioxide and 100 ppm carbon monoxide in nitrogen can be certified for 24 months because the shortest certification period is 24 months.

[3] This protocol may be used for the certification of standards with concentrations that may be lower than those listed in Table 7.1. The initial certification period for such a lower concentration standard is 6 months. After this period, the standards may be recertified. If the recertification demonstrates that the standard is not unstable, the second certification period for this lower concentration standard is the same time period as indicated for the corresponding concentration standard listed in Table 7.1.

4.0.6.4 *Minimum cylinder pressure.* No compressed gas cylinder standard should be used when its gas pressure is below 700 kPa (100 psi), as indicated by the cylinder pressure gauge.

4.0.6.5 *Assay/certification of multi-component compressed gas standards.* Procedure G1 may be used to assay and certify individual components of multi-component gas standards, provided that none of the components other than the component being assayed cause a detectable response on the analyzer.

4.0.7 Analyzer Calibration

4.0.7.1 *Basic analyzer calibration requirements.* The assay procedure described in this section 3.0.4 employs a direct ratio referencing technique that inherently corrects for minor analyzer calibration variations (drift) and DOES NOT depend on the absolute accuracy of the analyzer calibration. What is required of the analyzer is as follows: 1) it must have a *linear* response to the pollutant of interest (see subsection 4.0.7.5), 2) it must have good resolution and low noise, 3) its response calibration must be reasonably stable during the assay/certification process, and 4) all assay concentration measurements must fall within the calibrated response range of the analyzer.

4.0.7.2 *Analyzer multipoint calibration.* The gas analyzer used for the assay/certification must have had a multipoint calibration within 3 months of its use when used with this procedure. This calibration is *not* used to quantitatively interpret analyzer readings during the assay/certification of the candidate gas because a more accurate, direct ratio comparison of the candidate concentration to the reference standard concentration is used. However, this multipoint calibration is necessary to establish the calibrated range of the analyzer and its response linearity.

The multipoint calibration should consist of analyzer responses to at least 5 concentrations, including zero, approximately evenly spaced over the concentration range. Analyzer response units may be volts, millivolts, percent of scale, or other measurable analyzer response units. The upper range limit of the calibrated range is determined by the highest calibration point used. If the analyzer has a choice of concentration ranges, the optimum range for the procedure should be selected and calibrated. Plot the calibration points and compute the linear regression slope and intercept. See subsection 4.0.7.5 for linearity requirements and the use of a mathematical transformation, if needed. The intercept should be less than 1 percent of the upper concentration range limit, and the correlation coefficient (r) should be at least 0.999.

4.0.7.3 *Zero and span check and adjustment.* On each day that the analyzer will be used for assay/certification, its response calibration must be checked with a zero and at least one span concentration near the upper concentration range limit. If necessary, the zero and span controls of the analyzer should be adjusted so that the analyzer's response

(i.e. calibration slope) is within about ±5 percent of the response indicated by the most recent multipoint calibration. If a zero or span adjustment is made, allow the analyzer to stabilize for at least an hour or more before beginning the assay procedure, since some analyzers drift for a period of time following zero or span adjustment. If the analyzer is not in continuous operation, turn it on and allow it to stabilize for at least 12 hours before the zero and span check.

4.0.7.4 *Pollutant standard for multipoint calibration and zero and span adjustment.* The pollutant standard or standards used for multipoint calibration or zero and span checks or adjustments must be obtained from a compressed gas standard certified traceable to an NBS SRM or a NBS/EPA CRM according to Procedure G1 of this section 3.0.4. This standard need not be the same as the reference standard used in the assay/certification. The zero gas must meet the requirements in subsection 4.0.8.

4.0.7.5 *Linearity of analyzer response.* The direct ratio assay technique used in Procedure G1 requires that the analyzer have a linear response to concentration. Linearity is determined by comparing the quantitative difference between a smoothly-drawn calibration curve based on all calibration points and a straight line drawn between zero and an upper reference point (see Figure 1). This difference is measured in concentration units, parallel to the concentration axis, from a point on the calibration curve to the corresponding point for the same response on the straight line.

For the general linearity requirement, the straight line is drawn between zero and the highest calibration point (Figure 1a). Linearity is then acceptable when no point on the smooth calibration curve deviates from the straight line by more than 1.5 percent of the value of the highest calibration concentration. An alternative linearity requirement is defined on the basis of the actual reference and candidate concentrations to be used for the assay. In this case, the reference and candidate concentrations are plotted on the calibration curve, and the straight line is drawn from zero to the reference concentration and extrapolated, if necessary, beyond the candidate concentration (Figure 1b). The deviation of the smooth calibration curve from the straight line at the candidate concentration point then must not exceed 0.8 percent of the value of the reference concentration. This latter specification may allow the use of an analyzer having greater nonlinearity when the reference and candidate concentrations are nearly the same.

For analyzers having an inherently nonlinear response, the response can usually be linearized with a simple mathematical transformation of the response values, such as R′=square root(R) or R′=log(R), where R′ is the transformed response value and R is the actual analyzer response value. Using the transformed response values, the multipoint calibration should meet one of the above linearity requirements as well as the requirements for intercept and correlation coefficient given in subsection 4.0.7.2.

4.0.8 Zero Gas

Zero gas used for dilution of any candidate or reference standard should be clean, dry, zero-grade air or nitrogen containing a concentration of the pollutant of interest equivalent to less than 0.5 percent of the analyzer's upper range limit concentration. The zero gas also should contain no contaminant that causes a detectable response on the analyzer or that suppresses or enhances the analyzer's response to the pollutant. The oxygen content of zero air should be the same as that of ambient air.

4.0.9 Accuracy Assessment of Commercially Available Standards

Periodically, the USEPA will assess the accuracy of commercially available compressed gas standards that have been assayed and certified according to this section 3.0.4. Accuracy will be assessed by EPA audit analysis of representative actual commercial standards obtained via an anonymous agent. The accuracy audit results, identifying the actual gas manufacturers or vendors, will be published as public information.

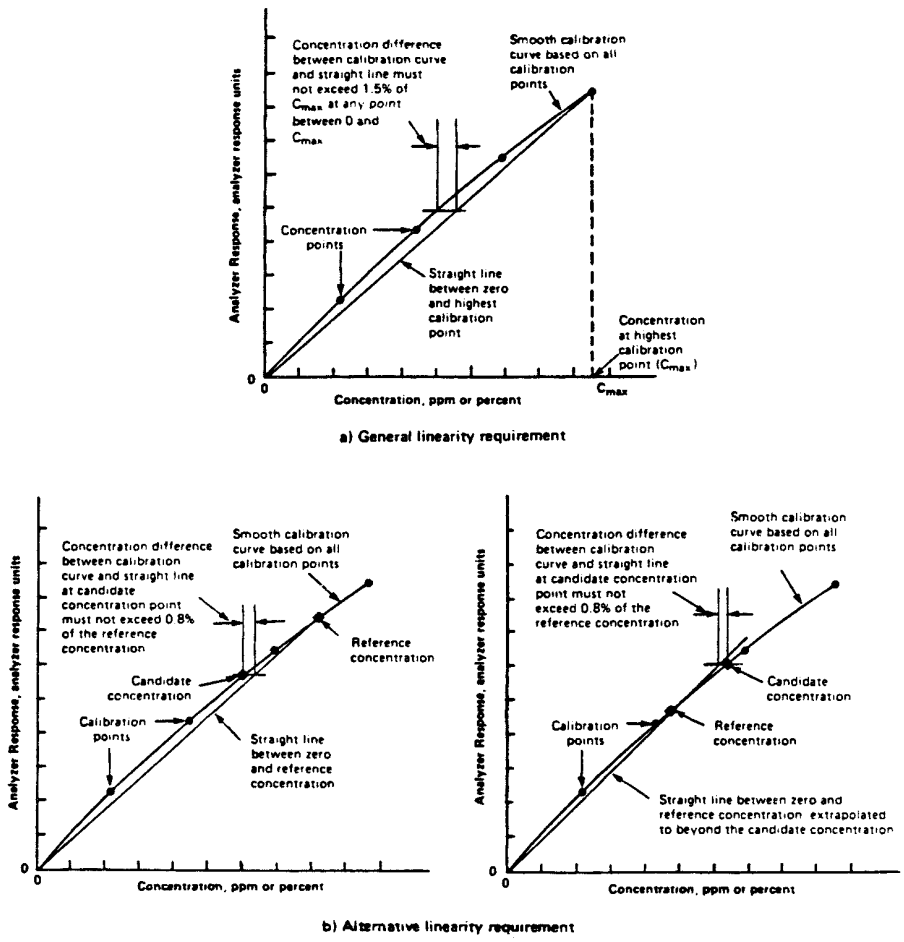

Figure 1. Illustration of linearity requirements.

TABLE 7.2.—NBS SRM REFERENCE GASES

SRM No.	Type	Nominal concentration
2627	NO/N_2	5 ppm.
2628	NO/N_2	10 ppm.
2629	NO/N_2	20 ppm.
1683b	NO/N_2	50 ppm.
1684b	NO/N_2	100 ppm.
1685b	NO/N_2	250 ppm.
1686b	NO/N_2	500 ppm.
1687b	NO/N_2	1000 ppm.
2630	NO/N_2	1500 ppm.
2631	NO/N_2	3000 ppm.
2653	NO/2Air	250 ppm.
2654	NO/2Air	500 ppm.
2655	NO/2Air	1000 ppm.
2656	NO/2Air	2500 ppm.
2612a	CO/Air	10 ppm.
2613a	CO/Air	20 ppm.
2614a	CO/Air	45 ppm.
1677c	CO/N_2	10 ppm.
2635	CO/N_2	25 ppm.
1678c	CO/N_2	50 ppm.
1679c	CO/N_2	100 ppm.
2636	CO/N_2	250 ppm.
1680c	CO/N_2	500 ppm.
1681c	CO/N_2	1000 ppm.
2637	CO/N_2	2500 ppm.
2638	CO/N_2	5000 ppm.
2639	CO/N_2	1 percent.
2640	CO/N_2	2 percent.
2641	CO/N_2	4 percent.
2642	CO/N_2	8 percent.
2657	O_2/N_2	2 percent.
2658	O_2/N_2	10 percent.
2659	O_2/N_2	21 percent.
1693	SO_2/N_2	50 ppm.
1694	SO_2/N_2	100 ppm.
1661a	SO_2/N_2	500 ppm.
1662a	SO_2/N_2	1000 ppm.
1663a	SO_2/N_2	1500 ppm.
1664a	SO_2/N_2	2500 ppm.
1696	SO_2/N_2	3500 ppm.
1670	CO_2/Air	330 ppm.
1671	CO_2/Air	340 ppm.
1672	CO_2/Air	350 ppm.
2632	CO_2/N_2	300 ppm.
2633	CO_2/N_2	400 ppm.
2634	CO_2/N_2	800 ppm.
2619a	CO_2/N_2	0.5 percent.
2720a	CO_2/N_2	1.0 percent.
2621a	CO_2/N_2	1.5 percent.
2622a	CO_2/N_2	2.0 percent.
2623a	CO_2/N_2	2.5 percent.
2624a	CO_2/N_2	3.0 percent.
2625a	CO_2/N_2	3.5 percent.
2626a	CO_2/N_2	4.0 percent.
1674b	CO_2/N_2	7.0 percent.
1675b	CO_2/N_2	14.0 percent.
1665b	C_3H_8/Air	3 ppm.
1666b	C_3H_8/Air	10 ppm.
1667b	C_3H_8/Air	50 ppm.
1668b	C_3H_8/Air	100 ppm.
1669b	C_3H_8/Air	500 ppm.
2643	C_3H_8/N_2	100 ppm.
2644	C_3H_8/N_2	250 ppm.
2645	C_3H_8/N_2	500 ppm.
2646	C_3H_8/N_2	1000 ppm.
2647	C_3H_8/N_2	2500 ppm.
2648	C_3H_8/N_2	5000 ppm.
2649	C_3H_8/N_2	1 percent.
2650	C_3H_8/N_2	2 percent.

NBS–SRM cylinders contain approximately 870 liters of gas at STP.

For availability, contact: Office of Standard Reference Materials, Chemistry Building, Room B311, NBS, Gaithersburg, Maryland 20899, (301) 975–6776. (FTS 879–6776).

4.1 *Procedure G1:* Assay and Certification of a Compressed Gas Standard Without Dilution

4.1.1 Applicability

This procedure may be used to assay the concentration of a candidate compressed gas (cylinder) pollutant standard, based on the concentration of a compressed gas (cylinder) reference standard of the same pollutant compound, and certify that the assayed concentration thus established for the candidate standard is traceable to the reference standard. The procedure employs a pollutant gas analyzer to compare the candidate and reference gas concentrations by direct measurement—without dilution of either gas—to minimize assay error.

4.1.2 Limitations

1. The concentration of the candidate gas standard must be between 0.3. and 1.3 times the concentration of the reference gas standard.
2. The analyzer must have a calibrated range capable of directly measuring both the candidate and the reference gas concentrations.
3. The analyzer's response (or transformed response) must be linear with respect to concentration.
4. The balance gas in both the candidate and reference standards must be identical, unless it can be shown that the analyzer is insensitive to any difference in the balance gases.
5. A source of clean, dry zero gas is required.

4.1.3 Assay Apparatus

Figure G1 illustrates the relatively simple assay apparatus. The configuration is designed to allow convenient routing of the zero gas and undiluted samples of the reference gas and candidate gases, in turn, to the analyzer for measurement, as selected by three-way valves V1 and V2. Pressure regulators and needle valves (V3 and V4) control the individual gas flows. The pollutant concentrations are delivered to the analyzer via a vented tee, which discharges excess flow and insures that the assay concentrations sampled by the analyzer are always at a fixed (atmospheric) pressure. A small, uncalibrated rotameter monitors the vent flow to verify that the total gas flow rate exceeds the sample flow rate demand of the analyzer so that no room air is admitted through the vent. Valves V1 and V2 could be replaced by a single four-way valve (with 3 inputs and 1 output) or by manually moving the output connection to each of the gases as needed. See also subsection 4.0.3.

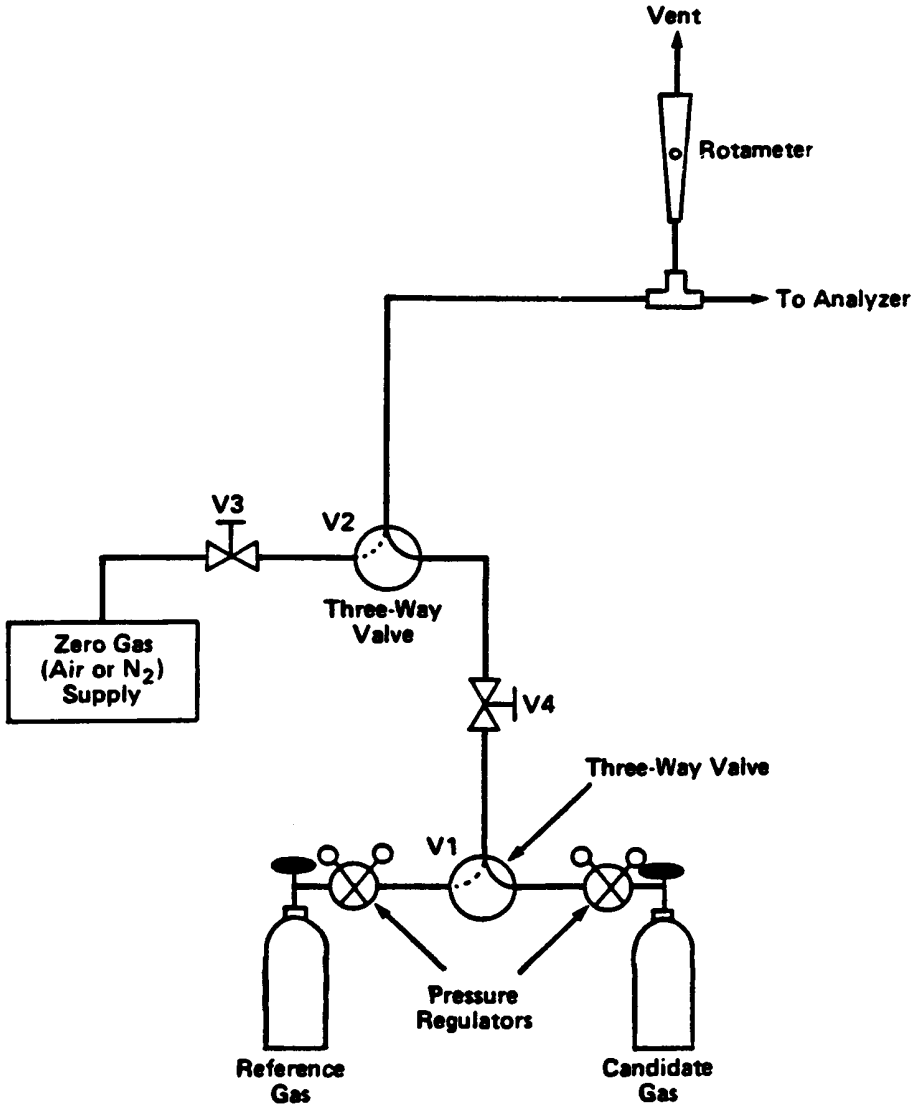
Vent
Rotameter
To Analyzer
V3
V2
Three-Way Valve
Zero Gas (Air or N_2) Supply
V4
Three-Way Valve
V1
Pressure Regulators
Reference Gas
Candidate Gas

4.1.4 Analyzer

See subsection 4.0.7.1. The pollutant gas analyzer must have a linear response function and a calibrated range capable of measuring the full concentration of both the candidate and the reference gas standards directly, without dilution. It must have good resolution (readability), good precision, a stable response, and low output signal noise. In addition, the analyzer must have good specificity for the pollutant of interest so that it has no detectable response to any contaminant that may be contained in either the candidate or reference gas. If the candidate and reference gases contain dissimilar balance gases (air versus nitrogen or different proportions of oxygen in the balance air, for example), the analyzer must be proven to be insensitive to the different balance gases. This may be accomplished by showing no difference in analyzer response when measuring pollutant concentrations diluted with identical flow rates of the two balance gases.

The analyzer should be connected to a suitable, precision chart recorder or other data acquisition device to facilitate graphical observation and documentation of the analyzer responses obtained during the assay.

4.1.5 Analyzer Calibration

4.1.5.1 *Multipoint calibration.* See subsections 4.0.7.2 and 4.0.7.4.

4.1.5.2 *Calibration range.* The calibrated range of the analyzer must include both the candidate and reference gas concentrations, such that the higher concentration does not exceed 97 percent of the upper range limit, and the lower concentration is not below 25 percent of the upper range limit (assuming a lower range limit of zero). Within these limits, select a calibrated analyzer range that will produce the highest analyzer responses.

4.1.5.3 *Linearity.* The direct ratio assay technique used in this procedure requires that the analyzer have a linear response to concentration (see subsection 4.0.7.5). High-concentration-range analyzers of the type that are required for this procedure may not be inherently linear, but they usually have a predictable, non-linear response characteristic that can be mathematically transformed to produce a sufficiently linear response characteristic suitable for use in this procedure. Any such response transformation should be verified by using it for the multipoint calibration. Caution should be exercised in using a transformed response curve because physical zero or span adjustments to the analyzer may produce unexpected effects on the transformed characteristic.

4.1.5.4 *Zero and span adjustment.* See subsections 4.0.7.3 and 4.0.7.4. Prior to carrying out the assay/certification procedure, check the calibration of the analyzer and, if necessary, adjust the analyzer's zero and span controls to reestablish the response characteristic determined at the most recent multipoint calibration. Allow the analyzer to stabilize for an hour or more after any zero or span adjustment. If there is any doubt that a transformed response characteristic is still linear following a zero or span adjustment, verify linearity with a multipoint calibration (subsection 4.0.7.2) using at least 3 known pollutant concentrations, including zero.

4.1.6 Assay Gases

4.1.6.1 *Candidate gas standard.* See subsections 4.0.6 and 4.1.2.

4.1.6.2 *Reference gas standard.* See subsections 4.0.2, 4.1.2, and 4.0.6.4. Select a reference standard such that the concentration of the candidate gas is not more than 30 percent above nor less than 70 percent below the concentration of the standard.

4.1.6.3 *Zero gas.* See subsection 4.0.8. The zero gas should match the balance gas used in the cylinder concentrations.

4.1.7 Assay Procedure

1. Verify that the assay apparatus is properly configured, as described in subsection 4.1.3 and shown in Figure G1.

2. Verify that the linearity of the analyzer has been checked within the last 3 months (see subsections 4.0.7.2, 4.0.7.5, and 4.1.4), that the zero and span are adjusted correctly (subsection 4.0.7.3), that the candidate and reference gas concentrations are within 25 and 97 percent of the upper range limit of the calibrated measurement range of the analyzer, and that the analyzer is operating stably.

3. Adjust the flow rates of the three gases (reference, candidate, and zero) to approximately the same value that will provide enough flow for the analyzer and sufficient excess to assure that no ambient air will be drawn into the vent.

4. Conduct a triad of measurements with the analyzer. Each triad consists of a measurement of the zero gas concentration, a measurement of the reference gas concentration, and a measurement of the candidate gas concentration. Use valves V1 and V2 to select each of the three concentrations for measurement. For each measurement, allow ample time for the analyzer to achieve a stable response reading. Record the stable analyzer response for each measurement, using the same response units (volt, millivolts, percent of scale, etc.) used for the multipoint calibration and any transformation of the response readings necessary for linearity. Do not translate the response readings to concentration values via the calibration curve (see the footnote following Equation G1). Do not make any zero, span, or other physical

adjustments to the analyzer during the triad of measurements.

5. Conduct at least 2 additional measurement triads, similar to step 4 above. However, for these subsequent triads, change the order of the three measurements (e.g. measure reference gas, zero gas, candidate gas for the second triad and zero gas, candidate gas, reference gas for the third triad, etc.).

6. If any one or more of the measurements of a triad is invalid or abnormal for any reason, discard all three measurements of the triad and repeat the triad.

7. For each triad of measurements, calculate the assay concentration of the candidate gas as follows:

$$C_c = C_r \frac{R_c - R_z}{R_r - R_z}$$

Equation G1

where:

C_c=Assay concentration of the candidate gas standard, ppm or percent;

C_r=Concentration of the reference gas standard, ppm or percent;

R_c=Stable response reading of the analyzer for the candidate gas, analyzer response units;*

R_z=Stable response reading of the analyzer for the zero gas, analyzer response units;*

R_r=Stable response reading of the analyzer for the reference gas, analyzer response units.*

*Analyzer response units are the units used to express the *direct* response readings of the analyzer, such as volts, millivolts, percent of scale, etc. DO NOT convert these direct response readings to concentration units with the multipoint calibration curve or otherwise adjust these readings except for transformation necessary to achieve response linearity.

8. Calculate the mean of the 3 (or more) valid assays. Calculate the percent difference of each assay from the mean. If any one of the assay values differs from the mean by more than 1.5%, discard that assay value and conduct another triad of measurements to obtain another assay value. When at least 3 assay values all agree within 1.5% of their mean, report the mean value as the certified concentration of the candidate gas standard. For newly-prepared reactive standards, a reassay at least 7 days later is required to check the stability of the standard; see subsection 4.0.6.2.

4.1.8 Stability Test for Newly-Prepared Standards

See subsections 4.0.6.1 and 4.0.6.2.

4.1.9 Certification Documentation

See subsections 4.0.4 and 4.0.5.

4.1.10 Recertification Requirements

See subsections 4.0.6.3 and 4.0.6.4.

4.2 References

1. Code of Federal Regulations, title 40, part 60, ''Standards of Performance for New Stationary Sources,'' appendix A, Method 20 (1982).

2. Standards of Performance for New Stationary Sources; Quality Assurance Requirements for Gaseous Continuous Emission Monitoring Systems Used for Compliance Determination, promulgated in the FEDERAL REGISTER, June 4, 1987, pp. 21003–21010.

3. ''A Procedure for Establishing Traceability of Gas Mixtures to Certain National Bureau of Standards Standard Reference Materials. EPA–600/7–81–010. Joint publication by NBS and EPA, May 1981. Available from the U.S. Environmental Protection Agency, Environmental Monitoring Systems Laboratory (MD–77), Research Triangle Park, NC 27711.

4. Code of Federal Regulation, title 40, part 50, ''National Ambient Air Quality Measurement Methodology''.

5. Code of Federal Regulations, title 40, part 58, ''Ambient Air Quality Surveillance,'' appendixes A and B.

6. Shores, R.C. and F. Smith, ''Stability Evaluation of Sulfur Dioxide, Nitric Oxide, and Carbon Monoxide Gases in Cylinders''. NTIS No. PB 85–122646. Available from the National Technical Information Service, 5285 Port Royal Road, Springfield, VA 22161.

7. Method 6A and 6B, ''Determination of Sulfur Dioxide, Moisture, and Carbon Dioxide Emissions from Fossil Fuel Combustion Sources,'' Quality Assurance Handbook for Air Pollution Measurement Systems, Volume III, Section 3.13.8, July 1986. Available from the U.S. Environmental Protection Agency, Center for Environmental Research Information, Cincinnati, OH 45268.

8. ''List of Designated Reference and Equivalent Methods.'' Current edition available from the U.S. Environmental Protection Agency, Environmental Monitoring Systems Laboratory, Quality Assurance Division (MD–77), Research Triangle Park, NC 27711.

[58 FR 3701, Jan. 11, 1993; 58 FR 40751, 40752, July 30, 1993]

APPENDIX I TO PART 75—OPTIONAL F—FACTOR/FUEL FLOW METHOD [RESERVED]

APPENDIX J TO PART 75—COMPLIANCE DATES FOR REVISED RECORDKEEPING REQUIREMENTS AND MISSING DATA PROCEDURES

1. *Recordkeeping Requirements*

The owner or operator shall meet the recordkeeping requirements of subpart F of this part by following either §§75.50, 75.51 and 75.52 or §§75.54, 75.55 and 75.56, from July 17, 1995 through December 31, 1995. On or after January 1, 1996, the owner or operator shall meet the recordkeeping requirements of subpart F of this part by meeting the requirements of §§75.54, 75.55, and 75.56.

2. *Missing Data Substitution Procedures*

The owner or operator shall meet the missing data substitution requirements for carbon dioxide (CO_2) and heat input by following either §§75.35 and 75.36 or sections 4.3.1 through 4.3.3, section 4.4.3 and sections 5.3 through 5.4 of appendix F of this part from July 17, 1995 through December 31, 1995. The owner or operator shall meet the missing data substitution requirements for fuel flowmeters in appendix D of this part by following either section 2.4.3.1 or sections 2.4.3.2 and 2.4.3.3 of appendix D of this part from July 17, 1995 through December 31, 1995. On or after January 1, 1996, the owner or operator shall meet the missing data substitution requirements for CO_2 concentration, that input and fuel flowmeters by meeting the requirements of §§75.35 and 75.36 and sections 2.4.3.2 through 2.4.3.3 of appendix D of this part.

[60 FR 26557, May 17, 1995]

PART 76—ACID RAIN NITROGEN OXIDES EMISSION REDUCTION PROGRAM

Sec.
76.1 Applicability.
76.2 Definitions.
76.3 General Acid Rain Program provisions.
76.4 Incorporation by reference.
76.5 NO_X emission limitations for Group 1 boilers.
76.6 NO_X emission limitations for Group 2 boilers. [Reserved]
76.7 Revised NO_X emission limitations for Group 1, Phase II boilers. [Reserved]
76.8 Early election for Group 1, Phase II boilers.
76.9 Permit application and compliance plans.
76.10 Alternative emission limitations.
76.11 Emissions averaging.
76.12 Phase I NO_X compliance extensions.
76.13 Compliance and excess emissions.
76.14 Monitoring, recordkeeping, and reporting.
76.15 Test methods and procedures.
76.16 [Reserved]

APPENDIX A TO PART 76—PHASE I AFFECTED COAL-FIRED UTILITY UNITS WITH GROUP 1 OR CELL BURNER BOILERS

APPENDIX B TO PART 76—PROCEDURES AND METHODS FOR ESTIMATING COSTS OF NITROGEN OXIDES CONTROLS APPLIED TO GROUP 1, PHASE I BOILERS

AUTHORITY: 42 U.S.C. 7601 and 7651 *et seq.*

SOURCE: 60 FR 18761, Apr. 13, 1995, unless otherwise noted.

§76.1 Applicability.

(a) Except as provided in paragraphs (b) through (d) of this section, the provisions apply to each coal-fired utility unit that is subject to an Acid Rain emissions limitation or reduction requirement for SO_2 under Phase I or Phase II pursuant to sections 404, 405, or 409 of the Act.

(b) The emission limitations for NO_X under this part apply to each affected coal-fired utility unit subject to section 404(d) or 409(b) of the Act on the date the unit is required to meet the Acid Rain emissions reduction requirement for SO_2.

(c) The provisions of this part apply to each coal-fired substitution unit or compensating unit, designated and approved as a Phase I unit pursuant to §72.41 or §72.43 of this chapter as follows:

(1) A coal-fired substitution unit that is designated in a substitution plan that is approved and active as of January 1, 1995 shall be treated as a Phase I coal-fired utility unit for purposes of this part. In the event the designation of such unit as a substitution unit is terminated after December 31, 1995, pursuant to §72.41 of this chapter and the unit is no longer required to meet Phase I SO_2 emissions limitations, the provisions of this part (including those applicable in Phase I) will continue to apply.

(2) A coal-fired substitution unit that is designated in a substitution plan that is not approved or not active as of January 1, 1995, or a coal-fired compensating unit, shall be treated as a Phase II coal-fired utility unit for purposes of this part.

(d) The provisions of this part for Phase I units apply to each coal-fired transfer unit governed by a Phase I extension plan, approved pursuant to § 72.42 of this chapter, on January 1, 1997. Notwithstanding the preceding sentence, a coal-fired transfer unit shall be subject to the Acid Rain emissions limitations for nitrogen oxides beginning on January 1, 1996 if, for that year, a transfer unit is allocated fewer Phase I extension reserve allowances than the maximum amount that the designated representative could have requested in accordance with § 72.42(c)(5) of this chapter (as adjusted under § 72.42(d) of this chapter) unless the transfer unit is the last unit allocated Phase I extension reserve allowances under the plan.

§ 76.2 Definitions.

All terms used in this part shall have the meaning set forth in the Act, in § 72.2 of this chapter, and in this section as follows:

Alternative contemporaneous annual emission limitation means the maximum allowable NO_X emission rate (on a lb/mmBtu, annual average basis) assigned to an individual unit in a NO_X emissions averaging plan pursuant to § 76.10.

Alternative technology means a control technology for reducing NO_X emissions that is outside the scope of the definition of low NO_X burner technology. Alternative technology does not include overfire air as applied to wall-fired boilers or separated overfire air as applied to tangentially fired boilers.

Approved clean coal technology demonstration project means a project using funds appropriated under the Department of Energy's ''Clean Coal Technology Demonstration Program,'' up to a total amount of $2,500,000,000 for commercial demonstration of clean coal technology, or similar projects funded through appropriations for the Environmental Protection Agency. The Federal contribution for a qualifying project shall be at least 20 percent of the total cost of the demonstration project.

Cell burner boiler means a wall-fired boiler that utilizes two or three circular burners combined into a single vertically oriented assembly that results in a compact, intense flame. Any low NO_X retrofit of a cell burner boiler that reuses the existing cell burner, close-coupled wall opening configuration would not change the designation of the unit as a cell burner boiler.

Coal-fired utility unit means a utility unit in which the combustion of coal (or any coal-derived fuel) on a Btu basis exceeds 50.0 percent of its annual heat input, for Phase I units in calendar year 1990 and, for Phase II units in the calendar year 1995. For the purposes of this part, this definition shall apply notwithstanding the definition at § 72.2 of this chapter.

Cyclone boiler means a boiler with one or more water-cooled horizontal cylindrical chambers in which coal combustion takes place. The horizontal cylindrical chamber(s) is (are) attached to the bottom of the furnace. One or more cylindrical chambers are arranged either on one furnace wall or on two opposed furnace walls. Gaseous combustion products exiting from the chamber(s) turn 90 degrees to go up through the boiler while coal ash exits the bottom of the boiler as a molten slag.

Demonstration period means a period of time not less than 15 months, approved under § 76.10, for demonstrating that the affected unit cannot meet the applicable emission limitation under § 76.5, 76.6, or 76.7 and establishing the minimum NO_X emission rate that the unit can achieve during long-term load dispatch operation.

Dry bottom means the boiler has a furnace bottom temperature below the ash melting point and the bottom ash is removed as a solid.

Economizer means the lowest temperature heat exchange section of a utility boiler where boiler feed water is heated by the flue gas.

Flue gas means the combustion products arising from the combustion of fossil fuel in a utility boiler.

Group 1 boiler means a tangentially fired boiler or a dry bottom wall-fired boiler (other than a unit applying cell burner technology).

Group 2 boiler means a wet bottom wall-fired boiler, a cyclone boiler, a boiler applying cell burner technology, a vertically fired boiler, an arch-fired

boiler, or any other type of utility boiler (such as a fluidized bed or stoker boiler) that is not a Group 1 boiler.

Low NO_X burners and *low NO_X burner technology* means commercially available combustion modification NO_X controls that minimize NO_X formation by introducing coal and its associated combustion air into a boiler such that initial combustion occurs in a manner that promotes rapid coal devolatilization in a fuel-rich (i.e., oxygen deficient) environment and introduces additional air to achieve a final fuel-lean (i.e., oxygen rich) environment to complete the combustion process. This definition shall include the staging of any portion of the combustion air using air nozzles or registers located inside any waterwall hole that includes a burner. This definition shall exclude the staging of any portion of the combustion air using air nozzles or ports located outside any waterwall hole that includes a burner (commonly referred to as NO_X ports or separated overfire air ports).

Operating period means a period of time of not less than three consecutive months and that occurs not more than one month prior to applying for an alternative emission limitation demonstration period under § 76.10, during which the owner or operator of an affected unit that cannot meet the applicable emission limitation:

(1) Operates the installed NO_X emission controls in accordance with primary vendor specifications and procedures, with the unit operating under normal conditions; and

(2) records and reports quality-assured continuous emission monitoring (CEM) and unit operating data according to the methods and procedures in part 75 of this chapter.

Primary vendor means the vendor of the NO_X emission control system who has primary responsibility for providing the equipment, service, and technical expertise necessary for detailed design, installation, and operation of the controls, including process data, mechanical drawings, operating manuals, or any combination thereof.

Reburning means reducing the coal and combustion air to the main burners and injecting a reburn fuel (such as gas or oil) to create a fuel-rich secondary combustion zone above the main burner zone and final combustion air to create a fuel-lean burnout zone. The formation of NO_X is inhibited in the main burner zone due to the reduced combustion intensity, and NO_X is destroyed in the fuel-rich secondary combustion zone by conversion to molecular nitrogen.

Selective catalytic reduction means a noncombustion control technology that destroys NO_X by injecting a reducing agent (e.g., ammonia) into the flue gas that, in the presence of a catalyst (e.g., vanadium, titanium, or zeolite), converts NO_X into molecular nitrogen and water.

Selective noncatalytic reduction means a noncombustion control technology that destroys NO_X by injecting a reducing agent (e.g., ammonia, urea, or cyanuric acid) into the flue gas, downstream of the combustion zone that converts NO_X to molecular nitrogen, water, and when urea or cyanuric acid are used, to carbon dioxide (CO_2).

Stoker boiler means a boiler that burns solid fuel in a bed, on a stationary or moving grate, that is located at the bottom of the furnace.

Tangentially fired boiler means a boiler that has coal and air nozzles mounted in each corner of the furnace where the vertical furnace walls meet. Both pulverized coal and air are directed from the furnace corners along a line tangential to a circle lying in a horizontal plane of the furnace.

Turbo-fired boiler means a pulverized coal, wall-fired boiler with burners arranged on walls so that the individual flames extend down toward the furnace bottom and then turn back up through the center of the furnace.

Wall-fired boiler means a boiler that has pulverized coal burners arranged on the walls of the furnace. The burners have discrete, individual flames that extend perpendicularly into the furnace area.

Wet bottom means the boiler has a furnace bottom temperature above the ash melting point and the bottom ash is removed as a liquid.

§ 76.3 General Acid Rain Program provisions.

The following provisions of part 72 of this chapter shall apply to this part:

(a) § 72.2 (Definitions);
(b) § 72.3 (Measurements, abbreviations, and acronyms);
(c) § 72.4 (Federal authority);
(d) § 72.5 (State authority);
(e) § 72.6 (Applicability);
(f) § 72.7 (New unit exemption);
(g) § 72.8 (Retired units exemption);
(h) § 72.9 (Standard requirements);
(i) § 72.10 (Availability of information); and
(j) § 72.11 (Computation of time).

In addition, the procedures for appeals of decisions of the Administrator under this part are contained in part 78 of this chapter.

§ 76.4 Incorporation by reference.

(a) The materials listed in this section are incorporated by reference in the sections noted. These incorporations by reference (IBR's) were approved by the Director of the Federal Register in accordance with 5 U.S.C. 552(a) and 1 CFR part 51. These materials are incorporated as they existed on the date of approval, and notice of any change in these materials will be published in the FEDERAL REGISTER. The materials are available for purchase at the corresponding address noted below and are available for inspection at the Office of the Federal Register, 800 North Capitol St., NW., 7th Floor, Suite 700, Washington, DC, at the Public Information Reference Unit, U.S. EPA, 401 M Street, SW., Washington, DC, and at the Library (MD–35), U.S. EPA, Research Triangle Park, North Carolina.

(b) The following materials are available for purchase from at least one of the following addresses: American Society for Testing and Materials (ASTM), 1916 Race Street, Philadelphia, Pennsylvania 19103; or the University Microfilms International, 300 North Zeeb Road, Ann Arbor, Michigan 48106.

(1) ASTM D 3176–89, Standard Practice for Ultimate Analysis of Coal and Coke, IBR approved May 23, 1995 for § 76.15.

(2) ASTM D 3172–89, Standard Practice for Proximate Analysis of Coal and Coke, IBR approved May 23, 1995 for § 76.15.

(c) The following material is available for purchase from the American Society of Mechanical Engineers (ASME), 22 Law Drive, Box 2350, Fairfield, NJ 07007–2350.

(1) ASME Performance Test Code 4.2 (1991), Test Code for Coal Pulverizers, IBR approved May 23, 1995 for § 76.15.

(2) [Reserved]

(d) The following material is available for purchase from the American National Standards Institute, 11 West 42nd Street, New York, NY 10036 or from the International Organization for Standardization (ISO), Case Postale 56, CH–1211 Geneve 20, Switzerland.

(1) ISO 9931 (December, 1991) ''Coal—Sampling of Pulverized Coal Conveyed by Gases in Direct Fired Coal Systems,'' IBR approved May 23, 1995 for § 76.15.

(2) [Reserved]

§ 76.5 NO_X emission limitations for Group 1 boilers.

(a) Beginning January 1, 1996, or for a unit subject to section 404(d) of the Act, the date on which the unit is required to meet Acid Rain emission reduction requirements for SO_2, the owner or operator of a Phase I coal-fired utility unit with a tangentially fired boiler or a dry bottom wall-fired boiler (other than units applying cell burner technology) shall not discharge, or allow to be discharged, emissions of NO_X to the atmosphere in excess of the following limits, except as provided in paragraphs (c) or (e) of this section or in § 76.10, 76.11, or 76.12:

(1) 0.45 lb/mmBtu of heat input on an annual average basis for tangentially fired boilers.

(2) 0.50 lb/mmBtu of heat input on an annual average basis for dry bottom wall-fired boilers (other than units applying cell burner technology).

(b) The owner or operator shall determine the annual average NO_X emission rate, in lb/mmBtu, using the methods and procedures specified in part 75 of this chapter.

(c) Unless the unit meets the early election requirement of § 76.8, the owner or operator of a coal-fired substitution unit with a tangentially fired boiler or a dry bottom wall-fired boiler (other than units applying cell burner technology) that satisfies the requirements of § 76.1(c)(2), shall comply with

the NO_X emission limitations that apply to Group 1, Phase II boilers.

(d) The owner or operator of a Phase I unit with a cell burner boiler that converts to a conventional wall-fired boiler on or before January 1, 1995 or, for a unit subject to section 404(d) of the Act, the date the unit is required to meet Acid Rain emissions reduction requirements for SO_2 shall comply, by such respective date or January 1, 1996, whichever is later, with the NO_X emissions limitation applicable to dry bottom wall-fired boilers under paragraph (a) of this section, except as provided in paragraphs (c) or (e) of this section or in § 76.10, 76.11, or 76.12.

(e) The owner or operator of a Phase I unit with a Group 1 boiler that converts to a fluidized bed or other type of utility boiler not included in Group 1 boilers on or before January 1, 1995 or, for a unit subject to section 404(d) of the Act, the date the unit is required to meet Acid Rain emissions reduction requirements for SO_2 is exempt from the NO_X emissions limitations specified in paragraph (a) of this section, but shall comply with the NO_X emission limitations for Group 2 boilers under § 76.6.

(f) Except as provided in § 76.8 and in paragraph (c) of this section, each unit subject to the requirements of this section is not subject to the requirements of § 76.7.

(g) Beginning January 1, 2000, the owner or operator of a Group 1, Phase II coal-fired utility unit with a tangentially fired boiler or a wall-fired boiler shall be subject to the emission limitations in paragraph (a) of this section.

§ 76.6 NO_X emission limitations for Group 2 boilers. [Reserved]

§ 76.7 Revised NO_X emission limitations for Group 1, Phase II boilers. [Reserved]

§ 76.8 Early election for Group 1, Phase II boilers.

(a) *General provisions.* (1) The owner or operator of a Phase II coal-fired utility unit with a Group 1 boiler may elect to have the unit become subject to the applicable emissions limitation for NO_X under § 76.5, starting no later than January 1, 1997.

(2) The owner or operator of a Phase II coal-fired utility unit with a Group 1 boiler that elects to become subject to the applicable emission limitation under § 76.5 shall not be subject to any revised NO_X emissions limitation for Group 1 boilers that the Administrator may issue pursuant to section 407(b)(2) of the Act until January 1, 2008, provided the designated representative demonstrates that the unit is in compliance with the limitation under § 76.5, using the methods and procedures specified in part 75 of this chapter, for the period beginning January 1 of the year in which the early election takes effect (but not later than January 1, 1997) and ending December 31, 2007.

(3) The owner or operator of any Phase II unit with a cell burner boiler that converts to conventional burner technology may elect to become subject to the applicable emissions limitation under § 76.5 for dry bottom wall-fired boilers, provided the owner or operator complies with the provisions in paragraph (a)(2) of this section.

(4) The owner or operator of a Phase II unit approved for early election shall not submit an application for an alternative emissions limitation demonstration period under § 76.10 until the earlier of:

(i) January 1, 2008; or

(ii) Early election is terminated pursuant to paragraph (e)(3) of this section.

(5) The owner or operator of a Phase II unit approved for early election may not incorporate the unit into an averaging plan prior to January 1, 2000. On or after January 1, 2000, for purposes of the averaging plan, the early election unit will be treated as subject to the applicable emissions limitation for NO_X for Phase II units with Group 1 boilers under § 76.5(g) and if revised emission limitations are issued for Group 1 boilers pursuant to section 407(b)(2) of the Act, § 76.7.

(b) *Submission requirements.* In order to obtain early election status, the designated representative of a Phase II unit with a Group 1 boiler shall submit an early election plan to the Administrator by January 1 of the year the early election is to take effect, but not

later than January 1, 1997. Notwithstanding § 72.40 of this chapter, and unless the unit is a substitution unit under § 72.41 of this chapter or a compensating unit under § 72.43 of this chapter, a complete compliance plan covering the unit shall not include the provisions for SO_2 emissions under § 72.40(a)(1) of this chapter.

(c) *Contents of an early election plan.* A complete early election plan shall include the following elements in a format prescribed by the Administrator:

(1) A request for early election;

(2) The first year for which early election is to take effect, but not later than 1997; and

(3) The special provisions under paragraph (e) of this section.

(d)(1) *Permitting authority's action.* To the extent the Administrator determines that an early election plan complies with the requirements of this section, the Administrator will approve the plan and:

(i) If a Phase I Acid Rain permit governing the source at which the unit is located has been issued, will revise the permit in accordance with the permit modification procedures in § 72.81 of this chapter to include the early election plan; or

(ii) If a Phase I Acid Rain permit governing the source at which the unit is located has not been issued, will issue a Phase I Acid Rain permit effective from January 1, 1995 through December 31, 1999, that will include the early election plan and a complete compliance plan under § 72.40(a) of this chapter and paragraph (b) of this section. If the early election plan is not effective until after January 1, 1995, the permit will not contain any NO_X emissions limitations until the effective date of the plan.

(2) Beginning January 1, 2000, the permitting authority will approve any early election plan previously approved by the Administrator during Phase I, unless the plan is terminated pursuant to paragraph (e)(3) of this section.

(e) *Special provisions*—(1) *Emissions limitations*—(i) *Sulfur dioxide.* Notwithstanding § 72.9 of this chapter, a unit that is governed by an approved early election plan and that is not a substitution unit under § 72.41 of this chapter or a compensating unit under § 72.43 of this chapter shall not be subject to the following standard requirements under § 72.9 of this chapter for Phase I:

(A) The permit requirements under §§ 72.9(a)(1) (i) and (ii) of this chapter;

(B) The sulfur dioxide requirements under § 72.9(c) of this chapter; and

(C) The excess emissions requirements under § 72.9(e)(1) of this chapter.

(ii) *Nitrogen oxides.* A unit that is governed by an approved early election plan shall be subject to an emissions limitation for NO_X as provided under paragraph (a)(2) of this section except as provided under paragraph (e)(3)(iii) of this section.

(2) *Liability.* The owners and operators of any unit governed by an approved early election plan shall be liable for any violation of the plan or this section at that unit. The owners and operators shall be liable, beginning January 1, 2000, for fulfilling the obligations specified in part 77 of this chapter.

(3) *Termination.* An approved early election plan shall be in effect only until the earlier of January 1, 2008 or January 1 of the calendar year for which a termination of the plan takes effect.

(i) If the designated representative of the unit under an approved early election plan fails to demonstrate compliance with the applicable emissions limitation under § 76.5 for any year during the period beginning January 1 of the first year the early election takes effect and ending December 31, 2007, the permitting authority will terminate the plan. The termination will take effect beginning January 1 of the year after the year for which there is a failure to demonstrate compliance, and the designated representative may not submit a new early election plan.

(ii) The designated representative of the unit under an approved early election plan may terminate the plan any year prior to 2008 but may not submit a new early election plan. In order to terminate the plan, the designated representative must submit a notice under § 72.40(d) of this chapter by January 1 of the year for which the termination is to take effect.

(iii)(A) If an early election plan is terminated any year prior to 2000, the unit shall meet, beginning January 1,

2000, the applicable emissions limitation for NO_X for Phase II units with Group 1 boilers under § 76.5(g) and, if revised emission limitations are issued pursuant to section 407(b)(2) of the Act, § 76.7.

(B) If an early election plan is terminated in or after 2000, the unit shall meet, beginning on the effective date of the termination, the applicable emissions limitation for NO_X for Phase II units with Group 1 boilers under § 76.5(g) and, if revised emission limitations are issued pursuant to section 407(b)(2) of the Act, § 76.7.

§ 76.9 Permit application and compliance plans.

(a) *Duty to apply*. (1) The designated representative of any source with an affected unit subject to this part shall submit, by the applicable deadline under paragraph (b) of this section, a complete Acid Rain permit application (or, if the unit is covered by an Acid Rain permit, a complete permit revision) that includes a complete compliance plan for NO_X emissions covering the unit.

(2) The original and three copies of the permit application and compliance plan for NO_X emissions for Phase I shall be submitted to the EPA regional office for the region where the applicable source is located. The original and three copies of the permit application and compliance plan for NO_X emissions for Phase II shall be submitted to the permitting authority.

(b) *Deadlines.* (1) For a Phase I unit with a Group 1 boiler, the designated representative shall submit a complete permit application and compliance plan for NO_X covering the unit during Phase I to the applicable permitting authority not later than May 6, 1994.

(2) For a Phase I or Phase II unit with a Group 2 boiler or a Phase II unit with a Group 1 boiler, the designated representative shall submit a complete permit application and compliance plan for NO_X emissions covering the unit in Phase II to the Administrator not later than January 1, 1998, except that early election units shall also submit an application not later than January 1, 1997.

(c) *Information requirements for NO_X* compliance plans. (1) In accordance with § 72.40(a)(2) of this chapter, a complete compliance plan for NO_X shall, for each affected unit included in the permit application and subject to this part, either certify that the unit will comply with the applicable emissions limitation under § 76.5, 76.6, or 76.7 or specify one or more other Acid Rain compliance options for NO_X in accordance with the requirements of this part. A complete compliance plan for NO_X for a source shall include the following elements in a format prescribed by the Administrator:

(i) Identification of the source;

(ii) Identification of each affected unit that is at the source and is subject to this part;

(iii) Identification of the boiler type of each unit;

(iv) Identification of the compliance option proposed for each unit (i.e., meeting the applicable emissions limitation under § 76.5, 76.6, 76.7, 76.8 (early election), 76.10 (alternative emission limitation), 76.11 (NO_X emissions averaging), or 76.12 (Phase I NO_X compliance extension)) and any additional information required for the appropriate option in accordance with this part;

(v) Reference to the standard requirements in § 72.9 of this chapter (consistent with § 76.8(e)(1)(i)); and

(vi) The requirements of §§ 72.21 (a) and (b) of this chapter.

(d) *Duty to reapply*. The designated representative of any source with an affected unit subject to this part shall submit a complete Acid Rain permit application, including a complete compliance plan for NO_X emissions covering the unit, in accordance with the deadlines in § 72.30(c) of this chapter.

§ 76.10 Alternative emission limitations.

(a) *General provisions.* (1) The designated representative of an affected unit that is not an early election unit pursuant to § 76.8 and cannot meet the applicable emission limitation in § 76.5, 76.6, or 76.7 using, for Group 1 boilers, either low NO_X burner technology or an alternative technology in accordance with paragraph (e)(11) of this section, or, for tangentially fired boilers, separated overfire air, or, for Group 2 boilers, the technology on which the applicable emission limitation is based may

petition the permitting authority for an alternative emission limitation less stringent than the applicable emission limitation.

(2) In order for the unit to qualify for an alternative emission limitation, the designated representative shall demonstrate that the affected unit cannot meet the applicable emission limitation in § 76.5, 76.6, or 76.7 based on a showing, to the satisfaction of the Administrator, that:

(i)(A) For a tangentially fired boiler, the owner or operator has either properly installed low NO_X burner technology or properly installed separated overfire air; or

(B) For a dry bottom wall-fired boiler (other than a unit applying cell burner technology), the owner or operator has properly installed low NO_X burner technology; or

(C) For a Group 1 boiler, the owner or operator has properly installed an alternative technology (including but not limited to reburning, selective noncatalytic reduction, or selective catalytic reduction) that achieves NO_X emission reductions demonstrated in accordance with paragraph (e)(11) of this section; or

(D) For a Group 2 boiler, the owner or operator has properly installed the appropriate NO_X emission control technology on which the applicable emission limitation in § 76.6 is based; and

(ii) The installed NO_X emission control system has been designed to meet the applicable emission limitation in § 76.5, 76.6, or 76.7; and

(iii) For a demonstration period of at least 15 months or other period of time, as provided in paragraph (f)(1) of this section:

(A) The NO_X emission control system has been properly installed and properly operated according to specifications and procedures designed to minimize the emissions of NO_X to the atmosphere;

(B) Unit operating data as specified in this section show that the unit and NO_X emission control system were operated in accordance with the bid and design specifications on which the design of the NO_X emission control system was based; and

(C) Unit operating data as specified in this section, continuous emission monitoring data obtained pursuant to part 75 of this chapter, and the test data specific to the NO_X emission control system show that the unit could not meet the applicable emission limitation in § 76.5, 76.6, or 76.7.

(b) *Petitioning process.* The petitioning process for an alternative emission limitation shall consist of the following steps:

(1) Operation during a period of at least 3 months, following the installation of the NO_X emission control system, that shows that the specific unit and the NO_X emission control system was unable to meet the applicable emissions limitation under § 76.5, 76.6, or 76.7 and was operated in accordance with the operating conditions upon which the design of the NO_X emission control system was based and with vendor specifications and procedures;

(2) Submission of a petition for an alternative emission limitation demonstration period as specified in paragraph (d) of this section;

(3) Operation during a demonstration period of at least 15 months, or other period of time as provided in paragraph (f)(1) of this section, that demonstrates the inability of the specific unit to meet the applicable emissions limitation under § 76.5, 76.6, or 76.7 and the minimum NO_X emissions rate that the specific unit can achieve during long-term load dispatch operation; and

(4) Submission of a petition for a final alternative emission limitation as specified in paragraph (e) of this section.

(c) *Deadlines*—(1) *Petition for an alternative emission limitation demonstration period.* The designated representative of the unit shall submit a petition for an alternative emission limitation demonstration period to the permitting authority after the unit has been operated for at least 3 months after installation of the NO_X emission control system required under paragraph (a)(2) of this section and by the following deadline:

(i) For units that seek to have an alternative emission limitation demonstration period apply during all or part of calendar year 1996, or any previous calendar year by the later of:

(A) 120 days after startup of the NO_X emission control system, or

(B) May 1, 1996.

(ii) For units that seek an alternative emission limitation demonstration period beginning in a calendar year after 1996, not later than:

(A) 120 days after January 1 of that calendar year, or

(B) 120 days after startup of the NO_X emission control system if the unit is not operating at the beginning of that calendar year.

(2) *Petition for a final alternative emission limitation.* Not later than 90 days after the end of an approved alternative emission limitation demonstration period for the unit, the designated representative of the unit may submit a petition for an alternative emission limitation to the permitting authority.

(3) *Renewal of an alternative emission limitation.* In order to request continuation of an alternative emission limitation, the designated representative must submit a petition to renew the alternative emission limitation on the date that the application for renewal of the source's Acid Rain permit containing the alternative emission limitation is due.

(d) *Contents of petition for an alternative emission limitation demonstration period.* The designated representative of an affected unit that has met the minimum criteria under paragraph (a) of this section and that has been operated for a period of at least 3 months following the installation of the required NO_X emission control system may submit to the permitting authority a petition for an alternative emission limitation demonstration period. In the petition, the designated representative shall provide the following information in a format prescribed by the Administrator:

(1) Identification of the unit;

(2) The type of NO_X control technology installed (e.g., low NO_X burner technology, selective noncatalytic reduction, selective catalytic reduction, reburning);

(3) If an alternative technology is installed, the time period (not less than 6 consecutive months) prior to installation of the technology to be used for the demonstration required in paragraph (e)(11) of this section.

(4) Documentation as set forth in § 76.14(a)(1) showing that the installed NO_X emission control system has been designed to meet the applicable emission limitation in § 76.5, 76.6, or 76.7 and that the system has been properly installed according to procedures and specifications designed to minimize the emissions of NO_X to the atmosphere;

(5) The date the unit commenced operation following the installation of the NO_X emission control system or the date the specific unit became subject to the emission limitations of § 76.5, 76.6, or 76.7, whichever is later;

(6) The dates of the operating period (which must be at least 3 months long);

(7) Certification by the designated representative that the owner(s) or operator operated the unit and the NO_X emission control system during the operating period in accordance with: Specifications and procedures designed to achieve the maximum NO_X reduction possible with the installed NO_X emission control system or the applicable emission limitation in § 76.5, 76.6, or 76.7; the operating conditions upon which the design of the NO_X emission control system was based; and vendor specifications and procedures;

(8) A brief statement describing the reason or reasons why the unit cannot achieve the applicable emission limitation in § 76.5, 76.6, or 76.7;

(9) A demonstration period plan, as set forth in § 76.14(a)(2);

(10) Unit operating data and quality-assured continuous emission monitoring data (including the specific data items listed in § 76.14(a)(3) collected in accordance with part 75 of this chapter during the operating period) and demonstrating the inability of the specific unit to meet the applicable emission limitation in § 76.5, 76.6, or 76.7 on an annual average basis while operating as certified under paragraph (d)(7) of this section;

(11) An interim alternative emission limitation, in lb/mmBtu, that the unit can achieve during a demonstration period of at least 15 months. The interim alternative emission limitation shall be derived from the data specified in paragraph (d)(10) of this section using methods and procedures satisfactory to the Administrator;

(12) The proposed dates of the demonstration period (which must be at least 15 months long);

(13) A report which outlines the testing and procedures to be taken during the demonstration period in order to determine the maximum NO_X emission reduction obtainable with the installed system. The report shall include the reasons for the NO_X emission control system's failure to meet the applicable emission limitation, and the tests and procedures that will be followed to optimize the NO_X emission control system's performance. Such tests and procedures may include those identified in § 76.15 as appropriate.

(14) The special provisions at paragraph (g)(1) of this section.

(e) *Contents of petition for a final alternative emission limitation.* After the approved demonstration period, the designated representative of the unit may petition the permitting authority for an alternative emission limitation. The petition shall include the following elements in a format prescribed by the Administrator:

(1) Identification of the unit;

(2) Certification that the owner(s) or operator operated the affected unit and the NO_X emission control system during the demonstration period in accordance with: specifications and procedures designed to achieve the maximum NO_X reduction possible with the installed NO_X emission control system or the applicable emissions limitation in § 76.5, 76.6, or 76.7; the operating conditions (including load dispatch conditions) upon which the design of the NO_X emission control system was based; and vendor specifications and procedures.

(3) Certification that the owner(s) or operator have installed in the affected unit all NO_X emission control systems, made any operational modifications, and completed any planned upgrades and/or maintenance to equipment specified in the approved demonstration period plan for optimizing NO_X emission reduction performance, consistent with the demonstration period plan and the proper operation of the installed NO_X emission control system. Such certification shall explain any differences between the installed NO_X emission control system and the equipment configuration described in the approved demonstration period plan.

(4) A clear description of each step or modification taken during the demonstration period to improve or optimize the performance of the installed NO_X emission control system.

(5) Engineering design calculations and drawings that show the technical specifications for installation of any additional operational or emission control modifications installed during the demonstration period.

(6) Unit operating and quality-assured continuous emission monitoring data (including the specific data listed in § 76.14(b)) collected in accordance with part 75 of this chapter during the demonstration period and demonstrating the inability of the specific unit to meet the applicable emission limitation in § 76.5, 76.6, or 76.7 on an annual average basis while operating in accordance with the certification under paragraph (e)(2) of this section.

(7) A report (based on the parametric test requirements set forth in the approved demonstration period plan as identified in paragraph (d)(13) of this section), that demonstrates the unit was operated in accordance with the operating conditions upon which the design of the NO_X emission control system was based and describes the reason or reasons for the failure of the installed NO_X emission control system to meet the applicable emission limitation in § 76.5, 76.6, or 76.7 on an annual average basis.

(8) The minimum NO_X emission rate, in lb/mmBtu, that the affected unit can achieve on an annual average basis with the installed NO_X emission control system. This value, which shall be the requested alternative emission limitation, shall be derived from the data specified in this section using methods and procedures satisfactory to the Administrator and shall be the lowest annual emission rate the unit can achieve with the installed NO_X emission control system;

(9) All supporting data and calculations documenting the determination of the requested alternative emission limitation and its conformance with the methods and procedures satisfactory to the Administrator;

(10) The special provisions in paragraph (g)(2) of this section.

(11) In addition to the other requirements of this section, the owner or operator of an affected unit with a Group 1 boiler that has installed an alternative technology in addition to or in lieu of low NO_X burner technology and cannot meet the applicable emission limitation in § 76.5 shall demonstrate, to the satisfaction of the Administrator, that the actual percentage reduction in NO_X emissions (lbs/mmBtu), on an annual average basis is greater than 65 percent of the average annual NO_X emissions prior to the installation of the NO_X emission control system. The percentage reduction in NO_X emissions shall be determined using continuous emissions monitoring data for NO_X taken during the time period (under paragraph (d)(3) of this section) prior to the installation of the NO_X emission control system and during long-term load dispatch operation of the specific boiler.

(f) *Permitting authority's action*—(1) *Alternative emission limitation demonstration period.* (i) The permitting authority may approve an alternative emission limitation demonstration period and demonstration period plan, provided that the requirements of this section are met to the satisfaction of the permitting authority. The permitting authority shall disapprove a demonstration period if the requirements of paragraph (a) of this section were not met during the operating period.

(ii) If the demonstration period is approved, the permitting authority will include, as part of the demonstration period, the 4 month period prior to submission of the application in the demonstration period.

(iii) The alternative emission limitation demonstration period will authorize the unit to emit at a rate not greater than the interim alternative emission limitation during the demonstration period on or after January 1, 1996 for Phase I units and the applicable date established in § 76.5(g) or 76.6 for Phase II units, and until the date that the Administrator approves or denies a final alternative emission limitation.

(iv) After an alternative emission limitation demonstration period is approved, if the designated representative requests an extension of the demonstration period in accordance with paragraph (g)(1)(i)(B) of this section, the permitting authority may extend the demonstration period by administrative amendment (under § 72.83 of this chapter) to the Acid Rain permit.

(v) The permitting authority shall deny the demonstration period if the designated representative cannot demonstrate that the unit met the requirements of paragraph (a)(2) of this section. In such cases, the permitting authority shall require that the owner or operator operate the unit in compliance with the applicable emission limitation in § 76.5, 76.6, or 76.7 for the period preceding the submission of the application for an alternative emission limitation demonstration period, including the operating period, if such periods are after the date on which the unit is subject to the standard limit under § 76.5, 76.6, or 76.7.

(2) *Alternative emission limitation.* (i) If the permitting authority determines that the requirements in this section are met, the permitting authority will approve an alternative emission limitation and issue or revise an Acid Rain permit to apply the approved limitation, in accordance with subparts F and G of part 72 of this chapter. The permit will authorize the unit to emit at a rate not greater than the approved alternative emission limitation, starting the date the permitting authority revises an Acid Rain permit to approve an alternative emission limitation.

(ii) If a permitting authority disapproves an alternative emission limitation under paragraph (a)(2) of this section, the owner or operator shall operate the affected unit in compliance with the applicable emission limitation in § 76.5, 76.6, or 76.7 (unless the unit is participating in an approved averaging plan under § 76.11) beginning on the date the permitting authority revises an Acid Rain permit to disapprove an alternative emission limitation.

(3) *Alternative emission limitation renewal.* (i) If, upon review of a petition to renew an approved alternative emission limitation, the permitting authority determines that no changes have been made to the control technology, its operation, the operating conditions on which the alternative emission limitation was based, or the actual NO_X

emission rate, the alternative emission limitation will be renewed.

(ii) If the permitting authority determines that changes have been made to the control technology, its operation, the fuel quality, or the operating conditions on which the alternative emission limitation was based, the designated representative shall submit, in order to renew the alternative emission limitation or to obtain a new alternative emission limitation, a petition for an alternative emission limitation demonstration period that meets the requirements of paragraph (d) of this section using a new demonstration period.

(g) *Special provisions*—(1) *Alternative emission limitation demonstration period*—(i) *Emission limitations.* (A) Each unit with an approved alternative emission limitation demonstration period shall comply with the interim emission limitation specified in the unit's permit beginning on the effective date of the demonstration period specified in the permit and, if a timely petition for a final alternative emission limitation is submitted, extending until the date on which the permitting authority issues or revises an Acid Rain permit to approve or disapprove an alternative emission limitation. If a timely petition is not submitted, then the unit shall comply with the standard emission limit under § 76.5, 76.6, or 76.7 beginning on the date the petition was required to be submitted under paragraph (c)(2) of this section.

(B) When the owner or operator identifies, during the demonstration period, boiler operating or NO_X emission control system modifications or upgrades that would produce further NO_X emission reductions, enabling the affected unit to comply with or bring its emission rate closer to the applicable emissions limitation under § 76.5, 76.6, or 76.7, the designated representative may submit a request and the permitting authority may grant, by administrative amendment under § 72.83 of this chapter, an extension of the demonstration period for such period of time (not to exceed 12 months) as may be necessary to implement such modifications or upgrades.

(C) If the approved interim alternative emission limitation applies to a unit for part, but not all, of a calendar year, the unit shall determine compliance for the calendar year in accordance with the procedures in § 76.13(a).

(ii) *Operating requirements.* (A) A unit with an approved alternative emission limitation demonstration period shall be operated under load dispatch conditions consistent with the operating conditions upon which the design of the NO_X emission control system and performance guarantee were based, and in accordance with the demonstration period plan.

(B) A unit with an approved alternative emission limitation demonstration period shall install all NO_X emission control systems, make any operational modifications, and complete any upgrades and maintenance to equipment specified in the approved demonstration period plan for optimizing NO_X emission reduction performance.

(C) When the owner or operator identifies boiler or NO_X emission control system operating modifications that would produce higher NO_X emission reductions, enabling the affected unit to comply with, or bring its emission rate closer to, the applicable emission limitation under § 76.5, 76.6, or 76.7, the designated representative shall submit an administrative amendment under § 72.83 of this chapter to revise the unit's Acid Rain permit and demonstration period plan to include such modifications.

(iii) *Testing requirements.* A unit with an approved alternative emission limitation demonstration period shall monitor in accordance with part 75 of this chapter and shall conduct all tests required under the approved demonstration period plan.

(2) *Final alternative emission limitation*—(i) *Emission limitations.* (A) Each unit with an approved alternative emission limitation shall comply with the alternative emission limitation specified in the unit's permit beginning on the date specified in the permit as issued or revised by the permitting authority to apply the final alternative emission limitation.

(B) If the approved interim or final alternative emission limitation applies to a unit for part, but not all, of a calendar year, the unit shall determine

compliance for the calendar year in accordance with the procedures in § 76.13(a).

§ 76.11 Emissions averaging.

(a) *General provisions.* In lieu of complying with the applicable emission limitation in § 76.5, 76.6, or 76.7, any affected units subject to such emission limitation, under control of the same owner or operator, and having the same designated representative may average their NO_X emissions under an averaging plan approved under this section.

(1) Each affected unit included in an averaging plan for Phase I shall be a Phase I unit with a Group 1 boiler subject to an emission limitation in § 76.5 during all years for which the unit is included in the plan.

(i) If a unit with an approved NO_X compliance extension is included in an averaging plan for 1996, the unit shall be treated, for the purposes of applying Equation 1 in paragraph (a)(6) of this section and Equation 2 in paragraph (d)(1)(ii)(A) of this section, as subject to the applicable emissions limitation under § 76.5 for the entire year 1996.

(ii) A Phase II unit approved for early election under § 76.8 shall not be included in an averaging plan for Phase I.

(2) Each affected unit included in an averaging plan for Phase II shall be a boiler subject to an emission limitation in § 76.5, 76.6, or 76.7 for all years for which the unit is included in the plan.

(3) Each unit included in an averaging plan shall have an alternative contemporaneous annual emission limitation (lb/mmBtu) and can only be included in one averaging plan.

(4) Each unit included in an averaging plan shall have a minimum allowable annual heat input value (mmBtu), if it has an alternative contemporaneous annual emission limitation more stringent than that unit's applicable emission limitation under § 76.5, 76.6, or 76.7, and a maximum allowable annual heat input value, if it has an alternative contemporaneous annual emission limitation less stringent than that unit's applicable emission limitation under § 76.5, 76.6, or 76.7.

(5) The Btu-weighted annual average emission rate for the units in an averaging plan shall be less than or equal to the Btu-weighted annual average emission rate for the same units had they each been operated, during the same period of time, in compliance with the applicable emission limitations in § 76.5, 76.6, or 76.7.

(6) In order to demonstrate that the proposed plan is consistent with paragraph (a)(5) of this section, the alternative contemporaneous annual emission limitations and annual heat input values assigned to the units in the proposed averaging plan shall meet the following requirement:

$$\frac{\sum_{i=1}^{n}\left(R_{Li} \times HI_i\right)}{\sum_{i=1}^{n} HI_i} \leq \frac{\sum_{i=1}^{n}\left(R_{li} \times HI_i\right)}{\sum_{i=1}^{n} HI_i} \qquad \text{(Equation 1)}$$

Where:

R_{Li} = Alternative contemporaneous annual emission limitation for unit i, lb/mmBtu, as specified in the averaging plan;

R_{li} = Applicable emission limitation for unit i, lb/mmBtu, as specified in § 76.5, 76.6, or 76.7 except that for early election units, which may be included in an averaging plan only on or after January 1, 2000, R_{li} shall equal the most stringent applicable emission limitation under § 76.5 or 76.7;

HI_i = Annual heat input for unit i, mmBtu, as specified in the averaging plan;

n = Number of units in the averaging plan.

(7) For units with an alternative emission limitation, R_{li} shall equal the applicable emissions limitation under § 76.5, 76.6, or 76.7, not the alternative emissions limitation.

(8) No unit may be included in more than one averaging plan.

(b)(1) *Submission requirements.* The designated representative of a unit meeting the requirements of paragraphs (a)(1), (a)(2), and (a)(8) of this section may submit an averaging plan (or a revision to an approved averaging plan) to the permitting authority(ies) at any time up to and including January 1 (or July 1, if the plan is restricted to units located within a single permitting authority's jurisdiction) of the calendar year for which the averaging plan is to become effective.

(2) The designated representative shall submit a copy of the same averaging plan (or the same revision to an approved averaging plan) to each permitting authority with jurisdiction over a unit in the plan.

(3) When an averaging plan (or a revision to an approved averaging plan) is not approved, the owner or operator of each unit in the plan shall operate the unit in compliance with the emission limitation that would apply in the absence of the averaging plan (or revision to a plan).

(c) *Contents of NO_X averaging plan.* A complete NO_X averaging plan shall include the following elements in a format prescribed by the Administrator:

(1) Identification of each unit in the plan;

(2) Each unit's applicable emission limitation in § 76.5, 76.6, or 76.7;

(3) The alternative contemporaneous annual emission limitation for each unit (in lb/mmBtu). If any of the units identified in the NO_X averaging plan utilize a common stack pursuant to § 75.17(a)(2)(i)(B) of this chapter, the same alternative contemporaneous emission limitation shall be assigned to each such unit and different heat input limits may be assigned;

(4) The annual heat input limit for each unit (in mmBtu);

(5) The calculation for Equation 1 in paragraph (a)(6) of this section;

(6) The calendar years for which the plan will be in effect; and

(7) The special provisions in paragraph (d)(1) of this section.

(d) *Special provisions.—(1) Emission limitations.* Each affected unit in an approved averaging plan is in compliance with the Acid Rain emission limitation for NO_X under the plan only if the following requirements are met:

(i) For each unit, the unit's actual annual average emission rate for the calendar year, in lb/mmBtu, is less than or equal to its alternative contemporaneous annual emission limitation in the averaging plan; and

(A) For each unit with an alternative contemporaneous emission limitation less stringent than the applicable emission limitation in § 76.5, 76.6, or 76.7, the actual annual heat input for the calendar year does not exceed the annual heat input limit in the averaging plan;

(B) For each unit with an alternative contemporaneous annual emission limitation more stringent than the applicable emission limitation in § 76.5, 76.6, or 76.7, the actual annual heat input for the calendar year is not less than the annual heat input limit in the averaging plan; or

(ii) If one or more of the units does not meet the requirements under paragraph (d)(1)(i) of this section, the designated representative shall demonstrate, in accordance with paragraph (d)(1)(ii)(A) of this section (Equation 2) that the actual Btu-weighted annual average emission rate for the units in the plan is less than or equal to the Btu-weighted annual average rate for the same units had they each been operated, during the same period of time, in compliance with the applicable emission limitations in § 76.5, 76.6, or 76.7.

(A) A group showing of compliance shall be made based on the following equation:

$$\frac{\sum_{i=1}^{n}\left(R_{ai} \times HI_{ai}\right)}{\sum_{i=1}^{n} HI_{ai}} \leq \frac{\sum_{i=1}^{n}\left(R_{li} \times HI_{ai}\right)}{\sum_{i=1}^{n} HI_{ai}} \qquad \text{(Equation 2)}$$

Where:

R_{ai} = Actual annual average emission rate for unit i, lb/mmBtu, as determined using the procedures in part 75 of this chapter. For units in an averaging plan utilizing a common stack pursuant to § 75.17(a)(2)(i)(B) of this chapter, use the same NO_X emission rate value for each unit utilizing the common stack, and calculate this value in accordance with appendix F to part 75 of this chapter;

R_{li} = Applicable annual emission limitation for unit i lb/mmBtu, as specified in § 76.5, 76.6, or 76.7, except that for early election units, which may be included in an averaging plan only on or after January 1, 2000, R_{li} shall equal the most stringent applicable emission limitation under § 76.5 or 76.7;

HI_{ai} = Actual annual heat input for unit i, mmBtu, as determined using the procedures in part 75 of this chapter;

n = Number of units in the averaging plan.

(B) For units with an alternative emission limitation, R_{li} shall equal the applicable emission limitation under § 76.5, 76.6, or 76.7, not the alternative emission limitation.

(C) If there is a successful group showing of compliance under paragraph (d)(1)(ii)(A) of this section for a calendar year, then all units in the averaging plan shall be deemed to be in compliance for that year with their alternative contemporaneous emission limitations and annual heat input limits under paragraph (d)(1)(i) of this section.

(2) *Liability*. The owners and operators of a unit governed by an approved averaging plan shall be liable for any violation of the plan or this section at that unit or any other unit in the plan, including liability for fulfilling the obligations specified in part 77 of this chapter and sections 113 and 411 of the Act.

(3) *Withdrawal or termination*. The designated representative may submit a notification to terminate an approved averaging plan in accordance with § 72.40(d) of this chapter, no later than October 1 of the calendar year for which the plan is to be withdrawn or terminated.

§ 76.12 Phase I NO_X compliance extension.

(a) *General provisions*. (1) The designated representative of a Phase I unit with a Group 1 boiler may apply for and receive a 15-month extension of the deadline for meeting the applicable emissions limitation under § 76.5 where it is demonstrated, to the satisfaction of the Administrator, that:

(i) The low NO_X burner technology designed to meet the applicable emission limitation is not in adequate supply to enable installation and operation at the unit, consistent with system reliability, by January 1, 1995 and the reliability problems are due substantially to NO_X emission control system installation and availability; or

(ii) The unit is participating in an approved clean coal technology demonstration project.

(2) In order to obtain a Phase I NO_X compliance extension, the designated representative shall submit a Phase I NO_X compliance extension plan by October 1, 1994.

(b) *Contents of Phase I NO_X compliance extension plan*. A complete Phase I NO_X compliance extension plan shall include the following elements in a format prescribed by the Administrator:

(1) Identification of the unit.

(2) For units applying pursuant to paragraph (a)(1)(i) of this section:

(i) A list of the company names, addresses, and telephone numbers of vendors who are qualified to provide the

services and low NO_X burner technology designed to meet the applicable emission limitation under § 76.5 and have been contacted to obtain the required services and technology. The list shall include the dates of contact, and a copy of each request for bids shall be submitted, along with any other information necessary to show a good-faith effort to obtain the required services and technology necessary to meet the requirements of this part on or before January 1, 1995.

(ii) A copy of those portions of a legally binding contract with a qualified vendor that demonstrate that services and low NO_X burner technology designed to meet the applicable emission limitation under § 76.5, with a completion date not later than December 31, 1995 have been contracted for.

(iii) Scheduling information, including justification and test schedules.

(iv) To demonstrate, if applicable, that the supply of the low NO_X burner technology designed to meet the applicable emission limitation under § 76.5 is inadequate to enable its installation and operation at the unit, consistent with system reliability, in time for the unit to comply with the applicable emission limitation on or before January 1, 1995, either:

(A) Certification from the selected vendor(s) (by a certifying official) listed in paragraph (b)(2)(i) of this section stating that they cannot provide the necessary services and install the low NO_X burner technology on or before January 1, 1995 and explaining the reasons why the services cannot be provided and why the equipment cannot be installed in a timely manner; or

(B) The following information:

(i) Standard load forecasts, based on standard forecasting models available throughout the utility industry and applied to the period, January 1, 1993, through December 31, 1994.

(ii) Specific reasons why an outage cannot be scheduled to enable the unit to install and operate the low NO_X burner technology by January 1, 1995, including reasons why no other units can be used to replace this unit's generation during such outage.

(iii) Fuel and energy balance summaries and power and other consumption requirements (including those for air, steam, and cooling water).

(3) To demonstrate, if applicable, participation in an approved clean coal technology demonstration project, a description of the project, including all sources of federal, State, and other outside funding, amount and date for approval of federal funding, the duration of the project, and the anticipated completion date of the project.

(4) The special provisions in paragraph (d) of this section.

(c)(1) *Administrator's action.* To the extent the Administrator determines that a Phase I NO_X compliance extension plan complies with the requirements of this section, the Administrator will approve the plan and revise the Acid Rain permit governing the unit in the plan in order to incorporate the plan by administrative amendment under § 72.83 of this chapter, except that the Administrator shall have 90 days from receipt of the compliance extension plan to take final action.

(2) The Administrator will approve or disapprove a proposed NO_X compliance extension plan within 3 months of receipt.

(d) *Special provisions.* (1) Emission limitations. The unit shall comply with the applicable emission limitation under § 76.5 beginning April 1, 1996. Compliance shall be determined as specified in part 75 of this chapter using measured values of NO_X emissions and heat input only for the portion of the year that the emission limit is in effect.

(2) If a unit with an approved NO_X compliance extension is included in an averaging plan under § 76.11 for year 1996, the unit shall be treated, for purposes of applying Equation 1 in § 76.11(a)(6) and Equation 2 in § 76.11(d)(1)(ii)(A), as subject to the applicable emission limitation under § 76.5 for the entire year 1996.

(e) *Extension until December 31, 1997.* (1) The designated representative of a Phase I unit that is subject to section 404(d) of the Act, has a tangentially fired boiler, and is unable to install low NO_X burner technology by January 1, 1997 may submit a petition for and receive an extension for meeting the applicable emission limitation under

§ 76.5 where it is demonstrated, to the satisfaction of the Administrator, that:

(i) The unit is located at a source with two or more other units, all of which are Phase I units that are subject to section 404(d) of the Act and have tangentially fired boilers;

(ii) The NO_X control system at the unit was scheduled to be installed by January 1, 1997 and, because of operational problems associated with the NO_X control system, will be redesigned; and

(iii) Installation of the redesigned low NO_X burner technology at the unit cannot be completed by January 1, 1997 without causing system reliability problems.

(2) A complete petition shall include the following elements and shall be submitted by April 28, 1995.

(i) Identification of the unit and the other units at the source;

(ii) A statement describing how the requirements of paragraphs (e)(1)(ii) and (e)(1)(iii) of this section are met;

(iii) The earliest date, not later than December 31, 1997, by which installation of the redesigned low NO_X burner technology can be completed consistent with system reliability; and

(iv) The provisions in paragraph (e)(4) of this section.

(3) To the extent the Administrator determines that a Phase I unit meets the requirements of paragraphs (e)(1) and (e)(2) of this section, the Administrator will approve the petition within 90 days from receipt of the complete petition. The Acid Rain permit governing the unit will be revised in order to incorporate the approved extension, which shall terminate no later than December 31, 1997, by administrative amendment under § 72.83 of this chapter except that the Administrator will have 90 days to take final action.

(4) The unit shall comply with the applicable emission limitation under § 76.5 beginning on the day immediately following the day on which the extension approved under paragraph (e)(3) of this section terminates. Compliance shall be determined as specified in part 75 of this chapter using measured values of NO_X emissions and heat input only for the portion of the year that the emission limit is in effect. If a unit with an approved extension is included in an averaging plan under § 76.11 for year 1997, the unit shall be treated, for the purpose of applying Equation 1 in § 76.11(a)(6) and Equation 2 in § 76.11(d)(1)(ii)(A), as subject to the applicable emission limitation under § 76.5 for the entire year 1997.

§ 76.13 Compliance and excess emissions.

Excess emissions of nitrogen oxides under § 77.6 of this chapter shall be calculated as follows:

(a) For a unit that is not in an approved averaging plan:

(1) Calculate EE_i for each portion of the calendar year that the unit is subject to a different NO_X emission limitation:

$$EE_i = \frac{(R_{ai} - R_{li}) \times HI_i}{2000} \qquad \text{(Equation 3)}$$

Where:

EE_i = Excess emissions for NO_X for the portion of the calendar year (in tons);

R_{ai} = Actual average emission rate for the unit (in lb/mmBtu), determined according to part 75 of this chapter for the portion of the calendar year for which the applicable emission limitation R_l is in effect;

R_{li} = Applicable emission limitation for the unit, (in lb/mmBtu), as specified in § 76.5, 76.6, or 76.7 or as determined under § 76.10;

$$EE = \sum_{i=1}^{n} EE_i \qquad \text{(Equation 4)}$$

HI^i = Actual heat input for the unit, (in mmBtu), determined according to part 75 of this chapter for the portion of the calendar year for which the applicable emission limitation, R_l, is in effect.

(2) If EE_i is a negative number for any portion of the calendar year, the EE value for that portion of the calendar year shall be equal to zero (e.g., if $EE_i = -100$, then $EE_i = 0$).

(3) Sum all EE_i values for the calendar year:

Where:

EE = Excess emissions for NO_X for the year (in tons);

n = The number of time periods during which a unit is subject to different emission limitations; and

(b) For units participating in an approved averaging plan, when all the requirements under § 76.11(d)(1) are not met,

$$EE = \frac{\sum_{i=1}^{n}\left(R_{ai} \times HI_i\right) - \sum_{i=1}^{n}\left(R_{li} \times HI_i\right)}{2000} \qquad \text{(Equation 5)}$$

Where:

EE = Excess emissions for NO_X for the year (in tons);

R_{ai} = Actual annual average emission rate for NO_X for unit i, (in lb/mmBtu), determined according to part 75 of this chapter;

R_{li} = Applicable emission limitation for unit i, (in lb/mmBtu), as specified in § 76.5, 76.6, or 76.7;

HI_i = Actual annual heat input for unit i, mmBtu, determined according to part 75 of this chapter;

n = Number of units in the averaging plan.

§ 76.14 Monitoring, recordkeeping, and reporting.

(a) A petition for an alternative emission limitation demonstration period under § 76.10(d) shall include the following information:

(1) In accordance with § 76.10(d)(4), the following information:

(i) Documentation that the owner or operator solicited bids for a NO_X emission control system designed for application to the specific boiler and designed to achieve the applicable emission limitation in § 76.5, 76.6, or 76.7 on an annual average basis. This documentation must include a copy of all bid specifications.

(ii) A copy of the performance guarantee submitted by the vendor of the installed NO_X emission control system to the owner or operator showing that such system was designed to meet the applicable emission limitation in § 76.5, 76.6, or 76.7 on an annual average basis.

(iii) Documentation describing the operational and combustion conditions that are the basis of the performance guarantee.

(iv) Certification by the primary vendor of the NO_X emission control system that such equipment and associated auxiliary equipment was properly installed according to the modifications and procedures specified by the vendor.

(v) Certification by the designated representative that the owner(s) or operator installed technology that meets the requirements of § 76.10(a)(2).

(2) In accordance with § 76.10(d)(9), the following information:

(i) The operating conditions of the NO_X emission control system including load range, O_2 range, coal volatile matter range, and, for tangentially fired boilers, distribution of combustion air within the NO_X emission control system;

(ii) Certification by the designated representative that the owner(s) or operator have achieved and are following the operating conditions, boiler modifications, and upgrades that formed the basis for the system design and performance guarantee;

(iii) Any planned equipment modifications and upgrades for the purpose of achieving the maximum NO_X reduction performance of the NO_X emission control system that were not included in the design specifications and performance guarantee, but that were achieved prior to submission of this application and are being followed;

(iv) A list of any modifications or replacements of equipment that are to be done prior to the completion of the demonstration period for the purpose of reducing emissions of NO_X; and

(v) The parametric testing that will be conducted to determine the reason or reasons for the failure of the unit to achieve the applicable emission limitation and to verify the proper operation of the installed NO_X emission control

system during the demonstration period. The tests shall include tests in § 76.15, which may be modified as follows:

(A) The owner or operator of the unit may add tests to those listed in § 76.15, if such additions provide data relevant to the failure of the installed NO_X emission control system to meet the applicable emissions limitation in § 76.5, 76.6, or 76.7; or

(B) The owner or operator of the unit may remove tests listed in § 76.15 that are shown, to the satisfaction of the permitting authority, not to be relevant to NO_X emissions from the affected unit; and

(C) In the event the performance guarantee or the NO_X emission control system specifications require additional tests not listed in § 76.15, or specify operating conditions not verified by tests listed in § 76.15, the owner or operator of the unit shall include such additional tests.

(3) In accordance with § 76.10(d)(10), the following information for the operating period:

(i) The average NO_X emission rate (in lb/mmBtu) of the specific unit;

(ii) The highest hourly NO_X emission rate (in lb/mmBtu) of the specific unit;

(iii) Hourly NO_X emission rate (in lb/mmBtu), calculated in accordance with part 75 of this chapter;

(iv) Total heat input (in mmBtu) for the unit for each hour of operation, calculated in accordance with the requirements of part 75 of this chapter; and

(v) Total integrated hourly gross unit load (in MWge).

(b) A petition for an alternative emission limitation shall include the following information in accordance with § 76.10(e)(6).

(1) Total heat input (in mmBtu) for the unit for each hour of operation, calculated in accordance with the requirements of part 75 of this chapter;

(2) Hourly NO_X emission rate (in lb/mmBtu), calculated in accordance with the requirements of part 75 of this chapter; and

(3) Total integrated hourly gross unit load (MWge).

(c) *Reporting of the costs of low NO_X burner technology applied to Group 1, Phase I boilers.* (1) Except as provided in paragraph (c)(2) of this section, the designated representative of a Phase I unit with a Group 1 boiler that has installed or is installing any form of low NO_X burner technology shall submit to the Administrator a report containing the capital cost, operating cost, and baseline and post-retrofit emission data specified in appendix B to this part. If any of the required equipment, cost, and schedule information are not available (e.g., the retrofit project is still underway), the designated representative shall include in the report detailed cost estimates and other projected or estimated data in lieu of the information that is not available.

(2) The report under paragraph (c)(1) of this section is not required with regard to the following types of Group 1, Phase I units:

(i) Units employing no new NO_X emission control system after November 15, 1990;

(ii) Units employing modifications to boiler operating parameters (e.g., burners out of service or fuel switching) without low NO_X burners or other emission reduction equipment for reducing NO_X emissions;

(iii) Units with wall-fired boilers employing only overfire air and units with tangentially fired boilers employing only separated overfire air; or

(iv) Units beginning installation of a new NO_X emission control system after August 11, 1995.

(3) The report under paragraph (c)(1) of this section shall be submitted to the Administrator by:

(i) 120 days after completion of the low NO_X burner technology retrofit project; or

(ii) May 23, 1995, if the project was completed on or before January 23, 1995.

§ 76.15 Test methods and procedures.

(a) The owner or operator may use the following tests as a basis for the report required by § 76.10(e)(7):

(1) Conduct an ultimate analysis of coal using ASTM D 3176–89 (incorporated by reference as specified in § 76.4);

(2) Conduct a proximate analysis of coal using ASTM D 3172–89 (incorporated by reference as specified in § 76.4); and

(3) Measure the coal mass flow rate to each individual burner using ASME Power Test Code 4.2 (1991), ''Test Code for Coal Pulverizers'' or ISO 9931 (1991), ''Coal—Sampling of Pulverized Coal Conveyed by Gases in Direct Fired Coal Systems'' (incorporated by reference as specified in § 76.4).

(b) The owner or operator may measure and record the actual NO_X emission rate in accordance with the requirements of this part while varying the following parameters where possible to determine their effects on the emissions of NO_X from the affected boiler:

(1) Excess air levels;

(2) Settings of burners or coal and air nozzles, including tilt and yaw, or swirl;

(3) For tangentially fired boilers, distribution of combustion air within the NO_X emission control system;

(4) Coal mass flow rates to each individual burner;

(5) Coal-to-primary air ratio (based on pound per hour) for each burner, the average coal-to-primary air ratio for all burners, and the deviations of individual burners' coal-to-primary air ratios from the average value; and

(6) If the boiler uses varying types of coal, the type of coal. Provide the results of proximate and ultimate analyses of each type of as-fired coal.

(c) In performing the tests specified in paragraph (a) of this section, the owner or operator shall begin the tests using the equipment settings for which the NO_X emission control system was designed to meet the NO_X emission rate guaranteed by the primary NO_X emission control system vendor. These results constitute the ''baseline controlled'' condition.

(d) After establishing the baseline controlled condition under paragraph (c) of this section, the owner or operator may:

(1) Change excess air levels ± 5 percent from the baseline controlled condition to determine the effects on emissions of NO_X, by providing a minimum of three readings (e.g., with a baseline reading of 20 percent excess air, excess air levels will be changed to 19 percent and 21 percent);

(2) For tangentially fired boilers, change the distribution of combustion air within the NO_X emission control system to determine the effects on NO_X emissions by providing a minimum of three readings, one with the minimum, one with the baseline, and one with the maximum amounts of staged combustion air; and

(3) Show that the combustion process within the boiler is optimized (e.g., that the burners are balanced).

§ 76.16 [Reserved]

APPENDIX A TO PART 76—PHASE I AFFECTED COAL-FIRED UTILITY UNITS WITH GROUP 1 OR CELL BURNER BOILERS

TABLE 1—PHASE I TANGENTIALLY FIRED UNITS

State	Plant	Unit	Operator
ALABAMA	EC GASTON	5	ALABAMA POWER CO.
GEORGIA	BOWEN	1BLR	GEORGIA POWER CO.
GEORGIA	BOWEN	2BLR	GEORGIA POWER CO.
GEORGIA	BOWEN	3BLR	GEORGIA POWER CO.
GEORGIA	BOWEN	4BLR	GEORGIA POWER CO.
GEORGIA	JACK MCDONOUGH	MB1	GEORGIA POWER CO.
GEORGIA	JACK MCDONOUGH	MB2	GEORGIA POWER CO.
GEORGIA	WANSLEY	1	GEORGIA POWER CO.
GEORGIA	WANSLEY	2	GEORGIA POWER CO.
GEORGIA	YATES	Y1BR	GEORGIA POWER CO.
GEORGIA	YATES	Y2BR	GEORGIA POWER CO.
GEORGIA	YATES	Y3BR	GEORGIA POWER CO.
GEORGIA	YATES	Y4BR	GEORGIA POWER CO.
GEORGIA	YATES	Y5BR	GEORGIA POWER CO.
GEORGIA	YATES	Y6BR	GEORGIA POWER CO.
GEORGIA	YATES	Y7BR	GEORGIA POWER CO.
ILLINOIS	BALDWIN	3	ILLINOIS POWER CO.
ILLINOIS	HENNEPIN	2	ILLINOIS POWER CO.
ILLINOIS	JOPPA	1	ELECTRIC ENERGY INC.
ILLINOIS	JOPPA	2	ELECTRIC ENERGY INC.
ILLINOIS	JOPPA	3	ELECTRIC ENERGY INC.
ILLINOIS	JOPPA	4	ELECTRIC ENERGY INC.
ILLINOIS	JOPPA	5	ELECTRIC ENERGY INC.

TABLE 1—PHASE I TANGENTIALLY FIRED UNITS—Continued

State	Plant	Unit	Operator
ILLINOIS	JOPPA	6	ELECTRIC ENERGY INC.
ILLINOIS	MEREDOSIA	5	CEN ILLINOIS PUB SER.
ILLINOIS	VERMILION	2	ILLINOIS POWER CO.
INDIANA	CAYUGA	1	PSI ENERGY INC.
INDIANA	CAYUGA	2	PSI ENERGY INC.
INDIANA	EW STOUT	50	INDIANAPOLIS PWR & LT.
INDIANA	EW STOUT	60	INDIANAPOLIS PWR & LT.
INDIANA	EW STOUT	70	INDIANAPOLIS PRW & LT.
INDIANA	HT PRITCHARD	6	INDIANAPOLIS PWR & LT.
INDIANA	PETERSBURG	1	INDIANAPOLIS PWR & LT.
INDIANA	PETERSBURG	2	INDIANAPOLIS PWR & LT.
INDIANA	WABASH RIVER	6	PSI ENERGY INC.
IOWA	BURLINGTON	1	IOWA SOUTHERN UTL.
IOWA	ML KAPP	2	INTERSTATE POWER CO.
IOWA	RIVERSIDE	9	IOWA-ILL GAS & ELEC.
KENTUCKY	ELMER SMITH	2	OWENSBORO MUN UTIL.
KENTUCKY	EW BROWN	2	KENTUCKY UTL CO.
KENTUCKY	EW BROWN	3	KENTUCKY UTL CO.
KENTUCKY	GHENT	1	KENTUCKY UTL CO.
MARYLAND	MORGANTOWN	1	POTOMAC ELEC PWR CO.
MARYLAND	MORGANTOWN	2	POTOMAC ELEC PWR CO.
MICHIGAN	JH CAMPBELL	1	CONSUMERS POWER CO.
MISSOURI	LABADIE	1	UNION ELECTRIC CO.
MISSOURI	LABADIE	2	UNION ELECTRIC CO.
MISSOURI	LABADIE	3	UNION ELECTRIC CO.
MISSOURI	LABADIE	4	UNION ELECTRIC CO.
MISSOURI	MONTROSE	1	KANSAS CITY PWR & LT.
MISSOURI	MONTROSE	2	KANSAS CITY PWR & LT.
MISSOURI	MONTROSE	3	KANSAS CITY PWR & LT.
NEW YORK	DUNKIRK	3	NIAGARA MOHAWK PWR.
NEW YORK	DUNKIRK	4	NIAGARA MOHAWK PWR.
NEW YORK	GREENIDGE	6	NY STATE ELEC & GAS.
NEW YORK	MILLIKEN	1	NY STATE ELEC & GAS.
NEW YORK	MILLIKEN	2	NY STATE ELEC & GAS.
OHIO	ASHTABULA	7	CLEVELAND ELEC ILLUM.
OHIO	AVON LAKE	11	CLEVELAND ELEC ILLUM.
OHIO	CONESVILLE	4	COLUMBUS STHERN PWR.
OHIO	EASTLAKE	1	CLEVELAND ELEC ILLUM.
OHIO	EASTLAKE	2	CLEVELAND ELEC ILLUM.
OHIO	EASTLAKE	3	CLEVELAND ELEC ILLUM.
OHIO	EASTLAKE	4	CLEVELAND ELEC ILLUM.
OHIO	MIAMI FORT	6	CINCINNATI GAS & ELEC.
OHIO	WC BECKJORD	5	CINCINNATI GAS & ELEC.
OHIO	WC BECKJORD	6	CINCINNATI GAS & ELEC.
PENNSYLVANIA	BRUNNER ISLAND	1	PENNSYLVANIA PWR & LT.
PENNSYLVANIA	BRUNNER ISLAND	2	PENNSYLVANIA PWR & LT.
PENNSYLVANIA	BRUNNER ISLAND	3	PENNSYLVANIA PWR & LT.
PENNSYLVANIA	CHESWICK	1	DUQUESNE LIGHT CO.
PENNSYLVANIA	CONEMAUGH	1	PENNSYLVANIA ELEC CO.
PENNSYLVANIA	CONEMAUGH	2	PENNSYLVANIA ELEC CO.
PENNSYLVANIA	PORTLAND	1	METROPOLITAN EDISON.
PENNSYLVANIA	PORTLAND	2	METROPOLITAN EDISON.
PENNSYLVANIA	SHAWVILLE	3	PENNSYLVANIA ELEC CO.
PENNSYLVANIA	SHAWVILLE	4	PENNSYLVANIA ELEC CO.
TENNESSEE	GALLATIN	1	TENNESSEE VAL AUTH.
TENNESSEE	GALLATIN	2	TENNESSEE VAL AUTH.
TENNESSEE	GALLATIN	3	TENNESSEE VAL AUTH.
TENNESSEE	GALLATIN	4	TENNESSEE VAL AUTH.
TENNESSEE	JOHNSONVILLE	1	TENNESSEE VAL AUTH.
TENNESSEE	JOHNSONVILLE	2	TENNESSEE VAL AUTH.
TENNESSEE	JOHNSONVILLE	3	TENNESSEE VAL AUTH.
TENNESSEE	JOHNSONVILLE	4	TENNESSEE VAL AUTH.
TENNESSEE	JOHNSONVILLE	5	TENNESSEE VAL AUTH.
TENNESSEE	JOHNSONVILLE	6	TENNESSEE VAL AUTH.
WEST VIRGINIA	ALBRIGHT	3	MONONGAHELA POWER CO.
WEST VIRGINIA	FORT MARTIN	1	MONONGAHELA POWER CO.
WEST VIRGINIA	MOUNT STORM	1	VIRGINIA ELEC & PWR.
WEST VIRGINIA	MOUNT STORM	2	VIRGINIA ELEC & PWR.
WEST VIRGINIA	MOUNT STORM	3	VIRGINIA ELEC & PWR.
WISCONSIN	GENOA	1	DAIRYLAND POWER COOP.
WISCONSIN	SOUTH OAK CREEK	7	WISCONSIN ELEC POWER.
WISCONSIN	SOUTH OAK CREEK	8	WISCONSIN ELEC POWER.

TABLE 2—PHASE I DRY BOTTOM-FIRED UNITS

State	Plant	Unit	Operator
ALABAMA	COLBERT	1	TENNESSEE VAL AUTH.
ALABAMA	COLBERT	2	TENNESSEE VAL AUTH.
ALABAMA	COLBERT	3	TENNESSEE VAL AUTH.
ALABAMA	COLBERT	4	TENNESSEE VAL AUTH.
ALABAMA	COLBERT	5	TENNESSEE VAL AUTH.
ALABAMA	EC GASTON	1	ALABAMA POWER CO.
ALABAMA	EC GASTON	2	ALABAMA POWER CO.
ALABAMA	EC GASTON	3	ALABAMA POWER CO.
ALABAMA	EC GASTON	4	ALABAMA POWER CO.
FLORIDA	CRIST	6	GULF POWER CO.
FLORIDA	CRIST	7	GULF POWER CO.
GEORGIA	HAMMOND	1	GEORGIA POWER CO.
GEORGIA	HAMMOND	2	GEORGIA POWER CO.
GEORGIA	HAMMOND	3	GEORGIA POWER CO.
GEORGIA	HAMMOND	4	GEORGIA POWER CO.
ILLINOIS	GRAND TOWER	9	CEN ILLINOIS PUB SER.
INDIANA	CULLEY	2	STHERN IND GAS & EL.
INDIANA	CULLEY	3	STHERN IND GAS & EL.
INDIANA	GIBSON	1	PSI ENERGY INC.
INDIANA	GIBSON	2	PSI ENERGY INC.
INDIANA	GIBSON	3	PSI ENERGY INC.
INDIANA	GIBSON	4	PSI ENERGY INC.
INDIANA	RA GALLAGHER	1	PSI ENERGY INC.
INDIANA	RA GALLAGHER	2	PSI ENERGY INC.
INDIANA	RA GALLAGHER	3	PSI ENERGY INC.
INDIANA	RA GALLAGHER	4	PSI ENERGY INC.
INDIANA	FRANK E RATTS	1SG1	HOOSIER ENERGY REC.
INDIANA	FRANK E RATTS	2SG1	HOOSIER ENERGY REC.
INDIANA	WABASH RIVER	1	PSI ENERGY INC.
INDIANA	WABASH RIVER	2	PSI ENERGY INC.
INDIANA	WABASH RIVER	3	PSI ENERGY INC.
INDIANA	WABASH RIVER	5	PSI ENERGY INC.
IOWA	DES MOINES	11	IOWA PWR & LT CO.
IOWA	PRAIRIE CREEK	4	IOWA ELEC LT & PWR.
KANSAS	QUINDARO	2	KS CITY BD PUB UTIL.
KENTUCKY	COLEMAN	C1	BIG RIVERS ELEC CORP.
KENTUCKY	COLEMAN	C2	BIG RIVERS ELEC CORP.
KENTUCKY	COLEMAN	C3	BIG RIVERS ELEC CORP.
KENTUCKY	EW BROWN	1	KENTUCKY UTL CO.
KENTUCKY	GREEN RIVER	5	KENTUCKY UTL CO.
KENTUCKY	HMP&L STATION 2	H1	BIG RIVERS ELEC CORP.
KENTUCKY	HMP&L STATION 2	H2	BIG RIVERS ELEC CORP.
KENTUCKY	HL SPURLOCK	1	EAST KY PWR COOP.
KENTUCKY	JS COOPER	1	EAST KY PWR COOP.
KENTUCKY	JS COOPER	2	EAST KY PWR COOP.
MARYLAND	CHALK POINT	1	POTOMAC ELEC PWR CO.
MARYLAND	CHALK POINT	2	POTOMAC ELEC PWR CO.
MINNESOTA	HIGH BRIDGE	6	NORTHERN STATES PWR.
MISSISSIPPI	JACK WATSON	4	MISSISSIPPI PWR CO.
MISSISSIPPI	JACK WATSON	5	MISSISSIPPI PWR CO.
MISSOURI	JAMES RIVER	5	SPRINGFIELD UTL.
OHIO	CONESVILLE	3	COLUMBUS STHERN PWR.
OHIO	EDGEWATER	13	OHIO EDISON CO.
OHIO	MIAMI FORT [1]	5–1	CINCINNATI GAS&ELEC.
OHIO	MIAMI FORT [1]	5–2	CINCINNATI GAS&ELEC.
OHIO	PICWAY	9	COLUMBUS STHERN PWR.
OHIO	RE BURGER	7	OHIO EDISON CO.
OHIO	RE BURGER	8	OHIO EDISON CO.
OHIO	WH SAMMIS	5	OHIO EDISON CO.
OHIO	WH SAMMIS	6	OHIO EDISON CO.
PENNSYLVANIA	ARMSTRONG	1	WEST PENN POWER CO.
PENNSYLVANIA	ARMSTRONG	2	WEST PENN POWER CO.
PENNSYLVANIA	MARTINS CREEK	1	PENNSYLVANIA PWR & LT.
PENNSYLVANIA	MARTINS CREEK	2	PENNSYLVANIA PWR & LT.
PENNSYLVANIA	SHAWVILLE	1	PENNSYLVANIA ELEC CO.
PENNSYLVANIA	SHAWVILLE	2	PENNSYLVANIA ELEC CO.
PENNSYLVANIA	SUNBURY	3	PENNSYLVANIA PWR & LT.
PENNSYLVANIA	SUNBURY	4	PENNSYLVANIA PWR & LT.

TABLE 2—PHASE I DRY BOTTOM-FIRED UNITS—Continued

State	Plant	Unit	Operator
TENNESSEE	JOHNSONVILLE	7	TENNESSEE VAL AUTH.
TENNESSEE	JOHNSONVILLE	8	TENNESSEE VAL AUTH.
TENNESSEE	JOHNSONVILLE	9	TENNESSEE VAL AUTH.
TENNESSEE	JOHNSONVILLE	10	TENNESSEE VAL AUTH.
WEST VIRGINIA	HARRISON	1	MONONGAHELA POWER CO.
WEST VIRGINIA	HARRISON	2	MONONGAHELA POWER CO.
WEST VIRGINIA	HARRISON	3	MONONGAHELA POWER CO.
WEST VIRGINIA	MITCHELL	1	OHIO POWER CO.
WEST VIRGINIA	MITCHELL	2	OHIO POWER CO.
WISCONSIN	JP PULLIAM	8	WISCONSIN PUB SER CO.
WISCONSIN	NORTH OAK CREEK[2]	1	WISCONSIN ELEC PWR.
WISCONSIN	NORTH OAK CREEK[2]	2	WISCONSIN ELEC PWR.
WISCONSIN	NORTH OAK CREEK[2]	3	WISCONSIN ELEC PWR.
WISCONSIN	NORTH OAK CREEK[2]	4	WISCONSIN ELEC PWR.
WISCONSIN	SOUTH OAK CREEK[2]	5	WISCONSIN ELEC PWR.
WISCONSIN	SOUTH OAK CREEK[2]	6	WISCONSIN ELEC PWR.

[1] Vertically fired boiler.
[2] Arch-fired boiler.

TABLE 3—PHASE I CELL BURNER TECHNOLOGY UNITS

State	Plant	Unit	Operator
INDIANA	WARRICK	4	STHERN IND GAS & EL.
MICHIGAN	JH CAMPBELL	2	CONSUMERS POWER CO.
OHIO	AVON LAKE	12	CLEVELAND ELEC ILLUM.
OHIO	CARDINAL	1	CARDINAL OPERATING.
OHIO	CARDINAL	2	CARDINAL OPERATING.
OHIO	EASTLAKE	5	CLEVELAND ELEC ILLUM.
OHIO	GENRL JM GAVIN	1	OHIO POWER CO.
OHIO	GENRL JM GAVIN	2	OHIO POWER CO.
OHIO	MIAMI FORT	7	CINCINNATI GAS & EL.
OHIO	MUSKINGUM RIVER	5	OHIO POWER CO.
OHIO	WH SAMMIS	7	OHIO EDISON CO.
PENNSYLVANIA	HATFIELDS FERRY	1	WEST PENN POWER CO.
PENNSYLVANIA	HATFIELDS FERRY	2	WEST PENN POWER CO.
PENNSYLVANIA	HATFIELDS FERRY	3	WEST PENN POWER CO.
TENNESSEE	CUMBERLAND	1	TENNESSEE VAL AUTH.
TENNESSEE	CUMBERLAND	2	TENNESSEE VAL AUTH.
WEST VIRGINIA	FORT MARTIN	2	MONONGAHELA POWER CO.

APPENDIX B TO PART 76—PROCEDURES AND METHODS FOR ESTIMATING COSTS OF NITROGEN OXIDES CONTROLS APPLIED TO GROUP 1, PHASE I BOILERS

1. Purpose and Applicability

This technical appendix specifies the procedures, methods, and data that the Administrator will use in establishing ''***the degree of reduction achievable through this retrofit application of the best system of continuous emission reduction, taking into account available technology, costs, and energy and environmental impacts; and which is comparable to the costs of nitrogen oxides controls set pursuant to subsection (b)(1) (of section 407 of the Act).'' In developing the allowable NO_X emissions limitations for Group 2 boilers pursuant to subsection (b)(2) of section 407 of the Act, the Administrator will consider only those systems of continuous emission reduction that, when applied on a retrofit basis, are comparable in cost to the average cost in constant dollars of low NO_X burner technology applied to Group 1, Phase I boilers, as determined in section 3 below.

The Administrator will evaluate the capital cost (in dollars per kilowatt electrical ($/kW)), the operating and maintenance costs (in $/year), and the cost-effectiveness (in annualized $/ton NO_X removed) of installed low NO_X burner technology controls over a range of boiler sizes (as measured by the gross electrical capacity of the associated generator in megawatt electrical (MW)) and utilization rates (in percent gross nameplate capacity on an annual basis) to develop estimates of the average capital cost and cost-effectiveness for Group 1, Phase I boilers. The following units will be excluded from these determinations of the average capital cost and cost-effectiveness of NO_X controls set pursuant to subsection (b)(1) of section 407 of the Act: (1) Units employing an alternative technology, or only overfire air as applied to wall-fired boilers or only separated

overfire air as applied to tangentially fired boilers, in lieu of low NO_X burner technology for reducing NO_X emissions; (2) units employing no controls, only controls installed before November 15, 1990, or only modifications to boiler operating parameters (e.g., burners out of service or fuel switching) for reducing NO_X emissions; and (3) units that have not achieved the applicable emission limitation.

2. Average Capital Cost for Low NO_X Burner Technology Applied to Group 1, Phase I Boilers

The Administrator will use the procedures, methods, and data specified in this section to estimate the average capital cost (in $/kW) of installed low NO_X burner technology applied to Group 1, Phase I boilers.

2.1 Using cost data submitted pursuant to the reporting requirements in section 4 below, boiler-specific actual or estimated actual capital costs will be determined for each unit in the population specified in section 1 above for assessing the costs of installed low NO_X burner technology. The scope of installed low NO_X burner technology costs will include the following capital costs for retrofit application: (1) For the burner portion—burners or air and coal nozzles, burner throat and waterwall modifications, and windbox modifications; and, where applicable, (2) for the combustion air staging portion—waterwall modifications or panels, windbox modifications, and ductwork, and (3) scope adders or supplemental equipment such as replacement or additional fans, dampers, or ignitors necessary for the proper operation of the low NO_X burner technology. Capital costs associated with boiler restoration or refurbishment such as replacement of air heaters, asbestos abatement, and recasing will not be included in the cost basis for installed low NO_X burner technology. The scope of installed low NO_X burner technology retrofit capital costs will include materials, construction and installation labor, engineering, and overhead costs.

2.2 Using gross nameplate capacity (in MW) for each unit as reported in the National Allowance Data Base (NADB), boiler-specific capital costs will be converted to a $/kW basis.

2.3 Capital cost curves ($/kW versus boiler size in MW) or equations for installed low NO_X burner technology retrofit costs will be developed for: (1) Dry bottom wall fired boilers (excluding units applying cell burner technology) and (2) tangentially fired boilers.

2.4 The capital cost curves or equations defined above will be used to develop weighted average cost estimates of installed low NO_X burner technology applied to Group 1, Phase I boilers. The weighting factor will be the unit gross nameplate generating capacity (in MW) as reported in the NADB.

3. Average Cost-Effectiveness for Low NO_X Burner Technology Applied to Group 1, Phase I Boilers

The Administrator will use the procedures, methods, and data specified in this section to estimate the average cost-effectiveness (in annualized $/ton NO_X removed) of installed low NO_X burner technology applied to Group 1, Phase I boilers.

3.1 Boiler-specific estimates of annual tons NO_X removed by the installed low NO_X burner technology will be determined for each unit in the population specified in section 1 above.

3.1.1 The baseline NO_X emission rate (in lb/mmBtu, annual average basis) will be estimated prior to retrofitting any low NO_X burner technology controls. For units that have installed and certified continuous emission monitoring systems for measuring the NO_X emission rate pursuant to part 75 of this chapter at least 120 days prior to the low NO_X burner technology retrofit, an estimate of the average annual uncontrolled NO_X emission rate will be developed using continuous emission monitoring data for the 120 days immediately before the low NO_X burner technology retrofit or another continuous 120-day or longer period as approved by the Administrator. (In cases where 120 days of certified and quality-assured continuous emission monitoring data are not available prior to the low NO_X burner technology retrofit, the Administrator may use continuous emission monitoring data over a shorter period or short-term test data to estimate the uncontrolled NO_X emission rate.) Continuous emission monitoring data or other emission rate measurements will be extrapolated to one year of unit operation.

3.1.2 The controlled NO_X emission rate (in lb/mmBtu, annual average basis) will be estimated after installation, shakedown, and/or optimization of all low NO_X burner technology controls have been completed and while the unit is complying with the applicable emission limitation (or alternative emission limitation). Continuous emission monitoring data submitted pursuant to part 75 of this chapter will be used for the 120 days immediately following installation and testing of the final low NO_X burner technology, provided the unit is complying with the applicable emission limitation (or alternative emission limitation), or another continuous 120-day or shorter period as approved by the Administrator. Continuous emission monitoring data will be extrapolated to one year of unit operation.

3.1.3 The NO_X emission reduction (in lb/mmBtu, annual average basis) achieved by the installed low NO_X burner technology will be estimated by subtracting the controlled NO_X emission rate defined in section 3.1.2 from the uncontrolled NO_X emission rate defined in section 3.1.1.

3.1.4 Annual estimates of the NO_X emission reduction achieved by the installed low NO_X burner technology will be converted to annual tons of NO_X removed by multiplying it by the annual heat input (in mmBtu). Unit heat input data submitted pursuant to part 75 of this chapter for calendar year 1994 or for the year immediately following installation and testing of the final low NO_X burner technology, will be used when such data are available prior to October 30, 1995. Such data will be adjusted to an annual basis whenever a nonrecurrent extended outage at the affected unit during the period has taken place.

3.2 The boiler-specific capital costs of installed low NO_X burner technology developed in section 2.1 will be annualized by multiplying them by a constant dollar capital recovery factor based on a 20-year economic life (e.g., 0.115).

3.3 Using cost data submitted pursuant to the reporting requirements in section 4, boiler-specific annual operating and maintenance cost increases (or decreases) will be determined for each unit in the population specified in section 1 above. The scope of the operating and maintenance costs (or savings) attributable to the installed low NO_X burner technology may, but not necessarily will, include incremental increases (or decreases) in: maintenance labor and materials costs, operating labor costs, operating fuel costs, and secondary air fan electricity costs.

3.4 The average annual cost-effectiveness of installed low NO_X burner technology applied to Group 1, Phase I boilers will be estimated as follows: (1) The annualized capital costs defined in section 3.2 and the annual operating and maintenance cost increases (or decreases) defined in section 3.3 will be summed for all units in the population specified in section 1; and (2) these annualized costs will be divided by the sum of the NO_X emission reductions (in tons/year) achieved by the units in the population specified in section 1.

4. Reporting Requirements

4.1 The following information is to be submitted by each designated representative of a Phase I affected unit subject to the reporting requirements of § 76.14(c):

4.1.1 Schedule and dates for baseline testing, installation, and performance testing of low NO_X burner technology.

4.1.2 Estimates of the annual average baseline NO_X emission rate, as specified in section 3.1.1, and the annual average controlled NO_X emission rate, as specified in section 3.1.2, including the supporting continuous emission monitoring or other test data.

4.1.3 Copies of pre-retrofit and post-retrofit performance test reports.

4.1.4 Detailed estimates of the capital costs based on actual contract bids for each component of the installed low NO_X burner technology including the items listed in section 2.1. Indicate number of bids solicited. Provide a copy of the actual agreement for the installed technology.

4.1.5 Detailed estimates of the capital costs of system replacements or upgrades such as coal pipe changes, fan replacements/upgrades, or mill replacements/upgrades undertaken as part of the low NO_X burner technology retrofit project.

4.1.6 Detailed breakdown of the actual costs of the completed low NO_X burner technology retrofit project where low NO_X burner technology costs (section 4.1.4) are disaggregated, if feasible, from system replacement or upgrade costs (section 4.1.5).

4.1.7 Description of the probable causes for significant differences between actual and estimated low NO_X burner technology retrofit project costs.

4.1.8 Detailed breakdown of the burner and, if applicable, combustion air staging system annual operating and maintenance costs for the items listed in section 3.3 before and after the installation, shakedown, and/or optimization of the installed low NO_X burner technology. Include estimates and a description of the probable causes of the incremental annual operating and maintenance costs (or savings) attributable to the installed low NO_X burner technology.

4.2 All capital cost estimates are to be broken down into materials costs, construction and installation labor costs, and engineering and overhead costs. All operating and maintenance costs are to be broken down into maintenance materials costs, maintenance labor costs, operating labor costs, and fan electricity costs. All capital and operating costs are to be reported in dollars with the year of expenditure or estimate specified for each component.

PART 77—EXCESS EMISSIONS

Sec.

77.1 Purpose and scope.
77.2 General.
77.3 Offset plans for excess emissions of sulfur dioxide.
77.4 Administrator's action on proposed offset plans.
77.5 Deduction of allowances to offset excess emissions of sulfur dioxide.
77.6 Penalties for excess emissions of sulfur dioxide and nitrogen oxides.

AUTHORITY: 42 U.S.C. 7601 and 7651, et seq.

SOURCE: 58 FR 3757, Jan. 11, 1993, unless otherwise noted.

§ 77.1 Purpose and scope.

(a) This part sets forth the excess emissions offset planning and offset

penalty requirements under section 411 of the Clean Air Act, 42 U.S.C. 7401, et seq., as amended by Public Law 101–549 (November 15, 1990). These requirements shall apply to the owners and operators and, to the extent applicable, the designated representative of each affected unit and affected source under the Acid Rain Program.

(b) Nothing in this part shall limit or otherwise affect the application of sections 112(r)(9), 113, 114, 120, 303, 304, or 306 of the Act, as amended. Any allowance deduction, excess emission penalty, or interest required under this part shall not affect the liability of the affected unit's and affected source's owners and operators for any additional fine, penalty, or assessment, or their obligation to comply with any other remedy, for the same violation, as ordered under the Act.

§ 77.2 General.

Part 72 of this chapter, including §§ 72.2 (definitions), 72.3 (measurements, abbreviations, and acronyms), 72.4 (federal authority), 72.5 (State authority), 72.6 (applicability), 72.7 (new units exemption), 72.8 (retired units exemption), 72.9 (standard requirements), 72.10 (availability of information), and 72.11 (computation of time), shall apply to this part. The procedures for appeals of decisions of the Administrator under this part are contained in part 78 of this chapter.

§ 77.3 Offset plans for excess emissions of sulfur dioxide.

(a) *Applicability*. The owners and operators of any affected unit that has excess emissions of sulfur dioxide in any calendar year shall be liable to offset the amount of such excess emissions by an equal amount of allowances from the unit's Allowance Tracking System account.

(b) *Deadline*. Not later than 60 days after the end of any calendar year during which an affected unit had excess emissions of sulfur dioxide (except for any increase in excess emissions under § 72.91(b) of this chapter), the designated representative for the unit shall submit to the Administrator a complete proposed offset plan to offset those emissions. Each day after the 60-day deadline that the designated representative fails to submit a complete proposed offset plan shall be a separate violation of this part.

(c) *Number of Plans*. The designated representative shall submit a proposed offset plan for each affected unit with excess emissions of sulfur dioxide.

(d) *Contents of Plan*. A complete proposed offset plan shall include the following elements in a format prescribed by the Administrator for the unit and for the calendar year for which the plan is submitted:

(1) Identification of the unit.

(2) If the unit had excess emissions for the calendar year prior to the year for which the plan is submitted, an explanation of how and why the excess emissions occurred for the year for which the plan is submitted and a description of any measures that were or will be taken to prevent excess emissions in the future.

(3) The amount of excess emissions of sulfur dioxide (in tons/year) for the year for which the plan is submitted and the number of allowances required to be deducted from the unit's Allowance Tracking System account to offset the excess emissions.

(4) At the designated representative's option, the serial numbers of the allowances that are to be deducted from the unit's Allowance Tracking System account.

(5) Whether the allowances are to be deducted immediately from the unit's account or, if not, the date on which they are to be deducted.

(6) If the proposed offset plan does not propose a deduction of the amount of allowances under paragraph (d)(3) of this section from the compliance subaccount during the year after the year for which the plan is submitted, a demonstration that such a deduction will interfere with electric reliability.

§ 77.4 Administrator's action on proposed offset plans.

(a) *Determination of Completeness*. The Administrator will determine whether the proposed offset plan is complete within 30 days of receipt by the Administrator. The offset plan shall be deemed complete if the Administrator fails to notify the designated representative to the contrary within 30

days of receipt or when the Administrator approves the offset plan and deducts allowances in accordance with paragraph (b)(1) of this section.

(b) *Review of proposed offset plans.* (1) If the designated representative submits a complete proposed offset plan for immediate deduction, from the unit's compliance subaccount, of all allowances required to offset excess emissions of sulfur dioxide, the Administrator will approve the proposed offset plan without further review and will serve written notice of any approval on the designated representative and on any persons entitled to written notice under paragraphs (g)(2)(i) (B), (C) and (D) of this section. The Administrator will also give notice of any approval in the FEDERAL REGISTER. The plan will be incorporated into the unit's Acid Rain permit in accordance with § 72.84 (automatic permit amendment) and will not be subject to the requirements of paragraphs (d) through (k) of this section.

(2) Notwithstanding paragraph (b)(1) of this section, the Administrator may, in his or her discretion, require that the proposed offset plan under paragraph (b)(1) of this section be reviewed under paragraphs (c) through (k) of this section. The Administrator may exercise such discretion where he or she determines that review of the plan is necessary to ensure compliance with the emissions limitation and reduction goals or other purposes of title IV of the Act.

(3) If the designated representative submits a complete proposed offset plan that does not meet the requirements of paragraph (b)(1) of this section, the Administrator will review the plan under paragraphs (c) through (k) of this section.

(c) *Supplemental Information.* (1)(i) Regardless of whether the proposed offset plan is complete under paragraph (a) of this section, the Administrator may require submission of any additional information that the Administrator determines is necessary to approve an offset plan.

(ii) Such supplemental information may include, but is not limited to:

(A) A description of the measures that are proposed to be taken to ensure that the unit will have sufficient allowances to offset the excess emissions and to prevent excess emissions in future years;

(B) A schedule of compliance with appropriate increments of progress for the proposed measures; and

(C) A schedule for the submission of progress reports, and supporting documentation, describing actions taken and actions remaining to be taken under the schedule of compliance and any proposed adjustments to the schedule of compliance.

(2)(i) The designated representative shall submit the information required under paragraph (c)(1) of this section within 30 days after he or she is notified of the requirement for supplemental information unless the Administrator allows for additional time to collect and submit the information.

(ii) If the designated representative fails to submit the supplemental information within the required time period, the Administrator may disapprove the proposed offset plan.

(d) *Draft Offset Plan.* (1) After the Administrator receives a complete proposed offset plan and any supplemental information, the Administrator will prepare a draft offset plan that incorporates in whole, in part, or with changes or conditions as appropriate, the proposed offset plan or disapprove a draft offset plan for the affected unit. Regardless of whether the Administrator required the submission of the information set forth in paragraph (c)(1)(ii) of this section, the draft offset plan may include, among other requirements and conditions as determined to be appropriate by the Administrator, the submission of schedules of compliance, progress reports, and monitoring and other information.

(2) The draft offset plan will be based on the information submitted by the designated representative for the affected unit and other relevant information.

(3) The Administrator will serve a copy of the draft offset plan and the statement of basis on the designated representative of the affected unit.

(4) The Administrator will provide a 30-day period for public comment, and

opportunity to request a public hearing, on the draft offset plan or disapproval of a draft offset plan in accordance with the public notice required under paragraph (g)(1)(i)(A) of this section.

(e) *Offset Plan Administrative Record.* (1) The Administrator will prepare an administrative record for an offset plan or disapproval of an offset plan. The administrative record will contain:

(i) The proposed offset plan and any supporting or supplemental information submitted by the designated representative;

(ii) The draft offset plan;

(iii) The statement of basis;

(iv) Copies of all documents relied on by the Administrator in approving or disapproving the draft offset plan (including any records of discussions or conferences with owners, operators or the designated representative of the unit or interested persons regarding the draft offset plan) or, for any such documents that are readily available, a statement of their location;

(v) Copies of all written public comments submitted on the draft offset plan or disapproval of a draft offset plan;

(vi) The record of any public hearing on the draft offset plan or disapproval of a draft offset plan;

(vii) The offset plan approved by the Administrator; and

(viii) Any response to public comments submitted on the draft offset plan or disapproval of a draft offset plan, including any documents cited in the response and any other documents relied on by the Administrator or, for any such documents that are readily available, a statement of their location.

(2) The Administrator will approve or disapprove an offset plan within 6 months of receipt of a complete proposed offset plan.

(f) *Statement of Basis.* (1) The statement of basis will briefly set forth significant factual, legal, and policy considerations on which the Administrator relied in approving or disapproving the draft offset plan.

(2) The statement of basis will include:

(i) The reasons, and supporting authority, for approval or disapproval of any proposed offset plan that does not require deduction of allowances during the year after the year for which the plan is submitted, including references to applicable statutory or regulatory provisions and to the administrative record; and

(ii) The name, address, and telephone and facsimile number of the EPA office processing the approval or disapproval of the offset plan.

(g) *Opportunities for Public Comment on Draft Offset Plans.*

(1) *Generally.* (i) The Administrator will give public notice of the following:

(A) The draft offset plan or disapproval of a draft offset plan and the opportunity for public comment and to request a public hearing; and

(B) Date, time, location, and procedures for any scheduled hearing on the draft offset plan or the disapproval of a draft offset plan.

(ii) Any public notice given under this section may be for the approval or disapproval of one or more draft offset plans.

(2) *Methods.* The Administrator will give the public notice required by this section by:

(i) Serving written notice on the following persons (except to the extent any such person has waived his or her right to receive such notice):

(A) The designated representative;

(B) The State or local air pollution agency and any utility regulatory authority with jurisdiction over the owners of the unit covered by the proposed offset plan;

(C) The State or local air pollution agency for any contiguous State whose air quality may be affected by, or for any State located within a 50-mile radius of, the unit covered by the proposed offset plan; and

(D) Any interested person.

(ii) Giving notice by publication in the FEDERAL REGISTER and in a newspaper of general circulation in the area where the unit is located or in a State publication designed to give general public notice.

(3) *Contents.* All public notices issued under this part will contain the following information:

(i) Identification of the EPA office processing the approval or disapproval

of the draft offset plan for which the notice is being given.

(ii) Identification of the designated representative for the affected unit.

(iii) Identification of each affected unit covered by the proposed offset plan.

(iv) The amount of excess emissions that must be offset and the date on which the allowances are proposed to be deducted.

(v) The address and office hours of a public location where the administrative record is available for public inspection and a statement that all information submitted by the designated representative and not protected as confidential pursuant to section 114(c) of the Act is available for public inspections as part of the administrative record.

(vi) For public notice under paragraph (g)(1)(i)(A) of this section, a brief description of the public comment procedures, including:

(A) A 30-day public comment period beginning the date of publication of the notice or, in the case of an extension or reopening of the public comment period, such period as the Administrator deems appropriate;

(B) The address where public comments should be sent;

(C) Required formats and contents for public comment;

(D) An opportunity to request a public hearing to occur not earlier than 15 days after public notice is given and the location, date, time, and procedures of any scheduled public hearing; and

(E) Any other means by which the public may participate.

(4) *Extensions and Reopenings of the Public Comment Period.* On the Administrator's own motion, or on the request for any person, the Administrator may, at his or her discretion, extend or reopen the public comment period where he or she finds that doing so will contribute to the decision-making process by clarifying one or more significant issues affecting the draft offset plan or disapproval of a draft offset plan. Notice of any such extension or reopening will be given under paragraph (g)(1)(i)(A) of this section.

(h) *Public comments.* (1) General. During the public comment period, any person may submit written comments on the draft offset plan or disapproval of a draft offset plan.

(2) Form. (i) Comments shall be submitted in duplicate.

(ii) The submission shall clearly indicate the draft offset plan approval or disapproval to which the comments apply.

(iii) The submission shall clearly indicate the name of the commenter, his or her interest, and his or her affiliation, if any, to owners and operators of any unit covered by the proposed offset plan.

(3) Contents. Timely comments on any aspect of a draft offset plan or disapproval of a draft offset plan will be considered unless they concern issues that are not relevant, such as:

(i) The environmental effects of acid rain, acid deposition, sulfur dioxide, or nitrogen oxides generally; and

(ii) Offset plan approval procedures or actions on other proposed offset plans that are not relevant to approval or disapproval of the draft offset plan in question.

(4) Persons who do not wish to raise issues on the draft offset plan or denial of a draft offset plan, but who wish to be notified of any subsequent actions concerning such matter, may so indicate during the public comment period or at any other time. The Administrator will place their names on a list of interested persons.

(i) *Opportunity for Public Hearing.* (1) During the public comment period, any person may request a public hearing. A request for a public hearing shall be made in writing and shall state the issues proposed to be raised in the hearing.

(2) On the Administrator's own motion or on the request of any person, the Administrator may, at his or her discretion, hold a public hearing whenever the Administrator finds that such a hearing will contribute to the decision-making process by clarifying one or more significant issues affecting the draft offset plan or disapproval of a draft offset plan. Public hearings will not be held on issues under paragraphs (h)(3) (i) and (ii) of this section.

(3) During a public hearing under this section, any person may submit oral or written comments concerning the draft

offset plan or disapproval of a draft offset plan. The Administrator may set reasonable limits on the time allowed for oral statements and will require the submission of written summaries of each oral statement.

(4) The Administrator will assure that a record is made of the hearing.

(j) *Response to Comments.* (1) The Administrator will consider comments on the draft offset plan or disapproval of a draft offset plan received during the public comment period and any public hearing. The Administrator is not required to consider comments otherwise received.

(2) In approving or disapproving an offset plan, the Administrator will:

(i) Identify any draft offset plan provision or portion of the statement of basis that has been changed and the reasons for the change; and

(ii) Briefly describe and respond to relevant comments under paragraph (j)(1) of this section.

(k) *Approval and Effective Date of Excess Emissions Offset Plans.* (1) After the close of the public comment period, the Administrator will approve an offset plan requiring allowance deductions in an amount equal to the unit's tons of excess emissions or disapprove an offset plan. The Administrator will serve a copy of any approved offset plan and the response to comment on the designated representative for the affected unit involved and serve written notice of the approval or disapproval of the offset plan on any persons who are entitled to written notice under paragraphs (g)(2)(i) (B), (C), and (D) of this section. The Administrator will also give notice in the FEDERAL REGISTER.

(2) The Administrator will approve an offset plan requiring deduction from the unit's compliance subaccount, by December 31 of the year after the year for which the report is submitted, of all allowances necessary to offset the excess emissions except to the extent the designated representative of the unit demonstrates that such a deduction will interfere with electric reliability.

(3) Upon approval of the offset plan by the Administrator, the offset plan will be incorporated into the Acid Rain permit in accordance with § 72.84 (automatic permit amendment) and shall supersede any inconsistent provision of the permit.

§ 77.5 Deduction of allowances to offset excess emissions of sulfur dioxide.

(a) The Administrator will deduct allowances to offset excess emissions in accordance with the offset plan approved under § 77.4(b) (1) or (k) or in accordance with § 72.91(b) of this chapter.

(b) The designated representative shall hold enough allowances in the appropriate compliance subaccount to cover the deductions to be made in accordance with paragraph (a) or paragraph (c) of this section.

(c) If the designated representative does not submit a timely and complete proposed offset plan, or if the Administrator disapproves a proposed offset plan under § 77.4 (c) or (k), the Administrator will immediately deduct allowances, from the unit's compliance subaccount on a first-in, first-out basis in accordance with § 73.35(c)(2) of this chapter, equal to the amount of the unit's excess emissions of sulfur dioxide.

(d) If a compliance subaccount does not contain adequate allowances to offset the excess emissions, the Administrator will deduct the required allowances whenever allowances are recorded to that account.

§ 77.6 Penalties for excess emissions of sulfur dioxide and nitrogen oxides.

(a) If excess emissions of sulfur dioxide or nitrogen oxides occur at an affected unit during any year, the owners and operators of the affected unit shall pay, without demand, an excess emissions penalty, as calculated under paragraph (b) of this section. Such payment shall be submitted to the Administrator no later than 60 days after the end of any year during which excess emissions occurred at an affected unit or, for any increase in excess emissions of sulfur dioxide determined after adjustments made under § 72.91(b) of this chapter, or § 74.44(c)(2) of this chapter, by July 31 of the year in which the adjustments are made.

(b) *Penalty formula.* (1) The following formulas shall be used to determine the excess emissions penalty:

Penalty for excess emissions of sulfur dioxide=$2000/ton × annual adjustment factor × tons of excess emissions of sulfur dioxide.

Penalty for excess emissions of nitrogen oxides=$2000/ton × annual adjustment factor × tons of excess emissions of nitrogen oxides.

(i) The annual adjustment factor will be calculated as follows:

Annual adjustment factor=1+{[CPI(year)−CPI(1990)]/CPI(1990)}

where:

(A) ''CPI(year)'' is the Consumer Price Index as defined in § 72.2 of this chapter and ''year'' is the year in which the unit had excess emissions.

(B) ''CPI(1990)'' is the Consumer Price Index for 1990, as defined in § 72.2 of this chapter.

(ii) The Administrator will publish the annual adjustment factor in the FEDERAL REGISTER by October 15 of each year beginning in 1995.

(2) The penalty may be rounded to the nearest dollar after completing the calculation in paragraph (b)(1)(i) of this section.

(3) The penalty for excess emissions of sulfur dioxide shall be paid separately from the payment for excess emissions of nitrogen oxides. Each payment shall be accompanied by a document, in a format prescribed by the Administrator, indicating the unit for which the payment is made, whether the payment is for excess emissions of sulfur dioxide or nitrogen oxides, the number of tons of excess emissions, the penalty amount, and the check or money order number of the payment.

(c) If an excess emissions penalty due under this part is not paid on or before the applicable deadline under paragraph (a) of this section, the penalty shall be subject to interest charges in accordance with the Debt Collection Act (31 U.S.C. 3717). Interest shall begin to accrue on the date on which the Administrator mails, to the designated representative of the unit with excess emissions, a demand notice for the payment.

(d)(1) Except for wire transfers made in accordance with paragraph (d)(2) of this section, payments of penalties shall be made by money order, cashier's check, certified check, or U.S. Treasury check made payable to the ''U.S. EPA.''

(2) Payments made under paragraph (c)(1) of this section shall be mailed to the following address, unless the Administrator has notified the designated representative of a different address: U.S. EPA: Headquarters Accounting Operations Branch, Acid Rain Excess Emissions Penalties, P.O. Box 952491, St. Louis, MO 63195–2491.

(3) Payments of penalties of $25,000 or more may be made by wire transfer to the U.S. Treasury at the Federal Reserve Bank of New York.

(e) If the Administrator determines that overpayment has been made, he or she will refund the overpayment without interest, as promptly as administratively possible.

(f) Excess emissions in any year resulting directly from an order issued in that year under section 110(f) of the Act shall not be subject to the penalty payment requirements of this section; *provided* that the designated representative of any unit subject to such order shall advise the Administrator within 30 days of issuance of the order that the order will result in such excess emissions.

[58 FR 3757, Jan. 11, 1993, as amended at 60 FR 17131, Apr. 4, 1995]

PART 78—APPEAL PROCEDURES FOR ACID RAIN PROGRAM

Sec.

78.1 Purpose and scope.
78.2 General.
78.3 Petition for administrative review and request for evidentiary hearing.
78.4 Filings.
78.5 Limitation on filing or presenting new evidence and raising new issues.
78.6 Action on petition for administrative review.
78.7 Stays of contested Acid Rain requirements pending appeal.
78.8 Consolidation and severance of appeals proceedings.
78.9 Notice of the filing of petition for administrative review.
78.10 *Ex parte* communications during pendency of a hearing.
78.11 Intervenors.
78.12 Standard of review.
78.13 Scheduling orders and pre-hearing conferences.
78.14 Evidentiary hearing procedure.
78.15 Motions in evidentiary hearings.

78.16 Record of appeal proceeding.
78.17 Proposed findings and conclusions and supporting brief.
78.18 Proposed decision.
78.19 Interlocutory appeal.
78.20 Appeal of decision of Administrator or proposed decision to the Environmental Appeals Board.

AUTHORITY: 42 U.S.C. 7601 and 7651, et. seq.

SOURCE: 58 FR 3760, Jan. 11, 1993, unless otherwise noted.

§ 78.1 Purpose and scope.

(a) This part shall govern appeals of any decision of the Administrator under the Acid Rain Program that, in the absence of an administrative appeal, will be final agency action; *provided* that matters listed in § 78.3(d) and interim decisions, such as draft Acid Rain permits or proposed alternative monitoring systems, may not be appealed.

(b) The decisions of the Administrator that may be appealed include but are not limited to:

(1) Under part 72 of this chapter;

(i) The determination of incompleteness of an Acid Rain permit application;

(ii) The issuance or denial of an Acid Rain permit and approval or disapproval of a compliance option by the Administrator;

(iii) The approval or disapproval of an early ranking application for Phase I extension under § 72.42 of this chapter;

(iv) The final determination of whether a technology is a qualified repowering technology under § 72.44 of this chapter;

(v) The issuance or denial of a written exemption for new units or retired units under §§ 72.7 and 72.8 of this chapter;

(vi) The approval or disapproval of a permit revision;

(vii) The decision on the deduction or return of allowances under §§ 72.41, 72.42, 72.43, 72.44, 72.91(b), and 72.92 (a) and (c) of this chapter; and

(viii) The failure to issue an Acid Rain permit in accordance with the deadline under § 72.74(b) of this chapter.

(2) Under part 73 of this chapter,

(i) The decision on a claim of error in a transfer recordation;

(ii) The decision on the allocation of allowances from the Conservation and Renewal Energy Reserve;

(iii) The decision on the allocation of allowances under regulations implementing sections 404(e), 405(g)(4), 405(i)(2), and 410(h) of the Act;

(iv) The decision on the allocation of allowances under part 73, subpart F of this chapter;

(v) The decision on the sale or return of allowances and transfer of proceeds under part 73, subpart E; and

(vi) The decision on the deduction of allowances under § 73.35(b) of this chapter.

(3) Under part 74 of this chapter,

(i) The determination of incompleteness of an opt-in permit application;

(ii) The issuance or denial of an opt-in permit and approval or disapproval of the transfer of allowances for the replacement of thermal energy;

(iii) The approval or disapproval of a permit revision to an opt-in permit;

(iv) The decision on the deduction or return of allowances under subpart E of part 74 of this chapter;

(4) Under part 75 of this chapter,

(i) The decision on a petition for approval of an alternative monitoring system;

(ii) The approval or disapproval of a monitoring system certification or recertification;

(iii) The finalization of annual emissions data, including retroactive adjustment based on audit;

(iv) The determination of the percentage of emissions reduction achieved by qualifying Phase I technology; and

(v) The determination on the acceptability of parametric missing data procedures for a unit equipped with add-on controls for sulfur dioxide and nitrogen oxides in accordance with part 75 of this chapter.

(5) Under part 77 of this chapter, the determination of incompleteness of an offset plan and the approval or disapproval of an offset plan under § 77.4 of this chapter and the deduction of allowances under § 77.5(c) of this chapter.

(c) In order to appeal a decision under paragraph (a) of this section, a person shall file a petition for administrative review with the Environmental Appeals Board under § 78.3. The Environmental Appeals Board will, consistent with § 78.6, either:

(1) Issue an order deciding the appeal; or

(2) Where there is a disputed issue of fact material to the contested portions of the decision, refer the proceeding to the Chief Administrative Law Judge, who will designate an Administrative Law Judge to conduct an evidentiary hearing to decide the disputed issue of fact. If the proposed decision is contested or the Environmental Appeals Board decides to review the proposed decision, the Environmental Appeals Board will issue an order deciding the appeal.

(d) Questions arising at any stage of a proceeding that are not addressed in this part will be resolved at the discretion of the Environmental Appeals Board or the Presiding Officer.

[58 FR 3760, Jan. 11, 1993, as amended at 60 FR 17132, Apr. 4, 1995]

§ 78.2 General.

Part 72 of this chapter, including §§ 72.2 (definitions), 72.3 (measurements, abbreviations, and acronyms), 72.4 (federal authority), 72.5 (State authority), 72.6 (applicability), 72.7 (new units exemption), 72.8 (retired units exemption), 72.9 (standard requirements), 72.10 (availability of information), and 72.11 (computation of time), shall apply to this part.

§ 78.3 Petition for administrative review and request for evidentiary hearing.

(a)(1) The following persons may petition for administrative review of a decision of the Administrator that is made under parts 72, 74, 75, 76, and 77 of this chapter and that is appealable under § 78.1(a) of this part:

(i) The designated representative for the unit covered by the decision;

(ii) The authorized account representative for an account covered by the decision; and

(iii) Any interested person.

(2) The following persons may petition for administrative review of a decision of the Administrator that is made under part 73 of this chapter and that is appealable under § 78.1(a):

(i) The authorized account representative for any Allowance Tracking System account covered by the decision; and

(ii) With regard to the decision on the allocation of allowances from the Conservation and Renewable Energy Reserve, the certifying official whose application is covered by the decision.

(b)(1) Within 60 days following issuance of a decision under § 78.1 of this part by the Administrator, any person under paragraph (a) of this section may file a petition with the Environmental Appeals Board for administrative review of the decision. If no petition for administrative review of a decision under § 78.1 of this part is filed within such period, the decision shall become final agency action.

(2) The petition may include a request for an evidentiary hearing to resolve any disputed issue of material fact concerning the decision.

(3) At the same time that the petition for administrative review is filed, the petitioner shall:

(i) Serve a copy of the petition on the designated representative or authorized account representative under paragraph (a)(1) and (2) of this section (unless the designated representative or authorized account representative is the petitioner) and the Administrator; and

(ii) Mail a notice of the petition to the persons entitled to written notice under § 72.65(b)(1)(ii), (iii), and (iv) of this chapter.

(c) The petition for administrative review under this part shall state with specificity:

(1) Each material factual and legal issue alleged to be in dispute and any such factual issue for which an evidentiary hearing is sought;

(2) A clear and concise statement of the nature and scope of the interest of the petitioner;

(3) A clear and concise brief in support of the petition, explaining why the factual or legal issues are material and, if an evidentiary hearing is requested, why direct and cross-examination of witnesses is necessary to resolve such factual issues;

(4) If an evidentiary hearing is requested, the time estimated to be necessary for an evidentiary hearing;

(5) If an evidentiary hearing is requested, a certified statement that, in the event of an evidentiary hearing, and without cost or expense to any

other party, any of the following persons shall be available to appear and testify:

(i) The petitioner; and

(ii) Any officer, director, employee, consultant, or agent of the petitioner.

(6) Specific references to the contested portions of the decision;

(7) Any revised or alternative action of the Administrator sought by the petitioner as necessary to implement the requirements, purposes, or policies of title IV of the Act; and

(8) Identification of any portion of the decision that the petitioner believes should be stayed pending resolution of the appeal.

(d) In no event shall a petition for administrative review be filed, or review be available under this part, with regard to:

(1) A decision under part 73 of this chapter to which the claim of error procedure applies, but for which no claim of error notification was submitted, under part 73 of this chapter;

(2) Any provision or requirement of part 72, 73, 74, 75, 76, or 77 of this chapter, including any standard requirement under § 72.9 of this chapter and any emissions monitoring or reporting requirements under part 75 of this chapter;

(3) The reliance by the Administrator on a certificate of representation submitted by a designated representative or a certification statement submitted by an authorized account representative under the Acid Rain Program; and

(4) Actions of the Administrator under sections 112(r), 113, 114, 120, 301, and 303 of the Act.

[58 FR 3760, Jan. 11, 1993, as amended at 60 FR 17132, Apr. 4, 1995]

§ 78.4 Filings.

(a) All original filings made under this part shall be signed by the person making the filing or by an attorney or authorized representative. Any filings on behalf of owners and operators of an affected unit or affected source shall be signed by the designated representative. Any filings on behalf of persons with an interest in allowances in a general account shall be signed by the authorized account representative. The name, address, telephone number, and facsimile number of the person making the filing shall be provided with the filing.

(b)(1) All data and information referred to, or in any way relied upon, in any filings made under this part shall be included in full and may not be incorporated by reference, unless the data or information is contained in the administrative record for the decision being appealed.

(2) Notwithstanding paragraph (b)(1) of this section, State or federal statutes, regulations, and judicial decisions published in a national reporter system, officially issued EPA documents of general applicability, and any other publicly and generally available reference material may be incorporated by reference. Any person incorporating such materials by reference shall provide copies of the materials as instructed by the Environmental Appeals Board or the Presiding Officer.

(3) If any part of any filing is in a foreign language, it shall be accompanied by an English translation verified by the person making the translation, under oath, to be complete and accurate, together with the name, address, and a brief statement of the qualifications of the person making the translation. Translations filed of material originally produced in a foreign language shall be accompanied by copies of the original material.

(4) Where relevant data or information is contained in a document also containing irrelevant matter, either the irrelevant matter shall be deleted or an index to the relevant portions of the document shall be included in the document.

(c)(1) Failure to comply with the requirements of this section or any other requirement in this part may result in the noncomplying portions of the filing being excluded from consideration. If the Environmental Appeals Board or the Presiding Officer determines on motion by any party or *sua sponte* that a filing fails to meet any requirement of this part, the Environmental Appeals Board or Presiding Officer may return the filing, together with a reference to the applicable requirements on which the determination is based. A person whose filing has been rejected has 7 days, from the date the returned filing is mailed, to correct the filing in

conformance with this part and refile it, unless the Environmental Appeals Board or Presiding Officer authorizes a longer time based on good cause shown.

(2) The making of a filing shall not mean or imply that the filing, in fact, meets all applicable requirements, that the filing contains reasonable grounds for the action requested, or that the action requested is in accordance with law.

(d) An original and two copies of any written filing under this part shall be filed with the Environmental Appeals Board unless a proceeding is pending before a Presiding Officer, in which case they shall be filed with the Hearing Clerk (except as provided under § 78.19(d)) of this part.

(e)(1) The party making any filing in a proceeding under this part shall also serve a copy of the filing on each party to the proceeding, or, with regard to a petition for administrative review, on the persons specified in § 78.3(b)(3) of this part.

(2) Every filing made under this part shall be accompanied by a certificate of service citing the date, place, time, and manner of service and the names of the persons served.

(f) The Hearing Clerk will maintain and furnish, to any person upon request, the official service list containing the name, service address, telephone, and facsimile numbers of each party to a proceeding under this part and his or her attorney or duly authorized representative.

(g) Affidavits filed under this part shall be made on personal knowledge and belief, set forth only those facts that are admissible into evidence under § 78.5 of this part, and show affirmatively that the affiant is competent to testify to the matters stated therein.

§ 78.5 Limitation on filing or presenting new evidence and raising new issues.

(a) Where there was an opportunity for public comment, or to submit a claim of error notification, prior to the decision that is subject to appeal, no evidence shall be filed or presented, and no issues raised, in a proceeding under this part that were not filed, presented, or raised during the public comment period, absent a showing of good cause explaining the party's failure to do so during the public comment period or in the claim of error notification. Good cause shall include any instance where the party seeking to file or present new evidence or raise a new issue shows that the evidence could not have reasonably been ascertained, filed, or presented, the issue could not have reasonably been ascertained or raised, or that the materiality of the new evidence or issue could not have reasonably been anticipated, prior to the close of the public comment period or the period for submitting a claim of error notification.

(b) If an evidentiary hearing is granted, no evidence shall be filed or presented on questions of law or policy or on matters not subject to challenge in the evidentiary hearing.

§ 78.6 Action on petition for administrative review.

(a) If no evidentiary hearing concerning the petition for review is requested or is to be held, the Environmental Appeals Board will issue an order under § 78.20(c) of this part.

(b)(1) The Environmental Appeals Board may grant a request for an evidentiary hearing, or schedule an evidentiary hearing *sua sponte*, if the Environmental Appeals Board finds that there are disputed issues of fact material to contested portions of the decision and determines, in its discretion, that an opportunity for direct- and cross-examination of witnesses may be necessary in order to resolve these factual issues.

(2) To the extent the Environmental Appeals Board grants a request for an evidentiary hearing, in whole or in part, it will:

(i) Identify the portions of the decision that have been contested, and the disputed factual issues that have been raised by the petitioner with regard to which the evidentiary hearing has been granted; and

(ii) Refer the disputed factual issues to the Chief Administrative Law Judge for decision and, in its discretion, may also refer all or a portion of the remaining legal, policy, or factual issues to the Chief Administrative Law Judge for decision.

(3)(i) After issues are referred to the Chief Administrative Law Judge, he or she will designate an Administrative Law Judge as Presiding Officer to conduct the evidentiary hearing.

(ii) Notwithstanding paragraph (b)(3)(i) of this section, if all parties waive in writing their right to have an Administrative Law Judge designated as the Presiding Officer, the Administrator may designate a lawyer permanently or temporarily employed by EPA and without any prior connection with the proceeding to serve as Presiding Officer.

§78.7 Stays of contested Acid Rain requirements pending appeal.

(a) A contested decision of the Administrator may be stayed, in whole or in part consistent with paragraph (b) of this section, by the Environmental Appeals Board or the Presiding Officer upon request of a party during a proceeding under this part only to the extent necessary to prevent irreparable injury pending final agency action.

(b) The following requirements shall in no event be stayed due to any appeal of a decision of the Administrator and shall be fully effective and enforceable:

(1) The allowance allocations for any year during which the appeal proceeding is pending or is being conducted;

(2) Any standard requirements under §72.9 of this chapter;

(3) The emissions monitoring and reporting requirements applicable to the affected units at an affected source under part 75 of this chapter;

(4) Uncontested provisions of the decision; and

(5) The terms of a certificate of representation submitted by a designated representative under part 72, subpart B of this chapter or a certification statement submitted by an authorized account representative under part 73, subpart C of this chapter.

(c) The permit shield under §72.51 of this chapter shall continue to be in effect.

(d) The Environmental Appeals Board or Presiding Officer shall specify which provisions of the decision shall be stayed.

§78.8 Consolidation and severance of appeals proceedings.

(a) The Environmental Appeals Board or Presiding Officer has the discretion to consolidate, in whole or in part, two or more proceedings under this part whenever it appears that a joint proceeding on any or all of the matters at issue in the proceedings will be in the interest of justice, will expedite or simplify consideration of the issues, and will not prejudice any party. Consolidation of proceedings under this paragraph (a) will not affect the right of any party to raise issues that might have been raised had there been no consolidation.

(b) The Environmental Appeals Board or Presiding Officer has the discretion to sever issues or parties from a proceeding under this part whenever it appears that separate proceedings will be in the interest of justice, will expedite or simplify consideration of the issues, and will not prejudice any party.

§78.9 Notice of the filing of petition for administrative review.

The Administrator will publish in the FEDERAL REGISTER a notice stating that a petition for administrative review of a decision of the Administrator has been filed and specifying any request in the petition for an evidentiary hearing.

§78.10 *Ex parte* communications during pendency of a hearing.

(a)(1) No party or interested person outside EPA, representative of a party or interested person, or member of the EPA trial staff shall make, or knowingly cause to be made, to any member of the decisional body an *ex parte* communication on the merits of a proceeding under this part.

(2) No member of the decisional body shall make, or knowingly cause to be made, to any party or interested person outside EPA, representative of a party or interested person, or member of the EPA trial staff, an *ex parte* communication on the merits of any proceeding under this part.

(3) A member of the decisional body who receives, makes, or knowingly causes to be made an *ex parte* communication prohibited by this paragraph

shall file with the Environmental Appeals Board (or, if the proceeding is pending before an Administrative Law Judge, with the Hearing Clerk) for inclusion in the record of the proceeding under this part any such written *ex parte* communications and memoranda stating the substance of any such oral *ex parte* communication.

(b) Whenever any member of the decisional body receives an *ex parte* communication made, or knowingly caused to be made by a party or representative of a party to a proceeding under this part, the person presiding over the proceedings then in progress may, to the extent consistent with justice, require the party to show good cause why its claim or interest in the proceedings should not be dismissed, denied, disregarded, or otherwise adversely affected on account of these *ex parte* communications.

(c) The prohibitions of paragraph (a) of this section shall begin to apply upon publication by the Administrator of the notice of the filing of a petition under § 78.9 of this part. This prohibition terminates on the date of final agency action.

§ 78.11 Intervenors.

(a) Within 30 days after notice is given under § 78.9 of this part that the petition for administrative review has been filed, any person listed in § 78.3(a) of this part may file a motion for leave to intervene in the proceeding. A motion for leave to intervene under this section shall set forth the grounds for the proposed intervention and may respond to the petition for administrative review. Late motions to intervene may be granted only for good cause shown.

(b) The Environmental Appeals Board of Presiding Officer will grant a motion to intervene only upon an express finding that:

(1) The motion to intervene raises matters relevant to the factual or legal issues to be reviewed;

(2) The intervenor consented to be bound by all stipulations previously entered into by the existing parties, and all orders previously issued, in the proceeding; and

(3) The intervention will promote the interests of justice and will not cause undue delay or prejudice to the rights of the existing parties.

§ 78.12 Standard of review.

(a) On appeal of a decision of the Administrator prior to which there was an opportunity for public comment, or to submit a claim of error notification:

(1) Except as provided under paragraph (a)(2) of this section, the petitioner shall have the burden of going forward and of persuasion to show that a finding of fact or conclusion of law underlying the decision is clearly erroneous or that an exercise of discretion or policy determination underlying the decision is arbitrary and capricious or otherwise warrants review.

(2) The owners and operators of the source or unit involved shall have the burden of persuasion that an Acid Rain permit or a written exemption under §§ 72.7 or 72.8 of this chapter was properly issued or should be issued.

(b) On appeal of a decision of the Administrator not covered by paragraph (a) of this section, the Administrator shall have the burden of going forward to show the rational basis for the decision. The petitioner shall have the burden of persuasion to show that a finding of fact or conclusion of law underlying the decision is clearly erroneous or that an exercise of discretion or policy determination underlying the decision is arbitrary and capricious or otherwise warrants review.

§ 78.13 Scheduling orders and prehearing conferences.

(a) If a request for an evidentiary hearing is granted, the Presiding Officer will issue an order scheduling the following:

(1) The filing by each party of a narrative statement of position on each factual issue in controversy.

(2) The identification of any witness that a party expects to call and of any written testimony, documents, papers, exhibits, or other materials that a party expects to introduce into evidence. At the request of the Presiding Officer, the party shall include a brief narrative summary of any witness' expected testimony and of any such materials.

(3) The filing of written testimony, in accordance with § 78.14(b) of this part,

and other evidence in support of a narrative statement.

(4) The filing of any motions by any party, including motions for the production of documentation, data, or other information material to the disputed facts to be addressed at the hearing.

(b) The Presiding Officer may also, on motion or *sua sponte,* schedule one or more pre-hearing conferences on the record to address any of the following:

(1) Simplification, clarification, amplification, or limitation of the issues.

(2) Admissions and stipulations of facts and determinations of the genuineness of documents.

(3) Objections to the introduction into evidence at the hearing of any written testimony or other submissions proposed by a party; *provided* that at any time before the end of the hearing, any party may make, and the Presiding Officer may consider and rule upon, a motion to strike testimony or other evidence (other than evidence included in the administrative record (if any) under §72.63 of this chapter) on the grounds of relevance, competency, or materiality.

(4) Taking official notice of any matters.

(5) Grouping of parties with substantially similar interests to eliminate redundant evidence, motions, objections, and briefs.

(6) Such other matters that may expedite the hearing or aid in the disposition of matters in dispute.

(c) The Presiding Officer will issue an order (which may be in the form of a transcript) reciting the actions taken at any pre-hearing conferences, setting the schedule for any hearing, and stating any areas of factual and legal agreement and disagreement and the methods and procedures to be used in developing any evidence.

§78.14 Evidentiary hearing procedure.

(a) If a request for an evidentiary hearing is granted, the Presiding Officer will conduct a fair and impartial hearing on the record, take action to avoid unnecessary delay in the disposition of the proceedings, and maintain order. For theses purposes, the Presiding Officer may:

(1) Administer oaths and affirmations.

(2) Regulate the course of the hearings and prehearing conferences and govern the conduct of participants.

(3) Examine witnesses.

(4) Identify and refer issues for interlocutory decision under §78.19 of this part.

(5) Rule on, admit, exclude, or limit evidence.

(6) Establish the time for filing motions, testimony and other written evidence, and briefs and making other filings.

(7) Rule on motions and other pending procedural matters, including but not limited to motions for summary disposition in accordance with §78.15 of this part.

(8) Order that the hearing be conducted in stages whenever the number of parties is large or the issues are numerous and complex.

(9) Allow direct and cross-examination of witnesses only to the extent the Presiding Officer determines that such direct and cross-examination may be necessary to resolve disputed issues of material fact; *provided* that no direct or cross-examination shall be allowed on questions of law or policy or regarding matters that are not subject to challenge in the evidentiary hearing.

(10) Limit public access to the hearing where necessary to protect confidential business information. The Presiding Officer will provide written notice of the hearing to the parties, and where the hearing will be open to the public, notice in the FEDERAL REGISTER no later than 15 days prior to commencement of the hearings.

(11) Take any other action not inconsistent with the provisions of this part for the maintenance of order at the hearing and for the expeditious, fair and impartial conduct of the proceeding.

(b) All direct and rebuttal testimony at an evidentiary hearing shall be filed in written form, unless, upon motion and good cause shown, the Presiding Officer, in his or her discretion, determines that oral presentation of such evidence on any particular factual issue will materially assist in the efficient resolution of the issue.

(c)(1) The Presiding Officer will admit all evidence that is not irrelevant, immaterial, unduly repetitious, or otherwise unreliable or of little probative value. Evidence relating to settlement that would be excluded in the federal courts under Rule 408 of the Federal Rules of Evidence shall not be admissible.

(2) Whenever any evidence or testimony is excluded by the Presiding Officer as inadmissible, all such evidence will remain a part of the record as an offer of proof. The party seeking the admission of oral testimony may make an offer of proof by means of a brief statement on the record describing the testimony excluded.

(3) When two or more parties have substantially similar interests and positions, the Presiding Officer may limit the number of attorneys or authorized representatives who will be permitted to examine witnesses and to make and argue motions and objections on behalf of those parties.

(4) Rulings of the Presiding Officer on the admissibility of evidence or testimony, the propriety of direct and cross-examination, and other procedural matters will appear in the record of the hearing and control further proceedings unless reversed by the Presiding Officer or as a result of an interlocutory appeal taken under § 78.19 of this part.

(5) All objections shall be made promptly or be deemed waived; *provided* that parties shall be presumed to have taken exception to an adverse ruling. No objection shall be deemed waived by further participation in the hearing.

§ 78.15 Motions in evidentiary hearings.

(a) Any party may make a motion to the Presiding Officer on any matter relating to the evidentiary hearing in accordance with the scheduling orders issued under § 78.13 of this part. All motions shall be in writing and served as provided in § 78.4 of this part, except those made on the record during an oral hearing before the Presiding Officer.

(b) Any party may make a motion for a summary disposition in its favor on any factual issue on the basis that there is no genuine issue of material fact. When a motion for summary disposition is made and supported, any party opposing the motion may not rest upon mere allegations or denials, but must show, by affidavit or by other materials subject to consideration by the Presiding Officer, that there is a genuine issue of material fact.

(c) Within 10 days after a motion made on the record or service of any written motion, any party may file a response to the motion. The time for response may be shortened or extended by the Presiding Officer for good cause shown.

(d) The Presiding Officer may schedule an oral argument and call for the filing of briefs on any motion. The Presiding Officer will rule on the motion within a reasonable time after the date that responses to the motion may be filed under paragraph (c) of this section and that any oral argument or filing of briefs is completed.

(e) If all factual issues are decided by summary disposition prior to the hearing, no hearing will be held and the Presiding Officer will issue a proposed decision under § 78.18 of this part. If a summary disposition is denied or if partial summary disposition is granted, the hearing shall proceed on the remaining issues.

§ 78.16 Record of appeal proceeding.

(a) The proposed decision issued by the Presiding Officer, transcripts of oral hearings or oral arguments, written direct and rebuttal testimony, and any other written materials of any kind filed in the proceeding will be part of the record and will be available to the public in the office of the Hearing Clerk, subject to the requirements of part 2 of this chapter.

(b) Hearings and oral arguments shall be recorded as specified by the Presiding Officer, and thereupon transcribed. After the hearing or oral argument, the reporter will certify and file with the Hearing Clerk.

(1) The original transcript; and

(2) Any exhibits received or offered into evidence at the hearing.

(c) The Hearing Clerk will promptly give written notice to the parties when any transcript is available. Any party that desires a copy of the transcript

may obtain a copy upon payment of costs.

(d) The Presiding Officer will allow witnesses, parties, and their counsel or representatives:

(1) Up to 7 days from issuance of the notice under paragraph (c) of this section in order to file written proposed corrections of the transcript necessary to correct errors made in the transcribing; and

(2) Up to 7 days from the submission of the corrections in order to file objections to the proposed corrections.

(e) The Presiding Officer will determine which, if any, corrections should be made to the transcript and incorporate them into the record.

§78.17 Proposed findings and conclusions and supporting brief.

Within 45 days after issuance of a notice under §78.16(c) of this part that the complete transcript of the evidentiary hearing is available, any party may file with the Hearing Clerk proposed findings and conclusions on the issues referred to the Presiding Officer and a brief in support thereof. Briefs shall contain appropriate references to the record. The Presiding Officer, for good cause shown, may shorten or extend the time for filing and may allow reply briefs.

§78.18 Proposed decision.

(a) The Presiding Officer will review and evaluate the record, including the proposed findings and conclusions and any briefs filed by the parties, and issue a proposed decision on the factual, policy, and legal issues referred by the Environmental Appeals Board for decision under §78.6(b)(2)(ii) of this part, accompanied by findings of fact and proposed conclusions of law, as appropriate, within a reasonable time after the evidentiary hearing is completed. The Hearing Clerk will promptly serve copies of the proposed decision on all parties and on the Environmental Appeals Board.

(b) The proposed decision of the Presiding Officer shall become the final agency action under section 307 of the Act 30 days after service unless within that time:

(1) A party files objections with the Environmental Appeals Board pursuant to §78.20(a) of this part, or

(2) The Environmental Appeals Board *sua sponte* files a notice that it will review the decision under §78.20(b) of this part.

§78.19 Interlocutory appeal.

(a) Interlocutory appeal from orders or rulings of the Presiding Officer made during the course of a proceeding may be taken if the Presiding Officer certifies those orders or rulings to the Environmental Appeals Board for interlocutory appeal on the record. Any requests to the Presiding Officer to certify an interlocutory appeal shall be filed within 10 days of notice of the order or ruling and shall state briefly the grounds for the request.

(b)(1) Within 15 days of the filing of any request for interlocutory appeal, the Presiding Officer may certify an order or ruling for interlocutory appeal to the Environmental Appeals Board if:

(i) The order or ruling involves an important question on which there is substantial ground for difference of opinion, and

(ii) Either:

(A) An immediate appeal of the order or ruling will materially advance the ultimate completion of the proceeding, or

(B) A review after the proceeding is completed will be inadequate or ineffective.

(2) If the Presiding Officer takes no action within 15 days of the filing of a request for interlocutory appeal, the request shall be automatically dismissed without prejudice.

(c) If the Presiding Officer grants certification, the Environmental Appeals Board may accept or decline the interlocutory appeal within 30 days of certification. If the Environmental Appeals Board decides that certification was improperly granted, it will decline to hear the interlocutory appeal. If the Environmental Appeals Board takes no action within 30 days of certification, the interlocutory appeal shall be automatically dismissed without prejudice.

(d) If the Presiding Officer declines to certify an order or ruling for an interlocutory appeal, the order or ruling may be reviewed by the Environmental

Appeals Board only upon an appeal of the proposed decision following completion of the proceedings before the Presiding Officer, except when the Environmental Appeals Board determines, upon motion of a party and in exceptional circumstances, that to delay review would not be in the public interest. Such motion shall be filed with Environmental Appeals Board within 5 days after the earlier of automatic dismissal of the request for interlocutory appeal or receipt by the party of notification that the Presiding Officer declines to certify an order or ruling for interlocutory appeal.

(e) The failure of a party to request an interlocutory appeal shall not prevent an appeal of an order or ruling as part of an appeal of a proposed decision under § 78.20 of this part.

§ 78.20 Appeal of decision of Administrator or proposed decision to the Environmental Appeals Board.

(a) Within 30 days after the issuance of a proposed decision by a Presiding Officer under this part, any party may appeal any matter set forth in the proposed decision, or any other order or ruling made during the proceeding to which the party objected during the proceeding before the Presiding Officer, by filing an objection with the Environmental Appeals Board. On appeal of an order, ruling, or proposed decision of a Presiding Officer:

(1) The party filing the objection shall have the burden of going forward to show that the order, ruling, or proposed decision is based on a finding of fact or conclusion of law that is clearly erroneous; or a policy determination or exercise of discretion that is arbitrary and capricious or otherwise warrants review; and

(2) The petitioner or the owners and operators shall have the burden of persuasion, as set forth in § 78.12(a) (1) and (2) of this part.

(b) Within 30 days after issuance of a proposed decision of a Presiding Officer, the Environmental Appeals Board may issue *sua sponte* in its discretion a notice of intent to review such proposed decision. The Environmental Appeals Board will serve such notice upon all parties to the proceeding.

(c) Within a reasonable time following the filing of a petition for administrative review of a decision of the Administrator under § 78.3 of this part, or, if any issues raised by such petition are referred to the Presiding Officer, the filing of objections under paragraph (a) of this section or the issuance of a notice of intent to review under paragraph (b) of this section, the Environmental Appeals Board will issue an order affirming, reversing, modifying, or remanding the decision or proposed decision, as appropriate. Prior to issuing this order, the Environmental Appeals Board may provide an opportunity for parties to file additional briefs.

(d) If the Environmental Appeals Board issues an order affirming, reversing, or modifying the decision of the Administrator, then the decision as supplemented or changed by the order, shall be final agency action.

(e) If the Environmental Appeals Board issues an order affirming, reversing, or modifying the proposed decision, the proposed decision, as supplemented or changed by the order, shall be final agency action.

(f) If the Environmental Appeals Board issues an order remanding the proceeding, then final agency action occurs upon completion of the remanded proceeding, including any appeals to the Environmental Appeals Board in the remanded proceeding.

PART 79—REGISTRATION OF FUELS AND FUEL ADDITIVES

Subpart A—General Provisions

Sec.
79.1 Applicability.
79.2 Definitions.
79.3 Availability of information.
79.4 Requirement of registration.
79.5 Periodic reporting requirements.
79.6 Requirement for testing.
79.7 Samples for test purposes.
79.8 Penalties.

Subpart B—Fuel Registration Procedures

79.10 Application for registration by fuel manufacturer.
79.11 Information and assurances to be provided by the fuel manufacturer.
79.12 Determination of noncompliance.
79.13 Registration.
79.14 Termination of registration of fuels.

Subpart C—Additive Registration Procedures

79.20 Application for registration by additive manufacturer.
79.21 Information and assurances to be provided by the additive manufacturer.
79.22 Determination of noncompliance.
79.23 Registration.
79.24 Termination of registration of additives.

Subpart D—Designation of Fuels and Additives

79.30 Scope.
79.31 Additives.
79.32 Motor vehicle gasoline.
79.33 Motor vehicle diesel fuel.

Subpart E—[Reserved]

Subpart F—Testing Requirements for Registration

79.50 Definitions.
79.51 General requirements and provisions.
79.52 Tier 1.
79.53 Tier 2.
79.54 Tier 3.
79.55 Base fuel specifications.
79.56 Fuel and fuel additive grouping system.
79.57 Emission generation.
79.58 Special provisions.
79.59 Reporting requirements.
79.60 Good laboratory practice (GLP) standards for inhalation exposure health effects testing.
79.61 Vehicle emissions inhalation exposure guideline.
79.62 Subchronic toxicity study with specific health effect assessments.
79.63 Fertility assessment/teratology.
79.64 *In vivo* micronucleus assay.
79.65 *In vivo* sister chromatid exchange assay.
79.66 Neuropathology assessment.
79.67 Glial fibrillary acidic protein assay.
79.68 *Salmonella typhimurium* reverse mutation assay.

AUTHORITY: 42 U.S.C. 7414, 7524, 7545 and 7601.

SOURCE: 40 FR 52011, Nov. 7, 1975, unless otherwise noted.

Subpart A—General Provisions

§ 79.1 Applicability.

The regulations of this part apply to the registration of fuels and fuel additives designated by the Administrator, pursuant to section 211 of the Clean Air Act (42 U.S.C. 1857f–6c, as amended by section 9, Pub. L. 91–604).

§ 79.2 Definitions.

As used in this part, all terms not defined herein shall have the meaning given them in the Act:

(a) *Act* means the Clean Air Act (42 U.S.C. 1857 *et seq.*, as amended by Pub. L. 91–604).

(b) *Administrator* means the Administrator of the Environmental Protection Agency.

(c) *Fuel* means any material which is capable of releasing energy or power by combustion or other chemical or physical reaction.

(d) *Fuel manufacturer* means any person who, for sale or introduction into commerce, produces, manufactures, or imports a fuel or causes or directs the alteration of the chemical composition of, or the mixture of chemical compounds in, a bulk fuel by adding to it an additive.

(e) *Additive* means any substance that is intentionally added to a fuel named in the designation (including any added to a motor vehicle's fuel system) and that is not intentionally removed prior to sale or use.

(f) *Additive manufacturer* means any person who produces, manufactures, or imports an additive for use as an additive and/or sells or imports for sale such additive under the person's own name.

(g) *Range of concentration* means the highest concentration, the lowest concentration, and the average concentration of an additive in a fuel.

(h) *Chemical composition* means the name and percentage by weight of each compound in an additive and the name and percentage by weight of each element in an additive.

(i) *Chemical structure* means the molecular structure of a compound in an additive.

(j) *Impurity* means any chemical element present in an additive that is not included in the chemical formula or identified in the breakdown by element in the chemical composition of such additive.

[40 FR 52011, Nov. 7, 1975, as amended at 59 FR 33092, June 27, 1994]

§ 79.3 Availability of information.

The availability to the public of information provided to, or otherwise obtained by, the Administrator under this part shall be governed by part 2 of this chapter except as expressly noted in subpart F of this part.

[59 FR 33092, June 27, 1994]

§ 79.4 Requirement of registration.

(a) *Fuels.* (1) No manufacturer of any fuel designated under this part shall, after the date prescribed for such fuel in this part, sell, offer for sale, or introduce into commerce such fuel unless the Administrator has registered such fuel.

(2) No manufacturer of a registered fuel shall add or direct the addition to it of an additive which he has not previously reported unless he has notified the Administrator of such intended use, including the expected or estimated range of concentration. If necessary to meet an unforeseen production problem, however, a fuel manufacturer may use an additive that he has not previously reported provided that (i) the additive is on the current list of registered additives and (ii) the fuel manufacturer notifies the Administrator within 30 days regarding such unforeseen use and his plans regarding continued use, including the expected or estimated range of concentration.

(3) Any designated fuel that is (i) in a research, development, or test status; (ii) sold to automobile, engine, or component manufacturers for research, development, or test purposes; or (iii) sold to automobile manufacturers for factory fill, and is not in any case offered for commercial sale to the public, shall be exempt from registration.

(4) A domestic fuel manufacturer may purchase and offer for commercial sale foreign-produced fuel containing unidentified additives provided that within 30 days of his offer for sale he notifies the Administrator of the purchase, the source of purchase, the quantity purchased, and summarized results of any tests performed to determine the acceptability of the purchased fuel to the fuel manufacturer.

(b) *Additives.* (1) No manufacturer of any fuel additive designated under this part shall, after the date by which the additive must be registered under this part, sell, offer for sale, or introduce into commerce such additive for use in any type of fuel designated under this part unless the Administrator has registered that additive for use in that type of fuel.

(2) Any designated additive that is either (i) in a research, development, or test status or (ii) sold to petroleum, automobile, engine, or component manufacturers for research, development, or test purposes, and in either case is not offered for commercial sale to the public, shall be exempt from registration.

(3) Process chemicals used by refineries during the refinery process are exempted from the requirement for registration.

(4) If an additive manufacturer prepares for sale only to fuel manufacturers (i) a blend or mixture of two or more registered additives or (ii) a blend or mixture of one or more registered additives with one or more substances containing only carbon and/or hydrogen, he will not be required to register such blend or mixture provided he will, upon request, furnish the Administrator with the names and percentages by weight of all components of such blend or mixture.

[40 FR 52011, Nov. 7, 1975, as amended at 41 FR 21324, May 25, 1976; 59 FR 33092, June 27, 1994]

§ 79.5 Periodic reporting requirements.

(a) *Fuel manufacturers.* (1) For each calendar quarter (January through March, April through June, July through September, October through December) commencing after the date prescribed for a particular fuel in subpart D, fuel manufacturers shall submit to the Administrator a report for each registered fuel showing (i) the range of concentration of each additive reported under § 79.11(a) and (ii) the volume of such fuel produced in the quarter. Reports shall be submitted within 45 days after the close of the reporting period on forms supplied by the Administrator upon request.

(2) Fuel manufacturers shall submit to the Administrator a report annually

for each registered fuel providing additional data and information as specified in §79.31(c) and (d) in the designation of the fuel in subpart D. Reports shall be submitted on or before March 31 for the preceding year or part thereof on forms supplied by the Administrator upon request. If the date prescribed for a particular fuel in subpart D or the later registration of a fuel is between October 1 and December 31, no report will be required for the period to the end of that year.

(b) *Additive manufacturers.* Additive manufacturers shall submit to the Administrator a report annually for each registered additive providing additional data and information as specified in paragraphs (c) and (d) in the designation of the additive in subpart D. Additive manufacturers shall also report annually the volume of each additive produced. Reports shall be submitted on or before March 31 for the preceding year or part thereof on forms supplied by the Administrator upon request. If the date prescribed for a particular additive in subpart D or the later registration of an additive is between October 1 and December 31, no report will be required for the period to the end of that year. These periodic reports shall not, however, be required for any additive that is:

(1) An additive registered under another name,

(2) A blend or mixture of two or more registered additives, or

(3) A blend or mixture of one or more registered additives with one or more substances containing only carbon and/or hydrogen.

§79.6 Requirement for testing.

Provisions regarding testing that is required for registration of a designated fuel or fuel additive are contained in subpart F of this part.

[59 FR 33092, June 27, 1994]

§79.7 Samples for test purposes.

When the Administrator requires for test purposes a fuel or additive which is not readily available in the open market, he may request the manufacturer of such fuel or additive to furnish a sample in a reasonable quantity. The fuel or additive manufacturer shall comply with such request within 30 days.

§79.8 Penalties.

Any person who violates section 211(a) of the Act or who fails to furnish any information or conduct any tests required under this part shall be liable to the United States for a civil penalty of not more than the sum of $25,000 for every day of such violation and the amount of economic benefit or savings resulting from the violation. Civil penalties shall be assessed in accordance with paragraphs (b) and (c) of section 205 of the Act.

[58 FR 65554, Dec. 15, 1993]

Subpart B—Fuel Registration Procedures

§79.10 Application for registration by fuel manufacturer.

Any manufacturer of a designated fuel who wishes to register that fuel shall submit an application for registration including all of the information set forth in §79.11. If the manufacturer produces more than one grade or brand of a designated fuel, a manufacturer may include more than one grade or brand in a single application, provided that the application includes all information required for registration of each such grade or brand by this part. Each application shall be signed by the fuel manufacturer and shall be submitted on such forms as the Administrator will supply on request.

[59 FR 33092, June 27, 1994]

§79.11 Information and assurances to be provided by the fuel manufacturer.

Each application for registration submitted by the manufacturer of a designated fuel shall include the following:

(a) The commercial identifying name of each additive that will or may be used in a designated fuel subsequent to the date prescribed for such fuel in subpart D;

(b) The name of the additive manufacturer of each additive named;

(c) The range of concentration of each additive named, as follows:

(1) In the case of an additive which has been or is being used in the designated fuel, the range during any 3-month or longer period prior to the date of submission;

(2) In the case of an additive which has not been used in the designated fuel, the expected or estimated range;

(d) The purpose-in-use of each additive named;

(e) The description (or identification, in the case of a generally accepted method) of a suitable analytical technique (if one is known) that can be used to detect the presence of each named additive in the designated fuel and/or to measure its concentration therein;

(f) Such other data and information as are specified in the designation of the fuel in subpart D;

(g) Assurances that the fuel manufacturer will notify the Administrator in writing and within a reasonable time of any change in:

(1) The name of any additive previously reported;

(2) The name of the manufacturer of any additive being used;

(3) The purpose-in-use of any additive;

(4) Information submitted pursuant to paragraph (e) of this section;

(h) Assurances that the fuel manufacturer will not represent, directly or indirectly, in any notice, circular, letter, or other written communication, or any written, oral, or pictorial notice or other announcement in any publication or by radio or television, that registration of the fuel constitutes endorsement, certification, or approval by any agency of the United States;

(i) The manufacturer of any fuel which will be sold, offered for sale, or introduced into commerce for use in motor vehicles manufactured after model year 1974 shall demonstrate that the fuel is substantially similar to any fuel utilized in the certification of any 1975 or subsequent model year vehicle or engine, or that the manufacturer has obtained a waiver under 42 U.S.C. 7545(f)(4); and

(j) The manufacturer shall submit, or shall reference prior submissions, including all of the test data and other information required prior to registration of the fuel by the provisions of subpart F of this part.

[40 FR 52011, Nov. 7, 1975, as amended at 59 FR 33092, June 27, 1994]

§ 79.12 Determination of noncompliance.

If the Administrator determines that an applicant for registration of a designated fuel has failed to submit all of the information required by § 79.11, or determines within the applicable period provided for Agency review that the applicant has not satisfactorily completed any testing which is required prior to registration of the fuel by any provision of subpart F of this part, he shall return the application to the manufacturer, along with an explanation of all deficiencies in the required information.

[59 FR 33093, June 27, 1994]

§ 79.13 Registration.

(a) If the Administrator determines that a manufacturer has submitted an application for registration of a designated fuel which includes all of the information and assurances required by § 79.11 and has satisfactorily completed all of the testing required by subpart F of this part, the Administrator shall promptly register the fuel and notify the fuel manufacturer of such registration.

(b) The Administrator shall maintain a list of registered fuels, which shall be available to the public upon request.

[40 FR 52011, Nov. 7, 1975, as amended at 41 FR 21324, May 25, 1976; 59 FR 33093, June 27, 1994]

§ 79.14 Termination of registration of fuels.

Registration may be terminated by the Administrator if the fuel manufacturer requests such termination in writing.

Subpart C—Additive Registration Procedures

§ 79.20 Application for registration by additive manufacturer.

Any manufacturer of a designated fuel additive who wishes to register that additive shall submit an application for registration including all of

the information set forth in §79.21. Each application shall be signed by the fuel additive manufacturer and shall be submitted on such forms as the Administrator will supply on request.

[59 FR 33093, June 27, 1994]

§79.21 Information and assurances to be provided by the additive manufacturer.

Each application for registration submitted by the manufacturer of a designated fuel additive shall include the following:

(a) The chemical composition of the additive with the methods of analysis identified, except that

(1) If the chemical composition is not known, full disclosure of the chemical process of manufacture will be accepted in lieu thereof;

(2) In the case of an additive for engine oil, only the name, percentage by weight, and method of analysis of each element in the additive are required provided, however, that a percentage figure combining the percentages of carbon, hydrogen, and/or oxygen may be provided unless the breakdown into percentages for these individual elements is already known to the registrant.

(3) In the case of a purchased component, only the name, manufacturer, and percent by weight of such purchased component are required if the manufacturer of the component will, upon request, furnish the Administrator with the chemical composition thereof.

(b) The chemical structure of each compound in the additive if such structure is known and is not adequately specified by the name given under ''chemical composition.'' Nominal identification is adequate if mixed isomers are present.

(c) The description (or identification, in the case of a generally accepted method) of a suitable analytical technique (if one is known) that can be used to detect the presence of the additive in any fuel named in the designation and/or to measure its concentration therein.

(d) The specific types of fuels designated under §79.32 for which the fuel additive will be sold, offered for sale, or introduced into commerce, and the fuel additive manufacturer's recommended range of concentration and purpose-in-use for each such type of fuel.

(e) Such other data and information as are specified in the designation of the additive in subpart D.

(f) Assurances that any change in information submitted pursuant to (1) paragraphs (a), (b), (c), and (d) of this section will be provided to the Administrator in writing within 30 days of such change; and (2) paragraph (e) of this section as provided in §79.5(b).

(g) Assurances that the additive manufacturer will not represent, directly or indirectly, in any notice, circular, letter, or other written communication or any written, oral, or pictorial notice or other announcement in any publication or by radio or television, that registration of the additive constitutes endorsement, certification, or approval by any agency of the United States.

(h) The manufacturer of any fuel additive which will be sold, offered for sale, or introduced into commerce for use in any type of fuel intended for use in motor vehicles manufactured after model year 1974 shall demonstrate that the fuel additive, when used at the recommended range of concentration, is substantially similar to any fuel additive included in a fuel utilized in the certification of any 1975 or subsequent model year vehicle or engine, or that the manufacturer has obtained a waiver under 42 U.S.C. 7545(f)(4).

(i) The manufacturer shall submit, or shall reference prior submissions, including all of the test data and other information required prior to registration of the fuel additive by the provisions of subpart F of this part.

[40 FR 52011, Nov. 7, 1975, as amended at 41 FR 21324, May 25, 1976; 59 FR 33093, June 27, 1994]

§79.22 Determination of noncompliance.

If the Administrator determines that an applicant for registration of a designated fuel additive has failed to submit all of the information required by §79.21, or determines within the applicable period provided for Agency review that the applicant has not satisfactorily completed any testing which is required prior to registration of the

fuel additive by any provision of subpart F of this part, he shall return the application to the manufacturer, along with an explanation of all deficiencies in the required information.

[59 FR 33093, June 27, 1994]

§ 79.23 Registration.

(a) If the Administrator determines that a manufacturer has submitted an application for registration of a designated fuel additive which includes all of the information and assurances required by § 79.21 and has satisfactorily completed all of the testing required by subpart F of this part, the Administrator shall promptly register the fuel additive and notify the fuel manufacturer of such registration.

(b) The Administrator shall maintain a list of registered additives, which shall be available to the public upon request.

[40 FR 52011, Nov. 7, 1975, as amended at 41 FR 21324, May 25, 1976; 59 FR 33093, June 27, 1994]

§ 79.24 Termination of registration of additives.

Registration may be terminated by the Administrator if the additive manufacturer requests such termination in writing.

Subpart D—Designation of Fuels and Additives

§ 79.30 Scope.

Fuels and additives designated and dates prescribed by the Administrator for the registration of such fuels and additives, pursuant to section 211 of the Act, are listed in this subpart. In addition, specific informational requirements under §§ 79.11(f) and 79.21(e) are set forth for each designated fuel or additive. Additional fuels and/or additives may be designated and pertinent dates and additional specific informational requirements prescribed as the Administrator deems advisable.

§ 79.31 Additives.

(a) All additives produced or sold for use in motor vehicle gasoline and/or motor vehicle diesel fuel are hereby designated. The Act defines the term ''motor vehicle'' to mean any self-propelled vehicle designed for transporting persons or property on a street or highway. For purposes of this registration, however, additives specifically manufactured and marketed for use in motorcycle fuels are excluded.

(b) All designated additives must be registered by July 7, 1976.

(c) In accordance with §§ 79.5(b) and 79.21(e), and to the extent such information is known to the additive manufacturer as a result of testing conducted for reasons other than additive registration or reporting purposes, the additive manufacturer shall furnish the highest, lowest, and average values of the impurities in each designated additive, if greater than 0.1 percent by weight. The methods of analysis in making the determinations shall also be given.

(d) In accordance with §§ 79.5(b) and 79.21(e), and to the extent such information is known to the additive manufacturer, he shall furnish summaries of any information developed by or specifically for him concerning the following items:

(1) Mechanisms of action of the additive;

(2) Reactions between the additive and the fuels listed in paragraph (a) of this section;

(3) Identification and measurement of the emission products of the additive when used in the fuels listed in paragraph (a) of this section;

(4) Effects of the additive on all emissions;

(5) Toxicity and any other public health or welfare effects of the emission products of the additive;

(6) Effects of the emission products of the additive on the performance of emission control devices/systems. Such submissions shall be accompanied by a description of the test procedures used in obtaining the information. Information will be considered to be known to the additive manufacturer if a report thereon has been prepared and circulated or distributed outside the research department or division.

(Secs. 211, 301(a), Clean Air Act as amended (40 U.S.C. 7545, 7601(a)))

[40 FR 52011, Nov. 7, 1975, as amended at 41 FR 21324, May 25, 1976; 43 FR 28490, June 30, 1978; 59 FR 33093, June 27, 1994]

§79.32 Motor vehicle gasoline.

(a) The following fuels commonly or commercially known or sold as motor vehicle gasoline are hereby individually designated:

(1) Motor vehicle gasoline, unleaded—motor vehicle gasoline that contains no more than 0.05 gram of lead per gallon;

(2) Motor vehicle gasoline, leaded, premium—motor vehicle gasoline that contains more than 0.05 gram of lead per gallon and is sold as ''premium;''

(3) Motor vehicle gasoline, leaded, non-premium—motor vehicle gasoline that contains more than 0.05 gram of lead per gallon but is not sold as ''premium.''

The Act defines the term ''motor vehicle'' to mean any self-propelled vehicle designed for transporting persons or property on a street or highway. For purposes of this registration, however, gasoline specifically blended and marketed for motorcycles is excluded.

(b) All designated motor vehicle gasolines must be registered by September 7, 1976.

(c) In accordance with §§79.5(a)(2) and 79.11(f), and to the extent such information is known to the fuel manufacturer as a result of testing conducted for reasons other than fuel registration or reporting purposes, the fuel manufacturer shall furnish the data listed below. The highest, lowest, and average values of the listed characteristics/properties are to be reported. For initial registration, data shall be given for any 3-month or longer period prior to the date of submission. For annual reports thereafter, data shall be for the calendar year, except that if the first required annual report covers a period of less than a year, the data may be for such shorter period.

(1) Hydrocarbon composition (aromatic content, olefin content, saturate content), with the methods of analysis identified;

(2) Polynuclear organic material content, sulfur content, and trace element content, with the methods of analysis identified;

(3) Reid vapor pressure;

(4) Distillation temperatures (10 percent point, end point);

(5) Research octane number and motor octane number.

(d) In accordance with §§79.5(a)(2) and 79.11(f), and to the extent such information is known to the fuel manufacturer, he shall furnish summaries of any information developed by or specifically for him concerning the following items:

(1) Mechanisms of action of each additive he reports;

(2) Reactions between such additives and motor vehicle gasoline;

(3) Identification and measurement of the emission products of such additives when used in motor vehicle gasoline;

(4) Effects of such additives on all emissions;

(5) Toxicity and any other public health or welfare effects of the emission products of such additives;

(6) Effects of the emission products of such additives on the performance of emission control devices/systems. Such submissions shall be accompanied by a description of the test procedures used in obtaining the information. Information will be considered to be known to the fuel manufacturer if a report thereon has been prepared and circulated or distributed outside the research department or division.

[40 FR 52011, Nov. 7, 1975, as amended at 41 FR 21324, May 25, 1976]

§79.33 Motor vehicle diesel fuel.

(a) The following fuels commonly or commercially known or sold as motor vehicle diesel fuel are hereby individually designated:

(1) Motor vehicle diesel fuel, grade 1–D;

(2) Motor vehicle diesel fuel, grade 2–D.

The Act defines the term ''motor vehicle'' to mean any self-propelled vehicle designed for transporting persons or property on a street or highway.

(b) All designated motor vehicle diesel fuels must be registered within 12 months after promulgation of this part.

(c) In accordance with §§79.5(a)(2) and 79.11(f), and to the extent such information is known to the fuel manufacturer

as a result of testing conducted for reasons other than fuel registration or reporting purposes, the fuel manufacturer shall furnish the data listed below. The highest, lowest, and average values of the listed characteristics/properties are to be reported. For initial registration, data shall be given for any 3-month or longer period prior to the date of submission. For annual reports thereafter, data shall be for the calendar year, except that if the first required annual report covers a period of less than a year, the data may be for such shorter period.

(1) Hydrocarbon composition (aromatic content, olefin content, saturate content), with the methods of analysis identified;

(2) Polynuclear organic material content, sulfur content, and trace element content, with the methods of analysis identified;

(3) Distillation temperatures (90 percent point, end point);

(4) Cetane number or cetane index;

(d) In accordance with §§ 79.5(a)(2) and 79.11(f), and to the extent such information is known to the fuel manufacturer, he shall furnish summaries of any information developed by or specifically for him concerning the following items:

(1) Mechanisms of action of each additive he reports;

(2) Reactions between such additives and motor vehicle diesel fuel;

(3) Identification and measurement of the emission products of such additives when used in motor vehicle diesel fuel;

(4) Effects of such additives on all emissions;

(5) Toxicity and any other public health or welfare effects of the emission products of such additives.

Such submission shall be accompanied by a description of the test procedures used in obtaining the information. Information will be considered to be known to the fuel manufacturer if a report thereon has been prepared and circulated or distributed outside the research department or division.

Subpart E—[Reserved]

Subpart F—Testing Requirements for Registration

SOURCE: 59 FR 33093, June 27, 1994, unless otherwise noted.

§ 79.50 Definitions.

The definitions listed in this section apply only to subpart F of this part.

Additive/base fuel mixture means the mixture resulting when a fuel additive is added in specified proportion to the base fuel of the fuel family to which the additive belongs.

Aerosol additive means a chemical mixture in aerosol form generally used as a motor vehicle engine starting aid or carburetor cleaner and not recommended to be placed in the fuel tank.

Aftermarket fuel additive means a product which is added by the end-user directly to fuel in a motor vehicle or engine to modify the performance or other characteristics of the fuel, the engine, or its emissions.

Atypical element means any chemical element found in a fuel or additive product which is not allowed in the baseline category of the associated fuel family, and an ''atypical fuel or fuel additive'' is a product which contains such an atypical element.

Base fuel means a generic fuel formulated from a set of specifications to be representative of a particular fuel family.

Basic emissions means the total hydrocarbons, carbon monoxide, oxides of nitrogen, and particulates occurring in motor vehicle or engine emissions.

Bulk fuel additive means a product which is added to fuel at the refinery as part of the original blending stream or after the fuel is transported from the refinery but before the fuel is purchased for introduction into the fuel tank of a motor vehicle.

Emission characterization means the determination of the chemical composition of emissions.

Emission generation means the operation of a vehicle or engine or the vaporization of a fuel or additive/fuel mixture under controlled conditions

for the purpose of creating emissions to be used for testing purposes.

Emission sampling means the removal of a fraction of collected emissions for testing purposes.

Emission speciation means the analysis of vehicle or engine emissions to determine the individual chemical compounds which comprise those emissions.

Engine Dynamometer Schedule (EDS) means the transient engine speed versus torque time sequence commonly used in heavy-duty engine evaluation. The EDS for heavy-duty diesel engines is specified in 40 CFR part 86, appendix I(f)(2).

Evaporative Emission Generator (EEG) means a fuel tank or vessel to which heat is applied to cause a portion of the fuel to evaporate at a desired rate.

Evaporative emissions means chemical compounds emitted into the atmosphere by vaporization of contents of a fuel or additive/fuel mixture.

Evaporative fuel means a fuel which has a Reid Vapor Pressure (RVP, pursuant to 40 CFR part 80, appendix ''E'') of 2.0 pounds per square inch or greater and is not supplied to motor vehicle engines by way of sealed containment and delivery systems.

Evaporative fuel additive means a fuel additive which, when mixed with its specified base fuel, causes an increase in the RVP of the base fuel by 0.4 psi or more relative to the RVP of the base fuel alone and results in an additive/base fuel mixture whose RVP is 2.0 psi, or greater. Excluded from this definition are fuel additives used with fuels which are supplied to motor vehicle engines by way of sealed containment and delivery systems.

Federal Test Procedure (FTP) means the body of exhaust and evaporative emissions test procedures described in 40 CFR 86 for the certification of new motor vehicles to Federal motor vehicle emissions standards.

Fuel family means a set of fuels and fuel additives which share basic chemical and physical formulation characteristics and can be used in the same engine or vehicle.

Manufacturer means a person who is a fuel manufacturer or additive manufacturer as defined in § 79.2 (d) and (f).

Nitrated polycyclic aromatic hydrocarbons (NPAH) means the class of compounds whose molecular structure includes two or more aromatic rings and contains one or more nitrogen substitutions.

Non-catalyzed emissions means exhaust emissions not subject to an effective aftertreatment device such as a functional catalyst or particulate trap.

Oxygenate compound means an oxygen-containing, ashless organic compound, such as an alcohol or ether, which may be used as a fuel or fuel additive.

Polycyclic aromatic hydrocarbons (PAH) means the class of hydrocarbon compounds whose molecular structure includes two or more aromatic rings.

Relabeled additive means a fuel additive which is registered by its original manufacturer with EPA and is also registered and sold, unchanged in composition, under a different label and/or by a different entity.

Semi-volatile organic compounds means that fraction of gaseous combustion emissions which consists of compounds with greater than twelve carbon atoms and can be trapped in sorbent polymer resins.

Urban Dynamometer Driving Schedule (UDDS) means the 1372 second transient speed driving sequence used by EPA to simulate typical urban driving. The UDDS for light-duty vehicles is described in 40 CFR part 86, appendix I(a).

Vapor phase means the gaseous fraction of combustion emissions.

Vehicle classes/subclasses means the divisions of vehicle groups within a vehicle type, including light-duty vehicles, light-duty trucks, and heavy-duty vehicles as specified in 40 CFR part 86.

Vehicle type means the divisions of motor vehicles according to combustion cycle and intended fuel class, including, but not necessarily limited to, Otto cycle gasoline-fueled vehicles, Otto cycle methanol-fueled vehicles, diesel cycle diesel-fueled vehicles, and diesel cycle methanol-fueled vehicles.

Whole emissions means all components of unfiltered combustion emissions or evaporative emissions.

§ 79.51 General requirements and provisions.

(a) *Overview of requirements.* (1) All manufacturers of fuels and fuel additives that are designated for registration under this part are required to comply with the requirements of subpart F of this part either on an individual basis or as a participant in a group of manufacturers of the same or similar fuels and fuel additives, as defined in § 79.56. If manufacturers elect to comply by participation in a group, each manufacturer continues to be individually subject to the requirements of subpart F of this part, and responsible for testing under this subpart. Each manufacturer, subject to the provisions for group applications in § 79.51(b) and the special provisions in § 79.58, shall submit all Tier 1 and Tier 2 information required by §§ 79.52, 79.53 and 79.59 for each fuel or additive, except that the Tier 1 emission characterization requirements in § 79.52(b) and/or the Tier 2 testing requirements in § 79.53 may be satisfied by adequate existing information pursuant to the Tier 1 literature search requirements in § 79.52(d). The adequacy of existing information to serve in compliance with specific Tier 1 and/or Tier 2 requirements shall be determined according to the criteria and procedures specified in §§ 79.52(b) and 79.53 (c) and (d). In all cases, EPA reserves the right to require, based upon the information contained in the application or any other information available to the Agency, that manufacturers conduct additional testing of any fuel or additive (or fuel/additive group) if EPA determines that there is inadequate information upon which to base regulatory decisions for such product(s). In any case where EPA determines that the requirements of Tiers 1 and 2 have been satisfied but that further testing is required, the provisions of Tier 3 (§ 79.54) shall apply.

(2) Laboratory facilities shall perform testing in compliance with Good Laboratory Practice (GLP) requirements as those requirements apply to inhalation toxicology studies. All studies shall be monitored by the facilities' Quality Assurance units (as specified in § 79.60).

(b) *Group Applications.* Subject to the provisions of § 79.56 (a) through (c), EPA will consider any testing requirements of this subpart to have been met for any fuel or fuel additive when a fuel or fuel additive which meets the criteria for inclusion in the same group as the subject fuel or fuel additive has met that testing requirement, provided that all fuels and additives must be individually registered as described in § 79.59(b). For purposes of this subpart, a determination of which group contains a particular fuel or additive will be made pursuant to the provisions of § 79.56 (d) and (e). Nothing in this subsection (b) shall be deemed to require a manufacturer to rely on another manufacturer's testing.

(c) *Application Procedures and Dates.* Each application submitted in compliance with this subpart shall be signed by the manufacturer of the designated fuel or additive, or by the manufacturer's agent, and shall be submitted to the address and in the format prescribed in § 79.59. A manufacturer who chooses to comply as part of a group pursuant to § 79.56 shall be covered by the group's joint application. Subject to any modifications pursuant to the special provisions in §§ 79.51(f) or 79.58, the schedule for compliance with the requirements of this subpart is as follows:

(1) *Fuels and fuel additives with existing registrations.* (i) The manufacturer of a fuel or fuel additive product which, pursuant to subpart B or C of this part, is registered as of May 27, 1994 must submit the additional basic registration data specified in § 79.59(b) before November 28, 1994.

(ii) For these products, the manufacturer must also satisfy the requirements and time schedules in either of the following paragraphs (c)(1)(ii) (A) or (B) of this section:

(A) Within May 27, 1997, all applicable Tier 1 and Tier 2 requirements must be submitted to EPA, pursuant to §§ 79.52, 79.53, and 79.59; or

(B) Within May 27, 1997, all applicable Tier 1 requirements (pursuant to §§ 79.52 and 79.59), plus evidence of a contract with a qualified laboratory (or other suitable arrangement) for completion of all applicable Tier 2 requirements, must be submitted to EPA. For

this purpose, a qualified laboratory is one which can demonstrate the capabilities and credentials specified in § 79.53(c)(1). In addition, within May 26, 2000, all applicable Tier 2 requirements (pursuant to §§ 79.53 and 79.59) must be submitted to EPA.

(iii) In the case of such fuels and fuel additives which, pursuant to applicable special provisions in § 79.58, are not subject to Tier 2 requirements, all other requirements (except Tier 3) must be submitted to EPA before May 27, 1997.

(iv) In the event that Tier 3 testing is also required (under § 79.54), EPA shall determine an appropriate timeline for completion of the additional requirements and shall communicate this schedule to the manufacturer according to the provisions of § 79.54(b).

(v) The manufacturer may at any time modify an existing fuel registration by submitting a request to EPA to add or delete a bulk additive to the existing registration information for such fuel product, provided that any additional additive must be registered by EPA for use in the specific fuel family to which the fuel product belongs. However, the addition or deletion of a bulk additive to a fuel registration may effect the grouping of such registered fuel under the criteria of § 79.56, and thus may effect the testing responsibilities of the fuel manufacturer under this subpart.

(2) *Registrable fuels and fuel additives.* (i) A fuel product which is not registered pursuant to subpart B of this part as of May 27, 1994 shall be considered registrable if, under the criteria established by § 79.56, the fuel can be enrolled in the same fuel/additive group with one or more currently registered fuels. A fuel additive product which is not registered for a specific type of fuel pursuant to subpart C of this part as of May 27, 1994 shall be considered registrable for that type of fuel if, under the criteria established by § 79.56, the fuel/additive mixture resulting from use of the additive product in the specific type of fuel can be enrolled in the same fuel/additive group with one or more currently registered fuels or bulk fuel additives. For the purpose of this determination, currently registered fuels and bulk additives are those with existing registrations as of the date on which EPA receives the basic registration data (pursuant to § 79.59(b)) for the product in question.

(ii) A manufacturer seeking to register under subpart B of this part a fuel product which is deemed registrable under this section, or to register under subpart C of this part a fuel additive product for a specific type of fuel for which it is deemed registrable under this section, shall submit the basic registration data (pursuant to § 79.59(b)) for that product as part of the application for registration. If the Administrator determines that the product is registrable under this section, then the Administrator shall promptly register the product, provided that the applicant has satisfied all of the other requirements for registration under subpart B or subpart C of this part, and contingent upon satisfactory submission of required information under paragraph (c)(2)(iii) of this section.

(iii) Registration of a registrable fuel or additive shall be subject to the same requirements and compliance schedule as specified in paragraph (c)(1) of this section for existing fuels and fuel additives. Accordingly, manufacturers of registrable fuels or additives may be granted and may retain registration for such products only if any applicable and due Tier 1, 2, and 3 requirements have also been satisfied by either the manufacturer of the product or the fuel/additive group to which the product belongs.

(3) *New fuels and fuel additives.* A fuel product shall be considered new if it is not registered pursuant to subpart B of this part as of May 27, 1994 and if, under the criteria established by § 79.56, it cannot be enrolled in the same fuel/additive group with one or more currently registered fuels. A fuel additive product shall be considered new with respect to a specific type of fuel if it is not expressly registered for that type of fuel pursuant to subpart C of this part as of May 27, 1994 and if, under the criteria established by § 79.56, the fuel/additive mixture resulting from use of the additive product in the specific type of fuel cannot be enrolled in the same fuel/additive group with one or more currently registered fuels or bulk fuel additives. For the purpose of this

determination, currently registered fuels and bulk additives are those with existing registrations as of the date on which EPA receives the basic registration data (pursuant to § 79.59(b)) for the product in question. For such new product, the manufacturer must satisfactorily complete all applicable Tier 1 and Tier 2 requirements, followed by any Tier 3 testing which the Administrator may require, before registration will be granted.

(d) *Notifications.* Upon receipt of a manufacturer's (or group's) submittal in compliance with the requirements of this subpart, EPA will notify such manufacturer (or group) that the application has been received and what, if any, information, testing, or retesting is necessary to bring the application into compliance with the requirements of this subpart. EPA intends to provide such notification of receipt in a timely manner for each such application.

(1) *Registered fuel and fuel additive notification.* (i) The manufacturer of a registered fuel or fuel additive product who is notified that the submittal for such product contains adequate information pursuant to the Tier 1 and Tier 2 testing and reporting requirements (§§ 79.52, 79.53, and 79.59 (a) through (c)) may continue to sell, offer for sale, or introduce into commerce the registered product as permitted by the existing registration for the product under § 79.4.

(ii) If the manufacturer of a registered fuel or fuel additive product is notified that testing or retesting is necessary to bring the Tier 1 and/or Tier 2 submittal into compliance, the continued sale or importation of the product shall be conditional upon satisfactorily completing the requirements within the time frame specified in paragraph (c)(1) of this section.

(iii) EPA intends to notify the manufacturer of the adequacy of the submitted data within two years of EPA's receipt of such data. However, EPA retains the right to require that adequate data be submitted to EPA if, upon subsequent review, EPA finds that the original Tier 1 and/or Tier 2 submittal is not consistent with the requirements of this subpart. If EPA does not notify the manufacturer of the adequacy of the Tier 1 and/or Tier 2 data within two years, EPA will not hold the manufacturer liable for penalties for violating this rule for the period beginning when the data was due until the time EPA notifies the manufacturer of the violation.

(iv) If the manufacturer of a registered fuel or fuel additive product is notified (pursuant to § 79.54(b)) that Tier 3 testing is required for its product, then the manufacturer may continue to sell, offer for sale, introduce into commerce the registered product as permitted by the existing registration for the product under § 79.4. However, if the manufacturer fails to complete the specified Tier 3 requirements within the specified time, the registration of the product will be subject to cancellation under § 79.51(f)(6).

(v) EPA retains the right to require additional Tier 3 testing pursuant to the procedures in § 79.54.

(2) *New fuel and fuel additive notification.* (i) Within six months following its receipt of the Tier 1 and Tier 2 submittal for a new product (as defined in paragraph (c)(3) of this section), EPA shall notify the manufacturer of the adequacy of such submittal in compliance with the requirements of §§ 79.52, 79.53, and 79.59 (a) through (c).

(A) If EPA notifies the manufacturer that testing, retesting, or additional information is necessary to bring the Tier 1 and Tier 2 submittal into compliance, the manufacturer shall remedy all inadequacies and provide Tier 3 data, if required, before EPA shall consider the requirements for registration to have been met for the product in question.

(B) If EPA does not notify the manufacturer of the adequacy of the Tier 1 and Tier 2 submittal within six months following the submittal, the manufacturer shall be deemed to have satisfactorily completed Tiers 1 and 2.

(ii) Within six months of the date on which EPA notifies the manufacturer of satisfactory completion of Tiers 1 and 2 for a new product, or within one year of the submittal of the Tier 1 and Tier 2 data (whichever is earlier), EPA shall determine whether additional testing is currently needed under the provisions of Tier 3 and, pursuant to § 79.54(b), shall notify the manufacturer of its determination.

(A) If the manufacturer of a new fuel or fuel additive product is notified that Tier 3 testing is required for such product, then EPA shall have the authority to withhold registration until the specified Tier 3 requirements have been satisfactorily completed. EPA shall determine whether the Tier 3 requirements have been met, and shall notify the manufacturer of this determination, within one year of receiving the manufacturer's Tier 3 submittal.

(B) If EPA does not notify the manufacturer of potential Tier 3 requirements within the prescribed timeframe, then additional testing at the Tier 3 level is deemed currently unnecessary and the manufacturer shall be considered to have complied with all current registration requirements for the new fuel or additive product.

(iii) Upon completion of all current Tier 1, Tier 2, and Tier 3 requirements, and submission of an application for registration which includes all of the information and assurances required by § 79.11 or § 79.21, the registration of the new fuel or additive shall be granted, and the registrant may then sell, offer for sale, or introduce into commerce the registered product as permitted by § 79.4.

(iv) Once the new product becomes registered, EPA reserves the right to require additional Tier 3 testing pursuant to the procedures specified in § 79.54.

(e) *Inspection of a testing facility*. (1) A testing facility, emissions analysis or health and/or welfare effects, shall permit an authorized employee or duly designated representative of EPA, at reasonable times and in a reasonable manner, to inspect the facility and to inspect (and in the case of records also to copy) all records and specimens required to be maintained regarding studies to which this rule applies. The records inspection and copying requirements shall not apply to quality assurance unit records of findings and problems, or to actions recommended and taken, except the EPA may seek production of these records in litigation or informal hearings.

(2) EPA will not consider reliable for purposes of showing that a test substance does or does not present a risk of injury to health or the environment any data developed by a testing facility or sponsor that refuses to permit inspection in accordance with this section. The determination that a study will not be considered reliable does not, however, relieve the sponsor of a required test of any obligation under any applicable statute or regulation to submit the results of the study to EPA.

(3) Effects of non-compliance. Pursuant to sections 114, 208, and 211(d) of the CAA, it shall be a violation of this section and a violation of 40 CFR part 79, subpart F to deny entry to an authorized employee or duly designated representative of EPA for the purpose of auditing a testing facility or test data.

(f) *Penalties and Injunctive Relief*. (1) Any person who violates these regulations shall be subject to a civil penalty of up to $25,000 for each and every day of the continuance of the violation and the economic benefit or savings resulting from the violation. Action to collect such civil penalties shall be commenced in accordance with paragraph (b) of section 205 of the Clean Air Act or assessed in accordance with paragraph (c) of section 205 of the Clean Air Act, 42 U.S.C. 7524 (b) and (c).

(2) Under section 205(b) of the CAA, the Administrator may commence a civil action for violation of this subpart in the district court of the United States for the district in which the violation is alleged to have occurred or in which the defendant resides or has a principal place of business.

(3) Under section 205(c) of the CAA, the Administrator may assess a civil penalty of $25,000 for each and every day of the continuance of the violation and the economic benefit or savings resulting from the violation, except that the maximum penalty assessment shall not exceed $200,000, unless the Administrator and the Attorney General jointly determine that a matter involving a larger penalty amount is appropriate for administrative penalty assessment. Any such determination by the Administrator and the Attorney General shall not be subject to judicial review.

(4) The Administrator may, upon application by the person against whom any such penalty has been assessed, remit or mitigate, with or without conditions, any such penalty.

(5) The district courts of the United States shall have jurisdiction to compel the furnishing of information and the conduct of tests required by the Administrator under these regulations and to award other appropriate relief. Actions to compel such actions shall be brought by and in the name of the United States. In any such action, subpoenas for witnesses who are required to attend a district court in any district may run into any other district.

(6) Cancellation.

(i) The Administrator of EPA may issue a notice of intent to cancel a fuel or fuel additive registration if the Administrator determines that the registrant has failed to submit in a timely manner any data required to maintain registration under this part or under section 211(b) or 211(e) of the Clean Air Act.

(ii) Upon issuance of a notice of intent to cancel, EPA will forward a copy of the notice to the registrant by certified mail, return receipt requested, at the address of record given in the registration, along with an explanation of the reasons for the proposed cancellation.

(iii) The registrant will be afforded 60 days from the date of receipt of the notice of intent to cancel to submit written comments concerning the notice, and to demonstrate or achieve compliance with the specific data requirements which provide the basis for the proposed cancellation. If the registrant does not respond in writing within 60 days from the date of receipt of the notice of intent to cancel, the cancellation of the registration shall become final by operation of law and the Administrator shall notify the registrant of such cancellation. If the registrant responds in writing within 60 days from the date of receipt of the notice of intent to cancel, the Administrator shall review and consider all comments submitted by the registrant before taking final action concerning the proposed cancellation. The registrants' communications should be sent to the following address: Director, Field Operations and Support Division, 6406J—Fuel/Additives Registration, U.S. Environmental Protection Agency, 401 M Street SW., Washington, DC 20460.

(iv) As part of a written response to a notice of intent to cancel, a registrant may request an informal hearing concerning the notice. Any such request shall state with specificity the information the registrant wishes to present at such a hearing. If an informal hearing is requested, EPA shall schedule such a hearing within 60 days from the date of receipt of the request. If an informal hearing is held, the subject matter of the hearing shall be confined solely to whether or not the registrant has complied with the specific data requirements which provide the basis for the proposed cancellation. If an informal hearing is held, the designated presiding officer may be any EPA employee, the hearing procedures shall be informal, and the hearing shall not be subject to or governed by 40 CFR part 22 or by 5 U.S.C. 554, 556, or 557. A verbatim transcript of each informal hearing shall be kept and the Administrator shall consider all relevant evidence and arguments presented at the hearing in making a final decision concerning a proposed cancellation.

(v) If a registrant who has received a notice of intent to cancel submits a timely written response, and the Administrator decides after reviewing the response and the transcript of any informal hearing to cancel the registration, the Administrator shall issue a final cancellation order, forward a copy of the cancellation order to the registrant by certified mail, and promptly publish the cancellation order in the FEDERAL REGISTER. Any cancellation order issued after receipt of a timely written response by the registrant shall become legally effective five days after it is published in the FEDERAL REGISTER.

(g) *Modification of Regulation*. (1) In special circumstances, a manufacturer subject to the registration requirements of this rule may petition the Administrator to modify the mandatory testing requirements in the test standard for any test required by this rule by application to Director, Field Operations and Support Division, at the address in paragraph (f)(6)(iii) of this section.

(i) Such request shall be made as soon as the test sponsor is aware that

the modification is necessary, but in no event shall the request be made after 30 days following the event which precipitated the request.

(ii) Upon such request, the Administrator may, in circumstances which are outside the control of the manufacturer(s) or his/their agent and which could not have been reasonably foreseen or avoided, modify the mandatory testing requirements in the rule if such requirements are infeasible.

(iii) If the Administrator determines that such modifications would not significantly alter the scope of the test, EPA will not ask for public comment before approving the modification. The Administrator will notify the test sponsor by certified mail of the response to the request. EPA will place copies of each application and EPA response in the public docket. EPA will publish a notice in the FEDERAL REGISTER annually describing such changes which have occurred during the previous year. Until such FEDERAL REGISTER notice is published, any modification approved by EPA shall apply only to the person or group who requested the modification; EPA shall state the applicability of each modification in such notice.

(iv) Where, in EPA's judgment, the requested modification of a test standard would significantly change the scope of the test, EPA will publish a notice in the FEDERAL REGISTER requesting comment on the request and proposed modification. However, EPA may approve a requested modification of a test standard without first seeking public comment if necessary to preserve the validity of an ongoing test undertaken in good faith.

(2) [Reserved]

(h) *Special Requirements for Additives.* An additive which is a direct test subject, either because it is the chosen representative of a group or because it is not a member of a group, is subject to the following rules:

(1) All required emission characterization and health effects testing procedures shall be performed on the mixture which results when the additive is combined with the base fuel for the appropriate fuel family (as specified in § 79.55) at the maximum concentration recommended by the additive manufacturer pursuant to § 79.21(d). This combination shall be known as the additive/base fuel mixture.

(i) The appropriate fuel family to be utilized for the additive/base fuel mixture is the fuel family which contains the specific type(s) of fuel for which the additive is presently registered or for which the manufacturer of the additive is seeking registration.

(ii) Fuels and additives belonging to more than one fuel family.

(A) If a fuel or additive product is registered in two or more fuel families as of May 27, 1994, then the manufacturer of that product is responsible for testing (or participating in group testing of) each formulation in compliance with the requirements of this subpart for each fuel family in which the manufacturer wishes to maintain a product registration for its fuel or additive.

(B) If a fuel or additive manufacturer is seeking to register such product in two or more fuel families, then the product shall be considered, for testing and registration purposes, to be a member of each fuel family in which the manufacturer is seeking registration. The manufacturer is responsible for testing (or participating in group testing of) each formulation in compliance with the requirements of this subpart for each fuel family in which the manufacturer wishes to obtain a product registration for its fuel or additive.

(iii) In the case of the methanol fuel family, which contains two base fuels (M100 and M85 base fuels, pursuant to § 79.55(d)), the applicable base fuel is the one which represents the fuel/additive group (specified in § 79.56(e)(4)(i)(C)) containing fuels of which the most gallons are sold annually.

(iv) Aftermarket additives which are intended by the manufacturer to be added to the fuel tank only at infrequent intervals shall be applied according to the manufacturer's specifications during mileage accumulation, pursuant to § 79.57(c). However, during emission generation and testing, each tankful of fuel used must contain the fuel additive at its maximum recommended level. If the additive manufacturer believes that this maximum treatment rate will cause adverse effects to the test engine and/or that the

engine's emissions may be subject to artifacts due to overuse of the additive, then the manufacturer may submit a request to EPA for modification of this requirement and related test procedures. Such request must include objective evidence that the modification(s) are needed, along with data demonstrating the maximum concentration of the additive which may actually reach the fuel tanks of vehicles in use.

(v) Additives produced exclusively for use in #1 diesel fuel shall be tested in the diesel base fuel specified in § 79.55(c), even though that base fuel is formulated with #2 diesel fuel. If a manufacturer is concerned that emissions generated from this combination of fuel and additive are subject to artifacts due to this blending, then that manufacturer may submit a request for a modification in test procedure requirements to the EPA. Any such request must include supporting test results and suggested test modifications.

(vi) Bulk additives which are used intermittently for the direct purpose of conditioning or treating a fuel during storage or transport, or for treating or maintaining the storage, pipeline, and/or other components of the fuel distribution system itself and not the vehicle/engine for which the fuel is ultimately intended, shall, for purposes of this program, be added to the base fuel at the maximum concentration recommended by the additive manufacturer for treatment of the fuel or distribution system component. However, if the additive manufacturer believes that this treatment rate will cause adverse effects to the test engine and/or that the engine's emissions may be subject to artifacts due to overuse of the additive, then the manufacturer may submit a request to EPA for modification of this requirement and related test procedures. Such request must include objective evidence that the modification(s) are needed, along with data demonstrating the maximum concentration of the additive which may actually reach the fuel tanks of vehicles in use.

(2) EPA shall use emissions speciation and health effects data generated in the analysis of the applicable base fuel as control data for comparison with data generated for the additive/base fuel mixture.

(i) The base fuel control data may be:

(A) Generated internally as an experimental control in conjunction with testing done in compliance with registration requirements for a specific additive; or

(B) Generated externally in the course of testing different additive(s) belonging to the same fuel family, or in the testing of a base fuel serving as representative of the baseline group for the respective fuel family pursuant to § 79.56(e)(4)(i).

(ii) Control data generated using test equipment (including vehicle model and/or engine, or Evaporative Emissions Generator specifications, as appropriate) and protocols identical or nearly identical to those used in emissions and health effects testing of the subject additive/base fuel mixture would be most relevant for comparison purposes.

(iii) If an additive manufacturer chooses the same vehicle/engine to independently test the base fuel as an experimental control prior to testing the additive/base fuel mixture, then the test vehicle/engine shall undergo two mileage accumulation periods, pursuant to § 79.57(c). The initial mileage accumulation period shall be performed using the base fuel alone. After base fuel testing, and prior to testing of the additive/base fuel mixture, a second mileage accumulation period shall be performed using the additive/base fuel mixture. The procedures outlined in this paragraph shall not preclude a manufacturer from testing a base fuel and the manufacturer's additive/base fuel mixture separately in identical, or nearly identical, vehicles/engines.

(i) *Multiple Test Potential for Non-Baseline Products.* (1) When the composition information reported in the registration application or basic registration data for a gasoline or diesel product meets criteria for classification as a non-baseline product (pursuant to § 79.56(e)(3)(i)(B) or § 79.56(e)(3)(ii)(B)), then the manufacturer is responsible for testing (or participating in group testing) of a separate formulation for each reported oxygenating compound, specified class of oxygenating compounds, or other

substance which defines a separate non-baseline fuel/additive group pursuant to § 79.56(e)(4)(ii)(A) or (B). For each such substance, testing shall be performed on a mixture of the relevant substance in the appropriate base fuel, formulated according to the specifications for the corresponding group representatives in § 79.56(e)(4)(ii).

(2) When the composition information reported in the registration application or basic registration data for a non- baseline gasoline product contains a range of total oxygenate concentration-in-use which encompasses gasoline formulations with less than 1.5 weight percent oxygen as well as gasoline formulations with 1.5 weight percent oxygen or more, then the manufacturer is required to test (or participate in applicable group testing of) a baseline gasoline formulation as well as one or more non-baseline gasoline formulations as described in paragraph (h)(1) of this section.

(3) When the composition information reported in the registration application or basic registration data for a non- baseline diesel product contains a range of total oxygenate concentration-in-use which encompasses diesel formulations with less than 1.0 weight percent oxygen as well as diesel formulations with 1.0 weight percent oxygen or more, then the manufacturer is required to test (or participate in applicable group testing) of a baseline diesel formulation as well as one or more non-baseline diesel formulations as described in paragraph (h)(1) of this section.

(j) *Multiple Test Potential for Atypical Fuel Formulations.* When the composition information reported in the registration application or basic registration data for a fuel product includes more than one atypical bulk additive product (pursuant to § 79.56(e)(2)(iii)), and when these additives belong to different fuel/additive groups (pursuant to § 79.56(e)(4)(iii)), then:

(1) When such disparate additive products are for the same purpose-in-use and are not ordinarily used in the fuel simultaneously, the fuel manufacturer shall be responsible for testing (or participating in the group testing of) a separate formulation for each such additive product. Testing related to each additive product shall be performed on a mixture of the additive in the applicable base fuel, as described in paragraph (g)(1) of this section, or by participation in the costs of testing the designated representative of the fuel/additive group to which each separate atypical additive product belongs.

(2) When the disparate additive products are not for the same purpose-in-use, the fuel manufacturer shall nevertheless be responsible for testing a separate formulation for each such additive product, as described in paragraph (g)(1) of this section, if these additives are not ordinarily blended together in the same commercial formulation of the fuel.

(3) When the disparate additive products are ordinarily blended together in the same commercial formulation of the fuel, then the fuel manufacturer shall be responsible for the testing of a single test formulation containing all such simultaneously used atypical additive products. Alternatively, this responsibility can be satisfied by enrolling such fuel product in a group which includes other fuel or additive products with the same total combination of atypical elements as that occurring in the fuel product in question. If the basic registration data for the subject fuel includes any alternative additives which contain atypical elements not represented in the test formulation, then the fuel manufacturer is also responsible for testing a separate formulation for each such additional disparate additive product.

(k) *Emission Control System Testing.* If any information submitted in accordance with this subpart or any other information available to EPA shows that a fuel or fuel additive may have a deleterious effect on the performance of any emission control system or device currently in use or which has been developed to a point where in a reasonable time it would be in general use were such effect avoided, EPA may, in its judgment, require testing to determine whether such effects in fact exist. Such testing will be required in accordance with such protocols and schedules as the Administrator shall reasonably require and shall be paid for by the fuel or fuel additive manufacturer.

§ 79.52 Tier 1.

(a) *General Specifications.* Tier 1 requires manufacturers of designated fuels or fuel additives (or groups of manufacturers pursuant to § 79.56) to supply to the Administrator: the identity and concentration of certain emission products of such fuels or additives; an analysis of potential emissions exposures; and any available information regarding the health and welfare effects of the whole and speciated emissions. In addition to any information required under § 79.59 and in conformance with the reporting requirements thereof, manufacturers shall provide, pursuant to the timing provisions of § 79.51(c), the following information.

(b) *Emissions Characterization.* Manufacturers must provide a characterization of the emission products which are generated by evaporation (if required pursuant to § 79.58(b)) and by combustion of the fuel or additive/base fuel mixture in a motor vehicle. For this purpose, manufacturers may perform the characterization procedures described in this section or may rely on existing emission characterization data. To be considered adequate in lieu of performing new emission characterization procedures, the data must be the result of tests using the product in question or using a fuel or additive/base fuel mixture meeting the same grouping criteria as the product in question. In addition, the emissions must be generated in a manner reasonably similar to those described in § 79.57, and the characterization procedures must be adequately performed and documented and must give results reasonably comparable to those which would be obtained by performing the procedures described herein. Reports of previous tests must be sufficiently detailed to allow EPA to judge the adequacy of protocols, techniques, and conclusions. After the manufacturer's submittal of such data, if EPA finds that the manufacturer has relied upon inadequate test data, then the manufacturer will not be considered to be in compliance until the corresponding tests have been conducted and the results submitted to EPA.

(1) *General Provisions.*

(i) The emissions to be characterized shall be generated, collected, and stored according to the processes described in § 79.57. Characterization of combustion and evaporative emissions shall be performed separately on each emission sample collected during the applicable emission generation procedure.

(ii) As provided in § 79.57(d), if the emission generation vehicle/engine is ordinarily equipped with an emission aftertreatment device, then all requirements in this section for the characterization of combustion emissions must be completed both with and without the aftertreatment device in a functional state. The emissions shall be generated three times (on three different days) without a functional aftertreatment device and, if applicable, three times (on three different days) with a functional aftertreatment device, and each such time shall be analyzed according to the remaining provisions in this paragraph (b) of this section.

(iii) Measurement of background emissions. It is required that ambient/dilution air be analyzed for levels of background chemical species present at the time of emission sampling (for both combustion and evaporative emissions) and that background chemical species profiles be reported with emissions speciation data. Background chemical species measurement/analysis during the FTP is specified in §§ 86.109–94(c)(5) and 86.135–94 of this chapter.

(iv) Concentrations of emission products shall be reported in units of grams (g) per mile and in units of weight percent of measured total hydrocarbons.

(v) Laboratory practice must be of high quality and must be consistent with state-of-the-art methods as presented in current environmental and analytical chemistry literature. Examples of analytical procedures which may be used in conducting the emission characterization/speciation requirements of this section can be found among the references in paragraph (b)(5) of this section.

(2) Characterization of the combustion emissions shall include, for products in all fuel families (except when expressly noted in this section):

(i) Determination of the concentration of the basic emissions as follows: total hydrocarbons, carbon monoxide,

oxides of nitrogen, and particulates. Manufacturers are referred to the vehicle certification procedures in 40 CFR part 86, subparts B and D (§§ 86.101 through 86.145 and §§ 86.301 through 86.348) for guidance on the measurement of the basic emissions of interest to this subpart.

(ii) Characterization of the vapor phase of combustion emissions, as follows:

(A) Determination of the identity and concentration of individual species of hydrocarbon compounds containing 12 or fewer carbon atoms. Such characterization shall begin within 30 minutes after emission collection is completed.

(B) Determination of the identity and concentration of individual species of aldehyde and ketone compounds containing eight or fewer carbon atoms. Characterization of these emissions captured in cartridges shall be performed within two weeks if the cartridge is stored at room temperature, and one month if the cartridge is stored at 0 °C or less. If the emissions are sampled using the impinger method, the sample must be stored in a capped sample vial at 0 °C or less and characterized within one week.

(C) Determination of the identity and concentration of individual species of alcohol and ether compounds containing six or fewer carbon atoms, for those fuels and additive/base fuel mixtures which contain alcohol and/or ether compounds containing from one to six carbon atoms in the uncombusted state. For fuel and additive formulations containing alcohols or ethers with more than six carbon atoms in the uncombusted state, alcohol and ether species with that higher number of carbon atoms or less must be identified and measured in the emissions. Such characterization shall begin within four hours after emission collection is completed.

(iii) Characterization of the semivolatile and particulate phases of combustion emissions to identify and measure polycyclic aromatic compounds, as follows:

(A) Analysis for polycyclic aromatic compounds shall not be conducted at or soon after the start of a recommended engine lubricant change interval.

(B) Analysis for polycyclic aromatic hydrocarbons (PAHs) and nitrated polycyclic aromatic hydrocarbons (NPAHs), specified in paragraph (b)(2)(iii)(D) of this section, need not be done for any fuels and additives in the methane or propane fuel families, nor for fuels and additives in the atypical categories of any other fuel families, pursuant to the definitions of such families and categories in § 79.56.

(C) Analysis for poly-chlorinated dibenzodioxins and dibenzofurans (PCDD/PCDFs), specified in paragraph (b)(2)(iii)(E) of this section, is required only for fuels and additives which contain chlorine as an atypical element, pursuant to paragraph (b)(2)(iv) of this section, which requires all individual emission products containing atypical elements to be determined for atypical fuels and additives. However, manufacturers of baseline and nonbaseline fuels and fuel additives in all fuel families, except those in the methane and propane fuel families, are strongly encouraged to conduct these analyses on a voluntary basis.

(D) The analytical method used to measure species of PAHs and NPAHs should be capable of detecting at least 1 ppm (equivalent to 0.001 microgram (μg) of compound per milligram of organic extract) of these compounds in the extractable organic matter. The concentration of each individual PAH or NPAH compound identified shall be reported in units of microgram per mile. Each compound which is present at 0.001 μg per mile or more must be identified, measured, and reported. The following individual species shall be measured:

(*1*) PAHs:

(*i*) Benzo(*a*)anthracene;

(*ii*) Benzo[*b*]fluoranthene;

(*iii*) Benzo[*k*]fluoranthene;

(*iv*) Benzo(*a*)pyrene;

(*v*) Chrysene;

(*vi*) Dibenzo[*a,h*]anthracene; and

(*vii*) Indeno[1,2,3-*c,d*]pyrene.

(*2*) NPAHs:

(*i*) 7-Nitrobenzo[*a*]anthracene;

(*ii*) 6-Nitrobenzo[*a*]pyrene;

(*iii*) 6-Nitrochrysene;

(*iv*) 2-Nitrofluorene; and

(*v*) 1-Nitropyrene.

(E) The analytical method used to measure species and classes of PCDD/

PCDFs should be capable of detecting at least 1 part per trillion (ppt) (equivalent to 0.001 picogram (pg) of compound per milligram of organic extract) of these compounds in the extractable organic matter. The concentration of each individual PCDD/PCDF compound identified shall be reported in units of picograms (pg) per mile. Each compound which is present at 0.5 pg per mile or more must be identified, measured, and reported.

(*1*) With respect to measurement of PCDD/PCDFs only, the liquid extracts from the particulate and semi-volatile emissions fractions may be combined into one sample for analysis.

(*2*) The manufacturer is referred to 40 CFR part 60, appendix A, Method 23 for a protocol which may be used to identify and measure any potential PCDD/PCDFs which might be present in exhaust emissions from a fuel or additive/base fuel mixture.

(*3*) The following individual compounds and classes of compounds of PCDD/PCDFs shall be identified and measured:

(*i*) Individual tetra-chloro-substituted dibenzodioxins (tetra-CDDs);

(*ii*) Individual tetra-chloro-substituted dibenzofurans (tetra-CDFs);

(*iii*) Penta-CDDs and penta-CDFs, as one class;

(*iv*) Hexa-CDDs and hexa-CDFs, as one class;

(*v*) Hepta-CDDs and hepta-CDFs as one class; and

(*vi*) Octo-CDDs and octo-CDFs as one class.

(iv) With respect to all phases (vapor, semi-volatile, and particulate) of combustion emissions generated from those fuels and additive/base fuel mixtures classified in the atypical categories (pursuant to § 79.56), the identity and concentration of individual emission products containing such atypical elements shall also be determined.

(3) For evaporative fuels and evaporative fuel additives, characterization of the evaporative emissions shall include:

(i) Determination of the concentration of total hydrocarbons for the applicable vehicle type and class in 40 CFR part 86, subpart B (§§ 86.101 through 86.145).

(ii) Determination of the identity and concentration of individual species of hydrocarbon compounds containing 12 or fewer carbon atoms. Such characterization shall begin within 30 minutes after emission collection is completed.

(iii) In the case of those fuels and additive/base fuel mixtures which contain alcohol and/or ether compounds in the uncombusted state, determination of the identity and concentration of individual species of alcohol and ether compounds containing six or fewer carbon atoms. For fuel and additive formulations containing alcohols or ethers with more than six carbon atoms in the uncombusted state, alcohol and ether species with that higher number of carbon atoms or less must be identified and measured in the emissions. Such characterization shall begin within four hours after emission collection is completed.

(iv) In the case of those fuels and additive/base fuel mixtures which contain atypical elements, determination of the identity and concentration of individual emission products containing such atypical elements.

(4) *Laboratory quality control.* (i) At a minimum, laboratories performing the procedures specified in this section shall conduct calibration testing of their emissions characterization equipment before each new fuel/additive product test start-up. Known samples representative of the compounds potentially to be found in emissions from the product to be characterized shall be used to calibrate such equipment.

(ii) Laboratories performing the procedures specified in this section shall agree to permit quality control inspections by EPA, and for this purpose shall admit any EPA Enforcement Officer, upon proper presentation of credentials, to any facility where vehicles are conditioned or where emissions are generated, collected, stored, sampled, or characterized in meeting the requirements of this section. Such laboratory audits may include EPA distribution of ''blind'' samples for analysis by participating laboratories.

(5) *References.* For additional background information on the emission characterization procedures outlined in this paragraph, the following references may be consulted:

(i) ''Advanced Emission Speciation Methodologies for the Auto/Oil Air Quality Improvement Program—I. Hydrocarbons and Ethers,'' Auto Oil Air Quality Improvement Research Program, SP–920, 920320, SAE, February 1992.

(ii) ''Advanced Speciation Methodologies for the Auto/Oil Air Quality Improvement Research Program—II. Aldehydes, Ketones, and Alcohols,'' Auto Oil Air Quality Improvement Research Program, SP–920, 920321, SAE, February 1992.

(iii) ASTM D 5197–91, ''Standard Test Method for Determination of Formaldehyde and Other Carbonyl Compounds in Air (Active Sampler Methodology).''

(iv) Johnson J. H., Bagley, S. T., Gratz, L. D., and Leddy, D. G., ''A Review of Diesel Particulate Control Technology and Emissions Effects—1992 Horning Memorial Award Lecture,'' SAE Technical Paper Series, SAE 940233, 1994.

(v) Keith *et al.*, ACS Committee on Environmental Improvement, ''Principles of Environmental Analysis,'' The Journal of Analytical Chemistry, Volume 55, pp. 2210–2218, 1983.

(vi) Perez, J.M., Jabs, R.E., Leddy, D.G., eds. ''Chemical Methods for the Measurement of Unregulated Diesel Emissions (CRC–APRAC Project No. CAPI–1–64), Coordinating Research Council, CRC Report No. 551, August, 1987.

(vii) Schuetzle, D., ''Analysis of Nitrated Polycyclic Aromatic Hydrocarbons in Diesel Particulates,'' Analytical Chemistry, Volume 54, pp. 265–271, 1982.

(viii) Siegl, W.O., *et al.*, ''Improved Emissions Speciation Methodology for Phase II of the Auto/Oil Air Quality Improvement Research Program—Hydrocarbons and Oxygenates'', SAE Technical Paper Series, SAE 930142, 1993.

(ix) Tejada, S. B. *et al.*, ''Analysis of Nitroaromatics in Diesel and Gasoline Car Emissions,'' SAE Paper No. 820775, 1982.

(x) Tejada, S. B. *et al.*, ''Fluorescence Detection and Identification of Nitro Derivatives of Polynuclear Aromatic Hydrocarbons by On-Column Catalytic Reduction to Aromatic Amines,'' Analytical Chemistry, Volume 58, pp. 1827–1834, July 1986.

(xi) ''Test Method for Determination of C1–C4 Alcohols and MTBE in Gasoline by Gas Chromatography,'' 40 CFR part 80, appendix F.

(c) *Exposure Analysis.* Using annual and projected production volume, marketing, and distribution data submitted as part of the basic registration data, specified in § 79.59(b), manufacturers shall provide a qualitative discussion of the potential public health exposure(s) of the general population and any special at-risk populations to the emission products of their fuel or additive product(s). The analysis accompanying a group submission shall address the characteristics of the cumulative exposure resulting from the use of all fuel or additive products in the group. Modeling and other quantitative approaches to the analysis are encouraged when the appropriate data is available.

(d) *Literature Search.* (1) Manufacturers of fuels and fuel additives shall conduct a literature search and compilation of information on the potential toxicologic, environmental, and other public welfare effects of the emissions of such fuels and additives. The literature search shall include all available relevant information from in-house, industry, government, and public sources pertaining to the emissions of the subject fuel or fuel additive or the emissions of similar fuels or additives, with such similarity determined according to the provisions of § 79.56.

(2) The literature search shall address the potential adverse effects of whole combustion emissions, evaporative emissions, relevant emission fractions, and individual emission products of the subject fuel or fuel additive except as specified in the following paragraph. The individual emission products to be included are those identified pursuant to the emission characterization procedures specified in paragraph (b) of this section, other than carbon monoxide, carbon dioxide, nitrogen oxides, benzene, 1,3-butadiene, acetaldehyde, and formaldehyde.

(3) In the case of the individual emission products of non-baseline or atypical fuels and additives (pursuant to § 79.56(e)(2)), the literature data need

not be submitted for those emission products which are the same as the combustion emission products of the respective base fuel for the product's fuel family (pursuant to § 79.55). For this purpose, data on the base fuel emission products for the product's fuel family:

(i) May be found in the literature of previously-conducted, adequate emission speciation studies for the base fuel, or for a fuel or additive/fuel mixture capable of grouping with the base fuel (see, for example, the references in paragraph (b)(5) of this section).

(ii) May be compiled while gathering internal control data during emissions characterization studies on the manufacturer's non-baseline or atypical product; or

(iii) May be obtained from various manufacturers in the course of their testing different additive(s) belonging to the same fuel family, or in the testing of a base fuel serving as representative of the baseline group for the respective fuel family.

(e) *Data bases.* The literature search must include the results of searching appropriate commercially available chemical, toxicologic, and environmental databases. The databases shall be searched using, at a minimum, CAS numbers (when applicable), chemical names, and common synonyms.

(f) *Search period.* The literature search shall cover a time period beginning at least thirty years prior to the date of submission of the reports specified in §§ 79.59(b) through (c) and ending no earlier than six months prior to the date on which testing is commenced or reports are submitted in compliance with this subpart.

(g) *References.* Information on base fuel emission inventories may be found in references in paragraphs (b)(5)(i) through (xi) of this section, as well as in the following:

(1) Auto/Oil Air Quality Improvement Research Program, Technical Bulletin #1, December 1990.

(2) Keith *et al.,* ACS Committee on Environmental Improvement, ''Principles of Environmental Analysis,'' The Journal of Analytical Chemistry, Volume 55, pp. 2210–2218, 1983.

(3) ''The Composition of Gasoline Engine Hydrocarbon Emissions—An Evaluation of Catalyst and Fuel Effects''—SAE 902074 and ''Speciated Hydrocarbon Emissions from Aromatic, Olefin, and Paraffinic Model Fuels''—SAE 930373.

§ 79.53 Tier 2.

(a) *Generally.* Subject to the provisions of § 79.53(b) through (d), the combustion emissions of each fuel or fuel additive subject to testing under this subpart must be tested in accordance with each of the testing guidelines in §§ 79.60 through 79.68, except that fuels and additives in the methane and propane fuel families (pursuant to § 79.56(e)(1)(v) and (vi)) need not undergo the Salmonella mutagenicity assay in § 79.68). Similarly, subject to the provisions of § 79.53(b) through (d), the evaporative emissions of each designated evaporative fuel and each designated evaporative fuel additive subject to testing under this subpart must be tested according to each of the testing guidelines in §§ 79.60 through 79.67 (excluding § 79.68, *Salmonella typhimurium* Reverse Mutation Assay).

(b) *Manufacturer Determination.* Manufacturers shall determine whether the information gathered pursuant to the literature search in § 79.52(d) contains the results of adequately performed and adequately documented previous testing which provides information reasonably comparable to that supplied by the health tests described in §§ 79.62 through 79.68 regarding the carcinogenicity, mutagenicity, neurotoxicity, teratogenicity, reproductive/fertility measures, and general toxicity effects of the emissions of the fuel or additive. When manufacturers make an affirmative determination, they need submit only the information gathered pursuant to § 79.52(d) for such tests. EPA maintains final authority in judging whether the information is an adequate substitution in lieu of conducting the associated tests. EPA's determination of the adequacy of existing information shall be guided by the considerations described in paragraph (d) of this section. If EPA finds that the manufacturer has relied upon inadequate test data, then the manufacturer will not be considered to be in compliance until

the corresponding tests have been conducted and the results submitted to EPA.

(c) *Testing.* (1) All testing required pursuant to this section must be done in accordance with the procedures, equipment, and facility requirements described in §§ 79.57, 79.60, and 79.61 regarding emissions generation, good laboratory practices, and inhalation exposure testing, respectively, as well as any other requirements described in this subpart. The laboratory conducting the animal studies shall be registered and in good standing with the United States Department of Agriculture and regularly inspected by United States Department of Agriculture veterinarians. In addition, the facility must be accredited by a generally recognized independent organization which sets laboratory animal care standards. Use of inadequate test protocols or substandard laboratory techniques in performing any testing required by this subpart may result in cancellation of all affected registrations.

(2) Carcinogenic or mutagenic effects in animals from emissions exposures shall be determined pursuant to § 79.64 *In vivo* Micronucleus Assay, § 79.65 *In vivo* Sister Chromatid Exchange Assay, and § 79.68 *Salmonella typhimurium* Reverse Mutation Assay. Teratogenic effects and reproductive toxicity shall be examined pursuant to § 79.63 Fertility Assessment/Teratology. General toxicity and pulmonary effects shall be determined pursuant to § 79.62 Subchronic Toxicity Study with Specific Health Effect Assessments. Neurotoxic effects shall be determined pursuant to § 79.66 Neuropathology Assessment and § 79.67 Glial Fibrillary Acidic Protein Assay.

(d) *EPA Determination.* (1) After submission of all information and testing, EPA in its judgment shall determine whether previously conducted tests relied upon in the registration submission are adequately performed and documented and provide information reasonably comparable to that which would be provided by the tests described herein. Manufacturers' submissions shall be sufficiently detailed to allow EPA to judge the adequacy of protocols, techniques, experimental design, statistical analyses, and conclusions. Studies shall be performed using generally accepted scientific principles, good laboratory techniques, and the testing guidelines specified in these regulations.

(2) EPA shall give appropriate weight when making this determination to the following factors:

(i) The age of the data;

(ii) The adequacy of documentation of procedures, findings, and conclusions;

(iii) The extent to which the testing conforms to generally accepted scientific principles and practices;

(iv) The type and number of test subjects;

(v) The number and adequacy of exposure concentrations, *i.e.*, emission dilutions;

(vi) The degree to which the tested emissions were generated by procedures and under conditions reasonably comparable to those set forth in § 79.57; and

(vii) The degree to which the test procedures conform to the testing guidelines set forth in §§ 79.60 through 79.68 and/or furnish information comparable to that provided by such testing.

(3) The test animals shall be rodents, preferably a strain of rat, and testing shall include all of the endpoints covered in §§ 79.62 through 79.68. All studies shall be properly executed, with appropriate documentation, and in accord with the individual health testing guidelines (§§ 79.60 through 79.68) of this part, e.g., 90-day, 6-hour per day exposure, minimum.

(4) In general, the data in a manufacturer's registration submittal shall be adequate if the duration of a test's exposure period is at least as long, in days and hours, as the inhalation exposure specified in the related health test guideline(s). Data from tests with shorter exposure durations than those specified in the guidelines may be acceptable if the test results are positive (*i.e.*, exhibit adverse effects) and/or include a demonstrable concentration-response relationship.

(5) Data in support of a manufacturer's registration submittal shall directly address the effects of inhalation exposure to the whole evaporative and exhaust emissions of the respective

fuel or additive or to the whole evaporative and exhaust emissions of other fuels or additives which satisfy the criteria in § 79.56 for classification into the same group as the subject fuel or fuel additive. Data obtained in the testing of a raw liquid fuel or additive/base fuel mixture or a raw, aerosolized fuel or additive/base fuel mixture shall not be adequate to support a manufacturer's registration submittal. Data from testing of evaporative emissions cannot substitute for test data on combustion emissions. Data from testing of combustion emissions cannot substitute for test data on evaporative emissions.

§ 79.54 Tier 3.

(a) *General Criteria for Requiring Tier 3 Testing.* (1) Tier 3 testing shall be required of a manufacturer or group of manufacturers at EPA's discretion when remaining uncertainties as to the significance of observed health effects, welfare effects, and/or emissions exposures from a fuel or fuel/additive mixture interfere with EPA's ability to make reasonable estimates of the potential risks posed by emissions from the fuel or additive products. Tier 3 testing may be conducted either on an individual basis or a group basis. If performed on a group basis, EPA may require either the same representative to be used in Tier 3 testing as was used in Tier 2 testing or may select a different member or members of the group to represent the group in the Tier 3 tests.

(2) In addition to the criteria specific to particular tests as summarized and detailed in the testing guidelines (§§ 79.62 through 79.68), EPA may consider a number of factors (including, but not limited to):

(i) The number of positive and negative outcomes related to each endpoint;

(ii) The identification of concentration-effect relationships;

(iii) The statistical sensitivity and significance of such studies;

(iv) The severity of the observed effects (e.g., whether the effects would be likely to lead to incapacitating or irreversible conditions);

(v) The type and number of species included in the reported tests;

(vi) The consistency and clarity of apparent mechanisms, target organs, and outcomes;

(vii) The presence or absence of effective health test control data for base-fuel-only versus additive/base fuel mixture comparisons;

(viii) The nature and amount of known toxic agents in the emissions stream; and

(ix) The observation of lesions which specifically implicate inhalation as an important exposure route.

(3) *Consideration of exposure.* EPA retains discretion to consider, in addition to available toxicity data, any Tier 1 data on potential exposures to emissions from a particular fuel or fuel additive (or group of fuels and/or fuel additives) in determining whether to require Tier 3 testing. EPA may consider, but is not limited to, the following factors:

(i) Types and emission rates of speciated emission components;

(ii) Types and emission rates of combinations of compounds or elements of concern;

(iii) Historical and/or projected production volumes and market distributions; and

(iv) Estimated population and/or environmental exposures obtained through extrapolation, modeling, or literature search findings on ambient, occupational, or epidemiological exposures.

(b) *Notice.* (1) EPA will determine whether Tier 3 testing is necessary upon receipt of a manufacturer's (or group's) submittal as prescribed under § 79.51(d). If EPA determines on the basis of the Tier 1 and 2 data submission and any other available information that further testing is necessary, EPA will require the responsible manufacturer(s) to conduct testing as described elsewhere in this section. EPA will notify the manufacturer (or group) by certified letter of the purpose and nature of any proposed testing and of the proposed deadline for completing the testing. A copy of the letter will be placed in the public record. EPA will provide the manufacturer a 60-day comment period after the manufacturer's receipt of such notice. EPA may extend the comment period if it appears from the nature of the issues

raised that further discussion is warranted. In the event that no comment is received by EPA from the manufacturer (or group) within the comment period, the manufacturer (or group) shall be deemed to have consented to the adoption by EPA of the proposed Tier 3 requirements.

(2) EPA will issue a notice in the FEDERAL REGISTER of its intent to require testing under Tier 3 for a particular fuel or additive manufacturer and that a copy of the letter to the manufacturer outlining the Tier 3 testing for that manufacturer is available in the public record for review and comment. The public shall have a minimum of thirty (30) days after the publication of this notice to comment on the proposed Tier 3 testing.

(3) EPA will include in the public record a copy of any timely comments concerning the proposed Tier 3 testing requirements received from the affected manufacturer or group or from the public, and the responses of EPA to such comments. After reviewing all such comments received, EPA will adopt final Tier 3 requirements by sending a certified letter describing such final requirements to the manufacturer or group. EPA will also issue a notice in the FEDERAL REGISTER announcing that it has adopted such final Tier 3 requirements and that a copy of the letter adopting the requirements has been included in the public record.

(4) Prior to beginning any required Tier 3 testing, the manufacturer shall submit detailed test protocols to EPA for approval. Once EPA has determined the Tier 3 testing requirements and approves the test protocols, any modification to the requirements shall be governed by § 79.51(f).

(c) *Carcinogenicity and Mutagenicity Testing.* (1) A potential need for Tier 3 carcinogenicity and/or mutagenicity testing may be indicated if the results of the *In vivo* Micronucleus Assay, required under § 79.64, the *In vivo* Sister Chromatid Exchange Assay, required under § 79.65, the Salmonella mutagenicity assay required under § 79.68, or relevant pathologic findings under § 79.62 demonstrate a statistically significant dose-related positive response as compared with appropriate controls. Alternatively, Tier 3 carcinogenicity testing and/or mutagenicity testing may be required if there are positive outcomes for at least one concentration in two or more of the tests required under §§ 79.64, 79.65, and 79.68.

(2) The testing for carcinogenicity required under this paragraph may, at EPA's discretion, be conducted in accordance with 40 CFR 798.3300 or 798.3320, or their equivalents (see suggested references following each health effects testing guideline). The testing for mutagenicity required under this paragraph may likewise be conducted in accordance with 40 CFR 798.5195, 798.5500, 798.5955, 798.7100, and/or other suitable equivalent testing (see suggested references following each health effects testing guideline). EPA may supplement or modify guidelines as required to ensure that the prescribed testing addresses the identified areas of concern.

(d) *Reproductive and Teratological Effects Testing.* (1) A potential need for Tier 3 testing may be indicated if the results of the Fertility Assessment/Teratology study required under § 79.63 or relevant findings under § 79.62 demonstrate, in comparison with appropriate controls, a statistically significant dose-related positive response in one or more of the possible test outcomes. Similarly, Tier 3 testing may be indicated if statistically significant positive results are confined to either sex, or to the fetus as opposed to the pregnant adult.

(2) The testing for reproductive and teratological effects required under this paragraph may, at EPA's discretion, be conducted in accordance with 40 CFR 798.4700 and/or by performance of a reproductive assay by continuous breeding. These guidelines may be modified or supplemented by EPA as required to ensure that the prescribed testing addresses the identified areas of concern.

(e) *Neurotoxicity Testing.* (1) A potential need for Tier 3 neurotoxicity testing may be indicated if either the results of the Neuropathology Assessment required under § 79.67 shows concentration-related effects in exposed animals or the Glial Fibrillary Acidic Protein Assay required under § 79.66

demonstrates a statistically significant concentration-related positive response as compared with appropriate controls. Similarly, Tier 3 neurotoxicity testing may be indicated if relevant results under § 79.62 demonstrate a statistically significant positive response in comparison to appropriate controls.

(2) The testing for neurotoxicity required under this paragraph may, at EPA's discretion, be conducted in accordance with 40 CFR 798.3260 and 40 CFR part 798 subpart G. These guidelines may be modified or supplemented by EPA as required to ensure that the prescribed testing addresses the identified areas of concern.

(f) *General and Pulmonary Toxicity Testing.* (1) A potential need for Tier 3 general and/or pulmonary toxicity testing may be indicated if, in comparison with appropriate controls, the results of the Subchronic Toxicity Study, pursuant to § 79.62, demonstrate abnormal gross analysis or histopathological findings (especially as relates to lung pathology from whole-body preserved test animals) or persistence or delayed occurrence of toxic effects beyond the exposure period.

(2) A potential need for Tier 3 testing with respect to other organ systems or endpoints not addressed by specific Tier 2 tests, e.g., hepatic, renal, or endocrine toxicity, may be demonstrated by findings in the Tier 2 Subchronic Toxicity Study (pursuant to § 79.62) or by findings in the Tier 1 literature search of adverse functional, physiologic, metabolic, or histopathologic effects of fuel or additive emissions to such other organ systems or any other information available to EPA. In addition, findings in the Tier 1 emission characterization of significant levels of a known toxicant to such other organ systems and endpoints may also indicate a need for relevant health effects testing. The testing required under this paragraph may include tests conducted in accordance with 40 CFR 798.3260 or 798.3320. These guidelines may be modified or supplemented by EPA as necessary to ensure that the prescribed testing addresses the identified areas of concern.

(3) The testing for general/pulmonary toxicity required under this paragraph may, at EPA's discretion, be conducted in accordance with 40 CFR 798.2450 or 798.3260. These guidelines may be modified or supplemented by EPA as necessary to ensure that the prescribed testing addresses the identified areas of concern. Pulmonary function measurements, host defense assays, immunotoxicity tests, cell morphology/morphometry, and/or enzyme assays of lung lavage cells and fluids may be specifically required.

(g) *Other Tier 3 Testing.* (1) A manufacturer or group may be required to use up-to-date modeling, sampling, monitoring, and/or analytic approaches at the Tier 3 level to provide:

(i) Estimates of exposures to the emission products of a fuel or fuel additive or group of products;

(ii) The expected atmospheric transformation products of such emissions; and

(iii) The environmental partitioning of such emissions to the air, soil, water, and biota.

(2) Additional emission characterization may be required if uncertainty over the identity of chemical species or rate of their emission interferes with reasonable judgments as to the presence and/or concentration of potentially toxic substances in the emissions of a fuel or fuel additive. The required tests may include characterization of additional classes of emissions, the characterization of emissions generated by additional vehicles/engines of various technology mixes (e.g., catalyzed versus non-catalyzed emissions), and/or other more precise analytic procedures for identification or quantification of emissions compounds. Additional emissions testing may also be required to evaluate concerns which may arise regarding the potential effects of a fuel or fuel additive on the performance of emission control equipment.

(3) A manufacturer or group may be required to conduct biological and/or exposure studies at the Tier 3 level to evaluate directly the potential public welfare or environmental effects of the emissions of a fuel or additive, if significant concerns about such effects arise as a result of EPA's review of the

literature search or emission characterization findings in Tier 1 or the results of the toxicological tests in Tier 2.

(4) With regard to group submittals, Tier 3 studies on a fuel or additive product(s) other than the originally specified group representative may be required if specific differences in the product's composition indicate that its emissions may have different toxicologic properties from those of the original group representative.

(5) Additional emission characterization and/or toxicologic tests may be required to evaluate the impact of different vehicle, engine, or emission control technologies on the observed composition or health or welfare effects of the emissions of a fuel or additive.

(6) Toxicological tests on individual emission products may be required.

(7) Upon review of information submitted for an aerosol product under § 79.58(e), emissions characterization, exposure, and/or toxicologic testing at a Tier 3 level may be required.

(8) A manufacturer which qualifies for and has elected to use the special provisions for the products of small businesses (pursuant to § 79.58(d)) may be required to conduct emission characterization, exposure, and /or toxicologic studies at the Tier 3 level for such products, as specified in § 79.58(d)(4).

(9) The examples of potential Tier 3 tests described in this section do not in any way limit EPA's broad discretion and authority under Tier 3.

§ 79.55 Base fuel specifications.

(a) *General Characteristics.* (1) The base fuel(s) in each fuel family shall serve as the group representative(s) for the baseline group(s) in each fuel family pursuant to § 79.56. Also, as specified in § 79.51(h)(1), for fuel additives undergoing testing, the designated base fuel for the respective fuel family shall serve as the substrate in which the additive shall be mixed prior to the generation of emissions.

(2) Base fuels shall contain a limited complement of the additives which are essential for the fuel's production or distribution and/or for the successful operation of the test vehicle/engine throughout the mileage accumulation and emission generation periods. Such additives shall be used at the minimum effective concentration-in-use for the base fuel in question.

(3) Unless otherwise restricted, the presence of trace contaminants does not preclude the use of a fuel or fuel additive as a component of a base fuel formulation.

(4) When an additive is the test subject, any additive normally contained in the base fuel which serves the same function as the subject additive shall be removed from the base fuel formulation. For example, if a corrosion inhibitor were the subject of testing and if this additive were to be tested in a base fuel which normally contained a corrosion inhibitor, this test additive would replace the corrosion inhibitor normally included as a component of the base fuel.

(5) Additive components of the methanol, ethanol, methane, and propane base fuels in addition to any such additives included below shall be limited to those recommended by the manufacturers of the vehicles and/or engines used in testing such fuels. For this purpose, EPA will review requests from manufacturers (or their agents) to modify the additive specifications for the alternative fuels and, if necessary, EPA shall change these specifications based on consistency of those changes with the associated vehicle manufacturer's recommendations for the operation of the vehicle. EPA shall publish notice of any such changes to a base fuel and/or its base additive package specifications in the FEDERAL REGISTER.

(b) *Gasoline Base Fuel.* (1) The gasoline base fuel is patterned after the reformulated gasoline summer baseline fuel as specified in CAA section 211(k)(10)(B)(i). The specifications and blending tolerances for the gasoline base fuel are listed in Table F94–1. The additive types which shall be required and/or permissible in the gasoline base fuel are listed in Table 1 as well.

TABLE F94–1.—GASOLINE BASE FUEL PROPERTIES

API Gravity	57.4±0.3
Sulfur, ppm	339±25
Benzene, vol%	1.53±0.3

TABLE F94–1.—GASOLINE BASE FUEL PROPERTIES—Continued

RVP, psi	8.7±0.3
Octane, (R+M)/2	87.3±0.5
Distillation Parameters:	
10%, °F	128±5
50%, °F	218±5
90%, °F	330±5
Aromatics, vol%	32.0±2.7
Olefins, vol%	9.2±2.5
Saturates, vol%	58.8±2.0
Additive Types:	
Required	Deposit Control Corrosion Inhibitor Demulsifier Anti-oxidant Metal Deactivator
Permissible	Anti-static

(2) The additive components of the gasoline base fuel shall contain compounds comprised of no elements other than carbon, hydrogen, oxygen, nitrogen, and sulfur. Additives shall be used at the minimum concentration needed to perform effectively in the gasoline base fuel. In no case shall their concentration in the base fuel exceed the maximum concentration recommended by the additive manufacturer. The increment of sulfur contributed to the formulation by any additive shall not exceed 15 parts per million sulfur by weight and shall not cause the gasoline base fuel to exceed the sulfur specifications in Table F94–1 of this section.

(c) *Diesel Base Fuel.* (1) The diesel base fuel shall be a #2 diesel fuel having the properties and blending tolerances shown in Table F94–2 of this section. The additive types which shall be permissible in diesel base fuel are presented in Table F94–2 as well.

TABLE F94–2.—DIESEL BASE FUEL PROPERTIES

API Gravity	33±1
Sulfur, wt%	0.05±0.0025
Cetane Number	45.2±2
Cetane Index	45.7±2
Distillation Parameters:	
10%, °F	433±5
50%, °F	516±5
90%, °F	606±5
Aromatics, vol%	38.4±2.7
Olefins, vol%	1.5±0.4
Saturates, vol%	60.1±2.0
Additive Types:	
Required	Corrosion Inhibitor Demulsifier Anti-oxidant Metal Deactivator

TABLE F94–2.—DIESEL BASE FUEL PROPERTIES—Continued

Permitted	Anti-static Flow Improver
Not Permitted	Deposit Control

(2) The additive components of the diesel base fuel shall contain compounds comprised of no elements other than carbon, hydrogen, oxygen, nitrogen, and sulfur. Additives shall be used at the minimum concentration needed to perform effectively in the diesel base fuel. In no case shall their concentration in the base fuel exceed the maximum concentration recommended by the additive manufacturer. The increment of sulfur contributed to the base fuel by additives shall not cause the diesel base fuel to exceed the sulfur specifications in Table F94–2 of this section.

(d) *Methanol Base Fuels.* (1) The methanol base fuels shall contain no elements other than carbon, hydrogen, oxygen, nitrogen, sulfur, and chlorine.

(2) The M100 base fuel shall consist of 100 percent by volume chemical grade methanol.

(3) The M85 base fuel is to contain 85 percent by volume chemical grade methanol, blended with 15 percent by volume gasoline base fuel meeting the gasoline base fuel specifications outlined in paragraph (b)(1) of this section. Manufacturers shall ensure the methanol compatibility of lubricating oils as well as fuel additives used in the gasoline portion of the M85 base fuel.

(4) The methanol base fuels shall meet the specifications listed in Table F94–3.

TABLE F94–3.—METHANOL BASE FUEL PROPERTIES

M100:	
Chemical Grade MeOH, vol%	100
Chlorine (as chlorides), wt%, max	0.0001
Water, wt%, max	0.5
Sulfur, wt%, max	0.002
M85	
Chemical Grade MeOH, vol%,	85
Gasoline Base Fuel, vol%	15
Chlorine (as chlorides), wt%, max	0.0001

TABLE F94–3.—METHANOL BASE FUEL PROPERTIES—Continued

Water, wt%, max	0.5
Sulfur, wt%, max	0.004

(e) *Ethanol Base Fuel.* (1) The ethanol base fuel, E85, shall contain no elements other than carbon, hydrogen, oxygen, nitrogen, sulfur, chlorine, and copper.

(2) The ethanol base fuel shall contain 85 percent by volume chemical grade ethanol, blended with 15 percent by volume gasoline base fuel that meets the specifications listed in paragraph (b)(1) of this section. Additives used in the gasoline component of E85 shall be ethanol-compatible.

(3) The ethanol base fuel shall meet the specifications listed in Table F94–4.

TABLE F94–4.—ETHANOL BASE FUEL PROPERTIES

E85:	
Chemical Grade EtOH, vol%, min	85
Gasoline Base Fuel, vol%	15
Chlorine (as chloride), wt%, max	0.0004
Copper, mg/L, max	0.07
Water, wt%, max	0.5
Sulfur, wt%, max	0.004

(f) *Methane Base Fuel.* (1) The methane base fuel is a gaseous motor vehicle fuel marketed commercially as compressed natural gas (CNG), whose primary constituent is methane.

(2) The methane base fuel shall contain no elements other than carbon, hydrogen, oxygen, nitrogen, and sulfur. The fuel shall contain an odorant additive for leak detection purposes. The added odorant shall be used at a level such that, at ambient conditions, the fuel must have a distinctive odor potent enough for its presence to be detected down to a concentration in air of not over ⅕ (one-fifth) of the lower limit of flammability. After addition of the odorant, the methane base fuel shall contain no more than 16 ppm sulfur by volume.

(3) The methane base fuel shall meet the specifications listed in Table F94–5.

TABLE F94–5.—METHANE BASE FUEL SPECIFICATIONS

Methane, mole%, min	89.0
Ethane, mole%, max	4.5
Propane and higher HC, mole%, max	2.3
C6 and higher HC, mole%, max	0.2
Oxygen, mole%, max	0.6
Sulfur (including odorant additive) ppmv, max	16
Inert gases:	
Sum of CO_2 and N_2, mole%, max	4.0

(g) *Propane Base Fuel.* (1) The propane base fuel is a gaseous motor vehicle fuel, marketed commercially as liquified petroleum gas (LPG), whose primary constituent is propane.

(2) The propane base fuel may contain no elements other than carbon, hydrogen, oxygen, nitrogen, and sulfur. The fuel shall contain an odorant additive for leak detection purposes. The added odorant shall be used at a level such that at ambient conditions the fuel must have a distinctive odor potent enough for its presence to be detected down to a concentration in air of not over ⅕ (one-fifth) of the lower limit of flammability. After addition of the odorant, the propane base fuel shall contain no more than 120 ppm sulfur by weight.

(3) The propane base fuel shall meet the specifications listed in Table F94–6.

TABLE F94—6.—PROPANE BASE FUEL SPECIFICATIONS

Vapor pressure at 100–F, psig, max	208
Evaporative temperature, 95%, °F, max..	−37
Propane, vol%, min	92.5
Propylene, vol%, max	5.0
Butane and heavier, vol%, max	2.5
Residue-evaporation of 100mL, max, mL	0.05
Sulfur (including odorant additive) ppmw, max.	123

§ 79.56 Fuel and fuel additive grouping system.

(a) Manufacturers of fuels and fuel additives are allowed to satisfy the testing requirements in §§ 79.52, 79.53, and 79.54 and the associated reporting requirements in § 79.59 on an individual or group basis, provided that such

products meet the criteria in this section for enrollment in the same fuel/additive group. However, each manufacturer of a fuel or fuel additive must individually comply with the notification requirements of § 79.59(b). Further, if a manufacturer elects to comply by participation in a group, each manufacturer continues to be individually subject to the information requirements of this subpart.

(1) The use of the grouping provision to comply with Tier 1 and Tier 2 testing requirements is voluntary. No manufacturer is prohibited from testing and submitting its own data for its own product registration, despite its qualification for membership in a particular group.

(2) The only groups permitted are those established in this section.

(b) Each manufacturer who chooses to enroll a fuel or fuel additive in a group of similar fuels and fuel additives as designated in this section may satisfy the registration requirements through a group submission of jointly-sponsored testing and analysis conducted on a product which is representative of all products in that group, provided that the group representative is chosen according to the specifications in this section.

(1) The health effects information submitted by a group shall be considered applicable to all fuels and fuel additives in the group. A fuel or fuel additive manufacturer who has chosen to participate in a group may subsequently choose to perform testing of such fuel or fuel additive on an individual basis; however, until such independent registration information has been received and reviewed by EPA, the information initially submitted by the group on behalf of the manufacturer's fuel or fuel additive shall be considered applicable and valid for that fuel or fuel additive. It could therefore be used to support requirements for further testing under the provisions of Tier 3 or to support regulatory decisions affecting that fuel or fuel additive.

(2) Manufacturers are responsible for determining the appropriate groups for their products according to the criteria in this section and for enrolling their products into those groups under industry-sponsored or other independent brokering arrangements.

(3) Manufacturers who enroll a fuel or fuel additive into a group shall share the applicable costs according to appropriate arrangements established by the group. The organization and administration of group functions and the development of cost-sharing arrangements are the responsibility of the participating manufacturers. If manufacturers are unable to agree on fair and equitable cost sharing arrangements and if such dispute is referred by one or more manufacturers to EPA for resolution, then the provisions in § 79.56(c) (1) and (2) shall apply.

(c) In complying with the registration requirements for a given fuel or fuel additive, notwithstanding the enrollment of such fuel or additive in a group, a manufacturer may make use of available information for any product which conforms to the same grouping criteria as the given product. If, for this purpose, a manufacturer wishes to rely upon the information previously submitted by another manufacturer (or group of manufacturers) for registration of a similar product (or group of products), then the previous submitter is entitled to reimbursement by the manufacturer for an appropriate portion of the applicable costs incurred to obtain and report such information. Such entitlement shall remain in effect for a period of fifteen years following the date on which the original information was submitted. Pursuant to § 79.59(b)(4)(ii), the manufacturer who relies on previously-submitted registration data shall certify to EPA that the original submitter has been notified and that appropriate reimbursement arrangements have been made.

(1) When private efforts have failed to resolve a dispute about a fair amount or method of cost-sharing or reimbursement for testing costs incurred under this subpart, then any party involved in that dispute may initiate a hearing by filing two signed copies of a request for a hearing with a regional office of the American Arbitration Association and mailing a copy of the request to EPA. A copy must also be sent to each person from whom the filing party seeks reimbursement or who seeks reimbursement from that

party. The information and fees to be included in the request for hearing are specified in 40 CFR 791.20(b) and (c).

(2) Additional procedures and requirements governing the hearing process are those specified in 40 CFR 791.22 through 791.50, 791.60, 791.85, and 791.105, excluding 40 CFR 791.39(a)(3) and 791.48(d).

(d) *Basis for Classification.* (1) Rather than segregating fuels and fuel additives into separate groups, the grouping system applies the same grouping criteria and creates a single set of groups applicable both to fuels and fuel additives.

(2) Fuels shall be classified pursuant to § 79.56(e) into categories and groups of similar fuels and fuel additives according to the components and characteristics of such fuels in their uncombusted state. The classification of a fuel product must take into account the components of all bulk fuel additives which are listed in the registration application or basic registration data submitted for the fuel product.

(3) Fuel additives shall be classified pursuant to § 79.56(e) into categories and groups of similar fuels and fuel additives according to the components and characteristics of the respective uncombusted additive/base fuel mixture pursuant to § 79.51(h)(1).

(4) In determining the category and group to which a fuel or fuel additive belongs, impurities present in trace amounts shall be ignored unless otherwise noted. Impurities are those substances which are present through contamination or which remain in the fuel or additive naturally after processing is completed.

(5) *Reference Standards.* (i) American Society for Testing and Materials (ASTM) standard D 4814–93a, ''Standard Specification for Automotive Spark-Ignition Engine Fuel'', used to define the general characteristics of gasoline fuels (paragraph (e)(3)(i)(A)(3) of this section) and ASTM standard D 975–93, ''Standard Specification for Diesel Fuel Oils'', used to define the general characteristics of diesel fuels (paragraph (e)(3)(ii)(A)(3) of this section) have been incorporated by reference.

(ii) This incorporation by reference was approved by the Director of the Federal Register in accordance with 5 U.S.C. 552(a) and 1 CFR part 51. Copies may be obtained from the American Society for Testing and Materials (ASTM), 1916 Race Street, Philadelphia, PA 19103. Copies may be inspected at U.S. EPA, OAR, 401 M Street SW., Washington, DC, 20460 or at the Office of the Federal Register, 800 North Capitol Street NW., suite 700, Washington, DC.

(e) *Grouping Criteria.* The grouping system is represented by a matrix of three fuel/additive categories within six specified fuel families (see Table F94–7, Grouping System for Fuels and Fuel Additives). Each category may include one or more groups. Within each group, a representative may be designated based on the criteria in this section and joint registration information may be developed and submitted for member fuels and fuel additives.

Table F94–7.—GROUPING SYSTEM FOR FUELS AND FUEL ADDITIVES

Category	Conventional Fuel Families		Alternative Fuel Families			
	Gasoline (A)	Diesel (B)	Methanol (C)	Ethanol (D)	Methane (CNG, LNG) (E)	Propane (LPG) (F)
Baseline	One group represented by gasoline base fuel.	One group represented by diesel base fuel.	Two groups: (1) M100 group (includes methanol-gasoline formulations with at least 96% methanol) represented by M100 base fuel (2) M85 (includes methanol-gasoline formulations with 50–95% methanol) represented by M85 base fuel.	One group (includes ethanol-gasoline formulations with at least 50% ethanol) represented by E85 base fuel.	One group (includes both CNG and LNG), represented by CNG base fuel.	One group represented by LPG base fuel.
Non-baseline	One group for each gasoline-oxygenate blend or each gasoline-methanol/co-solvent blend; one group for each synthetic crude-derived fuel.	One group for each oxygen-contributing compound or class of compounds; one group for each synthetic crude-derived fuel.	One group for each individual non-methanol, non-gasoline component and one group for each unique combination of such components.	One group for each individual non-ethanol, non-gasoline component and one group for each unique combination of such components.	One group to include methane formulations exceeding the specified limit for non-methane hydrocarbons.	One group to include propane formulations exceeding the specified limit for butane and higher hydrocarbons.
Atypical	One group for each atypical element/characteristic, or unique combination of atypical elements/characteristics.	One group for each atypical element/characteristic, or unique combination of atypical elements/characteristics.	One group for each atypical element/characteristic, or unique combination of atypical elements/characteristics.	One group for each atypical element/characteristic, or unique combination of atypical elements/characteristics.	One group for each atypical element/characteristic, or unique combination of atypical elements/characteristics.	One group for each atypical element/characteristic, or unique combination of atypical elements/characteristics.

(1) *Fuel Families.* Each of the following six fuel families (Table F94–7, columns A–F) includes fuels of the type referenced in the name of the family as well as bulk and aftermarket additives which are intended for use in those fuels. When applied to fuel additives, the criteria in these descriptions refer to the associated additive/base fuel mixture, pursuant to § 79.51(h)(1). One or more base fuel formulations are specified for each fuel family pursuant to § 79.55.

(i) The Gasoline Family includes fuels composed of more than 50 percent gasoline by volume and their associated fuel additives. The base fuel for this family is specified in § 79.55(b).

(ii) The Diesel Family includes fuels composed of more than 50 percent diesel fuel by volume and their associated fuel additives. The Diesel fuel family includes both Diesel #1 and Diesel #2 formulations. The base fuel for this family is specified in § 79.55(c).

(iii) The Methanol Family includes fuels composed of at least 50 percent methanol by volume and their associated fuel additives. The M100 and M85 base fuels are specified in § 79.55(d).

(iv) The Ethanol Family includes fuels composed of at least 50 percent ethanol by volume and their associated fuel additives. The base fuel for this family is E85 as specified in § 79.55(e).

(v) The Methane Family includes compressed natural gas (CNG) and liquefied natural gas (LNG) fuels containing at least 50 mole percent methane and their associated fuel additives. The base fuel for the family is a CNG formulation specified in § 79.55(f).

(vi) The Propane Family includes propane fuels containing at least 50 percent propane by volume and their associated fuel additives. The base fuel for this family is a liquefied petroleum gas (LPG) as specified in § 79.55(g).

(vii) A manufacturer seeking registration for formulation(s) which do not fit the criteria for inclusion in any of the fuel families described in this section shall contact EPA at the address in § 79.59(a)(1) for further guidance in classifying and testing such formulation(s).

(2) *Fuel/Additive Categories.* Fuel/additive categories (Table F94–7, rows 1–3) are subdivisions of fuel families which represent the degree to which fuels and fuel additives in the family resemble the base fuel(s) designated for the family. Three general category types are defined in this section. When applied to fuel additives, the criteria in these descriptions refer to the associated additive/base fuel mixture, pursuant to § 79.51(h)(1).

(i) Baseline categories consist of fuels and fuel additives which contain no elements other than those permitted in the base fuel for the respective fuel family and conform to specified limitations on the amounts of certain components or characteristics applicable to that fuel family.

(ii) Non-Baseline Categories consist of fuels and fuel additives which contain no elements other than those permitted in the base fuel for the respective fuel family, but which exceed one or more of the limitations for certain specified components or characteristics applicable to baseline formulations in that fuel family.

(iii) Atypical Categories consist of fuels and fuel additives which contain elements or classes of compounds other than those permitted in the base fuel for the respective fuel family or which otherwise do not meet the criteria for either baseline or non-baseline formulations in that fuel family. A fuel or fuel additive product having both non-baseline and atypical characteristics pursuant to § 79.56(e)(3), shall be considered to be an atypical product.

(3) This section defines the specific categories applicable to each fuel family. When applied to fuel additives, the criteria in these descriptions refer to the associated additive/base fuel mixture, pursuant to § 79.51(h)(1).

(i) *Gasoline Categories.* (A) The Baseline Gasoline category contains gasoline fuels and associated additives which satisfy all of the following criteria:

(*1*) Contain no elements other than carbon, hydrogen, oxygen, nitrogen, and/or sulfur.

(*2*) Contain less than 1.5 percent oxygen by weight.

(*3*) Sulfur concentration is limited to 1000 ppm per the specifications cited in the following paragraph.

(*4*) Possess the physical and chemical characteristics of unleaded gasoline as

specified by ASTM standard D 4814–93a (incorporated by reference, pursuant to paragraph (d)(5) of this section), in at least one Seasonal and Geographical Volatility Class.

(*5*) Derived from conventional petroleum sources only.

(B) The Non-Baseline Gasoline category is comprised of gasoline fuels and associated additives which conform to the specifications in paragraph (e)(3)(i)(A) of this section for the Baseline Gasoline category except that they contain 1.5 percent or more oxygen by weight and/or may be derived from synthetic crudes, such as those prepared from coal, shale and tar sands, heavy oil deposits, and other non-conventional petroleum sources.

(C) The Atypical Gasoline category is comprised of gasoline fuels and associated additives which contain one or more elements other than carbon, hydrogen, oxygen, nitrogen, and sulfur.

(ii) *Diesel Categories.* (A) The Baseline Diesel category is comprised of diesel fuels and associated additives which satisfy all of the following criteria:

(*1*) Contain no elements other than carbon, hydrogen, oxygen, nitrogen, and/or sulfur. Pursuant to 40 CFR 80.29, highway diesel sold after October 1, 1993 shall contain 0.05 percent or less sulfur by weight;

(*2*) Contain less than 1.0 percent oxygen by weight;

(*3*) Diesel formulations containing more than 0.05 percent sulfur by weight are precluded by 40 CFR 80.29;

(*4*) Possess the characteristics of diesel fuel as specified by ASTM standard D 975–93 (incorporated by reference, pursuant to paragraph (d)(5) of this section); and

(*5*) Derived from conventional petroleum sources only.

(B) The Non-Baseline Diesel category is comprised of diesel fuels and associated additives which conform to the specifications in paragraph (e)(3)(ii)(A) of this section for the Baseline Diesel category except that they contain 1.0 percent or more oxygen by weight and/or may be derived from synthetic crudes, such as those prepared from coal, shale and tar sands, heavy oil deposits, and other non-conventional petroleum sources.

(C) The Atypical Diesel category is comprised of diesel fuels and associated additives which contain one or more elements other than carbon, hydrogen, oxygen, nitrogen, and sulfur.

(iii) *Methanol Categories.* (A) The Baseline Methanol category is comprised of methanol fuels and associated additives which contain at least 50 percent methanol by volume, no more than 4.0 percent by volume of substances other than methanol and gasoline, and no elements other than carbon, hydrogen, oxygen, nitrogen, sulfur, and/or chlorine. Baseline methanol shall contain no more than 0.004 percent by weight of sulfur or 0.0001 percent by weight of chlorine.

(B) The Non-Baseline Methanol category is comprised of fuel blends which contain at least 50 percent methanol by volume, more than 4.0 percent by volume of a substance(s) other than methanol and gasoline, and meet the baseline limitations on elemental composition in paragraph (e)(3)(iii)(A) of this section.

(C) The Atypical Methanol category consists of methanol fuels and associated additives which do not meet the criteria for either the Baseline or the Non-Baseline Methanol category.

(iv) *Ethanol Categories.* (A) The Baseline Ethanol category is comprised of ethanol fuels and associated additives which contain at least 50 percent ethanol by volume, no more than five (5) percent by volume of substances other than ethanol and gasoline, and no elements other than carbon, hydrogen, oxygen, nitrogen, sulfur, chlorine, and copper. Baseline ethanol formulations shall contain no more than 0.004 percent by weight of sulfur, 0.0004 percent by weight of chlorine, and/or 0.07 mg/L of copper.

(B) The Non-Baseline Ethanol category is comprised of fuel blends which contain at least 50 percent ethanol by volume, more than five (5) percent by volume of a substance(s) other than ethanol and gasoline, and meet the baseline limitations on elemental composition in paragraph (e)(3)(iv)(A) of this section.

(C) The Atypical Ethanol category consists of ethanol fuels and associated

additives which do not meet the criteria for either the Baseline or the Non-Baseline Ethanol categories.

(v) *Methane Categories.* (A) The Baseline Methane category is comprised of methane fuels and associated additives (including at least an odorant additive) which contain no elements other than carbon, hydrogen, oxygen, nitrogen, and/or sulfur, and contain no more than 20 mole percent non-methane hydrocarbons. Baseline methane formulations shall not contain more than 16 ppm by volume of sulfur, including any sulfur which may be contributed by the odorant additive.

(B) The Non-Baseline Methane category consists of methane fuels and associated additives which conform to the specifications in paragraph (e)(3)(v)(A) of this section for the Baseline Methane category except that they exceed 20 mole percent non-methane hydrocarbons.

(C) The Atypical Methane category consists of methane fuels and associated additives which contain one or more elements other than carbon, hydrogen, oxygen, nitrogen, and/or sulfur, or exceed 16 ppm by volume of sulfur.

(vi) *Propane Categories.* (A) The Baseline Propane category is comprised of propane fuels and associated additives (including at least an odorant additive) which contain no elements other than carbon, hydrogen, oxygen, nitrogen, and/or sulfur, and contain no more than 20 percent by volume non-propane hydrocarbons. Baseline Propane formulations shall not contain more than 123 ppm by weight of sulfur, including any sulfur which may be contributed by the odorant additive.

(B) The Non-Baseline Propane category consists of propane fuels and associated additives which conform to the specifications in paragraph (e)(3)(vi)(A) of this section for the Baseline Propane category, except that they exceed the 20 percent by volume limit for butane and higher hydrocarbons.

(C) The Atypical Propane category consists of propane fuels and associated additives which contain elements other than carbon, hydrogen, oxygen, nitrogen, and/or sulfur, or exceed 123 ppm by weight of sulfur.

(4) *Fuel/Additive Groups.* Fuel/additive groups are subdivisions of the fuel/additive categories. One or more group(s) are defined within each category in each fuel family according to the presence of differing characteristics in the fuel or additive/base fuel mixture. For each group, one formulation (either a base fuel or a member fuel or additive product) is chosen to represent all the member products in the group in any tests required under this subpart. The section which follows describes the fuel/additive groups.

(i) *Baseline Groups.* (A) The Baseline Gasoline category comprises a single group. The gasoline base fuel specified in § 79.55(b) shall serve as the representative of this group.

(B) The Baseline Diesel category comprises a single group. The diesel base fuel specified in § 79.55(c) shall serve as the representative of this group.

(C) The Baseline Methanol category includes two groups: M100 and M85. The M100 group consists of methanol-gasoline formulations containing at least 96 percent methanol by volume. These formulations must contain odorants and bitterants (limited in elemental composition to carbon, hydrogen, oxygen, nitrogen, sulfur, and chlorine) for prevention of purposeful or inadvertent consumption. The M100 base fuel specified in § 79.55(d) shall serve as the representative for this group. The M85 group consists of methanol-gasoline formulations containing at least 50 percent by volume but less than 96 percent by volume methanol. The M85 base fuel specified in § 79.55(d) shall serve as the representative of this group.

(D) The Baseline Ethanol category comprises a single group. The E85 base fuel specified in § 79.55(e) shall serve as the representative of this group.

(E) The Baseline Methane category comprises a single group. The CNG base fuel specified in § 79.55(f) shall serve as the representative of this group.

(F) The Baseline Propane category comprises a single group. The LPG base fuel specified in § 79.55(g) shall serve as the representative of this group.

(ii) *Non-Baseline Groups*—(A) *Non-Baseline Gasoline.* The Non-Baseline

gasoline fuels and associated additives shall sort into groups according to the following criteria:

(*1*) For gasoline fuel and additive products which contain 1.5 percent oxygen by weight or more, a separate non-baseline gasoline group shall be defined by each oxygenate compound or methanol/co-solvent blend listed as a component in the registration application or basic registration data of any such fuel or additive.

(*i*) Examples of oxygenates occurring in non-baseline gasoline formulations include ethanol, methyl tertiary butyl ether (MTBE), ethyl tertiary butyl ether (ETBE), tertiary amyl methyl ether (TAME), diisopropyl ether (DIPE), dimethyl ether (DME), tertiary amyl ethyl ether (TAEE), and any other compound(s) which increase the oxygen content of the gasoline formulation. A separate non-baseline gasoline group is defined for each such oxygenating compound.

(*ii*) Each unique methanol and co-solvent combination (whether one, two, or more additional oxygenate compounds) used in a non-baseline fuel shall also define a separate group. An oxygenate compound used as a co-solvent for methanol in a non-baseline gasoline formulation must be identified as such in its registration. If the oxygenate is not identified as a methanol co-solvent, then the compound shall be regarded by EPA as defining a separate non-baseline gasoline group. Examples of methanol/co-solvent combinations occurring in non-baseline gasoline formulations include methanol/isopropyl alcohol, methanol/butanol, and methanol with alcohols up to C8/octanol (Octamix).

(*iii*) For each such group, the representative to be used in testing shall be a formulation consisting of the gasoline base fuel blended with the relevant oxygenate compound (or methanol/co-solvent combination) in an amount equivalent to the highest actual or recommended concentration-in-use of the oxygenate (or methanol/co-solvent combination) recorded in the basic registration data of any member fuel or additive product. In the event that two or more products in the same group contain the same and highest amount of the oxygenate or methanol/co-solvent blend, then the representative shall be chosen at random for such candidate products.

(*2*) An oxygenate compound or methanol/co-solvent combination to be blended with the gasoline base fuel for testing purposes shall be chemical-grade quality, at a minimum, and shall not contain a significant amount of other contaminating oxygenate compounds.

(*3*) Separate non-baseline gasoline groups shall also be defined for gasoline formulations derived from each particular non-conventional petroleum source or process.

(*i*) Such groups may include, but are not limited to, the following: coal-derived gasoline formulations; chemically-synthesized gasoline formulations (including those using recycled chemical/petrochemical products); tar sand-derived gasoline formulations; shale-derived gasoline formulations; and other types of soil-recovered products used in formulating gasolines.

(*ii*) In any such group, the first product to be registered or to apply for EPA registration shall be the representative of that group. If two or more such products are registered or apply for first registration simultaneously, then the representative shall be chosen by a random method from among such candidate products.

(*4*) Pursuant to § 79.51(i), non-baseline gasoline products may belong to more than one fuel/additive group.

(B) *Non-Baseline Diesel.* The Non-Baseline diesel fuels and associated additives shall sort into groups according to the following criteria:

(*1*) For diesel fuel and additive products which contain 1.0 percent oxygen by weight or more, a separate non-baseline diesel group shall be defined by each individual alcohol or ether listed as a component in the registration application or basic registration data of any such fuel or additive. For each such group, the representative to be used in testing shall be a formulation consisting of the diesel base fuel blended with the relevant alcohol or ether in an amount equivalent to the highest actual or recommended concentration-in-use of the alcohol or ether recorded in the basic registration