AUTHENTICATED
U.S. GOVERNMENT
INFORMATION
GPO

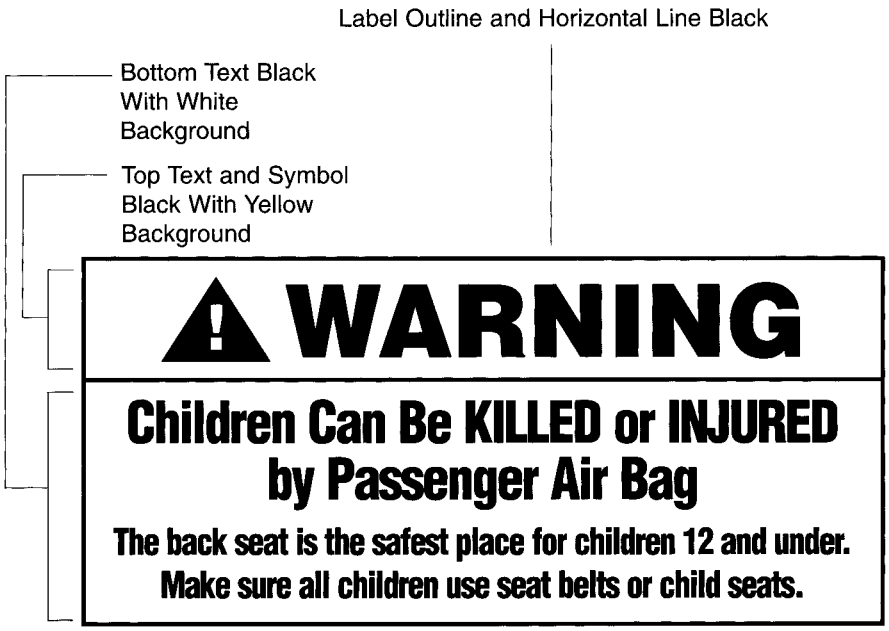

Figure 7. Removable Label on Dash.

[36 FR 22902, Dec. 2, 1971]

EDITORIAL NOTE: For FEDERAL REGISTER citations affecting § 571.208, see the List of CFR Sections Affected in the Finding Aids section of this volume.

§ 571.209 Standard No. 209; Seat belt assemblies.

S1. *Purpose and scope.* This standard specifies requirements for seat belt assemblies.

S2. *Application.* This standard applies to seat belt assemblies for use in passenger cars, multipurpose passenger vehicles, trucks, and buses.

S3. *Definitions. Adjustment hardware* means any or all hardware designed for adjusting the size of a seat belt assembly to fit the user, including such hardware that may be integral with a buckle, attachment hardware, or retractor.

Attachment hardware means any or all hardware designed for securing the webbing of a seat belt assembly to a motor vehicle.

Automatic-locking retractor means a retractor incorporating adjustment hardware by means of a positive self-locking mechanism which is capable when locked of withstanding restraint forces.

Buckle means a quick release connector which fastens a person in a seat belt assembly.

Emergency-locking retractor means a retractor incorporating adjustment hardware by means of a locking mechanism that is activated by vehicle acceleration, webbing movement relative to the vehicle, or other automatic action during an emergency and is capable when locked of withstanding restraint forces.

Hardware means any metal or rigid plastic part of a seat belt assembly.

Load-limiter means a seat belt assembly component or feature that controls tension on the seat belt to modulate the forces that are imparted to occupants restrained by the belt assembly during a crash.

Nonlocking retractor means a retractor from which the webbing is extended to essentially its full length by a small external force, which provides no adjustment for assembly length, and which may or may not be capable of sustaining restraint forces at maximum webbing extension.

Pelvic restraint means a seat belt assembly or portion thereof intended to restrain movement of the pelvis.

Retractor means a device for storing part or all of the webbing in a seat belt assembly.

Seat back retainer means the portion of some seat belt assemblies designed to restrict forward movement of a seat back.

Seat belt assembly means any strap, webbing, or similar device designed to secure a person in a motor vehicle in order to mitigate the results of any accident, including all necessary buckles and other fasteners, and all hardware designed for installing such seat belt assembly in a motor vehicle.

Strap means a narrow nonwoven material used in a seat belt assembly in place of webbing.

Type 1 seat belt assembly is a lap belt for pelvic restraint.

Type 2 seat belt assembly is a combination of pelvic and upper torso restraints.

Type 2a shoulder belt is an upper torso restraint for use only in conjunction with a lap belt as a Type 2 seat belt assembly.

Upper torso restraint means a portion of a seat belt assembly intended to restrain movement of the chest and shoulder regions.

Webbing means a narrow fabric woven with continuous filling yarns and finished selvages.

S4. *Requirements.*

S4.1 (a) *Single occupancy.* A seat belt assembly shall be designed for use by one, and only one, person at any one time.

(b) [Reserved]

(c) *Upper torso restraint.* A Type 2 seat belt assembly shall provide upper torso restraint without shifting the pelvic restraint into the abdominal region. An upper torso restraint shall be designed to minimize vertical forces on the shoulders and spine. Hardware for upper torso restraint shall be so designed and located in the seat belt assembly that the possibility of injury to the occupant is minimized.

A Type 2a shoulder belt shall comply with applicable requirements for a Type 2 seat belt assembly in S4.1 to S4.4, inclusive.

(d) *Hardware.* All hardware parts which contact under normal usage a person, clothing, or webbing shall be free from burrs and sharp edges.

(e) *Release.* A Type 1 or Type 2 seat belt assembly shall be provided with a buckle or buckles readily accessible to the occupant to permit his easy and rapid removal from the assembly. Buckle release mechanism shall be designed to minimize the possibility of accidental release. A buckle with release mechanism in the latched position shall have only one opening in which the tongue can be inserted on the end of the buckle designed to receive and latch the tongue.

(f) *Attachment hardware.* A seat belt assembly shall include all hardware necessary for installation in a motor vehicle in accordance with Society of Automotive Engineers Recommended Practice J800c, ''Motor Vehicle Seat Belt Installation,'' November 1973. However, seat belt assemblies designed for installation in motor vehicles equipped with seat belt assembly anchorages that do not require anchorage nuts, plates, or washers, need not have such hardware, but shall have 7/16–20 UNF–2A or ½–13UNC–2A attachment bolts or equivalent metric hardware. The hardware shall be designed to prevent attachment bolts and other parts from becoming disengaged from the vehicle while in service. Reinforcing plates or washers furnished for universal floor, installations shall be of steel, free from burrs and sharp edges on the peripheral edges adjacent to the vehicle, at least 1.5 mm in thickness and at least 2580 mm^2 in projected area. The distance between any edge of the plate and the edge of the bolt hole shall be at least 15 mm. Any corner shall be rounded to a radius of not less than 6 mm or cut so that no corner angle is less than 135° and no side is less than 6 mm in length.

(g) *Adjustment.* (1) A Type 1 or Type 2 seat belt assembly shall be capable of

adjustment to fit occupants whose dimensions and weight range from those of a 5th-percentile adult female to those of a 95th-percentile adult male. The seat belt assembly shall have either an automatic-locking retractor, an emergency-locking retractor, or an adjusting device that is within the reach of the occupant.

(2) A Type 1 or Type 2 seat belt assembly for use in a vehicle having seats that are adjustable shall conform to the requirements of S4.1(g)(1) regardless of seat position. However, if a seat has a back that is separately adjustable, the requirements of S4.1(g)(1) need be met only with the seat back in the manufacturer's nominal design riding position.

(3) The adult occupants referred to in S4.1(g)(1) shall have the following measurements:

	5th percen- tile adult female	95th percentile adult male
Weight	46.3 kg	97.5 kg.
Erect sitting height	785 mm	965 mm.
Hip breadth (sitting)	325 mm	419 mm.
Hip circumference (sitting).	925 mm	1199 mm.
Waist circumference (sitting).	599 mm	1080 mm.
Chest depth	190 mm	267 mm.
Chest circumference:		
Nipple	775 mm	1130 mm.
Upper	757 mm	1130 mm.
Lower	676 mm	1130 mm.

(h) *Webbing.* The ends of webbing in a seat belt assembly shall be protected or treated to prevent raveling. The end of webbing in a seat belt assembly having a metal-to-metal buckle that is used by the occupant to adjust the size of the assembly shall not pull out of the adjustment hardware at maximum size adjustment. Provision shall be made for essentially unimpeded movement of webbing routed between a seat back and seat cushion and attached to a retractor located behind the seat.

(i) *Strap.* A strap used in a seat belt assembly to sustain restraint forces shall comply with the requirements for webbing in S4.2, and if the strap is made from a rigid material, it shall comply with applicable requirements in S4.2, S4.3, and S4.4.

(j) *Marking.* Each seat belt assembly shall be permanently and legibly marked or labeled with year of manufacture, model, and name or trademark of manufacturer or distributor, or of importer if manufactured outside the United States. A model shall consist of a single combination of webbing having a specific type of fiber weave and construction, and hardware having a specific design. Webbings of various colors may be included under the same model, but webbing of each color shall comply with the requirements for webbing in S4.2.

(k) *Installation instructions.* A seat belt assembly, other than a seat belt assembly installed in a motor vehicle by an automobile manufacturer, shall be accompanied by an instruction sheet providing sufficient information for installing the assembly in a motor vehicle. The installation instructions shall state whether the assembly is for universal installation or for installation only in specifically stated motor vehicles, and shall include at least those items specified in SAE Recommended Practice J800c, ''Motor Vehicle Seat Belt Installations,'' November 1973. If the assembly is for use only in specifically stated motor vehicles, the assembly shall either be permanently and legibly marked or labeled with the following statement, or the instruction sheet shall include the following statement:

This seat belt assembly is for use only in [insert specific seating position(s), e.g., ''front right''] in [insert specific vehicle make(s) and model(s)].

(l) *Usage and maintenance instructions.* A seat belt assembly or retractor shall be accompanied by written instructions for the proper use of the assembly, stressing particularly the importance of wearing the assembly snugly and properly located on the body, and on the maintenance f the assembly and periodic inspection of all components. The instructions shall show the proper manner of threading webbing in the hardware of seat belt assemblies in which the webbing is not permanently fastened. Instructions for a nonlocking retractor shall include a caution that the webbing must be fully extended from the retractor during use of the seat belt assembly unless the retractor is attached to the free end of webbing which is not subjected to any tension during restraint of an occupant by the assembly. Instructions for Type 2a

shoulder belt shall include a warning that the shoulder belt is not to be used without a lap belt.

(m) *Workmanship.* Seat belt assemblies shall have good workmanship in accordance with good commercial practice.

S4.2 *Requirements for webbing.*

(a) *Width.* The width of the webbing in a seat belt assembly shall be not less than 46 mm, except for portions that do not touch a 95th percentile adult male with the seat in any adjustment position and the seat back in the manufacturer's nominal design riding position when measured under the conditions prescribed in S5.1(a).

(b) *Breaking strength.* The webbing in a seat belt assembly shall have not less than the following breaking strength when tested by the procedures specified in S5.1(b): Type 1 seat belt assembly—26,689 N; Type 2 seat belt assembly—22,241 N for webbing in pelvic restraint and 17,793 N for webbing in upper torso restraint.

(c) *Elongation.* Except as provided in S4.5, the webbing in a seat belt assembly shall not extend to more than the following elongation when subjected to the specified forces in accordance with the procedure specified in S5.1(c): Type 1 seat belt assembly—20 percent at 11,120 N; Type 2 seat belt assembly 30 percent at 11,120 N for webbing in pelvic restraint and 40 percent at 11,120 N for webbing in upper torso restraint.

(d) *Resistance to abrasion.* The webbing of a seat belt assembly, after being subjected to abrasion as specified in S5.1(d) or S5.3(c), shall have a breaking strength of not less than 75 percent of the breaking strength listed in S4.2(b) for that type of belt assembly.

(e) *Resistance to light.* The webbing in a seat belt assembly after exposure to the light of a carbon are and tested by the procedure specified in S5.1(e) shall have a breaking strength not less than 60 percent of the strength before exposure to the carbon arc and shall have a color retention not less than No. 2 on the Geometric Gray Scale published by the American Association of Textile Chemists and Colorists, Post Office Box 886, Durham, NC.

(f) *Resistance to micro-organisms.* The webbing in a seat belt assembly after being subjected to micro-organisms and tested by the procedures specified in S5.1(f) shall have a breaking strength not less than 85 percent of the strength before subjection to micro-organisms.

S4.3 *Requirements for hardware.*

(a) *Corrosion resistance.* (1) Attachment hardware of a seat belt assembly after being subjected to the conditions specified in S5.2(a) shall be free of ferrous corrosion on significant surfaces except for permissible ferrous corrosion at peripheral edges or edges of holes on underfloor reinforcing plates and washers. Alternatively, such hardware at or near the floor shall be protected against corrosion by at least an electrodeposited coating of nickel, or copper and nickel with at least a service condition number of SC2, and other attachment hardware shall be protected by an electrodeposited coating of nickel, or copper and nickel with a service condition number of SC1, in accordance with American Society for Testing and Materials B456–79, ''Standard Specification for Electrodeposited Coatings of Copper Plus Nickel Plus Chromium and Nickel Plus Chromium,'' but such hardware shall not be racked for electroplating in locations subjected to maximum stress.

(2) Surfaces of buckles, retractors and metallic parts, other than attachment hardware, of a seat belt assembly after subjection to the conditions specified in S5.2(a) shall be free of ferrous or nonferrous corrosion which may be transferred, either directly or by means of the webbing, to the occupant or his clothing when the assembly is worn. After test, buckles shall conform to applicable requirements in paragraphs (d) to (g) of this section.

(b) *Temperature resistance.* Plastic or other nonmetallic hardware parts of a seat belt assembly when subjected to the conditions specified in S5.2(b) shall not warp or otherwise deteriorate to cause the assembly to operate improperly or fail to comply with applicable requirements in this section and S4.4.

(c) *Attachment hardware.* (1) Eye bolts, shoulder bolts, or other bolt used to secure the pelvic restraint of seat belt assembly to a motor vehicle shall withstand a force of 40,034 N when tested by the procedure specified in S5.2(c)(1), except that attachment bolts

of a seat belt assembly designed for installation in specific models of motor vehicles in which the ends of two or more seat belt assemblies cannot be attached to the vehicle by a single bolt shall have breaking strength of not less than 22,241 N.

(2) Other attachment hardware designed to receive the ends of two seat belt assemblies shall withstand a tensile force of at least 26,689 N without fracture of a section when tested by the procedure specified in S5.2(c)(2).

(3) A seat belt assembly having single attachment hooks of the quick-disconnect type for connecting webbing to an eye bolt shall be provided with a retaining latch or keeper which shall not move more than 2 mm in either the vertical or horizontal direction when tested by the procedure specified in S5.2(c)(3).

(d) *Buckle release.* (1) The buckle of a Type 1 or Type 2 seat belt assembly shall release when a force of not more than 133 N is applied.

(2) A buckle designed for pushbutton application of buckle release force shall have a minimum area of 452 mm^2 with a minimum linear dimension of 10 mm for applying the release force, or a buckle designed for lever application of buckle release force shall permit the insertion of a cylinder 10 mm in diameter and 38 mm in length to at least the midpoint of the cylinder along the cylinder's entire length in the actuation portion of the buckle release. A buckle having other design for release shall have adequate access for two or more fingers to actuate release.

(3) The buckle of a Type 1 or Type 2 seat belt assembly shall not release under a compressive force of 1779 N applied as prescribed in paragraph S5.2(d)(3). The buckle shall be operable and shall meet the applicable requirement of paragraph S4.4 after the compressive force has been removed.

(e) *Adjustment force.* The force required to decrease the size of a seat belt assembly shall not exceed 49 N when measured by the procedure specified in S5.2(e).

(f) *Tilt-lock adjustment.* The buckle of a seat belt assembly having tilt-lock adjustment shall lock the webbing when tested by the procedure specified in S5.2(f) at an angle of not less than 30 degrees between the base of the buckle and the anchor webbing.

(g) *Buckle latch.* The buckle latch of a seat belt assembly when tested by the procedure specified in S5.2(g) shall not fail, nor gall or wear to an extent that normal latching and unlatching is impaired, and a metal-to-metal buckle shall separate when in any position of partial engagement by a force of not more than 22 N.

(h) *Nonlocking retractor.* The webbing of a seat belt assembly shall extend from a nonlocking retractor within 6 mm of maximum length when a tension is applied as prescribed in S5.2(h). A nonlocking retractor on upper torso restraint shall be attached to the nonadjustable end of the assembly, the reel of the retractor shall be easily visible to an occupant while wearing the assembly, and the maximum retraction force shall not exceed 5 N in any strap or webbing that contacts the shoulder when measured by the procedure specified in S5.2(h), unless the retractor is attached to the free end of webbing which is not subjected to any tension during restraint of an occupant by the assembly.

(i) *Automatic-locking retractor.* The webbing of a seat belt assembly equipped with an automatic locking retractor, when tested by the procedure specified in S5.2(i), shall not move more than 25 mm between locking positions of the retractor, and shall be retracted with a force under zero acceleration of not less than 3 N when attached to pelvic restraint, and not less that 2 N nor more than 5 N in any strap or webbing that contacts the shoulders of an occupant when the retractor is attached to upper torso restraint. An automatic locking retractor attached to upper torso restraint shall not increase the restraint on the occupant of the seat belt assembly during use in a vehicle traveling over rough roads as prescribed in S5.2(i).

(j) *Emergency-locking retractor.* An emergency-locking retractor of a Type 1 or Type 2 seat belt assembly, when tested in accordance with the procedures specified in paragraph S5.2(j)—

(1) Shall lock before the webbing extends 25 mm when the retractor is subjected to an acceleration of 7 m/s^2 (0.7 g);

(2) Shall not lock, if the retractor is sensitive to webbing withdrawal, before the webbing extends 51 mm when the retractor is subjected to an acceleration of 3 m/s² (0.3 g) or less.

(3) Shall not lock, if the retractor is sensitive to vehicle acceleration, when the retractor is rotated in any direction to any angle of 15° or less from its orientation in the vehicle;

(4) Shall exert a retractive force of at least 3 N under zero acceleration when attached only to the pelvic restraint;

(5) Shall exert a retractive force of not less than 1 N and not more than 5 N under zero acceleration when attached only to an upper torso restraint;

(6) Shall exert a retractive force of not less than 1 N and not more than 7 N under zero acceleration when attached to a strap or webbing that restrains both the upper torso and the pelvis.

(k) *Performance of retractor.* A retractor used on a seat belt assembly after subjection to the tests specified in S5.2(k) shall comply with applicable requirements in paragraphs (h) to (j) of this section and S4.4, except that the retraction force shall be not less than 50 percent of its original retraction force.

S4.4 *Requirements for assembly performance.*

(a) *Type I seat belt assembly*. Except as provided in S4.5, the complete seat belt assembly including webbing, straps, buckles, adjustment and attachment hardware, and retractors shall comply with the following requirements when tested by the procedures specified in S5.3(a):

(1) The assembly loop shall withstand a force of not less than 22,241 N; that is, each structural component of the assembly shall withstand a force of not less than 11,120 N.

(2) The assembly loop shall extend not more than 7 inches or 178 mm when subjected to a force of 22,241 N; that is, the length of the assembly between anchorages shall not increase more than 356 mm.

(3) Any webbing cut by the hardware during test shall have a breaking strength at the cut of not less than 18,683 N.

(4) Complete fracture through any solid section of metal attachment hardware shall not occur during test.

(b) *Type 2 seat belt assembly*. Except as provided in S4.5, the components of a Type 2 seat belt assembly including webbing, straps, buckles, adjustment and attachment hardware, and retractors shall comply with the following requirements when tested by the procedure specified in S5.3(b):

(1) The structural components in the pelvic restraint shall withstand a force of not less than 11,120 N.

(2) The structural components in the upper torso restraint shall withstand a force of not less than 6,672 N.

(3) The structural components in the assembly that are common to pelvic and upper torso restraints shall withstand a force of not less than 13,345 N.

(4) The length of the pelvic restraint between anchorages shall not increase more than 508 mm when subjected to a force of 11,120 N.

(5) The length of the upper torso restraint between anchorages shall not increase more than 508 mm when subjected to a force of 6,672 N.

(6) Any webbing cut by the hardware during test shall have a breaking strength of not less than 15,569 N at a cut in webbing of the pelvic restraint, or not less than 12,455 N at a cut in webbing of the upper torso restraint.

(7) Complete fracture through any solid section of metal attachment hardware shall not occur during test.

S4.5 *Load-limiter.* (a) A Type 1 or Type 2 seat belt assembly that includes a load-limiter is not required to comply with the elongation requirements of S4.2(c), S4.4(a)(2), S4.4(b)(4) or S4.4(b)(5).

(b) A seat belt assembly that includes a load limiter and that does not comply with the elongation requirements of this standard may be installed in motor vehicles at any designated seating position that is subject to the requirements of S5.1 of Standard No. 208 (§ 571.208).

S4.6 *Manual belts subject to crash protection requirements of Standard No. 208.*

(a)(1) A manual seat belt assembly, which is subject to the requirements of S5.1 of Standard No. 208 (49 CFR 571.208) by virtue of any provision of Standard No. 208 other than S4.1.2.1(c)(2) of that

standard, does not have to meet the requirements of S4.2(a)–(f) and S4.4 of this standard.

(2) A manual seat belt assembly subject to the requirements of S5.1 of Standard No. 208 (49 CFR 571.208) by virtue of S4.1.2.1(c)(2) of Standard No. 208 does not have to meet the elongation requirements of S4.2(c), S4.4(a)(2), S4.4(b)(4), and S4.4(b)(5) of this standard.

S5. *Demonstration procedures.*

S5.1 *Webbing*—(a) *Width.* The width of webbing from three seat belt assemblies shall be measured after conditioning for at least 24 hours in an atmosphere having relative humidity between 48 and 67 percent and a temperature of 23° ±2 °C. The tension during measurement of width shall be not more than 22 N on webbing from a Type 1 seat belt assembly, and 9786 N ± 450 N on webbing from a Type 2 seat belt assembly. The width of webbing from a Type 2 seat belt assembly may be measured during the breaking strength test described in paragraph (b) of this section.

(b) *Breaking strength.* Webbing from three seat belt assemblies shall be conditioned in accordance with paragraph (a) of this section and tested for breaking strength in a testing machine of capacity verified to have an error of not more than one percent in the range of the breaking strength of the webbing in accordance with American Society for Testing and Materials E4–79 ''Standard Methods of Load Verification of Testing Machines.'' The machine shall be equipped with split drum grips illustrated in Figure 1, having a diameter between 51 and 102 mm. The rate of grip separation shall be between 51 and 102 mm per minute. The distance between the centers of the grips at the start of the test shall be between 102 and 254 mm. After placing the specimen in the grips, the webbing shall be stretched continuously at a uniform rate to failure. Each value shall be not less than the applicable breaking strength requirement in S4.2(b), but the median value shall be used for determining the retention of breaking strength in paragraphs (d), (e) and (f) of this section.

(c) *Elongation.* Elongation shall be measured during the breaking strength test described in paragraph (b) of this section by the following procedure: A preload between 196 N and 245 N shall be placed on the webbing mounted in the grips of the testing machine and the needle points of an extensometer, in which the points remain parallel during test, are inserted in the center of the specimen. Initially the points shall be set at a known distance apart between 102 and 203 mm. When the force on the webbing reaches the value specified in S4.2(c), the increase in separation of the points of the extensometer shall be measured and the percent elongation shall be calculated to the nearest 0.5 percent. Each value shall be not more than the appropriate elongation requirement in S4.2(c).

(d) *Resistance to abrasion.* The webbing from three seat belt assemblies shall be tested for resistance to abrasion by rubbing over the hexagon bar prescribed in Figure 2 in the following manner: The webbing shall be mounted in the apparatus shown schematically in Figure 2. One end of the webbing (A) shall be attached to a mass (B) of 2.35 kg ± .05 kg, except that a mass of 1.5 kg ± .05 kg shall be used for webbing in pelvic and upper torso restraints of a belt assembly used in a child restraint system. The webbing shall be passed over the two new abrading edges of the hexagon bar (C) and the other end attached to an oscillating drum (D) which has a stroke of 330 mm. Suitable guides shall be used to prevent movement of the webbing along the axis of hexagonal bar C. Drum D shall be oscillated for 5,000 strokes or 2,500 cycles at a rate of 60 ± 2 strokes per minute or 30 ± 1 cycles per minute. The abraded webbing shall be conditioned as prescribed in paragraph (a) of this section and tested for breaking strength by the procedure described in paragraph (b) of this section. The median values for the breaking strengths determined on abraded and unabraded specimens shall be used to calculate the percentage of breaking strength retained.

(e) *Resistance to light.* Webbing at least 508 mm in length from three seat belt assemblies shall be suspended vertically on the inside of the specimen track in a Type E carbon-arc light exposure apparatus described in Standard

Practice for Generating Light-Exposure Apparatus (Carbon-Arc Type) With and Without Water for Exposure of Nonmetallic Materials, ASTM Designation: G23 81, published by the American Society for Testing and Materials, except that the filter used for 100 percent polyester yarns shall be chemically strengthened soda-lime glass with a transmittance of less than 5 percent for wave lengths equal to or less than 305 nanometers and 90 percent or greater transmittance for wave lengths of 375 to 800 nanometers. The apparatus shall be operated without water spray at an air temperature of 60° ± 2 °Celsius (°C) measured at a point 25 ± 5 mm outside the specimen rack and midway in height. The temperature sensing element shall be shielded from radiation. The specimens shall be exposed to light from the carbon-arc for 100 hours and then conditioned as prescribed in paragraph (a) of this section. The colorfastness of the exposed and conditioned specimens shall be determined on the Geometric Gray Scale issued by the American Association of Textile Chemists and Colorists. The breaking strength of the specimens shall be determined by the procedure prescribed in paragraph (b) of this section. The median values for the breaking strengths determined on exposed and unexposed specimens shall be used to calculate the percentage of breaking strength retained.

(f) *Resistance to micro-organisms.* Webbing at least 508 millimeters (mm) in length from three seat belt assemblies shall first be preconditioned in accordance with Appendix A(1) and (2) of American Association of Textile Chemists and Colorists Test Method 381, ''Fungicides Evaluation on Textiles; Mildew and Rot Resistance of Textiles,'' and then subjected to Test I, ''Soil Burial Test'' of that test method. After soil-burial for a period of 2 weeks, the specimen shall be washed in water, dried and conditioned as prescribed in paragraph (a) of this section. The breaking strengths of the specimens shall be determined by the procedure prescribed in paragraph (b) of this section. The median values for the breaking strengths determined on exposed and unexposed specimens shall be used to calculate the percentage of breaking strength retained.

NOTE: This test shall not be required on webbing made from material which is inherently resistant to micro-organisms.

S5.2 *Hardware.*

(a) *Corrosion resistance.* Three seat belt assemblies shall be tested in accordance with American Society for Testing and Materials B11773, ''Standard Method of Salt Spray (Fog) Testing.'' Any surface coating or material not intended for permanent retention on the metal parts during service life shall be removed prior to preparation of the test specimens for testing. The period of test shall be 50 hours for all attachment hardware at or near the floor, consisting of two periods of 24 hours exposure to salt spray followed by 1 hour drying and 25 hours for all other hardware, consisting of one period of 24 hours exposure to salt spray followed by 1 hour drying. In the salt spray test chamber, the parts from the three assemblies shall be oriented differently, selecting those orientations most likely to develop corrosion on the larger areas. At the end of test, the seat belt assembly shall be washed thoroughly with water to remove the salt. After drying for at least 24 hours under standard laboratory conditions specified in S5.1(a) attachment hardware shall be examined for ferrous corrosion on significant surfaces, that is, all surfaces that can be contacted by a sphere 19 mm in diameter, and other hardware shall be examined for ferrous and nonferrous corrosion which may be transferred, either directly or by means of the webbing, to a person or his clothing during use of a seat belt assembly incorporating the hardware.

NOTE: When attachment and other hardware are permanently fastened, by sewing or other means, to the same piece of webbing, separate assemblies shall be used to test the two types of hardware. The test for corrosion resistance shall not be required for attachment hardware made from corrosion-resistant steel containing at least 11.5 percent chromium or for attachment hardware protected with an electrodeposited coating of nickel, or copper and nickel, as prescribed in S4.3(a). The assembly that has been used to test the corrosion resistance of the buckle shall be used to measure adjustment force, tilt-lock adjustment, and buckle latch in paragraphs (e), (f), and (g), respectively, of this section, assembly performance in S5.3

and buckle release force in paragraph (d) of this section.

(b) *Temperature resistance.* Three seat belt assemblies having plastic or nonmetallic hardware or having retractors shall be subjected to the conditions prescribed in Procedure D of American Society for Testing and Materials D756–78, ''Standard Practice for Determination of Weight and Shape Changes of Plastics under Accelerated Service Conditions.'' The dimension and weight measurement shall be omitted. Buckles shall be unlatched and retractors shall be fully retracted during conditioning. The hardware parts after conditioning shall be used for all applicable tests in S4.3 and S4.4.

(c) *Attachment hardware.* (1) Attachment bolts used to secure the pelvic restraint of a seat belt assembly to a motor vehicle shall be tested in a manner similar to that shown in Figure 3. The load shall be applied at an angle of 45° to the axis of the bolt through attachment hardware from the seat belt assembly, or through a special fixture which simulates the loading applied by the attachment hardware. The attachment hardware or simulated fixture shall be fastened by the bolt to the anchorage shown in Figure 3, which has a standard 7/16–20UNF–2B or ½-UNF–2B or metric equivalent threaded hole in a hardened steel plate at least 10 mm in thickness. The bolt shall be installed with two full threads exposed from the fully seated position. The appropriate force required by S4.3(c) shall be applied. A bolt from each of three seat belt assemblies shall be tested.

(2) Attachment hardware, other than bolts, designed to receive the ends of two seat belt assemblies shall be subjected to a tensile force of 26,689 N in a manner simulating use. The hardware shall be examined for fracture after the force is released. Attachment hardware from three seat belt assemblies shall be tested.

(3) Single attachment hook for connecting webbing to any eye bolt shall be tested in the following manner: The hook shall be held rigidly so that the retainer latch or keeper, with cotter pin or other locking device in place, is in a horizontal position as shown in Figure 4. A force of 667 N ± 9 N shall be applied vertically as near as possible to the free end of the retainer latch, and the movement of the latch by this force at the point of application shall be measured. The vertical force shall be released, and a force of 667 N ± 9 N shall be applied horizontally as near as possible to the free end of the retainer latch. The movement of the latch by this force at the point of load application shall be measured. Alternatively, the hook may be held in other positions, provided the forces are applied and the movements of the latch are measured at the points indicated in Figure 4. A single attachment hook from each of three seat belt assemblies shall be tested.

(d) *Buckle release.* (1) Three seat belt assemblies shall be tested to determine compliance with the maximum buckle release force requirements, following the assembly test in S5.3. After subjection to the force applicable for the assembly being tested, the force shall be reduced and maintained at 667 N on the assembly loop of a Type 1 seat belt assembly, 334 N on the components of a Type 2 seat belt assembly. The buckle release force shall be measured by applying a force on the buckle in a manner and direction typical of those which would be employed by a seat belt occupant. For push button-release buckles, the force shall be applied at least 3 mm from the edge of the push button access opening of the buckle in a direction that produces maximum releasing effect. For lever-release buckles, the force shall be applied on the centerline of the buckle lever or finger tab in a direction that produces maximum releasing effect.

(2) The area for application of release force on pushbutton actuated buckle shall be measured to the nearest 30 mm^2. The cylinder specified in S4.3(d) shall be inserted in the actuation portion of a lever released buckle for determination of compliance with the requirement. A buckle with other release actuation shall be examined for access of release by fingers.

(3) The buckle of a Type 1 or Type 2 seat belt assembly shall be subjected to a compressive force of 1779 N applied anywhere on a test line that is coincident with the center line of the belt extended through the buckle or on any line that extends over the center of the

release mechanism and intersects the extended centerline of the belt at an angle of 60°. The load shall be applied by using a curved cylindrical bar having a cross section diameter of 19 mm and a radius of curvature of 152 mm, placed with its longitudinal center line along the test line and its center directly above the point or the buckle to which the load will be applied. The buckle shall be latched, and a tensile force of 334 N shall be applied to the connected webbing during the application of the compressive force. Buckles from three seat belt assemblies shall be tested to determine compliance with paragraph S4.3(d)(3).

(e) *Adjustment Force.* Three seat belt assemblies shall be tested for adjustment force on the webbing at the buckle, or other manual adjusting device normally used to adjust the size of the assembly. With no load on the anchor end, the webbing shall be drawn through the adjusting device at a rate of 508 mm ±50 mm per minute and the maximum force shall be measured to the nearest 1 N after the first 25 mm of webbing movement. The webbing shall be precycled 10 times prior to measurement.

(f) *Tilt-lock adjustment.* This test shall be made on buckles or other manual adjusting devices having tilt-lock adjustment normally used to adjust the size of the assembly. Three buckles or devices shall be tested. The base of the adjustment mechanism and the anchor end of the webbing shall be oriented in planes normal to each other. The webbing shall be drawn through the adjustment mechanism in a direction to increase belt length at a rate of 508 mm ±50 mm per minute while the plane of the base is slowly rotated in a direction to lock the webbing. Rotation shall be stopped when the webbing locks, but the pull on the webbing shall be continued until there is a resistance of at least 89 N. The locking angle between the anchor end of the webbing and the base of the adjustment mechanism shall be measured to the nearest degree. The webbing shall be precycled 10 times prior to measurement.

(g) *Buckle latch.* The buckles from three seat belt assemblies shall be opened fully and closed at least 10 times. Then the buckles shall be clamped or firmly held against a flat surface so as to permit normal movement of buckle part, but with the metal mating plate (metal-to-metal buckles) or of webbing end (metal-to-webbing buckles) withdrawn from the buckle. The release mechanism shall be moved 200 times through the maximum possible travel against its stop with a force of 133 N ±13 N at a rate not to exceed 30 cycles per minute. The buckle shall be examined to determine compliance with the performance requirements of S4.3(g). A metal-to-metal buckle shall be examined to determine whether partial engagement is possible by means of any technique representative of actual use. If partial engagement is possible, the maximum force of separation when in such partial engagement shall be determined.

(h) *Nonlocking retractor.* After the retractor is cycled 10 times by full extension and retraction of the webbing, the retractor and webbing shall be suspended vertically and a force of 18 N shall be applied to extend the webbing from the retractor. The force shall be reduced to 13 N when attached to a pelvic restraint, or to 5 N per strap or webbing that contacts the shoulder of an occupant when retractor is attached to an upper torso restraint. The residual extension of the webbing shall be measured by manual rotation of the retractor drum or by disengaging the retraction mechanism. Measurements shall be made on three retractors. The location of the retractor attached to upper torso restraint shall be examined for visibility of reel during use of seat belt assembly in a vehicle.

NOTE: This test shall not be required on a nonlocking retractor attached to the free end of webbing which is not subjected to any tension during restraint of an occupant by the assembly.

(i) *Automatic-locking retractor.* Three retractors shall be tested in a manner to permit the retraction force to be determined exclusive of the gravitational forces on hardware or webbing being retracted. The webbing shall be fully extended from the retractor. While the webbing is being retracted, the average force or retraction within plus or minus 51 mm of 75 percent extension

(25 percent retraction) shall be determined and the webbing movement between adjacent locking segments shall be measured in the same region of extension. A seat belt assembly with automatic locking retractor in upper torso restraint shall be tested in a vehicle in a manner prescribed by the installation and usage instructions. The retraction force on the occupant of the seat belt assembly shall be determined before and after traveling for 10 minutes at a speed of 24 kilometers per hour (km/h) or more over a rough road (e.g., Belgian block road) where the occupant is subjected to displacement with respect to the vehicle in both horizontal and vertical directions. Measurements shall be made with the vehicle stopped and the occupant in the normal seated position.

(j) *Emergency-locking retractor.* A retractor shall be tested in a manner that permits the retraction force to be determined exclusive of the gravitational forces on hardware or webbing being retracted. The webbing shall be fully extended from the retractor, passing over or through any hardware or other material specified in the installation instructions. While the webbing is being retracted, the lowest force of retraction within plus or minus 51 mm of 75 percent extension shall be determined. A retractor that is sensitive to webbing withdrawal shall be subjected to an acceleration of 3 m/s^2 (0.3 g) within a period of 50 milliseconds (ms) while the webbing is at 75 percent extension, to determine compliance with S4.3(j)(2). The retractor shall be subjected to an acceleration of 7 m/s^2 (0.7 g) within a period of 50 milliseconds (ms), while the webbing is at 75 percent extension, and the webbing movement before locking shall be measured under the following conditions: For a retractor sensitive to webbing withdrawal, the retractor shall be accelerated in the direction of webbing retraction while the retractor drum's central axis is oriented horizontally and at angles of 45°, 90°, 135°, and 180° to the horizontal plane. For a retractor sensitive to vehicle acceleration, the retractor shall be:

(1) Accelerated in the horizontal plane in two directions normal to each other, while the retractor drum's central axis is oriented at the angle at which it is installed in the vehicle; and,

(2) Accelerated in three directions normal to each other while the retractor drum's central axis is oriented at angles of 45°, 90°, 135°, and 180° from the angle at which it is installed in the vehicle, unless the retractor locks by gravitational force when tilted in any direction to any angle greater than 45° from the angle at which it is installed in the vehicle.

(k) *Performance of retractor.* After completion of the corrosion-resistance test described in paragraph (a) of this section, the webbing shall be fully extended and allowed to dry for at least 24 hours under standard laboratory conditions specified in S5.1(a). The retractor shall be examined for ferrous and nonferrous corrosion which may be transferred, either directly or by means of the webbing, to a person or his clothing during use of a seat belt assembly incorporating the retractor, and for ferrous corrosion on significant surfaces if the retractor is part of the attachment hardware. The webbing shall be withdrawn manually and allowed to retract for 25 cycles. The retractor shall be mounted in an apparatus capable of extending the webbing fully, applying a force of 89 N at full extension, and allowing the webbing to retract freely and completely. The webbing shall be withdrawn from the retractor and allowed to retract repeatedly in this apparatus until 2,500 cycles are completed. The retractor and webbing shall then be subjected to the temperature resistance test prescribed in paragraph (b) of this section. The retractor shall be subjected to 2,500 additional cycles of webbing withdrawal and retraction. Then, the retractor and webbing shall be subjected to dust in a chamber similar to one illustrated in Figure 8 containing about 0.9 kg of coarse grade dust conforming to the specification given in Society of Automotive Engineering Recommended Practice J726, ''Air Cleaner Test Code'' Sept. 1979. The dust shall be agitated every 20 minutes for 5 seconds by compressed air, free of oil and moisture, at a gage pressure of 550 ±55 kPa entering through an orifice 1.5 ± 0.1 mm in diameter. The webbing shall be extended to the top of the chamber and

kept extended at all times except that the webbing shall be subjected to 10 cycles of complete retraction and extension within 1 to 2 minutes after each agitation of the dust. At the end of 5 hours, the assembly shall be removed from the chamber. The webbing shall be fully withdrawn from the retractor manually and allowed to retract completely for 25 cycles. An automatic-locking retractor or a nonlocking retractor attached to pelvic restraint shall be subjected to 5,000 additional cycles of webbing withdrawal and retraction. An emergency locking retractor or a nonlocking retractor attached to upper torso restraint shall be subjected to 45,000 additional cycles of webbing withdrawal and retraction between 50 and 100 per cent extension. The locking mechanism of an emergency locking retractor shall be actuated at least 10,000 times within 50 to 100 percent extension of webbing during the 50,000 cycles. At the end of test, compliance of the retractors with applicable requirements in S4.3 (h), (i), and (j) shall be determined. Three retractors shall be tested for performance.

S5.3 *Assembly performance—(a) Type 1 seat belt assembly*. Three complete seat belt assemblies, including webbing, straps, buckles, adjustment and attachment hardware, and retractors, arranged in the form of a loop as shown in Figure 5, shall be tested in the following manner:

(1) The testing machine shall conform to the requirements specified in S5.1(b). A double-roller block shall be attached to one head of the testing machine. This block shall consist of two rollers 102 mm in diameter and sufficiently long so that no part of the seat belt assembly touches parts of the block other than the rollers during test. The rollers shall be mounted on antifriction bearings and spaced 305 mm between centers, and shall have sufficient capacity so that there is no brinelling, bending or other distortion of parts which may affect the results. An anchorage bar shall be fastened to the other head of the testing machine.

(2) The attachment hardware furnished with the seat belt assembly shall be attached to the anchorage bar. The anchor points shall be spaced so that the webbing is parallel in the two sides of the loop. The attaching bolts shall be parallel to, or at an angle of 45° or 90° to the webbing, whichever results in an angle nearest to 90° between webbing and attachment hardware except that eye bolts shall be vertical, and attaching bolts or nonthreaded anchorages of a seat belt assembly designed for use in specific models of motor vehicles shall be installed to produce the maximum angle in use indicated by the installation instructions, utilizing special fixtures if necessary to simulate installation in the motor vehicle. Rigid adapters between anchorage bar and attachment hardware shall be used if necessary to locate and orient the adjustment hardware. The adapters shall have a flat support face perpendicular to the threaded hole for the attaching bolt and adequate in area to provide full support for the base of the attachment hardware connected to the webbing. If necessary, a washer shall be used under a swivel plate or other attachment hardware to prevent the webbing from being damaged as the attaching bolt is tightened.

(3) The length of the assembly loop from attaching bolt to attaching bolt shall be adjusted to about 1295 mm, or as near thereto as possible. A force of 245 N shall be applied to the loop to remove any slack in webbing at hardware. The force shall be removed and the heads of the testing machine shall be adjusted for an assembly loop between 1220 and 1270 mm in length. The length of the assembly loop shall then be adjusted by applying a force between 89 and 98 N to the free end of the webbing at the buckle, or by the retraction force of an automatic-locking or emergency-locking retractor. A seat belt assembly that cannot be adjusted to this length shall be adjusted as closely as possible. An automatic-locking or emergency locking retractor when included in a seat belt assembly shall be locked at the start of the test with a tension on the webbing slightly in excess of the retractive force in order to keep the retractor locked. The buckle shall be in a location so that it does not touch the rollers during test, but to facilitate making the buckle release test in S5.2(d) the buckle should

be between the rollers or near a roller in one leg.

(4) The heads of the testing machine shall be separated at a rate between 51 and 102 mm per minute until a force of 22,241 ± 222 N is applied to the assembly loop. The extension of the loop shall be determined from measurements of head separation before and after the force is applied. The force shall be decreased to 667 ± 45 N and the buckle release force measured as prescribed in S5.2(d).

(5) After the buckle is released, the webbing shall be examined for cutting by the hardware. If the yarns are partially or completely severed in a line for a distance of 10 percent or more of the webbing width, the cut webbing shall be tested for breaking strength as specified in S5.1(b) locating the cut in the free length between grips. If there is insufficient webbing on either side of the cut to make such a test for breaking strength, another seat belt assembly shall be used with the webbing repositioned in the hardware. A tensile force of 11,120 ± 111 N shall be applied to the components or a force of 22,241 ± 222 N shall be applied to the assembly loop. After the force is removed, the breaking strength of the cut webbing shall be determined as prescribed above.

(6) If a Type 1 seat belt assembly includes an automatic-locking retractor or an emergency-locking retractor, the webbing and retractor shall be subjected to a tensile force of 11,120 ± 111 N with the webbing fully extended from the retractor.

(7) If a seat belt assembly has a buckle in which the tongue is capable of inverted insertion, one of the three assemblies shall be tested with the tongue inverted.

(b) *Type 2 seat belt assembly*. Components of three seat belt assemblies shall be tested in the following manner:

(1) The pelvic restraint between anchorages shall be adjusted to a length between 1220 and 1270 mm, or as near this length as possible if the design of the pelvic restraint does not permit its adjustment to this length. An automatic-locking or emergency-locking retractor when included in a seat belt assembly shall be locked at the start of the test with a tension on the webbing slightly in excess of the retractive force in order to keep the retractor locked. The attachment hardware shall be oriented to the webbing as specified in paragraph (a)(2) of this section and illustrated in Figure 5. A tensile force 11,120 ± 111 N shall be applied on the components in any convenient manner and the extension between anchorages under this force shall be measured. The force shall be reduced to 334 ± 22 N and the buckle release force measured as prescribed in S5.2(d).

(2) The components of the upper torso restraint shall be subjected to a tensile force of 6,672 ± 67 N following the procedure prescribed above for testing pelvic restraint and the extension between anchorages under this force shall be measured. If the testing apparatus permits, the pelvic and upper torso restraints may be tested simultaneously. The force shall be reduced to 334 ± 22 N and the buckle release force measured as prescribed in S5.2(d).

(3) Any component of the seat belt assembly common to both pelvic and upper torso restraint shall be subjected to a tensile force of 13,344 ± 134 N.

(4) After the buckle is released in tests of pelvic and upper torso restraints, the webbing shall be examined for cutting by the hardware. If the yarns are partially or completely severed in a line for a distance of 10 percent or more of the webbing width, the cut webbing shall be tested for breaking strength as specified in S5.1(b) locating the cut in the free length between grips. If there is insufficient webbing on either side of the cut to make such a test for breaking strength, another seat belt assembly shall be used with the webbing repositioned in the hardware. The force applied shall be 11,120 ± 111 N for components of pelvic restraint, and 6,672 ± 67 N for components of upper torso restraint. After the force is removed, the breaking strength of the cut webbing shall be determined as prescribed above.

(5) If a Type 2 seat belt assembly includes an automatic-locking retractor or an emergency-locking retractor the webbing and retractor shall be subjected to a tensile force of 11,120 ± 111 N with the webbing fully extended from the retractor, or to a tensile force of

6,672 ± 67 N with the webbing fully extended from the retractor if the design of the assembly permits only upper torso restraint forces on the retractor.

(6) If a seat belt assembly has a buckle in which the tongue is capable of inverted insertion, one of the three assemblies shall be tested with the tongue inverted.

(c) *Resistance to buckle abrasion.* Seat belt assemblies shall be tested for resistance to abrasion by each buckle or manual adjusting device normally used to adjust the size of the assembly. The webbing of the assembly to be used in this test shall be exposed for 4 hours to an atmosphere having relative humidity of 65 per cent and temperature of 18 °C. The webbing shall be pulled back and forth through the buckle or manual adjusting device as shown schematically in Figure 7. The anchor end of the webbing (A) shall be attached to a mass (B) of 1.4 kg. The webbing shall pass through the buckle (C), and the other end (D) shall be attached to a reciprocating device so that the webbing forms an angle of 8° with the hinge stop (E). The reciprocating device shall be operated for 2,500 cycles at a rate of 18 cycles per minute with a stroke length of 203 mm. The abraded webbing shall be tested for breaking strength by the procedure described in paragraph S5.1(b).

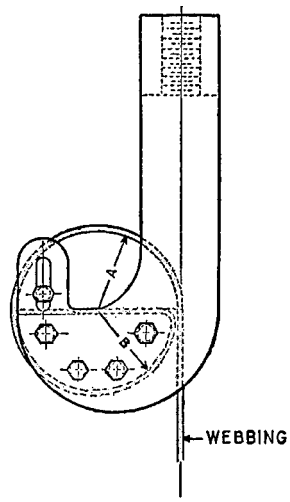

A 1 TO 2 INCHES OR 2.5 TO 5 CENTIMETERS

B A MINUS 0.06 INCH OR 0.15 CENTIMETER

FIGURE 1

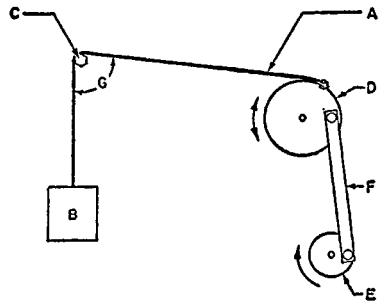

A – WEBBING

B – WEIGHT

C – HEXAGONAL ROD
STEEL – SAE 51416
ROCKWELL HARDNESS – B-97 TO B-101
SURFACE – COLD DRAWN FINISH
SIZE – 0.250 ± 0.001 INCH OR
6.35 ± 0.03 MILLIMETER
RADIUS ON EDGES – 0.020 ± 0.004 INCH OR
0.5 ± 0.1 MILLIMETER

D – DRUM DIAMETER – 16 INCHES OR
40 CENTIMETERS

E – CRANK

F – CRANK ARM

G – ANGLE BETWEEN WEBBING – 85 ± 2 DEGS.

FIGURE 2

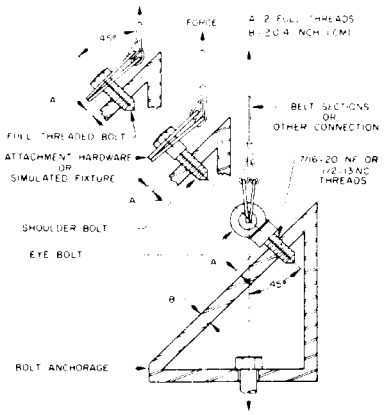

FIGURE 3

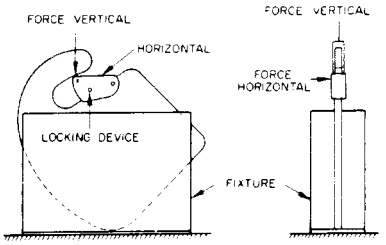

FIGURE 4
SINGLE ATTACHMENT HOOK

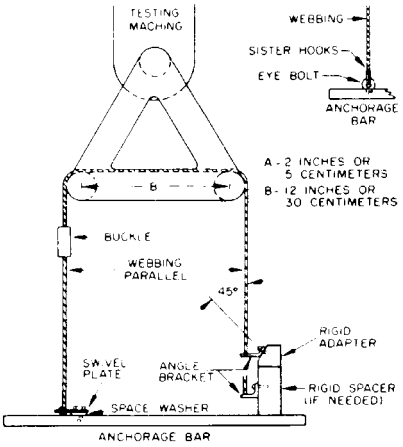

FIGURE 5

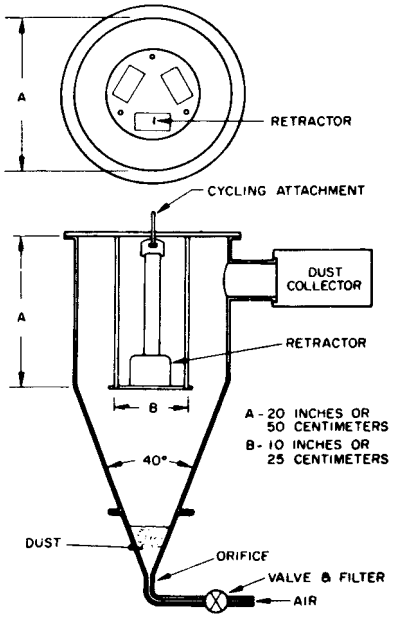

FIGURE 6

[34 F.R. 115
January 4, 1969]

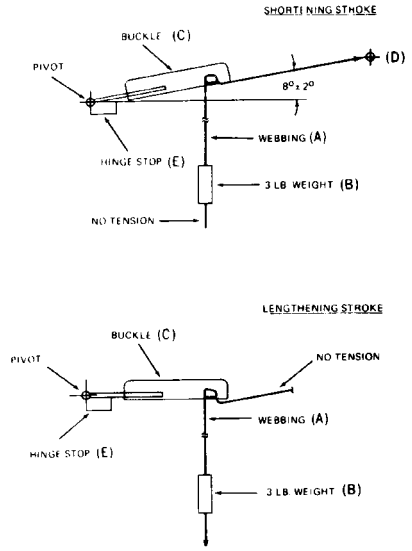

FIGURE 7

[44 FR 72139, Dec. 13, 1979, as amended at 45 FR 29048, May 1, 1980; 46 FR 2620, Jan. 12, 1981; 48 FR 30140, June 30, 1983; 49 FR 36508, Sept. 18, 1984; 51 FR 9813, Mar. 21, 1986; 51 FR 31774, Sept. 5, 1986; 52 FR 44912, Nov. 23, 1987; 56 FR 15299, Apr. 16, 1991; 56 FR 56325, Nov. 4, 1991; 59

FR 17994, Apr. 15, 1994; 61 FR 20171, May 6, 1996; 63 FR 28936, May 27, 1998; 63 FR 51003, Sept. 24, 1998; 64 FR 27206, May 19, 1999]

§ 571.210 Standard No. 210; Seat belt assembly anchorages.

S1. *Purpose and scope.* This standard establishes requirements for seat belt assembly anchorages to insure their proper location for effective occupant restraint and to reduce the likelihood of their failure.

S2. *Application.* This standard applies to passenger cars, multipurpose passenger vehicles, trucks, and buses.

S3. Definition. *Seat belt anchorage* means any component, other than the webbing or straps, involved in transferring seat belt loads to the vehicle structure, including, but not limited to, the attachment hardware, seat frames, seat pedestals, the vehicle structure itself, and any part of the vehicle whose failure causes separation of the belt from the vehicle structure.

S4. *Requirements.*

S4.1 *Type.*

S4.1.1 Seat belt anchorages for a Type 1 or a Type 2 seat belt assembly shall be installed for each designated seating position for which a Type 1 or a Type 2 seat belt assembly is required by Standard No. 208 (49 CFR 571.208). Seat belt anchorages for a Type 2 seat belt assembly shall be installed for each designated seating position for which a Type 2 seat belt assembly is required by Standard No. 208 (49 CFR 571.208).

S4.1.2 (a) Notwithstanding the requirement of S4.1.1, each vehicle manufactured on or after September 1, 1987 that is equipped with an automatic restraint at the front right outboard designated seating position, which automatic restraint cannot be used for securing a child restraint system or cannot be adjusted by the vehicle owner to secure a child restraint system solely through the use of attachment hardware installed as an item of original equipment by the vehicle manufacturer, shall have, at the manufacturer's option, either anchorages for a Type 1 seat belt assembly installed at that position or a Type 1 or Type 2 seat belt assembly installed at that position. If a manufacturer elects to install anchorages for a Type 1 seat belt assembly to comply with this requirement, those anchorages shall consist of, at a minimum, holes threaded to accept bolts that comply with S4.1(f) of Standard No. 209 (49 CFR 571.209).

(b) The requirement in S4.1.1 of this standard that seat belt anchorages for a Type 1 or a Type 2 seat belt assembly shall be installed for certain designated seating positions does not apply to any such seating positions that are equipped with a seat belt assembly that meets the frontal crash protection requirements of S5.1 of Standard No. 208 (49 CFR 571.208).

S4.2 *Strength.*

S4.2.1 Except as provided in S4.2.5, and except for side-facing seats, the anchorages, attachment hardware, and attachment bolts for any of the following seat belt assemblies shall withstand a 5,000 pound force when tested in accordance with S5.1 of this standard:

(a) Type 1 seat belt assembly; and

(b) Lap belt portion of either a Type 2 or automatic seat belt assembly, if such seat belt assembly is equipped with a detachable upper torso belt.

S4.2.2 Except as provided in S4.2.5, and except for side facing seats, the anchorages, attachment hardware, and attachment bolts for any of the following seat belt assemblies shall withstand a 3,000 pound force applied to the lap belt portion of the seat belt assembly simultaneously with a 3,000 pound force applied to the shoulder belt portion of the seat belt assembly, when tested in accordance with S5.2 of this standard:

(a) Type 2 and automatic seat belt assemblies that are installed to comply with Standard No. 208 (49 CFR 571.208); and

(b) Type 2 and automatic seat belt assemblies that are installed at a seating position required to have a Type 1 or Type 2 seat belt assembly by Standard No. 208 (49 CFR 571.208).

S4.2.3 Permanent deformation or rupture of a seat belt anchorage or its surrounding area is not considered to be a failure, if the required force is sustained for the specified time.