AUTHENTICATED
U.S. GOVERNMENT
INFORMATION
GPO

# SUBCHAPTER B—COMMON CARRIER SERVICES (CONTINUED)

## PART 42—PRESERVATION OF RECORDS OF COMMUNICATION COMMON CARRIERS

APPLICABILITY

Sec.
42.01 Applicability.

GENERAL INSTRUCTIONS

42.1 Scope of the regulations in this part.
42.2 Designation of a supervisory official.
42.3 Protection and storage of records.
42.4 Index of records.
42.5 Preparation and preservation of reproductions of original records.
42.6 Retention of telephone toll records.
42.7 Retention of other records.

SPECIFIC INSTRUCTIONS FOR CARRIERS OFFERING INTEREXCHANGE SERVICES

42.10 Public availability of information concerning interexchange services.
42.11 Retention of information concerning detariffed interexchange services.

AUTHORITY: Sec. 4(i), 48 Stat. 1066, as amended, 47 U.S.C. 154(i). Interprets or applies secs. 219 and 220, 48 Stat. 1077–78, 47 U.S.C. 219, 220.

SOURCE: 51 FR 32653, Sept. 15, 1986, unless otherwise noted.

APPLICABILITY

### § 42.01 Applicability.

This part prescribes the regulations governing the preservation of records of communication common carriers that are fully subject to the jurisdiction of the Commission.

GENERAL INSTRUCTIONS

### § 42.1 Scope of the regulations in this part.

(a) The regulations in this part apply to all accounts, records, memoranda, documents, papers, and correspondence prepared by or on behalf of the carrier as well as those which come into its possession in connection with the acquisition of property, such as by purchase, consolidation, merger, etc.

(b) The regulations in this part shall not be construed as requiring the preparation of accounts, records, or memoranda not required to be prepared by other regulations, such as the Uniform System of Accounts, except as provided hereinafter.

(c) The regulations in this part shall not be construed as excusing compliance with any other lawful requirement for the preservation of records.

### § 42.2 Designation of a supervisory official.

Each carrier subject to the regulations in this part shall designate one or more officials to supervise the preservation of its records.

### § 42.3 Protection and storage of records.

The carrier shall protect records subject to the regulations in this part from damage from fires, and other hazards and, in the selection of storage spaces, safeguard the records from unnecessary exposure to deterioration.

### § 42.4 Index of records.

Each carrier shall maintain at its operating company headquarters a master index of records. The master index shall identify the records retained, the related retention period, and the locations where the records are maintained. The master index shall be subject to review by Commission staff and the Commission shall reserve the right to add records, or lengthen retention periods upon finding that retention periods may be insufficient for its regulatory purposes. When any records are lost or destroyed before expiration of the retention period set forth in the master index, a certified statement shall be added to the master index, as soon as practicable, listing, as far as may be determined, the records lost or destroyed and describing the circumstances of the premature loss or destruction. At each office of the carrier where records are kept or stored, the carrier shall arrange, file, and currently index the records on site so that they may be readily identified and made available to representatives of the Commission.

### § 42.5 Preparation and preservation of reproductions of original records.

(a) Each carrier may use a retention medium of its choice to preserve records in lieu of original records, provided that they observe the requirements of paragraphs (b) and (c) of this section.

(b) A paper or microfilm record need not be created to satisfy the requirements of this part if the record is initially prepared in machine-readable medium such as punched cards, magnetic tapes, and disks. Each record kept in a machine-readable medium shall be accompanied by a statement clearly indicating the type of data included in the record and certifying that the information contained in it has been accurately duplicated. This statement shall be executed by a person duplicating the records. The records shall be indexed and retained in such a manner that they are easily accessible, and the carrier shall have the facilities available to locate, identify and reproduce the records in readable form without loss of clarity.

(c) Records may be retained on microfilm provided they meet the requirements of the Federal Business Records Act (28 U.S.C. 1732).

### § 42.6 Retention of telephone toll records.

Each carrier that offers or bills toll telephone service shall retain for a period of 18 months such records as are necessary to provide the following billing information about telephone toll calls: the name, address, and telephone number of the caller, telephone number called, date, time and length of the call. Each carrier shall retain this information for toll calls that it bills whether it is billing its own toll service customers for toll calls or billing customers for another carrier.

[51 FR 39536, Oct. 29, 1986]

### § 42.7 Retention of other records.

Except as specified in § 42.6, each carrier shall retain records identified in its master index of records for the period established therein. Records relevant to complaint proceedings not already contained in the index of records should be added to the index as soon as a complaint is filed and retained until final disposition of the complaint. Records a carrier is directed to retain as the result of a proceeding or inquiry by the Commission to the extent not already contained in the index will also be added to the index and retained until final disposition of the proceeding or inquiry.

## SPECIFIC INSTRUCTIONS FOR CARRIERS OFFERING INTEREXCHANGE SERVICES

### § 42.10 Public availability of information concerning interexchange services.

(a) A nondominant interexchange carrier (IXC) shall make available to any member of the public, in at least one location, during regular business hours, information concerning its current rates, terms and conditions for all of its interstate, domestic, interexchange services. Such information shall be made available in an easy to understand format and in a timely manner. Following an inquiry or complaint from the public concerning rates, terms and conditions for such services, a carrier shall specify that such information is available and the manner in which the public may obtain the information.

(b) In addition, a nondominant IXC that maintains an Internet website shall make such rate and service information specified in paragraph (a) of this section available on-line at its Internet website in a timely and easily accessible manner, and shall update this information regularly.

[64 FR 19725, Apr. 22, 1999]

### § 42.11 Retention of information concerning detariffed interexchange services.

(a) A nondominant IXC shall maintain, for submission to the Commission and to state regulatory commissions upon request, price and service information regarding all of the carrier's interstate, domestic, interexchange service offerings. The price and service information maintained for purposes of this paragraph shall include documents supporting the rates, terms, and conditions of the carrier's interstate, domestic, interexchange offerings. The information maintained pursuant to this

section shall be maintained in a manner that allows the carrier to produce such records within ten business days.

(b) The price and service information maintained pursuant to this section shall be retained for a period of at least two years and six months following the date the carrier ceases to provide services pursuant to such rates, terms and conditions.

[61 FR 59366, Nov. 22, 1996, as amended at 62 FR 59604, Nov. 4, 1997; 64 FR 19725, Apr. 22, 1999]

# PART 43—REPORTS OF COMMUNICATION COMMON CARRIERS AND CERTAIN AFFILIATES

Sec.
43.01 Applicability.
43.11 Reports of local exchange competition data.
43.21 Annual reports of carriers and certain affiliates.
43.41 [Reserved]
43.43 Reports of proposed changes in depreciation rates.
43.51 Contracts and concessions.
43.53 Reports regarding division of international toll communication charges.
43.61 Reports of international telecommunications traffic.
43.72 [Reserved]
43.81 Reports of carriers owned by foreign telecommunications entities.
43.82 International circuit status reports.

AUTHORITY: 47 U.S.C. 154; Telecommunications Act of 1996, Pub. L. 104–104, secs. 402 (b)(2)(B), (c), 110 Stat. 56 (1996) as amended unless otherwise noted. 47 U.S.C. 211, 219, 220 as amended.

SOURCE: 28 FR 13214, Dec. 5, 1963, unless otherwise noted.

## §43.01 Applicability.

(a) The sections in this part include requirements which have been promulgated under authority of sections 211 and 219 of the Communications Act of 1934, as amended, with respect to the filing by communication common carriers and certain of their affiliates of periodic reports and certain other data, but do not include certain requirements relating to the filing of information with respect to specific services, accounting systems and other matters incorporated in other parts of this chapter.

(b) Except as provided in paragraphs (c) and (d) of this section, carriers becoming subject to the provisions of the several sections of this part for the first time, shall, within thirty (30) days of becoming subject, file the required data as set forth in the various sections of this part.

(c) Carriers becoming subject to the provisions of §§43.21 and 43.43 for the first time, because their annual operating revenues equal or exceed the indexed revenue threshold for a given year, shall begin collecting data pursuant to such provisions in the calendar year following the publication of that indexed revenue threshold in the FEDERAL REGISTER. With respect to such initial filing of reports by any carrier, pursuant to the provisions of §43.21 (d), (e), (f), (g), (h), (i), (j), and (k), the carrier is to begin filing data for the calendar year following the publication of that indexed revenue threshold in the FEDERAL REGISTER by April 1 of the second calendar year following publication of that indexed revenue threshold in the FEDERAL REGISTER.

(d) Common carriers subject to the provisions of §43.11 shall file data semi-annually. Reports shall be filed each year on or before March 1st (reporting data about their deployment of local exchange services as of December 31 of the prior year) and September 1st (reporting data about their deployment of local exchange services as of June 31 of the current year). Common carriers becoming subject to the provisions of §43.11 for the first time within a calendar year shall file data for the reporting period in which they become eligible and semi-annually thereafter. Common carriers subject to the provisions of §43.11 shall make an initial filing of the FCC Form 477 on May 15, 2000 (reporting data about their deployment of local exchange services as of December 31, 1999).

[28 FR 13214, Dec. 5, 1963, as amended at 62 FR 39778, July 24, 1997; 65 FR 19685, Apr. 12, 2000]

## §43.11 Reports of local exchange competition data

(a) All common carriers and their affiliates (as defined in 47 U.S.C. 153 (1)) providing telephone exchange or exchange access service (as defined in 47

U.S.C. 153 (16) and (47)) or commercial mobile radio service (CMRS) providers offering mobile telephony (as defined in section 20.15(b)(1) of this chapter), which provide at least 10,000 voice-grade equivalent lines or wireless channels or have at least 10,000 end-user consumers in a given state, shall file with the Commission a completed FCC Form 477, in accordance with the Commission's rules and the instructions to the FCC Form 477, for each state in which they exceed this threshold.

(b) Respondents identified in paragraph (a) of this section shall file the FCC Form 477 on diskette or via e-mail, as directed in the instructions to the FCC Form 477. Upon submission of each report, an original certification letter (as contained in the instructions to FCC Form 477) signed by the responsible official shall be mailed to the Commission.

(c) Respondents may make requests for Commission non-disclosure of provider-specific data contained in the Form 477 under § 0.459 of this chapter by so indicating on the Form 477 at the time that the subject data are submitted. The Commission shall make all decisions regarding non-disclosure of provider-specific information, except that the Chief of the Common Carrier Bureau may release provider-specific information to a state commission, provided that the state commission has protections in place that would preclude disclosure of any confidential information.

(d) Respondents identified in paragraph (b) of this section shall file a revised version of FCC Form 477 if and when they discover a significant error in their filed FCC Form 477. For counts, a difference amounting to 5 percent of the filed number is considered significant. For percentages, a difference of 5 percentage points is considered significant.

(e) Failure to file FCC Form 477 in accordance with the Commission's rules and the instructions to Form 477 may lead to enforcement action pursuant to the Act and any other applicable law.

[65 FR 19685, Apr. 12, 2000]

## § 43.21 Annual reports of carriers and certain affiliates.

(a) Communication common carriers having annual operating revenues in excess of the indexed revenue threshold, as defined in § 32.9000, and certain companies (as indicated in paragraph (b) of this section) directly or indirectly controlling such carriers shall file with the Commission annual reports or an annual letter as provided in this section. Except as provided in paragraph (b) of this section, each annual report required by this section shall be filed no later than April 1 of each year, covering the preceding calendar year. It shall be filed on the appropriate report form prescribed by the Commission (see § 1.785 of this chapter) and shall contain full and specific answers to all questions propounded and information requested in the currently effective report forms. The number of copies to be filed shall be specified in the applicable report form. At least one copy of this report shall be signed on the signature page by the responsible accounting officer. A copy of each annual report shall be as retained in the principal office of the respondent and shall be filed in such manner to be readily available for reference and inspection.

(b) Each company, not itself a communication common carrier, that directly or indirectly controls any communication common carrier that has annual operating revenues equal to or above the indexed revenue threshold, as defined in § 32.9000, shall file annually with the Commission, not later than the date prescribed by the Securities and Exchange Commission for its purposes, two complete copies of any annual report Forms 10–K (or any superseding form) filed with that Commission.

(c) Each miscellaneous common carrier (as defined by § 21.2 of this chapter) with operating revenues for a calendar year in excess of the indexed revenue threshold, as defined in § 32.9000, shall file with the Common Carrier Bureau Chief a letter showing its operating revenues for that year and the value of its total communications plant at the end of that year. This letter must be

filed no later than April 1 of the following year. Those miscellaneous common carriers with annual operating revenues that equal or surpass the indexed revenue threshold for the first time may file the letter up to one month after publication of the adjusted revenue threshold in the FEDERAL REGISTER, but in no event shall such carriers be required to file the letter prior to April 1.

(d) Each communications common carrier required by order to file a manual allocating its costs between regulated and nonregulated operations shall file, on or before April 1:

(1) A three-year forecast of regulated and nonregulated use of network plant for the current calendar year and the two calendar years following, and investment pool projections and allocations for the current calendar year; and

(2) A report of the actual use of network plant investment for the prior calendar year.

(e) Each local exchange carrier with annual operating reveunes equal to or above the indexed revenue threshold shall file, no later than April 1 of each year, reports showing:

(1) Its revenues, expenses and investment for all accounts established in part 32 of this chapter, on an operating company basis,

(2) The same part 32 of this chapter, on a study area basis, with data for regulated and nonregulated operations for those accounts which are related to the carrier's revenue requirement, and

(3) The separations categories on a study area basis, with each category further divided into access elements and a nonaccess interstate category.

(f) Each local exchange carrier with operating revenues for the preceding year that equal or exceed the indexed revenue threshold shall file, no later than April 1 of each year, a report showing for the previous calendar year its revenues, expenses, taxes, plant in service, other investment and depreciation reserves, and other such data as are required by the Commission, on computer media prescribed by the Commission. The total operating results shall be allocated between regulated and nonregulated operations, and the regulated data shall be further divided into the following categories: State and interstate, and the interstate will be further divided into common line, traffic sensitive access, special access, and nonaccess.

(g) Each local exchange carrier for whom price cap regulation is mandatory and every local exchange carrier that elects to be covered by the price cap rules shall file, by April 1 of each year, a report designed to capture trends in service quality under price cap regulation. The report shall contain data relative to network measures of service quality, as defined by the Common Carrier Bureau, from the previous calendar year on a study area basis.

(h) Each local exchange carrier for whom price regulation is mandatory shall file, by April 1 of each year, a report designed to capture trends in service quality under price cap regulation. The report shall contain data relative to customer measures of service quality, as defined by the Common Carrier Bureau, from the previous calendar year on a study area basis.

(i) Each local exchange carrier for whom price regulation is mandatory shall file, by April 1 of each year, a report containing data from the previous calendar year on a study area basis that are designed to capture trends in telephone industry infrastructure development under price cap regulation.

(j) Each local exchange carrier with annual operating revenues that equal or exceed the indexed revenue threshold shall file, no later than April 1 of each year, a report containing data from the previous calendar year on an operating company basis. Such report shall combine statistical data designed to monitor network growth, usage, and reliability.

(k) Each designated interstate carrier with operating revenues for the preceding year that equal or exceed the indexed revenue threshold shall file, no later than April 1 of each year, a report showing for the previous calendar year its revenues, expenses, taxes, plant in service, other investments and depreciation reserves, and such other data as are required by the Commission, on computer media prescribed by the Commission. The total operating results shall be allocated between regulated and nonregulated operations, and

the regulated data shall be further divided into the following categories: State and interstate, and the interstate will be further divided into common line, traffic sensitive access, special access, and nonaccess.

[28 FR 13214, Dec. 5, 1963, as amended at 49 FR 10122, Mar. 19, 1984; 50 FR 41153, Oct. 9, 1985; 51 FR 37024, Oct. 17, 1986; 52 FR 35918, Sept. 24, 1987; 58 FR 36143, July 6, 1993; 61 FR 50245, Sept. 25, 1996; 62 FR 39778, July 24, 1997]

### § 43.41 [Reserved]

### § 43.43 Reports of proposed changes in depreciation rates.

(a) Each communication common carrier with annual operating expenses that equal or exceed the indexed revenue threshold, as defined in § 32.9000, and that has been found by this Commission to be a dominant carrier with respect to any communications service shall, before making any changes in the depreciation rates applicable to its operated plant, file with the Commission a report furnishing the data described in the subsequent paragraphs of this section, and also comply with the other requirements thereof.

(b) Each such report shall contain the following:

(1) A schedule showing for each class and subclass of plant (whether or not the depreciation rate is proposed to be changed) an appropriate designation therefor, the depreciation rate currently in effect, the proposed rate, and the service-life and net-salvage estimates underlying both the current and proposed depreciation rates;

(2) An additional schedule showing for each class and subclass, as well as the totals for all depreciable plant, (i) the book cost of plant at the most recent date available, (ii) the estimated amount of depreciation accruals determined by applying the currently effective rate to the amount of such book cost, (iii) the estimated amount of depreciation accruals determined by applying the rate proposed to be used to the amount of such book cost, and (iv) the difference between the amounts determined in paragraphs (b)(2) (ii) and (iii) of this section;

(3) A statement giving the reasons for the proposed change in each rate;

(4) A statement describing the method or methods employed in the development of the service-life and salvage estimates underlying each proposed change in a depreciation rate; and

(5) The date as of which the revised rates are proposed to be made effective in the accounts.

(c) Except as specified in paragraphs (c)(1) and (c)(3) of this section, when the change in the depreciation rate proposed for any class or subclass of plant (other than one occasioned solely by a shift in the relative investment in the several subclasses of the class of plant) amounts to twenty percent (20%) or more of the rate currently applied thereto, or when the proposed change will produce an increase or decrease of one percent (1%) or more of the aggregate depreciation charges for all depreciable plant (based on the amounts determined in compliance with paragraph (b)(2) of this section) the carrier shall supplement the data required by paragraph (b) of this section) with copies of the underlying studies, including calculations and charts, developed by the carrier to support service-life and net-salvage estimates. If a carrier must submit data of a repetitive nature to comply with this requirement, the carrier need only submit a fully illustrative portion thereof.

(1) A Local Exchange Carrier regulated under price caps, pursuant to §§ 61.41 through 61.49 of this chapter, is not required to submit the supplemental information described in paragraph (c) introductory text of this section for a specific account if: The carrier's currently prescribed depreciation rate for the specific accounts derived from basic factors that fall within the basic factor ranges established for that same account; and the carrier's proposed depreciation rate for the specific account would also be derived from basic factors that fall within the basic factor ranges for the same account.

(2) Local Exchange Carriers that are regulated under price caps, pursuant to §§ 61.41 through 61.49 of this chapter, and have selected basic factors that fall within the basic factor ranges for all accounts are exempt from paragraphs (b)(3), (b)(4), and (c) introductory text of this section. They shall instead comply with paragraphs (b)(1),

(b)(2) and (b)(5) of this section and provide a book and theoretical reserve summary and a summary of basic factors underlying proposed rates by account.

(3) Interexchange carriers regulated under price caps, pursuant to §§61.41 through 61.49 of this chapter, are exempted from submitting the supplemental information as described in paragraph (c) introductory text of this section. They shall instead submit: Generation data, a summary of basic factors underlying proposed depreciation rates by account and a short narrative supporting those basic factors, including company plans of forecasted retirements and additions, recent annual retirements, salvage and cost of removal.

(d) Each report shall be filed in duplicate and the original shall be signed by the responsible official to whom correspondence related thereto should be addressed.

(e) Unless otherwise directed or approved by the Commission, the following shall be observed: Proposed changes in depreciation rates shall be filed at least ninety (90) days prior to the last day of the month with respect to which the revised rates are first to be applied in the accounts (*e.g.*, if the new rates are to be first applied in the depreciation accounts for September, they must be filed on or before July 1). Such rates may be made retroactive to a date not prior to the beginning of the year in which the filing is made: *Provided however*, that in no event shall a carrier for which the Commission has prescribed depreciation rates make any changes in such rates unless the changes are prescribed by the Commission. Carriers who select basic factors that fall within the basic factor ranges for all accounts are exempt from depreciation rate prescription by the Commission.

(f) Any changes in depreciation rates that are made under the provisions of paragraph (e) of this section shall not be construed as having been approved by the Commission unless the carrier has been specifically so informed.

[28 FR 13214, Dec. 5, 1963, as amended at 30 FR 3223, Mar. 9, 1965; 53 FR 49987, Dec. 13, 1988; 58 FR 58790, Nov. 4, 1993; 61 FR 50246, Sept. 25, 1996; 62 FR 39779, July 24, 1997; 65 FR 18931, Apr. 10, 2000]

EFFECTIVE DATE NOTE: At 65 FR 18931, Apr. 10, 2000, §43.43 was amended by revising paragraphs (c) and (e). These paragraphs contain information collection requirements and will not become effective until approval by the Office of Management and Budget.

### §43.51 Contracts and concessions.

(a) Any communications common carrier that: is engaged in domestic communications and has not been classified as nondominant pursuant to §61.3 of this chapter or, except as provided in paragraphs (f) and (g) of this section, is engaged in foreign communications, and enters into a contract with another carrier, including an operating agreement with a communications entity in a foreign point for the provision of a common carrier service between the United States and that point; must file with the Commission, within thirty (30) days of execution, a copy of each contract, agreement, concession, license, authorization, operating agreement or other arrangement to which it is a party and amendments thereto with respect to the following:

(1) The exchange of services;

(2) Except as provided in paragraph (c) of this section, the interchange or routing of traffic and matters concerning rates, accounting rates, division of tolls, or the basis of settlement of traffic balances; and

(3) The rights granted to the carrier by any foreign government for the landing, connection, installation, or operation of cables, land lines, radio stations, offices, or for otherwise engaging in communication operations.

(b) If the agreement referred to in this section is made other than in writing, a certified statement covering all details thereof must be filed by at least one of the parties to the agreement. Each other party to the agreement which is also subject to these provisions may, in lieu of also filing a copy

of the agreement, file a certified statement referencing the filed document. The Commission may, at any time and upon reasonable request, require any communication common carrier not subject to the provisions of this section to submit the documents referenced in this section.

(c) With respect to contracts coming within the scope of paragraph (a)(2) of this section between subject telephone carriers and connecting carriers, except those contracts related to communications with foreign or overseas points, such documents shall not be filed with the Commission; but each subject telephone carrier shall maintain a copy of such contracts to which it is a party in appropriate files at a central location upon its premises, copies of which shall be readily accessible to Commission staff and members of the public upon reasonable request therefor; and upon request by the Commission, a subject telephone carrier shall promptly forward individual contracts to the Commission.

(d) Any U.S. carrier that interconnects an international private line to the U.S. public switched network, at its switch, including any switch in which the carrier obtains capacity either through lease or otherwise, shall file annually with the Chief of the International Bureau a certified statement containing the number and type (e.g., a 64-kbps circuit) of private lines interconnected in such a manner. The certified statement shall specify the number and type of interconnected private lines on a country specific basis. The identity of the customer need not be reported, and the Commission will treat the country of origin information as confidential. Carriers need not file their contracts for such interconnections, unless they are specifically requested to do so. These reports shall be filed on a consolidated basis on February 1 (covering international private lines interconnected during the preceding January 1 to December 31 period) of each year. International private lines to countries for which the Commission has authorized the provision of switched basic services over private lines at any time during a particular reporting period are exempt from this requirement.

(e) *International settlements policy.* (1) Except as provided in paragraph (g) of this section, if a carrier files an operating agreement (whether in the form of a contract, concession, license, etc.) referred to in paragraph (a) of this section to begin providing switched voice, telex, telegraph, or packet-switched service between the United States and a foreign point and the terms and conditions of such agreement relating to the exchange of services, interchange or routing of traffic and matters concerning rates, accounting rates, division of tolls, the allocation of return traffic, or the basis of settlement of traffic balances, are not identical to the equivalent terms and conditions in the operating agreement of another carrier providing the same or similar service between the United States and the same foreign point, the carrier must also file with the International Bureau a modification request under § 64.1001 of this chapter. Unless a carrier is providing switched voice, telex, telegraph, or packet-switched service between the United States and a foreign point pursuant to an operating agreement that is exempt from the international settlements policy under paragraph (g) of this section, the carrier shall not bargain for or agree to accept more than its proportionate share of return traffic.

(2) Except as provided in paragraph (g) of this section, if a carrier files an amendment to the operating agreement referred to in paragraph (a) of this section under which it already provides switched voice, telex, telegraph, or packet-switched service between the United States and a foreign point, and other carriers provide the same or similar service to the same foreign point, and the amendment relates to the exchange of services, interchange or routing of traffic and matters concerning rates, accounting rates, division of tolls, the allocation of return traffic, or the basis of settlement of traffic balances, the carrier must also file with the International Bureau a modification request under § 64.1001 of this chapter.

(f) *Confidential treatment.* (1) A carrier providing service on an international route that is exempt from the international settlements policy under

paragraph (g)(2) of this section, but that is required by paragraph (a) or (b) of this section to file a contract covering that route with the Commission, may request confidential treatment under §0.457 of this chapter for the rates, terms and conditions that govern the settlement of U.S. international traffic.

(2) Carriers requesting confidential treatment under this paragraph must include the information specified in §64.1001(c) of this chapter. Such filings shall be made with the Commission, with a copy to the Chief, International Bureau. The transmittal letter accompanying the confidential filing shall clearly identify the filing as responsive to §43.51(f).

(g) Exemption from the international settlements policy and contract filing requirements.

(1) A carrier that enters into a contract, including an operating agreement, for the provision of a common carrier service between the United States and a foreign point with a carrier that lacks market power in that foreign market is not subject to the requirements of paragraphs (a), (b) or (e) of this section.

(i) A foreign carrier lacks market power for purposes of paragraph (g)(1) of this section if it does not appear on the Commission's list of foreign carriers that do not qualify for the presumption that they lack market power in particular foreign points. The list of foreign carriers that do not qualify for the presumption that they lack market power in particular foreign points is available from the International Bureau's World Wide Web site at http://www.fcc.gov/ib.

(ii) The Commission will include on the list of foreign carriers that do not qualify for the presumption that they lack market power in particular foreign points any foreign carrier that has 50 percent or more market share in the international transport or local access markets of a foreign point. A party that seeks to remove such a carrier from the Commission's list bears the burden of submitting information to the Commission sufficient to demonstrate that the foreign carrier lacks 50 percent market share in the international transport and local access markets on the foreign end of the route or that it nevertheless lacks sufficient market power on the foreign end of the route to affect competition adversely in the U.S. market. A party that seeks to add a carrier to the Commission's list bears the burden of submitting information to the Commission sufficient to demonstrate that the foreign carrier has 50 percent or more market share in the international transport or local access markets on the foreign end of the route or that it nevertheless has sufficient market power to affect competition adversely in the U.S. market.

(2) A carrier that enters into a contract, including an operating agreement, with a carrier in a foreign point for the provision of a common carrier service between the United States and that point is not subject to the international settlements policy in paragraph (e) of this section if the foreign point appears on the Commission's list of international routes that the Commission has exempted from the international settlements policy. The list of exempt routes is available from the International Bureau's World Wide Web site at http://www.fcc.gov/ib.

(i) A party that seeks to add a foreign market to the list of markets that are exempt from the international settlements policy must show that U.S. carriers are able to terminate at least 50 percent of U.S.-billed traffic in the foreign market at rates that are at least 25 percent below the benchmark settlement rate adopted for that country in IB Docket No. 96–261.

(ii) A party that seeks to remove a foreign market from the list of markets that are exempt from the international settlements policy must show that U.S. carriers are unable to terminate at least 50 percent of U.S.-billed traffic in the foreign market at rates that are at least 25 percent below the benchmark settlement rate adopted for that country in IB Docket No. 96–261.

NOTE TO PARAGRAPH (g): The Commission's benchmark settlement rates are available in International Settlement Rates, IB Docket

No. 96–261, *Report and Order*, 12 FCC Rcd 19,806, 62 FR 45758 (August 29, 1997).

[51 FR 45890, Dec. 23, 1986, as amended at 56 FR 25371, June 4, 1991; 57 FR 647, Jan. 8, 1992; 58 FR 48323, Sept. 15, 1993; 60 FR 52866, Oct. 11, 1995; 61 FR 59200, Nov. 21, 1996; 62 FR 5541, Feb. 6, 1997; 62 FR 8633, Feb. 26, 1997; 62 FR 64751, Dec. 9, 1997; 64 FR 34740, June 29, 1999]

### § 43.53 Reports regarding division of international toll communication charges.

(a) Each communication common carrier engaged directly in the transmission or reception of telegraph communications between the continental United States and any foreign country (other than one to which the domestic word-count applies) shall file a report with the Commission within thirty (30) days of the date of any arrangement concerning the division of the total telegraph charges on such communications other than transiting. A carrier first becoming subject to the provisions of this section must, within thirty (30) days thereafter, file with the Commission a report covering any such existing arrangements.

(b) In the event that any change is made which affects data previously filed, a revised page incorporating such change or changes must be filed with the Commission not later than thirty (30) days from the date the change is made, provided, however, that any change in the amount of foreign participation in charges for outbound communications or in the respondent's participation in charges for inbound communications must be filed not later than thirty (30) days from the date the change is agreed upon.

(c) A single copy of each such report must be filed in a format that contains a clear, concise and definite statement of the arrangements.

[51 FR 45891, Dec. 23, 1986, as amended at 52 FR 8453, Mar. 18, 1987]

### § 43.61 Reports of international telecommunications traffic.

(a) Each common carrier engaged in providing international telecommunications service between the area comprising the continental United States, Alaska, Hawaii, and off-shore U.S. points and any country or point outside that area shall file a report with the Commission not later than July 31 of each year for service actually provided in the preceding calendar year.

(1) The information contained in the reports shall include actual traffic and revenue data for each and every service provided by a common carrier, divided among service billed in the United States, service billed outside the United States, and service transiting the United States. In addition, it shall include the number of minutes of outbound and inbound traffic settled pursuant to each alternative arrangement entered into pursuant to § 64.1002 of this chapter.

(2) Each common carrier shall submit a revised report by October 31 identifying and correcting any inaccuracies included in the annual report exceeding five percent of the reported figure.

(3) The information required under this section shall be furnished in conformance with the instructions and reporting requirements prepared under the direction of the Chief, Common Carrier Bureau, prepared and published as a manual, in consultation and coordination with the Chief, International Bureau.

(b) *Quarterly Traffic Reports.* (1) Each common carrier engaged in providing international telecommunicaitons service between the area comprising the continental United States, Alaska, Hawaii, and off-shore U.S. points and any country or point outside that area shall file with the Commission, in addition to the report required by paragraph (a) of this section, actual traffic and revenue data for each calendar quarter in which the carrier's quarterly minutes exceed the corresponding minutes for all carriers by one or more of the following tests:

(i) The carrier's aggregate minutes of facilities-based or facilities resale switched telephone traffic for service billed in the United States are greater than 1.0 percent of the total of such minutes of international traffic for all U.S. carriers published in the Commission's most recent § 43.61 annual report of international telecommunications traffic;

(ii) The carrier's aggragate minutes of facilities-based or facilities resale switched telephone traffic for service billed outside the United States are

greater than 1.0 percent of the total of such minutes of international traffic for all U.S. carriers published in the Commission's most recent §43.61 annual report of international telecommunications traffic;

(iii) The carrier's aggregate minutes of facilities-based or facilities switched telephone traffic for service billed in the United States for any foreign country are greater than 2.5 percent of the total of such minutes of international traffic for that country for all U.S. carriers published in the Commission's most recent §43.61 annual report of international telecommunications traffic; or

(iv) The carrier's aggregate minutes of facilities-based or facilities resale switched telephone traffic for service billed outside the United States for any foreign country are greater than 2.5 percent of the total of such minutes of international traffic for that country for all U.S. carriers published in the Commission's most recent §43.61 annual report of international telecommunications traffic.

(2) Except as provided in this paragraph, the quarterly reports required by paragraph (b)(1) of this section shall be filed in the same format as, and in conformance with, the filing procedures for the annual reports required by paragraph (a) of this section.

(i) Carriers filing quarterly reports shall include in those reports only their provision of switched, facilities-based telephone service and switched, facilities resale telephone service.

(ii) The quarterly reports required by paragraph (b)(1) of this section shall be filed with the Commission no later than April 30 for the prior January through March quarter; no later than July 31 for the prior April through June quarter; no later than October 31 for the prior July through September quarter; and no later than January 31 for the prior October through December period.

(c) Each common carrier engaged in the resale of international switched services that is affiliated with a foreign carrier that has sufficient market power on the foreign end of an international route to affect competition adversely in the U.S. market and that collects settlement payments from U.S. carriers shall file a quarterly version of the report required in paragraph (a) of this section for its switched resale services on the dominant route within 90 days from the end of each calendar quarter. For purposes of this paragraph, *affiliated* and *foreign carrier* are defined in §63.09 of this chapter.

[57 FR 8580, Mar. 11, 1992, as amended at 60 FR 5333, Jan. 27, 1995; 62 FR 5541, Feb. 6, 1997; 62 FR 45761, Aug. 29, 1997; 64 FR 19061, Apr. 19, 1999]

### §43.72 [Reserved]

### §43.81 Reports of carriers owned by foreign telecommunications entities.

(a) The following carriers are required to file with the Commission an annual revenue and traffic report in triplicate with respect to all common carrier telecommunications services they offer within the United States.

(1) Cable and Wireless Communications, Inc.;

(2) FTCC Communications Inc.; and

(3) Consortium Communications International, Inc.

(b) The Chief, International Bureau has the authority to require that no more than six additional communications carriers owned by foreign telecommunications entities that are classified as dominant for the provision of international telecommunications services originating or terminating in the United States file §43.81 reports.

(c) The report should be captioned—§43.81 report and should provide the following:

(1) Revenues, number of messages and number of minutes for message telephone service traffic originated and/or terminated by the filing carrier;

(2) Revenues, number of messages, and number of minutes for telex traffic originated and/or terminated by the filing carrier;

(3) Revenues, number of messages, and number of minutes for telegraph traffic originated and/or terminated by the filing carrier;

(4) Revenues, number of messages, and number of minutes for any other basic switched services (specified by service) originated and/or terminated by the filing carrier; and

(5) Number of leases and revenues from private line services provided by the filing carrier.

(d) Section 43.81 Reports for:

(1) The calendar year 1988 must be filed on or before August 1, 1989;

(2) The calendar year 1989 must be filed on or before August 1, 1990; and

(3) The calendar year 1990 must be filed on or before August 1, 1991.

(e) These reports shall apply to nine or fewer persons and therefore are not subject to the review of the Office of Management and Budget under the Paperwork Reduction Act.

[54 FR 2130, Jan. 19, 1989, as amended at 60 FR 5333, Jan. 27, 1995]

### § 43.82 International circuit status reports.

(a) Each facilities-based common carrier engaged in providing international telecommunications service between the area comprising the continental United States, Alaska, Hawaii, and offshore U.S. points and any country or point outside that area shall file a circuit status report with the Chief, International Bureau, not later than March 31 each year showing the status of its circuits used to provide international services as of December 31 of the preceding calendar year.

(b) The information contained in the reports shall include the total number of activated and the total number of idle circuits by the categories of submarine cable, satellite and terrestrial facilities to geographic points outside the United States for the services designated by the Chief, International Bureau.

(c) The information required under this section shall be furnished in conformance with instructions and reporting requirements prepared under the direction of the Chief, International Bureau, prepared and published as a manual.

(d) Authority is hereby delegated to the Chief, International Bureau to prepare instructions and reporting requirements for the filing of the annual international circuit status reports.

[60 FR 51368, Oct. 2, 1995]

# PART 51—INTERCONNECTION

## Subpart A—General Information

Sec.
51.1 Basis and purpose.
51.3 Applicability to negotiated agreements.
51.5 Terms and definitions.

## Subpart B—Telecommunications Carriers

51.100 General duty.

## Subpart C—Obligations of All Local Exchange Carriers

51.201 Resale.
51.203 Number portability.
51.205 Dialing parity: General.
51.207 Local dialing parity.
51.209 Toll dialing parity.
51.211 Toll dialing parity implementation schedule.
51.213 Toll dialing parity implementation plans.
51.215 Dialing parity: Cost recovery.
51.217 Nondiscriminatory access: Telephone numbers, operator services, directory assistance services, and directory listings.
51.219 Access to rights of way.
51.221 Reciprocal compensation.
51.223 Application of additional requirements.
51.230 Presumption of acceptability for deployment of an advanced services loop technology.
51.231 Provision of information on advanced services deployment.
51.232 Binder group management.
51.233 Significant degradation of services caused by deployment of advanced services.

## Subpart D—Additional Obligations of Incumbent Local Exchange Carriers

51.301 Duty to negotiate.
51.303 Preexisting agreements.
51.305 Interconnection.
51.307 Duty to provide access on an unbundled basis to network elements.
51.309 Use of unbundled network elements.
51.311 Nondiscriminatory access to unbundled network elements.
51.313 Just, reasonable and nondiscriminatory terms and conditions for the provision of unbundled network elements.
51.315 Combination of unbundled network elements.
51.317 Standards for requiring the unbundling of network elements.
51.319 Specific unbundling requirements.
51.321 Methods of obtaining interconnection and access to unbundled elements under section 251 of the Act.

51.323 Standards for physical collocation and virtual collocation.
51.325 Notice of network changes: Public notice requirement.
51.327 Notice of network changes: Content of notice.
51.329 Notice of network changes: Methods for providing notice.
51.331 Notice of network changes: Timing of notice.
51.333 Notice of network changes: Short term notice.
51.335 Notice of network changes: Confidential or proprietary information.

### Subpart E—Exemptions, Suspensions, and Modifications of Requirements of Section 251 of the Act

51.401 State authority.
51.403 Carriers eligible for suspension or modification under section 251(f)(2) of the Act.
51.405 Burden of proof.

### Subpart F—Pricing of Elements

51.501 Scope.
51.503 General pricing standard.
51.505 Forward-looking economic cost.
51.507 General rate structure standard.
51.509 Rate structure standards for specific elements.
51.511 Forward-looking economic cost per unit.
51.513 Proxies for forward-looking economic cost.
51.515 Application of access charges.

### Subpart G—Resale

51.601 Scope of resale rules.
51.603 Resale obligation of all local exchange carriers.
51.605 Additional obligations of incumbent local exchange carriers.
51.607 Wholesale pricing standard.
51.609 Determination of avoided retail costs.
51.611 Interim wholesale rates.
51.613 Restrictions on resale.
51.615 Withdrawal of services.
51.617 Assessment of end user common line charge on resellers.

### Subpart H—Reciprocal Compensation for Transport and Termination of Local Telecommunications Traffic

51.701 Scope of transport and termination pricing rules.
51.703 Reciprocal compensation obligation of LECs.
51.705 Incumbent LECs' rates for transport and termination.
51.707 Default proxies for incumbent LECs' transport and termination rates.
51.709 Rate structure for transport and termination.
51.711 Symmetrical reciprocal compensation.
51.713 Bill-and-keep arrangements for reciprocal compensation.
51.715 Interim transport and termination pricing.
51.717 Renegotiation of existing non-reciprocal arrangements.

### Subpart I—Procedures for Implementation of Section 252 of the Act

51.801 Commission action upon a state commission's failure to act to carry out its responsibility under section 252 of the Act.
51.803 Procedures for Commission notification of a state commission's failure to act.
51.805 The Commission's authority over proceedings and matters.
51.807 Arbitration and mediation of agreements by the Commission pursuant to section 252(e)(5) of the Act.
51.809 Availability of provisions of agreements to other telecommunications carriers under section 252(i) of the Act.

AUTHORITY: Sections 1–5, 7, 201–05, 207–09, 218, 225–27, 251–54, 271, 332, 48 Stat. 1070, as amended, 1077; 47 U.S.C. §§ 151–55, 157, 201–05, 207–09, 218, 225–27, 251–54, 271, 332, unless otherwise noted.

SOURCE: 61 FR 45619, Aug. 29, 1996, unless otherwise noted.

## Subpart A—General Information

### § 51.1 Basis and purpose.

(a) *Basis.* These rules are issued pursuant to the Communications Act of 1934, as amended.

(b) *Purpose.* The purpose of these rules is to implement sections 251 and 252 of the Communications Act of 1934, as amended, 47 U.S.C. 251 and 252.

### § 51.3 Applicability to negotiated agreements.

To the extent provided in section 252(e)(2)(A) of the Act, a state commission shall have authority to approve an interconnection agreement adopted by negotiation even if the terms of the agreement do not comply with the requirements of this part.

### § 51.5 Terms and definitions.

Terms used in this part have the following meanings:

*Act.* The Communications Act of 1934, as amended.

*Advanced intelligent network. Advanced intelligent network* is a telecommunications network architecture in which call processing, call routing, and network management are provided by means of centralized databases located at points in an incumbent local exchange carrier's network.

*Advanced services.* The term ''advanced services'' is defined as high speed, switched, broadband, wireline telecommunications capability that enables users to originate and receive high-quality voice, data, graphics or video telecommunications using any technology.

*Arbitration, final offer. Final offer arbitration* is a procedure under which each party submits a final offer concerning the issues subject to arbitration, and the arbitrator selects, without modification, one of the final offers by the parties to the arbitration or portions of both such offers. ''Entire package final offer arbitration,'' is a procedure under which the arbitrator must select, without modification, the entire proposal submitted by one of the parties to the arbitration. ''Issue-by-issue final offer arbitration,'' is a procedure under which the arbitrator must select, without modification, on an issue-by-issue basis, one of the proposals submitted by the parties to the arbitration.

*Billing. Billing* involves the provision of appropriate usage data by one telecommunications carrier to another to facilitate customer billing with attendant acknowledgements and status reports. It also involves the exchange of information between telecommunications carriers to process claims and adjustments.

*Binder or binder group.* Copper pairs bundled together, generally in groups of 25, 50 or 100.

*Commercial Mobile Radio Service* (CMRS). *CMRS* has the same meaning as that term is defined in § 20.3 of this chapter.

*Commission. Commission* refers to the Federal Communications Commission.

*Day. Day* means calendar day.

*Dialing parity.* The term *dialing parity* means that a person that is not an affiliate of a local exchange carrier is able to provide telecommunications services in such a manner that customers have the ability to route automatically, without the use of any access code, their telecommunications to the telecommunications service provider of the customer's designation from among 2 or more telecommunications service providers (including such local exchange carrier).

*Directory assistance service. Directory assistance service* includes, but is not limited to, making available to customers, upon request, information contained in directory listings.

*Directory listings. Directory listings* are any information:

(1) Identifying the listed names of subscribers of a telecommunications carrier and such subscriber's telephone numbers, addresses, or primary advertising classifications (as such classifications are assigned at the time of the establishment of such service), or any combination of such listed names, numbers, addresses or classifications; and

(2) That the telecommunications carrier or an affiliate has published, caused to be published, or accepted for publication in any directory format.

*Downstream database.* A *downstream database* is a database owned and operated by an individual carrier for the purpose of providing number portability in conjunction with other functions and services.

*Equipment necessary for interconnection or access to unbundled network elements.* For purposes of section 251(c)(2) of the Act, the equipment used to interconnect with an incumbent local exchange carrier's network for the transmission and routing of telephone exchange service, exchange access service, or both. For the purposes of section 251(c)(3) of the Act, the equipment used to gain access to an incumbent local exchange carrier's unbundled network elements for the provision of a telecommunications service.

*Incumbent Local Exchange Carrier* (Incumbent LEC). With respect to an area, the local exchange carrier that:

(1) On February 8, 1996, provided telephone exchange service in such area; and

(2)(i) On February 8, 1996, was deemed to be a member of the exchange carrier association pursuant to § 69.601(b) of this chapter; or

(ii) Is a person or entity that, on or after February 8, 1996, became a successor or assign of a member described in paragraph (2)(i) of this section.

*Information services.* The term *information services* means the offering of a capability for generating, acquiring, storing, transforming, processing, retrieving, utilizing, or making available information via telecommunications, and includes electronic publishing, but does not include any use of any such capability for the management, control, or operation of a telecommunications system or the management of a telecommunications service.

*Interconnection. Interconnection* is the linking of two networks for the mutual exchange of traffic. This term does not include the transport and termination of traffic.

*Known disturber.* An advanced services technology that is prone to cause significant interference with other services deployed in the network.

*Local Access and Transport Area* (LATA). A *Local Access and Transport Area* is a contiguous geographic area—

(1) Established before February 8, 1996 by a Bell operating company such that no exchange area includes points within more than 1 metropolitan statistical area, consolidated metropolitan statistical area, or State, except as expressly permitted under the AT&T Consent Decree; or

(2) Established or modified by a Bell operating company after February 8, 1996 and approved by the Commission.

*Local Exchange Carrier* (LEC). A *LEC* is any person that is engaged in the provision of telephone exchange service or exchange access. Such term does not include a person insofar as such person is engaged in the provision of a commercial mobile service under section 332(c) of the Act, except to the extent that the Commission finds that such service should be included in the definition of the such term.

*Maintenance and repair. Maintenance and repair* involves the exchange of information between telecommunications carriers where one initiates a request for maintenance or repair of existing products and services or unbundled network elements or combination thereof from the other with attendant acknowledgements and status reports.

*Meet point.* A *meet point* is a point of interconnection between two networks, designated by two telecommunications carriers, at which one carrier's responsibility for service begins and the other carrier's responsibility ends.

*Meet point interconnection arrangement.* A *meet point interconnection arrangement* is an arrangement by which each telecommunications carrier builds and maintains its network to a meet point.

*Network element.* A *network element* is a facility or equipment used in the provision of a telecommunications service. Such term also includes, but is not limited to, features, functions, and capabilities that are provided by means of such facility or equipment, including but not limited to, subscriber numbers, databases, signaling systems, and information sufficient for billing and collection or used in the transmission, routing, or other provision of a telecommunications service.

*Operator services. Operator services* are any automatic or live assistance to a consumer to arrange for billing or completion of a telephone call. Such services include, but are not limited to, busy line verification, emergency interrupt, and operator-assisted directory assistance services.

*Physical collocation. Physical collocation* is an offering by an incumbent LEC that enables a requesting telecommunications carrier to:

(1) Place its own equipment to be used for interconnection or access to unbundled network elements within or upon an incumbent LEC's premises;

(2) Use such equipment to interconnect with an incumbent LEC's network facilities for the transmission and routing of telephone exchange service, exchange access service, or both, or to gain access to an incumbent LEC's unbundled network elements for the provision of a telecommunications service;

(3) Enter those premises, subject to reasonable terms and conditions, to install, maintain, and repair equipment necessary for interconnection or access to unbundled elements; and

(4) Obtain reasonable amounts of space in an incumbent LEC's premises,

as provided in this part, for the equipment necessary for interconnection or access to unbundled elements, allocated on a first-come, first-served basis.

*Premises. Premises* refers to an incumbent LEC's central offices and serving wire centers; all buildings or similar structures owned, leased, or otherwise controlled by an incumbent LEC that house its network facilities; all structures that house incumbent LEC facilities on public rights-of-way, including but not limited to vaults containing loop concentrators or similar structures; and all land owned, leased, or otherwise controlled by an incumbent LEC that is adjacent to these central offices, wire centers, buildings, and structures.

*Pre-ordering and ordering.* Pre-ordering and ordering includes the exchange of information between telecommunications carriers about: current or proposed customer products and services; or unbundled network elements, or some combination thereof. This information includes loop qualification information, such as the composition of the loop material, including but not limited to: fiber optics or copper; the existence, location and type of any electronic or other equipment on the loop, including but not limited to, digital loop carrier or other remote concentration devices, feeder/distribution interfaces, bridge taps, load coils, pair-gain devices, disturbers in the same or adjacent binder groups; the loop length, including the length and location of each type of transmission media; the wire gauge(s) of the loop; and the electrical parameters of the loop, which may determine the suitability of the loop for various technologies.

*Provisioning. Provisioning* involves the exchange of information between telecommunications carriers where one executes a request for a set of products and services or unbundled network elements or combination thereof from the other with attendant acknowledgements and status reports.

*Rural telephone company.* A *rural telephone company* is a LEC operating entity to the extent that such entity:

(1) Provides common carrier service to any local exchange carrier study area that does not include either:

(i) Any incorporated place of 10,000 inhabitants or more, or any part thereof, based on the most recently available population statistics of the Bureau of the Census; or

(ii) Any territory, incorporated or unincorporated, included in an urbanized area, as defined by the Bureau of the Census as of August 10, 1993;

(2) Provides telephone exchange service, including exchange access, to fewer than 50,000 access lines;

(3) Provides telephone exchange service to any local exchange carrier study area with fewer than 100,000 access lines; or

(4) Has less than 15 percent of its access lines in communities of more than 50,000 on February 8, 1996.

*Service control point.* A *service control point* is a computer database in the public switched network which contains information and call processing instructions needed to process and complete a telephone call.

*Service creation environment.* A *service creation environment* is a computer containing generic call processing software that can be programmed to create new advanced intelligent network call processing services.

*Service provider.* A *service provider* is a provider of telecommunications services or a provider of information services.

*Signal transfer point.* A *signal transfer point* is a packet switch that acts as a routing hub for a signaling network and transfers messages between various points in and among signaling networks.

*State.* The term *state* includes the District of Columbia and the Territories and possessions.

*State commission.* A *state commission* means the commission, board, or official (by whatever name designated) which under the laws of any State has regulatory jurisdiction with respect to intrastate operations of carriers. As referenced in this part, this term may include the Commission if it assumes the responsibility of the state commission, pursuant to section 252(e)(5) of the Act. This term shall also include any person or persons to whom the

state commission has delegated its authority under section 251 and 252 of the Act.

*State proceeding.* A *state proceeding* is any administrative proceeding in which a state commission may approve or prescribe rates, terms, and conditions including, but not limited to, compulsory arbitration pursuant to section 252(b) of the Act, review of a Bell operating company statement of generally available terms pursuant to section 252(f) of the Act, and a proceeding to determine whether to approve or reject an agreement adopted by arbitration pursuant to section 252(e) of the Act.

*Technically feasible.* Interconnection, access to unbundled network elements, collocation, and other methods of achieving interconnection or access to unbundled network elements at a point in the network shall be deemed technically feasible absent technical or operational concerns that prevent the fulfillment of a request by a telecommunications carrier for such interconnection, access, or methods. A determination of technical feasibility does not include consideration of economic, accounting, billing, space, or site concerns, except that space and site concerns may be considered in circumstances where there is no possibility of expanding the space available. The fact that an incumbent LEC must modify its facilities or equipment to respond to such request does not determine whether satisfying such request is technically feasible. An incumbent LEC that claims that it cannot satisfy such request because of adverse network reliability impacts must prove to the state commission by clear and convincing evidence that such interconnection, access, or methods would result in specific and significant adverse network reliability impacts.

*Telecommunications carrier.* A *telecommunications carrier* is any provider of telecommunications services, except that such term does not include aggregators of telecommunications services (as defined in section 226 of the Act). A telecommunications carrier shall be treated as a common carrier under the Act only to the extent that it is engaged in providing telecommunications services, except that the Commission shall determine whether the provision of fixed and mobile satellite service shall be treated as common carriage. This definition includes CMRS providers, interexchange carriers (IXCs) and, to the extent they are acting as telecommunications carriers, companies that provide both telecommunications and information services. Private Mobile Radio Service providers are telecommunications carriers to the extent they provide domestic or international telecommunications for a fee directly to the public.

*Telecommunications service.* The term *telecommunications service* refers to the offering of telecommunications for a fee directly to the public, or to such classes of users as to be effectively available directly to the public, regardless of the facilities used.

*Telephone exchange service.* A *telephone exchange service* is:

(1) A service within a telephone exchange, or within a connected system of telephone exchanges within the same exchange area operated to furnish to subscribers intercommunicating service of the character ordinarily furnished by a single exchange, and which is covered by the exchange service charge, or

(2) A comparable service provided through a system of switches, transmission equipment, or other facilities (or combination thereof) by which a subscriber can originate and terminate a telecommunications service.

*Telephone toll service.* The term *telephone toll service* refers to telephone service between stations in different exchange areas for which there is made a separate charge not included in contracts with subscribers for exchange service.

*Unreasonable dialing delay.* For the same type of calls, dialing delay is ''unreasonable'' when the dialing delay experienced by the customer of a competing provider is greater than that experienced by a customer of the LEC providing dialing parity, or nondiscriminatory access to operator services or directory assistance.

*Virtual collocation. Virtual collocation* is an offering by an incumbent LEC that enables a requesting telecommunications carrier to:

(1) Designate or specify equipment to be used for interconnection or access to unbundled network elements to be located within or upon an incumbent LEC's premises, and dedicated to such telecommunications carrier's use;

(2) Use such equipment to interconnect with an incumbent LEC's network facilities for the transmission and routing of telephone exchange service, exchange access service, or both, or for access to an incumbent LEC's unbundled network elements for the provision of a telecommunications service; and

(3) Electronically monitor and control its communications channels terminating in such equipment.

[61 FR 45619, Aug. 29, 1996, as amended at 61 FR 47348, Sept. 6, 1996; 64 FR 23241, Apr. 30, 1999; 65 FR 1344, Jan. 10, 2000; 65 FR 2550, Jan. 18, 2000; 65 FR 54438, Sept. 8, 2000]

EFFECTIVE DATE NOTE: At 65 FR 54438, Sept. 8, 2000, § 51.5 was amended by revising the definition of ''premises'' and by adding in alphabetical order a definition of ''day'', effective Oct. 10, 2000. For the convenience of the user, the superseded text is set forth as follows.

**§ 51.5 Terms and definitions.**

Terms used in this part have the following meanings:

* * * * *

*Premises. Premises* refers to an incumbent LEC's central offices and serving wire centers, as well as all buildings or similar structures owned or leased by an incumbent LEC that house its network facilities, and all structures that house incumbent LEC facilities on public rights-of-way, including but not limited to vaults containing loop concentrators or similar structures.

* * * * *

## Subpart B—Telecommunications Carriers

**§ 51.100 General duty.**

(a) Each telecommunications carrier has the duty:

(1) To interconnect directly or indirectly with the facilities and equipment of other telecommunications carriers; and

(2) To not install network features, functions, or capabilities that do not comply with the guidelines and standards as provided in the Commission's rules or section 255 or 256 of the Act.

(b) A telecommunication carrier that has interconnected or gained access under sections 251(a)(1), 251(c)(2), or 251(c)(3) of the Act, may offer information services through the same arrangement, so long as it is offering telecommunications services through the same arrangement as well.

## Subpart C—Obligations of All Local Exchange Carriers

**§ 51.201 Resale.**

The rules governing resale of services by an incumbent LEC are set forth in subpart G of this part.

**§ 51.203 Number portability.**

The rules governing number portability are set forth in part 52, subpart C of this chapter.

**§ 51.205 Dialing parity: General.**

A local exchange carrier (LEC) shall provide local and toll dialing parity to competing providers of telephone exchange service or telephone toll service, with no unreasonable dialing delays. Dialing parity shall be provided for all originating telecommunications services that require dialing to route a call.

[61 FR 47349, Sept. 6, 1996]

**§ 51.207 Local dialing parity.**

A LEC shall permit telephone exchange service customers within a local calling area to dial the same number of digits to make a local telephone call notwithstanding the identity of the customer's or the called party's telecommunications service provider.

[61 FR 47349, Sept. 6, 1996]

**§ 51.209 Toll dialing parity.**

(a) A LEC shall implement throughout each state in which it offers telephone exchange service intraLATA and interLATA toll dialing parity based on LATA boundaries. When a single LATA covers more than one state, the LEC shall use the implementation procedures that each state has approved for the LEC within that state's borders.

(b) A LEC shall implement toll dialing parity through a presubscription process that permits a customer to select a carrier to which all designated calls on a customer's line will be routed automatically. LECs shall allow a customer to presubscribe, at a minimum, to one telecommunications carrier for all interLATA toll calls and to presubscribe to the same or to another telecommunications carrier for all intraLATA toll calls.

(c) A LEC may not assign automatically a customer's intraLATA toll traffic to itself, to its subsidiaries or affiliates, to the customer's presubscribed interLATA or interstate toll carrier, or to any other carrier, except when, in a state that already has implemented intrastate, intraLATA toll dialing parity, the subscriber has selected the same presubscribed carrier for both intraLATA and interLATA toll calls.

(d) Notwithstanding the requirements of paragraphs (a) and (b) of this section, states may require that toll dialing parity be based on state boundaries if it deems that the provision of intrastate and interstate toll dialing parity is procompetitive and otherwise in the public interest.

[61 FR 47349, Sept. 6, 1996]

### § 51.211 Toll dialing parity implementation schedule.

(a) A LEC that does not begin providing in-region, interLATA or in-region, interstate toll services in a state before February 8, 1999, must implement intraLATA and interLATA toll dialing parity throughout that state on February 8, 1999 or an earlier date as the state may determine, consistent with section 271(e)(2)(B) of the Communications Act of 1934, as amended, to be in the public interest.

(b) A Bell Operating Company (BOC) that provides in-region, interLATA toll services in a state before February 8, 1999 shall provide intraLATA toll dialing parity throughout that state coincident with its provision of in-region, interLATA toll services.

(c) A LEC that is not a BOC that begins providing in-region, interLATA or in-region, interstate toll services in a state before August 8, 1997, shall implement intraLATA and interLATA toll dialing parity throughout that state by August 8, 1997. If the LEC is unable to comply with the August 8, 1997 implementation deadline, the LEC must notify the Commission's Common Carrier Bureau by May 8, 1997. In the notification, the LEC must state its justification for noncompliance and must set forth the date by which it proposes to implement intraLATA and interLATA toll dialing parity.

(d) A LEC that is not a BOC that begins providing in-region, interLATA or in-region, interstate toll services in a state on or after August 8, 1997, but before February 8, 1999 shall implement intraLATA and interLATA toll dialing parity throughout that state no later than the date on which it begins providing in-region, interLATA or in-region, interstate toll services.

(e) Notwithstanding the requirements of paragraphs (a) through (d) of this section, a LEC shall implement toll dialing parity under a state order as described below:

(1) If the state issued a dialing parity order by December 19, 1995 requiring a BOC to implement toll dialing parity in advance of the dates established by these rules, the BOC must implement toll dialing parity in accordance with the implementation dates established by the state order.

(2) If the state issued a dialing parity order by August 8, 1996 requiring a LEC that is not a BOC to implement toll dialing parity in advance of the dates established by these rules, the LEC must implement toll dialing parity in accordance with the implementation dates established by the state order.

(f) For LECs that are not Bell Operating Companies, the term *in-region, interLATA toll service*, as used in this section and § 51.213, includes the provision of toll services outside of the LEC's study area.

[61 FR 47349, Sept. 6, 1996]

### § 51.213 Toll dialing parity implementation plans.

(a) A LEC must file a plan for providing intraLATA toll dialing parity throughout each state in which it offers telephone exchange service. A LEC cannot offer intraLATA toll dialing parity within a state until the implementation plan has been approved by

the appropriate state commission or the Commission.

(b) A LEC's implementation plan must include:

(1) A proposal that explains how the LEC will offer intraLATA toll dialing parity for each exchange that the LEC operates in the state, in accordance with the provisions of this section, and a proposed time schedule for implementation; and

(2) A proposal for timely notification of its subscribers and the methods it proposes to use to enable subscribers to affirmatively select an intraLATA toll service provider.

(3) A LEC that is not a BOC also shall identify the LATA with which it will associate for the purposes of providing intraLATA and interLATA toll dialing parity under this subpart.

(c) A LEC must file its implementation plan with the state commission for each state in which the LEC provides telephone exchange service, except that if a LEC determines that a state commission has elected not to review the plan or will not complete its review in sufficient time for the LEC to meet the toll dialing parity implementation deadlines in § 51.211, the LEC must file its plan with the Commission:

(1) No later than 180 days before the date on which the LEC will begin providing toll dialing parity in the state, or no later than 180 days before February 8, 1999, whichever occurs first; or

(2) For LECs that begin providing in-region, interLATA or in-region, interstate toll service (*see* § 51.211(f)) before August 8, 1997, no later than December 5, 1996.

(d) The Commission will release a public notice of any LEC implementation plan that is filed with the Commission under paragraph (c) of this section.

(1) The LEC's plan will be deemed approved on the fifteenth day following release of the Commission's public notice unless, no later than the fourteenth day following the release of the Commission's public notice; either

(i) The Common Carrier Bureau notifies the LEC that its plan will not be deemed approved on the fifteenth day; or

(ii) An opposition to the plan is filed with the Commission and served on the LEC that filed the plan. Such an opposition must state specific reasons why the LEC's plan does not serve the public interest.

(2) If one or more oppositions are filed, the LEC that filed the plan will have seven additional days (*i.e.*, until no later than the twenty-first day following the release of the Commission's public notice) within which to file a reply to the opposition(s) and serve it on all parties that filed an opposition. The response shall:

(i) Include information responsive to the allegations and concerns identified by the opposing party; and

(ii) Identify possible revisions to the plan that will address the opposing party's concerns.

(3) If a LEC's plan is opposed under paragraph (d)(1)(ii) of this section, the Common Carrier Bureau will act on the plan within ninety days of the date on which the Commission released its public notice. In the event the Bureau fails to act within ninety days, the plan will not go into effect pending Bureau action. If the plan is not opposed, but it did not go into effect on the fifteenth day following the release of the Commission's public notice (*see* paragraph (d)(1)(i) of this section), and the Common Carrier Bureau fails to act on the plan within ninety days of the date on which the Commission released its public notice, the plan will be deemed approved without further Commission action on the ninety-first day after the date on which the Commission released its public notice of the plan's filing.

[61 FR 47349, Sept. 6, 1996]

### § 51.215 Dialing parity: Cost recovery.

(a) A LEC may recover the incremental costs necessary for the implementation of toll dialing parity. The LEC must recover such costs from all providers of telephone exchange service and telephone toll service in the area served by the LEC, including that LEC. The LEC shall use a cost recovery mechanism established by the state.

(b) Any cost recovery mechanism for the provision of toll dialing parity pursuant to this section that a state adopts must not:

(1) Give one service provider an appreciable cost advantage over another service provider, when competing for a

specific subscriber (*i.e.*, the recovery mechanism may not have a disparate effect on the incremental costs of competing service providers seeking to serve the same customer); or

(2) Have a disparate effect on the ability of competing service providers to earn a normal return on their investment.

[61 FR 47350, Sept. 6, 1996]

**§51.217 Nondiscriminatory access: Telephone numbers, operator services, directory assistance services, and directory listings.**

(a) *Definitions.* As used in this section, the following definitions apply:

(1) *Competing provider.* A ''competing provider'' is a provider of telephone exchange or telephone toll services that seeks nondiscriminatory access from a local exchange carrier (LEC) in that LEC's service area.

(2) *Nondiscriminatory access.* ''Nondiscriminatory access'' refers to access to telephone numbers, operator services, directory assistance and directory listings that is at least equal to the access that the providing local exchange carrier (LEC) itself receives. Nondiscriminatory access includes, but is not limited to:

(i) Nondiscrimination between and among carriers in the rates, terms, and conditions of the access provided; and

(ii) The ability of the competing provider to obtain access that is at least equal in quality to that of the providing LEC.

(3) *Providing local exchange carrier* (LEC). A ''providing local exchange carrier'' is a local exchange carrier (LEC) that is required to permit nondiscriminatory access to a competing provider.

(b) *General rule.* A local exchange carrier (LEC) that provides operator services, directory assistance services or directory listings to its customers, or provides telephone numbers, shall permit competing providers of telephone exchange service or telephone toll service to have nondiscriminatory access to that service or feature, with no unreasonable dialing delays.

(c) *Specific requirements.* A LEC subject to paragraph (b) of this section must also comply with the following requirements:

(1) *Telephone numbers.* A LEC shall permit competing providers to have access to telephone numbers that is identical to the access that the LEC provides to itself.

(2) *Operator services.* A LEC must permit telephone service customers to connect to the operator services offered by that customer's chosen local service provider by dialing ''0,'' or ''0'' plus the desired telephone number, regardless of the identity of the customer's local telephone service provider.

(3) *Directory assistance services and directory listings*—(i) *Access to directory assistance.* A LEC shall permit competing providers to have access to its directory assistance services, including directory assistance databases, so that any customer of a competing provider can obtain directory listings, except as provided in paragraph (c)(3)(iv) of this section, on a nondiscriminatory basis, notwithstanding the identity of the customer's local service provider, or the identity of the provider for the customer whose listing is requested. A LEC must supply access to directory assistance in the manner specified by the competing provider, including transfer of the LECs' directory assistance databases in readily accessible magnetic tape, electronic or other convenient format, as provided in paragraph (c)(3)(iii) of this section. Updates to the directory assistance database shall be made in the same format as the initial transfer (unless the requesting LEC requests otherwise), and shall be performed in a timely manner, taking no longer than those made to the providing LEC's own database. A LEC shall accept the listings of those customers served by competing providers for inclusion in its directory assistance/operator services databases.

(ii) *Access to directory listings.* A LEC that compiles directory listings shall share directory listings with competing providers in the manner specified by the competing provider, including readily accessible tape or electronic formats, as provided in paragraph (c)(3)(iii) of this section. Such data shall be provided in a timely fashion.

(iii) *Format.* A LEC shall provide access to its directory assistance services, including directory assistance

databases, and to its directory listings in any format the competing provider specifies, if the LEC's internal systems can accommodate that format.

(A) If a LEC's internal systems do not permit it provide directory assistance or directory listings in the format the specified by the competing provider, the LEC shall:

(*1*) Within thirty days of receiving the request, inform the competing provider that the requested format cannot be accommodated and tell the requesting provider which formats can be accommodated; and

(*2*) Provide the requested directory assistance or directory listings in the format the competing provider chooses from among the available formats.

(B) [Reserved]

(iv) *Unlisted numbers.* A LEC shall not provide access to unlisted telephone numbers, or other information that its customer has asked the LEC not to make available, with the exception of customer name and address. The LEC shall ensure that access is permitted to the same directory information, including customer name and address, that is available to its own directory assistance customers.

(v) *Adjuncts to services.* Operator services and directory assistance services must be made available to competing providers in their entirety, including access to any adjunct features (*e.g.*, rating tables or customer information databases) necessary to allow competing providers full use of these services.

(d) *Branding of operator services and directory assistance services.* The refusal of a providing local exchange carrier (LEC) to comply with the reasonable request of a competing provider that the providing LEC rebrand its operator services and directory assistance, or remove its brand from such services, creates a presumption that the providing LEC is unlawfully restricting access to its operator services and directory assistance. The providing LEC can rebut this presumption by demonstrating that it lacks the capability to comply with the competing provider's request.

(e) *Disputes*—(1) *Disputes involving nondiscriminatory access.* In disputes involving nondiscriminatory access to operator services, directory assistance services, or directory listings, a providing LEC shall bear the burden of demonstrating with specificity:

(i) That it is permitting nondiscriminatory access, and

(ii) That any disparity in access is not caused by factors within its control. ''Factors within its control'' include, but are not limited to, physical facilities, staffing, the ordering of supplies or equipment, and maintenance.

(2) *Disputes involving unreasonable dialing delay.* In disputes between providing local exchange carriers (LECs) and competing providers involving unreasonable dialing delay in the provision of access to operator services and directory assistance, the burden of proof is on the providing LEC to demonstrate with specificity that it is processing the calls of the competing provider's customers on terms equal to that of similar calls from the providing LEC's own customers.

[61 FR 47350, Sept. 6, 1996, as amended at 64 FR 51911, Sept. 27, 1999]

EFFECTIVE DATE NOTE: At 64 FR 51911, Sept. 27, 1999, § 51.217 was amended by revising paragraph (c)(3). This paragraph contains information collection and recordkeeping requirements and will not become effective until approval has been given by the Office of Management and Budget.

### § 51.219 Access to rights of way.

The rules governing access to rights of way are set forth in part 1, subpart J of this chapter.

### § 51.221 Reciprocal compensation.

The rules governing reciprocal compensation are set forth in subpart H of this part.

### § 51.223 Application of additional requirements.

(a) A state may not impose the obligations set forth in section 251(c) of the Act on a LEC that is not classified as an incumbent LEC as defined in section 251(h)(1) of the Act, unless the Commission issues an order declaring that such LECs or classes or categories of LECs should be treated as incumbent LECs.

(b) A state commission, or any other interested party, may request that the Commission issue an order declaring that a particular LEC be treated as an

incumbent LEC, or that a class or category of LECs be treated as incumbent LECs, pursuant to section 251(h)(2) of the Act.

### § 51.230 Presumption of acceptability for deployment of an advanced services loop technology.

(a) An advanced services loop technology is presumed acceptable for deployment under any one of the following circumstances, where the technology:

(1) Complies with existing industry standards; or

(2) Is approved by an industry standards body, the Commission, or any state commission; or

(3) Has been successfully deployed by any carrier without significantly degrading the performance of other services.

(b) An incumbent LEC may not deny a carrier's request to deploy a technology that is presumed acceptable for deployment unless the incumbent LEC demonstrates to the relevant state commission that deployment of the particular technology will significantly degrade the performance of other advanced services or traditional voiceband services.

(c) Where a carrier seeks to establish that deployment of a technology falls within the presumption of acceptability under paragraph (a)(3) of this section, the burden is on the requesting carrier to demonstrate to the state commission that its proposed deployment meets the threshold for a presumption of acceptability and will not, in fact, significantly degrade the performance of other advanced services or traditional voice band services. Upon a successful demonstration by the requesting carrier before a particular state commission, the deployed technology shall be presumed acceptable for deployment in other areas.

[65 FR 1345, Jan. 10, 2000]

### § 51.231 Provision of information on advanced services deployment.

(a) An incumbent LEC must provide to requesting carriers that seek access to a loop or high frequency portion of the loop to provide advanced services:

(1) Uses in determining which services can be deployed; and information with respect to the spectrum management procedures and policies that the incumbent LEC.

(2) Information with respect to the rejection of the requesting carrier's provision of advanced services, together with the specific reason for the rejection; and

(3) Information with respect to the number of loops using advanced services technology within the binder and type of technology deployed on those loops.

(b) A requesting carrier that seeks access to a loop or a high frequency portion of a loop to provide advanced services must provide to the incumbent LEC information on the type of technology that the requesting carrier seeks to deploy.

(1) Where the requesting carrier asserts that the technology it seeks to deploy fits within a generic power spectral density (PSD) mask, it also must provide Spectrum Class information for the technology.

(2) Where a requesting carrier relies on a calculation-based approach to support deployment of a particular technology, it must provide the incumbent LEC with information on the speed and power at which the signal will be transmitted.

(c) The requesting carrier also must provide the information required under paragraph (b) of this section when notifying the incumbent LEC of any proposed change in advanced services technology that the carrier uses on the loop.

[65 FR 1345, Jan. 10, 2000]

### § 51.232 Binder group management.

(a) With the exception of loops on which a known disturber is deployed, the incumbent LEC shall be prohibited from designating, segregating or reserving particular loops or binder groups for use solely by any particular advanced services loop technology.

(b) Any party seeking designation of a technology as a known disturber should file a petition for declaratory ruling with the Commission seeking such designation, pursuant to §1.2 of this chapter.

[65 FR 1346, Jan. 10, 2000]

### § 51.233 Significant degradation of services caused by deployment of advanced services.

(a) Where a carrier claims that a deployed advanced service is significantly degrading the performance of other advanced services or traditional voiceband services, that carrier must notify the deploying carrier and allow the deploying carrier a reasonable opportunity to correct the problem. Where the carrier whose services are being degraded does not know the precise cause of the degradation, it must notify each carrier that may have caused or contributed to the degradation.

(b) Where the degradation asserted under paragraph (a) of this section remains unresolved by the deploying carrier(s) after a reasonable opportunity to correct the problem, the carrier whose services are being degraded must establish before the relevant state commission that a particular technology deployment is causing the significant degradation.

(c) Any claims of network harm presented to the deploying carrier(s) or, if subsequently necessary, the relevant state commission, must be supported with specific and verifiable information.

(d) Where a carrier demonstrates that a deployed technology is significantly degrading the performance of other advanced services or traditional voice band services, the carrier deploying the technology shall discontinue deployment of that technology and migrate its customers to technologies that will not significantly degrade the performance of other such services.

(e) Where the only degraded service itself is a known disturber, and the newly deployed technology satisfies at least one of the criteria for a presumption that it is acceptable for deployment under § 51.230, the degraded service shall not prevail against the newly-deployed technology.

[65 FR 1346, Jan. 10, 2000]

## Subpart D—Additional Obligations of Incumbent Local Exchange Carriers

### § 51.301 Duty to negotiate.

(a) An incumbent LEC shall negotiate in good faith the terms and conditions of agreements to fulfill the duties established by sections 251 (b) and (c) of the Act.

(b) A requesting telecommunications carrier shall negotiate in good faith the terms and conditions of agreements described in paragraph (a) of this section.

(c) If proven to the Commission, an appropriate state commission, or a court of competent jurisdiction, the following actions or practices, among others, violate the duty to negotiate in good faith:

(1) Demanding that another party sign a nondisclosure agreement that precludes such party from providing information requested by the Commission, or a state commission, or in support of a request for arbitration under section 252(b)(2)(B) of the Act;

(2) Demanding that a requesting telecommunications carrier attest that an agreement complies with all provisions of the Act, federal regulations, or state law;

(3) Refusing to include in an arbitrated or negotiated agreement a provision that permits the agreement to be amended in the future to take into account changes in Commission or state rules;

(4) Conditioning negotiation on a requesting telecommunications carrier first obtaining state certifications;

(5) Intentionally misleading or coercing another party into reaching an agreement that it would not otherwise have made;

(6) Intentionally obstructing or delaying negotiations or resolutions of disputes;

(7) Refusing throughout the negotiation process to designate a representative with authority to make binding representations, if such refusal significantly delays resolution of issues; and

(8) Refusing to provide information necessary to reach agreement. Such refusal includes, but is not limited to:

(i) Refusal by an incumbent LEC to furnish information about its network that a requesting telecommunications carrier reasonably requires to identify the network elements that it needs in order to serve a particular customer; and

(ii) Refusal by a requesting telecommunications carrier to furnish cost data that would be relevant to setting rates if the parties were in arbitration.

**§ 51.303 Preexisting agreements.**

(a) All interconnection agreements between an incumbent LEC and a telecommunications carrier, including those negotiated before February 8, 1996, shall be submitted by the parties to the appropriate state commission for approval pursuant to section 252(e) of the Act.

(b) Interconnection agreements negotiated before February 8, 1996, between Class A carriers, as defined by § 32.11(a)(1) of this chapter, shall be filed by the parties with the appropriate state commission no later than June 30, 1997, or such earlier date as the state commission may require.

(c) If a state commission approves a preexisting agreement, it shall be made available to other parties in accordance with section 252(i) of the Act and § 51.809 of this part. A state commission may reject a preexisting agreement on the grounds that it is inconsistent with the public interest, or for other reasons set forth in section 252(e)(2)(A) of the Act.

**§ 51.305 Interconnection.**

(a) An incumbent LEC shall provide, for the facilities and equipment of any requesting telecommunications carrier, interconnection with the incumbent LEC's network:

(1) For the transmission and routing of telephone exchange traffic, exchange access traffic, or both;

(2) At any technically feasible point within the incumbent LEC's network including, at a minimum:

(i) The line-side of a local switch;

(ii) The trunk-side of a local switch;

(iii) The trunk interconnection points for a tandem switch;

(iv) Central office cross-connect points;

(v) Out-of-band signaling transfer points necessary to exchange traffic at these points and access call-related databases; and

(vi) The points of access to unbundled network elements as described in § 51.319;

(3) That is at a level of quality that is equal to that which the incumbent LEC provides itself, a subsidiary, an affiliate, or any other party, except as provided in paragraph (4) of this section. At a minimum, this requires an incumbent LEC to design interconnection facilities to meet the same technical criteria and service standards that are used within the incumbent LEC's network. This obligation is not limited to a consideration of service quality as perceived by end users, and includes, but is not limited to, service quality as perceived by the requesting telecommunications carrier;

(4) That, if so requested by a telecommunications carrier and to the extent technically feasible, is superior in quality to that provided by the incumbent LEC to itself or to any subsidiary, affiliate, or any other party to which the incumbent LEC provides interconnection. Nothing in this section prohibits an incumbent LEC from providing interconnection that is lesser in quality at the sole request of the requesting telecommunications carrier; and

(5) On terms and conditions that are just, reasonable, and nondiscriminatory in accordance with the terms and conditions of any agreement, the requirements of sections 251 and 252 of the Act, and the Commission's rules including, but not limited to, offering such terms and conditions equally to all requesting telecommunications carriers, and offering such terms and conditions that are no less favorable than the terms and conditions upon which the incumbent LEC provides such interconnection to itself. This includes, but is not limited to, the time within which the incumbent LEC provides such interconnection.

(b) A carrier that requests interconnection solely for the purpose of originating or terminating its interexchange traffic on an incumbent

LEC's network and not for the purpose of providing to others telephone exchange service, exchange access service, or both, is not entitled to receive interconnection pursuant to section 251(c)(2) of the Act.

(c) Previous successful interconnection at a particular point in a network, using particular facilities, constitutes substantial evidence that interconnection is technically feasible at that point, or at substantially similar points, in networks employing substantially similar facilities. Adherence to the same interface or protocol standards shall constitute evidence of the substantial similarity of network facilities.

(d) Previous successful interconnection at a particular point in a network at a particular level of quality constitutes substantial evidence that interconnection is technically feasible at that point, or at substantially similar points, at that level of quality.

(e) An incumbent LEC that denies a request for interconnection at a particular point must prove to the state commission that interconnection at that point is not technically feasible.

(f) If technically feasible, an incumbent LEC shall provide two-way trunking upon request.

(g) An incumbent LEC shall provide to a requesting telecommunications carrier technical information about the incumbent LEC's network facilities sufficient to allow the requesting carrier to achieve interconnection consistent with the requirements of this section.

[61 FR 45619, Aug. 29, 1996, as amended at 61 FR 47351, Sept. 6, 1996]

### § 51.307 Duty to provide access on an unbundled basis to network elements.

(a) An incumbent LEC shall provide, to a requesting telecommunications carrier for the provision of a telecommunications service, nondiscriminatory access to network elements on an unbundled basis at any technically feasible point on terms and conditions that are just, reasonable, and nondiscriminatory in accordance with the terms and conditions of any agreement, the requirements of sections 251 and 252 of the Act, and the Commission's rules.

(b) The duty to provide access to unbundled network elements pursuant to section 251(c)(3) of the Act includes a duty to provide a connection to an unbundled network element independent of any duty to provide interconnection pursuant to this part and section 251(c)(2) of the Act.

(c) An incumbent LEC shall provide a requesting telecommunications carrier access to an unbundled network element, along with all of the unbundled network element's features, functions, and capabilities, in a manner that allows the requesting telecommunications carrier to provide any telecommunications service that can be offered by means of that network element.

(d) An incumbent LEC shall provide a requesting telecommunications carrier access to the facility or functionality of a requested network element separate from access to the facility or functionality of other network elements, for a separate charge.

(e) An incumbent LEC shall provide to a requesting telecommunications carrier technical information about the incumbent LEC's network facilities sufficient to allow the requesting carrier to achieve access to unbundled network elements consistent with the requirements of this section.

[61 FR 45619, Aug. 29, 1996, as amended at 61 FR 47351, Sept. 6, 1996]

### § 51.309 Use of unbundled network elements.

(a) An incumbent LEC shall not impose limitations, restrictions, or requirements on requests for, or the use of, unbundled network elements that would impair the ability of a requesting telecommunications carrier to offer a telecommunications service in the manner the requesting telecommunications carrier intends.

(b) A telecommunications carrier purchasing access to an unbundled network element may use such network element to provide exchange access services to itself in order to provide interexchange services to subscribers.

(c) A telecommunications carrier purchasing access to an unbundled network facility is entitled to exclusive

use of that facility for a period of time, or when purchasing access to a feature, function, or capability of a facility, a telecommunications carrier is entitled to use of that feature, function, or capability for a period of time. A telecommunications carrier's purchase of access to an unbundled network element does not relieve the incumbent LEC of the duty to maintain, repair, or replace the unbundled network element.

**§ 51.311 Nondiscriminatory access to unbundled network elements.**

(a) The quality of an unbundled network element, as well as the quality of the access to the unbundled network element, that an incumbent LEC provides to a requesting telecommunications carrier shall be the same for all telecommunications carriers requesting access to that network element, except as provided in paragraph (c) of this section.

(b) Except as provided in paragraph (c) of this section, to the extent technically feasible, the quality of an unbundled network element, as well as the quality of the access to such unbundled network element, that an incumbent LEC provides to a requesting telecommunications carrier shall be at least equal in quality to that which the incumbent LEC provides to itself. If an incumbent LEC fails to meet this requirement, the incumbent LEC must prove to the state commission that it is not technically feasible to provide the requested unbundled network element, or to provide access to the requested unbundled network element, at a level of quality that is equal to that which the incumbent LEC provides to itself.

(c) To the extent technically feasible, the quality of an unbundled network element, as well as the quality of the access to such unbundled network element, that an incumbent LEC provides to a requesting telecommunications carrier shall, upon request, be superior in quality to that which the incumbent LEC provides to itself. If an incumbent LEC fails to meet this requirement, the incumbent LEC must prove to the state commission that it is not technically feasible to provide the requested unbundled network element or access to such unbundled network element at the requested level of quality that is superior to that which the incumbent LEC provides to itself. Nothing in this section prohibits an incumbent LEC from providing interconnection that is lesser in quality at the sole request of the requesting telecommunications carrier.

(d) Previous successful access to an unbundled element at a particular point in a network, using particular facilities, is substantial evidence that access is technically feasible at that point, or at substantially similar points, in networks employing substantially similar facilities. Adherence to the same interface or protocol standards shall constitute evidence of the substantial similarity of network facilities.

(e) Previous successful provision of access to an unbundled element at a particular point in a network at a particular level of quality is substantial evidence that access is technically feasible at that point, or at substantially similar points, at that level of quality.

**§ 51.313 Just, reasonable and nondiscriminatory terms and conditions for the provision of unbundled network elements.**

(a) The terms and conditions pursuant to which an incumbent LEC provides access to unbundled network elements shall be offered equally to all requesting telecommunications carriers.

(b) Where applicable, the terms and conditions pursuant to which an incumbent LEC offers to provide access to unbundled network elements, including but not limited to, the time within which the incumbent LEC provisions such access to unbundled network elements, shall, at a minimum, be no less favorable to the requesting carrier than the terms and conditions under which the incumbent LEC provides such elements to itself.

(c) An incumbent LEC must provide a carrier purchasing access to unbundled network elements with the pre-ordering, ordering, provisioning, maintenance and repair, and billing functions of the incumbent LEC's operations support systems.

**§ 51.315 Combination of unbundled network elements.**

(a) An incumbent LEC shall provide unbundled network elements in a manner that allows requesting telecommunications carriers to combine such network elements in order to provide a telecommunications service.

(b) Except upon request, an incumbent LEC shall not separate requested network elements that the incumbent LEC currently combines.

(c) Upon request, an incumbent LEC shall perform the functions necessary to combine unbundled network elements in any manner, even if those elements are not ordinarily combined in the incumbent LEC's network, provided that such combination is:

(1) Technically feasible; and

(2) Would not impair the ability of other carriers to obtain access to unbundled network elements or to interconnect with the incumbent LEC's network.

(d) Upon request, an incumbent LEC shall perform the functions necessary to combine unbundled network elements with elements possessed by the requesting telecommunications carrier in any technically feasible manner.

(e) An incumbent LEC that denies a request to combine elements pursuant to paragraph (c)(1) or paragraph (d) of this section must prove to the state commission that the requested combination is not technically feasible.

(f) An incumbent LEC that denies a request to combine elements pursuant to paragraph (c)(2) of this section must prove to the state commission that the requested combination would impair the ability of other carriers to obtain access to unbundled network elements or to interconnect with the incumbent LEC's network.

**§ 51.317 Standards for requiring the unbundling of network elements.**

(a) *Proprietary network elements.* A network element shall be considered to be proprietary if an incumbent LEC can demonstrate that it has invested resources to develop proprietary information or functionalities that are protected by patent, copyright or trade secret law. The Commission shall undertake the following analysis to determine whether a proprietary network element should be made available for purposes of section 251(c)(3) of the Act:

(1) Determine whether access to the proprietary network element is ''necessary.'' A network element is ''necessary'' if, taking into consideration the availability of alternative elements outside the incumbent LEC's network, including self-provisioning by a requesting carrier or acquiring an alternative from a third-party supplier, lack of access to the network element precludes a requesting telecommunications carrier from providing the services that it seeks to offer. If access is ''necessary,'' then, subject to any consideration of the factors set forth under paragraph (c) of this section, the Commission may require the unbundling of such proprietary network element.

(2) In the event that such access is not ''necessary,'' the Commission may require unbundling subject to any consideration of the factors set forth under paragraph (c) of this section if it is determined that:

(i) The incumbent LEC has implemented only a minor modification to the network element in order to qualify for proprietary treatment;

(ii) The information or functionality that is proprietary in nature does not differentiate the incumbent LEC's services from the requesting carrier's services; or

(iii) Lack of access to such element would jeopardize the goals of the 1996 Act.

(b) *Non-proprietary network elements.* The Commission shall undertake the following analysis to determine whether a non-proprietary network element should be made available for purposes of section 251(c)(3) of the Act:

(1) Determine whether lack of access to a non-proprietary network element ''impairs'' a carrier's ability to provide the service it seeks to offer. A requesting carrier's ability to provide service is ''impaired'' if, taking into consideration the availability of alternative elements outside the incumbent LEC's network, including self-provisioning by a requesting carrier or acquiring an alternative from a third-party supplier, lack of access to that element materially diminishes a requesting carrier's ability to provide the services it seeks

to offer. The Commission will consider the totality of the circumstances to determine whether an alternative to the incumbent LEC's network element is available in such a manner that a requesting carrier can provide service using the alternative. If the Commission determines that lack of access to an element ''impairs'' a requesting carrier's ability to provide service, it may require the unbundling of that element, subject to any consideration of the factors set forth under section 51.317(c).

(2) In considering whether lack of access to a network element materially diminishes a requesting carrier's ability to provide service, the Commission shall consider the extent to which alternatives in the market are available as a practical, economic, and operational matter. The Commission will rely upon the following factors to determine whether alternative network elements are available as a practical, economic, and operational matter:

(i) Cost, including all costs that requesting carriers may incur when using the alternative element to provide the services it seeks to offer;

(ii) Timeliness, including the time associated with entering a market as well as the time to expand service to more customers;

(iii) Quality;

(iv) Ubiquity, including whether the alternatives are available ubiquitously;

(v) Impact on network operations.

(3) In determining whether to require the unbundling of any network element under this rule, the Commission may also consider the following additional factors:

(i) Whether unbundling of a network element promotes the rapid introduction of competition;

(ii) Whether unbundling of a network element promotes facilities-based competition, investment, and innovation;

(iii) Whether unbundling of a network element promotes reduced regulation;

(iv) Whether unbundling of a network element provides certainty to requesting carriers regarding the availability of the element;

(v) Whether unbundling of a network element is administratively practical to apply.

(4) If an incumbent LEC is required to provide nondiscriminatory access to a network element in accordance with §51.311 and section 251(c)(3) of the Act under §51.319 of this section or any applicable Commission Order, no state commission shall have authority to determine that such access is not required. A state commission must comply with the standards set forth in this §51.317 when considering whether to require the unbundling of additional network elements. With respect to any network element which a state commission has required to be unbundled under this §51.317, the state commission retains the authority to subsequently determine, in accordance with the requirements of this rule, that such network element need no longer be unbundled.

[65 FR 2551, Jan. 18, 2000]

### §51.319 Specific unbundling requirements.

(a) *Local loop and subloop.* An incumbent LEC shall provide nondiscriminatory access, in accordance with §51.311 and section 251(c)(3) of the Act, to the local loop and subloop, including inside wiring owned by the incumbent LEC, on an unbundled basis to any requesting telecommunications carrier for the provision of a telecommunications service.

(1) *Local loop.* The local loop network element is defined as a transmission facility between a distribution frame (or its equivalent) in an incumbent LEC central office and the loop demarcation point at an end-user customer premises, including inside wire owned by the incumbent LEC. The local loop network element includes all features, functions, and capabilities of such transmission facility. Those features, functions, and capabilities include, but are not limited to, dark fiber, attached electronics (except those electronics used for the provision of advanced services, such as Digital Subscriber Line Access Multiplexers), and line conditioning. The local loop includes, but is not limited to, DS1, DS3, fiber, and other high capacity loops. The requirements in this section relating to dark fiber are not effective until May 17, 2000.

(2) *Subloop.* The subloop network element is defined as any portion of the loop that is technically feasible to access at terminals in the incumbent LEC's outside plant, including inside wire. An accessible terminal is any point on the loop where technicians can access the wire or fiber within the cable without removing a splice case to reach the wire or fiber within. Such points may include, but are not limited to, the pole or pedestal, the network interface device, the minimum point of entry, the single point of interconnection, the main distribution frame, the remote terminal, and the feeder/distribution interface. The requirements in this section relating to subloops and inside wire are not effective until May 17, 2000.

(i) *Inside wire.* Inside wire is defined as all loop plant owned by the incumbent LEC on end-user customer premises as far as the point of demarcation as defined in § 68.3 of this chapter, including the loop plant near the end-user customer premises. Carriers may access the inside wire subloop at any technically feasible point including, but not limited to, the network interface device, the minimum point of entry, the single point of interconnection, the pedestal, or the pole.

(ii) *Technical feasibility.* If parties are unable to reach agreement, pursuant to voluntary negotiations, as to whether it is technically feasible, or whether sufficient space is available, to unbundle the subloop at the point where a carrier requests, the incumbent LEC shall have the burden of demonstrating to the state, pursuant to state arbitration proceedings under section 252 of the Act, that there is not sufficient space available, or that it is not technically feasible, to unbundle the subloop at the point requested.

(iii) *Best practices.* Once one state has determined that it is technically feasible to unbundle subloops at a designated point, an incumbent LEC in any state shall have the burden of demonstrating, pursuant to state arbitration proceedings under section 252 of the Act, that it is not technically feasible, or that sufficient space is not available, to unbundle its own loops at such a point.

(iv) *Rules for collocation.* Access to the subloop is subject to the Commission's collocation rules at §§ 51.321 through 51.323.

(v) *Single point of interconnection.* The incumbent LEC shall provide a single point of interconnection at multi-unit premises that is suitable for use by multiple carriers. This obligation is in addition to the incumbent LEC's obligation to provide nondiscriminatory access to subloops at any technically feasible point. If parties are unable to negotiate terms and conditions regarding a single point of interconnection, issues in dispute, including compensation of the incumbent LEC under forward-looking pricing principles, shall be resolved under the dispute resolution processes in section 252 of the Act.

(3) *Line conditioning.* The incumbent LEC shall condition lines required to be unbundled under this section wherever a competitor requests, whether or not the incumbent LEC offers advanced services to the end-user customer on that loop.

(i) Line conditioning is defined as the removal from the loop of any devices that may diminish the capability of the loop to deliver high-speed switched wireline telecommunications capability, including xDSL service. Such devices include, but are not limited to, bridge taps, low pass filters, and range extenders.

(ii) Incumbent LECs shall recover the cost of line conditioning from the requesting telecommunications carrier in accordance with the Commission's forward-looking pricing principles promulgated pursuant to section 252(d)(1) of the Act.

(iii) Incumbent LECs shall recover the cost of line conditioning from the requesting telecommunications carrier in compliance with rules governing nonrecurring costs in § 51.507 (e).

(iv) In so far as it is technically feasible, the incumbent LEC shall test and report trouble for all the features, functions, and capabilities of conditioned lines, and may not restrict testing to voice-transmission only.

(b) *Network interface device.* An incumbent LEC shall provide nondiscriminatory access, in accordance with § 51.311 and section 251(c)(3) of the Act, to the network interface device on

an unbundled basis to any requesting telecommunications carrier for the provision of a telecommunications service. The network interface device network element is defined as any means of interconnection of end-user customer premises wiring to the incumbent LEC's distribution plant, such as a cross connect device used for that purpose. An incumbent LEC shall permit a requesting telecommunications carrier to connect its own loop facilities to on-premises wiring through the incumbent LEC's network interface device, or at any other technically feasible point.

(c) *Switching capability*. An incumbent LEC shall provide nondiscriminatory access, in accordance with §51.311 and section 251(c)(3) of the Act, to local circuit switching capability and local tandem switching capability on an unbundled basis, except as set forth in §51.319(c)(2), to any requesting telecommunications carrier for the provision of a telecommunications service. An incumbent LEC shall be required to provide nondiscriminatory access in accordance with §51.311 and section 251(c)(3) of the Act to packet switching capability on an unbundled basis to any requesting telecommunications carrier for the provision of a telecommunications service only in the limited circumstance described in §51.319(c)(4).

(1) *Local circuit switching capability, including tandem switching capability*. The local circuit switching capability network element is defined as:

(i) Line-side facilities, which include, but are not limited to, the connection between a loop termination at a main distribution frame and a switch line card;

(ii) Trunk-side facilities, which include, but are not limited to, the connection between trunk termination at a trunk-side cross-connect panel and a switch trunk card; and

(iii) All features, functions and capabilities of the switch, which include, but are not limited to:

(A) The basic switching function of connecting lines to lines, lines to trunks, trunks to lines, and trunks to trunks, as well as the same basic capabilities made available to the incumbent LEC's customers, such as a telephone number, white page listing and dial tone, and

(B) All other features that the switch is capable of providing, including but not limited to, customer calling, customer local area signaling service features, and Centrex, as well as any technically feasible customized routing functions provided by the switch.

(2) Notwithstanding the incumbent LEC's general duty to unbundle local circuit switching, an incumbent LEC shall not be required to unbundle local circuit switching for requesting telecommunications carriers when the requesting telecommunications carrier serves end-users with four or more voice grade (DS0) equivalents or lines, provided that the incumbent LEC provides nondiscriminatory access to combinations of unbundled loops and transport (also known as the ''Enhanced Extended Link'') throughout Density Zone 1, and the incumbent LEC's local circuit switches are located in:

(i) The top 50 Metropolitan Statistical Areas as set forth in Appendix B of the Third Report and Order and Fourth Further Notice of Proposed Rulemaking in CC Docket No. 96–98, and

(ii) In Density Zone 1, as defined in §69.123 of this chapter on January 1, 1999.

(3) *Local tandem switching capability*. The tandem switching capability network element is defined as:

(i) Trunk-connect facilities, which include, but are not limited to, the connection between trunk termination at a cross connect panel and switch trunk card;

(ii) The basic switch trunk function of connecting trunks to trunks; and

(iii) The functions that are centralized in tandem switches (as distinguished from separate end office switches), including but not limited, to call recording, the routing of calls to operator services, and signaling conversion features.

(4) *Packet switching capability*. (i) The packet switching capability network element is defined as the basic packet switching function of routing or forwarding packets, frames, cells or other data units based on address or other routing information contained in the packets, frames, cells or other data

units, and the functions that are performed by Digital Subscriber Line Access Multiplexers, including but not limited to:

(ii) The ability to terminate copper customer loops (which includes both a low band voice channel and a high-band data channel, or solely a data channel);

(iii) The ability to forward the voice channels, if present, to a circuit switch or multiple circuit switches;

(iv) The ability to extract data units from the data channels on the loops, and

(v) The ability to combine data units from multiple loops onto one or more trunks connecting to a packet switch or packet switches.

(5) An incumbent LEC shall be required to provide nondiscriminatory access to unbundled packet switching capability only where each of the following conditions are satisfied. The requirements in this section relating to packet switching are not effective until May 17, 2000.

(i) The incumbent LEC has deployed digital loop carrier systems, including but not limited to, integrated digital loop carrier or universal digital loop carrier systems; or has deployed any other system in which fiber optic facilities replace copper facilities in the distribution section (*e.g.*, end office to remote terminal, pedestal or environmentally controlled vault);

(ii) There are no spare copper loops capable of supporting xDSL services the requesting carrier seeks to offer;

(iii) The incumbent LEC has not permitted a requesting carrier to deploy a Digital Subscriber Line Access mulltiplexer in the remote terminal, pedestal or environmentally controlled vault or other interconnection point, nor has the requesting carrier obtained a virtual collocation arrangement at these subloop interconnection points as defined by paragraph (b) of this section; and

(iv) The incumbent LEC has deployed packet switching capability for its own use.

(d) *Interoffice transmission facilities.* An incumbent LEC shall provide nondiscriminatory access, in accordance with § 51.311 and section 251(c)(3) of the Act, to interoffice transmission facilities on an unbundled basis to any requesting telecommunications carrier for the provision of a telecommunications service. The requirements in this section relating to dark fiber transport are not effective until May 17, 2000.

(1) Interoffice transmission facility network elements include:

(i) Dedicated transport, defined as incumbent LEC transmission facilities, including all technically feasible capacity-related services including, but not limited to, DS1, DS3 and OCn levels, dedicated to a particular customer or carrier, that provide telecommunications between wire centers owned by incumbent LECs or requesting telecommunications carriers, or between switches owned by incumbent LECs or requesting telecommunications carriers;

(ii) Dark fiber transport, defined as incumbent LEC optical transmission facilities without attached multiplexing, aggregation or other electronics;

(iii) Shared transport, defined as transmission facilities shared by more than one carrier, including the incumbent LEC, between end office switches, between end office switches and tandem switches, and between tandem switches, in the incumbent LEC network.

(2) The incumbent LEC shall:

(i) Provide a requesting telecommunications carrier exclusive use of interoffice transmission facilities dedicated to a particular customer or carrier, or use the features, functions, and capabilities of interoffice transmission facilities shared by more than one customer or carrier.

(ii) Provide all technically feasible transmission facilities, features, functions, and capabilities that the requesting telecommunications carrier could use to provide telecommunications services;

(iii) Permit, to the extent technically feasible, a requesting telecommunications carrier to connect such interoffice facilities to equipment designated by the requesting telecommunications carrier, including but not limited to, the requesting telecommunications carrier's collocated facilities; and

(iv) Permit, to the extent technically feasible, a requesting telecommunications carrier to obtain the functionality provided by the incumbent LEC's digital cross-connect systems in the same manner that the incumbent LEC provides such functionality to interexchange carriers.

(e) *Signaling networks and call-related databases.* An incumbent LEC shall provide nondiscriminatory access, in accordance with §51.311 and section 251(c)(3) of the Act, to signaling networks, call-related databases, and service management systems on an unbundled basis to any requesting telecommunications carrier for the provision of a telecommunications service.

(1) *Signaling networks.* Signaling networks include, but are not limited to, signaling links and signaling transfer points.

(i) When a requesting telecommunications carrier purchases unbundled switching capability from an incumbent LEC, the incumbent LEC shall provide access from that switch in the same manner in which it obtains such access itself.

(ii) An incumbent LEC shall provide a requesting telecommunications carrier with its own switching facilities access to the incumbent LEC's signaling network for each of the requesting telecommunications carrier's switches. This connection shall be made in the same manner as an incumbent LEC connects one of its own switches to a signaling transfer point.

(2) *Call-related databases.* Call-related databases are defined as databases, other than operations support systems, that are used in signaling networks for billing and collection, or the transmission, routing, or other provision of a telecommunications service.

(i) For purposes of switch query and database response through a signaling network, an incumbent LEC shall provide access to its call-related databases, including but not limited to, the Calling Name Database, 911 Database, E911 Database, Line Information Database, Toll Free Calling Database, Advanced Intelligent Network Databases, and downstream number portability databases by means of physical access at the signaling transfer point linked to the unbundled databases. The requirements in this section relating to the Calling Name Database, 911 Database, and E911 Database are not effective until May 17, 2000.

(ii) Notwithstanding the incumbent LEC's general duty to unbundle call-related databases, an incumbent LEC shall not be required to unbundle the services created in the AIN platform and architecture that qualify for proprietary treatment.

(iii) An incumbent LEC shall allow a requesting telecommunications carrier that has purchased an incumbent LEC's local switching capability to use the incumbent LEC's service control point element in the same manner, and via the same signaling links, as the incumbent LEC itself.

(iv) An incumbent LEC shall allow a requesting telecommunications carrier that has deployed its own switch, and has linked that switch to an incumbent LEC's signaling system, to gain access to the incumbent LEC's service control point in a manner that allows the requesting carrier to provide any call-related database-supported services to customers served by the requesting telecommunications carrier's switch.

(v) An incumbent LEC shall provide a requesting telecommunications carrier with access to call-related databases in a manner that complies with section 222 of the Act.

(3) *Service management systems*:

(i) A service management system is defined as a computer database or system not part of the public switched network that, among other things:

(A) Interconnects to the service control point and sends to that service control point the information and call processing instructions needed for a network switch to process and complete a telephone call; and

(B) Provides telecommunications carriers with the capability of entering and storing data regarding the processing and completing of a telephone call.

(ii) An incumbent LEC shall provide a requesting telecommunications carrier with the information necessary to enter correctly, or format for entry, the information relevant for input into the incumbent LEC's service management system.

(iii) An incumbent LEC shall provide a requesting telecommunications carrier the same access to design, create, test, and deploy Advanced Intelligent Network-based services at the service management system, through a service creation environment, that the incumbent LEC provides to itself.

(iv) An incumbent LEC shall provide a requesting telecommunications carrier access to service management systems in a manner that complies with section 222 of the Act.

(f) *Operator services and directory assistance.* An incumbent LEC shall provide nondiscriminatory access in accordance with § 51.311 and section 251(c)(3) of the Act to operator services and directory assistance on an unbundled basis to any requesting telecommunications carrier for the provision of a telecommunications service only where the incumbent LEC does not provide the requesting telecommunications carrier with customized routing or a compatible signaling protocol. Operator services are any automatic or live assistance to a consumer to arrange for billing or completion, or both, of a telephone call. Directory assistance is a service that allows subscribers to retrieve telephone numbers of other subscribers.

(g) *Operations support systems.* An incumbent LEC shall provide nondiscriminatory access in accordance with § 51.311 and section 251(c)(3) of the Act to operations support systems on an unbundled basis to any requesting telecommunications carrier for the provision of a telecommunications service. Operations support system functions consist of pre-ordering, ordering, provisioning, maintenance and repair, and billing functions supported by an incumbent LEC's databases and information. An incumbent LEC, as part of its duty to provide access to the pre-ordering function, must provide the requesting carrier with nondiscriminatory access to the same detailed information about the loop that is available to the incumbent LEC. The requirements in this section relating to loop qualification information are not effective until May 17, 2000.

(h) *High frequency portion of the loop.*

(1) The high frequency portion of the loop network element is defined as the frequency range above the voiceband on a copper loop facility that is being used to carry analog circuit-switched voiceband transmissions.

(2) An incumbent LEC shall provide nondiscriminatory access in accordance with § 51.311 of these rules and section 251(c)(3) of the Act to the high frequency portion of a loop to any requesting telecommunications carrier for the provision of a telecommunications service conforming with § 51.230 of these rules.

(3) An incumbent LEC shall only provide a requesting carrier with access to the high frequency portion of the loop if the incumbent LEC is providing, and continues to provide, analog circuit-switched voiceband services on the particular loop for which the requesting carrier seeks access.

(4) *Control of the loop and splitter functionality.* In situations where a requesting carrier is obtaining access to the high frequency portion of the loop, the incumbent LEC may maintain control over the loop and splitter equipment and functions, and shall provide to requesting carriers loop and splitter functionality that is compatible with any transmission technology that the requesting carrier seeks to deploy using the high frequency portion of the loop, as defined in this subsection, provided that such transmission technology is presumed to be deployable pursuant to § 51.230.

(5) *Loop conditioning.* (i) An incumbent LEC must condition loops to enable requesting carriers to access the high frequency portion of the loop spectrum, in accordance with §§ 51.319(a)(3), and 51.319(h)(1). If the incumbent LEC seeks compensation from the requesting carrier for line conditioning, the requesting carrier has the option of refusing, in whole, or in part, to have the line conditioned, and a requesting carrier's refusal of some or all aspects of line conditioning will not diminish its right of access to the high frequency portion of the loop.

(ii) Where conditioning the loop will significantly degrade, as defined in § 51.233, the voiceband services that the incumbent LEC is currently providing over that loop, the incumbent LEC must either:

(A) Locate another loop that has been or can be conditioned, migrate the incumbent LEC's voiceband service to that loop, and provide the requesting carrier with access to the high frequency portion of the alternative loop; or

(B) Make a showing to the relevant state commission that the original loop cannot be conditioned without significantly degrading voiceband services on that loop, as defined in § 51.233, and that there is no adjacent or alternative loop available that can be conditioned or to which the customer's voiceband service can be moved to enable line sharing.

(iii) If the relevant State commission concludes that a loop cannot be conditioned without significantly degrading the voiceband service, the incumbent LEC cannot then or subsequently condition that loop to provide advanced services to its own customers without first making available to any requesting carrier the high frequency portion of the newly-conditioned loop.

(6) *Digital loop carrier systems.* Incumbent LECs must provide to requesting carriers unbundled access to the high frequency portion of the loop at the remote terminal as well as the central office, pursuant to § 51.319(a)(2) and § 51.319(h)(1).

(7) *Maintenance, repair, and testing.* (i) Incumbent LECs must provide, on a nondiscriminatory basis, physical loop test access points to requesting carriers at the splitter, through a cross-connection to the competitor's collocation space, or through a standardized interface, such as an intermediate distribution frame or a test access server, for the purposes of loop testing, maintenance, and repair activities.

(ii) An incumbent seeking to utilize an alternative physical access methodology may request approval to do so from the relevant state commission, but must show that the proposed alternative method is reasonable, nondiscriminatory, and will not disadvantage a requesting carrier's ability to perform loop or service testing, maintenance or repair.

[65 FR 2551, Jan. 18, 2000; 65 FR 19334, Apr. 11, 2000]

**§ 51.321 Methods of obtaining interconnection and access to unbundled elements under section 251 of the Act.**

(a) Except as provided in paragraph (e) of this section, an incumbent LEC shall provide, on terms and conditions that are just, reasonable, and nondiscriminatory in accordance with the requirements of this part, any technically feasible method of obtaining interconnection or access to unbundled network elements at a particular point upon a request by a telecommunications carrier.

(b) Technically feasible methods of obtaining interconnection or access to unbundled network elements include, but are not limited to:

(1) Physical collocation and virtual collocation at the premises of an incumbent LEC; and

(2) Meet point interconnection arrangements.

(c) A previously successful method of obtaining interconnection or access to unbundled network elements at a particular premises or point on any incumbent LEC's network is substantial evidence that such method is technically feasible in the case of substantially similar network premises or points. A requesting telecommunications carrier seeking a particular collocation arrangement, either physical or virtual, is entitled to a presumption that such arrangement is technically feasible if any LEC has deployed such collocation arrangement in any incumbent LEC premises.

(d) An incumbent LEC that denies a request for a particular method of obtaining interconnection or access to unbundled network elements on the incumbent LEC's network must prove to the state commission that the requested method of obtaining interconnection or access to unbundled network elements at that point is not technically feasible.

(e) An incumbent LEC shall not be required to provide for physical collocation of equipment necessary for interconnection or access to unbundled network elements at the incumbent LEC's premises if it demonstrates to the state commission that physical collocation is not practical for technical reasons or because of space limitations.

In such cases, the incumbent LEC shall be required to provide virtual collocation, except at points where the incumbent LEC proves to the state commission that virtual collocation is not technically feasible. If virtual collocation is not technically feasible, the incumbent LEC shall provide other methods of interconnection and access to unbundled network elements to the extent technically feasible.

(f) An incumbent LEC shall submit to the state commission, subject to any protective order as the state commission may deem necessary, detailed floor plans or diagrams of any premises where the incumbent LEC claims that physical collocation is not practical because of space limitations. These floor plans or diagrams must show what space, if any, the incumbent LEC or any of its affiliates has reserved for future use, and must describe in detail the specific future uses for which the space has been reserved and the length of time for each reservation. An incumbent LEC that contends space for physical collocation is not available in an incumbent LEC premises must also allow the requesting carrier to tour the entire premises in question, not only the area in which space was denied, without charge, within ten days of the receipt of the incumbent's denial of space. An incumbent LEC must allow a requesting telecommunications carrier reasonable access to its selected collocation space during construction.

(g) An incumbent LEC that is classified as a Class A company under § 32.11 of this chapter and that is not a National Exchange Carrier Association interstate tariff participant as provided in part 69, subpart G, shall continue to provide expanded interconnection service pursuant to interstate tariff in accordance with §§ 64.1401, 64.1402, 69.121 of this chapter, and the Commission's other requirements.

(h) Upon request, an incumbent LEC must submit to the requesting carrier within ten days of the submission of the request a report indicating the incumbent LEC's available collocation space in a particular LEC premises. This report must specify the amount of collocation space available at each requested premises, the number of collocators, and any modifications in the use of the space since the last report. This report must also include measures that the incumbent LEC is taking to make additional space available for collocation. The incumbent LEC must maintain a publicly available document, posted for viewing on the incumbent LEC's publically available Internet site, indicating all premises that are full, and must update such a document within ten days of the date at which a premises runs out of physical collocation space.

(i) An incumbent LEC must, upon request, remove obsolete unused equipment from their premises to increase the amount of space available for collocation.

[61 FR 45619, Aug. 28, 1996, as amended at 64 FR 23241, Apr. 30, 1999; 65 FR 54438, Sept. 8, 2000]

EFFECTIVE DATE NOTE: At 65 FR 54438, Sept. 8, 2000, § 51.321 was amended by revising paragraph (f), effective Oct. 10, 2000. For the convenience of the user, the superseded text is set forth as follows.

**§ 51.321 Methods of obtaining interconnection and access to unbundled elements under section 251 of the Act.**

* * * * *

(f) An incumbent LEC shall submit to the state commission, subject to any protective order as the state commission may deem necessary, detailed floor plans or diagrams of any premises where the incumbent LEC claims that physical collocation is not practical because of space limitations. An incumbent LEC that contends space for physical collocation is not available in an incumbent LEC premises must also allow the requesting carrier to tour the entire premises in question, not just the area in which space was denied, without charge, within ten days of the receipt of the incumbent LEC's denial of space.

* * * * *

**§ 51.323 Standards for physical collocation and virtual collocation.**

(a) An incumbent LEC shall provide physical collocation and virtual collocation to requesting telecommunications carriers.

(b) Whenever an incumbent LEC objects to collocation of equipment by a requesting telecommunications carrier for the purposes within the scope of

section 251(c)(6) of the Act, the incumbent LEC shall prove to the state commission that the equipment will not be actually used by the telecommunications carrier for the purpose of obtaining interconnection or access to unbundled network elements. An incumbent LEC may not object to the collocation of equipment on the grounds that the equipment does not comply with safety or engineering standards that are more stringent than the safety or engineering standards that the incumbent LEC applies to its own equipment. An incumbent LEC may not object to the collocation of equipment on the ground that the equipment fails to comply with Network Equipment and Building Specifications performance standards or any other performance standards. An incumbent LEC that denies collocation of a competitor's equipment, citing safety standards, must provide to the competitive LEC within five business days of the denial a list of all equipment that the incumbent LEC locates at the premises in question, together with an affidavit attesting that all of that equipment meets or exceeds the safety standard that the incumbent LEC contends the competitor's equipment fails to meet. This affidavit must set forth in detail: the exact safety requirement that the requesting carrier's equipment does not satisfy; the incumbent LEC's basis for concluding that the requesting carrier's equipment does not meet this safety requirement; and the incumbent LEC's basis for concluding why collocation of equipment not meeting this safety requirement would compromise network safety. Equipment used for interconnection or access to unbundled network elements includes, but is not limited to:

(1) Transmission equipment including, but not limited to, optical terminating equipment and multiplexers, and

(2) Equipment being collocated to terminate basic transmission facilities pursuant to §§66.1401 and 64.1402 of this chapter as of August 1, 1996.

(3) Digital subscriber line access multiplexers, routers, asyncronous transfer

(c) Nothing in this section requires an incumbent LEC to permit collocation of equipment used solely for switching or solely to provide enhanced services; provided, however, that an incumbent LEC may not place any limitations on the ability of requesting carriers to use all the features, functions, and capabilities of equipment collocated pursuant to paragraph (b) of this section, including, but not limited to, switching and routing features and functions and enhanced services functionalities.

(d) When an incumbent LEC provides physical collocation, virtual collocation, or both, the incumbent LEC shall:

(1) Provide an interconnection point or points, physically accessible by both the incumbent LEC and the collocating telecommunications carrier, at which the fiber optic cable carrying an interconnector's circuits can enter the incumbent LEC's premises, provided that the incumbent LEC shall designate interconnection points as close as reasonably possible to its premises;

(2) Provide at least two such interconnection points at each incumbent LEC premises at which there are at least two entry points for the incumbent LEC's cable facilities, and at which space is available for new facilities in at least two of those entry points;

(3) Permit interconnection of copper or coaxial cable if such interconnection is first approved by the state commission; and

(4) Permit physical collocation of microwave transmission facilities except where such collocation is not practical for technical reasons or because of space limitations, in which case virtual collocation of such facilities is required where technically feasible.

(e) When providing virtual collocation, an incumbent LEC shall, at a minimum, install, maintain, and repair collocated equipment identified in paragraph (b) of this section within the same time periods and with failure rates that are no greater than those that apply to the performance of similar functions for comparable equipment of the incumbent LEC itself.

(f) An incumbent LEC shall allocate space for the collocation of the equipment identified in paragraph (b) of this

section in accordance with the following requirements:

(1) An incumbent LEC shall make space available within or on its premises to requesting telecommunications carriers on a first-come, first-served basis, provided, however, that the incumbent LEC shall not be required to lease or construct additional space to provide for physical collocation when existing space has been exhausted;

(2) To the extent possible, an incumbent LEC shall make contiguous space available to requesting telecommunications carriers that seek to expand their existing collocation space;

(3) When planning renovations of existing facilities or constructing or leasing new facilities, an incumbent LEC shall take into account projected demand for collocation of equipment;

(4) An incumbent LEC may retain a limited amount of floor space for its own specific future uses, provided, however, that neither the incumbent LEC nor any of its affiliates may reserve space for future use on terms more favorable than those that apply to other telecommunications carriers seeking to reserve collocation space for their own future use;

(5) An incumbent LEC shall relinquish any space held for future use before denying a request for virtual collocation on the grounds of space limitations, unless the incumbent LEC proves to the state commission that virtual collocation at that point is not technically feasible; and

(6) An incumbent LEC may impose reasonable restrictions on the warehousing of unused space by collocating telecommunications carriers, provided, however, that the incumbent LEC shall not set maximum space limitations applicable to such carriers unless the incumbent LEC proves to the state commission that space constraints make such restrictions necessary.

(g) An incumbent LEC shall permit collocating telecommunications carriers to collocate equipment and connect such equipment to unbundled network transmission elements obtained from the incumbent LEC, and shall not require such telecommunications carriers to bring their own transmission facilities to the incumbent LEC's premises in which they seek to collocate equipment.

(h) An incumbent LEC shall permit a collocating telecommunications carrier to interconnect its network with that of another collocating telecommunications carrier at the incumbent LEC's premises and to connect its collocated equipment to the collocated equipment of another telecommunications carrier within the same premises provided that the collocated equipment is also used for interconnection with the incumbent LEC or for access to the incumbent LEC's unbundled network elements.

(1) An incumbent LEC shall provide, at the request of a collocating telecommunications carrier, the connection between the equipment in the collocated spaces of two or more telecommunications carriers. The incumbent LEC must permit any collocating telecommunications carrier to construct its own connection between the carrier's equipment and that of one or more collocating carriers, if the telecommunications carrier does not request the incumbent LEC's construction of such facilities. The incumbent LEC must permit the requesting carrier to construct such facilities using copper or optical fiber equipment.

(2) An incumbent LEC shall permit collocating telecommunications carriers to place their own connecting transmission facilities within the incumbent LEC's premises outside of the actual physical collocation space, subject only to reasonable safety limitations.

(i) As provided herein, an incumbent LEC may require reasonable security arrangements to protect its equipment and ensure network reliability. An incumbent LEC may only impose security arrangements that are as stringent as the security arrangements that incumbent LECs maintain at their own premises for their own employees or authorized contractors. An incumbent LEC must allow collocating parties to access their collocated equipment 24 hours a day, seven days a week, without requiring either a security escort of any kind or delaying a competitor's employees' entry into the incumbent LEC's premises. Reasonable security

measures that the incumbent LEC may adopt include:

(1) Installing security cameras or other monitoring systems; or

(2) Requiring competitive LEC personnel to use badges with computerized tracking systems; or

(3) Requiring competitive LEC employees to undergo the same level of security training, or its equivalent, that the incumbent's own employees, or third party contractors providing similar functions, must undergo; provided, however, that the incumbent LEC may not require competitive LEC employees to receive such training from the incumbent LEC itself, but must provide information to the competitive LEC on the specific type of training required so the competitive LEC's employees can conduct their own training.

(j) An incumbent LEC shall permit a collocating telecommunications carrier to subcontract the construction of physical collocation arrangements with contractors approved by the incumbent LEC, provided, however, that the incumbent LEC shall not unreasonably withhold approval of contractors. Approval by an incumbent LEC shall be based on the same criteria it uses in approving contractors for its own purposes.

(k) An incumbent LEC's physical collocation offering must include the following:

(1) *Shared collocation cages.* A shared collocation cage is a caged collocation space shared by two or more competitive LECs pursuant to terms and conditions agreed to by the competitive LECs. In making shared cage arrangements available, an incumbent LEC may not increase the cost of site preparation or nonrecurring charges above the cost for provisioning such a cage of similar dimensions and material to a single collocating party. In addition, the incumbent must prorate the charge for site conditioning and preparation undertaken by the incumbent to construct the shared collocation cage or condition the space for collocation use, regardless of how many carriers actually collocate in that cage, by determining the total charge for site preparation and allocating that charge to a collocating carrier based on the percentage of the total space utilized by that carrier. An incumbent LEC must make shared collocation space available in single-bay increments or their equivalent, i.e., a competing carrier can purchase space in increments small enough to collocate a single rack, or bay, of equipment.

(2) *Cageless collocation.* Incumbent LECs must allow competitors to collocate in any unused space in the incumbent LEC's premises, without requiring the construction of a cage or similar structure, and without requiring the creation of a separate entrance to the competitor's collocation space. An incumbent LEC may require collocating carriers to use a central entrance to the incumbent's building, but may not require construction of a new entrance for competitors' use, and once inside the building, incumbent LECs must permit collocating carriers to have direct access to their equipment. An incumbent LEC may not require competitors to use an intermediate interconnection arrangement in lieu of direct connection to the incumbent's network if technically feasible. In addition, an incumbent LEC must give competitors the option of collocating equipment in any unused space within the incumbent's premises, and may not require competitors to collocate in a room or isolated space separate from the incumbent's own equipment. An incumbent LEC must make cageless collocation space available in single-bay increments, meaning that a competing carrier can purchase space in increments small enough to collocate a single rack, or bay, of equipment.

(3) *Adjacent space collocation.* An incumbent LEC must make available, where physical collocation space is legitimately exhausted in a particular incumbent LEC structure, collocation in adjacent controlled environmental vaults, controlled environmental huts, or similar structures located at the incumbent LEC premises to the extent technically feasible. The incumbent LEC must permit a requesting telecommunications carrier to construct or otherwise procure such an adjacent structure, subject only to reasonable safety and maintenance requirements. The incumbent must provide power and

physical collocation services and facilities, subject to the same nondiscrimination requirements as applicable to any other physical collocation arrangement. The incumbent LEC must permit the requesting carrier to place its own equipment, including, but not limited to, copper cables, coaxial cables, fiber cables, and telecommunications equipment, in adjacent facilities constructed by the incumbent LEC, the requesting carrier, or a third-party. If physical collocation space becomes available in a previously exhausted incumbent LEC structure, the incumbent LEC must not require a carrier to move, or prohibit a competitive LEC from moving, a collocation arrangement into that structure. Instead, the incumbent LEC must continue to allow the carrier to collocate in any adjacent controlled environmental vault, controlled environmental vault, or similar structure that the carrier has constructed or otherwise procured.

(l) An incumbent LEC must offer to provide and provide all forms of physical collocation (*i.e.,* caged, cageless, shared, and adjacent) within the following deadlines, except to the extent a state sets its own deadlines or the incumbent LEC has demonstrated to the state commission that physical collocation is not practical for technical reasons or because of space limitations.

(1) Within ten days after receiving an application for physical collocation, an incumbent LEC must inform the requesting carrier whether the application meets each of the incumbent LEC's established collocation standards. A requesting carrier that resubmits a revised application curing any deficiencies in an application for physical collocation within ten days after being informed of them retains its position within any collocation queue that the incumbent LEC maintains pursuant to paragraph (f)(1) of this section.

(2) Except as stated in paragraphs (l)(3) and (l)(4) of this section, an incumbent LEC must complete provisioning of a requested physical collocation arrangement within 90 days after receiving an application that meets the incumbent LEC's established collocation application standards.

(3) An incumbent LEC need not meet the deadline set forth in paragraph (l)(2) of this section if, after receipt of any price quotation provided by the incumbent LEC, the telecommunications carrier requesting collocation does not notify the incumbent LEC that physical collocation should proceed.

(4) If, within seven days of the requesting carrier's receipt of any price quotation provided by the incumbent LEC, the telecommunications carrier requesting collocation does not notify the incumbent LEC that physical collocation should proceed, then the incumbent LEC need not complete provisioning of a requested physical collocation arrangement until 90 days after receiving such notification from the requesting telecommunications carrier.

[61 FR 45619, Aug. 28, 1996, as amended at 64 FR 23242, Apr. 30, 1999; 65 FR 54439, Sept. 8, 2000]

EFFECTIVE DATE NOTE: At 65 FR 54439, Sept. 8, 2000, § 51.323 was amended by revising paragraphs (b) introductory text, (f)(4), and (k)(3), and by adding paragraph (l), effective Oct. 10, 2000. For the convenience of the user, the superseded text is set forth to follow.

**§ 51.323 Standards for physical collocation and virtual collocation.**

* * * * *

(b) An incumbent LEC shall permit the collocation of any type of equipment used or useful for interconnection or access to unbundled network elements. Whenever an incumbent LEC objects to collocation of equipment by a requesting telecommunications carrier for the purposes within the scope of section 251(c)(6) of the Act, the incumbent LEC shall prove to the state commission that the equipment will not be actually used by the telecommunications carrier for the purpose of obtaining interconnection or access to unbundled network elements. An incumbent LEC may not object to the collocation of equipment on the grounds that the equipment does not comply with safety or engineering standards that are more stringent than the safety or engineering standards that the incumbent LEC applies to its own equipment. An incumbent LEC may not object to the collocation of equipment on the ground that the equipment fails to comply with National Equipment and Building Specifications performance standards. An incumbent LEC that denies collocation of a competitor's equipment, citing safety standards, must provide to the competitive LEC within five business days of the denial a list

of all equipment that the incumbent LEC locates within the premises in question, together with an affidavit attesting that all of that equipment meets or exceeds the safety standard that the incumbent LEC contends the competitor's equipment fails to meet. Equipment used for interconnection and access to unbundled network elements includes, but is not limited to:

* * * * *

(f) * * *

(4) An incumbent LEC may retain a limited amount of floor space for its own specific future uses, provided, however, that the incumbent LEC may not reserve space for future use on terms more favorable than those that apply to other telecommunications carriers seeking to reserve collocation space for their own future use;

* * * * *

(k) * * *

(3) *Adjacent space collocation.* An incumbent LEC must make available, where space is legitimately exhausted in a particular incumbent LEC premises, collocation in adjacent controlled environmental vaults or similar structures to the extent technically feasible. The incumbent LEC must permit the new entrant to construct or otherwise procure such an adjacent structure, subject only to reasonable safety and maintenance requirements. The incumbent must provide power and physical collocation services and facilities, subject to the same nondiscrimination requirements as applicable to any other physical collocation arrangement. The incumbent LEC must permit the requesting carrier to place its own equipment, including, but not limited to, copper cables, coaxial cables, fiber cables, and telecommunications equipment, in adjacent facilities constructed by either the incumbent LEC or by the requesting carrier itself.

### § 51.325 Notice of network changes: Public notice requirement.

(a) An incumbent local exchange carrier (''LEC'') must provide public notice regarding any network change that:

(1) Will affect a competing service provider's performance or ability to provide service;

(2) Will affect the incumbent LEC's interoperability with other service providers; or

(3) Will affect the manner in which customer premises equipment is attached to the interstate network.

(b) For purposes of this section, *interoperability* means the ability of two or more facilities, or networks, to be connected, to exchange information, and to use the information that has been exchanged.

(c) Until public notice has been given in accordance with §§ 51.325 through 51.335, an incumbent LEC may not disclose to separate affiliates, separated affiliates, or unaffiliated entities (including actual or potential competing service providers or competitors), information about planned network changes that are subject to this section.

(d) For the purposes of §§ 51.325 through 51.335, the term *services* means telecommunications services or information services.

[61 FR 47351, Sept. 6, 1996, as amended at 64 FR 14148, Mar. 24, 1999]

### § 51.327 Notice of network changes: Content of notice.

(a) Public notice of planned network changes must, at a minimum, include:

(1) The carrier's name and address;

(2) The name and telephone number of a contact person who can supply additional information regarding the planned changes;

(3) The implementation date of the planned changes;

(4) The location(s) at which the changes will occur;

(5) A description of the type of changes planned (Information provided to satisfy this requirement must include, as applicable, but is not limited to, references to technical specifications, protocols, and standards regarding transmission, signaling, routing, and facility assignment as well as references to technical standards that would be applicable to any new technologies or equipment, or that may otherwise affect interconnection); and

(6) A description of the reasonably foreseeable impact of the planned changes.

(b) The incumbent LEC also shall follow, as necessary, procedures relating to confidential or proprietary information contained in § 51.335.

[61 FR 47351, Sept. 6, 1996]

### § 51.329 Notice of network changes: Methods for providing notice.

(a) In providing the required notice to the public of network changes, an

incumbent LEC may use one of the following methods:

(1) Filing a public notice with the Commission; or

(2) Providing public notice through industry fora, industry publications, or the carrier's publicly accessible Internet site. If an incumbent LEC uses any of the methods specified in paragraph (a)(2) of this section, it also must file a certification with the Commission that includes:

(i) A statement that identifies the proposed changes;

(ii) A statement that public notice has been given in compliance with §§ 51.325 through 51.335; and

(iii) A statement identifying the location of the change information and describing how this information can be obtained.

(b) Until the planned change is implemented, an incumbent LEC must keep the notice available for public inspection, and amend the notice to keep the information complete, accurate and up-to-date.

(c) *Specific filing requirements.* Commission filings under this section must be made as follows:

(1) The public notice or certification must be labeled with one of the following titles, as appropriate: ''Public Notice of Network Change Under Rule 51.329(a),'' ''Certification of Public Notice of Network Change Under Rule 51.329(a),'' ''Short Term Public Notice Under Rule 51.333(a),'' or ''Certification of Short Term Public Notice Under Rule 51.333(a).''

(2) Two paper copies of the incumbent LEC's public notice or certification, required under paragraph (a) of this section, must be sent to ''Secretary, Federal Communications Commission, Washington, DC 20554.'' The date on which this filing is received by the Secretary is considered the official filing date.

(3) In addition, one paper copy and one diskette copy must be sent to the ''Chief, Network Services Division, Common Carrier Bureau, Federal Communications Commission, Washington, DC 20554.'' The diskette copy must be on a standard 3½ inch diskette, formatted in IBM-compatible format to be readable by high-density floppy drives operating under MS DOS 5.X or later compatible versions, and shall be in a word-processing format designated, from time-to-time, in public notices released by the Network Services Division. The diskette must be submitted in ''read only'' mode, and must be clearly labeled with the carrier's name, the filing date, and an identification of the diskette's contents.

[61 FR 47351, Sept. 6, 1996]

### § 51.331 Notice of network changes: Timing of notice.

(a) An incumbent LEC shall give public notice of planned changes at the make/buy point, as defined in paragraph (b) of this section, but at least 12 months before implementation, except as provided below:

(1) If the changes can be implemented within twelve months of the make/buy point, public notice must be given at the make/buy point, but at least six months before implementation.

(2) If the changes can be implemented within six months of the make/buy point, public notice may be given pursuant to the short term notice procedures provided in § 51.333.

(b) For purposes of this section, the *make/buy point* is the time at which an incumbent LEC decides to make for itself, or to procure from another entity, any product the design of which affects or relies on a new or changed network interface. If an incumbent LEC's planned changes do not require it to make or to procure a product, then the make/buy point is the point at which the incumbent LEC makes a definite decision to implement a network change.

(1) For purposes of this section, a *product* is any hardware r software for use in an incumbent LEC's network or in conjunction with its facilities that, when installed, could affect the compatibility of an interconnected service provider's network, facilities or services with an incumbent LEC's existing telephone network, facilities or services, or with any of an incumbent carrier's services or capabilities.

(2) For purposes of this section a *definite decision* is reached when an incumbent LEC determines that the change is warranted, establishes a timetable for anticipated implementation, and

takes any action toward implementation of the change within its network.

[61 FR 47352, Sept. 6, 1996]

**§ 51.333 Notice of network changes: Short term notice.**

(a) *Certificate of service.* If an incumbent LEC wishes to provide less than six months notice of planned network changes, the public notice or certification that it files with the Commission must include a certificate of service in addition to the information required by § 51.327(a) or § 51.329(a)(2), as applicable. The certificate of service shall include:

(1) A statement that, at least five business days in advance of its filing with the Commission, the incumbent LEC served a copy of its public notice upon each telephone exchange service provider that directly interconnects with the incumbent LEC's network; and

(2) The name and address of each such telephone exchange service provider upon which the notice was served.

(b) *Implementation date.* The Commission will release a public notice of such short term notice filings. Short term notices shall be deemed final on the tenth business day after the release of the Commission's public notice, unless an objection is filed, pursuant to paragraph (c) of this section.

(c) *Objection procedures.* An objection to an incumbent LEC's short term notice may be filed by an information service provider or telecommunication service provider that directly interconnects with the incumbent LEC's network. Such objections must be filed with the Commission, and served on the incumbent LEC, no later than the ninth business day following the release of the Commission's public notice. All objections to an incumbent LEC's short term notice must:

(1) State specific reasons why the objector cannot accommodate the incumbent LEC's changes by the date stated in the incumbent LEC's public notice and must indicate any specific technical information or other assistance required that would enable the objector to accommodate those changes;

(2) List steps the objector is taking to accommodate the incumbent LEC's changes on an expedited basis;

(3) State the earliest possible date (not to exceed six months from the date the incumbent LEC gave its original public notice under this section) by which the objector anticipates that it can accommodate the incumbent LEC's changes, assuming it receives the technical information or other assistance requested under paragraph (c)(1) of this section;

(4) Provide any other information relevant to the objection; and

(5) Provide the following affidavit, executed by the objector's president, chief executive officer, or other corporate officer or official, who has appropriate authority to bind the corporation, and knowledge of the details of the objector's inability to adjust its network on a timely basis:

> ''I, (*name and title*), under oath and subject to penalty for perjury, certify that I have read this objection, that the statements contained in it are true, that there is good ground to support the objection, and that it is not interposed for purposes of delay. I have appropriate authority to make this certification on behalf of (*objector*) and I agree to provide any information the Commission may request to allow the Commission to evaluate the truthfulness and validity of the statements contained in this objection.''

(d) *Response to objections.* If an objection is filed, an incumbent LEC shall have until no later than the fourteenth business day following the release of the Commission's public notice to file with the Commission a response to the objection and to serve the response on all parties that filed objections. An incumbent LEC's response must:

(1) Provide information responsive to the allegations and concerns identified by the objectors;

(2) State whether the implementation date(s) proposed by the objector(s) are acceptable;

(3) Indicate any specific technical assistance that the incumbent LEC is willing to give to the objectors; and

(4) Provide any other relevant information.

(e) *Resolution.* If an objection is filed pursuant to paragraph (c) of this section, then the Chief, Network Services Division, Common Carrier Bureau, will

issue an order determining a reasonable public notice period, *provided however,* that if an incumbent LEC does not file a response within the time period allotted, or if the incumbent LEC's response accepts the latest implementation date stated by an objector, then the incumbent LEC's public notice shall be deemed amended to specify the implementation date requested by the objector, without further Commission action. An incumbent LEC must amend its public notice to reflect any change in the applicable implementation date pursuant to § 51.329(b).

[61 FR 47352, Sept. 6, 1996]

### § 51.335 Notice of network changes: Confidential or proprietary information.

(a) If an incumbent LEC claims that information otherwise required to be disclosed is confidential or proprietary, the incumbent LEC's public notice must include, in addition to the information identified in § 51.327(a), a statement that the incumbent LEC will make further information available to those signing a nondisclosure agreement.

(b) *Tolling the public notice period.* Upon receipt by an incumbent LEC of a competing service provider's request for disclosure of confidential or proprietary information, the applicable public notice period will be tolled until the parties agree on the terms of a nondisclosure agreement. An incumbent LEC receiving such a request must amend its public notice as follows:

(1) On the date it receives a request from a competing service provider for disclosure of confidential or proprietary information, to state that the notice period is tolled; and

(2) On the date the nondisclosure agreement is finalized, to specify a new implementation date.

[61 FR 47352, Sept. 6, 1996]

## Subpart E—Exemptions, Suspensions, and Modifications of Requirements of Section 251 of the Act

### § 51.401 State authority.

A state commission shall determine whether a telephone company is entitled, pursuant to section 251(f) of the Act, to exemption from, or suspension or modification of, the requirements of section 251 of the Act. Such determinations shall be made on a case-by-case basis.

### § 51.403 Carriers eligible for suspension or modification under section 251(f)(2) of the Act.

A LEC is not eligible for a suspension or modification of the requirements of section 251(b) or section 251(c) of the Act pursuant to section 251(f)(2) of the Act if such LEC, at the holding company level, has two percent or more of the subscriber lines installed in the aggregate nationwide.

### § 51.405 Burden of proof.

(a) Upon receipt of a bona fide request for interconnection, services, or access to unbundled network elements, a rural telephone company must prove to the state commission that the rural telephone company should be entitled, pursuant to section 251(f)(1) of the Act, to continued exemption from the requirements of section 251(c) of the Act.

(b) A LEC with fewer than two percent of the nation's subscriber lines installed in the aggregate nationwide must prove to the state commission, pursuant to section 251(f)(2) of the Act, that it is entitled to a suspension or modification of the application of a requirement or requirements of section 251(b) or 251(c) of the Act.

(c) In order to justify continued exemption under section 251(f)(1) of the Act once a bona fide request has been made, an incumbent LEC must offer evidence that the application of the requirements of section 251(c) of the Act

would be likely to cause undue economic burden beyond the economic burden that is typically associated with efficient competitive entry.

(d) In order to justify a suspension or modification under section 251(f)(2) of the Act, a LEC must offer evidence that the application of section 251(b) or section 251(c) of the Act would be likely to cause undue economic burden beyond the economic burden that is typically associated with efficient competitive entry.

## Subpart F—Pricing of Elements

### § 51.501 Scope.

(a) The rules in this subpart apply to the pricing of network elements, interconnection, and methods of obtaining access to unbundled elements, including physical collocation and virtual collocation.

(b) As used in this subpart, the term ''element'' includes network elements, interconnection, and methods of obtaining interconnection and access to unbundled elements.

### § 51.503 General pricing standard.

(a) An incumbent LEC shall offer elements to requesting telecommunications carriers at rates, terms, and conditions that are just, reasonable, and nondiscriminatory.

(b) An incumbent LEC's rates for each element it offers shall comply with the rate structure rules set forth in §§ 51.507 and 51.509, and shall be established, at the election of the state commission—

(1) Pursuant to the forward-looking economic cost-based pricing methodology set forth in §§ 51.505 and 51.511; or

(2) Consistent with the proxy ceilings and ranges set forth in § 51.513.

(c) The rates that an incumbent LEC assesses for elements shall not vary on the basis of the class of customers served by the requesting carrier, or on the type of services that the requesting carrier purchasing such elements uses them to provide.

### § 51.505 Forward-looking economic cost.

(a) *In general.* The forward-looking economic cost of an element equals the sum of:

(1) The total element long-run incremental cost of the element, as described in paragraph (b); and

(2) A reasonable allocation of forward-looking common costs, as described in paragraph (c).

(b) *Total element long-run incremental cost.* The total element long-run incremental cost of an element is the forward-looking cost over the long run of the total quantity of the facilities and functions that are directly attributable to, or reasonably identifiable as incremental to, such element, calculated taking as a given the incumbent LEC's provision of other elements.

(1) *Efficient network configuration.* The total element long-run incremental cost of an element should be measured based on the use of the most efficient telecommunications technology currently available and the lowest cost network configuration, given the existing location of the incumbent LEC's wire centers.

(2) *Forward-looking cost of capital.* The forward-looking cost of capital shall be used in calculating the total element long-run incremental cost of an element.

(3) *Depreciation rates.* The depreciation rates used in calculating forward-looking economic costs of elements shall be economic depreciation rates.

(c) *Reasonable allocation of forward-looking common costs*—(1) *Forward-looking common costs.* Forward-looking common costs are economic costs efficiently incurred in providing a group of elements or services (which may include all elements or services provided by the incumbent LEC) that cannot be attributed directly to individual elements or services.

(2) *Reasonable allocation.* (i) The sum of a reasonable allocation of forward-looking common costs and the total element long-run incremental cost of an element shall not exceed the stand-alone costs associated with the element. In this context, stand-alone costs are the total forward-looking costs, including corporate costs, that would be incurred to produce a given element if that element were provided by an efficient firm that produced nothing but the given element.

(ii) The sum of the allocation of forward-looking common costs for all elements and services shall equal the total forward-looking common costs, exclusive of retail costs, attributable to operating the incumbent LEC's total network, so as to provide all the elements and services offered.

(d) *Factors that may not be considered.* The following factors shall not be considered in a calculation of the forward-looking economic cost of an element:

(1) *Embedded costs.* Embedded costs are the costs that the incumbent LEC incurred in the past and that are recorded in the incumbent LEC's books of accounts;

(2) *Retail costs.* Retail costs include the costs of marketing, billing, collection, and other costs associated with offering retail telecommunications services to subscribers who are not telecommunications carriers, described in § 51.609;

(3) *Opportunity costs.* Opportunity costs include the revenues that the incumbent LEC would have received for the sale of telecommunications services, in the absence of competition from telecommunications carriers that purchase elements; and

(4) *Revenues to subsidize other services.* Revenues to subsidize other services include revenues associated with elements or telecommunications service offerings other than the element for which a rate is being established.

(e) *Cost study requirements.* An incumbent LEC must prove to the state commission that the rates for each element it offers do not exceed the forward-looking economic cost per unit of providing the element, using a cost study that complies with the methodology set forth in this section and § 51.511.

(1) A state commission may set a rate outside the proxy ranges or above the proxy ceilings described in § 51.513 only if that commission has given full and fair effect to the economic cost based pricing methodology described in this section and § 51.511 in a state proceeding that meets the requirements of paragraph (e)(2) of this section.

(2) Any state proceeding conducted pursuant to this section shall provide notice and an opportunity for comment to affected parties and shall result in the creation of a written factual record that is sufficient for purposes of review. The record of any state proceeding in which a state commission considers a cost study for purposes of establishing rates under this section shall include any such cost study.

### § 51.507 General rate structure standard.

(a) Element rates shall be structured consistently with the manner in which the costs of providing the elements are incurred.

(b) The costs of dedicated facilities shall be recovered through flat-rated charges.

(c) The costs of shared facilities shall be recovered in a manner that efficiently apportions costs among users. Costs of shared facilities may be apportioned either through usage-sensitive charges or capacity-based flat-rated charges, if the state commission finds that such rates reasonably reflect the costs imposed by the various users.

(d) Recurring costs shall be recovered through recurring charges, unless an incumbent LEC proves to a state commission that such recurring costs are de minimis. Recurring costs shall be considered de minimis when the costs of administering the recurring charge would be excessive in relation to the amount of the recurring costs.

(e) State commissions may, where reasonable, require incumbent LECs to recover nonrecurring costs through recurring charges over a reasonable period of time. Nonrecurring charges shall be allocated efficiently among requesting telecommunications carriers, and shall not permit an incumbent LEC to recover more than the total forward-looking economic cost of providing the applicable element.

(f) State commissions shall establish different rates for elements in at least three defined geographic areas within the state to reflect geographic cost differences.

(1) To establish geographically-deaveraged rates, state commissions may use existing density-related zone pricing plans described in § 69.123 of this chapter, or other such cost-related zone plans established pursuant to state law.

(2) In states not using such existing plans, state commissions must create a

minimum of three cost-related rate zones.

[61 FR 45619, Aug. 29, 1996, as amended at 64 FR 32207, June 16, 1999; 64 FR 68637, Dec. 8, 1999]

### § 51.509 Rate structure standards for specific elements.

In addition to the general rules set forth in § 51.507, rates for specific elements shall comply with the following rate structure rules.

(a) *Local loops.* Loop costs shall be recovered through flat-rated charges.

(b) *Local switching.* Local switching costs shall be recovered through a combination of a flat-rated charge for line ports and one or more flat-rated or per-minute usage charges for the switching matrix and for trunk ports.

(c) *Dedicated transmission links.* Dedicated transmission link costs shall be recovered through flat-rated charges.

(d) *Shared transmission facilities between tandem switches and end offices.* The costs of shared transmission facilities between tandem switches and end offices may be recovered through usage-sensitive charges, or in another manner consistent with the manner that the incumbent LEC incurs those costs.

(e) *Tandem switching.* Tandem switching costs may be recovered through usage-sensitive charges, or in another manner consistent with the manner that the incumbent LEC incurs those costs.

(f) *Signaling and call-related database services.* Signaling and call-related database service costs shall be usage-sensitive, based on either the number of queries or the number of messages, with the exception of the dedicated circuits known as signaling links, the cost of which shall be recovered through flat-rated charges.

(g) *Collocation.* Collocation costs shall be recovered consistent with the rate structure policies established in the *Expanded Interconnection* proceeding, CC Docket No. 91–141.

### § 51.511 Forward-looking economic cost per unit.

(a) The forward-looking economic cost per unit of an element equals the forward-looking economic cost of the element, as defined in § 51.505, divided by a reasonable projection of the sum of the total number of units of the element that the incumbent LEC is likely to provide to requesting telecommunications carriers and the total number of units of the element that the incumbent LEC is likely to use in offering its own services, during a reasonable measuring period.

(b)(1) With respect to elements that an incumbent LEC offers on a flat-rate basis, the number of units is defined as the discrete number of elements (*e.g.*, local loops or local switch ports) that the incumbent LEC uses or provides.

(2) With respect to elements that an incumbent LEC offers on a usage-sensitive basis, the number of units is defined as the unit of measurement of the usage (*e.g.*, minutes of use or call-related database queries) of the element.

### § 51.513 Proxies for forward-looking economic cost.

(a) A state commission may determine that the cost information available to it with respect to one or more elements does not support the adoption of a rate or rates that are consistent with the requirements set forth in §§ 51.505 and 51.511. In that event, the state commission may establish a rate for an element that is consistent with the proxies specified in this section, provided that:

(1) Any rate established through use of such proxies shall be superseded once the state commission has completed review of a cost study that complies with the forward-looking economic cost based pricing methodology described in §§ 51.505 and 51.511, and has concluded that such study is a reasonable basis for establishing element rates; and

(2) The state commission sets forth in writing a reasonable basis for its selection of a particular rate for the element.

(b) The constraints on proxy-based rates described in this section apply on a geographically averaged basis. For purposes of determining whether geographically deaveraged rates for elements comply with the provisions of this section, a geographically averaged proxy-based rate shall be computed based on the weighted average of the actual, geographically deaveraged

rates that apply in separate geographic areas in a state.

(c) *Proxies for specific elements*—(1) *Local loops.* For each state listed below, the proxy-based monthly rate for unbundled local loops, on a statewide weighted average basis, shall be no greater than the figures listed in the table below. (The Commission has not established a default proxy ceiling for loop rates in Alaska.)

TABLE

| State | Proxy ceiling |
|---|---|
| Alabama | $17.25 |
| Arizona | 12.85 |
| Arkansas | 21.18 |
| California | 11.10 |
| Colorado | 14.97 |
| Connecticut | 13.23 |
| Delaware | 13.24 |
| District of Columbia | 10.81 |
| Florida | 13.68 |
| Georgia | 16.09 |
| Hawaii | 15.27 |
| Idaho | 20.16 |
| Illinois | 13.12 |
| Indiana | 13.29 |
| Iowa | 15.94 |
| Kansas | 19.85 |
| Kentucky | 16.70 |
| Louisiana | 16.98 |
| Maine | 18.69 |
| Maryland | 13.36 |
| Massachusetts | 9.83 |
| Michigan | 15.27 |
| Minnesota | 14.81 |
| Mississippi | 21.97 |
| Missouri | 18.32 |
| Montana | 25.18 |
| Nebraska | 18.05 |
| Nevada | 18.95 |
| New Hampshire | 16.00 |
| New Jersey | 12.47 |
| New Mexico | 18.66 |
| New York | 11.75 |
| North Carolina | 16.71 |
| North Dakota | 25.36 |
| Ohio | 15.73 |
| Oklahoma | 17.63 |
| Oregon | 15.44 |
| Pennsylvania | 12.30 |
| Puerto Rico | 12.47 |
| Rhode Island | 11.48 |
| South Carolina | 17.07 |
| South Dakota | 25.33 |
| Tennessee | 17.41 |
| Texas | 15.49 |
| Utah | 15.12 |
| Vermont | 20.13 |
| Virginia | 14.13 |
| Washington | 13.37 |
| West Virginia | 19.25 |
| Wisconsin | 15.94 |
| Wyoming | 25.11 |

(2) *Local switching.* (i) The blended proxy-based rate for the usage-sensitive component of the unbundled local switching element, including the switching matrix, the functionalities used to provide vertical features, and the trunk ports, shall be no greater than 0.4 cents ($0.004) per minute, and no less than 0.2 cents ($0.002) per minute, except that, where a state commission has, before August 8, 1996, established a rate less than or equal to 0.5 cents ($0.005) per minute, that rate may be retained pending completion of a forward-looking economic cost study. If a flat-rated charge is established for these components, it shall be converted to a per-minute rate by dividing the projected average minutes of use per flat-rated subelement, for purposes of assessing compliance with this proxy. A weighted average of such flat-rate or usage-sensitive charges shall be used in appropriate circumstances, such as when peak and off-peak charges are used.

(ii) The blended proxy-based rate for the line port component of the local switching element shall be no less than $1.10, and no more than $2.00, per line port per month for ports used in the delivery of basic residential and business exchange services.

(3) *Dedicated transmission links.* The proxy-based rates for dedicated transmission links shall be no greater than the incumbent LEC's tariffed interstate charges for comparable entrance facilities or direct-trunked transport offerings, as described in §§ 69.110 and 69.112 of this chapter.

(4) *Shared transmission facilities between tandem switches and end offices.* The proxy-based rates for shared transmission facilities between tandem switches and end offices shall be no greater than the weighted per-minute equivalent of DS1 and DS3 interoffice dedicated transmission link rates that reflects the relative number of DS1 and DS3 circuits used in the tandem to end office links (or a surrogate based on the proportion of copper and fiber facilities in the interoffice network), calculated using a loading factor of 9,000 minutes per month per voice-grade circuit, as described in § 69.112 of this chapter.

(5) *Tandem switching.* The proxy-based rate for tandem switching shall be no greater than 0.15 cents ($0.0015) per minute of use.

(6) *Collocation.* To the extent that the incumbent LEC offers a comparable form of collocation in its interstate expanded interconnection tariffs, as described in §§64.1401 and 69.121 of this chapter, the proxy-based rates for collocation shall be no greater than the effective rates for equivalent services in the interstate expanded interconnection tariff. To the extent that the incumbent LEC does not offer a comparable form of collocation in its interstate expanded interconnection tariffs, a state commission may, in its discretion, establish a proxy-based rate, provided that the state commission sets forth in writing a reasonable basis for concluding that its rate would approximate the result of a forward-looking economic cost study, as described in §51.505.

(7) *Signaling, call-related database, and other elements.* To the extent that the incumbent LEC has established rates for offerings comparable to other elements in its interstate access tariffs, and has provided cost support for those rates pursuant to §61.49(h) of this chapter, the proxy-based rates for those elements shall be no greater than the effective rates for equivalent services in the interstate access tariffs. In other cases, the proxy-based rate shall be no greater than a rate based on direct costs plus a reasonable allocation of overhead loadings, pursuant to §61.49(h) of this chapter.

[61 FR 45619, Aug. 29, 1996, as amended at 61 FR 52709, Oct. 8, 1996]

### §51.515 Application of access charges.

(a) Neither the interstate access charges described in part 69 of this chapter nor comparable intrastate access charges shall be assessed by an incumbent LEC on purchasers of elements that offer telephone exchange or exchange access services.

(b) Notwithstanding §§51.505, 51.511, and 51.513(d)(2) and paragraph (a) of this section, an incumbent LEC may assess upon telecommunications carriers that purchase unbundled local switching elements, as described in §51.319(c)(1), for interstate minutes of use traversing such unbundled local switching elements, the carrier common line charge described in §69.105 of this chapter, and a charge equal to 75% of the interconnection charge described in §69.124 of this chapter, only until the earliest of the following, and not thereafter:

(1) June 30, 1997;

(2) The later of the effective date of a final Commission decision in CC Docket No. 96–45, *Federal-State Joint Board on Universal Service,* or the effective date of a final Commission decision in a proceeding to consider reform of the interstate access charges described in part 69; or

(3) With respect to a Bell operating company only, the date on which that company is authorized to offer in-region interLATA service in a state pursuant to section 271 of the Act. The end date for Bell operating companies that are authorized to offer interLATA service shall apply only to the recovery of access charges in those states in which the Bell operating company is authorized to offer such service.

(c) Notwithstanding §§51.505, 51.511, and 51.513(d)(2) and paragraph (a) of this section, an incumbent LEC may assess upon telecommunications carriers that purchase unbundled local switching elements, as described in §51.319(c)(1), for intrastate toll minutes of use traversing such unbundled local switching elements, intrastate access charges comparable to those listed in paragraph (b) and any explicit intrastate universal service mechanism based on access charges, only until the earliest of the following, and not thereafter:

(1) June 30, 1997;

(2) The effective date of a state commission decision that an incumbent LEC may not assess such charges; or

(3) With respect to a Bell operating company only, the date on which that company is authorized to offer in-region interLATA service in the state pursuant to section 271 of the Act. The end date for Bell operating companies that are authorized to offer interLATA service shall apply only to the recovery of access charges in those states in which the Bell operating company is authorized to offer such service.

(d) Interstate access charges described in part 69 shall not be assessed by incumbent LECs on each element

purchased by requesting carriers providing both telephone exchange and exchange access services to such requesting carriers' end users.

[61 FR 45619, Aug. 29, 1996, as amended at 62 FR 45587, Aug. 28, 1997]

## Subpart G—Resale

### § 51.601 Scope of resale rules.

The provisions of this subpart govern the terms and conditions under which LECs offer telecommunications services to requesting telecommunications carriers for resale.

### § 51.603 Resale obligation of all local exchange carriers.

(a) A LEC shall make its telecommunications services available for resale to requesting telecommunications carriers on terms and conditions that are reasonable and non-discriminatory.

(b) A LEC must provide services to requesting telecommunications carriers for resale that are equal in quality, subject to the same conditions, and provided within the same provisioning time intervals that the LEC provides these services to others, including end users.

### § 51.605 Additional obligations of incumbent local exchange carriers.

(a) An incumbent LEC shall offer to any requesting telecommunications carrier any telecommunications service that the incumbent LEC offers on a retail basis to subscribers that are not telecommunications carriers for resale at wholesale rates that are, at the election of the state commission—

(1) Consistent with the avoided cost methodology described in §§ 51.607 and 51.609; or

(2) Interim wholesale rates, pursuant to § 51.611.

(b) For purposes of this subpart, exchange access services, as defined in section 3 of the Act, shall not be considered to be telecommunications services that incumbent LECs must make available for resale at wholesale rates to requesting telecommunications carriers.

(c) For purposes of this subpart, advanced telecommunications services sold to Internet Service Providers as an input component to the Internet Service Providers' retail Internet service offering shall not be considered to be telecommunications services offered on a retail basis that incumbent LECs must make available for resale at wholesale rates to requesting telecommunications carriers.

(d) Notwithstanding paragraph (b) of this section, advanced telecommunications services that are classified as exchange access services are subject to the obligations of paragraph (a) of this section if such services are sold on a retail basis to residential and business end-users that are not telecommunications carriers.

(e) Except as provided in § 51.613, an incumbent LEC shall not impose restrictions on the resale by a requesting carrier of telecommunications services offered by the incumbent LEC.

[61 FR 45619, Aug. 29, 1996, as amended at 65 FR 6915, Feb. 11, 2000]

### § 51.607 Wholesale pricing standard.

The wholesale rate that an incumbent LEC may charge for a telecommunications service provided for resale to other telecommunications carriers shall equal the rate for the telecommunications service, less avoided retail costs, as described in section 51.609. For purposes of this subpart, exchange access services, as defined in section 3 of the Act, shall not be considered to be telecommunications services that incumbent LECs must make available for resale at wholesale rates to requesting telecommunications carriers.

[65 FR 6915, Feb. 11, 2000]

### § 51.609 Determination of avoided retail costs.

(a) Except as provided in § 51.611, the amount of avoided retail costs shall be determined on the basis of a cost study that complies with the requirements of this section.

(b) Avoided retail costs shall be those costs that reasonably can be avoided when an incumbent LEC provides a telecommunications service for resale at wholesale rates to a requesting carrier.

(c) For incumbent LECs that are designated as Class A companies under

§32.11 of this chapter, except as provided in paragraph (d) of this section, avoided retail costs shall:

(1) Include, as direct costs, the costs recorded in USOA accounts 6611 (product management), 6612 (sales), 6613 (product advertising), 6621 (call completion services), 6622 (number services), and 6623 (customer services) (§§32.6611, 32.6612, 32.6613, 32.6621, 32.6622, and 32.6623 of this chapter);

(2) Include, as indirect costs, a portion of the costs recorded in USOA accounts 6121–6124 (general support expenses), 6711, 6712, 6721–6728 (corporate operations expenses), and 5301 (telecommunications uncollectibles) (§§32.6121–32.6124, 32.6711, 32.6712, 32.6721–32.6728, and 32.5301 of this chapter); and

(3) Not include plant-specific expenses and plant non-specific expenses, other than general support expenses (§§32.6110–32.6116, 32.6210–32.6565 of this chapter).

(d) Costs included in accounts 6611–6613 and 6621–6623 described in paragraph (c) of this section (§§32.6611–32.6613 and 32.6621–32.6623 of this chapter) may be included in wholesale rates only to the extent that the incumbent LEC proves to a state commission that specific costs in these accounts will be incurred and are not avoidable with respect to services sold at wholesale, or that specific costs in these accounts are not included in the retail prices of resold services. Costs included in accounts 6110–6116 and 6210–6565 described in paragraph (c) of this section (§§32.6110–32.6116, 32.6210–32.6565 of this chapter) may be treated as avoided retail costs, and excluded from wholesale rates, only to the extent that a party proves to a state commission that specific costs in these accounts can reasonably be avoided when an incumbent LEC provides a telecommunications service for resale to a requesting carrier.

(e) For incumbent LECs that are designated as Class B companies under §32.11 of this chapter and that record information in summary accounts instead of specific USOA accounts, the entire relevant summary accounts may be used in lieu of the specific USOA accounts listed in paragraphs (c) and (d) of this section.

### §51.611 Interim wholesale rates.

(a) If a state commission cannot, based on the information available to it, establish a wholesale rate using the methodology prescribed in §51.609, then the state commission may elect to establish an interim wholesale rate as described in paragraph (b) of this section.

(b) The state commission may establish interim wholesale rates that are at least 17 percent, and no more than 25 percent, below the incumbent LEC's existing retail rates, and shall articulate the basis for selecting a particular discount rate. The same discount percentage rate shall be used to establish interim wholesale rates for each telecommunications service.

(c) A state commission that establishes interim wholesale rates shall, within a reasonable period of time thereafter, establish wholesale rates on the basis of an avoided retail cost study that complies with §51.609.

### §51.613 Restrictions on resale.

(a) Notwithstanding §51.605(b), the following types of restrictions on resale may be imposed:

(1) *Cross-class selling.* A state commission may permit an incumbent LEC to prohibit a requesting telecommunications carrier that purchases at wholesale rates for resale, telecommunications services that the incumbent LEC makes available only to residential customers or to a limited class of residential customers, from offering such services to classes of customers that are not eligible to subscribe to such services from the incumbent LEC.

(2) *Short term promotions.* An incumbent LEC shall apply the wholesale discount to the ordinary rate for a retail service rather than a special promotional rate only if:

(i) Such promotions involve rates that will be in effect for no more than 90 days; and

(ii) The incumbent LEC does not use such promotional offerings to evade the wholesale rate obligation, for example by making available a sequential series of 90-day promotional rates.

(b) With respect to any restrictions on resale not permitted under paragraph (a), an incumbent LEC may impose a restriction only if it proves to

the state commission that the restriction is reasonable and nondiscriminatory.

(c) *Branding.* Where operator, call completion, or directory assistance service is part of the service or service package an incumbent LEC offers for resale, failure by an incumbent LEC to comply with reseller unbranding or rebranding requests shall constitute a restriction on resale.

(1) An incumbent LEC may impose such a restriction only if it proves to the state commission that the restriction is reasonable and nondiscriminatory, such as by proving to a state commission that the incumbent LEC lacks the capability to comply with unbranding or rebranding requests.

(2) For purposes of this subpart, unbranding or rebranding shall mean that operator, call completion, or directory assistance services are offered in such a manner that an incumbent LEC's brand name or other identifying information is not identified to subscribers, or that such services are offered in such a manner that identifies to subscribers the requesting carrier's brand name or other identifying information.

### § 51.615 Withdrawal of services.

When an incumbent LEC makes a telecommunications service available only to a limited group of customers that have purchased such a service in the past, the incumbent LEC must also make such a service available at wholesale rates to requesting carriers to offer on a resale basis to the same limited group of customers that have purchased such a service in the past.

### § 51.617 Assessment of end user common line charge on resellers.

(a) Notwithstanding the provision in § 69.104(a) of this chapter that the end user common line charge be assessed upon end users, an incumbent LEC shall assess this charge, and the charge for changing the designated primary interexchange carrier, upon requesting carriers that purchase telephone exchange service for resale. The specific end user common line charge to be assessed will depend upon the identity of the end user served by the requesting carrier.

(b) When an incumbent LEC provides telephone exchange service to a requesting carrier at wholesale rates for resale, the incumbent LEC shall continue to assess the interstate access charges provided in part 69 of this chapter, other than the end user common line charge, upon interexchange carriers that use the incumbent LEC's facilities to provide interstate or international telecommunications services to the interexchange carriers' subscribers.

## Subpart H—Reciprocal Compensation for Transport and Termination of Local Telecommunications Traffic

### § 51.701 Scope of transport and termination pricing rules.

(a) The provisions of this subpart apply to reciprocal compensation for transport and termination of local telecommunications traffic between LECs and other telecommunications carriers.

(b) *Local telecommunications traffic.* For purposes of this subpart, local telecommunications traffic means:

(1) Telecommunications traffic between a LEC and a telecommunications carrier other than a CMRS provider that originates and terminates within a local service area established by the state commission; or

(2) Telecommunications traffic between a LEC and a CMRS provider that, at the beginning of the call, originates and terminates within the same Major Trading Area, as defined in § 24.202(a) of this chapter.

(c) *Transport.* For purposes of this subpart, transport is the transmission and any necessary tandem switching of local telecommunications traffic subject to section 251(b)(5) of the Act from the interconnection point between the two carriers to the terminating carrier's end office switch that directly serves the called party, or equivalent facility provided by a carrier other than an incumbent LEC.

(d) *Termination.* For purposes of this subpart, termination is the switching of local telecommunications traffic at the terminating carrier's end office

switch, or equivalent facility, and delivery of such traffic to the called party's premises.

(e) *Reciprocal compensation.* For purposes of this subpart, a reciprocal compensation arrangement between two carriers is one in which each of the two carriers receives compensation from the other carrier for the transport and termination on each carrier's network facilities of local telecommunications traffic that originates on the network facilities of the other carrier.

### § 51.703 Reciprocal compensation obligation of LECs.

(a) Each LEC shall establish reciprocal compensation arrangements for transport and termination of local telecommunications traffic with any requesting telecommunications carrier.

(b) A LEC may not assess charges on any other telecommunications carrier for local telecommunications traffic that originates on the LEC's network.

### § 51.705 Incumbent LECs' rates for transport and termination.

(a) An incumbent LEC's rates for transport and termination of local telecommunications traffic shall be established, at the election of the state commission, on the basis of:

(1) The forward-looking economic costs of such offerings, using a cost study pursuant to §§ 51.505 and 51.511;

(2) Default proxies, as provided in § 51.707; or

(3) A bill-and-keep arrangement, as provided in § 51.713.

(b) In cases where both carriers in a reciprocal compensation arrangement are incumbent LECs, state commissions shall establish the rates of the smaller carrier on the basis of the larger carrier's forward-looking costs, pursuant to § 51.711.

### § 51.707 Default proxies for incumbent LECs' transport and termination rates.

(a) A state commission may determine that the cost information available to it with respect to transport and termination of local telecommunications traffic does not support the adoption of a rate or rates for an incumbent LEC that are consistent with the requirements of §§ 51.505 and 51.511. In that event, the state commission may establish rates for transport and termination of local telecommunications traffic, or for specific components included therein, that are consistent with the proxies specified in this section, provided that:

(1) Any rate established through use of such proxies is superseded once that state commission establishes rates for transport and termination pursuant to §§ 51.705(a)(1) or 51.705(a)(3); and

(2) The state commission sets forth in writing a reasonable basis for its selection of a particular proxy for transport and termination of local telecommunications traffic, or for specific components included within transport and termination.

(b) If a state commission establishes rates for transport and termination of local telecommunications traffic on the basis of default proxies, such rates must meet the following requirements:

(1) *Termination.* The incumbent LEC's rates for the termination of local telecommunications traffic shall be no greater than 0.4 cents ($0.004) per minute, and no less than 0.2 cents ($0.002) per minute, except that, if a state commission has, before August 8, 1996, established a rate less than or equal to 0.5 cents ($0.005) per minute for such calls, that rate may be retained pending completion of a forward-looking economic cost study.

(2) *Transport.* The incumbent LEC's rates for the transport of local telecommunications traffic, under this section, shall comply with the proxies described in § 51.513(c) (3), (4), and (5) of this part that apply to the analogous unbundled network elements used in transporting a call to the end office that serves the called party.

[61 FR 45619, Aug. 29, 1996, as amended at 61 FR 52709, Oct. 8, 1996]

### § 51.709 Rate structure for transport and termination.

(a) In state proceedings, a state commission shall establish rates for the transport and termination of local telecommunications traffic that are structured consistently with the manner that carriers incur those costs, and consistently with the principles in §§ 51.507 and 51.509.

(b) The rate of a carrier providing transmission facilities dedicated to the transmission of traffic between two carriers' networks shall recover only the costs of the proportion of that trunk capacity used by an interconnecting carrier to send traffic that will terminate on the providing carrier's network. Such proportions may be measured during peak periods.

### § 51.711 Symmetrical reciprocal compensation.

(a) Rates for transport and termination of local telecommunications traffic shall be symmetrical, except as provided in paragraphs (b) and (c) of this section.

(1) For purposes of this subpart, symmetrical rates are rates that a carrier other than an incumbent LEC assesses upon an incumbent LEC for transport and termination of local telecommunications traffic equal to those that the incumbent LEC assesses upon the other carrier for the same services.

(2) In cases where both parties are incumbent LECs, or neither party is an incumbent LEC, a state commission shall establish the symmetrical rates for transport and termination based on the larger carrier's forward-looking costs.

(3) Where the switch of a carrier other than an incumbent LEC serves a geographic area comparable to the area served by the incumbent LEC's tandem switch, the appropriate rate for the carrier other than an incumbent LEC is the incumbent LEC's tandem interconnection rate.

(b) A state commission may establish asymmetrical rates for transport and termination of local telecommunications traffic only if the carrier other than the incumbent LEC (or the smaller of two incumbent LECs) proves to the state commission on the basis of a cost study using the forward-looking economic cost based pricing methodology described in §§ 51.505 and 51.511, that the forward-looking costs for a network efficiently configured and operated by the carrier other than the incumbent LEC (or the smaller of two incumbent LECs), exceed the costs incurred by the incumbent LEC (or the larger incumbent LEC), and, consequently, that such that a higher rate is justified.

(c) Pending further proceedings before the Commission, a state commission shall establish the rates that licensees in the Paging and Radiotelephone Service (defined in part 22, subpart E of this chapter), Narrowband Personal Communications Services (defined in part 24, subpart D of this chapter), and Paging Operations in the Private Land Mobile Radio Services (defined in part 90, subpart P of this chapter) may assess upon other carriers for the transport and termination of local telecommunications traffic based on the forward-looking costs that such licensees incur in providing such services, pursuant to §§ 51.505 and 51.511. Such licensees' rates shall not be set based on the default proxies described in § 51.707.

### § 51.713 Bill-and-keep arrangements for reciprocal compensation.

(a) For purposes of this subpart, bill-and-keep arrangements are those in which neither of the two interconnecting carriers charges the other for the termination of local telecommunications traffic that originates on the other carrier's network.

(b) A state commission may impose bill-and-keep arrangements if the state commission determines that the amount of local telecommunications traffic from one network to the other is roughly balanced with the amount of local telecommunications traffic flowing in the opposite direction, and is expected to remain so, and no showing has been made pursuant to § 51.711(b).

(c) Nothing in this section precludes a state commission from presuming that the amount of local telecommunications traffic from one network to the other is roughly balanced with the amount of local telecommunications traffic flowing in the opposite direction and is expected to remain so, unless a party rebuts such a presumption.

### § 51.715 Interim transport and termination pricing.

(a) Upon request from a telecommunications carrier without an existing interconnection arrangement with an incumbent LEC, the incumbent

LEC shall provide transport and termination of local telecommunications traffic immediately under an interim arrangement, pending resolution of negotiation or arbitration regarding transport and termination rates and approval of such rates by a state commission under sections 251 and 252 of the Act.

(1) This requirement shall not apply when the requesting carrier has an existing interconnection arrangement that provides for the transport and termination of local telecommunications traffic by the incumbent LEC.

(2) A telecommunications carrier may take advantage of such an interim arrangement only after it has requested negotiation with the incumbent LEC pursuant to §51.301.

(b) Upon receipt of a request as described in paragraph (a) of this section, an incumbent LEC must, without unreasonable delay, establish an interim arrangement for transport and termination of local telecommunications traffic at symmetrical rates.

(1) In a state in which the state commission has established transport and termination rates based on forward-looking economic cost studies, an incumbent LEC shall use these state-determined rates as interim transport and termination rates.

(2) In a state in which the state commission has established transport and termination rates consistent with the default price ranges and ceilings described in §51.707, an incumbent LEC shall use these state-determined rates as interim rates.

(3) In a state in which the state commission has neither established transport and termination rates based on forward-looking economic cost studies nor established transport and termination rates consistent with the default price ranges described in §51.707, an incumbent LEC shall set interim transport and termination rates at the default ceilings for end-office switching (0.4 cents per minute of use), tandem switching (0.15 cents per minute of use), and transport (as described in §51.707(b)(2)).

(c) An interim arrangement shall cease to be in effect when one of the following occurs with respect to rates for transport and termination of local telecommunications traffic subject to the interim arrangement:

(1) A voluntary agreement has been negotiated and approved by a state commission;

(2) An agreement has been arbitrated and approved by a state commission; or

(3) The period for requesting arbitration has passed with no such request.

(d) If the rates for transport and termination of local telecommunications traffic in an interim arrangement differ from the rates established by a state commission pursuant to §51.705, the state commission shall require carriers to make adjustments to past compensation. Such adjustments to past compensation shall allow each carrier to receive the level of compensation it would have received had the rates in the interim arrangement equalled the rates later established by the state commission pursuant to §51.705.

### §51.717 Renegotiation of existing non-reciprocal arrangements.

(a) Any CMRS provider that operates under an arrangement with an incumbent LEC that was established before August 8, 1996 and that provides for non-reciprocal compensation for transport and termination of local telecommunications traffic is entitled to renegotiate these arrangements with no termination liability or other contract penalties.

(b) From the date that a CMRS provider makes a request under paragraph (a) of this section until a new agreement has been either arbitrated or negotiated and has been approved by a state commission, the CMRS provider shall be entitled to assess upon the incumbent LEC the same rates for the transport and termination of local telecommunications traffic that the incumbent LEC assesses upon the CMRS provider pursuant to the pre-existing arrangement.

## Subpart I—Procedures for Implementation of Section 252 of the Act

### § 51.801 Commission action upon a state commission's failure to act to carry out its responsibility under section 252 of the Act.

(a) If a state commission fails to act to carry out its responsibility under section 252 of the Act in any proceeding or other matter under section 252 of the Act, the Commission shall issue an order preempting the state commission's jurisdiction of that proceeding or matter within 90 days after being notified (or taking notice) of such failure, and shall assume the responsibility of the state commission under section 252 of the Act with respect to the proceeding or matter and shall act for the state commission.

(b) For purposes of this part, a state commission fails to act if the state commission fails to respond, within a reasonable time, to a request for mediation, as provided for in section 252(a)(2) of the Act, or for a request for arbitration, as provided for in section 252(b) of the Act, or fails to complete an arbitration within the time limits established in section 252(b)(4)(C) of the Act.

(c) A state shall not be deemed to have failed to act for purposes of section 252(e)(5) of the Act if an agreement is deemed approved under section 252(e)(4) of the Act.

### § 51.803 Procedures for Commission notification of a state commission's failure to act.

(a) Any party seeking preemption of a state commission's jurisdiction, based on the state commission's failure to act, shall notify the Commission in accordance with following procedures:

(1) Such party shall file with the Secretary of the Commission a petition, supported by an affidavit, that states with specificity the basis for the petition and any information that supports the claim that the state has failed to act, including, but not limited to, the applicable provisions of the Act and the factual circumstances supporting a finding that the state commission has failed to act;

(2) Such party shall ensure that the state commission and the other parties to the proceeding or matter for which preemption is sought are served with the petition required in paragraph (a)(1) of this section on the same date that the petitioning party serves the petition on the Commission; and

(3) Within fifteen days from the date of service of the petition required in paragraph (a)(1) of this section, the applicable state commission and parties to the proceeding may file with the Commission a response to the petition.

(b) The party seeking preemption must prove that the state has failed to act to carry out its responsibilities under section 252 of the Act.

(c) The Commission, pursuant to section 252(e)(5) of the Act, may take notice upon its own motion that a state commission has failed to act. In such a case, the Commission shall issue a public notice that the Commission has taken notice of a state commission's failure to act. The applicable state commission and the parties to a proceeding or matter in which the Commission has taken notice of the state commission's failure to act may file, within fifteen days of the issuance of the public notice, comments on whether the Commission is required to assume the responsibility of the state commission under section 252 of the Act with respect to the proceeding or matter.

(d) The Commission shall issue an order determining whether it is required to preempt the state commission's jurisdiction of a proceeding or matter within 90 days after being notified under paragraph (a) of this section or taking notice under paragraph (c) of this section of a state commission's failure to carry out its responsibilities under section 252 of the Act.

### § 51.805 The Commission's authority over proceedings and matters.

(a) If the Commission assumes responsibility for a proceeding or matter pursuant to section 252(e)(5) of the Act, the Commission shall retain jurisdiction over such proceeding or matter. At a minimum, the Commission shall approve or reject any interconnection agreement adopted by negotiation, mediation or arbitration for which the

Commission, pursuant to section 252(e)(5) of the Act, has assumed the state's commission's responsibilities.

(b) Agreements reached pursuant to mediation or arbitration by the Commission pursuant to section 252(e)(5) of the Act are not required to be submitted to the state commission for approval or rejection.

**§ 51.807 Arbitration and mediation of agreements by the Commission pursuant to section 252(e)(5) of the Act.**

(a) The rules established in this section shall apply only to instances in which the Commission assumes jurisdiction under section 252(e)(5) of the Act.

(b) When the Commission assumes responsibility for a proceeding or matter pursuant to section 252(e)(5) of the Act, it shall not be bound by state laws and standards that would have applied to the state commission in such proceeding or matter.

(c) In resolving, by arbitration under section 252(b) of the Act, any open issues and in imposing conditions upon the parties to the agreement, the Commission shall:

(1) Ensure that such resolution and conditions meet the requirements of section 251 of the Act, including the rules prescribed by the Commission pursuant to that section;

(2) Establish any rates for interconnection, services, or network elements according to section 252(d) of the Act, including the rules prescribed by the Commission pursuant to that section; and

(3) Provide a schedule for implementation of the terms and conditions by the parties to the agreement.

(d) An arbitrator, acting pursuant to the Commission's authority under section 252(e)(5) of the Act, shall use final offer arbitration, except as otherwise provided in this section:

(1) At the discretion of the arbitrator, final offer arbitration may take the form of either entire package final offer arbitration or issue-by-issue final offer arbitration.

(2) Negotiations among the parties may continue, with or without the assistance of the arbitrator, after final arbitration offers are submitted. Parties may submit subsequent final offers following such negotiations.

(3) To provide an opportunity for final post-offer negotiations, the arbitrator will not issue a decision for at least fifteen days after submission to the arbitrator of the final offers by the parties.

(e) Final offers submitted by the parties to the arbitrator shall be consistent with section 251 of the Act, including the rules prescribed by the Commission pursuant to that section.

(f) Each final offer shall:

(1) Meet the requirements of section 251, including the rules prescribed by the Commission pursuant to that section;

(2) Establish rates for interconnection, services, or access to unbundled network elements according to section 252(d) of the Act, including the rules prescribed by the Commission pursuant to that section; and

(3) Provide a schedule for implementation of the terms and conditions by the parties to the agreement. If a final offer submitted by one or more parties fails to comply with the requirements of this section, the arbitrator has discretion to take steps designed to result in an arbitrated agreement that satisfies the requirements of section 252(c) of the Act, including requiring parties to submit new final offers within a time frame specified by the arbitrator, or adopting a result not submitted by any party that is consistent with the requirements of section 252(c) of the Act, and the rules prescribed by the Commission pursuant to that section.

(g) Participation in the arbitration proceeding will be limited to the requesting telecommunications carrier and the incumbent LEC, except that the Commission will consider requests by third parties to file written pleadings.

(h) Absent mutual consent of the parties to change any terms and conditions adopted by the arbitrator, the decision of the arbitrator shall be binding on the parties.

**§ 51.809 Availability of provisions of agreements to other telecommunications carriers under section 252(i) of the Act.**

(a) An incumbent LEC shall make available without unreasonable delay to any requesting telecommunications carrier any individual interconnection, service, or network element arrangement contained in any agreement to which it is a party that is approved by a state commission pursuant to section 252 of the Act, upon the same rates, terms, and conditions as those provided in the agreement. An incumbent LEC may not limit the availability of any individual interconnection, service, or network element only to those requesting carriers serving a comparable class of subscribers or providing the same service (*i.e.*, local, access, or interexchange) as the original party to the agreement.

(b) The obligations of paragraph (a) of this section shall not apply where the incumbent LEC proves to the state commission that:

(1) The costs of providing a particular interconnection, service, or element to the requesting telecommunications carrier are greater than the costs of providing it to the telecommunications carrier that originally negotiated the agreement, or

(2) The provision of a particular interconnection, service, or element to the requesting carrier is not technically feasible.

(c) Individual interconnection, service, or network element arrangements shall remain available for use by telecommunications carriers pursuant to this section for a reasonable period of time after the approved agreement is available for public inspection under section 252(f) of the Act.

# PART 52—NUMBERING

## Subpart A—Scope and Authority

Sec.
52.1 Basis and purpose.
52.3 General.
52.5 Definitions.

## Subpart B—Administration

52.7 Definitions.
52.9 General requirements.
52.11 North American Numbering Council.
52.12 North American Numbering Plan Administrator and B&C Agent.
52.13 North American Numbering Plan Administrator.
52.15 Central office code administration.
52.16 Billing and Collection Agent.
52.17 Costs of number administration.
52.19 Area code relief.

## Subpart C—Number Portability

52.20 Thousands-block number pooling.
52.21 Definitions.
52.23 Deployment of long-term database methods for number portability by LECs.
52.25 Database architecture and administration.
52.26 NANC Recommendations on Local Number Portability Administration.
52.27 Deployment of transitional measures for number portability.
52.29 Cost recovery for transitional measures for number portability.
52.31 Deployment of long-term database methods for number portability by CMRS providers.
52.32 Allocation of the shared costs of long-term number portability.
52.33 Recovery of carrier-specific costs directly related to providing long-term number portability.
52.34–52.99 [Reserved]

## Subpart D—Toll Free Numbers

52.101 General definitions.
52.103 Lag times.
52.105 Warehousing.
52.107 Hoarding.
52.109 Permanent cap on number reservations.

APPENDIX TO PART 52—DEPLOYMENT SCHEDULE FOR LONG-TERM DATABASE METHODS FOR LOCAL NUMBER PORTABILITY

AUTHORITY: Sec. 1, 2, 4, 5, 48 Stat. 1066, as amended; 47 U.S.C. § 151, 152, 154, 155 unless otherwise noted. Interpret or apply secs. 3, 4, 201–05, 207–09, 218, 225–7, 251–2, 271 and 332, 48 Stat. 1070, as amended, 1077; 47 U.S.C. 153, 154, 201–05, 207–09, 218, 225–7, 251–2, 271 and 332 unless otherwise noted.

SOURCE: 61 FR 38637, July 25, 1996, unless otherwise noted.

## Subpart A—Scope and Authority

SOURCE: 61 FR 47353, Sept. 6, 1996, unless otherwise noted.

**§ 52.1 Basis and purpose.**

(a) *Basis.* These rules are issued pursuant to the Communications Act of 1934, as amended, 47 U.S.C. 151 *et. seq.*

(b) *Purpose.* The purpose of these rules is to establish, for the United States, requirements and conditions for the administration and use of telecommunications numbers for provision of telecommunications services.

### §52.3 General.

The Commission shall have exclusive authority over those portions of the North American Numbering Plan (NANP) that pertain to the United States. The Commission may delegate to the States or other entities any portion of such jurisdiction.

### §52.5 Definitions.

As used in this part:

(a) *Incumbent local exchange carrier.* With respect to an area, an ''incumbent local exchange carrier'' is a local exchange carrier that:

(1) On February 8, 1996, provided telephone exchange service in such area; and

(2)(i) On February 8, 1996, was deemed to be a member of the exchange carrier association pursuant to §69.601(b) of this chapter (47 CFR 69.601(b)); or

(ii) Is a person or entity that, on or after February 8, 1996, became a successor or assign of a member described in paragraph (a)(2)(i) of this section.

(b) *North American Numbering Council* (NANC). The ''North American Numbering Council'' is an advisory committee created under the Federal Advisory Committee Act, 5 U.S.C., App (1988), to advise the Commission and to make recommendations, reached through consensus, that foster efficient and impartial number administration.

(c) *North American Numbering Plan* (NANP). The ''North American Numbering Plan'' is the basic numbering scheme for the telecommunications networks located in Anguilla, Antigua, Bahamas, Barbados, Bermuda, British Virgin Islands, Canada, Cayman Islands, Dominica, Dominican Republic, Grenada, Jamaica, Montserrat, St. Kitts & Nevis, St. Lucia, St. Vincent, Turks & Caicos Islands, Trinidad & Tobago, and the United States (including Puerto Rico, the U.S. Virgin Islands, Guam and the Commonwealth of the Northern Mariana Islands).

(d) *State.* The term ''state'' includes the District of Columbia and the Territories and possessions.

(e) *State commission.* The term ''state commission'' means the commission, board, or official (by whatever name designated) which under the laws of any state has regulatory jurisdiction with respect to intrastate operations of carriers.

(f) *Telecommunications.* ''Telecommunications'' means the transmission, between or among points specified by the user, of information of the user's choosing, without change in the form or content of the information as sent and received.

(g) *Telecommunications carrier.* A ''telecommunications carrier'' is any provider of telecommunications services, except that such term does not include aggregators of telecommunications services (as defined in 47 U.S.C. 226(a)(2)).

(h) *Telecommunications service.* The term ''telecommunications service'' refers to the offering of telecommunications for a fee directly to the public, or to such classes of users as to be effectively available directly to the public, regardless of the facilities used.

(i) *Service provider.* The term ''service provider'' refers to a telecommunications carrier or other entity that receives numbering resources from the NANPA, a Pooling Administrator or a telecommunications carrier for the purpose of providing or establishing telecommunications service.

[61 FR 47353, Sept. 6, 1996, as amended at 65 FR 37707, June 16, 2000]

## Subpart B—Administration

SOURCE: 61 FR 47353, Sept. 6, 1996, unless otherwise noted.

### §52.7 Definitions.

As used in this subpart:

(a) *Area code or numbering plan area* (NPA). The term ''area code or numbering plan area'' refers to the first three digits (NXX) of a ten-digit telephone number in the form NXX–NXX–XXXX, where N represents any one of the numbers 2 through 9 and X represents any one of the numbers 0 through 9.

(b) *Area code relief.* The term ''area code relief'' refers to the process by which central office codes are made available when there are few or no unassigned central office codes remaining in an existing area code and a new area code is introduced. Area code relief includes planning for area code ''jeopardy,'' which is a situation where central office codes may become exhausted before an area code relief plan can be implemented.

(c) *Central office (CO) code.* The term ''central office code'' refers to the second three digits (NXX) of a ten-digit telephone number in the form NXX–NXX–XXXX, where N represents any one of the numbers 2 through 9 and X represents any one of the numbers 0 through 9.

(d) *Central office (CO) code administrator.* The term ''central office code administrator'' refers to the entity or entities responsible for managing central office codes in each area code.

(e) *North American Numbering Plan Administrator* (NANPA). The term ''North American Numbering Plan Administrator'' refers to the entity or entities responsible for managing the NANP.

(f) *Billing and Collection Agent.* The term ''Billing & Collection Agent'' (''B&C Agent'') refers to the entity responsible for the collection of funds to support numbering administration for telecommunications services from the United States telecommunications industry and NANP member countries.

(g) *Pooling Administrator (PA).* The term ''Pooling Administrator'' refers to the entity or entities responsible for administering a thousands-block number pool.

(h) *Contamination.* Contamination occurs when at least one telephone number within a block of telephone numbers is not available for assignment to end users or customers. For purposes of this provision, a telephone number is ''not available for assignment'' if it is classified as administrative, aging, assigned, intermediate, or reserved as defined in § 52.15(f)(1).

(i) *Donation.* The term ''donation'' refers to the process by which carriers are required to contribute telephone numbers to a thousands-block number pool.

(j) *Inventory.* The term ''inventory'' refers to all telephone numbers distributed, assigned or allocated:

(1) To a service provider; or

(2) To a pooling administrator for the purpose of establishing or maintaining a thousands-block number pool.

[61 FR 47353, Sept. 6, 1996, as amended at 62 FR 55180, Oct. 23, 1997; 65 FR 37707, June 16, 2000]

### § 52.9 General requirements.

(a) To ensure that telecommunications numbers are made available on an equitable basis, the administration of telecommunications numbers shall, in addition to the specific requirements set forth in this subpart:

(1) Facilitate entry into the telecommunications marketplace by making telecommunications numbering resources available on an efficient, timely basis to telecommunications carriers;

(2) Not unduly favor or disfavor any particular telecommunications industry segment or group of telecommunications consumers; and

(3) Not unduly favor one telecommunications technology over another.

(b) If the Commission delegates any telecommunications numbering administration functions to any State or other entity pursuant to 47 U.S.C. 251(e)(1), such State or entity shall perform these functions in a manner consistent with this part.

### § 52.11 North American Numbering Council.

The duties of the North American Numbering Council (NANC), may include, but are not limited to:

(a) Advising the Commission on policy matters relating to the administration of the NANP in the United States;

(b) Making recommendations, reached through consensus, that foster efficient and impartial number administration;

(c) Initially resolving disputes, through consensus, that foster efficient and impartial number administration in the United States by adopting and utilizing dispute resolution procedures that provide disputants, regulators, and the public notice of the matters at issue, a reasonable opportunity to

make oral and written presentations, a reasoned recommended solution, and a written report summarizing the recommendation and the reasons therefore;

(d) Recommending to the Commission an appropriate entity to serve as the NANPA;

(e) Recommending to the Commission an appropriate mechanism for recovering the costs of NANP administration in the United States, consistent with §52.17;

(f) Carrying out the duties described in §52.25; and

(g) Carrying out this part as directed by the Commission;

(h) Monitoring the performance of the NANPA and the B&C Agent on at least an annual basis; and

(i) Implementing, at the direction of the Commission, any action necessary to correct identified problems with the performance of the NANPA and the B&C Agent, as deemed necessary.

[61 FR 47353, Sept. 6, 1996, as amended at 62 FR 55180, Oct. 23, 1997]

### §52.12 North American Numbering Plan Administrator and B&C Agent.

The North American Numbering Plan Administrator (''NANPA'') and the associated ''B&C Agent'' will conduct their respective operations in accordance with this section. The NANPA and the B&C Agent will conduct their respective operations with oversight from the Federal Communications Commission (the ''Commission'') and with recommendations from the North American Numbering Council (''NANC'').

(a)(1) *Neutrality*. The NANPA and the B&C Agent shall be non-governmental entities that are impartial and not aligned with any particular telecommunication industry segment. Accordingly, while conducting their respective operations under this section, the NANPA and B&C Agent shall ensure that they comply with the following neutrality criteria:

(i) The NANPA and B&C Agent may not be an affiliate of any telecommunications service provider(s) as defined in the Telecommunications Act of 1996. ''Affiliate'' is a person who controls, is controlled by, or is under the direct or indirect common control with another person. A person shall be deemed to control another if such person possesses, directly or indirectly—

(A) An equity interest by stock, partnership (general or limited) interest, joint venture participation, or member interest in the other person ten (10%) percent or more of the total outstanding equity interests in the other person, or

(B) The power to vote ten (10%) percent or more of the securities (by stock, partnership (general or limited) interest, joint venture participation, or member interest) having ordinary voting power for the election of directors, general partner, or management of such other person, or

(C) The power to direct or cause the direction of the management and policies of such other person, whether through the ownership of or right to vote voting rights attributable to the stock, partnership (general or limited) interest, joint venture participation, or member interest) of such other person, by contract (including but not limited to stockholder agreement, partnership (general or limited) agreement, joint venture agreement, or operating agreement), or otherwise;

(ii) The NANPA and B&C Agent, and any affiliate thereof, may not issue a majority of its debt to, nor may it derive a majority of its revenues from, any telecommunications service provider. ''Majority'' shall mean greater than 50 percent, and ''debt'' shall mean stocks, bonds, securities, notes, loans or any other instrument of indebtedness; and

(iii) Notwithstanding the neutrality criteria set forth in paragraphs (a)(1)(i) and (ii) of this section, the NANPA and B&C Agent may be determined to be or not to be subject to undue influence by parties with a vested interest in the outcome of numbering administration and activities. NANC may conduct an evaluation to determine whether the NANPA and B&C Agent meet the undue influence criterion.

(2) Any subcontractor that performs—

(i) NANP administration and central office code administration, or

(ii) Billing and Collection functions, for the NANPA or for the B&C Agent

must also meet the neutrality criteria described in paragraph (a)(1).

(b) *Term of administration.* The NANPA shall provide numbering administration, including central office code administration, for the United States portion of the North American Numbering Plan (''NANP'') for an initial period of five (5) years. At any time prior to the termination of the initial or subsequent term of administration, such term may be renewed for up to five (5) years with the approval of the Commission and the agreement of the NANPA. The B&C Agent shall provide billing and collection functions for an initial period of five (5) years. At any time prior to the termination of the initial or subsequent term of administration, such term may be renewed for up to five (5) years with the approval of the Commission and the agreement of the B&C Agent.

(c) *Changes to regulations, rules, guidelines or directives.* In the event that regulatory authorities or industry groups (including, for example, the Industry Numbering Committee—INC, or its successor) issue rules, requirements, guidelines or policy directives which may affect the functions performed by the NANPA and the B&C Agent, the NANPA and the B&C Agent shall, within 10 business days from the date of official notice of such rules, requirements, guidelines or policy directives, assess the impact on its operations and advise the Commission of any changes required. NANPA and the B&C Agent shall provide written explanation why such changes are required. To the extent the Commission deems such changes are necessary, the Commission will recommend to the NANP member countries appropriate cost recovery adjustments, if necessary.

(d) *Performance review process.* NANPA and the B&C Agent shall develop and implement an internal, documented performance monitoring mechanism and shall provide such performance review on request of the Commission on at least an annual basis. The annual assessment process will not preclude telecommunications industry participants from identifying performance problems to the NANPA, the B&C Agent and the NANC as they occur, and from seeking expeditious resolution. If performance problems are identified by a telecommunications industry participant, the NANC, B&C Agent or NANPA shall investigate and report within 10 business days of notice to the participant of corrective action, if any, taken or to be taken. The NANPA, B&C Agent or NANC (as appropriate) shall be permitted reasonable time to take corrective action, including the necessity of obtaining the required consent of the Commission.

(e) *Termination.* If the Commission determines at any time that the NANPA or the B&C Agent fails to comply with the neutrality criteria set forth in paragraph (a) of this section or substantially or materially defaults in the performance of its obligations, the Commission shall advise immediately the NANPA or the B&C Agent of said failure or default, request immediate corrective action, and permit the NANPA or B&C Agent reasonable time to correct such failure or default. If the NANPA or B&C Agent is unwilling or unable to take corrective action, the Commission may, in a manner consistent with the requirements of the Administrative Procedure Act and the Communications Act of 1934, as amended, take any action that it deems appropriate, including termination of the NANPA's or B&C Agent's term of administration.

(f) *Required and optional enterprise services.* Enterprise Services, which are services beyond those described in § 52.13 that may be provided by the new NANPA for specified fees, may be offered with prior approval of the Commission.

(1) *Required Enterprise Services.* At the request of a code holder, the NANPA shall, in accordance with industry standards and for reasonable fees, enter certain routing and rating information, into the industry-approved database(s) for dissemination of such information. This task shall include reviewing the information and assisting in its preparation.

(2) *Optional Enterprise Services.* The NANPA may, subject to prior approval and for reasonable fees, offer ''Optional Enterprise Services'' which are any services not described elsewhere in this section.

(3) *Annual report.* NANPA shall identify and record all direct costs associated with providing Enterprise Services separately from the costs associated with the non-enterprise NANPA functions. The NANPA shall submit an annual report to the NANC summarizing the revenues and costs for providing each Enterprise Service. NANPA shall be audited by an independent auditor after the first year of operations and every two years thereafter, and submit the report to the Commission for appropriate review and action.

[63 FR 55180, Oct. 23, 1997]

### §52.13 North American Numbering Plan Administrator.

(a) The North American Numbering Plan Administrator (NANPA) shall be an independent and impartial non-government entity.

(b) The NANPA shall administer the numbering resources identified in paragraph (d) of this section. It shall assign and administer NANP resources in an efficient, effective, fair, unbiased, and non-discriminatory manner consistent with industry-developed guidelines and Commission regulations. It shall support the industry's efforts to accommodate current and future numbering needs. It shall perform additional functions, including but not limited to:

(1) Ensuring the efficient and effective administration and assignment of numbering resources by performing day-to-day number resource assignment and administrative activities;

(2) Planning for the long-term need for NANP resources to ensure the continued viability of the NANP by implementing a plan for number resource administration that uses effective forecasting and management skills in order to make the industry aware of the availability of numbering resources and to meet the current and future needs of the industry;

(3) Complying with guidelines of the North American Industry Numbering Committee (INC) or its successor, related industry documentation, Commission regulations and orders, and the guidelines of other appropriate policy-making authorities, all of which may be modified by industry fora or other appropriate authority;

(4) Providing management supervision for all of the services it provides, including responsibility for achieving performance measures established by the NANC and the INC in industry guidelines;

(5) Participating in the NANC annual performance review as described in §§52.11 and 52.12;

(6) Establishing and maintaining relationships with current governmental and regulatory bodies, and their successors, including the United States Federal Communications Commission, Industry Canada, the Canadian Radio-television and Telecommunications Commission, and other United States, Canadian, and Caribbean numbering authorities and regulatory agencies, and addressing policy directives from these bodies;

(7) Cooperating with and actively participating in numbering standards bodies and industry fora, such as INC and, upon request, the Canadian Steering Committee on Numbering (CSCN);

(8) Representing the NANP to national and international numbering bodies;

(9) Developing and maintaining communications channels with other countries who also participate in the NANP to ensure that numbering needs of all countries served by the NANP are met;

(10) Attending United States Study Group A meetings and maintaining a working knowledge of Study Group 2 International Telecommunications Union activities on behalf of the United States telecommunications industry;

(11) Reviewing requests for all numbering resources to implement new applications and services and making assignments in accordance with industry-developed resource planning and assignment guidelines;

(12) Referring requests for particular numbering resources to the appropriate industry body where guidelines do not exist for those resources;

(13) Participating in industry activities to determine whether, when new telecommunications services requiring numbers are proposed, NANP numbers are appropriate and what level of resource is required (e.g. line numbers, central office codes, NPA codes);

(14) Maintaining necessary administrative staff to handle the legal, financial, technical, staffing, industry, and regulatory issues relevant to the management of all numbering resources, as well as maintaining the necessary equipment, facilities, and proper billing arrangements associated with day-to-day management of all numbering resources;

(15) Managing the NANP in accordance with published guidelines adopted in conjunction with the industry and the appropriate NANP member countries' governing agencies, and referring issues to the appropriate industry body for resolution when they have not been addressed by the industry;

(16) Responding to requests from the industry and from regulators for information about the NANP and its administration, as the primary repository for numbering information in the industry;

(17) Providing upon request information regarding how to obtain current documents related to NANP administration;

(18) Providing assistance to users of numbering resources and suggesting numbering administration options, when possible, that will optimize number resource utilization;

(19) Coordinating its numbering resource activities with the Canadian Number Administrator and other NANP member countries' administrators to ensure efficient and effective management of NANP numbering resources; and

(20) Determining the final allocation methodology for sharing costs between NANP countries.

(c) In performing the functions outlined in paragraph (b) of this section, the NANPA shall:

(1) Ensure that the interests of all NANP member countries are considered;

(2) Assess fairly requests for assignments of NANP numbering resources and ensure the assignment of numbering resources to appropriate service providers;

(3) Develop, operate and maintain the computer hardware, software (database) and mechanized systems required to perform the NANPA and central office (CO) Code Administration functions;

(4) Manage projects such as Numbering Plan Area (NPA) relief (area code relief) planning and the Central Office Code Utilization Survey (COCUS);

(5) Facilitate NPA relief planning meetings;

(6) Participate in appropriate industry activities;

(7) Manage proprietary data and competitively sensitive information and maintain the confidentiality thereof;

(8) Act as an information resource for the industry concerning all aspects of numbering (i.e., knowledge and experience in numbering resource issues, International Telecommunications Union (ITU) Recommendation E.164, the North American Numbering Plan (NANP), NANP Administration, INC, NANP area country regulatory issues affecting numbering, number resource assignment guidelines, central office code administration, relief planning, international numbering issues, etc.); and

(9) Ensure that any action taken with respect to number administration is consistent with this part.

(d) The NANPA and, to the extent applicable, the B&C Agent, shall administer numbering resources in an efficient and non-discriminatory manner, in accordance with Commission rules and regulations and the guidelines developed by the INC and other industry groups pertaining to administration and assignment of numbering resources, including, but not limited to:

(1) Numbering Plan Area (NPA) codes,

(2) Central Office codes for the 809 area,

(3) International Inbound NPA 456 NXX codes,

(4) (NPA) 500 NXX codes,

(5) (NPA) 900 NXX codes,

(6) N11 Service codes,

(7) 855–XXXX line numbers,

(8) 555–XXXX line numbers,

(9) Carrier Identification Codes,

(10) Vertical Service Codes,

(11) ANI Information Integer (II) Digit Pairs,

(12) Non Dialable Toll Points, and

(13) New numbering resources as may be defined.

(e) *Relationships with other NANP member countries' administrators and authorities.* The NANPA shall address policy directives from other NANP member countries' governmental and regulatory authorities and coordinate its activities with other NANP member countries' administrators, if any, to ensure efficient and effective management of NANP resources.

(f) *Transition plan.* The NANPA shall implement a transition plan, subject to Commission approval, leading to its assumption of NANPA functions within 90 days of the effective date of a Commission order announcing the selection of the NANPA.

(g) *Transfer of intellectual property.* The new NANPA must make available any and all intellectual property and associated hardware resulting from its activities as numbering administrator including, but not limited to, systems and the data contained therein, software, interface specifications and supporting documentation and make such property available to whomever NANC directs free of charge. The new NANPA must specify any intellectual property it proposes to exclude from the provisions of this paragraph based on the existence of such property prior to its selection as NANPA.

[61 FR 47353, Sept. 6, 1996, as amended at 62 FR 55181, Oct. 23, 1997]

### §52.15 Central office code administration.

(a) Central Office Code Administration shall be performed by the NANPA, or another entity or entities, as designated by the Commission.

(b) Duties of the entity or entities performing central office code administration may include, but are not limited to:

(1) Processing central office code assignment applications and assigning such codes in a manner that is consistent with this part;

(2) Accessing and maintaining central office code assignment databases;

(3) Contributing to the CO Code Use Survey (COCUS), an annual survey that describes the present and projected use of CO codes for each NPA in the NANP;

(4) Monitoring the use of central office codes within each area code and forecasting the date by which all central office codes within that area code will be assigned; and

(5) Planning for and initiating area code relief, consistent with §52.19.

(c) Any telecommunications carrier performing central office code administration:

(1) Shall not charge fees for the assignment or use of central office codes to other telecommunications carriers, including paging and CMRS providers, unless the telecommunications carrier assigning the central office code charges one uniform fee for all carriers, including itself and its affiliates; and

(2) Shall, consistent with this subpart, apply identical standards and procedures for processing all central office code assignment requests, and for assigning such codes, regardless of the identity of the telecommunications carrier making the request.

(d) *Central Office (CO) Code Administration functional requirements.* The NANPA shall manage the United States CO code numbering resource, including CO code request processing, NPA code relief and jeopardy planning, and industry notification functions. The NANPA shall perform its CO Code Administration functions in accordance with the published industry numbering resource administration guidelines and Commission orders and regulations at 47 CFR chapter I. Subject to the approval of the Commission, the NANPA shall develop a transition plan to transfer CO code assignment from the current administrators to itself and shall submit this plan to the Commission within 90 days of the effective date of a Commission order announcing the selection of the NANPA. The NANPA shall complete the transfer of CO code assignment functions from existing administrators to itself no more than 18 months after the NANPA has assumed all of said administrators' current NANPA function.

(e) The new NANPA shall perform the numbering administration functions currently performed by Bellcore, and the CO code administration functions currently performed by the eleven CO code administrators, at the price agreed to at the time of its selection. The new NANPA may request from

NANC, with subsequent approval by the Commission, an adjustment in this price if the actual number of CO Code assignments made per year, the number of NPAs requiring relief per year or the number of NPA relief meetings per NPA exceeds 120% of the NANPA's stated assumptions for the tasks at the time of its selection.

(f) *Mandatory reporting requirements*—(1) *Number use categories.* Numbering resources must be classified in one of the following categories:

(i) *Administrative numbers* are numbers used by telecommunications carriers to perform internal administrative or operational functions necessary to maintain reasonable quality of service standards.

(ii) *Aging numbers* are disconnected numbers that are not available for assignment to another end user or customer for a specified period of time. Numbers previously assigned to residential customers may be aged for no more than 90 days. Numbers previously assigned to business customers may be aged for no more than 360 days.

(iii) *Assigned numbers* are numbers working in the Public Switched Telephone Network under an agreement such as a contract or tariff at the request of specific end users or customers for their use, or numbers not yet working but having a customer service order pending. Numbers that are not yet working and have a service order pending for more than five days shall not be classified as assigned numbers.

(iv) *Available numbers* are numbers that are available for assignment to subscriber access lines, or their equivalents, within a switching entity or point of interconnection and are not classified as assigned, intermediate, administrative, aging, or reserved.

(v) *Intermediate numbers* are numbers that are made available for use by another telecommunications carrier or non-carrier entity for the purpose of providing telecommunications service to an end user or customer. Numbers ported for the purpose of transferring an established customer's service to another service provider shall not be classified as intermediate numbers.

(vi) *Reserved numbers* are numbers that are held by service providers at the request of specific end users or customers for their future use. Numbers held for specific end users or customers for more than 45 days shall not be classified as reserved numbers.

(2) *Reporting carrier.* The term ''reporting carrier'' refers to a telecommunications carrier that receives numbering resources from the NANPA, a Pooling Administrator or another telecommunications carrier.

(3) *Data collection procedures.* (i) Reporting carriers shall report utilization and forecast data to the NANPA.

(ii) Reporting shall be by separate legal entity and must include company name, company headquarters address, OCN, parent company OCN(s), and the primary type of business for which the numbers are being used.

(iii) All data shall be filed electronically in a format approved by the Common Carrier Bureau.

(4) *Forecast data reporting.* (i) Reporting carriers shall submit to the NANPA a five-year forecast of their yearly numbering resource requirements.

(ii) In areas where thousands-block number pooling has been implemented:

(A) Reporting carriers that are required to participate in thousands-block number pooling shall report forecast data at the thousands-block (NXX–X) level per rate center;

(B) Reporting carriers that are not required to participate in thousands-block number pooling shall report forecast data at the central office code (NXX) level per rate center.

(iii) In areas where thousands-block number pooling has not been implemented, reporting carriers shall report forecast data at the central office code (NXX) level per NPA.

(iv) Reporting carriers shall identify and report separately initial numbering resources and growth numbering resources.

(5) *Utilization data reporting.* (i) Reporting carriers shall submit to the NANPA a utilization report of their current inventory of numbering resources. The report shall classify numbering resources in the following number use categories: *assigned, intermediate, reserved, aging,* and *administrative.*

(ii) Rural telephone companies, as defined in the Communications Act of

1934, as amended, 47 U.S.C. 153(37), that provide telecommunications service in areas where local number portability has not been implemented shall report utilization data at the central office code (NXX) level per rate center in those areas.

(iii) All other reporting carriers shall report utilization data at the thousands-block (NXX–X) level per rate center.

(6) *Reporting frequency.* (i) Reporting carriers shall file forecast and utilization reports semi-annually on or before February 1 for the preceding reporting period ending on December 31, and on or before August 1 for the preceding reporting period ending on June 30. Mandatory reporting shall commence August 1, 2000.

(ii) State commissions may reduce the reporting frequency for NPAs in their states to annual. Reporting carriers operating in such NPAs shall file forecast and utilization reports annually on or before August 1 for the preceding reporting period ending on June 30, commencing August 1, 2000.

(iii) A state commission seeking to reduce the reporting frequency pursuant to paragraph (f) (6)(ii) of this section shall notify the Common Carrier Bureau and the NANPA in writing prior to reducing the reporting frequency.

(7) *Access to data and confidentiality*—States shall have access to data reported to the NANPA provided that they have appropriate protections in place to prevent public disclosure of disaggregated, carrier-specific data.

(g) *Applications for numbering resources*—(1) *General requirements.* All applications for numbering resources must include the company name, company headquarters address, OCN, parent company's OCN(s), and the primary type of business in which the numbering resources will be used.

(2) *Initial numbering resources.* Applications for initial numbering resources shall include evidence that:

(i) The applicant is authorized to provide service in the area for which the numbering resources are being requested; and

(ii) The applicant is or will be capable of providing service within sixty (60) days of the numbering resources activation date.

(3) *Growth numbering resources.* (i) Applications for growth numbering resources shall include:

(A) A Months-to-Exhaust Worksheet that provides utilization by rate center for the preceding six months and projected monthly utilization for the next twelve (12) months; and

(B) The applicant's current numbering resource utilization level for the rate center in which it is seeking growth numbering resources.

(ii) The numbering resource utilization level shall be calculated by dividing all *assigned numbers* by the total numbering resources in the applicant's inventory and multiplying the result by 100. Numbering resources activated in the Local Exchange Routing Guide (LERG) within the preceding 90 days of reporting utilization levels may be excluded from the utilization calculation.

(iii) All service providers shall maintain no more than a six-month inventory of telephone numbers in each rate center or service area in which it provides telecommunications service.

(iv) The NANPA shall withhold numbering resources from any U.S. carrier that fails to comply with the reporting and numbering resource application requirements established in this part. The NANPA shall not issue numbering resources to a carrier without an Operating Company Number (OCN). The NANPA must notify the carrier in writing of its decision to withhold numbering resources within ten (10) days of receiving a request for numbering resources. The carrier may challenge the NANPA's decision to the appropriate state regulatory commission. The state regulatory commission may affirm or overturn the NANPA's decision to withhold numbering resources from the carrier based on its determination of compliance with the reporting and numbering resource application requirements herein.

(h) [Reserved]

(i) *Reclamation of numbering resources.* (1) Reclamation refers to the process by which service providers are required to return numbering resources to the NANPA or the Pooling Administrator.

(2) State commissions may investigate and determine whether service

providers have activated their numbering resources and may request proof from all service providers that numbering resources have been activated and assignment of telephone numbers has commenced.

(3) Service providers may be required to reduce contamination levels to facilitate reclamation and/or pooling.

(4) State commissions shall provide service providers an opportunity to explain the circumstances causing the delay in activating and commencing assignment of their numbering resources prior to initiating reclamation.

(5) The NANPA and the Pooling Administrator shall abide by the state commission's determination to reclaim numbering resources if the state commission is satisfied that the service provider has not activated and commenced assignment to end users of their numbering resources within six months of receipt.

(6) The NANPA and Pooling Administrator shall initiate reclamation within sixty days of expiration of the service provider's applicable activation deadline.

(7) If a state commission declines to exercise the authority delegated to it in this paragraph, the entity or entities designated by the Commission to serve as the NANPA shall exercise this authority with respect to NXX codes and the Pooling Administrator shall exercise this authority with respect to thousands-blocks. The NANPA and the Pooling Administrator shall consult with the Common Carrier Bureau prior to exercising the authority delegated to it in this provision.

(j) *Sequential number assignment.* (1) All service providers shall assign all available telephone numbers within an opened thousands-block before assigning telephone numbers from an uncontaminated thousands-block, unless the available numbers in the opened thousands-block are not sufficient to meet a specific customer request. This requirement shall apply to a service provider's existing numbering resources as well as any new numbering resources it obtains in the future.

(2) A service provider that opens an uncontaminated thousands-block prior to assigning all available telephone numbers within an opened thousands-block should be prepared to demonstrate to the state commission:

(i) A genuine request from a customer detailing the specific need for telephone numbers; and

(ii) The service provider's inability to meet the specific customer request for telephone numbers from the available numbers within the service provider's opened thousands-blocks.

(3) Upon a finding by a state commission that a service provider inappropriately assigned telephone numbers from an uncontaminated thousands-block, the NANPA or the Pooling Administrator shall suspend assignment or allocation of any additional numbering resources to that service provider in the applicable NPA until the service provider demonstrates that it does not have sufficient numbering resources to meet a specific customer request.

[61 FR 47353, Sept. 6, 1996, as amended at 62 FR 55182, Oct. 23, 1997; 65 FR 37707, June 16, 2000]

### § 52.16 Billing and Collection Agent.

The B&C Agent shall:

(a) Calculate, assess, bill and collect payments for numbering administration functions and distribute funds to NANPA on a monthly basis;

(b) Distribute to carriers the ''Telecommunications Reporting Worksheet,'' described in § 52.17(b).

(c) Keep confidential all data obtained from carriers and not disclose such data in company-specific form unless authorized by the Commission. Subject to any restrictions imposed by the Chief of the Common Carrier Bureau, the B & C Agent may share data obtained from carriers with the administrators of the universal service support mechanism (See 47 CFR 54.701 of this chapter), the TRS Fund (See 47 CFR 64.604(c)(4)(iii)(H) of this chapter), and the local number portability cost recovery (See 47 CFR 52.32). The B & C Agent shall keep confidential all data obtained from other administrators. The B & C Agent shall use such data, from carriers or administrators, only for calculating, collecting and verifying payments. The Commission shall have access to all data reported to the Administrator. Contributors may make requests for Commission

nondisclosure of company-specific revenue information under §0.459 of this chapter by so indicating on the Telecommunications Reporting Worksheet at the time that the subject data are submitted. The Commission shall make all decisions regarding nondisclosure of company-specific information.

(d) Develop procedures to monitor industry compliance with reporting requirements and propose specific procedures to address reporting failures and late payments;

(e) File annual reports with the appropriate regulatory authorities of the NANP member countries as requested; and

(f) Obtain an audit from an independent auditor after the first year of operations and annually thereafter, which shall evaluate the validity of calculated payments. The B&C Agent shall submit the audit report to the Commission for appropriate review and action.

[62 FR 55183, Oct. 23, 1997, as amended at 64 FR 41330, July 30, 1999]

### §52.17 Costs of number administration.

All telecommunications carriers in the United States shall contribute on a competitively neutral basis to meet the costs of establishing numbering administration.

(a) Contributions to support numbering administration shall be the product of the contributors' end-user telecommunications revenues for the prior calendar year and a contribution factor determined annually by the Chief of the Common Carrier Bureau; such contributions to be no less than twenty-five dollars ($25). The contribution factor shall be based on the ratio of expected number administration expenses to end-user telecommunications revenues. Carriers that have no end-user telecommunications revenues shall contribute twenty-five dollars ($25). In the event that contributions exceed or are inadequate to cover administrative costs, the contribution factor for the following year shall be adjusted by an appropriate amount.

(b) All telecommunications carriers in the United States shall complete and submit a ''Telecommunications Reporting Worksheet'' (as published by the Commission in the FEDERAL REGISTER), which sets forth the information needed to calculate contributions referred to in paragraph (a) of this section. The worksheet shall be certified to by an officer of the contributor, and subject to verification by the Commission or the B & C Agent at the discretion of the Commission. The Chief of the Common Carrier Bureau may waive, reduce, modify, or eliminate contributor reporting requirements that prove unnecessary and require additional reporting requirements that the Bureau deems necessary to the sound and efficient administration of the number administration cost recovery.

[64 FR 41331, July 30, 1999]

### §52.19 Area code relief.

(a) State commissions may resolve matters involving the introduction of new area codes within their states. Such matters may include, but are not limited to: Directing whether area code relief will take the form of a geographic split, an overlay area code, or a boundary realignment; establishing new area code boundaries; establishing necessary dates for the implementation of area code relief plans; and directing public education efforts regarding area code changes.

(b) State commissions may perform any or all functions related to initiation and development of area code relief plans, so long as they act consistently with the guidelines enumerated in this part, and subject to paragraph (b)(2) of this section. For the purposes of this paragraph, initiation and development of area code relief planning encompasses all functions related to the implementation of new area codes that were performed by central office code administrators prior to February 8, 1996. Such functions may include: declaring that the area code relief planning process should begin; convening and conducting meetings to which the telecommunications industry and the public are invited on area code relief for a particular area code; and developing the details of a proposed area code relief plan or plans.

(1) The entity or entities designated by the Commission to serve as central

office code administrator(s) shall initiate and develop area code relief plans for each area code in each state that has not notified such entity or entities, pursuant to paragraph (b)(2) of this section, that the state will handle such functions.

(2) Pursuant to paragraph (b)(1) of this section, a state commission must notify the entity or entities designated by the Commission to serve as central office code administrator(s) for its state that such state commission intends to perform matters related to initiation and development of area code relief planning efforts in its state. Notification shall be written and shall include a description of the specific functions the state commission intends to perform. Where the NANP Administrator serves as the central office code administrator, such notification must be made within 120 days of the selection of the NANP Administrator.

(c) New area codes may be introduced through the use of:

(1) A geographic area code split, which occurs when the geographic area served by an area code in which there are few or no central office codes left for assignment is split into two or more geographic parts;

(2) An area code boundary realignment, which occurs when the boundary lines between two adjacent area codes are shifted to allow the transfer of some central office codes from an area code for which central office codes remain unassigned to an area code for which few or no central office codes are left for assignment; or

(3) An area code overlay, which occurs when a new area code is introduced to serve the same geographic area as an existing area code, subject to the following conditions:

(i) No area code overlay may be implemented unless all central office codes in the new overlay area code are assigned to those entities requesting assignment on a first-come, first-serve basis, regardless of the identity of, technology used by, or type of service provided by that entity. No group of telecommunications carriers shall be excluded from assignment of central office codes in the existing area code, or be assigned such codes only from the overlay area code, based solely on that group's provision of a specific type of telecommunications service or use of a particular technology; and,

(ii) No area code overlay may be implemented unless there exists, at the time of implementation, mandatory ten-digit dialing for every telephone call within and between all area codes in the geographic area covered by the overlay area code.

[61 FR 47353, Sept. 6, 1996, as amended at 64 FR 63617, Nov. 16, 1998; 64 FR 62984, Nov. 18, 1999]

## Subpart C—Number Portability

SOURCE: 61 FR 38637, July 25, 1996, unless otherwise noted. Redesignated at 61 FR 47353, Sept. 6, 1996.

### § 52.20 Thousands-block number pooling.

(a) *Definition.* Thousands-block number pooling is a process by which the 10,000 numbers in a central office code (NXX) are separated into ten sequential blocks of 1,000 numbers each (thousands-blocks), and allocated separately within a rate center.

(b) *General requirements.* Pursuant to the Commission's adoption of thousands-block number pooling as a mandatory nationwide numbering resource optimization strategy, all carriers capable of providing local number portability (LNP) must participate in thousands-block number pooling where it is implemented and consistent with the national thousands-block number pooling framework established by the Commission.

(c) *Donation of thousands-blocks.* (1) All service providers required to participate in thousands-block number pooling shall donate thousands-blocks with less than ten percent contamination to the thousands-block number pool for the rate center within which the numbering resources are assigned.

(2) All service providers required to participate in thousands-block number pooling shall be allowed to maintain at least one thousands-block per rate center, even if the thousands-block is less than ten-percent contaminated, as an initial block or footprint block.

(3) Telephone numbers assigned to customers of service providers from donated thousands-blocks that are contaminated shall be ported back to the donating service provider.

(d) *Thousands-Block Pooling Administrator.* (1) The Pooling Administrator shall be a non-governmental entity that is impartial and not aligned with any particular telecommunication industry segment, and shall comply with the same neutrality requirements that the NANPA is subject to under this part.

(2) The Pooling Administrator shall maintain no more than a six-month inventory of telephone numbers in each thousands-block number pool.

[65 FR 37709, June 16, 2000]

### §52.21 Definitions.

As used in this subpart:

(a) The term *broadband PCS* has the same meaning as that term is defined in §24.5 of this chapter.

(b) The term *cellular service* has the same meaning as that term is defined in §22.99 of this chapter.

(c) The term *covered CMRS* means broadband PCS, cellular, and 800/900 MHz SMR licensees that hold geographic area licenses or are incumbent SMR wide area licensees, and offer real-time, two-way switched voice service, are interconnected with the public switched network, and utilize an in-network switching facility that enables such CMRS systems to reuse frequencies and accomplish seamless hand-offs of subscriber calls.

(d) The term *database method* means a number portability method that utilizes one or more external databases for providing called party routing information.

(e) The term *downstream database* means a database owned and operated by an individual carrier for the purpose of providing number portability in conjunction with other functions and services.

(f) The term *incumbent wide area SMR licensee* has the same meaning as that term is defined in §20.3 of this chapter.

(g) The term *local exchange carrier* means any person that is engaged in the provision of telephone exchange service or exchange access. For purposes of this subpart, such term does not include a person insofar as such person is engaged in the provision of a commercial mobile service under 47 U.S.C. 332(c).

(h) The term *local number portability administrator (LNPA)* means an independent, non-governmental entity, not aligned with any particular telecommunications industry segment, whose duties are determined by the NANC.

(i) The term *location portability* means the ability of users of telecommunications services to retain existing telecommunications numbers without impairment of quality, reliability, or convenience when moving from one physical location to another.

(j) The term *long-term database method* means a database method that complies with the performance criteria set forth in §52.3(a).

(k) The term *number portability* means the ability of users of telecommunications services to retain, at the same location, existing telecommunications numbers without impairment of quality, reliability, or convenience when switching from one telecommunications carrier to another.

(l) The term *regional database* means an SMS database or an SMS/SCP pair that contains information necessary for carriers to provide number portability in a region as determined by the NANC.

(m) The term *service control point (SCP)* means a database in the public switched network which contains information and call processing instructions needed to process and complete a telephone call. The network switches access an SCP to obtain such information. Typically, the information contained in an SCP is obtained from the SMS.

(n) The term *service management system (SMS)* means a database or computer system not part of the public switched network that, among other things:

(1) Interconnects to an SCP and sends to that SCP the information and call processing instructions needed for a network switch to process and complete a telephone call; and

(2) Provides telecommunications carriers with the capability of entering

and storing data regarding the processing and completing of a telephone call.

(o) The term *service portability* means the ability of users of telecommunications services to retain existing telecommunications numbers without impairment of quality, reliability, or convenience when switching from one telecommunications service to another, without switching from one telecommunications carrier to another.

(p) The term *service provider portability* means the ability of users of telecommunications services to retain, at the same location, existing telecommunications numbers without impairment of quality, reliability, or convenience when switching from one telecommunications carrier to another.

(q) The term *transitional number portability measure* means a method that allows one local exchange carrier to transfer telephone numbers from its network to the network of another telecommunications carrier, but does not comply with the performance criteria set forth in 52.3(a). Transitional number portability measures are technically feasible methods of providing number portability including Remote Call Forwarding (RCF), Direct Inward Dialing (DID), Route Indexing—Portability Hub (RI–PH), Directory Number Route Indexing (DNRI) and other comparable methods.

[61 FR 38637, July 25, 1996. Redesignated at 61 FR 47353, Sept. 6, 1996, as amended at 61 FR 47355, Sept. 6, 1996; 63 FR 68203, Dec. 10, 1998]

### § 52.23 Deployment of long-term database methods for number portability by LECs.

(a) Subject to paragraphs (b) and (c) of this section, all local exchange carriers (LECs) must provide number portability in compliance with the following performance criteria:

(1) Supports network services, features, and capabilities existing at the time number portability is implemented, including but not limited to emergency services, CLASS features, operator and directory assistance services, and intercept capabilities;

(2) Efficiently uses numbering resources;

(3) Does not require end users to change their telecommunications numbers;

(4) Does not result in unreasonable degradation in service quality or network reliability when implemented;

(5) Does not result in any degradation in service quality or network reliability when customers switch carriers;

(6) Does not result in a carrier having a proprietary interest;

(7) Is able to migrate to location and service portability; and

(8) Has no significant adverse impact outside the areas where number portability is deployed.

(b)(1) All LECs must provide a long-term database method for number portability in the 100 largest Metropolitan Statistical Areas (MSAs) by December 31, 1998, in accordance with the deployment schedule set forth in the Appendix to this part, in switches for which another carrier has made a specific request for the provision of number portability, subject to paragraph (b)(2) of this section.

(2) Any procedure to identify and request switches for deployment of number portability must comply with the following criteria:

(i) Any wireline carrier that is certified (or has applied for certification) to provide local exchange service in a state, or any licensed CMRS provider, must be permitted to make a request for deployment of number portability in that state;

(ii) Carriers must submit requests for deployment at least nine months before the deployment deadline for the MSA;

(iii) A LEC must make available upon request to any interested parties a list of its switches for which number portability has been requested and a list of its switches for which number portability has not been requested; and

(iv) After the deadline for deployment of number portability in an MSA in the 100 largest MSAs, according to the deployment schedule set forth in the appendix to this part, a LEC must deploy number portability in that MSA in additional switches upon request within the following time frames:

(A) For remote switches supported by a host switch equipped for portability

(''Equipped Remote Switches''), within 30 days;

(B) For switches that require software but not hardware changes to provide portability (''Hardware Capable Switches''), within 60 days;

(C) For switches that require hardware changes to provide portability (''Capable Switches Requiring Hardware''), within 180 days; and

(D) For switches not capable of portability that must be replaced (''Non-Capable Switches''), within 180 days.

(c) Beginning January 1, 1999, all LECs must make a long-term database method for number portability available within six months after a specific request by another telecommunications carrier in areas in which that telecommunications carrier is operating or plans to operate.

(d) The Chief, Common Carrier Bureau, may waive or stay any of the dates in the implementation schedule, as the Chief determines is necessary to ensure the efficient development of number portability, for a period not to exceed 9 months (*i.e.*, no later than September 30, 1999).

(e) In the event a LEC is unable to meet the Commission's deadlines for implementing a long-term database method for number portability, it may file with the Commission at least 60 days in advance of the deadline a petition to extend the time by which implementation in its network will be completed. A LEC seeking such relief must demonstrate through substantial, credible evidence the basis for its contention that it is unable to comply with the deployment schedule set forth in the appendix to this part 52. Such requests must set forth:

(1) The facts that demonstrate why the carrier is unable to meet the Commission's deployment schedule;

(2) A detailed explanation of the activities that the carrier has undertaken to meet the implementation schedule prior to requesting an extension of time;

(3) An identification of the particular switches for which the extension is requested;

(4) The time within which the carrier will complete deployment in the affected switches; and

(5) A proposed schedule with milestones for meeting the deployment date.

(f) The Chief, Common Carrier Bureau, shall monitor the progress of local exchange carriers implementing number portability, and may direct such carriers to take any actions necessary to ensure compliance with the deployment schedule set forth in the appendix to this part 52.

(g) Carriers that are members of the Illinois Local Number Portability Workshop must conduct a field test of any technically feasible long-term database method for number portability in the Chicago, Illinois, area. The carriers participating in the test must jointly file with the Common Carrier Bureau a report of their findings within 30 days following completion of the test. The Chief, Common Carrier Bureau, shall monitor developments during the field test, and may adjust the field test completion deadline as necessary.

[61 FR 38637, July 25, 1996, as amended at 62 FR 18294, Apr. 15, 1997]

EFFECTIVE DATE NOTE: At 62 FR 18294, Apr. 15, 1997, § 52.23 was amended by removing paragraph (a)(9) and revising paragraphs (a)(4) through (a)(8) and paragraphs (b) and (g). These paragraphs contain information collection and recordkeeping requirements and will not become effective until approval has been given by the Office of Management and Budget.

### § 52.25 Database architecture and administration.

(a) The North American Numbering Council (NANC) shall direct establishment of a nationwide system of regional SMS databases for the provision of long-term database methods for number portability.

(b) All telecommunications carriers shall have equal and open access to the regional databases.

(c) The NANC shall select a local number portability administrator(s) (LNPA(s)) to administer the regional databases within seven months of the initial meeting of the NANC.

(d) The NANC shall determine whether one or multiple administrator(s) should be selected, whether the

LNPA(s) can be the same entity selected to be the North American Numbering Plan Administrator, how the LNPA(s) should be selected, the specific duties of the LNPA(s), the geographic coverage of the regional databases, the technical interoperability and operational standards, the user interface between telecommunications carriers and the LNPA(s), the network interface between the SMS and the downstream databases, and the technical specifications for the regional databases.

(e) Once the NANC has selected the LNPA(s) and determined the locations of the regional databases, it must report its decisions to the Commission.

(f) The information contained in the regional databases shall be limited to the information necessary to route telephone calls to the appropriate telecommunications carriers. The NANC shall determine what specific information is necessary.

(g) Any state may opt out of its designated regional database and implement a state-specific database. A state must notify the Common Carrier Bureau and NANC that it plans to implement a state-specific database within 60 days from the release date of the Public Notice issued by the Chief, Common Carrier Bureau, identifying the administrator selected by the NANC and the proposed locations of the regional databases. Carriers may challenge a state's decision to opt out of the regional database system by filing a petition with the Commission.

(h) Individual state databases must meet the national requirements and operational standards recommended by the NANC and adopted by the Commission. In addition, such state databases must be technically compatible with the regional system of databases and must not interfere with the scheduled implementation of the regional databases.

(i) Individual carriers may download information necessary to provide number portability from the regional databases into their own downstream databases. Individual carriers may mix information needed to provide other services or functions with the information downloaded from the regional databases at their own downstream databases. Carriers may not withhold any information necessary to provide number portability from the regional databases on the grounds that such data has been combined with other information in its downstream database.

### § 52.26 NANC Recommendations on Local Number Portability Administration.

(a) Local number portability administration shall comply with the recommendations of the North American Numbering Council (NANC) as set forth in the report to the Commission prepared by the NANC's Local Number Portability Administration Selection Working Group, dated April 25, 1997 (*Working Group Report*) and its appendices, which are incorporated by reference pursuant to 5 U.S.C. 552(a) and 1 CFR part 51. *Except that:* Section 7.10 of Appendix D of the *Working Group Report* is *not* incorporated herein.

(b) In addition to the requirements set forth in the *Working Group Report*, the following requirements are established:

(1) If a telecommunictions carrier transmits a telephone call to a local exchange carrier's switch that contains any ported numbers, and the telecommunications carrier has failed to perform a database query to determine if the telephone number has been ported to another local exchange carrier, the local exchange carrier may block the unqueried call only if performing the database query is likely to impair network reliability;

(2) The regional limited liability companies (LLCs), already established by telecommunications carriers in each of the original Bell Operating Company regions, shall manage and oversee the local number portability administrators, subject to review by the NANC, but only on an interim basis, until the conclusion of a rulemaking to examine the issue of local number portability administrator oversight and management and the question of whether the LLCs should continue to act in this capacity; and

(3) The NANC shall provide ongoing oversight of number portability administration, including oversight of the regional LLCs, subject to Commission review. Parties shall attempt to resolve

issues regarding number portability deployment among themselves and, if necessary, under the auspices of the NANC. If any party objects to the NANC's proposed resolution, the NANC shall issue a written report summarizing the positions of the parties and the basis for the recommendation adopted by the NANC. The NANC Chair shall submit its proposed resolution of the dispuited issue to the Chief of the Common Carrier Bureau as a recommendation for Commission review. The Chief of the Common Carrier Bureau will place the NANC's proposed resolution on public notice. Recommendations adopted by the NANC and forwarded to the Bureau may be implemented by the parties pending review of the recommendation. Within 90 days of the conclusion of the comment cycle, the Chief of the Common Carrier Bureau may issue an order adopting, modifying, or rejecting the recommendation. If the Chief does not act within 90 days of the conclusion of the comment cycle, the recommendation will be deemed to have been adopted by the Bureau.

(c) The Director of the Federal Register approves this incorporation by reference in accordance with 5 U.S.C. 552(a) and 1 CFR part 51. Copies of the *Working Group Report* and its appendices can be obtained from the Commission's contract copier, International Transcription Service, Inc., 1231 20th St., N.W., Washington, D.C. 20036, and can be inspected during normal business hours at the following locations; Reference Information Center, 445 12th Street, SW., Room CY—A257, Washington, D.C. 20554 or at the Office of the Federal Register, 800 North Capitol Street, N.W., Suite 700, Washington, D.C. The *Working Group Report* and its appendices are also available in the Internet at http://www.fcc.gov/ccb/Nanc/.

[62 FR 48786, Sept. 17, 1997, as amended at 65 FR 58466, Sept. 29, 2000]

### §52.27 Deployment of transitional measures for number portability.

(a) All LECs shall provide transitional number portability measures, as defined in section 52.21(q) of this chapter, 47 CFR 52.21(q), as soon as reasonably possible upon receipt of a specific request from another telecommunications carrier, until such time as the LEC implements a long-term database method for number portability in that area.

(b) A LEC must provide the particular transitional number portability measure requested by a telecommunications carrier, except as set forth in paragraph (c) of this section.

(c) A LEC that does not provide a requested transitional number portability measure must demonstrate that provision of the requested transitional number portability measure either is not technically feasible or if technically feasible, is unduly burdensome.

(1) Previous successful provision of a particular transitional number portability measure by any LEC constitutes substantial evidence that the particular method is technically feasible.

(2) In determining whether provision of a transitional number portability measure is unduly burdensome, relevant factors to consider are the extent of network upgrades needed to provide that particular method, the cost of such upgrades, the business needs of the requesting carrier, and the timetable for deployment of a long-term number portability method in that particular geographic location.

(d) LECs must discontinue using transitional number portability measures in areas where a long-term number portability method has been implemented.

[63 FR 68203, Dec. 10, 1998]

### §52.29 Cost recovery for transitional measures for number portability.

Any cost recovery mechanism for the provision of number portability pursuant to §52.7(a), that is adopted by a state commission must not:

(a) Give one telecommunications carrier an appreciable, incremental cost advantage over another telecommunications carrier, when competing for a specific subscriber (*i.e.*, the recovery mechanism may not have a disparate effect on the incremental costs of competing carriers seeking to serve the same customer); or

(b) Have a disparate effect on the ability of competing telecommunications carriers to earn a normal return on their investment.

### § 52.31 Deployment of long-term database methods for number portability by CMRS providers.

(a) By November 24, 2002, all covered CMRS providers must provide a long-term database method for number portability, including the ability to support roaming, in the MSAs identified in the Appendix to this part in compliance with the performance criteria set forth in section 52.23(a) of this part, in switches for which another carrier has made a specific request for the provision of number portability, subject to paragraph (a)(1) of this section. A licensee may have more than one CMRS system, but only the systems that satisfy the definition of covered CMRS are required to provide number portability.

(1) Any procedure to identify and request switches for development of number portability must comply with the following criteria:

(i) Any wireline carrier that is certified (or has applied for certification) to provide local exchange service in a state, or any licensed CMRS provider, must be permitted to make a request for deployment of number portability in that state;

(ii) For the MSAs identified in the appendix to this part, carriers must submit requests for deployment by February 24, 2002;

(iii) A covered CMRS provider must make available upon request to any interested parties a list of its switches for which number portability has been requested and a list of its switches for which number portability has not been requested;

(iv) After November 24, 2002, a covered CMRS provider must deploy additional switches serving the MSAs identified in the Appendix to this part upon request within the following time frames:

(A) For remote switches supported by a host switch equipped for portability (''Equipped Remote Switches''), within 30 days;

(B) For switches that require software but not hardware changes to provide portability (''Hardware Capable Switches''), within 60 days;

(C) For switches that require hardware changes to provide portability (''Capable Switches Requiring Hardware''), within 180 days; and

(D) For switches not capable of portability that must be replaced (''Non-Capable Switches''), within 180 days.

(v) Carriers must be able to request deployment in any wireless switch that serves any area within the MSA, even if the wireless switch is outside that MSA, or outside any of the MSAs identified in the Appendix to this part.

(2) By November 24, 2002, all covered CMRS providers must be able to support roaming nationwide.

(b) By December 31, 1998, all covered CMRS providers must have the capability to obtain routing information, either by querying the appropriate database themselves or by making arrangements with other carriers that are capable of performing database queries, so that they can deliver calls from their networks to any party that has retained its number after switching from one telecommunications carrier to another.

(c) The Chief, Wireless Telecommunications Bureau, may waive or stay any of the dates in the implementation schedule, as the Chief determines is necessary to ensure the efficient development of number portability, for a period not to exceed 9 months (*i.e.*, no later than September 30, 1999, for the deadline in paragraph (b) of this section, and no later than March 31, 2000, for the deadline in paragraph (a) of this section).

(d) In the event a carrier subject to paragraphs (a) and (b) of this section is unable to meet the Commission's deadlines for implementing a long-term number portability method, it may file with the Commission at least 60 days in advance of the deadline a petition to extend the time by which implementation in its network will be completed. A carrier seeking such relief must demonstrate through substantial, credible evidence the basis for its contention that it is unable to comply with paragraphs (a) and (b) of this section. Such requests must set forth:

(1) The facts that demonstrate why the carrier is unable to meet our deployment schedule;

(2) A detailed explanation of the activities that the carrier has undertaken to meet the implementation schedule prior to requesting an extension of time;

(3) An identification of the particular switches for which the extension is requested;

(4) The time within which the carrier will complete deployment in the affected switches; and

(5) A proposed schedule with milestones for meeting the deployment date.

(e) The Chief, Wireless Telecommunications Bureau, may establish reporting requirements in order to monitor the progress of covered CMRS providers implementing number portability, and may direct such carriers to take any actions necessary to ensure compliance with this deployment schedule.

[61 FR 38637, July 25, 1996, as amended at 62 FR 18295, Apr. 15, 1997; 63 FR 68204, Dec. 10, 1998; 64 FR 22563, Apr. 27, 1999]

### §52.32 Allocation of the shared costs of long-term number portability

(a) The local number portability administrator, as defined in §52.21(h), of each regional database, as defined in §52.21(1), shall recover the shared costs of long-term number portability attributable to that regional database from all telecommunications carriers providing telecommunications service in areas that regional database serves. Pursuant to its duties under §52.26, the local number portability administrator shall collect sufficient revenues to fund the operation of the regional database by:

(1) Assessing a $100 yearly contribution on each telecommunications carrier identified in paragraph (a) introductory text that has no intrastate, interstate, or international end-user telecommunications revenue derived from providing telecommunications service in the areas that regional database serves, and

(2) Assessing on each of the other telecommunications carriers providing telecommunications service in areas that regional database serves, a charge that recovers the remaining shared costs of long-term number portability attributable to that regional database in proportion to the ratio of:

(i) The sum of the intrastate, interstate, and international end-user telecommunications revenues that such telecommunications carrier derives from providing telecommunications service in the areas that regional database serves, ii) to the sum of the intrastate, interstate, and international end-user telecommunications revenues that all telecommunications carriers derive from providing telecommunications service in the areas that regional database serves.

(b) All telecommunications carriers providing service in the United States shall complete and submit a ''Telecommunications Reporting Worksheet'' (as published by the Commission in the FEDERAL REGISTER), which sets forth the information needed to calculate contributions referred to in paragraph (a) of this section. The worksheet shall be certified to by an officer of the contributor, and subject to verification by the Commission or the administrator at the discretion of the Commission. The Chief of the Common Carrier Bureau may waive, reduce, modify, or eliminate contributor reporting requirements that prove unnecessary and require additional reporting requirements that the Bureau deems necessary to the sound and efficient administration of long-term number portability.

(c) Local number portability administrators shall keep all data obtained from contributors confidential and shall not disclose such data in company-specific form unless directed to do so by the Commission. Subject to any restrictions imposed by the Chief of the Common Carrier Bureau, the local number portability administrators may share data obtained from carriers with the administrators of the universal service support mechanism (See 47 CFR 54.701 of this chapter), the TRS Fund (See 47 CFR 64.604(c)(4)(iii)(H) of this chapter), and the North American Numbering Plan cost recovery (See 47 CFR 52.16). The local number portability administrators shall keep confidential all data obtained from other administrators. The

administrators shall use such data, from carriers or administrators, only for purposes of administering local number portability. The Commission shall have access to all data reported to the Administrator. Contributors may make requests for Commission nondisclosure of company-specific revenue information under § 0.459 of this chapter by so indicating on the Telecommunications Reporting Worksheet at the time that the subject data are submitted. The Commission shall make all decisions regarding nondisclosure of company-specific information.

(d) Once a telecommunications carrier has been allocated, pursuant to paragraph (a)(1) or (a)(2) of this section, its portion of the shared costs of long-term number portability attributable to a regional database, the carrier shall treat that portion as a carrier-specific cost directly related to providing number portability.

[63 FR 35160, June 29, 1998, as amended at 64 FR 41331, July 30, 1999]

### § 52.33 Recovery of carrier-specific costs directly related to providing long-term number portability.

(a) Incumbent local exchange carriers may recover their carrier-specific costs directly related to providing long-term number portability by establishing in tariffs filed with the Federal Communications Commission a monthly number-portability charge, as specified in paragraph (a)(1), and a number portability query-service charge, as specified in paragraph (a)(2).

(1) The monthly number-portability charge may take effect no earlier than February 1, 1999, on a date the incumbent local exchange carrier selects, and may end no later than five years after that date.

(i) An incumbent local exchange carrier may assess each end user it serves in the 100 largest metropolitan statistical areas, and each end user it serves from a number-portability-capable switch outside the 100 largest metropolitan statistical areas, one monthly number-portability charge per line except that:

(A) One PBX trunk shall receive nine monthly number-portability charges.

(B) One PRI ISDN line shall receive five monthly number-portability charges.

(C) Lifeline Assistance Program customers shall not receive the monthly number-portability charge.

(ii) An incumbent local exchange carrier may assess on carriers that purchase the incumbent local exchange carrier's switching ports as unbundled network elements under section 251 of the Communications Act, and resellers of the incumbent local exchange carrier's local service, the same charges as described in paragraph (a)(1)(A) of this section, as if the incumbent local exchange carrier were serving those carriers' end users.

(iii) An incumbent local exchange carrier may not assess a monthly number-portability charge for local loops carriers purchase as unbundled network elements under section 251.

(iv) The incumbent local exchange carrier shall levelize the monthly number-portability charge over five years by setting a rate for the charge at which the present value of the revenue recovered by the charge does not exceed the present value of the cost being recovered, using a discount rate equal to the rate of return on investment which the Commission has prescribed for interstate access services pursuant to Part 65 of the Commission's Rules.

(2) The number portability query-service charge may recover only carrier-specific costs directly related to providing long-term number portability that the incumbent local exchange carrier incurs to provide long-term number portability query service to carriers on a prearranged and default basis.

(b) All telecommunications carriers other than incumbent local exchange carriers may recover their number portability costs in any manner consistent with applicable state and federal laws and regulations.

[63 FR 35161, June 29, 1998]

EFFECTIVE DATE NOTE: At 63 FR 35161, June 29, 1998, § 52.33 was added. Paragraph (a)(1) contains information collection requirements and will not become effective until approval has been given by the Office of Management and Budget.

**§§ 52.34–52.99 [Reserved]**

## Subpart D—Toll Free Numbers

SOURCE: 62 FR 20127, Apr. 25, 1997, unless otherwise noted.

### § 52.101 General definitions.

As used in this part:

(a) *Number Administration and Service Center (''NASC'').* The entity that provides user support for the Service Management System database and administers the Service Management System database on a day-to-day basis.

(b) *Responsible Organization (''RespOrg'').* The entity chosen by a toll free subscriber to manage and administer the appropriate records in the toll free Service Management System for the toll free subscriber.

(c) *Service Control Points.* The regional databases in the toll free network.

(d) *Service Management System Database (''SMS Database'').* The administrative database system for toll free numbers. The Service Management System is a computer system that enables Responsible Organizations to enter and amend the data about toll free numbers within their control. The Service Management System shares this information with the Service Control Points. The entire system is the SMS database.

(e) *Toll Free Subscriber.* The entity that requests a Responsible Organization to reserve a toll free number from the SMS database.

(f) *Toll Free Number.* A telephone number for which the toll charges for completed calls are paid by the toll free subscriber. The toll free subscriber's specific geographic location has no bearing on what toll free number it can obtain from the SMS database.

### § 52.103 Lag times.

(a) *Definitions.* As used in this section, the following definitions apply:

(1) *Assigned Status.* A toll free number record that has specific subscriber routing information entered by the Responsible Organization in the Service Management System database and is pending activation in the Service Control Points.

(2) *Disconnect Status.* The toll free number has been discontinued and an exchange carrier intercept recording is being provided.

(3) *Lag Time.* The interval between a toll free number's reservation in the Service Management System database and its conversion to working status, as well as the period of time between disconnection or cancellation of a toll free number and the point at which that toll free number may be reassigned to another toll free subscriber.

(4) *Reserved Status.* The toll free number has been reserved from the Service Management System database by a Responsible Organization for a toll free subscriber.

(5) *Seasonal Numbers.* Toll free numbers held by toll free subscribers who do not have a year-round need for a toll free number.

(6) *Spare Status.* The toll free number is available for assignment by a Responsible Organization.

(7) *Suspend Status.* The toll free service has been temporarily disconnected and is scheduled to be reactivated.

(8) *Unavailable Status.* The toll free number is not available for assignment due to an unusual condition.

(9) *Working Status.* The toll free number is loaded in the Service Control Points and is being utilized to complete toll free service calls.

(b) *Reserved Status.* Toll free numbers may remain in reserved status for up to 45 days. There shall be no extension of the reservation period after expiration of the initial 45-day interval.

(c) *Assigned Status.* Toll free numbers may remain in assigned status until changed to working status or for a maximum of 6 months, whichever occurs first. Toll free numbers that, because of special circumstances, require that they be designated for a particular subscriber far in advance of their actual usage shall not be placed in assigned status, but instead shall be placed in unavailable status.

(d) *Disconnect Status.* Toll free numbers may remain in disconnect status for up to 4 months. No requests for extension of the 4-month disconnect interval shall be granted. All toll free numbers in disconnect status must go directly into the spare category upon expiration of the 4-month disconnect

interval. Responsible Organizations shall not retrieve a toll free number from disconnect status and return that number directly to working status at the expiration of the 4-month disconnect interval.

(e) *Suspend Status.* Toll free numbers may remain in suspend status until changed to working status or for a maximum of 8 months, whichever occurs first. Only numbers involved in billing disputes shall be eligible for suspend status.

(f) *Unavailable Status.* (1) Written requests to make a specific toll free number unavailable must be submitted to DSMI by the Responsible Organization managing the records of the toll free number. The request shall include the appropriate documentation of the reason for the request. DSMI is the only entity that can assign this status to or remove this status from a number. Responsible Organizations that have a toll free subscriber with special circumstances requiring that a toll free number be designated for that particular subscriber far in advance of its actual usage may request that DSMI place such a number in unavailable status.

(2) Seasonal numbers shall be placed in unavailable status. The Responsible Organization for a toll free subscriber who does not have a year round need for a toll free number shall follow the procedures outlined in § 52.103(f)(1) of these rules if it wants DSMI to place a particular toll free number in unavailable status.

**§ 52.105 Warehousing.**

(a) As used in this section, warehousing is the practice whereby Responsible Organizations, either directly or indirectly through an affiliate, reserve toll free numbers from the Service Management System database without having an actual toll free subscriber for whom those numbers are being reserved.

(b) Responsible Organizations shall not warehouse toll free numbers. There shall be a rebuttable presumption that a Responsible Organization is warehousing toll free numbers if:

(1) The Responsible Organization does not have an identified toll free subscriber agreeing to be billed for service associated with each toll free number reserved from the Service Management System database; or

(2) The Responsible Organization does not have an identified toll free subscriber agreeing to be billed for service associated with a toll free number before switching that toll free number from reserved or assigned to working status.

(c) Responsible Organizations shall not maintain a toll free number in reserved status if there is not a prospective toll free subscriber requesting that toll free number.

(d) A Responsible Organization's act of reserving a number from the Service Management System database shall serve as that Responsible Organization's certification that there is an identified toll free subscriber agreeing to be billed for service associated with the toll free number.

(e) *Tariff Provision.* The following provision shall be included in the Service Management System tariff and in the local exchange carriers' toll free database access tariffs:

[T]he Federal Communications Commission (''FCC'') has concluded that warehousing, which the FCC defines as Responsible Organizations, either directly or indirectly through an affiliate, reserving toll free numbers from the SMS database without having an identified toll free subscriber from whom those numbers are being reserved, is an unreasonable practice under § 201(b) of the Communications Act and is inconsistent with the Commission's obligation under § 251(e) of the Communications Act to ensure that numbers are made available on an equitable basis; and if a Responsible Organization does not have an identified toll free subscriber agreeing to be billed for service associated with each toll free number reserved from the database, or if a Responsible Organization does not have an identified, billed toll free subscriber before switching a number from reserved or assigned to working status, then there is a rebuttable presumption that the Responsible Organization is warehousing numbers. Responsible Organizations that warehouse numbers will be subject to penalties.

### § 52.107 Hoarding.

(a) As used in this section, hoarding is the acquisition by a toll free subscriber from a Responsible Organization of more toll free numbers than the toll free subscriber intends to use for the provision of toll free service. The definition of hoarding also includes number brokering, which is the selling of a toll free number by a private entity for a fee.

(1) Toll free subscribers shall not hoard toll free numbers.

(2) No person or entity shall acquire a toll free number for the purpose of selling the toll free number to another entity or to a person for a fee.

(3) Routing multiple toll free numbers to a single toll free subscriber will create a rebuttable presumption that the toll free subscriber is hoarding or brokering toll free numbers.

(b) *Tariff Provision*. The following provision shall be included in the Service Management System tariff and in the local exchange carriers' toll free database access tariffs:

[T]he Federal Communications Commission (''FCC'') has concluded that hoarding, defined as the acquisition of more toll free numbers than one intends to use for the provision of toll free service, as well as the sale of a toll free number by a private entity for a fee, is contrary to the public interest in the conservation of the scarce toll free number resource and contrary to the FCC's responsibility to promote the orderly use and allocation of toll free numbers.

### § 52.109 Permanent cap on number reservations.

(a) A Responsible Organization may have in reserve status, at any one time, either 2000 toll free numbers or 7.5 percent of that Responsible Organization's numbers in working status, whichever is greater.

(b) A Responsible Organization shall never reserve more than 3 percent of the quantity of toll free numbers in spare status as of the previous Sunday at 12:01 a.m. Eastern Time.

(c) The Common Carrier Bureau shall modify the quantity of numbers a Responsible Organization may have in reserve status or the percentage of numbers in the spare poll that a Responsible Organization may reserve when exigent circumstances make such action necessary. The Common Carrier Bureau shall establish, modify, and monitor toll free number conservation plans when exigent circumstances necessitate such action.

## APPENDIX TO PART 52—DEPLOYMENT SCHEDULE FOR LONG-TERM DATABASE METHODS FOR LOCAL NUMBER PORTABILITY

Implementation must be completed by the carriers in the relevant MSAs during the periods specified below:

| | |
|---|---|
| **Phase I—10/1/97–3/31/98** | |
| Chicago, IL | 3 |
| Philadelphia, PA | 4 |
| Atlanta, GA | 8 |
| New York, NY | 2 |
| Los Angeles, CA | 1 |
| Houston, TX | 7 |
| Minneapolis, MN | 12 |
| **Phase II—1/1/98–5/15/98** | |
| Detroit, MI | 6 |
| Cleveland, OH | 20 |
| Washington, DC | 5 |
| Baltimore, MD | 18 |
| Miami, FL | 24 |
| Fort Lauderdale, FL | 39 |
| Orlando, FL | 40 |
| Cincinnati, OH | 30 |
| Tampa, FL | 23 |
| Boston, MA | 9 |
| Riverside, CA | 10 |
| San Diego, CA | 14 |
| Dallas, TX | 11 |
| St. Louis, MO | 16 |
| Phoenix, AZ | 17 |
| Seattle, WA | 22 |
| **Phase III—4/1/98–6/30/98** | |
| Indianapolis, IN | 34 |
| Milwaukee, WI | 35 |
| Columbus, OH | 38 |
| Pittsburgh, PA | 19 |
| Newark, NJ | 25 |
| Norfolk, VA | 32 |
| New Orleans, LA | 41 |
| Charlotte, NC | 43 |
| Greensboro, NC | 48 |
| Nashville, TN | 51 |
| Las Vegas, NV | 50 |
| Nassau, NY | 13 |
| Buffalo, NY | 44 |
| Orange Co, CA | 15 |
| Oakland, CA | 21 |

| | |
|---|---|
| San Francisco, CA | 29 |
| Rochester, NY | 49 |
| Kansas City, KS | 28 |
| Fort Worth, TX | 33 |
| Hartford, CT | 46 |
| Denver, CO | 26 |
| Portland, OR | 27 |

**Phase IV—7/1/98–9/30/98**

| | |
|---|---|
| Grand Rapids, MI | 56 |
| Dayton, OH | 61 |
| Akron, OH | 73 |
| Gary, IN | 80 |
| Bergen, NJ | 42 |
| Middlesex, NJ | 52 |
| Monmouth, NJ | 54 |
| Richmond, VA | 63 |
| Memphis, TN | 53 |
| Louisville, KY | 57 |
| Jacksonville, FL | 58 |
| Raleigh, NC | 59 |
| West Palm Beach, FL | 62 |
| Greenville, SC | 66 |
| Honolulu, HI | 65 |
| Providence, RI | 47 |
| Albany, NY | 64 |
| San Jose, CA | 31 |
| Sacramento, CA | 36 |
| Fresno, CA | 68 |
| San Antonio, TX | 37 |
| Oklahoma City, OK | 55 |
| Austin, TX | 60 |
| Salt Lake City, UT | 45 |
| Tucson, AZ | 71 |

**Phase V—10/1/98–12/31/98**

| | |
|---|---|
| Toledo, OH | 81 |
| Youngstown, OH | 85 |
| Ann Arbor, MI | 95 |
| Fort Wayne, IN | 100 |
| Scranton, PA | 78 |
| Allentown, PA | 82 |
| Harrisburg, PA | 83 |
| Jersey City, NJ | 88 |
| Wilmington, DE | 89 |
| Birmingham, AL | 67 |
| Knoxville, KY | 79 |
| Baton Rouge, LA | 87 |
| Charleston, SC | 92 |
| Sarasota, FL | 93 |
| Mobile, AL | 96 |
| Columbia, SC | 98 |
| Tulsa, OK | 70 |
| Syracuse, NY | 69 |
| Springfield, MA | 86 |
| Ventura, CA | 72 |
| Bakersfield, CA | 84 |
| Stockton, CA | 94 |
| Vallejo, CA | 99 |
| El Paso, TX | 74 |
| Little Rock, AR | 90 |
| Wichita, KS | 97 |
| New Haven, CT | 91 |
| Omaha, NE | 75 |
| Albuquerque, NM | 76 |
| Tacoma, WA | 77 |

[62 FR 18295, Apr. 15, 1997]

EFFECTIVE DATE NOTE: At 62 FR 18295, Apr. 15, 1997, the appendix to part 52 was revised. This appendix contains information collection and recordkeeping requirements and will not become effective until approval has been given by the Office of Management and Budget.

# PART 53—SPECIAL PROVISIONS CONCERNING BELL OPERATING COMPANIES

## Subpart A—General Information

Sec.

53.1 Basis and purpose.
53.3 Terms and definitions.

## Subpart B—Bell Operating Company Entry into InterLATA Services

53.101 Joint marketing of local and long distance services by interLATA carriers.

## Subpart C—Separate Affiliate; Safeguards

53.201 Services for which a section 272 affiliate is required.
53.203 Structural and transactional requirements.
53.205 Fulfillment of certain requests. [Reserved]
53.207 Successor or assign.
53.209 Biennial audit.
53.211 Audit planning.
53.213 Audit analysis and evaluation.

## Subpart D—Manufacturing by Bell Operating Companies

53.301 [Reserved]

## Subpart E—Electronic Publishing by Bell Operating Companies

53.401 [Reserved]

## Subpart F—Alarm Monitoring Services

53.501 [Reserved]

AUTHORITY: Sections 1–5, 7, 201–05, 218, 251, 253, 271–75, 48 Stat. 1070, as amended, 1077; 47 U.S.C. 151–55, 157, 201–05, 218, 251, 253, 271–75, unless otherwise noted.

SOURCE: 62 FR 2967, Jan. 21, 1997, unless otherwise noted.

## Subpart A—General Information

### §53.1 Basis and purpose.

(a) *Basis.* The rules in this part are issued pursuant to the Communications Act of 1934, as amended.

(b) *Purpose.* The purpose of the rules in this part is to implement sections 271 and 272 of the Communications Act of 1934, as amended, 47 U.S.C. 271 and 272.

### §53.3 Terms and definitions.

Terms used in this part have the following meanings:

*Act.* The Act means the Communications Act of 1934, as amended.

*Affiliate.* An affiliate is a person that (directly or indirectly) owns or controls, is owned or controlled by, or is under common ownership or control with, another person. For purposes of this part, the term ''own'' means to own an equity interest (or the equivalent thereof) of more than 10 percent.

*AT&T Consent Decree.* The AT&T Consent Decree is the order entered August 24, 1982, in the antitrust action styled *United States* v. *Western Electric,* Civil Action No. 82–0192, in the United States District Court for the District of Columbia, and any judgment or order with respect to such action entered on or after August 24, 1982.

*Bell Operating Company (BOC).* The term *Bell operating company*

(1) Means any of the following companies: Bell Telephone Company of Nevada, Illinois Bell Telephone Company, Indiana Bell Telephone Company, Incorporated, Michigan Bell Telephone Company, New England Telephone and Telegraph Company, New Jersey Bell Telephone Company, New York Telephone Company, U S West Communications Company, South Central Bell Telephone Company, Southern Bell Telephone and Telegraph Company, Southwestern Bell Telephone Company, The Bell Telephone Company of Pennsylvania, The Chesapeake and Potomac Telephone Company, The Chesapeake and Potomac Telephone Company of Maryland, The Chesapeake and Potomac Telephone Company of Virginia, The Chesapeake and Potomac Telephone Company of West Virginia, The Diamond State Telephone Company, The Ohio Bell Telephone Company, The Pacific Telephone and Telegraph Company, or Wisconsin Telephone Company; and

(2) Includes any successor or assign of any such company that provides wireline telephone exchange service; but

(3) Does not include an affiliate of any such company, other than an affiliate described in paragraphs (1) or (2) of this definition.

*In-Region InterLATA service. In-region interLATA service is interLATA service* that originates in any of a BOC's in-region states, which are the states in which the BOC or any of its affiliates was authorized to provide wireline telephone exchange service pursuant to the reorganization plan approved under the AT&T Consent Decree, as in effect on February 7, 1996. For the purposes of this part, 800 service, private line service, or equivalent services that terminate in a BOC's in-region state and allow the called party to determine the interLATA carrier are considered to be in-region interLATA service.

*InterLATA Information Service.* An *interLATA information service* is an information service that incorporates as a necessary, bundled element an interLATA telecommunications transmission component, provided to the customer for a single charge.

*InterLATA Service.* An *interLATA service* is a service that involves telecommunications between a point located in a LATA and a point located outside such area. The term ''interLATA service'' includes both interLATA telecommunications services and interLATA information services.

*Local Access and Transport Area (LATA).* A *LATA* is a contiguous geographic area:

(1) Established before February 8, 1996 by a BOC such that no exchange area includes points within more than one metropolitan statistical area, consolidated metropolitan statistical area, or state, except as expressly permitted under the AT&T Consent Decree; or

(2) Established or modified by a BOC after February 8, 1996 and approved by the Commission.

*Local Exchange Carrier (LEC).* A *LEC* is any person that is engaged in the provision of telephone exchange service

or exchange access. Such term does not include a person insofar as such person is engaged in the provision of commercial mobile service under section 332(c) of the Act, except to the extent that the Commission finds that such service should be included in the definition of such term.

*Out-of-Region InterLATA service. Out-of-region interLATA service* is interLATA service that originates outside a BOC's in-region states.

*Section 272 affiliate.* A *section 272 affiliate* is a BOC affiliate that complies with the separate affiliate requirements of section 272(b) of the Act and the regulations contained in this part.

## Subpart B—Bell Operating Company Entry Into InterLATA Services

### § 53.101 Joint marketing of local and long distance services by interLATA carriers.

(a) Until a BOC is authorized pursuant to section 271(d) of the Act to provide interLATA services in an in-region State, or until February 8, 1999, whichever is earlier, a telecommunications carrier that serves greater than 5 percent of the Nation's presubscribed access lines may not jointly market in such State telephone exchange service obtained from such company pursuant to section 251(c)(4) of the Act with interLATA services offered by that telecommunications carrier.

(b) For purposes of applying section 271(e) of the Act, telecommunications carriers described in paragraph (a) of this section may not:

(1) Market interLATA services and BOC resold local exchange services through a ''single transaction.'' For purposes of this section, we define a ''single transaction'' to include the use of the same sales agent to market both products to the same customer during a single communication;

(2) Offer interLATA services and BOC resold local exchange services as a bundled package under an integrated pricing schedule.

(c) If a telecommunications carrier described in paragraph (a) of this section advertises the availability of interLATA services and local exchange services purchased from a BOC for resale in a single advertisement, such telecommunications carrier shall not mislead the public by stating or implying that such carrier may offer bundled packages of interLATA service and BOC local exchange service purchased for resale, or that it can provide both services through a single transaction.

## Subpart C—Separate Affiliate; Safeguards

### § 53.201 Services for which a section 272 affiliate is required.

For the purposes of applying section 272(a)(2) of the Act:

(a) *Previously authorized activities.* When providing previously authorized activities described in section 271(f) of the Act, a BOC shall comply with the following:

(1) A BOC shall provide previously authorized interLATA information services and manufacturing activities through a section 272 affiliate no later than February 8, 1997.

(2) A BOC shall provide previously authorized interLATA telecommunications services in accordance with the terms and conditions of the orders entered by the United States District Court for the District of Columbia pursuant to section VII or VIII(C) of the AT&T Consent Decree that authorized such services.

(b) *InterLATA information services.* A BOC shall provide an interLATA information service through a section 272 affiliate when it provides the interLATA telecommunications transmission component of the service either over its own facilities, or by reselling the interLATA telecommunications services of an interexchange provider.

(c) *Out-of-region interLATA information services.* A BOC shall provide out-of-region interLATA information services through a section 272 affiliate.

### § 53.203 Structural and transactional requirements.

(a) *Operational independence.* (1) A section 272 affiliate and the BOC of which it is an affiliate shall not jointly own transmission and switching facilities or the land and buildings where those facilities are located.

(2) A section 272 affiliate shall not perform any operating, installation, or maintenance functions associated with facilities owned by the BOC of which it is an affiliate.

(3) A BOC or BOC affiliate, other than the section 272 affiliate itself, shall not perform any operating, installation, or maintenance functions associated with facilities that the BOC's section 272 affiliate owns or leases from a provider other than the BOC.

(b) *Separate books, records, and accounts.* A section 272 affiliate shall maintain books, records, and accounts, which shall be separate from the books, records, and accounts maintained by the BOC of which it is an affiliate.

(c) *Separate officers, directors, and employees.* A section 272 affiliate shall have separate officers, directors, and employees from the BOC of which it is an affiliate.

(d) *Credit arrangements.* A section 272 affiliate shall not obtain credit under any arrangement that would permit a creditor, upon default, to have recourse to the assets of the BOC of which it is an affiliate.

(e) *Arm's-length transactions.* A section 272 affiliate shall conduct all transactions with the BOC of which it is an affiliate on an arm's length basis, pursuant to the accounting rules described in § 32.27 of this chapter, with any such transactions reduced to writing and available for public inspection.

EFFECTIVE DATE NOTE: At 62 FR 2967, Jan. 21, 1997, § 53.203 was added. Paragraphs (b) and (e) of this section contain information collection requirements and will not become effective until approval is given by the Office of Management and Budget.

### § 53.205 Fulfillment of certain requests. [Reserved]

### § 53.207 Successor or assign.

If a BOC transfers to an affiliated entity ownership of any network elements that must be provided on an unbundled basis pursuant to section 251(c)(3) of the Act, such entity will be deemed to be an ''assign'' of the BOC under section 3(4) of the Act with respect to such transferred network elements. A BOC affiliate shall not be deemed a ''successor or assign'' of a BOC solely because it obtains network elements from the BOC pursuant to section 251(c)(3) of the Act.

[62 FR 2967, Jan. 21, 1997; 63 FR 34604, June 25, 1998]

### § 53.209 Biennial audit.

(a) A Bell operating company required to operate a separate affiliate under section 272 of the Act shall obtain and pay for a Federal/State joint audit every two years conducted by an independent auditor to determine whether the Bell operating company has complied with the rules promulgated under section 272 and particularly the audit requirements listed in paragraph (b) of this section.

(b) The independent audit shall determine:

(1) Whether the separate affiliate required under section 272 of the Act has:

(i) Operated independently of the Bell operating company;

(ii) Maintained books, records, and accounts in the manner prescribed by the Commission that are separate from the books, records and accounts maintained by the Bell operating company;

(iii) Officers, directors and employees that are separate from those of the Bell operating company;

(iv) Not obtained credit under any arrangement that would permit a creditor, upon default, to have recourse to the assets of the Bell operating company; and

(v) Conducted all transactions with the Bell operating company on an arm's length basis with the transactions reduced to writing and available for public inspection.

(2) Whether or not the Bell operating company has:

(i) Discriminated between the separate affiliate and any other entity in the provision or procurement of goods, services, facilities, and information, or the establishment of standards;

(ii) Accounted for all transactions with the separate affiliate in accordance with the accounting principles and rules approved by the Commission.

(3) Whether or not the Bell operating company and an affiliate subject to section 251(c) of the Act:

(i) Have fulfilled requests from unaffiliated entities for telephone exchange service and exchange access within a period no longer than the period in

which it provides such telephone exchange service and exchange access to itself or its affiliates;

(ii) Have made available facilities, services, or information concerning its provision of exchange access to other providers of interLATA services on the same terms and conditions as it has to its affiliate required under section 272 that operates in the same market;

(iii) Have charged its separate affiliate under section 272, or imputed to itself (if using the access for its provision of its own services), an amount for access to its telephone exchange service and exchange access that is no less than the amount charged to any unaffiliated interexchange carriers for such service; and

(iv) Have provided any interLATA or intraLATA facilities or services to its interLATA affiliate and made available such services or facilities to all carriers at the same rates and on the same terms and conditions, and allocated the associated costs appropriately.

(c) An independent audit shall be performed on the first full year of operations of the separate affiliate required under section 272 of the Act, and biennially thereafter.

(d) The Chief, Common Carrier Bureau, shall work with the regulatory agencies in the states having jurisdiction over the Bell operating company's local telephone services, to attempt to form a Federal/State joint audit team with the responsibility for overseeing the planning of the audit as specified in § 53.211 and the analysis and evaluation of the audit as specified in § 53.213. The Federal/State joint audit team may direct the independent auditor to take any actions necessary to ensure compliance with the audit requirements listed in paragraph (b) of this section. If the state regulatory agencies having jurisdiction choose not to participate in the Federal/State joint audit team, the Chief, Common Carrier Bureau, shall establish an FCC audit team to oversee and direct the independent auditor to take any actions necessary to ensure compliance with the audit requirements in paragraph (b) of this section.

[62 FR 2926, Jan. 21, 1997]

**§ 53.211 Audit planning.**

(a) Before selecting a independent auditor, the Bell operating company shall submit preliminary audit requirements, including the proposed scope of the audit and the extent of compliance and substantive testing, to the Federal/State joint audit team organized pursuant to § 53.209(d);

(b) The Federal/State joint audit team shall review the preliminary audit requirements to determine whether it is adequate to meet the audit requirements in § 53.209 (b). The Federal/State joint audit shall have 30 days to review the audit requirements and determine any modifications that shall be incorporated into the final audit requirements.

(c) After the audit requirements have been approved by the Federal/State joint audit team, the Bell operating company shall engage within 30 days an independent auditor to conduct the biennial audit. In making its selection, the Bell operating company shall not engage any independent auditor who has been instrumental during the past two years in designing any of the accounting or reporting systems under review in the biennial audit.

(d) The independent auditor selected by the Bell operating company to conduct the audit shall develop a detailed audit program based on the final audit requirements and submit it to the Federal/State joint audit team. The Federal/State joint audit team shall have 30 days to review the audit program and determine any modifications that shall be incorporated into the final audit program.

(e) During the course of the biennial audit, the independent auditor, among other things, shall:

(1) Inform the Federal/State joint audit team of any revisions to the final audit program or to the scope of the audit.

(2) Notify the Federal/State joint audit team of any meetings with the Bell operating company or its separate affiliate in which audit findings are discussed.

(3) Submit to the Chief, Common Carrier Bureau, any accounting or rule interpretations necessary to complete the audit.

[62 FR 2926, Jan. 21, 1997]

**§ 53.213 Audit analysis and evaluation.**

(a) Within 60 dates after the end of the audit period, but prior to discussing the audit findings with the Bell operating company or the separate affiliate, the independent auditor shall submit a draft of the audit report to the Federal/State joint audit team.

(1) The Federal/State joint audit team shall have 45 days to review the audit findings and audit workpapers, and offer its recommendations concerning the conduct of the audit or the audit findings to the independent auditor. Exceptions of the Federal/State joint audit team to the finding and conclusions of the independent auditor that remain unresolved shall be included in the final audit report.

(2) Within 15 days after receiving the Federal/State joint audit team's recommendations and making appropriate revisions to the audit report, the independent auditor shall submit the audit report to the Bell operating company for its response to the audit findings and send a copy to the Federal/State joint audit team. The independent auditor may request additional time to perform additional audit work as recommended by the Federal/State joint audit team.

(b) Within 30 days after receiving the audit report, the Bell operating company will respond to the audit findings and send a copy of its response to the Federal/State joint audit team. The Bell operating company's response shall be included as part of the final audit report along with any reply that the independent auditor wishes to make to the response.

(c) Within 10 days after receiving the response of the Bell operating company, the independent auditor shall make available for public inspection the final audit report by filing it with the Commission and the state regulatory agencies participating on the joint audit team.

(d) Interested parties may file comments with the Commission within 60 days after the audit report is made available for public inspection.

[62 FR 2927, Jan. 21, 1997]

## Subpart D—Manufacturing by Bell Operating Companies

**§ 53.301 [Reserved]**

## Subpart E—Electronic Publishing by Bell Operating Companies

**§ 53.401 [Reserved]**

## Subpart F—Alarm Monitoring Services

**§ 53.501 [Reserved]**

# PART 54—UNIVERSAL SERVICE

### Subpart A—General Information

Sec.
54.1 Basis and purpose.
54.5 Terms and definitions.
54.7 Intended use of federal universal service support.

### Subpart B—Services Designated for Support

54.101 Supported services for rural, insular and high cost areas.

### Subpart C—Carriers Eligible for Universal Service Support

54.201 Definition of eligible telecommunications carriers, generally.
54.203 Designation of eligible telecommunications carriers for unserved areas.
54.205 Relinquishment of universal service.
54.207 Service areas.

### Subpart D—Universal Service Support for High Cost Areas

54.301 Local switching support.
54.303 Long term support.
54.305 Sale or transfer of exchanges.
54.307 Support to a competitive eligible telecommunications carrier.
54.309 Calculation and distribution of forward-looking support for non-rural carriers.
54.311 Interim hold-harmless support for non-rural carriers.
54.313 State certification.

### Subpart E—Universal Service Support for Low Income Consumers

54.400 Terms and definitions.

54.401 Lifeline defined.
54.403 Lifeline support amount.
54.405 Carrier obligation to offer Lifeline.
54.407 Reimbursement for offering Lifeline.
54.409 Consumer qualification for Lifeline.
54.411 Link Up program defined.
54.413 Reimbursement for revenue forgone in offering a Link Up program.
54.415 Consumer qualification for Link Up.

### Subpart F—Universal Service Support for Schools and Libraries

54.500 Terms and definitions.
54.501 Eligibility for services provided by telecommunications carriers.
54.502 Supported telecommunications services.
54.503 Other supported special services.
54.504 Requests for services.
54.505 Discounts.
54.506 Internal connections.
54.507 Cap.
54.509 Adjustments to the discount matrix.
54.511 Ordering services.
54.513 Resale.
54.515 Distributing support.
54.516 Auditing.
54.517 Services provided by non-telecommunications carriers.
54.518 Support for wide area networks.
54.519 State telecommunications networks.

### Subpart G—Universal Service Support for Health Care Providers

54.601 Eligibility.
54.603 Competitive bid requirements.
54.604 Existing contracts.
54.605 Determining the urban rate.
54.607 Determining the rural rate.
54.609 Calculating support.
54.611 Distributing support.
54.613 Limitations on supported services for rural health care providers.
54.615 Obtaining services.
54.617 Resale.
54.619 Audit program.
54.621 Access to advanced telecommunications and information services.
54.623 Cap.
54.625 Support for services beyond the maximum supported distance for rural health care providers.

### Subpart H—Administration

54.701 Administrator of universal service support mechanisms.
54.702 Administrator's functions and responsibilities.
54.703 The Administrator's Board of Directors.
54.704 The Administrator's Chief Executive Officer.
54.705 Committees of the Administrator's Board of Directors.
54.706 Contributions.
54.707 Audit controls.
54.708 De minimis exemption.
54.709 Computations of required contributions to universal service support mechanisms.
54.711 Contributor reporting requirements.
54.713 Contributors' failure to report or to contribute.
54.715 Administrative expenses of the Administrator.
54.717 Audits of the Administrator.

### Subpart I—Review of Decisions Issued by the Administrator

54.719 Parties permitted to seek review of Administrator decisions.
54.720 Filing deadlines.
54.721 General filing requirements.
54.722 Review by the Common Carrier Bureau or the Commission.
54.723 Standard of review.
54.724 Time periods for Commission approval of Administrator decisions.
54.725 Universal service disbursements during pendency of a request for review and Administrator decision.

### Subpart J—Interstate Access Universal Service Support Mechanism

54.800 Terms and definitions.
54.801 General.
54.802 Obligations of local exchange carriers and the Administrator.
54.803 Universal service zones.
54.804 Preliminary minimum access universal service support for a study area calculated by the Administrator.
54.805 Zone and study area above benchmark revenues calculated by the Administrator.
54.806 Calculation by the Administrator of interstate access universal service support for areas served by price cap local exchange carriers.
54.807 Interstate access universal service support.
54.808 Transition provisions and periodic calculation.
54.809 Carrier certification.

AUTHORITY: 47 U.S.C. 1, 4(i), 201, 205, 214, and 254 unless otherwise noted.

SOURCE: 62 FR 32948, June 17, 1997, unless otherwise noted.

## Subpart A—General Information

### § 54.1 Basis and purpose.

(a) *Basis.* These rules are issued pursuant to the Communications Act of 1934, as amended.

(b) *Purpose.* The purpose of these rules is to implement section 254 of the

Communications Act of 1934, as amended, 47 USC 254.

**§54.5 Terms and definitions.**

Terms used in this part have the following meanings:

*Act.* The term ''Act'' refers to the Communications Act of 1934, as amended.

*Administrator.* The term ''Administrator'' shall refer to the Universal Service Administrative Company that is an independent subsidiary of the National Exchange Carrier Association, Inc., and that has been appointed the permanent Administrator of the federal universal service support mechanisms.

*Competitive eligible telecommunications carrier.* A ''competitive eligible telecommunications carrier'' is a carrier that meets the definition of an ''eligible telecommunications carrier'' below and does not meet the definition of an ''incumbent local exchange carrier'' in §51.5 of this chapter.

*Contributor.* The term ''contributor'' shall refer to an entity required to contribute to the universal service support mechanisms pursuant to §54.703.

*Eligible telecommunications carrier.* ''Eligible telecommunications carrier'' means a carrier designated as such by a state commission pursuant to §54.201.

*Incumbent local exchange carrier.* ''Incumbent local exchange carrier'' or ''ILEC'' has the same meaning as that term is defined in §51.5 of this chapter.

*Information service.* ''Information service'' is the offering of a capability for generating, acquiring, storing, transforming, processing, retrieving, utilizing, or making available information via telecommunications, and includes electronic publishing, but does not include any use of any such capability for the management, control, or operation of a telecommunications system or the management of a telecommunications service.

*Internet access.* ''Internet access'' includes the following elements:

(1) The transmission of information as common carriage;

(2) The transmission of information as part of a gateway to an information service, when that transmission does not involve the generation or alteration of the content of information, but may include data transmission, address translation, protocol conversion, billing management, introductory information content, and navigational systems that enable users to access information services, and that do not affect the presentation of such information to users; and

(3) Electronic mail services (e-mail).

*Interstate telecommunication.* ''Interstate telecommunication'' is a communication or transmission:

(1) From any State, Territory, or possession of the United States (other than the Canal zone), or the District of Columbia, to any other State, Territory, or possession of the United States (other than the Canal Zone), or the District of Columbia,

(2) From or to the United States to or from the Canal Zone, insofar as such communication or transmission takes place within the United States, or

(3) Between points within the United States but through a foreign country.

*Interstate transmission.* ''Interstate transmission'' is the same as interstate telecommunication.

*Intrastate telecommunication.* ''Intrastate telecommunication'' is a communication or transmission from within any State, Territory, or possession of the United States, or the District of Columbia to a location within that same State, Territory, or possession of the United States, or the District of Columbia.

*Intrastate transmission.* ''Intrastate transmission'' is the same as intrastate telecommunication.

*LAN.* ''LAN'' is a local area network, which is a set of high-speed links connecting devices, generally computers, on a single shared medium, usually on the user's premises.

*Rural area.* A ''rural area'' is a nonmetropolitan county or county equivalent, as defined in the Office of Management and Budget's (OMB) Revised Standards for Defining Metropolitan Areas in the 1990s and identifiable from the most recent Metropolitan Statistical Area (MSA) list released by OMB, or any contiguous non-urban Census Tract or Block Numbered Area within an MSA-listed metropolitan county identified in the most recent Goldsmith Modification published by the Office of Rural Health Policy of the

U.S. Department of Health and Human Services.

*Rural telephone company.* ''Rural telephone company'' has the same meaning as that term is defined in § 51.5 of this chapter.

*State commission.* The term ''state commission'' means the commission, board or official (by whatever name designated) that, under the laws of any state, has regulatory jurisdiction with respect to intrastate operations of carriers.

*Technically feasible.* ''Technically feasible'' means capable of accomplishment as evidenced by prior success under similar circumstances. For example, preexisting access at a particular point evidences the technical feasibility of access at substantially similar points. A determination of technical feasibility does not consider economic, accounting, billing, space or site except that space and site may be considered if there is no possibility of expanding available space.

*Telecommunications.* ''Telecommunications'' is the transmission, between or among points specified by the user, of information of the user's choosing, without change in the form or content of the information as sent and received.

*Telecommunications carrier.* A ''telecommunications carrier'' is any provider of telecommunications services, except that such term does not include aggregators of telecommunications services as defined in section 226 of the Act. A telecommunications carrier shall be treated as a common carrier under the Act only to the extent that it is engaged in providing telecommunications services, except that the Commission shall determine whether the provision of fixed and mobile satellite service shall be treated as common carriage. This definition includes cellular mobile radio service (CMRS) providers, interexchange carriers (IXCs) and, to the extent they are acting as telecommunications carriers, companies that provide both telecommunications and information services. Private mobile radio service (PMRS) providers are telecommunications carriers to the extent they provide domestic or international telecommunications for a fee directly to the public.

*Telecommunications channel.* ''Telecommunications channel'' means a telephone line, or, in the case of wireless communications, a transmittal line or cell site.

*Telecommunications service.* ''Telecommunications service'' is the offering of telecommunications for a fee directly to the public, or to such classes of users as to be effectively available directly to the public, regardless of the facilities used.

*Website.* The term ''website'' shall refer to any websites operated by the Administrator in connection with the schools and libraries support mechanism, the rural health care support mechanism, the high cost mechanism, and the low income mechanism.

*Wire center.* A wire center is the location of a local switching facility containing one or more central offices, as defined in the Appendix to part 36 of this chapter. The wire center boundaries define the area in which all customers served by a given wire center are located.

[62 FR 32948, June 17, 1997, as amended at 62 FR 41303, Aug. 1, 1997; 63 FR 70571, Dec. 21, 1998; 64 FR 67431, Dec. 1, 1999]

### § 54.7 Intended use of federal universal service support.

A carrier that receives federal universal service support shall use that support only for the provision, maintenance, and upgrading of facilities and services for which the support is intended.

## Subpart B—Services Designated for Support

### § 54.101 Supported services for rural, insular and high cost areas.

(a) *Services designated for support.* The following services or functionalities shall be supported by federal universal service support mechanisms:

(1) *Voice grade access to the public switched network.* ''Voice grade access'' is defined as a functionality that enables a user of telecommunications services to transmit voice communications, including signalling the network that the caller wishes to place a call, and to receive voice communications,

including receiving a signal indicating there is an incoming call. For the purposes of this part, bandwidth for voice grade access should be, at a minimum, 300 to 3,000 Hertz;

(2) *Local usage.* ''Local usage'' means an amount of minutes of use of exchange service, prescribed by the Commission, provided free of charge to end users;

(3) *Dual tone multi-frequency signaling or its functional equivalent.* ''Dual tone multi-frequency'' (DTMF) is a method of signaling that facilitates the transportation of signaling through the network, shortening call set-up time;

(4) *Single-party service or its functional equivalent.* ''Single-party service'' is telecommunications service that permits users to have exclusive use of a wireline subscriber loop or access line for each call placed, or, in the case of wireless telecommunications carriers, which use spectrum shared among users to provide service, a dedicated message path for the length of a user's particular transmission;

(5) *Access to emergency services.* ''Access to emergency services'' includes access to services, such as 911 and enhanced 911, provided by local governments or other public safety organizations. 911 is defined as a service that permits a telecommunications user, by dialing the three-digit code ''911,'' to call emergency services through a Public Service Access Point (PSAP) operated by the local government. ''Enhanced 911'' is defined as 911 service that includes the ability to provide automatic numbering information (ANI), which enables the PSAP to call back if the call is disconnected, and automatic location information (ALI), which permits emergency service providers to identify the geographic location of the calling party. ''Access to emergency services'' includes access to 911 and enhanced 911 services to the extent the local government in an eligible carrier's service area has implemented 911 or enhanced 911 systems;

(6) *Access to operator services.* ''Access to operator services'' is defined as access to any automatic or live assistance to a consumer to arrange for billing or completion, or both, of a telephone call;

(7) *Access to interexchange service.* ''Access to interexchange service'' is defined as the use of the loop, as well as that portion of the switch that is paid for by the end user, or the functional equivalent of these network elements in the case of a wireless carrier, necessary to access an interexchange carrier's network;

(8) *Access to directory assistance.* ''Access to directory assistance'' is defined as access to a service that includes, but is not limited to, making available to customers, upon request, information contained in directory listings; and

(9) *Toll limitation for qualifying low-income consumers.* Toll limitation for qualifying low-income consumers is described in subpart E of this part.

(b) *Requirement to offer all designated services.* An eligible telecommunications carrier must offer each of the services set forth in paragraph (a) of this section in order to receive federal universal service support.

(c) *Additional time to complete network upgrades.* A state commission may grant the petition of a telecommunications carrier that is otherwise eligible to receive universal service support under § 54.201 requesting additional time to complete the network upgrades needed to provide single-party service, access to enhanced 911 service, or toll limitation. If such petition is granted, the otherwise eligible telecommunications carrier will be permitted to receive universal service support for the duration of the period designated by the state commission. State commissions should grant such a request only upon a finding that exceptional circumstances prevent an otherwise eligible telecommunications carrier from providing single-party service, access to enhanced 911 service, or toll limitation. The period should extend only as long as the relevant state commission finds that exceptional circumstances exist and should not extend beyond the time that the state commission deems necessary for that eligible telecommunications carrier to complete network upgrades. An otherwise eligible telecommunications carrier that is incapable of offering one or more of these three specific universal services must demonstrate to the state commission that exceptional circumstances

exist with respect to each service for which the carrier desires a grant of additional time to complete network upgrades.

[62 FR 32948, June 17, 1997, as amended at 63 FR 2125, Jan. 13, 1998; 63 FR 33585, June 19, 1998]

## Subpart C—Carriers Eligible for Universal Service Support

### § 54.201 Definition of eligible telecommunications carriers, generally.

(a) *Carriers eligible to receive support.* (1) Beginning January 1, 1998, only eligible telecommunications carriers designated under paragraphs (b) through (d) of this section shall receive universal service support distributed pursuant to part 36 and part 69 of this chapter, and subparts D and E of this part.

(2) A state commission that is unable to designate as an eligible telecommunications carrier, by January 1, 1998, a carrier that sought such designation before January 1, 1998, may, once it has designated such carrier, file with the Commission a petition for waiver of paragraph (a)(1) of this section requesting that the carrier receive universal service support retroactive to January 1, 1998. The state commission must explain why it did not designate such carrier as eligible by January 1, 1998, and provide a justification for why providing support retroactive to January 1, 1998, serves the public interest.

(3) This paragraph does not apply to offset or reimbursement support distributed pursuant to subpart G of this part.

(4) This paragraph does not apply to support distributed pursuant to subpart F of this part.

(b) A state commission shall upon its own motion or upon request designate a common carrier that meets the requirements of paragraph (d) of this section as an eligible telecommunications carrier for a service area designated by the state commission.

(c) Upon request and consistent with the public interest, convenience, and necessity, the state commission may, in the case of an area served by a rural telephone company, and shall, in the case of all other areas, designate more than one common carrier as an eligible telecommunications carrier for a service area designated by the state commission, so long as each additional requesting carrier meets the requirements of paragraph (d) of this section. Before designating an additional eligible telecommunications carrier for an area served by a rural telephone company, the state commission shall find that the designation is in the public interest.

(d) A common carrier designated as an eligible telecommunications carrier under this section shall be eligible to receive universal service support in accordance with section 254 of the Act and shall, throughout the service area for which the designation is received:

(1) Offer the services that are supported by federal universal service support mechanisms under subpart B of this part and section 254(c) of the Act, either using its own facilities or a combination of its own facilities and resale of another carrier's services (including the services offered by another eligible telecommunications carrier); and

(2) Advertise the availability of such services and the charges therefore using media of general distribution.

(e) For the purposes of this section, the term *facilities* means any physical components of the telecommunications network that are used in the transmission or routing of the services that are designated for support pursuant to subpart B of this part.

(f) For the purposes of this section, the term ''own facilities'' includes, but is not limited to, facilities obtained as unbundled network elements pursuant to part 51 of this chapter, provided that such facilities meet the definition of the term ''facilities'' under this subpart.

(g) A state commission shall not require a common carrier, in order to satisfy the requirements of paragraph (d)(1) of this section, to use facilities that are located within the relevant service area, as long as the carrier uses facilities to provide the services designated for support pursuant to subpart B of this part within the service area.

(h) A state commission shall designate a common carrier that meets the requirements of this section as an

eligible telecommunications carrier irrespective of the technology used by such carrier.

(i) A state commission shall not designate as an eligible telecommunications carrier a telecommunications carrier that offers the services supported by federal universal service support mechanisms exclusively through the resale of another carrier's services.

[62 FR 32948, June 17, 1997, as amended at 63 FR 2125, Jan. 13, 1998; 64 FR 62123, Nov. 16, 1999]

### § 54.203 Designation of eligible telecommunications carriers for unserved areas.

(a) If no common carrier will provide the services that are supported by federal universal service support mechanisms under section 254(c) of the Act and subpart B of this part to an unserved community or any portion thereof that requests such service, the Commission, with respect to interstate services, or a state commission, with respect to intrastate services, shall determine which common carrier or carriers are best able to provide such service to the requesting unserved community or portion thereof and shall order such carrier or carriers to provide such service for that unserved community or portion thereof.

(b) Any carrier or carriers ordered to provide such service under this section shall meet the requirements of section 54.201(d) and shall be designated as an eligible telecommunications carrier for that community or portion thereof.

### § 54.205 Relinquishment of universal service.

(a) A state commission shall permit an eligible telecommunications carrier to relinquish its designation as such a carrier in any area served by more than one eligible telecommunications carrier. An eligible telecommunications carrier that seeks to relinquish its eligible telecommunications carrier designation for an area served by more than one eligible telecommunications carrier shall give advance notice to the state commission of such relinquishment.

(b) Prior to permitting a telecommunications carrier designated as an eligible telecommunications carrier to cease providing universal service in an area served by more than one eligible telecommunications carrier, the state commission shall require the remaining eligible telecommunications carrier or carriers to ensure that all customers served by the relinquishing carrier will continue to be served, and shall require sufficient notice to permit the purchase or construction of adequate facilities by any remaining eligible telecommunications carrier. The state commission shall establish a time, not to exceed one year after the state commission approves such relinquishment under this section, within which such purchase or construction shall be completed.

### § 54.207 Service areas.

(a) The term *service area* means a geographic area established by a state commission for the purpose of determining universal service obligations and support mechanisms. A service area defines the overall area for which the carrier shall receive support from federal universal service support mechanisms.

(b) In the case of a service area served by a rural telephone company, *service area* means such company's ''study area'' unless and until the Commission and the states, after taking into account recommendations of a Federal-State Joint Board instituted under section 410(c) of the Act, establish a different definition of service area for such company.

(c) If a state commission proposes to define a service area served by a rural telephone company to be other than such company's study area, the Commission will consider that proposed definition in accordance with the procedures set forth in this paragraph.

(1) A state commission or other party seeking the Commission's agreement in redefining a service area served by a rural telephone company shall submit a petition to the Commission. The petition shall contain:

(i) The definition proposed by the state commission; and

(ii) The state commission's ruling or other official statement presenting the state commission's reasons for adopting its proposed definition, including an analysis that takes into account the

recommendations of any Federal-State Joint Board convened to provide recommendations with respect to the definition of a service area served by a rural telephone company.

(2) The Commission shall issue a Public Notice of any such petition within fourteen (14) days of its receipt.

(3) The Commission may initiate a proceeding to consider the petition within ninety (90) days of the release date of the Public Notice.

(i) If the Commission initiates a proceeding to consider the petition, the proposed definition shall not take effect until both the state commission and the Commission agree upon the definition of a rural service area, in accordance with paragraph (b) of this section and section 214(e)(5) of the Act.

(ii) If the Commission does not act on the petition within ninety (90) days of the release date of the Public Notice, the definition proposed by the state commission will be deemed approved by the Commission and shall take effect in accordance with state procedures.

(d) The Commission may, on its own motion, initiate a proceeding to consider a definition of a service area served by a rural telephone company that is different from that company's study area. If it proposes such different definition, the Commission shall seek the agreement of the state commission according to this paragraph.

(1) The Commission shall submit a petition to the state commission according to that state commission's procedures. The petition submitted to the relevant state commission shall contain:

(i) The definition proposed by the Commission; and

(ii) The Commission's decision presenting its reasons for adopting the proposed definition, including an analysis that takes into account the recommendations of any Federal-State Joint Board convened to provide recommendations with respect to the definition of a service area served by a rural telephone company.

(2) The Commission's proposed definition shall not take effect until both the state commission and the Commission agree upon the definition of a rural service area, in accordance with paragraph (b) of this section and section 214(e)(5) of the Act.

(e) The Commission delegates its authority under paragraphs (c) and (d) of this section to the Chief, Common Carrier Bureau.

## Subpart D—Universal Service Support for High Cost Areas

### § 54.301 Local switching support.

(a) *Calculation of local switching support.* (1) Beginning January 1, 1998, an incumbent local exchange carrier that has been designated an eligible telecommunications carrier and that serves a study area with 50,000 or fewer access lines shall receive support for local switching costs using the following formula: the carrier's projected annual unseparated local switching revenue requirement, calculated pursuant to paragraph (d) of this section, shall be multiplied by the local switching support factor. For purposes of this section, local switching costs shall be defined as Category 3 local switching costs under part 36 of this chapter.

(2) *Local switching support factor.* (i) The local switching support factor shall be defined as the difference between the 1996 weighted interstate DEM factor, calculated pursuant to § 36.125(f) of this chapter, and the 1996 unweighted interstate DEM factor.

(ii) If the number of a study area's access lines increases such that, under § 36.125(f) of this chapter, the weighted interstate DEM factor for 1997 or any successive year would be reduced, that lower weighted interstate DEM factor shall be applied to the carrier's 1996 unweighted interstate DEM factor to derive a new local switching support factor.

(3) Beginning January 1, 1998, the sum of the unweighted interstate DEM factor, as defined in § 36.125(a)(5) of this chapter, and the local switching support factor shall not exceed 0.85. If the sum of those two factors would exceed 0.85, the local switching support factor shall be reduced to a level that would reduce the sum of the factors to 0.85.

(b) *Submission of data to the Administrator.* Each incumbent local exchange carrier that has been designated an eligible telecommunications carrier and that serves a study area with 50,000 or

fewer access lines shall, for each study area, provide the Administrator with the projected total unseparated dollar amount assigned to each account listed below for the calendar year following each filing. This information must be provided to the Administrator no later than October 1 of each year. The Administrator shall use this information to calculate the projected annual unseparated local switching revenue requirement pursuant to paragraph (d) of this section.

| | |
|---|---|
| **I** | |
| Telecommunications Plant in Service (TPIS) | Account 2001 |
| Telecommunications Plant—Other | Accounts 2002, 2003, 2005 |
| General Support Assets | Account 2110 |
| Central Office Assets | Accounts 2210, 2220, 2230 |
| Central Office—switching, Category 3 (local switching) | Account 2210, Category 3 |
| Information Origination/Termination Assets | Account 2310 |
| Cable and Wire Facilities Assets | Account 2410 |
| Amortizable Tangible Assets | Account 2680 |
| Intangibles | Account 2690 |
| **II** | |
| Rural Telephone Bank (RTB) Stock | Included in Account 1402 |
| Materials and Supplies | Account 1220.1 |
| Cash Working Capital | Defined in 47 CFR 65.820(d) |
| **III** | |
| Accumulated Depreciation | Account 3100 |
| Accumulated Amortization | Accounts 3400, 3500, 3600 |
| Net Deferred Operating Income Taxes | Accounts 4100, 4340 |
| Network Support Expenses | Account 6110 |
| General Support Expenses | Account 6120 |
| Central Office Switching, Operator Systems, and Central Office Transmission Expenses. | Accounts 6210, 6220, 6230 |
| Information Origination/Termination Expenses | Account 6310 |
| Cable and Wire Facilities Expenses | Account 6410 |
| Other Property, Plant and Equipment Expenses | Account 6510 |
| Network Operations Expenses | Account 6530 |
| Access Expense | Account 6540 |
| Depreciation and Amortization Expense | Account 6560 |
| Marketing Expense | Account 6610 |
| Services Expense | Account 6620 |
| Corporate Operations Expense | Accounts 6710, 6720 |
| Operating Taxes | Accounts 7230, 7240 |
| Federal Investment Tax Credits | Accounts 7210 |
| Provision for Deferred Operating Income Taxes—Net | Account 7250 |
| Allowance for Funds Used During Construction | Account 7340 |
| Charitable Contributions | Included in Account 7370 |
| Interest and Related Items | Account 7500 |
| **IV** | |
| Other Non-Current Assets | Account 1410 |
| Deferred Maintenance and Retirements | Account 1438 |
| Deferred Charges | Account 1439 |
| Other Jurisdictional Assets and Liabilities | Accounts 1500, 4370 |
| Customer Deposits | Account 4040 |
| Other Long-Term Liabilities | Account 4310 |

(c) *Allocation of accounts to switching.* The Administrator shall allocate to local switching, the accounts reported pursuant to paragraph (b) of this section as prescribed in this paragraph.

(1) General Support Assets (Account 2110); Amortizable Tangible Assets (Account 2680); Intangibles (Account 2690); and General Support Expenses (Account 6120) shall be allocated according to the following factor:

Account 2210 Category÷3 (Account 2210 + Account 2220 + Account 2230 + Account 2310 + Account 2410).

(2) Telecommunications Plant—Other (Accounts 2002, 2003, 2005); Rural Telephone Bank (RTB) Stock (included in Account 1402); Materials and Supplies (Account 1220.1); Cash Working Capital (§ 65.820(d) of this chapter); Accumulated Amortization (Accounts 3400, 3500, 3600); Net Deferred Operating Income Taxes (Accounts 4100, 4340); Network Support Expenses (Account 6110); Other Property, Plant and Equipment Expenses (Account 6510); Network Operations Expenses (Account 6530); Marketing Expense (Account 6610); Services Expense (Account 6620); Operating Taxes (Accounts 7230, 7240); Federal Investment Tax Credits (Accounts 7210); Provision for Deferred Operating Income Taxes—Net (Account 7250); Interest and Related Items (Account 7500); Allowance for Funds Used During Construction (Account 7340); Charitable Contributions (included in Account 7370); Other Non-current Assets (Account 1410); Other Jurisdictional Assets and Liabilities (Accounts 1500, 4370); Customer Deposits (Account 4040); Other Long-term Liabilities (Account 4310); and Deferred Maintenance and Retirements (Account 1438) shall be allocated according to the following factor:

Account 2210 Category 3÷Account 2001.

(3) Accumulated Depreciation for Central Office—switching (Account 3100 associated with Account 2210) and Depreciation and Amortization Expense for Central Office—switching (Account 6560 associated with Account 2210) shall be allocated according to the following factor:

Account 2210 Category 3÷Account 2210.

(4) Accumulated Depreciation for General Support Assets (Account 3100 associated with Account 2110) and Depreciation and Amortization Expense for General Support Assets (Account 6560 associated with Account 2110) shall be allocated according to the following factor:

Account 2210 Category 3 ÷ Account 2001.

(5) Corporate Operations Expenses (Accounts 6710, 6720) shall be allocated according to the following factor:

[[Account 2210 Category 3 ÷ (Account 2210 + Account 2220 + Account 2230)]] × (Account 6210 + Account 6220 + Account 6230)] + [(Account 6530 + Account 6610 + Account 6620) × (Account 2210 Category 3 ÷ Account 2001)] ÷ (Account 6210 + Account 6220 + Account 6230 + Account 6310 + Account 6410 + Account 6530 + Account 6610 + Account 6620).

(6) Central Office Switching, Operator Systems, and Central Office Transmission Expenses (Account 6210, Account 6220, Account 6230) shall be allocated according to the following factor:

Account 2210 Category 3 ÷ (Accounts 2210 + 2220 + 2230).

(d) *Calculation of the projected annual unseparated local switching revenue requirement.* The Administrator shall calculate the projected annual unseparated local switching revenue requirement by summing the components listed in this paragraph.

(1) Return on Investment attributable to COE Category 3 shall be obtained by multiplying the average projected unseparated local switching net investment by the authorized interstate rate of return. Projected unseparated local switching net investment shall be calculated as of each December 31 by deducting the accumulated reserves, deferrals and customer deposits attributable to the COE Category 3 investment from the gross investment attributable to COE Category 3. The average projected unseparated local switching net investment shall be calculated by summing the projected unseparated local switching net investment as of December 31 of the calendar year following the filing year and such investment as of December 31 of the filing year and dividing by 2.

(2) Depreciation expense attributable to COE Category 3 investment, allocated pursuant to paragraph (c) of this section.

(3) All expenses, excluding depreciation expense, collected in paragraph (b) of this section, allocated pursuant to paragraph (c) of this section.

(4) Federal income tax attributable to COE Category 3 shall be calculated using the following formula; the accounts listed shall be allocated pursuant to paragraph (c) of this section:

[Return on Investment attributable to COE Category 3 − Account 7340 −

Account 7500—Account 7210)] × [Federal Income Tax Rate ÷ (1 − Federal Income Tax Rate)].

(e) *True-up adjustment*—(1) *Submission of true-up data.* Each incumbent local exchange carrier that has been designated an eligible telecommunications carrier and that serves a study area with 50,000 or fewer access lines shall, for each study area, provide the Administrator with the historical total unseparated dollar amount assigned to each account listed in paragraph (b) of this section for each calendar year no later than 12 months after the end of such calendar year.

(2) *Calculation of true-up adjustment.* (i) The Administrator shall calculate the historical annual unseparated local switching revenue requirement for each carrier when historical data for each calendar year are submitted.

(ii) The Administrator shall calculate each carrier's local switching support payment, calculated pursuant to 54.301(a), using its historical annual unseparated local switching revenue requirement.

(iii) For each carrier receiving local switching support, the Administrator shall calculate the difference between the support payment calculated pursuant to paragraph (e)(2)(ii) of this section and its support payment calculated using its projected annual unseparated local switching revenue requirement.

(iv) The Administrator shall adjust each carrier's local switching support payment by the difference calculated in paragraph (e)(2)(iii) of this section no later than 15 months after the end of the calendar year for which historical data are submitted.

(f) *Calculation of the local switching revenue requirement for average schedule companies.* (1) The local switching revenue requirement for average schedule companies, as defined in § 69.605(c) of this chapter, shall be calculated in accordance with a formula approved or modified by the Commission. The Administrator shall submit to the Commission and the Common Carrier Bureau for review and approval a formula that simulates the disbursements that would be received pursuant to this section by a company that is representative of average schedule companies. For each annual period, the Administrator shall submit the formula, any proposed revisions of such formula, or a certification that no revisions to the formula are warranted on or before December 31 of each year.

(2) The Commission delegates its authority to review, modify, and approve the formula submitted by the Administrator pursuant to this paragraph to the Chief, Common Carrier Bureau.

[63 FR 2126, Jan. 13, 1998; 63 FR 33585, June 19, 1998]

### § 54.303 Long term support.

(a) Beginning January 1, 1998, an eligible telecommunications carrier that participates in the association Common Line pool shall receive Long Term Support.

(b) Long Term Support shall be calculated as prescribed in this paragraph.

(1) To calculate the unadjusted base-level of Long Term Support for 1998, the Administrator shall calculate the difference between the projected Common Line revenue requirement of association Common Line tariff participants projected to be recovered in 1997 and the sum of end user common line charges and the 1997 projected revenue recovered by the association Carrier Common Line charge as calculated pursuant to § 69.105(b)(2) of this chapter.

(2) To calculate Long Term Support for calendar year 1998, the Administrator shall adjust the base-level of Long Term Support calculated in paragraph (b)(1) of this section to reflect the annual percentage change in the actual nationwide average unseparated loop cost per working loop as filed by the Administrator in the previous calendar year, pursuant to § 36.622 of this chapter.

(3) To calculate Long Term Support for calendar year 1999, the Administrator shall adjust the level of support calculated in paragraph (b)(2) of this section to reflect the annual percentage change in the actual nationwide average unseparated loop cost per working loop as filed by the Administrator in the previous calendar year, pursuant to § 36.622 of this chapter.

(4) Beginning January 1, 2000, the Administrator shall calculate Long Term

Support annually by adjusting the previous year's level of support to reflect the annual percentage change in the Department of Commerce's Gross Domestic Product-Consumer Price Index (GDP–CPI).

[63 FR 2128, Jan. 13, 1998; 63 FR 33586, June 19, 1998]

### § 54.305 Sale or transfer of exchanges.

A carrier that acquires telephone exchanges from an unaffiliated carrier shall receive universal service support for the acquired exchanges at the same per-line support levels for which those exchanges were eligible prior to the transfer of the exchanges. A carrier that has entered into a binding commitment to buy exchanges prior to May 7, 1997 will receive support for the newly acquired lines based upon the average cost of all of its lines, both those newly acquired and those it had prior to execution of the sales agreement.

### § 54.307 Support to a competitive eligible telecommunications carrier.

(a) *Calculation of support.* A competitive eligible telecommunications carrier shall receive universal service support to the extent that the competitive eligible telecommunications carrier captures the subscriber lines of an incumbent local exchange carrier (LEC) or serves new subscriber lines in the incumbent LEC's service area.

(1) A competitive eligible telecommunications carrier shall receive support for each line it serves in a particular wire center based on the support the incumbent LEC would receive for each such line.

(2) A competitive eligible telecommunications carrier that uses switching purchased as unbundled network elements pursuant to § 51.307 of this chapter to provide the supported services shall receive the lesser of the unbundled network element price for switching or the per-line DEM support of the incumbent LEC, if any. A competitive eligible telecommunications carrier that uses loops purchased as unbundled network elements pursuant to § 51.307 of this chapter to provide the supported services shall receive the lesser of the unbundled network element price for the loop or the incumbent LEC's per-line payment from the high-cost loop support and LTS, if any. The incumbent LEC providing nondiscriminatory access to unbundled network elements to such competitive eligible telecommunications carrier shall receive the difference between the level of universal service support provided to the competitive eligible telecommunications carrier and the per-customer level of support that the incumbent LEC would have received.

(3) A competitive eligible telecommunications carrier that provides the supported services using neither unbundled network elements purchased pursuant to § 51.307 of this chapter nor wholesale service purchased pursuant to section 251(c)(4) of the Act will receive the full amount of universal service support that the incumbent LEC would have received for that customer.

(4) A competitive eligible telecommunications carrier that provides the supported services using neither unbundled network elements purchased pursuant to § 51.307 of this chapter nor wholesale service purchased pursuant to section 251(c)(4) of the Act will receive the full amount of universal service support previously provided to the incumbent local exchange carrier for that customer. The amount of universal service support provided to such incumbent local exchange carrier shall be reduced by an amount equal to the amount provided to such competitive eligible telecommunications carrier.

(b) In order to receive support pursuant to this subpart, a competitive eligible telecommunications carrier must report to the Administrator the number of working loops it serves in a service area pursuant to the schedule set forth in paragraph (c) of this section. For a competitive eligible telecommunications carrier serving loops in the service area of a rural telephone company, as that term is defined in § 51.5 of this chapter, the carrier must report the number of working loops it serves in the service area. For a competitive eligible telecommunications carrier serving loops in the service area of a non-rural telephone company, the carrier must report the number of working loops it serves in the service area and the number of working loops it serves in each wire center in the

service area. For universal service support purposes, working loops are defined as the number of working Exchange Line C&WF loops used jointly for exchange and message telecommunications service, including C&WF subscriber lines associated with pay telephones in C&WF Category 1, but excluding WATS closed end access and TWX service.

(c) For a competitive eligible telecommunications carrier serving loops in the service area of a rural telephone company, as that term is defined in § 51.5 of this chapter, the carrier must submit no later than July 31st of each year the data required pursuant to paragraph (b) of this section as of December 30th of the previous calendar year, and the carrier may update on a quarterly basis the data required pursuant to paragraph (b) of this section according to the schedule. For a competitive eligible telecommunications carrier serving loops in the service area of a non-rural telephone company, the carrier must submit the data required pursuant to paragraph (b) of this section according to the schedule.

(1) No later than July 31 of each year, submit data as of December 30th of the previous calendar year;

(2) No later than September 30th of each year, submit data as of March 30th of the existing calendar year;

(3) No later than December 30th of each year, submit data as of July 31st of the existing calendar year;

(4) No later than March 30th of each year, submit data as of September 30th of the previous year.

[62 FR 32948, June 17, 1997, as amended at 63 FR 2128, Jan. 13, 1998; 64 FR 67431, Dec. 1, 1999; 65 FR 26516, May 8, 2000]

### § 54.309 Calculation and distribution of forward-looking support for non-rural carriers.

(a) *Calculation of total support available per state.* Beginning January 1, 2000, non-rural incumbent local exchange carriers, and eligible telecommunications carriers serving lines in the service areas of non-rural incumbent local exchange carriers, shall receive universal service support for the forward-looking economic costs of providing supported services in high-cost areas, provided that the State in which the lines served by the carrier are located has complied with the certification requirements in § 54.313. The total amount of forward-looking support available in each State shall be determined according to the following methodology:

(1) For each State, the Commission's cost model shall determine the statewide average forward-looking economic cost (FLEC) per line of providing the supported services. The statewide average FLEC per line shall equal the total FLEC for non-rural carriers to provide the supported services in the State, divided by the number of switched lines used in the Commission's cost model. The total FLEC shall equal average FLEC multiplied by the number of switched lines used in the Commission's cost model.

(2) The Commission's cost model shall determine the national average FLEC per line of providing the supported services. The national average FLEC per line shall equal the total FLEC for non-rural carriers to provide the supported services in all States, divided by the total number of switched lines in all States used in the Commission's cost model.

(3) The national cost benchmark shall equal 135 percent of the national average FLEC per line.

(4) Support calculated pursuant to this section shall be provided to non-rural carriers in each State where the statewide average FLEC per line exceeds the national cost benchmark. The total amount of support provided to non-rural carriers in each State where the statewide average FLEC per line exceeds the national cost benchmark shall equal 76 percent of the amount of the statewide average FLEC per line that exceeds the national cost benchmark, multiplied by the number of lines reported pursuant to § 36.611, § 36.612, and § 54.307 of this chapter.

(5) In the event that a State's statewide average FLEC per line does not exceed the national cost benchmark, non-rural carriers in such State shall be eligible for support pursuant to § 54.311. In the event that a State's statewide average FLEC per line exceeds the national cost benchmark, but the amount of support otherwise provided to a non-rural carrier in that

State pursuant to this section is less than the amount that would be provided pursuant to § 54.311, the carrier shall be eligible for support pursuant to § 54.311.

(b) *Distribution of total support available per state.* The total amount of support available per State calculated pursuant to paragraph (a) of this section shall be distributed to non-rural incumbent local exchange carriers, and eligible telecommunications carriers serving lines in the service areas of non-rural incumbent local exchange carriers, in the following manner:

(1) The Commission's cost model shall determine the percentage of the total amount of support available in the State for each wire center by calculating the ratio of the wire center's FLEC above the national cost benchmark to the total FLEC above the national cost benchmark of all wire centers within the State. A wire center's FLEC above the national cost benchmark shall be equal to the wire center's average FLEC per line above the national cost benchmark, multiplied by the number of switched lines in the wire center used in the Commission's cost model;

(2) The total amount of support distributed to each wire center shall be equal to the percentage calculated for the wire center pursuant to paragraph (b)(1) of this section multiplied by the total amount of support available in the state;

(3) The total amount of support for each wire center pursuant to paragraph (b)(2) of this section shall be divided by the number of lines in the wire center reported pursuant to § 36.611, § 36.612, and § 54.307 of this chapter to determine the per-line amount of forward-looking support for that wire center;

(4) The per-line amount of support for each wire center pursuant to paragraph (b)(3) of this section shall be multiplied by the number of lines served by a non-rural incumbent local exchange carrier in that wire center, or by an eligible telecommunications carrier in that wire center, as reported pursuant to § 36.611, § 36.612, and § 54.307 of this chapter, to determine the amount of forward-looking support to be provided to that carrier.

(5) The total amount of support calculated for each wire center pursuant to paragraph (b)(4) of this section shall be divided by the number of lines in the wire center to determine the per-line amount of forward-looking support for that wire center;

(6) The per-line amount of support for a wire center calculated pursuant to paragraph (b)(5) of the section shall be multiplied by the number of lines served by a non-rural incumbent local exchange carrier in that wire center, or by an eligible telecommunications carrier in that wire center, to determine the amount of forward-looking support to be provided to that carrier.

(c) *Petition for waiver.* Pursuant to section 1.3 of this chapter, any State may file a petition for waiver of paragraph (b) of this section, asking the Commission to distribute support calculated pursuant to paragraph (a) of this section to a geographic area different than the wire center. Such petition must contain a description of the particular geographic level to which the State desires support to be distributed, and an explanation of how waiver of paragraph (b) of this section will further the preservation and advancement of universal service within the State.

[64 FR 67431, Dec. 1, 1999, as amended at 65 FR 26516, May 8, 2000]

### § 54.311 Interim hold-harmless support for non-rural carriers.

(a) *Interim hold-harmless support.* The total amount of interim hold-harmless support provided to a non-rural incumbent local exchange carrier shall equal the amount of support calculated for that carrier pursuant to part 36 of this chapter. The total amount of interim hold-harmless support provided to a non-rural incumbent local exchange carrier shall also include Long Term Support provided pursuant to § 54.303, to the extent that the carrier would otherwise be eligible for such support. Beginning on January 1, 2000, in the event that a State's statewide average FLEC per line, calculated pursuant to § 54.309(a), does not exceed the national cost benchmark, non-rural incumbent local exchange carriers in such State shall receive interim hold-harmless support calculated pursuant to part 36, and, if applicable, § 54.303. In the event

that a State's statewide average FLEC per line, calculated pursuant to § 54.309(a), exceeds the national cost benchmark, but the amount of support that would be provided to a non-rural incumbent local exchange carrier in such State pursuant to § 54.309(b) is less than the amount that would be provided pursuant to part 36 and, if applicable, § 54.303, the carrier shall be eligible for support pursuant to part 36 and, if applicable, § 54.303. To the extent that an eligible telecommunications carrier serves lines in the service area of a non-rural incumbent local exchange carrier receiving interim hold-harmless support, the eligible telecommunications carrier shall also be entitled to interim hold-harmless support in an amount per line equal to the amount per line provided to the non-rural incumbent local exchange carrier pursuant to paragraph (b) of this section.

(b) *Distribution of Interim Hold-Harmless Support Amounts.* Until the third quarter of 2000, interim hold-harmless support shall be distributed pursuant to part 36 and, if applicable, § 54.303 of this subpart. Beginning in the third quarter of 2000, the total amount of interim hold-harmless support provided to each non-rural incumbent local exchange carrier within a particular State pursuant to paragraph (a) shall be distributed first to the carrier's wire center with the highest wire center average FLEC per line until that wire center's average FLEC per line, net of support, equals the average FLEC per line in the second most high-cost wire center. Support shall then be distributed to the carrier's wire center with the highest and second highest wire center average FLEC per line until those wire center's average FLECs per line, net of support, equal the average FLEC per line in the third most high-cost wire center. This process shall continue in a cascading fashion until all of the interim hold-harmless support provided to the carrier has been exhausted.

(c) *Petition for waiver.* Pursuant to section 1.3 of this chapter, a State may file a petition for waiver of paragraph (b) of this section, asking the Commission to distribute interim hold-harmless support to a geographic area different than the wire center. Such petition must contain a description of the particular geographic level to which the State desires interim hold-harmless support to be distributed, and an explanation of how waiver of paragraph (b) of this section will further the preservation and advancement of universal service within the State.

[64 FR 67432, Dec. 1, 1999, as amended at 64 FR 73428, Dec. 30, 1999]

### § 54.313 State certification.

(a) *Certification.* States that desire non-rural incumbent local exchange carriers and/or eligible telecommunications carriers serving lines in the service area of a non-rural incumbent local exchange carrier within their jurisdiction to receive support pursuant to §§ 54.309 and/or 54.311 must file an annual certification with the Administrator and the Commission stating that all federal high-cost support provided to such carriers within that State will be used only for the provision, maintenance, and upgrading of facilities and services for which the support is intended. Support provided pursuant to §§ 54.309 and/or 54.311 shall only be provided to the extent that the State has filed the requisite certification pursuant to this section.

(b) *Certification format.* A certification pursuant to this section may be filed in the form of a letter from the appropriate regulatory authority for the State, and must be filed with both the Office of the Secretary of the Commission clearly referencing CC Docket No. 96–45, and with the Administrator of the high-cost universal service support mechanism, on or before the deadlines set forth in paragraph (c) of this section. The annual certification must identify which carriers in the State are eligible to receive federal support during the applicable 12-month period, and must certify that those carriers will only use the support for the provision, maintenance, and upgrading of facilities and services for which the support is intended. A State may file a supplemental certification for carriers not subject to the State's annual certification. All certifications filed by a State pursuant to this section shall become part of the public record maintained by the Commission.

(c) *Filing Deadlines.* In order for a non-rural incumbent local exchange carrier in a particular State, and/or an eligible telecommunications carrier serving lines in the service area of a non-rural incumbent local exchange carrier, to receive federal high-cost support, the State must file an annual certification, as described in paragraph (b), with both the Administrator and the Commission. Support shall be provided in accordance with the following schedule:

(1) *First Program Year (January 1, 2000–December 31, 2000).* During the first program year (January 1, 2000–December 31, 2000), a carrier in a particular State shall receive support pursuant to § 54.311 of this subpart. If a State files the certification described in this section during the first program year, carriers eligible for support pursuant to § 54.309 shall receive such support pursuant to the following schedule:

(i) *Certifications filed on or before April 1, 2000.* Carriers subject to certifications that apply to the first and second quarters of 2000, and are filed on or before April 1, 2000, shall receive support pursuant to § 54.309 of this subpart for the first and third quarters of 2000 in the third quarter of 2000, and support for the second and fourth quarters of 2000 in the fourth quarter of 2000. Such support shall be net of any support provided pursuant to § 54.311 of this subpart for the first or second quarters of 2000.

(ii) *Certifications filed on or before July 1, 2000.* Carriers subject to certifications filed on or before July 1, 2000, shall receive support pursuant to § 54.309 of this subpart for the fourth quarter of 2000 in the fourth quarter of 2000.

(iii) *Certifications filed after July 1, 2000.* Carriers subject to certifications filed after July 1, 2000, shall not receive support pursuant to § 54.309 of this section in 2000.

[64 FR 67432, Dec. 1, 1999, as amended at 64 FR 73428, Dec. 30, 1999]

## Subpart E—Universal Service Support for Low-Income Consumers

### § 54.400 Terms and definitions.

As used in this subpart, the following terms shall be defined as follows:

(a) *Qualifying low-income consumer.* A ''qualifying low-income consumer'' is a consumer who meets the qualifications for Lifeline, as specified in § 54.409.

(b) *Toll blocking.* ''Toll blocking'' is a service provided by carriers that lets consumers elect not to allow the completion of outgoing toll calls from their telecommunications channel.

(c) *Toll control.* ''Toll control'' is a service provided by carriers that allows consumers to specify a certain amount of toll usage that may be incurred on their telecommunications channel per month or per billing cycle.

(d) *Toll limitation.* ''Toll limitation'' denotes either toll blocking or toll control for eligible telecommunications carriers that are incapable of providing both services. For eligible telecommunications carriers that are capable of providing both services, ''toll limitation'' denotes both toll blocking and toll control.

(e) *Eligible resident of Tribal lands.* An ''eligible resident of Tribal lands'' is a ''qualifying low-income consumer,'' as defined in paragraph (a) of this section, living on or near a reservation, as defined in 25 CFR 20.1(r) and 20.1(v).

[62 FR 32952, June 17, 1997, as amended at 63 FR 2128, Jan. 13, 1998; 65 FR 47905, Aug. 4, 2000]

### § 54.401 Lifeline defined.

(a) As used in this subpart, *Lifeline* means a retail local service offering:

(1) That is available only to qualifying low-income consumers;

(2) For which qualifying low-income consumers pay reduced charges as a result of application of the Lifeline support amount described in § 54.403; and

(3) That includes the services or functionalities enumerated in § 54.101 (a)(1) through (a)(9). The carriers shall offer toll limitation to all qualifying

low-income consumers at the time such consumers subscribe to Lifeline service. If the consumer elects to receive toll limitation, that service shall become part of that consumer's Lifeline service.

(b) [Reserved

(c) Eligible telecommunications carriers may not collect a service deposit in order to initiate Lifeline service, if the qualifying low-income consumer voluntarily elects toll blocking from the carrier, where available. If toll blocking is unavailable, the carrier may charge a service deposit.

(d) The state commission shall file or require the eligible telecommunications carrier to file information with the Administrator demonstrating that the carrier's Lifeline plan meets the criteria set forth in this subpart and stating the number of qualifying low-income consumers and the amount of state assistance. Eligible telecommunications carriers not subject to state commission jurisdiction also shall make such a filing with the Administrator. Lifeline assistance shall be made available to qualifying low-income consumers as soon as the Administrator certifies that the carrier's Lifeline plan satisfies the criteria set out in this subpart.

[62 FR 32948, June 17, 1997, as amended at 63 FR 2128, Jan. 13, 1998; 64 FR 60358, Nov. 5, 1999; 65 FR 47905, Aug. 4, 2000]

### § 54.403 Lifeline support amount.

(a) The Federal Lifeline support amount for all eligible telecommunications carriers shall equal:

(1) *Tier One.* The tariffed rate in effect for the primary residential End User Common Line charge of the incumbent local exchange carrier serving the area in which the qualifying low-income consumer receives service, as determined in accordance with § 69.104 or §§ 69.152(d)(1) and 69.152(q) of this chapter, whichever is applicable;

(2) *Tier Two.* Additional federal Lifeline support in the amount of $1.75 per month will be made available to the eligible telecommunications carrier providing Lifeline service to the qualifying low-income consumer, if that carrier certifies to the Administrator that it will pass through the full amount of Tier-Two support to its qualifying, low-income consumers and that it has received any non-federal regulatory approvals necessary to implement the required rate reduction.

(3) *Tier Three.* Additional federal Lifeline support in an amount equal to one-half the amount of any state-mandated Lifeline support or Lifeline support otherwise provided by the carrier, up to a maximum of $1.75 per month in federal support, will be made available to the carrier providing Lifeline service to a qualifying low-income consumer if the carrier certifies to the Administrator that it will pass through the full amount of Tier-Three support to its qualifying low-income consumers and that it has received any non-federal regulatory approvals necessary to implement the required rate reduction.

(4) *Tier Four.* Additional federal Lifeline support of up to $25 per month will be made available to a eligible telecommunications carrier providing Lifeline service to an eligible resident of Tribal lands, as defined in § 54.400(e), to the extent that:

(i) This amount does not bring the basic local residential rate (including any mileage, zonal, or other non-discretionary charges associated with basic residential service) below $1 per month per qualifying low-income subscribers; and

(ii) The eligible telecommunications carrier certifies to the Administrator that it will pass through the full Tier-Four amount to qualifying eligible residents of Tribal lands and that it has received any non-federal regulatory approvals necessary to implement the required rate reduction.

(b) For a qualifying low-income consumer who is not an eligible resident of Tribal lands, as defined in § 54.400(e), the federal Lifeline support amount shall not exceed $3.50 plus the tariffed rate in effect for the primary residential End User Common Line charge of the incumbent local exchange carrier serving the area in which the qualifying low-income consumer receives service, as determined in accordance with § 69.104 or § 69.152(d) and (q) of this chapter, whichever is applicable. For an eligible resident of Tribal lands, the federal Lifeline support amount shall not exceed $28.50 plus that same End User Common Line charge. Eligible

telecommunications carriers that charge federal End User Common Line charges or equivalent federal charges shall apply Tier-One federal Lifeline support to waive the federal End-User Common Line charges for Lifeline consumers. Such carriers shall apply any additional federal support amount to a qualifying low-income consumer's intrastate rate, if the carrier has received the non-federal regulatory approvals necessary to implement the required rate reduction. Other eligible telecommunications carriers shall apply the Tier-One federal Lifeline support amount, plus any additional support amount, to reduce their lowest tariffed (or otherwise generally available) residential rate for the services enumerated in §54.101(a)(1) through (a)(9), and charge Lifeline consumers the resulting amount.

[62 FR 32948, June 17, 1997, as amended at 63 FR 2128, Jan. 13, 1998; 65 FR 38689, June 21, 2000; 65 FR 47905, Aug. 4, 2000]

### § 54.405 Carrier obligation to offer Lifeline.

All eligible telecommunications carriers shall:

(a) Make available Lifeline service, as defined in §54.401, to qualifying low-income consumers, and

(b) Publicize the availability of Lifeline service in a manner reasonably designed to reach those likely to qualify for the service.

[65 FR 47905, Aug. 4, 2000]

### § 54.407 Reimbursement for offering Lifeline.

(a) Universal service support for providing Lifeline shall be provided directly to the eligible telecommunications carrier, based on the number of qualifying low-income consumers it serves, under administrative procedures determined by the Administrator.

(b) The eligible telecommunications carrier may receive universal service support reimbursement for each qualifying low-income consumer served. For each consumer receiving Lifeline service, the reimbursement amount shall equal the federal support amount, including the support amount described in §54.403(c). The eligible telecommunications carrier's universal service support reimbursement shall not exceed the carrier's standard, non-Lifeline rate.

(c) In order to receive universal service support reimbursement, the eligible telecommunications carrier must keep accurate records of the revenues it forgoes in providing Lifeline in conformity with §54.401. Such records shall be kept in the form directed by the Administrator and provided to the Administrator at intervals as directed by the Administrator or as provided in this Subpart.

### § 54.409 Consumer qualification for Lifeline.

(a) To qualify to receive Lifeline service in a state that mandates state Lifeline support, a consumer must meet the eligibility criteria established by the state commission for such support. The state commission shall establish narrowly targeted qualification criteria that are based solely on income or factors directly related to income. A state containing geographic areas included in the definition of ''reservation'' and ''near reservation,'' as defined in 25 CFR 20.1(r) and 20.1(v), must ensure that its qualification criteria are reasonably designed to apply to low-income individuals living in such areas.

(b) To qualify to receive Lifeline service in a state that does not mandate state Lifeline support, a consumer must participate in one of the following federal assistance programs: Medicaid; food stamps; Supplemental Security Income; federal public housing assistance; and Low-Income Home Energy Assistance Program. In a state that does not mandate state Lifeline support, each eligible telecommunications carrier providing Lifeline service to a qualifying, low-income consumer must obtain that consumer's signature on a document certifying under penalty of perjury that the consumer receives benefits from one of the programs listed in this paragraph and identifying the program or programs from which that consumer receives benefits. On the same document, a qualifying low-income consumer also must agree to notify the carrier if that consumer ceases to participate in the program or programs.

(c) Notwithstanding paragraphs (a) and (b) of this section, an individual living on a reservation or near a reservation, as defined in 25 CFR 20.1(r) and 20.1(v), shall qualify to receive Tiers One, Two, and Four Lifeline service if the individual participates in one of the following federal assistance programs: Bureau of Indian Affairs general assistance; Tribally administered Temporary Assistance for Needy Families; Head Start (only those meeting its income qualifying standard); or National School Lunch Program's free lunch program. Such qualifying low-income consumer shall also qualify for Tier-Three Lifeline support, if the carrier offering the Lifeline service is not subject to the regulation of the state and provides carrier-matching funds, as described in § 54.403(a)(3). To receive Lifeline support under this paragraph for the eligible resident of Tribal lands, the eligible telecommunications carrier offering the Lifeline service to such consumer must obtain the consumer's signature on a document certifying under penalty of perjury that the consumer receives benefits from at least one of the programs mentioned in this paragraph or paragraph (b) of this section, and lives on or near a reservation, as defined in 25 CFR 20.1(r)and 20.1(v). In addition to identifying in that document the program or programs from which that consumer receives benefits, an eligible resident of Tribal lands also must agree to notify the carrier if that consumer ceases to participate in the program or programs.

[65 FR 47905, Aug. 4, 2000]

### § 54.411 Link Up program defined.

(a) For purposes of this subpart, the term ''Link Up'' shall describe the following assistance program for qualifying low-income consumers, which an eligible telecommunications carrier shall offer as part of its obligation set forth in §§ 54.101(a)(9) and 54.101(b):

(1) A reduction in the carrier's customary charge for commencing telecommunications service for a single telecommunications connection at a consumer's principal place of residence. The reduction shall be half of the customary charge or $30.00, whichever is less; and

(2) A deferred schedule for payment of the charges assessed for commencing service, for which the consumer does not pay interest. The interest charges not assessed to the consumer shall be for connection charges of up to $200.00 that are deferred for a period not to exceed one year. Charges assessed for commencing service include any charges that the carrier customarily assesses to connect subscribers to the network. These charges do not include any permissible security deposit requirements.

(3) For an eligible resident of Tribal lands, a reduction of up to $70, in addition to the reduction in paragraph (a)(1) of this section, to cover 100 percent of the charges between $60 and $130 assessed for commencing telecommunications service at the principal place of residence of the eligible resident of Tribal lands. For purposes of this paragraph, charges assessed for commencing telecommunications services shall include any charges that the carrier customarily assesses to connect subscribers to the network, including facilities-based charges associated with the extension of lines or construction of facilities needed to initiate service. The reduction shall not apply to charges assessed for facilities or equipment that fall on the customer side of demarcation point, as defined in § 68.3 of this chapter.

(b) A qualifying low-income consumer may choose one or both of the programs set forth in paragraphs (a)(1) and (a)(2) of this section. An eligible resident of Tribal lands may participate in paragraphs (a)(1), (a)(2), and (a)(3) of this section.

(c) A carrier's Link Up program shall allow a consumer to receive the benefit of the Link Up program for a second or subsequent time only for a principal place of residence with an address different from the residence address at which the Link Up assistance was provided previously.

(d) An eligible telecommunications carrier shall publicize the availability of Link Up support in a manner reasonably designed to reach those likely to qualify for the support.

[62 FR 32948, June 17, 1997, as amended at 65 FR 47906, Aug. 4, 2000]

**§ 54.413 Reimbursement for revenue forgone in offering a Link Up program.**

(a) Eligible telecommunications carriers may receive universal service support reimbursement for the revenue they forgo in reducing their customary charge for commencing telecommunications service and for providing a deferred schedule for payment of the charges assessed for commencing service for which the consumer does not pay interest, in conformity with § 54.411.

(b) In order to receive universal service support reimbursement for providing Link Up, eligible telecommunications carriers must keep accurate records of the revenues they forgo in reducing their customary charge for commencing telecommunications service and for providing a deferred schedule for payment of the charges assessed for commencing service for which the consumer does not pay interest, in conformity with § 54.411. Such records shall be kept in the form directed by the Administrator and provided to the Administrator at intervals as directed by the Administrator or as provided in this subpart. The forgone revenues for which the eligible telecommunications carrier may receive reimbursement shall include only the difference between the carrier's customary connection or interest charges and the charges actually assessed to the participating low-income consumer.

**§ 54.415 Consumer qualification for Link Up.**

(a) In a state that mandates state Lifeline support, the consumer qualification criteria for Link Up shall be the same as the criteria that the state established for Lifeline qualification in accord with § 54.409(a).

(b) In a state that does not mandate state Lifeline support, the consumer qualification criteria for Link Up shall be the criteria set forth in § 54.409(b).

(c) Notwithstanding paragraphs (a) and (b) of this section, an eligible resident of Tribal lands, as defined in § 54.400(e), shall qualify to receive Link Up support.

[65 FR 47906, Aug. 4, 2000]

**§ 54.500 Terms and definitions.**

(a) *Billed entity.* A ''billed entity'' is the entity that remits payment to service providers for services rendered to eligible schools and libraries.

(b) *Elementary school.* An ''elementary school'' is a non-profit institutional day or residential school that provides elementary education, as determined under state law.

(c) *Library.* A ''library'' includes:

(1) A public library;

(2) A public elementary school or secondary school library;

(3) An academic library;

(4) A research library, which for the purpose of this section means a library that:

(i) Makes publicly available library services and materials suitable for scholarly research and not otherwise available to the public; and

(ii) Is not an integral part of an institution of higher education; and

(5) A private library, but only if the state in which such private library is located determines that the library should be considered a library for the purposes of this definition.

(d) *Library consortium.* A ''library consortium'' is any local, statewide, regional, or interstate cooperative association of libraries that provides for the systematic and effective coordination of the resources of schools, public, academic, and special libraries and information centers, for improving services to the clientele of such libraries. For the purposes of these rules, references to library will also refer to library consortium.

(e) *Lowest corresponding price.* ''Lowest corresponding price'' is the lowest price that a service provider charges to non-residential customers who are similarly situated to a particular school, library, or library consortium for similar services.

(f) *Master contract.* A ''master contract'' is a contract negotiated with a service provider by a third party, the terms and conditions of which are then made available to an eligible school, library, rural health care provider, or consortium that purchases directly from the service provider.

(g) *Minor contract modification.* A ''minor contract modification'' is a change to a universal service contract

that is within the scope of the original contract and has no effect or merely a negligible effect on price, quantity, quality, or delivery under the original contract.

(h) *National school lunch program.* The ''national school lunch program'' is a program administered by the U.S. Department of Agriculture and state agencies that provides free or reduced price lunches to economically disadvantaged children. A child whose family income is between 130 percent and 185 percent of applicable family size income levels contained in the nonfarm poverty guidelines prescribed by the Office of Management and Budget is eligible for a reduced price lunch. A child whose family income is 130 percent or less of applicable family size income levels contained in the nonfarm income poverty guidelines prescribed by the Office of Management and Budget is eligible for a free lunch.

(i) *Pre-discount price.* The ''pre-discount price'' means, in this subpart, the price the service provider agrees to accept as total payment for its telecommunications or information services. This amount is the sum of the amount the service provider expects to receive from the eligible school or library and the amount it expects to receive as reimbursement from the universal service support mechanisms for the discounts provided under this subpart.

(j) *Secondary school.* A ''secondary school'' is a non-profit institutional day or residential school that provides secondary education, as determined under state law. A secondary school does not offer education beyond grade 12.

(k) *State telecommunications network.* A ''state telecommunications network'' is a state government entity that procures, among other things, telecommunications offerings from multiple service providers and bundles such offerings into packages available to schools, libraries, or rural health care providers that are eligible for universal service support, or a state government entity that provides, using its own facilities, such telecommunications offerings to such schools, libraries, and rural health care providers.

(l) *Wide area network.* For purposes of this subpart, a ''wide area network'' is a voice or data network that provides connections from one or more computers within an eligible school or library to one or more computers or networks that are external to such eligible school or library. Excluded from this definition is a voice or data network that provides connections between or among instructional buildings of a single school campus or between or among non-administrative buildings of a single library branch.

[63 FR 2128, Jan. 13, 1998]

### § 54.501 Eligibility for services provided by telecommunications carriers.

(a) Telecommunications carriers shall be eligible for universal service support under this subpart for providing supported services to eligible schools, libraries, and consortia including those entities.

(b) *Schools.* (1) Only schools meeting the statutory definitions of ''elementary school,'' as defined in 20 U.S.C. 8801(14), or ''secondary school,'' as defined in 20 U.S.C. 8801(25), and not excluded under paragraphs (b)(2) or (b)(3) of this section shall be eligible for discounts on telecommunications and other supported services under this subpart.

(2) Schools operating as for-profit businesses shall not be eligible for discounts under this subpart.

(3) Schools with endowments exceeding $50,000,000 shall not be eligible for discounts under this subpart.

(c) *Libraries.* (1) Only libraries eligible for assistance from a State library administrative agency under the Library Services and Technology Act (Public Law 104–208) and not excluded under paragraphs (c)(2) or (c)(3) of this section shall be eligible for discounts under this subpart.

(2) A library's eligibility for universal service funding shall depend on its funding as an independent entity. Only libraries whose budgets are completely separate from any schools (including, but not limited to, elementary and secondary schools, colleges, and universities) shall be eligible for discounts as libraries under this subpart.

(3) Libraries operating as for-profit businesses shall not be eligible for discounts under this subpart.

(d) *Consortia.* (1) For purposes of seeking competitive bids for telecommunications services, schools and libraries eligible for support under this subpart may form consortia with other eligible schools and libraries, with health care providers eligible under subpart G, and with public sector (governmental) entities, including, but not limited to, state colleges and state universities, state educational broadcasters, counties, and municipalities, when ordering telecommunications and other supported services under this subpart. With one exception, eligible schools and libraries participating in consortia with ineligible private sector members shall not be eligible for discounts for interstate services under this subpart. A consortium may include ineligible private sector entities if the pre-discount prices of any services that such consortium receives from ILECs are generally tariffed rates.

(2) For consortia, discounts under this subpart shall apply only to the portion of eligible telecommunications and other supported services used by eligible schools and libraries.

(3) Service providers shall keep and retain records of rates charged to and discounts allowed for eligible schools and libraries—on their own or as part of a consortium. Such records shall be available for public inspection.

[62 FR 32948, June 17, 1997, as amended at 63 FR 2129, Jan. 13, 1998]

### § 54.502 Supported telecommunications services.

For purposes of this subpart, supported telecommunications services provided by telecommunications carriers include all commercially available telecommunications services in addition to all reasonable charges that are incurred by taking such services, such as state and federal taxes. Charges for termination liability, penalty surcharges, and other charges not included in the cost of taking such service shall not be covered by the universal service support mechanisms.

[63 FR 2129, Jan. 13, 1998]

### § 54.503 Other supported special services.

For the purposes of this subpart, other supported special services provided by telecommunications carriers include Internet access and installation and maintenance of internal connections in addition to all reasonable charges that are incurred by taking such services, such as state and federal taxes. Charges for termination liability, penalty surcharges, and other charges not included in the cost of taking such services shall not be covered by the universal service support mechanisms.

[63 FR 2129, Jan. 13, 1998]

### § 54.504 Requests for services.

(a) *Competitive bid requirements.* Except as provided in § 54.511(c), an eligible school, library, or consortium that includes an eligible school or library shall seek competitive bids, pursuant to the requirements established in this subpart, for all services eligible for support under §§ 54.502 and 54.503. These competitive bid requirements apply in addition to state and local competitive bid requirements and are not intended to preempt such state or local requirements.

(b) *Posting of FCC Form 470.* (1) An eligible school, library, or consortium that includes an eligible school or library seeking to receive discounts for eligible services under this subpart, shall submit a completed FCC Form 470 to the Administrator. FCC Form 470 shall include, at a minimum, the following information, to the extent applicable with respect to the services requested:

(i) The computer equipment currently available or budgeted for purchase for the current, next, or other future academic years, as well as whether the computers have modems and, if so, what speed modems;

(ii) The internal connections, if any, that the school or library has in place or has budgeted to install in the current, next, or future academic years, or any specific plans for an organized voluntary effort to connect the classrooms;

(iii) The computer software necessary to communicate with other computers

over an internal network and over the public telecommunications network currently available or budgeted for purchase for the current, next, or future academic years;

(iv) The experience of, and training received by, the relevant staff in the use of the equipment to be connected to the telecommunications network and training programs for which funds are committed for the current, next, or future academic years;

(v) Existing or budgeted maintenance contracts to maintain computers; and

(vi) The capacity of the school's or library's electrical system in terms of how many computers can be operated simultaneously without creating a fire hazard.

(2) FCC Form 470 shall be signed by the person authorized to order telecommunications and other supported services for the eligible school, library, or consortium and shall include that person's certification under oath that:

(i) The school or library is an eligible entity under §§ 254(h)(4) and 254(h)(5) of the Act and the rules adopted under this subpart;

(ii) The services requested will be used solely for educational purposes;

(iii) The services will not be sold, resold, or transferred in consideration for money or any other thing of value;

(iv) If the services are being purchased as part of an aggregated purchase with other entities, the request identifies all co-purchasers and the services or portion of the services being purchased by the school or library;

(v) All of the necessary funding in the current funding year has been budgeted and approved to pay for the ''non-discount'' portion of requested connections and services as well as any necessary hardware or software, and to undertake the necessary staff training required to use the services effectively;

(vi) The school, library, or consortium including those entities has complied with all applicable state and local procurement processes; and

(vii) The school, library, or consortium including those entities has a technology plan that has been certified by its state, the Administrator, or an independent entity approved by the Commission.

(3) The Administrator shall post each FCC Form 470 that it receives from an eligible school, library, or consortium that includes an eligible school or library on its website designated for this purpose.

(4) After posting on the Administrator's website an eligible school's, library's, or consortium's FCC Form 470, the Administrator shall send confirmation of the posting to the entity requesting service. That entity shall then wait at least four weeks from the date on which its description of services is posted on the Administrator's website before making commitments with the selected providers of services. The confirmation from the Administrator shall include the date after which the requestor may sign a contract with its chosen provider(s).

(c) *Filing of FCC Form 471.* An eligible school, library, or consortium that includes an eligible school or library seeking to receive discounts for eligible services under this subpart, shall, upon signing a contract for eligible services, submit a completed FCC Form 471 to the Administrator. A commitment of support is contingent upon the filing of FCC Form 471.

(d) *Rate disputes.* Schools, libraries, and consortia including those entities, and service providers may have recourse to the Commission, regarding interstate rates, and to state commissions, regarding intrastate rates, if they reasonably believe that the lowest corresponding price is unfairly high or low.

(1) Schools, libraries, and consortia including those entities may request lower rates if the rate offered by the carrier does not represent the lowest corresponding price.

(2) Service providers may request higher rates if they can show that the lowest corresponding price is not compensatory, because the relevant school, library, or consortium including those entities is not similarly situated to and subscribing to a similar set of services to the customer paying the lowest corresponding price.

[62 FR 32948, June 17, 1997, as amended at 62 FR 41304, Aug. 1, 1997; 63 FR 2129, Jan. 13, 1998; 63 FR 70572, Dec. 21, 1998]

**§ 54.505 Discounts.**

(a) *Discount mechanism.* Discounts for eligible schools and libraries shall be set as a percentage discount from the pre-discount price.

(b) *Discount percentages.* The discounts available to eligible schools and libraries shall range from 20 percent to 90 percent of the pre-discount price for all eligible services provided by eligible providers, as defined in this subpart. The discounts available to a particular school, library, or consortium of only such entities shall be determined by indicators of poverty and high cost.

(1) For schools and school districts, the level of poverty shall be measured by the percentage of their student enrollment that is eligible for a free or reduced price lunch under the national school lunch program or a federally-approved alternative mechanism. School districts applying for eligible services on behalf of their individual schools may calculate the district-wide percentage of eligible students using a weighted average. For example, a school district would divide the total number of students in the district eligible for the national school lunch program by the total number of students in the district to compute the district-wide percentage of eligible students. Alternatively, the district could apply on behalf of individual schools and use the respective percentage discounts for which the individual schools are eligible.

(2) For libraries and library consortia, the level of poverty shall be based on the percentage of the student enrollment that is eligible for a free or reduced price lunch under the national school lunch program or a federally-approved alternative mechanism in the public school district in which they are located. If the library is not in a school district then its level of poverty shall be based on an average of the percentage of students eligible for the national school lunch program in each of the school districts that children living in the library's location attend. Library systems applying for discounted services on behalf of their individual branches shall calculate the system-wide percentage of eligible families using an unweighted average based on the percentage of the student enrollment that is eligible for a free or reduced price lunch under the national school lunch program in the public school district in which they are located for each of their branches or facilities.

(3) The Administrator shall classify schools and libraries as ''urban'' or ''rural'' based on location in an urban or rural area, according to the following desigantions.

(i) Schools and libraries located in metropolitan counties, as measured by the Office of Management and Budget's Metropolitan Statistical Area method, shall be designated as urban, except for those schools and libraries located within metropolitan counties identified by census block or tract in the Goldsmith Modification.

(ii) Schools and libraries located in non-metropolitan counties, as measured by the Office of Management and Budget's Metropolitan Statistical Area method, shall be designated as rural. Schools and libraries located in rural areas within metropolitan counties identified by census block or tract in the Goldsmith Modification shall also be designated as rural.

(4) School districts, library systems, or other billed entities shall calculate discounts on supported services described in § 54.502 or other supported special services described in § 54.503 that are shared by two or more of their schools, libraries, or consortia members by calculating an average based on the applicable discounts of all member schools and libraries. School districts, library systems, or other billed entities shall ensure that, for each year in which an eligible school or library is included for purposes of calculating the aggregate discount rate, that eligible school or library shall receive a proportionate share of the shared services for which support is sought. For schools, the average discount shall be a weighted average of the applicable discount of all schools sharing a portion of the shared services, with the weighting based on the number of students in each school. For libraries, the average discount shall be a simple average of the applicable discounts to which the libraries sharing a portion of the shared services are entitled.

(c) *Matrix.* The Administrator shall use the following matrix to set a discount rate to be applied to eligible interstate services purchased by eligible schools, school districts, libraries, or library consortia based on the institution's level of poverty and location in an ''urban'' or ''rural'' area.

| Schools and Libraries discount matrix | Discount level | |
|---|---|---|
| How disadvantaged? | Urban discount | Rural discount |
| % of students eligible for national school lunch program | | |
| <1 | 20 | 25 |
| 1–19 | 40 | 50 |
| 20–34 | 50 | 60 |
| 35–49 | 60 | 70 |
| 50–74 | 80 | 80 |
| 75–100 | 90 | 90 |

(d) [Reserved]

(e) *Interstate and intrastate services.* Federal universal service support for schools and libraries shall be provided for both interstate and intrastate services.

(1) Federal universal service support under this subpart for eligible schools and libraries in a state is contingent upon the establishment of intrastate discounts no less than the discounts applicable for interstate services.

(2) A state may, however, secure a temporary waiver of this latter requirement based on unusually compelling conditions.

(f) *State support.* Federal universal service discounts shall be based on the price of a service prior to the application of any state provided support for schools or libraries.

[62 FR 32948, June 17, 1997, as amended at 62 FR 41304, Aug. 1, 1997; 63 FR 2130, Jan. 13, 1998; 63 FR 70572, Dec. 21, 1998]

### § 54.506 Internal connections.

A service is eligible for support as a component of an institution's internal connections if such service is necessary to transport information within one or more instructional buildings of a single school campus or within one or more non-administrative buildings that comprise a single library branch. Discounts are not available for internal connections in non-instructional buildings of a school or school district, or in administrative buildings of a library, to the extent that a library system has separate administrative buildings, unless those internal connections are essential for the effective transport of information to an instructional building of a school or to a non-administrative building of a library. Internal connections do not include connections that extend beyond a single school campus or single library branch. There is a rebuttable presumption that a connection does not constitute an internal connection if it crosses a public right-of-way.

[63 FR 2130, Jan. 13, 1998]

### § 54.507 Cap.

(a) *Amount of the annual cap.* The annual cap on federal universal service support for schools and libraries shall be $2.25 billion per funding year, and all funding authority for a given funding year that is unused in that funding year shall be carried forward into subsequent funding years for use in accordance with demand, with the following exceptions:

(1) No more than $562.5 million shall be collected or spent per quarter for the third and fourth quarters of 1999 and the first and second quarters of 2000 to support the schools and libraries universal service support mechanism. No more than $2.25 billion shall be collected or disbursed during the twelve month period from July 1, 1999 through June 30, 2000.

(2) The carryover of unused funding authority will not apply for the funding period January 1, 1998 through June 30, 1999. To the extent that the amounts collected in the funding period January 1, 1998 through June 30, 1999 are less than $2.25 billion, the difference will not be carried over to subsequent funding years. Carryover of funds will occur only to the extent that

funds are collected but not disbursed in the funding period January 1, 1998 through June 30, 1999.

(b) A funding year for purposes of the schools and libraries cap shall be the period July 1 through June 30. For the initiation of the mechanism only, the eighteen month period from January 1, 1998 to June 30, 1999 shall be considered a funding year. For the 1998–99 funding year:

(1) Schools and libraries filing applications within the initial 75-day filing window, and receiving approval for discounts on recurring services, shall receive funding for requested recurring services through June 30, 1999; and

(2) Schools and libraries filing applications within the initial 75-day filing window, and receiving approval for discounts on eligible nonrecurring services, may receive those nonrecurring services subject to the approved discount amounts through September 30, 1999.

(c) *Requests.* Funds shall be available to fund discounts for eligible schools and libraries and consortia of such eligible entities on a first-come-first-served basis, with requests accepted beginning on the first of July prior to each funding year. The Administrator shall maintain on the Administrator's website a running tally of the funds already committed for the existing funding year. The Administrator shall implement an initial filing period that treats all schools and libraries filing within that period as if their applications were simultaneously received. The initial filing period shall begin on the date that the Administrator begins to receive applications for support, and shall conclude on a date to be determined by the Administrator. The Administrator may implement such additional filing periods as it deems necessary.

(d) *Annual filing requirement.* Schools and libraries, and consortia of such eligible entities shall file new funding requests for each funding year no sooner than the July 1 prior to the start of that funding year.

(e) *Long term contracts.* If schools and libraries enter into long term contracts for eligible services, the Administrator shall only commit funds to cover the pro rata portion of such a long term contract scheduled to be delivered during the funding year for which universal service support is sought.

(f) *Date services must be supplied.* The Administrator shall not approve funding for services received by a school or library before January 1, 1998.

(g) *Rules of priority.* Administrator shall act in accordance with paragraph (g)(1) of this section with respect to applicants that file a Form 471, as described in § 54.504(c) of this part, when a filing period described in paragraph (c) of this section is in effect. Administrator shall act in accordance with paragraph (g)(2) of this section with respect to applicants that file a Form 471, as described in § 54.504(c) of this part, at all times other than within a filing period described in paragraph (c) of this section.

(1) When the filing period described in paragraph (c) of this section closes, Administrator shall calculate the total demand for support submitted by applicants during the filing period. If total demand exceeds the total support available for that funding year, Administrator shall take the following steps:

(i) Schools and Libraries Corporation shall first calculate the demand for telecommunications services and Internet access for all discount categories, as determined by the schools and libraries discount matrix in § 54.505(c) of this part. These services shall receive first priority for the available funding.

(ii) Schools and Libraries Corporation shall then calculate the amount of available funding remaining after providing support for all telecommunications services and Internet access for all discount categories. Schools and Libraries Corporation shall allocate the remaining funds to the requests for support for internal connections, beginning with the most economically disadvantaged schools and libraries, as determined by the schools and libraries discount matrix in § 54.505(c) of this part. Schools and libraries eligible for a 90 percent discount shall receive first priority for the remaining funds, and those funds will be applied to their requests for internal connections.

(iii) To the extent that funds remain after the allocation described in § 54.507(g)(1) (i) and (ii), Schools and Libraries Corporation shall next allocate

funds toward the requests for internal connections submitted by schools and libraries eligible for an 80 percent discount, then for a 70 percent discount, and shall continue committing funds for internal connections in the same manner to the applicants at each descending discount level until there are no funds remaining.

NOTE TO PARAGRAPH (G)(L)(III): To the extent that there are single discount percentage levels associated with ''shared services'' under §54.505(b)(4), the Administrator shall allocate funds for internal connections beginning at the ninety percent discount level, then for the eighty-nine percent discount, then for the eighty-eight percent discount, and shall continue committing funds for internal connections in the same manner to the applicants at each descending discount level until there are no funds remaining.

(iv) If the remaining funds are not sufficient to support all of the funding requests within a particular discount level, Schools and Libraries Corporation shall divide the total amount of remaining support available by the amount of support requested within the particular discount level to produce a pro-rata factor. Schools and Libraries Corporation shall reduce the support level for each applicant within the particular discount level, by multiplying each applicant's requested amount of support by the pro-rata factor.

(v) Schools and Libraries Corporation shall commit funds to all applicants consistent with the calculations described herein.

(2) *Rules of priority*. When expenditures in any funding year reach the level where only $250 million remains before the cap will be reached, funds shall be distributed in accordance to the following rules of priority:

(i) The Administrator or the Administrator's subcontractor shall post a message on the Administrator's website, notify the Commission, and take reasonable steps to notify the educational and library communities that commitments for the remaining $250 million of support will only be made to the most economically disadvantaged schools and libraries (those in the two most disadvantaged categories) for the next 30 days or the remainder of the funding year, whichever is shorter.

(ii) The most economically disadvantaged schools and libraries (those in the two most disadvantaged categories) that have not received discounts from the universal service support mechanism in the previous or current funding years shall have exclusive rights to secure commitments for universal service support under this subpart for a 30-day period or the remainder of the funding year, whichever is shorter. If such schools and libraries have received universal service support only for basic telephone service in the previous or current funding years, they shall remain eligible for the highest priority once spending commitments leave only $250 million remaining before the funding cap is reached.

(iii) Other economically disadvantaged schools and libraries (those in the two most disadvantaged categories) that have received discounts from the universal service support mechanism in the previous or current funding years shall have the next highest priority, if additional funds are available at the end of the 30-day period or the funding year, whichever is shorter.

(iv) After all requests submitted by schools and libraries described in paragraphs (g)(2) and (g)(3) of this section during the 30-day period have been met, the Administrator shall allocate the remaining available funds to all other eligible schools and libraries in the order in which their requests have been received by the Administrator, until the $250 million is exhausted or the funding year ends.

[62 FR 32948, June 17, 1997, as amended at 62 FR 40748, July 30, 1997; 62 FR 41304, Aug. 1, 1997; 62 FR 56120, Oct. 29, 1997; 63 FR 2130, Jan. 13, 1998; 63 FR 3832, Jan. 27, 1998; 63 FR 45958, Aug. 28, 1998; 63 FR 70572, Dec. 21, 1998; 64 FR 22810, Apr. 28, 1999; 64 FR 30442, June 8, 1999; 64 FR 33788, June 24, 1999]

### §54.509 Adjustments to the discount matrix.

(a) *Estimating future spending requests*. When submitting their requests for specific amounts of funding for a funding year, schools, libraries, library consortia, and consortia including such entities shall also estimate their funding requests for the following funding year

to enable the Administrator, to estimate funding demand for the following year.

(b) *Reduction in percentage discounts.* If the estimates schools and libraries make of their future funding needs lead the Administrator to predict that total funding requests for a funding year will exceed the available funding, the Administrator shall calculate the percentage reduction to all schools and libraries, except those in the two most disadvantaged categories, necessary to permit all requests in the next funding year to be fully funded.

(c) *Remaining funds.* If funds remain under the cap at the end of the funding year in which discounts have been reduced below those set in the matrices, the Administrator shall consult with the Commission to establish the best way to distribute those funds.

[62 FR 32948, June 17, 1997, as amended at 62 FR 41304, Aug. 1, 1997; 63 FR 70572, Dec. 21, 1998]

### § 54.511 Ordering services.

(a) *Selecting a provider of eligible services.* In selecting a provider of eligible services, schools, libraries, library consortia, and consortia including any of those entities shall carefully consider all bids submitted and may consider relevant factors other than the pre-discount prices submitted by providers.

(b) *Lowest corresponding price.* Providers of eligible services shall not charge schools, school districts, libraries, library consortia, or consortia including any of these entities a price above the lowest corresponding price for supported services, unless the Commission, with respect to interstate services or the state commission with respect to intrastate services, finds that the lowest corresponding price is not compensatory. Promotional rates offered by a service provider for a period of more than 90 days must be included among the comparable rates upon which the lowest corresponding price is determined.

(c) *Existing contracts.* (1) A signed contract for services eligible for discounts pursuant to this subpart between an eligible school or library as defined under § 54.501 or consortium that includes an eligible school or library and a service provider shall be exempt from the requirements set forth in § 54.504(a), (b)(3), and (b)(4) as follows:

(i) A contract signed on or before July 10, 1997 is exempt from the competitive bid requirements for the life of the contract; or

(ii) A contract signed after July 10, 1997, but before the date on which the universal service competitive bid system described in § 54.504 is operational, is exempt from the competitive bid requirements only with respect to services that are provided under such contract between January 1, 1998 and December 31, 1998.

(2) For a school, library, or consortium that includes an eligible school or library that takes service under or pursuant to a master contract, the date of execution of that master contract represents the applicable date for purposes of determining whether and to what extent the school, library, or consortium is exempt from the competitive bid requirements.

(3) The competitive bid system will be deemed to be operational when the Administrator is ready to accept and post FCC Form 470 from schools and libraries on a website and that website is available for use by service providers.

(d)(1) The exemption from the competitive bid requirements set forth in paragraph (c) of this section shall not apply to voluntary extensions or renewals of existing contracts, with the exception that an eligible school or library as defined under § 54.501 or consortium that includes an eligible school or library, that filed an application within the 75-day initial filing window for 1998 (January 30, 1998–April 15, 1998), may voluntarily extend or renew, to a date no later than June 30, 1999, an existing contract that otherwise would terminate between April 15, 1998 and June 30, 1999.

(2) For the 1998–1999 funding year, a contract exempt from the competitive bid requirement, as described in paragraph (c) of this section, may be voluntarily extended to September 30, 1999 only to the extent necessary to permit delivery of the nonrecurring services

subject to that contract and for which discounts have been approved.

[62 FR 32948, June 17, 1997, as amended at 63 FR 2130, Jan. 13, 1998; 63 FR 33586, June 19, 1998; 63 FR 43097, Aug. 12, 1998; 63 FR 70572, Dec. 21, 1998; 64 FR 22810, Apr. 28, 1999]

### § 54.513 Resale.

(a) *Prohibition on resale.* Eligible services purchased at a discount under this subpart shall not be sold, resold, or transferred in consideration of money or any other thing of value.

(b) *Permissible fees.* This prohibition on resale shall not bar schools, school districts, libraries, and library consortia from charging either computer lab fees or fees for classes in how to navigate over the Internet. There is no prohibition on the resale of services that are not purchased pursuant to the discounts provided in this subpart.

### § 54.515 Distributing support.

(a) A telecommunications carrier providing services eligible for support under this subpart to eligible schools and libraries may, at the election of the carrier, treat the amount eligible for support under this subpart as an offset against the carrier's universal service contribution obligation for the year in which the costs for providing eligible services were incurred or receive a direct reimbursement from the Administrator for that amount. Carriers shall elect in January of each year the method by which they will be reimbursed and shall remain subject to that method for the duration of the calendar year. Any support amount that is owed a carrier that fails to remit its monthly universal service contribution obligation, however, shall first be applied as an offset to that carrier's contribution obligation. Such a carrier shall remain subject to the offsetting method for the remainder of the calendar year in which it failed to remit their monthly universal service obligation. A carrier that continues to be in arrears on its universal service contribution obligations at the end of a calendar year shall remain subject to the offsetting method for the next calendar year.

(b) If a telecommunications carrier elects to treat the amount eligible for support under this subpart as an offset against the carrier's universal service contribution obligation and the total amount of support owed to the carrier exceeds its universal service obligation, calculated on an annual basis, the carrier shall receive a direct reimbursement in the amount of the difference. Any such reimbursement due a carrier shall be submitted to that carrier no later than the end of the first quarter of the calendar year following the year in which the costs were incurred and the offset against the carrier's universal service obligation was applied.

[63 FR 67009, Dec. 4, 1998]

### § 54.516 Auditing.

(a) *Recordkeeping requirements.* Schools and libraries shall be required to maintain for their purchases of telecommunications and other supported services at discounted rates the kind of procurement records that they maintain for other purchases.

(b) *Production of records.* Schools and libraries shall produce such records at the request of any auditor appointed by a state education department, the Administrator, or any state or federal agency with jurisdiction.

(c) *Random audits.* Schools and libraries shall be subject to random compliance audits to evaluate what services they are purchasing and how such services are being used.

[62 FR 32948, June 17, 1997, as amended at 62 FR 41304, Aug. 1, 1997; 63 FR 70572, Dec. 21, 1998]

### § 54.517 Services provided by non-telecommunications carriers.

(a) Non-telecommunications carriers shall be eligible for universal service support under this subpart for providing the supported services described in paragraph (b) of this section for eligible schools, libraries, and consortia including those entities.

(b) *Supported services.* Non-telecommunications carriers shall be eligible for universal service support under this subpart for providing Internet access and installation and maintenance of internal connections.

(c) *Requirements.* Such services provided by non-telecommunications carriers shall be subject to all the provisions of this subpart, except §§ 54.501(a), 54.502, 54.503, 54.515.

[62 FR 32948, June 17, 1997, as amended at 63 FR 2131, Jan. 13, 1998]

### § 54.518 Support for wide area networks.

To the extent that states, schools, or libraries build or purchase a wide area network to provide telecommunications services, the cost of such wide area networks shall not be eligible for universal service discounts provided under this subpart.

[63 FR 2131, Jan. 13, 1998]

### § 54.519 State telecommunications networks.

(a) *Telecommunications services.* State telecommunications networks may secure discounts under the universal service support mechanisms on supported telecommunications services (as described in § 54.502) on behalf of eligible schools and libraries (as described in § 54.501) or consortia that include an eligible school or library. Such state telecommunications networks shall pass on such discounts to eligible schools and libraries and shall:

(1) Maintain records listing each eligible school and library and showing the basis for each eligibility determination;

(2) Maintain records demonstrating the discount amount to which each eligible school and library is entitled and the basis for such determination;

(3) Take reasonable steps to ensure that each eligible school or library receives a proportionate share of the shared services;

(4) Request that service providers apply the appropriate discount amounts on the portion of the supported services used by each school or library;

(5) Direct eligible schools and libraries to pay the discounted price; and

(6) Comply with the competitive bid requirements set forth in § 54.504(a).

(b) *Internet access and installation and maintenance of internal connections.* State telecommunications networks either may secure discounts on Internet access and installation and maintenance of internal connections in the manner described in paragraph (a) of this section with regard to telecommunications, or shall be eligible, consistent with § 54.517(b), to receive universal service support for providing such services to eligible schools, libraries, and consortia including those entities.

[63 FR 2131, Jan. 13, 1998; 63 FR 33586, June 19, 1998]

## Subpart G—Universal Service Support for Health Care Providers

### § 54.601 Eligibility.

(a) *Health care providers.* (1) Only an entity meeting the definition of ''health care provider'' as defined in this section shall be eligible to receive supported services under this subpart.

(2) For purposes of this subpart, a ''health care provider'' is any:

(i) Post-secondary educational institution offering health care instruction, including a teaching hospital or medical school;

(ii) Community health center or health center providing health care to migrants;

(iii) Local health department or agency;

(iv) Community mental health center;

(v) Not-for-profit hospital;

(vi) Rural health clinic; or

(vii) Consortium of health care providers consisting of one or more entities described in paragraphs (a)(2)(i) through (a)(2)(vi) of this section.

(3) Only public or non-profit health care providers shall be eligible to receive supported services under this subpart.

(4) Except with regard to those services provided under § 54.621, only a rural health care provider shall be eligible to receive supported services under this subpart. A ''rural health care provider'' is a health care provider located in a rural area, as defined in this part.

(5) Each separate site or location of a health care provider shall be considered an individual health care provider for purposes of calculating and limiting support under this subpart.

(b) *Consortia.* (1) An eligible health care provider may join a consortium

with other eligible health care providers; with schools, libraries, and library consortia eligible under Subpart F; and with public sector (governmental) entities to order telecommunications services. With one exception, eligible health care providers participating in consortia with ineligible private sector members shall not be eligible for supported services under this subpart. A consortium may include ineligible private sector entities if such consortium is only receiving services at tariffed rates or at market rates from those providers who do not file tariffs.

(2) For consortia, universal service support under this subpart shall apply only to the portion of eligible services used by an eligible health care provider.

(3) Telecommunications carriers, health care providers, and consortia of health care providers shall carefully maintain complete records of how they allocate the costs of shared facilities among consortium participants in order to charge eligible health care providers the correct amounts. Such records shall be available for public inspection.

(4) Telecommunications carriers, health care providers, and consortia of health care providers shall calculate and justify with supporting documentation the amount of support for which each member of a consortium is eligible.

(c) *Services.*

(1) Any telecommunications service that is the subject of a properly completed bona fide request by a rural health care provider shall be eligible for universal service support, subject to the limitations described in this paragraph. The length of a supported telecommunications service may not exceed the distance between the health care provider and the point farthest from that provider on the jurisdictional boundary of the nearest large city as defined in § 54.605(c).

(2) Limited toll-free access to an Internet service provider shall be eligible for universal service support under § 54.621.

[62 FR 32948, June 17, 1997, as amended at 64 FR 66787, Nov. 30, 1999]

**§ 54.603 Competitive bid requirements.**

(a) *Competitive bidding requirement.* To select the telecommunications carriers that will provide services eligible for universal service support to it under this subpart, each eligible health care provider shall participate in a competitive bidding process pursuant to the requirements established in this subpart and any additional and applicable state, local, or other procurement requirements.

(b) *Posting of FCC Form 465.* (1) An eligible health care provider seeking to receive telecommunications services eligible for universal service support under this subpart shall submit a completed FCC Form 465 to the Rural Health Care Corporation. FCC Form 465 shall be signed by the person authorized to order telecommunications services for the health care provider and shall include, at a minimum, that person's certification under oath that:

(i) The requester is a public or nonprofit entity that falls within one of the seven categories set forth in the definition of health care provider, listed in § 54.601(a);

(ii) The requester is physically located in a rural area, unless the health care provider is requesting services provided under § 54.621;

(iii) If the health care provider is requesting services provided under § 54.621, that the requester cannot obtain toll-free access to an Internet service provider;

(iv) The requested service or services will be used solely for purposes reasonably related to the provision of health care services or instruction that the health care provider is legally authorized to provide under the law in the state in which such health care services or instruction are provided;

(v) The requested service or services will not be sold, resold or transferred in consideration of money or any other thing of value; and

(vi) If the service or services are being purchased as part of an aggregated purchase with other entities or individuals, the full details of any such arrangement, including the identities of all co-purchasers and the portion of the service or services being purchased by the health care provider.

(2) The Rural Health Care Corporation shall post each FCC Form 465 that it receives from an eligible health care provider on its website designated for this purpose.

(3) After posting an eligible health care providers FCC Form 465 on the Rural Health Care Corporation website, the Rural Health Care Corporation shall send confirmation of the posting to the entity requesting services. The health care provider shall wait at least 28 days from the date on which its FCC Form 465 is posted on the website before making commitments with the selected telecommunications carrier(s).

(4) After selecting a telecommunications carrier, the health care provider shall certify to the Rural Health Care Corporation that the provider is selecting the most cost-effective method of providing the requested service or services, where the most cost-effective method of providing a service is defined as the method that costs the least after consideration of the features, quality of transmission, reliability, and other factors that the health care provider deems relevant to choosing a method of providing the required health care services. The health care provider shall submit to the Administrator paper copies of the responses or bids received in response to the requested services.

(5) The confirmation from the Rural Health Care Corporation shall include the date after which the requester may sign a contract with its chosen telecommunications carrier(s).

[62 FR 32948, June 17, 1997, as amended at 62 FR 41304, Aug. 1, 1997; 63 FR 2131, Jan. 13, 1998]

EDITORIAL NOTE: At 63 FR 70572, Dec. 21, 1998, § 54.603(a)(1) through (5) was amended by changing the words ''Rural Health Care Corporation'' to ''Administrator'', however, (a)(1) through (5) did not exist in the 1998 edition of this volume.

### § 54.604 Existing contracts.

(a) *Existing contracts.* A signed contract for services eligible for support pursuant to this subpart between an eligible health care provider as defined under § 54.601 and a telecommunications carrier shall be exempt from the competitive bid requirements set forth in § 54.603(a) as follows:

(1) A contract signed on or before July 10, 1997 is exempt from the competitive bid requirement for the life of the contract; or

(2) A contract signed after July 10, 1997 but before the date on which the universal service competitive bid system described in § 54.603 is operational is exempt from the competitive bid requirements only with respect to services that will be provided under such contract between January 1, 1998 and December 31, 1998.

(b) For rural health care providers that take service under or pursuant to a master contract, as defined in § 54.500(f), the date of execution of that master contract represents the applicable date for purposes of determining whether and to what extent the rural health care provider is exempt from the competitive bid requirements.

(c) The competitive bid system will be deemed to be operational when the Administrator is ready to accept and post FCC Form 465 from rural health care providers on a website and that website is available for use by telecommunications carriers.

(d) The exemption from competitive bid requirements set forth in paragraph (a) of this section shall not apply to voluntary extensions or renewals of existing contracts, except to the extent that an eligible rural health care provider as defined in § 54.601 or consortium that includes an eligible health care provider, and that filed an application within the 75-day initial filing window for 1998 (May 1, 1998—July 14, 1998), may voluntarily extend or renew, to a date no later than June 30, 1999, an existing contract that otherwise would terminate between July 14, 1998 and June 30, 1999.

[63 FR 2131, Jan. 13, 1998; 63 FR 33586, June 19, 1998, as amended at 63 FR 70572, Dec. 21, 1998; 64 FR 22810, Apr. 28, 1999]

### § 54.605 Determining the urban rate.

(a) If a rural health care provider requests an eligible service to be provided over a distance that is less than or equal to the ''standard urban distance,'' as defined in paragraph (d) of this section, for the state in which it is located, the urban rate for that service shall be a rate no higher than the highest tariffed or publicly-available rate

charged to a commercial customer for a similar service provided over the same distance in the nearest large city in the state, calculated as if it were provided between two points within the city.

(b) If a rural health care provider requests an eligible service to be provided over a distance that is greater than the ''standard urban distance'' for the state in which it is located, the urban rate shall be no higher than the highest tariffed or publicly-available rate charged to a commercial customer for a similar service provided over the standard urban distance in the nearest large city in the state, calculated as if the service were provided between two points within the city.

(c) The ''nearest large city'' is the city located in the eligible health care provider's state, with a population of at least 50,000, that is nearest to the health care provider's location, measured point to point, from the health care provider's location to the point on that city's jurisdictional boundary closest to the health care provider's location.

(d) The ''standard urban distance'' for a state is the average of the longest diameters of all cities with a population of 50,000 or more within the state.

(e) The Administrator shall calculate the ''standard urban distance'' and shall post the ''standard urban distance'' and the maximum supported distance for each state on its website.

[62 FR 32948, June 17, 1997, as amended at 63 FR 2131, Jan. 13, 1998; 63 FR 70572, Dec. 21, 1998]

### § 54.607 Determining the rural rate.

(a) The rural rate shall be the average of the rates actually being charged to commercial customers, other than health care providers, for identical or similar services provided by the telecommunications carrier providing the service in the rural area in which the health care provider is located. The rates included in this average shall be for services provided over the same distance as the eligible service. The rates averaged to calculate the rural rate must not include any rates reduced by universal service support mechanisms. The ''rural rate'' shall be used as described in this subpart to determine the credit or reimbursement due to a telecommunications carrier that provides eligible telecommunications services to eligible health care providers.

(b) If the telecommunications carrier serving the health care provider is not providing any identical or similar services in the rural area, then the rural rate shall be the average of the tariffed and other publicly available rates, not including any rates reduced by universal service programs, charged for the same or similar services in that rural area over the same distance as the eligible service by other carriers. If there are no tariffed or publicly available rates for such services in that rural area, or if the carrier reasonably determines that this method for calculating the rural rate is unfair, then the carrier shall submit for the state commission's approval, for intrastate rates, or the Commission's approval, for interstate rates, a cost-based rate for the provision of the service in the most economically efficient, reasonably available manner.

(1) The carrier must provide, to the state commission, or intrastate rates, or to the Commission, for interstate rates, a justification of the proposed rural rate, including an itemization of the costs of providing the requested service.

(2) The carrier must provide such information periodically thereafter as required, by the state commission for intrastate rates or the Commission for interstate rates. In doing so, the carrier must take into account anticipated and actual demand for telecommunications services by all customers who will use the facilities over which services are being provided to eligible health care providers.

### § 54.609 Calculating support.

(a) Except with regard to services provided under § 54.621 and subject to the limitations set forth in this subpart, the amount of universal service support for an eligible service provided to a rural health care provider shall be the difference, if any, between the urban rate and the rural rate charged for the service, as defined herein. In addition, all reasonable charges that are incurred by taking such services, such

as state and federal taxes shall be eligible for universal service support. Charges for termination liability, penalty surcharges, and other charges not included in the cost of taking such service shall not be covered by the universal service support mechanisms.

(1) With one exception, the Administrator shall consider the base rates for telecommunications services elements in rural areas to be reasonably comparable to the base rates charged for similar telecommunications service elements in urban areas in that state, and, therefore, the Administrator shall not include these charges in calculating the support. The Administrator shall include, in the support calculation, all other charges specified, and all actual distance-based charges as follows:

(i) If the requested service distance is less than or equal to the SUD for the state, the distance-based charge for that service can be no higher than the distance-based charged for a similar service over the same distance in the large city nearest to the rural health care provider;

(ii) If the requested service distance is greater than the SUD for the state, but less than the maximum allowable distance, the distance-based charge for that service can be no higher than the distance-based charged for a similar service in the large city nearest to the rural health care provider over the SUD.

(iii) ''Distance-based charges'' are charges based on a unit of distance, such as mileage-based charges.

(iv) Except with regard to services provided under § 54.621, a telecommunications carrier that provides telecommunications service to a rural health care provider participating in an eligible health care consortium, and the consortium must establish the actual distance-based charges for the health care provider's portion of the shared telecommunications services.

(2) If a telecommunications carrier, health care provider, and/or consortium of health care providers reasonably determines that the base rates for telecommunications services elements in rural areas are *not* reasonably comparable to the base rates charged for similar telecommunications service elements in urban areas in that state, the telecommunications carrier, health care provider, and/or consortium of health care providers may request that the Administrator perform a more comprehensive support calculation. The requester shall provide to the Administrator the information to establish both the urban and rural rates consistent with § 54.605 and § 54.607, and submit to the Administrator all of the documentation necessary to substantiate the request.

(i) Except with regard to services provided under § 54.621, a telecommunications carrier that provides telecommunications service to a rural health care provider participating in an eligible health care consortium, and the consortium must establish the applicable rural base rates for telecommunications service elements for the health care provider's portion of the shared telecommunications services, as well as the applicable urban base rates for the telecommunications service elements.

(b) Absent documentation justifying the amount of universal service support requested for health care providers participating in a consortium, the Administrator shall not allow telecommunications carriers to offset, or receive reimbursement for, the amount eligible for universal service support.

(c) The universal service support mechanisms shall provide support for intrastate telecommunications services, as set forth in § 54.101 paragraph (a), provided to rural health care providers as well as interstate telecommunications services.

[62 FR 32948, June 17, 1997, as amended at 62 FR 41305, Aug. 1, 1997; 63 FR 2131, Jan. 13, 1998; 63 FR 70572, Dec. 21, 1998; 64 FR 66787, Nov. 30, 1999]

### § 54.611 Distributing support.

(a) A telecommunications carrier providing services eligible for support under this subpart to eligible health care providers shall treat the amount eligible for support under this subpart as an offset against the carrier's universal service support obligation for the year in which the costs for providing eligible services were incurred.

(b) If the total amount of support owed to a carrier, as set forth in paragraph (a) of this section, exceeds its universal service obligation, calculated on an annual basis, the carrier may receive a direct reimbursement in the amount of the difference.

(c) Any reimbursement due a carrier shall be made after the offset is credited against that carrier's universal service obligation.

(d) Any reimbursement due a carrier shall be submitted to that carrier no later than the end of the first quarter of the calendar year following the year in which the costs were incurred and the offset against the carrier's universal service obligation was applied.

### § 54.613 Limitations on supported services for rural health care providers.

(a) Upon submitting a bona fide request to a telecommunications carrier, each eligible rural health care provider is entitled to receive the most cost-effective, commercially-available telecommunications service at a rate no higher than the highest urban rate, as defined in this paragraph, at a distance not to exceed the distance between the eligible health care provider's site and the farthest point from that site that is on the jurisdictional boundary of the nearest large city, as defined in § 54.605(c).

(b) This section shall not affect a rural health care provider's ability to obtain supported services under § 54.621.

[64 FR 66787, NOV. 30, 1999]

### § 54.615 Obtaining services.

(a) *Selecting a provider.* In selecting a telecommunications carrier, a health care provider shall consider all bids submitted and select the most cost-effective alternative.

(b) *Receiving supported rate.* Except with regard to services provided under § 54.621, upon receiving a bona fide request for an eligible service from an eligible health care provider, as set forth in paragraph (c) of this section, a telecommunications carrier shall provide the service at a rate no higher than the urban rate, as defined in § 54.605, subject to the limitations set forth in this Subpart.

(c) *Bona fide request.* In order to receive services eligible for universal service support under this subpart, an eligible health care provider must submit a request for services to the telecommunications carrier, Signed by an authorized officer of the health care provider, and shall include that person's certification under oath that:

(1) The requester is a public or nonprofit entity that falls within one of the seven categories set forth in the definition of health care provider, listed in § 54.601(a);

(2) The requester is physically located in a rural area, unless the health care provider is requesting services provided under § 54.621;

(3) If the health care provider is requesting services provided under § 54.621, that the requester cannot obtain toll-free access to an Internet service provider;

(4) The requested service or services will be used solely for purposes reasonably related to the provision of health care services or instruction that the health care provider is legally authorized to provide under the law in the state in which such health care services or instruction are provided;

(5) The requested service or services will not be sold, resold or transferred in consideration of money or any other thing of value;

(6) If the service or services are being purchased as part of an aggregated purchase with other entities or individuals, the full details of any such arrangement, including the identities of all co-purchasers and the portion of the service or services being purchased by the health care provider; and

(7) The requester is selecting the most cost-effective method of providing the requested service or services, where the most cost-effective method of providing a service is defined as the method that costs the least after consideration of the features, quality of transmission, reliability, and other factors that the health care provider deems relevant to choosing a method of providing the required health care services.

(d) *Annual renewal.* The certification set forth in paragraph (c) of this section shall be renewed annually.

### § 54.617 Resale.

(a) *Prohibition on resale.* Services purchased pursuant to universal service support mechanisms under this subpart shall not be sold, resold, or transferred in consideration for money or any other thing of value.

(b) *Permissible fees.* The prohibition on resale set forth in paragraph (a) of this section shall not prohibit a health care provider from charging normal fees for health care services, including instruction related to such services rendered via telecommunications services purchased under this subpart.

### § 54.619 Audit program.

(a) *Recordkeeping requirements.* Health care providers shall maintain for their purchases of services supported under this subpart the same kind of procurement records that they maintain for other purchases.

(b) *Production of records.* Health care providers shall produce such records at the request of any auditor appointed by the Administrator or any other state or federal agency with jurisdiction.

(c) *Random audits.* Health care providers shall be subject to random compliance audits to ensure that requesters are complying with the certification requirements set forth in § 54.615(c) and are otherwise eligible to receive universal service support and that rates charged comply with the statute and regulations.

(d) *Annual report.* The Administrator shall use the information obtained under paragraph (a) of this section to evaluate the effects of the regulations adopted in this subpart and shall report its findings to the Commission on the first business day in May of each year.

[62 FR 32948, June 17, 1997, as amended at 63 FR 2132, Jan. 13, 1998; 63 FR 70572, Dec. 21, 1998]

### § 54.621 Access to advanced telecommunications and information services.

Each eligible health care provider that cannot obtain toll-free access to an Internet service provider shall be entitled to receive the lesser of the toll charges incurred for 30 hours of access per month to an Internet service provider or $180 per month in toll charge credits for toll charges imposed for connecting to an Internet service provider.

[64 FR 62123, Nov. 16, 1999]

### § 54.623 Cap.

(a) *Amount of the annual cap.* The annual cap on federal universal service support for health care providers shall be $400 million per funding year, with the following exceptions. No more than $3 million shall be collected or spent per quarter for the third and fourth quarters of 1999 and the first and second quarters of 2000 for the rural health care universal service support mechanism. No more than $12 million shall be committed or disbursed during the twelve month period from July 1, 1999 through June 30, 2000.

(b) *Funding year.* A funding year for purposes of the health care providers cap shall be the period July 1 through June 30. For the initiation of the mechanism only, the eighteen month period from January 1, 1998 to June 30, 1999 shall be considered a funding year. Eligible health care providers filing applications within the initial 75-day filing window shall receive funding for requested services through June 30, 1999.

(c) *Requests.* Funds shall be available as follows:

(1) Generally, funds shall be available to eligible health care providers on a first-come-first-served basis, with requests accepted beginning on the first of January prior to each funding year.

(2) For the initial funding year, the Administrator shall implement an initial filing period that treats all health care providers filing within that period as if they were simultaneously received. The initial filing period shall begin on the date that the Administrator begins to receive applications for support, and shall conclude on a date to be determined by the Administrator.

(3) For the second funding year, which will begin on July 1, 1999, the Administrator shall implement a filing period that treats all health care providers filing within that period as if they were simultaneously received. The initial filing period shall begin on the date that the Administrator begins to receive applications for support, and

shall conclude on a date to be determined by the Administrator.

(4) The Administrator may implement such additional filing periods as it deems necessary.

(d) *Annual filing requirement.* Health care providers shall file new funding requests for each funding year.

(e) *Long term contracts.* If health care providers enter into long term contracts for eligible services, the Administrator shall only commit funds to cover the portion of such a long term contract scheduled to be delivered during the funding year for which universal service support is sought.

(f) *Pro-rata reductions.* Administrator shall act in accordance with this paragraph when a filing period described in paragraph (c) of this section is in effect. When a filing period described in paragraph (c) of this section closes, Administrator shall calculate the total demand for support submitted by all applicants during the filing window. If the total demand exceeds the total support available for the funding year, Administrator shall take the following steps:

(1) Administrator shall divide the total funds available for the funding year by the total amount of support requested to produce a pro-rata factor.

(2) Administrator shall calculate the amount of support requested by each applicant that has filed during the filing window.

(3) Administrator shall multiply the pro-rata factor by the total dollar amount requested by each applicant. Administrator shall then commit funds to each applicant consistent with this calculation.

[62 FR 32948, June 17, 1997, as amended at 62 FR 56120, Oct. 29, 1997; 63 FR 2132, Jan. 13, 1998; 63 FR 3832, Jan. 27, 1998; 63 FR 43097, Aug. 12, 1998; 63 FR 70572, Dec. 21, 1998; 64 FR 2594, Jan. 15, 1999; 64 FR 30442, June 8, 1999]

### § 54.625 Support for services beyond the maximum supported distance for rural health care providers.

(a) The maximum support distance is the distance from the health care provider to the farthest point on the boundary of the nearest large city, as calculated by the Administrator.

(b) An eligible rural health care provider may purchase an eligible telecommunications service, as defined in § 54.601(c)(1) through (c)(2), that is provided over a distance that exceeds the maximum supported distance.

(c) If an eligible rural health care provider purchases an eligible telecommunications service, as defined in § 54.601(c)(1) through (c)(2), that exceeds the maximum supported distance, the health care provider must pay the applicable rural rate for the distance that such service is carried beyond the maximum supported distance.

[63 FR 2132, Jan. 13, 1998, as amended at 63 FR 70572, Dec. 21, 1998]

## Subpart H—Administration

### § 54.701 Administrator of universal service support mechanisms.

(a) The Universal Service Administrative Company is appointed the permanent Administrator of the federal universal service support mechanisms, subject to a review after one year by the Federal Communications Commission to determine that the Administrator is administering the universal service support mechanisms in an efficient, effective, and competitively neutral manner.

(b) The Schools and Libraries Corporation and the Rural Health Care Corporation shall merge into the Universal Service Administrative Company by January 1, 1999; provided, however, that the merger shall not take place until the Common Carrier Bureau, acting pursuant to delegated authority, has approved the merger documents, the amended by-laws, and the amended articles of incorporation, as set forth in paragraphs (c) and (d) of this section.

(c) By December 1, 1998, the Schools and Libraries Corporation, the Rural Health Care Corporation and the Universal Service Administrative Company shall file with the Federal Communications Commission draft copies of all documents necessary to effectuate the merger.

(d) By December 1, 1998, the Universal Service Administrative Company shall file with the Federal Communications Commission draft copies of amended by-laws and amended articles of incorporation.

(e) Upon consummation of the merger of the Schools and Libraries Corporation and the Rural Health Care Corporation into the Universal Service Administrative Company, the Schools and Libraries Corporation and the Rural Health Care Corporation shall take all steps necessary to dissolve such corporations.

(f) The Administrator shall establish a nineteen (19) member Board of Directors, as set forth in § 54.703. The Administrator's Board of Directors shall establish three Committees of the Board of Directors, as set forth in § 54.705: (1) the Schools and Libraries Committee, which shall oversee the schools and libraries support mechanism; (2) the Rural Health Care Committee, which shall oversee the rural health care support mechanism; and (3) the High Cost and Low Income Committee, which shall oversee the high cost and low income support mechanism. The Board of Directors shall not modify substantially the power or authority of the Committees of the Board without prior approval from the Federal Communications Commission.

(g)(1) The Administrator shall establish three divisions:

(i) The Schools and Libraries Division, which shall perform duties and functions in connection with the schools and libraries support mechanism under the direction of the Schools and Libraries Committee of the Board, as set forth in § 54.705(a);

(ii) The Rural Health Care Division, which shall perform duties and functions in connection with the rural health care support mechanism under the direction of the Rural Health Care Committee of the Board, as set forth in § 54.705(b); and

(iii) The High Cost and Low Income Division, which shall perform duties and functions in connection with the high cost and low income support mechanism, and the interstate access universal service support mechanism described in subpart J of this part, under the direction of the High Cost and Low Income Committee of the Board, as set forth in § 54.705(c).

(2) As directed by the Committees of the Board set forth in § 54.705, these divisions shall perform the duties and functions unique to their respective support mechanisms.

(h) The Administrator shall be managed by a Chief Executive Officer, as set forth in § 54.704. The Chief Executive Officer shall serve on the Committees of the Board established in § 54.705.

[63 FR 70572, Dec. 21, 1998, as amended at 65 FR 38689, June 21, 2000; 65 FR 57739, Sept. 26, 2000]

### § 54.702 Administrator's functions and responsibilities.

(a) The Administrator, and the divisions therein, shall be responsible for administering the schools and libraries support mechanism, the rural health care support mechanism, the high cost support mechanism, the low income support mechanism, and the interstate access universal service support mechanism described in subpart J of this part.

(b ) The Administrator shall be responsible for billing contributors, collecting contributions to the universal service support mechanisms, and disbursing universal service support funds.

(c) The Administrator may not make policy, interpret unclear provisions of the statute or rules, or interpret the intent of Congress. Where the Act or the Commission's rules are unclear, or do not address a particular situation, the Administrator shall seek guidance from the Commission.

(d) The Administrator may advocate positions before the Commission and its staff only on administrative matters relating to the universal service support mechanisms.

(e) The Administrator shall maintain books of account separate from those of the National Exchange Carrier Association, of which the Administrator is an independent subsidiary. The Administrator's books of account shall be maintained in accordance with generally accepted accounting principles. The Administrator may borrow start up funds from the National Exchange Carrier Association. Such funds may not be drawn from the Telecommunications Relay Services (TRS) fund or TRS administrative expense accounts.

(f) Pursuant to its responsibility for billing and collecting contributions,

the Administrator shall compare periodically information collected by the administrator of the TRS Fund from TRS Fund Worksheets with information submitted by contributors on Universal Service Worksheets to verify the accuracy of information submitted on Universal Service Worksheets. When performing a comparison of contributor information as provided by this paragraph, the Administrator must undertake company-by-company comparisons for all entities filing Universal Service and TRS Fund Worksheets.

(g) The Administrator shall create and maintain a website, as defined in § 54.5, on which applications for services will be posted on behalf of schools, libraries and rural health care providers.

(h) The Administrator shall file with the Commission and Congress an annual report by March 31 of each year. The report shall detail the Administrator's operations, activities, and accomplishments for the prior year, including information about participation in each of the universal service support mechanisms and administrative action intended to prevent waste, fraud, and abuse. The report also shall include an assessment of subcontractors' performance, and an itemization of monthly administrative costs that shall include all expenses, receipts, and payments associated with the administration of the universal service support programs. The Administrator shall consult each year with Commission staff to determine the scope and content of the annual report.

(i) The Administrator shall report quarterly to the Commission on the disbursement of universal service support program funds. The Administrator shall keep separate accounts for the amounts of money collected and disbursed for eligible schools and libraries, rural health care providers, low-income consumers, interstate access universal service support, and high-cost and insular areas.

(j) Information based on the Administrator's reports will be made public by the Commission at least once a year as part of a Monitoring Report.

(k) The Administrator shall provide the Commission full access to the data collected pursuant to the administration of the universal service support programs.

(l) Pursuant to § 64.903 of this chapter, the Administrator shall file with the Commission a cost allocation manual (CAM) that describes the accounts and procedures the Administrator will use to allocate the shared costs of administering the universal service support mechanisms and its other operations.

(m) The Administrator shall make available to whomever the Commission directs, free of charge, any and all intellectual property, including, but not limited to, all records and information generated by or resulting from its role in administering the support mechanisms, if its participation in administering the universal service support mechanisms ends.

(n) If its participation in administering the universal service support mechanisms ends, the Administrator shall be subject to close-out audits at the end of its term.

[63 FR 70573, Dec. 21, 1998, as amended at 65 FR 38690, June 21, 2000; 65 FR 57739, Sept. 26, 2000]

### § 54.703 The Administrator's Board of Directors.

(a) The Administrator shall have a Board of Directors separate from the Board of Directors of the National Exchange Carrier Association. The National Exchange Carrier Association's Board of Directors shall be prohibited from participating in the functions of the Administrator.

(b) *Board composition*. The independent subsidiary's Board of Directors shall consist of nineteen (19) directors:

(1) Three directors shall represent incumbent local exchange carriers, with one director representing the Bell Operating Companies and GTE, one director representing ILECs (other than the Bell Operating Companies) with annual operating revenues in excess of $40 million, and one director representing ILECs (other than the Bell Operating Companies) with annual operating revenues of $40 million or less;

(2) Two directors shall represent interexchange carriers, with one director representing interexchange carriers

with more than $3 billion in annual operating revenues and one director representing interexchange carriers with annual operating revenues of $3 billion or less;

(3) One director shall represent commercial mobile radio service (CMRS) providers;

(4) One director shall represent competitive local exchange carriers;

(5) One director shall represent cable operators;

(6) One director shall represent information service providers;

(7) Three directors shall represent schools that are eligible to receive discounts pursuant to § 54.501;

(8) One director shall represent libraries that are eligible to receive discounts pursuant to § 54.501;

(9) Two directors shall represent rural health care providers that are eligible to receive supported services pursuant to § 54.601;

(10) One director shall represent low-income consumers;

(11) One director shall represent state telecommunications regulators;

(12) One director shall represent state consumer advocates; and

(13) The Chief Executive Officer of the Administrator.

(c) *Selection process for board of directors.* (1) Sixty (60) days prior to the expiration of a director's term, the industry or non-industry group that is represented by such director on the Administrator's Board of Directors, as specified in paragraph (b) of this section, shall nominate by consensus a new director. The industry or non-industry group shall submit the name of its nominee for a seat on the Administrator's Board of Directors, along with relevant professional and biographical information about the nominee, to the Chairman of the Federal Communications Commission. Only members of the industry or non-industry group that a Board member will represent may submit a nomination for that position.

(2) The name of an industry or non-industry group's nominee shall be filed with the Office of the Secretary of the Federal Communications Commission in accordance with part 1 of this chapter. The document nominating a candidate shall be captioned ''In the matter of: Nomination for Universal Service Administrator's Board of Directors'' and shall reference FCC Docket Nos. 97–21 and 96–45. Each nomination shall specify the position on the Board of Directors for which such nomination is submitted. Two copies of the document nominating a candidate shall be submitted to the Common Carrier Bureau's Accounting Policy Division.

(3) The Chairman of the Federal Communications Commission shall review the nominations submitted by industry and non-industry groups and select each director of the Administrator's Board of Directors, as each director's term expires pursuant to paragraph (d) of this section. If an industry or non-industry group does not reach consensus on a nominee or fails to submit a nomination for a position on the Administrator's Board of Directors, the Chairman of the Federal Communications Commission shall select an individual to represent such group on the Administrator's Board of Directors.

(d) *Board member terms.* The directors on the Administrator's Board shall be appointed for three-year terms, except that the Chief Executive Officer shall be a permanent member of the Board. Board member terms shall run from January 1 of the first year of the term to December 31 of the third year of the term, except that, for purposes of the term beginning on January 1, 1999, the terms of six directors shall expire on December 31, 2000, the terms of another six directors on December 31, 2001, and the terms of the remaining six directors on December 31, 2002. Directors may be reappointed for subsequent terms pursuant to the initial nomination and appointment process described in paragraph (c) of this section. If a Board member vacates his or her seat prior to the completion of his or her term, the Administrator will notify the Common Carrier Bureau of such vacancy, and a successor will be chosen pursuant to the nomination and appointment process described in paragraph (c) of this section.

(e) All meetings of the Administrator's Board of Directors shall be open to the public and held in Washington, D.C.

(f) Each member of the Administrator's Board of Directors shall be entitled to receive reimbursement for expenses directly incurred as a result of his or her participation on the Administrator's Board of Directors.

[63 FR 70573, Dec. 21, 1998]

EFFECTIVE DATE NOTE: At 63 FR 70573, Dec. 21, 1998, § 54.703 was revised. Paragraph (c) contains modified information collection requirements and will not become effective until approved by the Office of Management and Budget.

### § 54.704 The Administrator's Chief Executive Officer.

(a) *Chief Executive Officer's functions.* (1) The Chief Executive Officer shall have management responsibility for the administration of the federal universal service support mechanisms.

(2) The Chief Executive Officer shall have management responsibility for all employees of the Universal Service Administrative Company. The Chief Executive Officer may delegate such responsibility to heads of the divisions established in § 54.701(g).

(3) The Chief Executive Officer shall serve on the Administrator's Board of Directors as set forth in § 54.703(b) and on the Committees of the Board established under § 54.705.

(b) *Selection process for the Chief Executive Officer.* (1) The members of the Board of Directors of the Administrator shall nominate by consensus a Chief Executive Officer. The Board of Directors shall submit the name of its nominee for Chief Executive Officer, along with relevant professional and biographical information about the nominee, to the Chairman of the Federal Communications Commission.

(2) The Chairman of the Federal Communications Commission shall review the nomination submitted by the Administrator's Board of Directors. Subject to the Chairman's approval, the nominee shall be appointed as the Administrator's Chief Executive Officer.

(3) If the Board of Directors does not reach consensus on a nominee or fails to submit a nomination for the Chief Executive Officer, the Chairman of the Federal Communications Commission shall select a Chief Executive Officer.

[63 FR 70574, Dec. 21, 1998]

### § 54.705 Committees of the Administrator's Board of Directors.

(a) *Schools and Libraries Committee.*—(1) *Committee functions.* The Schools and Libraries Committee shall oversee the administration of the schools and libraries support mechanism by the Schools and Libraries Division. The Schools and Libraries Committee shall have the authority to make decisions concerning:

(i) How the Administrator projects demand for the schools and libraries support mechanism;

(ii) Development of applications and associated instructions as needed for the schools and libraries support mechanism;

(iii) Administration of the application process, including activities to ensure compliance with Federal Communications Commission rules and regulations;

(iv) Performance of outreach and education functions;

(v) Review of bills for services that are submitted by schools and libraries;

(vi) Monitoring demand for the purpose of determining when the $2 billion trigger has been reached;

(vii) Implementation of the rules of priority in accordance with § 54.507(g) of this chapter;

(viii) Review and certification of technology plans when a state agency has indicated that it will not be able to review such plans within a reasonable time;

(ix) The classification of schools and libraries as urban or rural and the use of the discount matrix established in § 54.505(c) of this chapter to set the discount rate to be applied to services purchased by eligible schools and libraries;

(x) Performance of audits of beneficiaries under the schools and libraries support mechanism; and

(xi) Development and implementation of other functions unique to the schools and libraries support mechanism.

(2) *Committee composition.* The Schools and Libraries Committee shall consist of the following members of the Administrator's Board of Directors:

(i) Three school representatives;

(ii) One library representative;

(iii) One service provider representative;

(iv) One at-large representative elected by the Administrator's Board of Directors; and

(v) The Administrator's Chief Executive Officer.

(b) *Rural Health Care Committee.*—(1) *Committee functions.* The Rural Health Care Committee shall oversee the administration of the rural health care support mechanism by the Rural Health Care Division. The Rural Health Care Committee shall have authority to make decisions concerning:

(i) How the Administrator projects demand for the rural health care support mechanism;

(ii) Development of applications and associated instructions as needed for the rural health care support mechanism;

(iii) Administration of the application process, including activities to ensure compliance with Federal Communications Commission rules and regulations;

(iv) Calculation of support levels under § 54.609;

(v) Performance of outreach and education functions;

(vi) Review of bills for services that are submitted by rural health care providers;

(vii) Monitoring demand for the purpose of determining when the $400 million cap has been reached;

(viii) Performance of audits of beneficiaries under the rural health care support mechanism; and

(ix) Development and implementation of other functions unique to the rural health care support mechanism.

(2) *Committee composition.* The Rural Health Care Committee shall consist of the following members of the Administrator's Board of Directors:

(i) Two rural health care representatives;

(ii) One service provider representative;

(iii) Two at-large representatives elected by the Administrator's Board of Directors;

(iv) One State telecommunications regulator, one state consumer advocate; and

(v) The Administrator's Chief Executive Officer.

(c) *High Cost and Low Income Committee*—(1) *Committee functions.* The High Cost and Low Income Committee shall oversee the administration of the high cost and low income support mechanisms and the interstate access universal service support mechanism described in subpart J of this Part, by the High Cost and Low Income Division. The High Cost and Low Income Committee shall have the authority to make decisions concerning:

(i) How the Administrator projects demand for the high cost, low income, and interstate access universal service support mechanisms;

(ii) Development of applications and associated instructions as needed for the high cost, low income, and interstate access universal service support mechanisms;

(iii) Administration of the application process, including activities to ensure compliance with Federal Communications Commission rules and regulations;

(iv) Performance of audits of beneficiaries under the high cost, low income, and interstate access universal service support mechanisms and;

(v) Development and implementation of other functions unique to the high cost, low income, and interstate access universal service support mechanisms.

(d) *Binding Authority of Committees of the Board.*

(1) Any action taken by the Committees of the Board established in paragraphs (a) through (c) of this section shall be binding on the Board of Directors of the Administrator, unless such action is presented for review to the Board by the Administrator's Chief Executive Officer and the Board disapproves of such action by a two-thirds vote of a quorum of directors, as defined in the Administrator's by-laws.

(2) The budgets prepared by each Committee shall be subject to Board review as part of the Administrator's combined budget. The Board shall not modify the budgets prepared by the Committees of the Board unless such modification is approved by a two-thirds vote of a quorum of the Board,

as defined in the Administrator's bylaws.

[63 FR 70574, Dec. 21, 1998, as amended at 65 FR 38690, June 21, 2000; 65 FR 57739, Sept. 26, 2000]

### § 54.706 Contributions.

(a) Entities that provide interstate telecommunications to the public, or to such classes of users as to be effectively available to the public, for a fee will be considered telecommunications carriers providing interstate telecommunications services and must contribute to the universal service support programs. Interstate telecommunications include, but are not limited to:

(1) Cellular telephone and paging services;
(2) Mobile radio services;
(3) Operator services;
(4) Personal communications services (PCS);
(5) Access to interexchange service;
(6) Special access service;
(7) WATS;
(8) Toll-free service;
(9) 900 service;
(10) Message telephone service (MTS);
(11) Private line service;
(12) Telex;
(13) Telegraph;
(14) Video services;
(15) Satellite service;
(16) Resale of interstate services; and
(17) Payphone services.

(b) Except as provided in paragraph (c) of this section, every telecommunications carrier that provides interstate telecommunications services, every provider of interstate telecommunications that offers telecommunications for a fee on a non-common carrier basis, and every payphone provider that is an aggregator shall contribute to the federal universal service support mechanisms on the basis of its interstate and international end-user telecommunications revenues.

(c) Any entity required to contribute to the federal universal service support mechanisms whose interstate end-user telecommunications revenues comprise less than 8 percent of its combined interstate and international end-user telecommunications revenues shall contribute to the federal universal service support mechanisms for high cost areas, low-income consumers, schools and libraries, and rural health care providers based only on such entity's interstate end-user telecommunications revenues. For purposes of this paragraph, an ''entity'' shall refer to the entity that is subject to the universal service reporting requirements in 47 CFR 54.711 and shall include all of that entity's affiliated providers of telecommunications services.

(d) Entities providing open video systems (OVS), cable leased access, or direct broadcast satellite (DBS) services are not required to contribute on the basis of revenues derived from those services. The following entities will not be required to contribute to universal service: non-profit health care providers; broadcasters; systems integrators that derive less than five percent of their systems integration revenues from the resale of telecommunications.

[63 FR 70575, Dec. 21, 1998, as amended at 64 FR 60358, Nov. 5, 1999]

### § 54.708 De minimis exemption.

If a contributor's contribution to universal service in any given year is less than $10,000 that contributor will not be required to submit a contribution or Telecommunications Reporting Worksheet for that year unless it is required to do so to by our rules governing Telecommunications Relay Service (47 CFR 64.601 *et seq.* of this chapter), numbering administration (47 CFR 52.1 *et seq.* of this chapter), or shared costs of local number portability (47 CFR 52.21 *et seq.* of this chapter). If a contributor improperly claims exemption from the contribution requirement, it will subject to the criminal provisions of sections 220(d) and (e) of the Act regarding willful false submissions and will be required to pay the amounts withheld plus interest.

[64 FR 41331, July 30, 1999]

### § 54.709 Computations of required contributions to universal service support mechanisms.

(a) Contributions to the universal service support mechanisms shall be

based on contributors' end-user telecommunications revenues and a contribution factor determined quarterly by the Commission.

(1) For funding the federal universal service support mechanisms, the subject revenues will be contributors' interstate and international revenues derived from domestic end users for telecommunications or telecommunications services.

(2) The quarterly universal service contribution factor shall be determined by the Commission based on the ratio of total projected quarterly expenses of the universal service support mechanisms to total end-user interstate and international telecommunications revenues. The Commission shall approve the Administrator's quarterly projected costs of the universal service support mechanisms, taking into account demand for support and administrative expenses. The total subject revenues shall be compiled by the Administrator based on information contained in the Telecommunications Reporting Worksheets described in § 54.711(a).

(3) Total projected expenses for the federal universal service support mechanisms for each quarter must be approved by the Commission before they are used to calculate the quarterly contribution factor and individual contributions. For each quarter, the Administrator must submit its projections of demand for the federal universal service support mechanisms for high-cost areas, low-income consumers, schools and libraries, and rural health care providers, respectively, and the basis for those projections, to the Commission and the Common Carrier Bureau at least sixty (60) calendar days prior to the start of that quarter. For each quarter, the Administrator must submit its projections of administrative expenses for the high-cost mechanism, the low-income mechanism, the schools and libraries mechanism and the rural health care mechanism and the basis for those projections to the Commission and the Common Carrier Bureau at least sixty (60) calendar days prior to the start of that quarter. Based on data submitted to the Administrator on the Telecommunications Reporting Worksheets, the Administrator must submit the total contribution base to the Common Carrier Bureau at least sixty (60) days before the start of each quarter. The projections of demand and administrative expenses and the contribution factor shall be announced by the Commission in a public notice and shall be made available on the Commission's website. The Commission reserves the right to set projections of demand and administrative expenses at amounts that the Commission determines will serve the public interest at any time within the fourteen-day period following release of the Commission's public notice. If the Commission takes no action within fourteen (14) days of the date of release of the public notice announcing the projections of demand and administrative expenses, the projections of demand and administrative expenses, and the contribution factor shall be deemed approved by the Commission. Except as provided in § 54.706(c), the Administrator shall apply the quarterly contribution factor, once approved by the Commission, to contributors' interstate and international end-user telecommunications revenues to calculate the amount of individual contributions.

(b) If the contributions received by the Administrator in a quarter exceed the amount of universal service support program contributions and administrative costs for that quarter, the excess payments will be carried forward to the following quarter. The contribution factors for the following quarter will take into consideration the projected costs of the support mechanisms for that quarter and the excess contributions carried over from the previous quarter.

(c) If the contributions received by the Administrator in a quarter are inadequate to meet the amount of universal service support program payments and administrative costs for that quarter, the Administrator shall request authority from the Commission to borrow funds commercially, with such debt secured by future contributions. Subsequent contribution factors will take into consideration the projected costs of the support mechanisms and the additional costs associated with borrowing funds.

(d) If a contributor fails to file a Telecommunications Reporting Worksheet by the date on which it is due, the Administrator shall bill that contributor based on whatever relevant data the Administrator has available, including, but not limited to, the number of lines presubscribed to the contributor and data from previous years, taking into consideration any estimated changes in such data.

[62 FR 41305, Aug. 1, 1997, as amended at 62 FR 65038, Dec. 10, 1997; 63 FR 2132, Jan. 13, 1998; 63 FR 43098, Aug. 12, 1998; 63 FR 70576, Dec. 21, 1998; 64 FR 41331, July 30, 1999; 64 FR 60358, Nov. 5, 1999]

### § 54.711 Contributor reporting requirements.

(a) Contributions shall be calculated and filed in accordance with the Telecommunications Reporting Worksheet which shall be published in the FEDERAL REGISTER. The Telecommunications Reporting Worksheet sets forth information that the contributor must submit to the Administrator on a semiannual basis. The Commission shall announce by Public Notice published in the FEDERAL REGISTER and on its website the manner of payment and dates by which payments must be made. An officer of the contributor must certify to the truth and accuracy of the Telecommunications Reporting Worksheet, and the Commission or the Administrator may verify any information contained in the Telecommunications Reporting Worksheet at the discretion of the Commission. Inaccurate or untruthful information contained in the Telecommunications Reporting Worksheet may lead to prosecution under the criminal provisions of Title 18 of the United States Code. The Administrator shall advise the Commission of any enforcement issues that arise and provide any suggested response.

(b) The Commission shall have access to all data reported to the Administrator. Contributors may make requests for Commission nondisclosure of company-specific revenue information under § 0.459 of this chapter by so indicating on the Telecommunications Reporting Worksheet at the time that the subject data are submitted. The Commission shall make all decisions regarding nondisclosure of company-specific information. The Administrator shall keep confidential all data obtained from contributors, shall not use such data except for purposes of administering the universal service support programs, and shall not disclose such data in company-specific form unless directed to do so by the Commission. Subject to any restrictions imposed by the Chief of the Common Carrier Bureau, the Universal Service Administrator may share data obtained from contributors with the administrators of the North American Numbering Plan administration cost recovery (See 47 CFR 52.16 of this chapter), the local number portability cost recovery (See 47 CFR 52.32 of this chapter), and the TRS Fund (See 47 CFR 64.604(c)(4)(iii)(H) of this chapter). The Administrator shall keep confidential all data obtained from other administrators and shall not use such data except for purposes of administering the universal service support mechanisms.

(c) The Bureau may waive, reduce, modify, or eliminate contributor reporting requirements that prove unnecessary and require additional reporting requirements that the Bureau deems necessary to the sound and efficient administration of the universal service support mechanisms.

[64 FR 41332, July 30, 1999]

### § 54.713 Contributors' failure to report or to contribute.

A contributor that fails to file a Telecommunications Reporting Worksheet and subsequently is billed by the Administrator shall pay the amount for which it is billed. The Administrator may bill a contributor a separate assessment for reasonable costs incurred because of that contributor's filing of an untruthful or inaccurate Telecommunications Reporting Worksheet, failure to file the Telecommunications Reporting Worksheet, or late payment of contributions. Failure to file the Telecommunications Reporting Worksheet or to submit required quarterly contributions may subject the contributor to the enforcement provisions of the Act and any other applicable law. The Administrator shall advise the Commission of any enforcement

issues that arise and provide any suggested response. Once a contributor complies with the Telecommunications Reporting Worksheet filing requirements, the Administrator may refund any overpayments made by the contributor, less any fees, interest, or costs.

[64 FR 41332, July 30, 1999]

### § 54.715 Administrative expenses of the Administrator.

(a) The annual administrative expenses of the Administrator should be commensurate with the administrative expenses of programs of similar size, with the exception of the salary levels for officers and employees of the Administrator described in paragraph (b) of this section. The annual administrative expenses may include, but are not limited to, salaries of officers and operations personnel, the costs of borrowing funds, equipment costs, operating expenses, directors' expenses, and costs associated with auditing contributors of support recipients.

(b) All officers and employees of the Administrator may be compensated at an annual rate of pay, including any non-regular payments, bonuses, or other compensation, in an amount not to exceed the rate of basic pay in effect for Level I of the Executive Schedule under 5 U.S.C. 5312.

(c) The Administrator shall submit to the Commission projected quarterly budgets at least sixty (60) days prior to the start of every quarter. The Commission must approve the projected quarterly budgets before the Administrator disburses funds under the federal universal service support mechanisms. The administrative expenses incurred by the Administrator in connection with the schools and libraries support mechanism, the rural health care support mechanism, the high cost support mechanism, the low income support mechanism, and the interstate access universal service support mechanism shall be deducted from the annual funding of each respective support mechanism. The expenses deducted from the annual funding for each support mechanism also shall include the Administrator's joint and common costs allocated to each support mechanism pursuant to the cost allocation manual filed by the Administrator under § 64.903 of this chapter.

[63 FR 70576, Dec. 21, 1998, as amended at 65 FR 38690, June 21, 2000; 65 FR 57739, Sept. 26, 2000]]

### § 54.717 Audits of the Administrator.

The Administrator shall obtain and pay for an annual audit conducted by an independent auditor to examine its operations and books of account to determine, among other things, whether the Administrator is properly administering the universal service support mechanisms to prevent fraud, waste, and abuse:

(a) Before selecting an independent auditor, the Administrator shall submit preliminary audit requirements, including the proposed scope of the audit and the extent of compliance and substantive testing, to the Common Carrier Bureau Audit Staff.

(b) The Common Carrier Bureau Audit Staff shall review the preliminary audit requirements to determine whether they are adequate to meet the audit objectives. The Common Carrier Bureau Audit Staff shall prescribe modifications that shall be incorporated into the final audit requirements.

(c) After the audit requirements have been approved by the Common Carrier Bureau Audit Staff, the Administrator shall engage within thirty (30) calendar days an independent auditor to conduct the annual audit required by this paragraph. In making its selection, the Administrator shall not engage any independent auditor who has been involved in designing any of the accounting or reporting systems under review in the audit.

(d) The independent auditor selected by the Administrator to conduct the annual audit shall be instructed by the Administrator to develop a detailed audit program based on the final audit requirements and shall be instructed by the Administrator to submit the audit program to the Common Carrier Bureau Audit Staff. The Common Carrier Bureau Audit Staff shall review the audit program and make modifications, as needed, that shall be incorporated into the final audit program. During the course of the audit, the Common Carrier Bureau Audit Staff

may direct the Administrator to direct the independent auditor to take any actions necessary to ensure compliance with the audit requirements.

(e) During the course of the audit, the Administrator shall instruct the independent auditor to:

(1) Inform the Common Carrier Bureau Audit Staff of any revisions to the final audit program or to the scope of the audit;

(2) Notify the Common Carrier Bureau Audit Staff of any meetings with the Administrator in which audit findings are discussed; and

(3) Submit to the Chief of the Common Carrier Bureau any accounting or rule interpretations necessary to complete the audit.

(f) Within sixty (60) calendar days after the end of the audit period, but prior to discussing the audit findings with the Administrator, the independent auditor shall be instructed by the Administrator to submit a draft of the audit report to the Common Carrier Bureau Audit Staff.

(g) The Common Carrier Bureau Audit Staff shall review the audit findings and audit workpapers and offer its recommendations concerning the conduct of the audit or the audit findings to the independent auditor. Exceptions of the Common Carrier Bureau Audit Staff to the findings and conclusions of the independent auditor that remain unresolved shall be included in the final audit report.

(h) Within fifteen (15) calendar days after receiving the Common Carrier Bureau Audit Staff's recommendations and making any revisions to the audit report, the Administrator shall instruct the independent auditor to submit the audit report to the Administrator for its response to the audit findings. At this time the auditor also must send copies of its audit findings to the Common Carrier Bureau Audit Staff. The Administrator shall provide the independent auditor time to perform additional audit work recommended by the Common Carrier Bureau Audit Staff.

(i) Within thirty (30) calendar days after receiving the audit report, the Administrator shall respond to the audit findings and send copies of its response to the Common Carrier Bureau Audit Staff. The Administrator shall instruct the independent auditor that any reply that the independent auditor wishes to make to the Administrator's responses shall be sent to the Common Carrier Bureau Audit Staff as well as the Administrator. The Administrator's response and the independent auditor's replies shall be included in the final audit report;

(j) Within ten (10) calendar days after receiving the response of the Administrator, the independent auditor shall file with the Commission the final audit report.

(k) Based on the final audit report, the Chief of the Common Carrier Bureau may take any action necessary to ensure that the universal service support mechanisms operate in a manner consistent with the requirements of this Part, as well as such other action as is deemed necessary and in the public interest.

[63 FR 70576, Dec. 21, 1998]

## Subpart I—Review of Decisions Issued by the Administrator

### §54.719 Parties permitted to seek review of Administrator decisions.

(a) Any person aggrieved by an action taken by a division of the Administrator, as defined in §54.701(g), may seek review from the appropriate Committee of the Board, as defined in §54.705.

(b) Any person aggrieved by an action taken by the Administrator pertaining to a billing, collection or disbursement matter that falls outside the jurisdiction of the Committees of the Board may seek review from the Board of Directors of the Administrator, as defined in §54.703.

(c) Any person aggrieved by an action taken by a division of the Administrator, as defined in §54.701(g), a Committee of the Board of the Administrator, as defined in §54.705, or the Board of Directors of the Administrator, as defined in §54.703, may seek review from the Federal Communications Commission, as set forth in §54.722.

[63 FR 70577, Dec. 21, 1998]

### § 54.720 Filing deadlines.

(a) An affected party requesting review of an Administrator decision by the Commission pursuant to § 54.719(c), shall file such request within thirty (30) days of the issuance of the decision by a division or Committee of the Board of the Administrator.

(b) An affected party requesting review of a division decision by a Committee of the Board pursuant to § 54.719(a), shall file such request within thirty (30) days of issuance of the decision by the division.

(c) An affected party requesting review by the Board of Directors pursuant to § 54.719(b) regarding a billing, collection, or disbursement matter that falls outside the jurisdiction of the Committees of the Board shall file such request within thirty (30) days of issuance of the Administrator's decision.

(d) The filing of a request for review with a Committee of the Board under § 54.719(a) or with the full Board under § 54.703, shall toll the time period for seeking review from the Federal Communications Commission. Where the time for filing an appeal has been tolled, the party that filed the request for review from a Committee of the Board or the full Board shall have thirty (30) days from the date the Committee or the Board issues a decision to file an appeal with the Commission.

(e) Parties shall adhere to the time periods for filing oppositions and replies set forth in 47 CFR 1.45.

[63 FR 70577, Dec. 21, 1998]

### § 54.721 General filing requirements.

(a) Except as otherwise provided herein, a request for review of an Administrator decision by the Federal Communications Commission shall be filed with the Federal Communications Commission's Office of the Secretary in accordance with the general requirements set forth in part 1 of this chapter. The request for review shall be captioned ''In the matter of: Request for Review by (name of party seeking review) of Decision of Universal Service Administrator'' and shall reference FCC Docket Nos. 97–21 and 96–45.

(b) A request for review pursuant to § 54.719(a) through (c) shall contain: (1) a statement setting forth the party's interest in the matter presented for review; (2) a full statement of relevant, material facts with supporting affidavits and documentation; (3) the question presented for review, with reference, where appropriate, to the relevant Federal Communications Commission rule, Commission order, or statutory provision; (4) a statement of the relief sought and the relevant statutory or regulatory provision pursuant to which such relief is sought.

(c) A copy of a request for review that is submitted to the Federal Communications Commission shall be served on the Administrator consistent with the requirement for service of documents set forth in § 1.47 of this chapter.

(d) If a request for review filed pursuant to § 54.720(a) through (c) alleges prohibitive conduct on the part of a third party, such request for review shall be served on the third party consistent with the requirement for service of documents set forth in § 1.47 of this chapter. The third party may file a response to the request for review. Any response filed by the third party shall adhere to the time period for filing replies set forth in § 1.45 of this chapter and the requirement for service of documents set forth in § 1.47 of this chapter.

[63 FR 70578, Dec. 21, 1998]

EFFECTIVE DATE NOTE: At 63 FR 70578, Dec. 21, 1998, § 54.721 was added. The section contains modified information collection requirements and will not become effective until approved by the Office of Management and Budget.

### § 54.722 Review by the Common Carrier Bureau or the Commission.

(a) Requests for review of Administrator decisions that are submitted to the Federal Communications Commission shall be considered and acted upon by the Common Carrier; provided, however, that requests for review that raise novel questions of fact, law or policy shall be considered by the full Commission.

(b) An affected party may seek review of a decision issued under delegated authority by the Common Carrier Bureau pursuant to the rules set forth in part 1 of this chapter.

[63 FR 70578, Dec. 21, 1998]

### § 54.723 Standard of review.

(a) The Common Carrier Bureau shall conduct *de novo* review of requests for review of decisions issued by the Administrator.

(b) The Federal Communications Commission shall conduct *de novo* review of requests for review of decisions by the Administrator that involve novel questions of fact, law, or policy; provided, however, that the Commission shall not conduct *de novo* review of decisions issued by the Common Carrier Bureau under delegated authority.

[63 FR 70578, Dec. 21, 1998]

### § 54.724 Time periods for Commission approval of Administrator decisions.

(a) The Common Carrier Bureau shall, within ninety (90) days, take action in response to a request for review of an Administrator decision that is properly before it. The Common Carrier Bureau may extend the time period for taking action on a request for review of an Administrator decision for a period of up to ninety days. The Commission may also, at any time, extend the time period for taking action on a request for review of an Administrator decision pending before the Common Carrier Bureau.

(b) The Commission shall issue a written decision in response to a request for review of an Administrator decision that involves novel questions of fact, law or policy within ninety (90) days. The Commission may extend the time period for taking action on the request for review of an Administrator decision. The Common Carrier Bureau also may extend the time period for taking action on a request for review of an Administrator decision for a period of up to ninety days.

[65 FR 12135, Mar. 8, 2000, as amended at 65 FR 34408, May 30, 2000]

### § 54.725 Universal service disbursements during pendency of a request for review and Administrator decision.

(a) When a party has sought review of an Administrator decision under § 54.719(a) through (c) in connection with the schools and libraries support mechanism or the rural health care support mechanism, the Administrator shall not reimburse a service provider for the provision of discounted services until a final decision has been issued either by the Administrator or by the Federal Communications Commission; provided, however, that the Administrator may disburse funds for any amount of support that is not the subject of an appeal.

(b) When a party has sought review of an Administrator decision under § 54.719(a) through (c) in connection with the high cost and low income support mechanisms, the Administrator shall not disburse support to a service provider until a final decision has been issued either by the Administrator or by the Federal Communications Commission; provided, however, that the Administrator may disburse funds for any amount of support that is not the subject of an appeal.

## Subpart J—Interstate Access Universal Service Support Mechanism

### § 54.800 Terms and definitions.

(a) *Average Price Cap CMT Revenue Per Line Month in a Study Area* has the same meaning as that term is defined in § 61.3(d) of this chapter, except that it includes exogenous changes in effect prior to the effective date of a calculation made pursuant to § 54.808 and exogenous changes not yet effective related to the sale or acquisition of exchanges, but excludes any other exogenous changes or other changes made pursuant to § 61.45(i)(4) of this chapter that are not yet effective.

(b) *Base Period Lines.* For purposes of calculations pursuant to this subpart, Base Period Lines are the number of lines for a given study area or zone as of the end of the quarter ending 6 months prior to the effective date of a calculation pursuant to § 54.808.

(c) *Interstate Access Universal Service Support Benchmark* shall mean, for residential and single-line business lines, $7.00, and for multi-line business lines, $9.20.

(d) *Minimum Adjustment Amount (MAA)* is defined in § 54.806(f).

(e) *MAA Phase In Percentage* is:

50% as of July 1, 2000,

75% as of July 1, 2001,

100% as of July 1, 2002.

(f) *Minimum Delta (MD)* is defined in § 54.806(d).

(g) *Minimum Support Requirement (MSR)* is defined in § 54.806(g).

(h) *Nationwide Total Above Benchmark Revenues* is defined in § 54.806(b).

(i) *Price Cap Local Exchange Carrier* is defined in § 61.3(aa) of this chapter.

(j) *Preliminary Minimum Access Universal Service Support for a Study Area* is the amount calculated pursuant to § 54.804.

(k) *Preliminary Study Area Universal Service Support (PSAUSS)* is defined in § 54.806(c).

(l) *Study Area Above Benchmark Revenues* is the sum of all Zone Above Benchmark Revenues for all zones in the study area.

(m) *Study Area Access Universal Service Support (SAAUS)* is defined in § 54.806 (i) and (j).

(n) *Total National Minimum Delta (TNMD)* is the nationwide sum of all study area Minimum Deltas.

(o) *Total National Minimum Support Requirement (TNMSR)* is the sum of the MSR for all price cap local exchange carrier area study areas.

(p) *Zone Above Benchmark Revenues* is defined in § 54.805(a)(2).

(q) *Zone Average Revenue per Line.* The amount calculated as follows:

Zone Average Revenue Per Line = (25% * (Loop + Port)) + U (Uniform revenue per line adjustment)

Where:

Loop = the price for unbundled loops in a UNE zone.

Port = the price for switch ports in that UNE zone.

U = [(Average Price Cap CMT Revenue per Line month in a study area * price cap local exchange carrier Base Period Lines) − (25% * Σ (price cap local exchange carrier Base Period Lines in a UNE Zone* ((Loop + Port ) for all zones)))] + price cap local exchange carrier Base Period Lines in a study area.

[65 FR 38690, June 21, 2000; 65 FR 57739, Sept. 26, 2000]

## § 54.801 General.

(a) The total amount of universal service support under this subpart, excluding administrative expenses, for areas served by price cap local exchange carriers as of June 30, 2000, is targeted to be $650 million per year, if no exchanges, other than those offered for sale prior to January 1, 2000, are sold to non-price-cap local exchange carriers or purchased from non-price cap local exchange carriers by price cap local exchange carriers.

(b) In the event that all or a portion of a study area served by a price cap local exchange carrier is sold to an entity other than a price cap local exchange carrier, and the study area or portion thereof was not offered for sale prior to January 1, 2000, then the support that would otherwise be provided under this subpart, had such study area or portion thereof not been sold, will not be distributed or collected. Subsequent calculations will use the last reported data for the study area or portion thereof that was sold to determine the amount that will not be distributed or collected.

(c) In the event that a price cap local exchange carrier acquires additional exchanges, from an entity other than a price cap local exchange carrier, that acquisition should be reported to the Administrator pursuant to § 54.802 and included in the determination of study area support pursuant to § 54.806 for the areas served by the acquiring price cap LEC, beginning with the next support recalculation pursuant to § 54.808.

(d) In the event that a price cap local exchange carrier acquires additional exchanges from an entity that is also a price cap local exchange carrier, the acquiring price cap local exchange carrier will receive support under this subpart at the same level as the selling price cap local exchange carrier formerly received, and both carriers will adjust their line counts accordingly beginning with the next quarterly report to the Administrator. At the subsequent report to the Administrator for

purposes of recalculating support as required by § 54.808, the acquiring and selling price cap local exchange carriers will reflect the acquired and sold lines, and will adjust the Average CMT Revenue per Line month for the affected study areas accordingly.

(e) The Administrator for the fund created by this subpart shall be the Universal Service Administrative Company.

[65 FR 38690, June 21, 2000; 65 FR 57739, Sept. 26, 2000]

### § 54.802 Obligations of local exchange carriers and the Administrator.

(a) Each Eligible Telecommunications Carrier that is providing service within an area served by a price cap local exchange carrier shall submit to the Administrator, on a quarterly basis on the last business day of March, June, September, and December of each year line count data showing the number of lines it serves for the period ending three months prior to the reporting date, within each price cap local exchange carrier study area disaggregated by UNE Zone if UNE Zones have been established within that study area, showing residential/single-line business and multi-line business line counts separately. For purposes of this report, and for purposes of computing support under this subpart, the aggregated residential/single-line business class lines reported include single and non-primary residential lines, single-line business lines, ISDN BRI and other related residential class lines. Similarly, the multi-line business class lines reported include multi-line business, centrex, ISDN PRI and other related business class lines assessed the End User Common Line charge pursuant to § 69.152 of this chapter. For purposes of this report and for purposes of computing support under this subpart, lines served using resale of the price cap local exchange carrier's service pursuant to section 251(c)(4) of the Communications Act of 1934, as amended, shall be considered lines served by the price cap local exchange carrier only and must be reported accordingly.

(b) In addition to the information submitted pursuant to paragraph (a) of this section, each price cap local exchange carrier must submit to the Administrator, on June 30, 2000, October 15, 2000, and April 16, 2001 and annually thereafter or as determined by the Administrator according to § 54.808:

(1)(i) Average Price Cap CMT Revenue per Line month in a study area for each of its study areas;

(ii) The rates established for UNE Loops and UNE Line Ports, by zone in those study areas where UNE Zones have been established as of the date of filing; and

(iii) Make available information sufficient to determine the boundaries of each UNE Zone within each of its study areas where such zones have been established;

(2) Provided, however, that after the June 30, 2000 filing, if there have been no changes since its previous filing a company may submit a statement that there have been no changes in lieu of such information, and further provided that, for study areas in which UNE Zones have been newly established since the last filing pursuant to this paragraph, the price cap local exchange carrier shall also report the information required by paragraphs (b)(1)(ii) and (b)(1)(iii) of this section to the Administrator on July 15, 2000, or January 15, 2001, as required.

(c) An eligible telecommunications carrier shall be eligible for support pursuant to this subpart only after it has filed all of the information required by paragraphs (a) through (c) of this section, where applicable. An eligible telecommunications carrier shall receive payment of support pursuant to this subpart only for such months the carrier is actually providing service to the end user. The Administrator shall ensure that there is periodic reconciliation of support payments.

(d) Upon receiving the information required to be filed in paragraphs (a) and (b) of this section, the Administrator shall:

(1) Perform the calculations described in §§ 54.804 through 54.807 of this subpart;

(2) Publish the results of these calculations showing Interstate Access Universal Service Support Per Line available in each price cap local exchange carrier study area, by UNE Zone and customer class;

(3) Collect the funds necessary to provide support pursuant to this subpart in accordance with subpart H;

(4) Distribute support calculated pursuant to the rules contained in this subpart; and

(5) Report quarterly to the Commission on the collection and distribution of funds under this subpart as described in § 54.701(g). Fund distribution reporting will be by state and by eligible telecommunications carrier within the state.

[65 FR 38690, June 21, 2000; 65 FR 57739, 57740, Sept. 26, 2000]

### § 54.803 Universal service zones.

(a) The zones used for determining interstate access universal service support shall be the same zones that would be used for End User Common Line (EUCL) charge deaveraging as described in § 69.152(q)(2) of this chapter.

(b) In a price cap study area where the price cap local exchange carrier has not established state-approved prices for UNE loops by zone, the Administrator shall develop an estimate of the local exchange carrier's Zone Above Benchmark Revenues for transitional purposes, in order to reserve a portion of the fund for that study area. This estimate will be included by the Administrator in the Nationwide Study Area Above Benchmark Revenues calculated pursuant to § 54.806.

(1) For the purpose of developing this transitional estimate, the loop and port costs estimated by the FCC cost model, or other substitute method if no model is available, shall be used.

(2) For the purpose of developing this transitional estimate, the administrator shall construct three zones. Wire centers within the study area will be grouped into these zones in such a way that each zone is assigned approximately one third of local exchange carrier base period lines in the study area, with the lowest cost wire centers assigned to Zone 1, the highest cost wire centers assigned to Zone 3, and the remainder to Zone 2.

[65 FR 38690, June 21, 2000; 65 FR 57740, Sept. 26, 2000]

### § 54.804 Preliminary minimum access universal service support for a study area calculated by the Administrator.

(a) If Average Price Cap CMT Revenue per Line month is greater than $9.20 then: Preliminary Minimum Access Universal Service Support (for a study area) = Average Price Cap CMT Revenue per Line month in a study area * price cap local exchange carrier Base Period Lines * 12) − (($7.00 * price cap local exchange carrier Base Period Residential and Single-Line Business Lines * 12) + ($9.20 * price cap local exchange carrier Base Period Multi-line Business Lines * 12)).

(b) If Average Price Cap CMT Revenue per Line month in a study area is greater than $7.00 but less than $9.20 then: Preliminary Minimum Access Universal Service Support (for a study area) = (Average Price Cap CMT Revenue per Line month in a study area—$7.00) * (price cap local exchange carrier Base Period Residential and Single-Line Business Lines * 12).

(c) If Average Price Cap CMT Revenue per Line month in a study area is less than $7.00 then the Preliminary Minimum Access Universal Service Support (for a study area) is zero.

[65 FR 57740, Sept. 26, 2000]

### § 54.805 Zone and study area above benchmark revenues calculated by the Administrator.

(a) The following steps shall be performed by the Administrator to determine Zone Above Benchmark Revenues for each price cap local exchange carrier.

(1) Calculate Zone Average Revenue Per Line.

(2) Calculate Zone Above Benchmark Revenues. Zone Above Benchmark Revenues is the sum of Zone Above Benchmark Revenues for Residential and Single-Line Business Lines and Zone Above Benchmark Revenues for Multi-Line Business Lines. Zone Above Benchmark Revenues for Residential and Single-Line Business Lines is, within each zone, (Zone Average Revenue Per Line minus $7.00) multiplied by all eligible telecommunications carrier Base Period Residential and Single-Line Business Lines times 12. If negative, the Zone Above Benchmark

Revenues for Residential and Single-Line Business Lines for the zone is zero. Zone Above Benchmark Revenues for Multi-line Business Lines is, within each zone, (Zone Average Revenue Per Line minus $9.20) multiplied by all eligible telecommunications carrier zone Base Period Multi-line Business Lines times 12. If negative, the Zone Above Benchmark Revenues for Multi-line Business Lines for the zone is zero.

(b) Study Area Above Benchmark Revenues is the sum of Zone Above Benchmark Revenues for all zones in the study area.

[65 FR 38690, June 21, 2000; 65 FR 57740, Sept. 26, 2000]

**§ 54.806 Calculation by the Administrator of interstate access universal service support for areas served by price cap local exchange carriers.**

(a) The Administrator, based on the calculations performed in §§ 54.804 and 54.805, shall calculate the Interstate Access Universal Service Support for areas served by price cap local exchange carriers according to the following methodology:

(b) Calculate Nationwide Total Above Benchmark Revenues. Nationwide Total Above Benchmark Revenues is the sum of all Study Area Above Benchmark Revenues for all study areas served by local exchange carriers.

(c) Calculate Preliminary Study Area Universal Service Support (PSAUSS).

(1) If the Nationwide Total Above Benchmark Revenues is greater than $650 million, then the Preliminary Study Area Universal Service Support (PSAUSS) equals the Study Area Above Benchmark Revenues multiplied by the ratio of $650 million to Nationwide Total Above Benchmark Revenues (*i.e.*, Preliminary Study Area Universal Service Support = Study Area Above Benchmark Revenues *($650 Million/Nationwide Total Above Benchmark Revenues)).

(2) If the Nationwide Total Above Benchmark Revenues is not greater than $650 million, PSAUSS equals the Study Area Above Benchmark Revenues.

(d) Calculate the Minimum Delta (MD) by study area. Within each study area the Minimum Delta will be equal to the Preliminary Minimum Access Universal Service Support less the PSAUSS, if the difference is greater than zero. If the difference is less than or equal to zero, the MD is equal to zero.

(e) Calculate the Total National Minimum Delta (TNMD) by summing all study area Minimum Deltas nationwide.

(f) Calculate the Minimum Adjustment Amount. (1) If the TNMD is greater than $75 million, then the Minimum Adjustment Amount (MAA) equals the MAA Phase In Percentage times the MD by study area times the ratio of $75 million to TNMD.

(2) If the TNMD is less than $75 million, then the MAA equals the product of the MAA Phase In Percentage and the MD by study area.

(g) Calculate the Minimum Support Requirement (MSR). The Minimum Support Requirement for a study area equals the PSAUSS plus the MAA.

(h) Calculate the Total National Minimum Support Requirement (TNMSR), which equals the sum of the MSR for all study areas in which the Preliminary Minimum Access Universal Service Support is greater than or equal to the PSAUSS.

(i) Calculate Study Area Access Universal Service Support (SAAUS) for a study area in which the price cap local exchange carrier has geographically deaveraged state-approved rates for UNE loops:

(1) For study areas in which the Preliminary Minimum Access Universal Service Support is greater than PSAUSS, and within which the price cap local exchange carrier has established geographically deaveraged state-approved rates for UNE loops, the SAAUS for that study area is the MSR.

(2) For study areas in which the Preliminary Minimum Access Universal Service Support is less than PSAUSS, and within which the price cap local exchange carrier has established geographically deaveraged state-approved rates for UNE loops, the SAAUS for that study area is equal to:

PSAUSS * ($650 million − TNMSR) ÷ (the sum of PSAUSS of study areas where the Preliminary Minimum Access Universal Service Support is less than PSAUSS).

(j) Calculate Study Area Access Universal Service Support (SAAUS) for a price cap local exchange carrier that has not established geographically deaveraged state-approved rates for UNE loops. In such study areas, the SAAUS shall be the lesser of the Preliminary Minimum Access Universal Service Support or:

(1) For study areas in which the Preliminary Minimum Access Universal Service Support is greater than PSAUSS, and for which an estimate has been made for deaveraged UNE loop costs, the SAAUS for that study area is the MSR.

(2) For study areas in which the Preliminary Minimum Access Universal Service Support is less than PSAUSS, and for which an estimate has been made for deaveraged UNE loop costs, the SAAUS for that study area is equal to:

PSAUSS * ($650 million − TNMSR) ÷ (the sum of PSAUSS of study areas where the Preliminary Minimum Access Universal Service Support is less than PSAUSS).

[65 FR 38690, June 21, 2000; 65 FR 57740, Sept. 26, 2000]

### § 54.807 Interstate access universal service support.

(a) Each Eligible Telecommunications Carrier (ETC) that provides supported service within the study area of a price cap local exchange carrier shall receive Interstate Access Universal Service Support for each line that it serves within that study area.

(b) In any study area within which the price cap local exchange carrier has not established state approved geographically deaveraged rates for UNE loops, the Administrator shall calculate the Interstate Access Universal Service Support Per Line by dividing Study Area Access Universal Service Support by twelve times all eligible telecommunications carriers' base period lines in that study area adjusted for growth during the relevant support period based on the average nationwide annual growth in eligible lines during the three previous years. For the purpose of calculating growth, the Administrator shall use a simple average of annual growth rates for total switched access lines for the three most recent years as reported in the Common Carrier Bureau Report, Statistics of Communications Common Carriers, Table 6.10—Selected Operating Statistics. Interested parties may obtain this report from the U.S. Government Printing Office or by downloading it from the Federal Communication Commission's website http:// www.fcc.gov/ccb/stats.

(c) In any study area within which the price cap local exchange carrier has established state approved geographically deaveraged rates for UNE loops, the Administrator shall calculate the Interstate Access Universal Service Support Per Line for each customer class and zone using all eligible telecommunications carriers' base period lines by customer class and zone adjusted for growth during the relevant support period based on the average nationwide annual growth in eligible lines during the three previous years. For the purpose of calculating growth, the Administrator shall use a simple average of annual growth rates for total switched access lines for the three most recent years as reported in the Common Carrier Bureau Report, Statistics of Communications Common Carriers, Table 6.10—Selected Operating Statistics. Support shall be allocated to lines in the highest cost UNE zone first, and will ''cascade'' to lines in lower cost UNE zones to the extent that sufficient funding is available. Beginning with the zone with the highest Zone Average Revenue Per Line, support will be applied in the following order of priority:

(1) To all lines in the highest zone, to eliminate the amount per line by which Zone Average Revenue Per Line exceeds the higher of $9.20 or the Average Revenue Per Line in the next highest zone;

(2) If the Zone Average Revenue Per Line in the next highest zone is greater than $9.20, then to all lines in both zones to eliminate the amount per line by which Zone Average Revenue per Line exceeds $9.20 or the Zone Average Revenue Per Line in the third highest zone. This application of support will continue to additional zones in the same fashion until the amount per line by which Zone Average Revenue Per Line exceeds $9.20 has been eliminated

in all zones, or until the available support has been exhausted;

(3) To all residential and single-line business lines in the highest zone, to eliminate the remaining amount per line that Zone Average Revenue Per Line for these lines exceeds the higher of $7.00 or Zone Average Revenue Per Line in the next highest zone;

(4) If the Zone Average Revenue per Line in the next highest zone is greater than $7.00, then to all residential and single-line business lines in both zones to eliminate the remaining amount per line by which Zone Average Revenue Per Line exceeds $7.00. This application of support will continue to additional zones in the same fashion until the difference between Zone Average Revenue Per Line and $7.00 has been eliminated in all zones, or until the available support has been exhausted.

(d) Notwithstanding the provisions of §54.307(a)(2), the per-line support amount determined within each zone by applicable customer class under paragraph (b) or (c) of this section is portable among all eligible telecommunications carriers providing service within that zone.

[65 FR 38690, June 21, 2000; 65 FR 57740, Sept. 26, 2000]

### §54.808 Transition provisions and periodic calculation.

Study Area Access Universal Service Support amounts for the area served by each price cap local exchange carrier will be calculated as of July 1, 2000, January 1, 2001, July 1, 2001 and thereafter as determined by the Administrator, but at least annually.

[65 FR 38690, June 21, 2000; 65 FR 57740, Sept. 26, 2000]

### §54.809 Carrier certification.

(a) Certification. Carriers that desire to receive support pursuant to §54.807 must file a certification with the Administrator and the Commission stating that all interstate access universal service support provided to such carrier will be used only for the provision, maintenance, and upgrading of facilities and services for which the support is intended. Support provided pursuant to §54.807 shall only be provided to the extent that the carrier has filed the requisite certification pursuant to this section.

(b) Certification format. A certification pursuant to this section may be filed in the form of a letter from an authorized representative for the carrier, and must be filed with both the Office of the Secretary of the Commission clearly referencing CC Docket No. 96–45, and with the Administrator of the interstate access universal service support mechanism, on or before the filing deadlines set forth in paragraph (c) of this section. All of the certifications filed by carriers pursuant to this section shall become part of the public record maintained by the Commission.

(c) Filing deadlines. In order for a price cap local exchange carrier, and/or an eligible telecommunications carrier serving lines in the service area of a price cap local exchange carrier, to receive interstate access universal service support, such carrier must file an annual certification, as described in paragraph (b) of this section, on the date that it first files its line count information pursuant to §54.802, and thereafter on June 30th of each year.

[65 FR 38690, June 21, 2000; 65 FR 57740, Sept. 26, 2000]

[64 FR 33788, June 24, 1999]

## PART 59—INFRASTRUCTURE SHARING

Sec.

59.1 General duty.
59.2 Terms and conditions of infrastructure sharing.
59.3 Information concerning deployment of new services and equipment.
59.4 Definition of ''qualifying carrier''.

AUTHORITY: 47 U.S.C. 154(i), 154(j), 201–205, 259, 303(r), 403.

SOURCE: 62 FR 9713, Mar. 4, 1997, unless otherwise noted.

### §59.1 General duty.

Incumbent local exchange carriers (as defined in 47 U.S.C. section 251(h)) shall make available to any qualifying carrier such public switched network infrastructure, technology, information, and telecommunications facilities and functions as may be requested by such qualifying carrier for the purpose of enabling such qualifying carrier to

provide telecommunications services, or to provide access to information services, in the service area in which such qualifying carrier has obtained designation as an eligible telecommunications carrier under section 214(e) of 47 U.S.C.

### § 59.2 Terms and conditions of infrastructure sharing.

(a) An incumbent local exchange carrier subject to the requirements of section 59.1 shall not be required to take any action that is economically unreasonable or that is contrary to the public interest.

(b) An incumbent local exchange carrier subject to the requirements of section 59.1 may, but shall not be required to, enter into joint ownership or operation of public switched network infrastructure, technology, information and telecommunications facilities and functions and services with a qualifying carrier as a method of fulfilling its obligations under section 59.1.

(c) An incumbent local exchange carrier subject to the requirements of section 59.1 shall not be treated by the Commission or any State as a common carrier for hire or as offering common carrier services with respect to any public switched network infrastructure, technology, information, or telecommunications facilities, or functions made available to a qualifying carrier in accordance with regulations issued pursuant to this section.

(d) An incumbent local exchange carrier subject to the requirements of section 59.1 shall make such public switched network infrastructure, technology, information, and telecommunications facilities, or functions available to a qualifying carrier on just and reasonable terms and pursuant to conditions that permit such qualifying carrier to fully benefit from the economies of scale and scope of such local exchange carrier. An incumbent local exchange carrier that has entered into an infrastructure sharing agreement pursuant to section 59.1 must give notice to the qualifying carrier at least sixty days before terminating such infrastructure sharing agreement.

(e) An incumbent local exchange carrier subject to the requirements of section 59.1 shall not be required to engage in any infrastructure sharing agreement for any services or access which are to be provided or offered to consumers by the qualifying carrier in such local exchange carrier's telephone exchange area.

(f) An incumbent local exchange carrier subject to the requirements of section 59.1 shall file with the State, or, if the State has made no provision to accept such filings, with the Commission, for public inspection, any tariffs, contracts, or other arrangements showing the rates, terms, and conditions under which such carrier is making available public switched network infrastructure, technology, information and telecommunications facilities and functions pursuant to this part.

### § 59.3 Information concerning deployment of new services and equipment.

An incumbent local exchange carrier subject to the requirements of section 59.1 that has entered into an infrastructure sharing agreement under section 59.1 shall provide to each party to such agreement timely information on the planned deployment of telecommunications services and equipment, including any software or upgrades of software integral to the use or operation of such telecommunications equipment.

### § 59.4 Definition of "qualifying carrier".

For purposes of this part, the term ''qualifying carrier'' means a telecommunications carrier that:

(a) Lacks economies of scale or scope; and

(b) Offers telephone exchange service, exchange access, and any other service that is included in universal service, to all consumers without preference throughout the service area for which such carrier has been designated as an eligible telecommunications carrier under section 214(e) of 47 U.S.C.

## PART 61—TARIFFS

### Subpart A—General

Sec.

61.1 Purpose and application.
61.2 General tariff requirements.
61.3 Definitions.
61.11—12 [Reserved]

### Subpart B—Rules for Electronic Filing

61.13 Scope.
61.14 Method of filing publications.
61.15 Letters of transmittal and cover letters.
61.16 Base documents.
61.17 Method of filing applications for special permission.

### Subpart C—General Rules for Nondominant Carriers

61.18 Scope.
61.19 Detariffing of interstate, domestic, interexchange services.
61.20 Method of filing publications.
61.21 Cover letters.
61.22 Composition of tariffs.
61.23 Notice requirements.
61.25 References to other instruments.

### Subpart D—General Tariff Rules for International Dominant Carriers

61.28 International dominant carrier tariff filing requirements.

### Subpart E—General Rules for Dominant Carriers

61.31 Scope.
61.32 Method of filing publications.
61.33 Letters of transmittal.
61.38 Supporting information to be submitted with letters of transmittal.
61.39 Optional supporting information to be submitted with letters of transmittal for Access Tariff filings effective on or after April 1, 1989, by local exchange carriers serving 50,000 or fewer access lines in a given study area that are described as subset 3 carriers in §69.602.
61.40 Private line rate structure guidelines.
61.41 Price cap requirements generally.
61.42 Price cap baskets and service categories.
61.43 Annual price cap filings required.
61.44 [Reserved]
61.45 Adjustments to the PCI for Local Exchange Carriers.
61.46 Adjustments to the API.
61.47 Adjustments to the SBI; pricing bands.
61.48 Transition rules for price cap formula calculations.
61.49 Supporting information to be submitted with letters of transmittal for tariffs of carriers subject to price cap regulation.
61.50–61.51 [Reserved]
61.52 Form, size, type, legibility, etc.
61.54 Composition of tariffs.
61.55 Contract-based tariffs.
61.58 Notice requirements.
61.59 Effective period required before changes.

### Subpart F—Specific Rules for Tariff Publications of Dominant and Nondominant Carriers

61.66 Scope.
61.68 Special notations.
61.69 Rejection.
61.72 Public information requirements.
61.73 Duplication of rates or regulations.
61.74 References to other instruments.
61.83 Consecutive numbering.
61.86 Supplements.
61.87 Cancellation of tariffs.

### Subpart G—Concurrences

61.131 Scope.
61.132 Method of filing concurrences.
61.133 Format of concurrences.
61.134 Concurrences for through services.
61.135 Concurrences for other purposes.
61.136 Revocation of concurrences.

### Subpart H—Applications for Special Permission

61.151 Scope.
61.152 Terms of applications and grants.
61.153 Method of filing applications.

### Subpart I—Adoption of Tariffs and Other Documents of Predecessor Carriers

61.171 Adoption notice.
61.172 Changes to be incorporated in tariffs of successor carrier.

### Subpart J—Suspensions

61.191 Carrier to file supplement when notified of suspension.
61.192 Contents of supplement announcing suspension.
61.193 Vacation of suspension order; supplements announcing same; etc.


AUTHORITY: Secs. 1, 4(i), 4(j), 201–205 and 403 of the Communications Act of 1934, as amended; 47 U.S.C. 151, 154(i), 154(j), 201–205 and 403, unless otherwise noted.

SOURCE: 49 FR 40869, Oct. 18, 1984, unless otherwise noted.

## Subpart A—General

### §61.1 Purpose and application.

(a) The purpose of this part is to prescribe the framework for the initial establishment of and subsequent revisions to tariff publications.

(b) Tariff publications filed with the Commission must conform to the rules in this part. Failure to comply with any provisions of this part may be

grounds for rejection of the non-complying publication.

(c) No carrier required to file tariffs may provide any interstate or foreign communication service until every tariff publication for such communication service is on file with the Commission and in effect.

### § 61.2 General tariff requirements.

(a) In order to remove all doubt as to their proper application, all tariff publications must contain clear and explicit explanatory statements regarding the rates and regulations.

(b) Tariff publications must be delivered to the Commission free from all charges, including claims of postage.

(c) Tariff publications will not be returned.

[64 FR 46586, Aug. 26, 1999]

### § 61.3 Definitions.

(a) *Act.* The Communications Act of 1934 (48 Stat. 1004; 47 U.S.C. chapter 5), as amended.

(b) *Actual Price Index* (API). An index of the level of aggregate rate element rates in a basket, which index is calculated pursunt to § 61.46.

(c) *Association.* This term has the meaning given it in § 69.2(d).

(d) *Average Price Cap CMT Revenue per Line month.* (1) Price Cap CMT Revenue (as defined in § 61.3(cc)) per month as of July 1, 2000 (adjusted to remove Universal Service Contributions assessed to local exchange carriers pursuant to § 54.702 of this chapter) using 2000 annual filing base period demand, divided by the 2000 annual filing base period demand. In filing entities with multiple study areas, if it becomes necessary to calculate the Average Price Cap CMT Revenue per Line month for a specific study area, then the Average Price Cap CMT Revenue per Line month for that study area is determined as follows, using base period demand revenues (adjusted to remove Universal Service Contributions assessed to Local Exchange Carriers pursuant to § 54.702 of this chapter), Base Factor Portion (BFP) and 2000 annual filing base period lines:

Average Price Cap CMT Revenue per Line Month in a study area = Price Cap CMT Revenue × (BFP in the study area ÷ (BFP in the Filing Entity) ÷(Lines in the study area.

(2) Nothing in this definition precludes a price cap local exchange carrier from continuing to average rates across filing entities containing multiple study areas, where permitted under existing rules.

(3) Average Price Cap CMT Revenues per Line month may be adjusted after July 1, 2000 to reflect exogenous costs pursuant to § 61.45(d).

(4) Average Price Cap CMT Revenues per Line month may also be adjusted pursuant to § 61.45 (b)(1)(iii).

(e) *Average Traffic Sensitive Charge.* (1) The Average Traffic Sensitive Charge (ATS charge) is the sum of the following two components:

(i) The Local Switching (LS) component. The LS component will be calculated by dividing the proposed LS revenues (End Office Switch, LS trunk ports, Information Surcharge, and signalling transfer point (STP) port) by the base period LS minutes of use (MOUs); and

(ii) The Transport component. The Transport component will be calculated by dividing the proposed Transport revenues (Switched Direct Trunk Transport, Signalling for Switched Direct Trunk Transport, Entrance Facilities for Switched Access traffic, Tandem Switched Transport, Signalling for Tandem Switching and residual per minute Transport Interconnection Charge (TIC) pursuant to § 69.155 of this chapter) by price cap local exchange carrier only base period MOUs (including meet-point billing arrangements for jointly-provided interstate access by a price cap local exchange carrier and any other local exchange carrier).

(2) For the purposes of determining whether the ATS charge has reached the Target Rate as set forth in § 61.3(qq), the calculations should include all the relevant revenues and minutes for services provided under generally available price cap tariffs.

(f) *Band.* A zone of pricing flexibility for a service category, which zone is calculated pursuant to § 61.47.

(g) *Base period.* For carriers subject to §§ 61.41 through 61.49, the 12-month period ending six months prior to the effective date of annual price cap tariffs. Base year or base period earnings

shall exclude amounts associated with exogenous adjustments to the PCI for the lower formula adjustment mechanism permitted by §61.45(d)(1)(vii).

(h) *Basket.* Any class or category of tariffed service or charge:

(1) Which is established by the Commission pursuant to price cap regulation;

(2) The rates of which are reflected in an Actual Price Index; and

(3) The related revenues of which are reflected in a Price Cap Index.

(i) *Change in rate structure.* A restructuring or other alteration of the rate components for an existing service.

(j) *Charges.* The price for service based on tariffed rates.

(k) *Commercial contractor.* The commercial firm to whom the Commission annually awards a contract to make copies of Commission records for sale to the public.

(l) *Commission.* The Federal Communications Commission.

(m) *Concurring carrier.* A carrier (other than a connecting carrier) subject to the Act which concurs in and assents to schedules of rates and regulations filed on its behalf by an issuing carrier or carriers.

(n) *Connecting carrier.* A carrier engaged in interstate or foreign communication solely through physical connection with the facilities of another carrier not directly or indirectly controlling or controlled by, or under direct or indirect common control with, such carrier.

(o) *Contract-based tariff.* A tariff based on a service contract entered into between a non-dominant carrier and a customer, or between a customer and a price cap local exchange carrier which has obtained permission to offer contract-based tariff services pursuant to part 69, subpart H, of this chapter.

(p) *Corrections.* The remedy of errors in typing, spelling, or punctuation.

(q) *Dominant carrier.* A carrier found by the Commission to have market power (*i.e.*, power to control prices).

(r) *GDP Price Index (GDP–PI).* The estimate of the Chain–Type Price Index for Gross Domestic Product published by the United States Department of Commerce, which the Commission designates by Order.

(s) *GNP Price Index (GNP–PI).* The estimate of the ''Fixed-Weighted Price Index for Gross National Product, 1982 Weights'' published by the United States Department of Commerce, which the Commission designates by Order.

(t) *Issuing carrier.* A carrier subject to the Act that publishes and files a tariff or tariffs with the Commission.

(u) *Line month.* Line demand per month multiplied by twelve.

(v) *Local exchange carrier.* Any person that is engaged in the provision of telephone exchange service or exchange access as defined in section 3(26) of the Act.

(w) *Mid-size company.* All price cap local exchange carriers other than the Regional Bell Operating Companies and GTE.

(x) *New service offering.* A tariff filing that provides for a class or sub-class of service not previously offered by the carrier involved and that enlarges the range of service options available to ratepayers.

(y) *Non-dominant carrier.* A carrier not found to be dominant.

(z) *Other participating carrier.* A carrier subject to the Act that publishes a tariff containing rates and regulations applicable to the portion or through service it furnishes in conjunction with another subject carrier.

(aa) *Price Cap Local Exchange Carrier.* A local exchange carrier subject to regulation pursuant to §61.41 through 61.49.

(bb) *Pooled Local Switching Revenue.* For certain qualified companies as set forth in §61.48 (m), is the amount of additional local switching reductions in the July 2000 Annual filing allowed to be moved and recovered in the CMT basket.

(cc) *Price Cap CMT Revenue.* The maximum total revenue a filing entity would be permitted to receive from End User Common Line charges under §69.152 of this chapter, Presubscribed Interexchange Carrier charges (PICCs) under §69.153 of this chapter, Carrier Common Line charges under §69.154 of this chapter, and Marketing under §69.156 of this chapter, using Base Period lines. Price Cap CMT Revenue

does not include the price cap local exchange carrier universal service contributions as of July 1, 2000. The Price Cap CMT revenue does not include the pooled local switching revenue outlined in paragraph (bb) of this section.

(dd) *Price Cap Index (PCI).* An index of prices applying to each basket of services of each carrier subject to price cap regulation, and calculated pursuant to § 61.45.

(ee) *Price cap regulation.* A method of regulation of dominant carriers provided in §§ 61.41 through 61.49.

(ff) *Price cap tariff filing.* Any tariff filing involving a service subject to price cap regulation, or that requires calculations pursuant to §§ 61.45, 61.46, or 61.47.

(gg) [Reserved]

(hh) *Rate.* The tariffed price per unit of service.

(ii) *Rate increase.* Any change in a tariff which results in an increased rate or charge to any of the filing carrier's customers.

(jj) *Rate level change.* A tariff change that only affects the actual rate associated with a rate element, and does not affect any tariff regulations or any other wording of tariff language.

(kk) *Regulations.* The body of carrier prescribed rules in a tariff governing the offering of service in that tariff, including rules, practices, classifications, and definitions.

(ll) *Restructured service.* An offering which represents the modification of a method of charging or provisioning a service; or the introduction of a new method of charging or provisioning that does not result in a net increase in options available to customers.

(mm) *Rural Company.* A company that, as of December 31, 1999, was certified to the Commission as a rural telephone company.

(nn) *Service Band Index (SBI).* An index of the level of aggregate rate element rates in a service category, which index is calculated pursuant to § 61.47.

(oo) *Service category.* Any group of rate elements subject to price cap regulation, which group is subject to a band.

(pp) *Supplement.* A publication filed as part of a tariff for the purpose of suspending or canceling that tariff, or tariff publication and numbered independently from the tariff page series.

(qq) *Target Rate.* The applicable Target Rate shall be defined as follows:

(1) For regional Bell Operating Companies and GTE, $0.0055 per ATS minute of use;

(2) For a holding company with a holding company average of less than 19 Switched Access End User Common Line charge lines per square mile served such company may elect to use a Target Rate of $0.0095 with respect to all exchanges owned by that holding company on July 1, 2000, or which that holding company is, as of April 1, 2000, under a binding and executed contract to purchase;

(3) For other price cap local exchange carriers, $0.0065 per ATS minute of use.

(rr) *Tariff.* Schedules of rates and regulations filed by common carriers.

(ss) *Tariff publication, or publication.* A tariff, supplement, revised page, additional page, concurrence, notice of revocation, adoption notice, or any other schedule of rates or regulations filed by common carriers.

(tt) *Tariff year.* The period from the day in a calendar year on which a carrier's annual access tariff filing is scheduled to become effective through the preceding day of the subsequent calendar year.

(uu) *Text change.* A change in the text of a tariff which does not result in a change in any rate or regulation.

(vv) *United States.* The several States and Territories, the District of Columbia, and the possessions of the United States.

(ww) *Corridor service.* ''Corridor service'' refers to interLATA services offered in the ''limited corridors'' established by the District Court in United States v. Western Electric Co., Inc., 569 F. Supp. 1057, 1107 (D.D.C. 1983).

(xx) *Toll dialing parity.* ''Toll dialing parity'' exists when there is dialing parity, as defined in § 51.5 of this chapter, for toll services.

(yy) *Loop-based services.* Loop-based services are services that employ Subcategory 1.3 facilities, as defined in § 36.154 of this chapter.

(zz) *Zone Average Revenue per Line.* The amount calculated as follows:

Zone Average Revenue per Line = (25% * (Loop + Port)) + U (Uniform revenue per line adjustment)

Where:

Loop = the price for unbundled loops in a UNE zone.

Port = the price for switch ports in that UNE zone.

U = [(Average Price Cap CMT Revenue per Line month in a study area * price cap local exchange carrier Base Period Lines)−(25% * Σ (price cap local exchange carrier Base Period Lines in a UNE Zone * ((Loop + Port ) for all zones)))] ÷ price cap local exchange carrier Base Period Lines in a study area.

[54 FR 19840, May 8, 1989, as amended at 55 FR 42382, Oct. 19, 1990; 56 FR 55239, Oct. 25, 1991; 58 FR 36147, July 6, 1993; 59 FR 10301, Mar. 4, 1994; 60 FR 19527, Apr. 19, 1995; 60 FR 20052, Apr. 24, 1995; 61 FR 59366, Nov. 22, 1996; 62 FR 5777, Feb. 7, 1997; 62 FR 31930, June 11, 1997; 64 FR 46586, Aug. 26, 1999; 64 FR 51265, Sept. 22, 1999; 65 FR 38694, June 21, 2000; 65 FR 57740, 57741, Sept. 26, 2000]

### §§61.11–61.12 [Reserved]

## Subpart B—Rules for Electronic Filing

SOURCE: 63 FR 35540, June 30, 1998, unless otherwise noted.

### §61.13 Scope.

(a) This applies to all tariff publications of carriers required to file tariff publications electronically, and any tariff publication that a carrier chooses to file electronically.

(b) All incumbent local exchange carriers are required to file tariff publications electronically.

(c) All tariff publications shall be filed in a manner that is compatible and consistent with the technical requirements of the Electronic Tariff Filing System.

### §61.14 Method of filing publications.

(a) Publications filed electronically must be addressed to ''Secretary, Federal Communications Commission, Washington, DC 20554.'' The Electronic Tariff Filing System will accept filings 24 hours a day, seven days a week. The official filing date of a publication received by the Electronic Tariff Filing System will be determined by the date and time the transmission ends. If the transmission ends after the close of a business day, as that term is defined in §1.4(e)(2) of this Chapter, the filing will be date and time stamped as of the opening of the next business day.

(b)(1) In addition, except for issuing carriers filing tariffing fees electronically, for all tariff publications requiring fees as set forth in part 1, subpart G of this chapter, issuing carriers must submit the original of the cover letter (without attachments), FCC Form 159, and the appropriate fee to the Mellon Bank, Pittsburgh, PA at the address set forth in §1.1105 of this chapter.

(2) Issuing carriers filing tariffing fees electronically must submit the Form 159. The issuing carrier may submit the Form 159 in either of the methods set forth in paragraphs (b)(2)(i) or (b)(2)(ii) of this section:

(i) Issuing carriers submitting tariffing fees electronically may submit a paper copy of the Form 159, and the original transmittal letter to the Secretary of the Commission in lieu of the Mellon Bank, or;

(ii) Issuing carriers submitting tariffing fees electronically may submit a copy of the Form 159 electronically as an associated document with their tariff filing publication. In this instance issuing carriers must provide an electronic signature on their letter of transmittal in accordance with section 1.52 of this chapter.

(iii) Regardless of whether the Form 159 is submitted pursuant to paragraph (b)(2)(i) or (b)(2)(ii) of this section, the Form 159 should display the Electronic Audit Code in the box in the upper left hand corner marked ''reserved.'' Issuing carriers should submit these fee materials on the same date as the submission in paragraph (a) of this section.

(c) Carriers that are required to file publications electronically may not file those publications on paper or other media unless specifically required to do so by the Commission.

(d) Carriers that are required to file publications electronically need only transmit one set of files to the Commission. No other copies to any other party are required.

(e) Carriers that are required to file publications electronically must continue to comply with the format requirements set forth in part 61.

[63 FR 35540, June 30, 1998, as amended at 64 FR 46586, Aug. 26, 1999]

### § 61.15 Letters of transmittal and cover letters.

(a) All tariff publications filed with the Commission electronically must be accompanied by a letter of transmittal. All letters of transmittal must:

(1) Concisely explain the nature and purpose of the filing;

(2) Specify whether supporting information is required for the new tariff or tariff revision, and specify the Commission rule or rules governing the supporting information requirements for that filing;

(3) Contain a statement indicating the date and method of filing of the original of the transmittal as required by § 61.14(b).

(b) Carriers filing tariffs electronically pursuant to the notice requirements of section 204(a)(3) of the Communications Act shall display prominently, in the upper right hand corner of the letter of transmittal, a statement that the filing is made pursuant to that section and whether the tariff is filed on 7 or 15 days notice.

(c) Any carrier filing a new or revised tariff made on 15 days' notice or less shall include in the letter of transmittal the name, room number, street address, telephone number, and facsimile number of the individual designated by the filing carrier to receive personal or facsimile service of petitions against the filing as required under § 1.773(a)(4) of this chapter.

(d) The letter of transmittal must specifically reference by number any special permission necessary to implement the tariff publication. Special permission must be granted prior to the filing of the tariff publication and may not be requested in the transmittal letter.

(e) The letter of transmittal must be substantially in the format established in §§ 61.33(g) and 61.33(h)(1).

(f) All submissions of documents other than a new tariff or revisions to an existing tariff, such as Base Documents or Tariff Review Plans, must be accompanied by a cover letter that concisely explains the nature and purpose of the filing. Publications submitted under this paragraph are not required to submit a tariffing fee.

### § 61.16 Base documents.

(a) The Base Document is a complete tariff which incorporates all effective revisions, as of the last day of the preceding month. The Base Document should be submitted with a cover letter as specified in § 61.15(f) of this part and identified as the *Monthly Updated Base Document*.

(b) Initially, carriers that currently have tariffs on file with the commission must file a Base Document within five days of the initiation of mandatory electronic filing.

(c) Subsequently, if there have been revisions that became effective up to and including the last day of the preceding month, a new Base Document must be submitted within the first five business days of the current month that will incorporate those revisions.

### § 61.17 Method of filing applications for special permission.

(a) An application for special permission filed electronically must be addressed to ''Secretary, Federal Communications Commission, Washington, DC 20554.'' The Electronic Tariff Filing System will accept filings 24 hours a day, seven days a week. The official filing date of a publication received by the Electronic Tariff Filing System will be determined by the date and time the transmission ends. If the transmission ends after the close of a business day, as that term is defined in § 1.4(e)(2) of this chapter, the filing will be date and time stamped as of the opening of the next business day.

(b) In addition, except for issuing carriers filing tariffing fees electronically, for special permission applications requiring fees as set forth in part 1, subpart G of this chapter, issuing carriers must submit the original of the application letter (without attachments), FCC Form 159, and the appropriate fee to the Mellon Bank, Pittsburgh, PA, at the address set forth in § 1.1105 of this chapter. Issuing carriers submitting tariffing fees electronically should submit a copy of the Form 159 and the

original application letter to the Secretary of the Commission in lieu of the Mellon Bank. The Form 159 should display the Electronic Audit Code in the box in the upper left hand corner marked ''reserved''. Issuing carriers should submit these fee materials on the same day as the transmission in paragraph (a) of this section.

(c) In addition, if a carrier applies for special permission to revise joint tariffs, the application must state that it is filed on behalf of all carriers participating in the affected service. Applications must be numbered consecutively in a series separate from FCC tariff numbers, bear the signature of the officer or agent of the carrier, and be in the following format:

Application No.
(Date)
Secretary
Federal Communications Commission
Washington, DC 20554.

Attention: Common Carrier Bureau (here provide the statements required by §61.152).

(Exact name of carrier)
(Name of officer or agent)
(Title of officer or agent)

[63 FR 35540, June 30, 1998, as amended at 64 FR 46586, Aug. 26, 1999]

## Subpart C—General Rules for Nondominant Carriers

### §61.18 Scope.

The rules in this subpart apply to all nondominant carriers.

[64 FR 46587, Aug. 26, 1999]

### §61.19 Detariffing of interstate, domestic, interexchange services.

(a) Except as otherwise provided in paragraphs (b) and (c), or by Commission order, carriers that are nondominant in the provision of interstate, domestic, interexchange services shall not file tariffs for such services.

(b) Carriers that are nondominant in the provision of domestic, interstate, interexchange services are permitted to file tariffs for dial-around 1+services. For the purposes of this paragraph, dial-around 1+calls are those calls made by accessing the interexchange carrier through the use of that carrier's carrier access code.

(c) Carriers that are nondominant in the provision of domestic, interstate, interexchange services are permitted to file a tariff for such interstate service applicable to those customers who contact the local exchange carrier to designate an interexchange carrier or to initiate a change with respect to their primary interexchange carrier. Such tariff will enable the interexchange carrier to provide service to the customer until the interexchange carrier and the customer consummate a written agreement, but in no event shall the interexchange carrier provide service to its customer pursuant to such tariff for more than 45 days.

[62 FR 59604, Nov. 4, 1997. Redesignated and amended at 64 FR 46587, Aug. 26, 1999]

### §61.20 Method of filing publications.

(a) Publications sent for filing must be addressed to ''Secretary, Federal Communications Commission, Washington, DC 20554.'' The date on which the publication is received by the Secretary of the Commission (or the Mail Room where submitted by mail) is considered the official filing date.

(b)(1) In addition, except for issuing carriers filing tariffing fees electronically, for all tariff publications requiring fees as set forth in part 1, subpart G of this chapter, issuing carriers must submit the original of the cover letter (without attachments), FCC Form 159, and the appropriate fee to the Mellon Bank, Pittsburgh, PA at the address set forth in §1.1105 of this chapter. Issuing carriers submitting tariffing fees electronically should submit the Form 159 and the original cover letter to the Secretary of the Commission in lieu of the Mellon Bank. The Form 159 should display the Electronic Audit Code in the box in the upper left hand corner marked ''reserved.'' Issuing carriers should submit these fee materials on the same date as the submission in paragraph (a) of this section.

(2) International carriers must certify in their original cover letter that they are authorized under Section 214 of the Communications Act of 1934, as amended, to provide service, and reference the FCC file number of that authorization.

(c) In addition to the requirements set forth in paragraphs (a) and (b) of

this section, the issuing carrier must send a copy of the cover letter with one 3½ inch diskette or CD–ROM containing both the complete tariff and any attachments, as appropriate, to the Secretary, Federal Communications Commission. In addition, the issuing carrier must send one diskette or CD–ROM of the complete tariff and a copy of the cover letter to the commercial contractor (at its office on Commission premises), and to the Chief, Tariff and Pricing Analysis Branch. The latter should be clearly labeled as the ''Public Reference Copy.'' The issuing carrier should file the copies required by this paragraph so they will be received on the same date as the filings in paragraph (a) of this section. In cases where the a single diskette or CD–ROM does not provide sufficient capacity for the carrier's entire tariff filing, the issuing carrier may submit two or more diskettes, or two or more CD–ROMs, as necessary.

[58 FR 44460, Aug. 23, 1993, as amended at 61 FR 15726, Apr. 9, 1996. Redesignated at 61 FR 59366, Nov. 22, 1996, and further redesignated and amended at 64 FR 46587, Aug. 26, 1999]

### § 61.21 Cover letters.

(a)(1) Except as specified in § 61.32(b), all publications filed with the Commission must be accompanied by a cover letter, 8.5 by 11 inches (21.6 cm × 27.9 cm) in size, and must be plainly printed in black ink. All transmittal letters should briefly explain the nature and purpose of the filing and indicate the date and method of filing of the original cover letter, as required by § 61.20(b)(1) of this part.

(2) International carriers must certify that they are authorized under Section 214 of the Communications Act of 1934, as amended, to provide service, and reference the FCC file number of that authorization.

(b) A separate cover letter may accompany each publication, or an issuing carrier may file as many publications as desired with one cover letter.

NOTE: If a receipt for accompanying publication is desired, the cover letter must be sent in duplicate. One copy showing the date of the receipt by the Commission will then be returned to the sender.

[58 FR 44460, Aug. 23, 1993, as amended at 61 FR 15726, Apr. 9, 1996. Redesignated at 61 FR 59366, Nov. 22, 1996, and further redesignated and amended at 64 FR 46587, Aug. 26, 1999]

### § 61.22 Composition of tariffs.

(a) The tariff must be submitted on a 3½ inch (8.89 cm) diskette, or a 5 inch CD–ROM, formatted in an IBM-compatible form using either WordPerfect 5.1, Microsoft Word 6, or Microsoft Word 97 software. No diskettes shall contain more than one tariff. The diskette or CD–ROM must be submitted in ''read only'' mode. The diskette or CD–ROM must be clearly labelled with the carrier's name, Tariff Number, software used, and the date of submission. When multiple diskettes or CD–ROMs are submitted, the issuing carrier shall clearly label each diskette in the following format: ''1 of ''', ''2 of ''', etc.

(b) The tariff must contain the carrier's name, the international Section 214 authorization FCC file number (when applicable), and the information required by Section 203 of the Act.

(c)(1) Changes to a tariff must be made by refiling the entire tariff on a new diskette, with the changed material included. The carrier must indicate in the tariff what changes have been made.

(2) Any issuing carrier submitting an individual tariff that requires ten or more diskettes that wishes to revise its tariff is permitted to do so by filing a diskette containing only those pages on which the changed material is located. Any such carrier shall file a current effective version of its entire tariff on the first business day of each month. For purposes of this paragraph, ''business day'' is defined in § 1.4(e)(2) of this chapter.

(d) Domestic and international nondominant carriers subject to the provisions of this section are not subject to the tariff filing requirements of § 61.54.

(e)(1) For contract-based tariffs defined in § 61.3(m), a separate letter of transmittal may accompany each tariff filed, or the above format may be modified for filing as many publications as may be desired with one transmittal letter. The transmittals must be numbered in a series separate from

transmittals for non-contract tariff filing. Numbers must appear on the face of the transmittal and be in the form of ''CTT No. '', using CTT as an abbreviation for contract-based tariff transmittals, or some similar form that indicates that the transmittal is a contract-based tariff transmittal. Contract-based tariffs must also be numbered in a series separate from non-contract-based tariffs. Numbers must be in the form of ''CT No. '', using CT as an abbreviation for contract-based tariffs, or some similar form that indicates that the tariff is a contract-based tariff. Each contract-based tariff must be assigned a separate number. Transmittals and tariffs subject to this paragraph shall be filed beginning with the number ''1'' and shall be numbered consecutively.

(2) Composition of contract-based tariffs shall comply with §§61.54 (b) through (i).

(3) Contract-based tariffs shall include the following:

(i) The term of the contract, including any renewal options;

(ii) A brief description of each of the services provided under the contract;

(iii) Minimum volume commitments for each service;

(iv) The contract price for each service or services at the volume levels committed to by the customers;

(v) A general description of any volume discounts built into the contract rate structure; and

(vi) A general description of other classifications, practices and regulations affecting the contract rate.

[58 FR 44460, Aug. 23, 1993; 58 FR 48323, Sept. 15, 1993, as amended at 61 FR 15727, Apr. 9, 1996. Redesignated at 61 FR 59366, Nov. 22, 1996, and further redesignated and amended at 64 FR 46587, Aug. 26, 1999]

### §61.23 Notice requirements.

(a) Every proposed tariff filing must bear an effective date and, except as otherwise provided by regulation, special permission, or Commission order, must be made on at least the number of days notice specified in this section.

(b) Notice is accomplished by filing the proposed tariff changes with the Commission. Any period of notice specified in this section begins on and includes the date the tariff is received by the Commission, but does not include the effective date. In computing the notice period required, all days including Sundays and holidays must be counted.

(c) All tariff filings of domestic and international non-dominant carriers must be made on at least one day's notice.

[58 FR 44460, Aug. 23, 1993, as amended at 61 FR 15727, Apr. 9, 1996. Redesignated at 61 FR 59366, Nov. 22, 1996, and further redesignated and amended at 64 FR 46587, 46588, Aug. 26, 1999]

### §61.25 References to other instruments.

In addition to the cross-references permitted pursuant to §61.74, a non-dominant carrier may cross-reference in its tariff publication only the rate provisions of another carrier's FCC tariff publication, provided that the following conditions are met:

(a) The tariff being cross-referenced must be on file with the Commission and in effect;

(b) The issuing carrier must specifically identify in its tariff the cross-referenced tariff by Carrier Name and FCC Tariff Number;

(c) The issuing carrier must specifically identify in its tariff the rates being cross-referenced so as to leave no doubt as to the exact rates that will apply, including but not limited to any applicable credits, discounts, promotions; and

(d) The issuing carrier must keep its cross-references current.

[64 FR 46588, Aug. 26, 1999]

## Subpart D—General Tariff Rules for International Dominant Carriers

### §61.28 International dominant carrier tariff filing requirements.

(a) Any carrier classified as dominant for the provision of particular international communications services on a particular route due only to a foreign carrier affiliation pursuant to §63.10 of this Chapter shall file tariffs for those services on at least one day's notice without cost support.

(b) Any carrier classified as dominant for the provision of particular international communications services on a

particular route for any reason other than a foreign carrier affiliation pursuant to § 63.10 shall file tariffs for those services pursuant to the notice and cost support requirements for tariff filings of dominant domestic carriers, as set forth in subpart E of this part.

(c) Other than the notice and cost support requirements set forth in paragraphs (a) and (b) of this section, all tariff filing requirements applicable to all carriers classified as dominant for the provision of particular international communications services on a particular route are set forth in subpart C of this part.

[64 FR 46588, Aug. 26, 1999]

## Subpart E—General Rules for Dominant Carriers

### § 61.31 Scope.

The rules in this subpart apply to all dominant carriers.

[64 FR 46588, Aug. 26, 1999]

### § 61.32 Method of filing publications.

(a) Publications sent for filing must be addressed to ''Secretary, Federal Communications Commission, Washington, DC 20554.'' The date on which the publication is received by the Secretary of the Commission (or the Mail Room where submitted by mail) is considered the official filing date.

(b) In addition, except for issuing carriers filing tariffing fees electronically, for all tariff publications requiring fees as set forth in part 1, subpart G of this chapter, issuing carriers must submit the original of the transmittal letter (without attachments), FCC Form 159, and the appropriate fee to the Mellon Bank, Pittsburgh, PA, at the address set forth in § 1.1105 of this chapter. Issuing carriers submitting tariffing fees electronically should submit the Form 159 and the original cover letter to the Secretary of the Commission in lieu of the Mellon Bank. The Form 159 should display the Electronic Audit Code in the box in the upper left hand corner marked ''reserved.'' Issuing carriers should submit these fee materials on the same date as the submission in paragraph (a) of this section.

(c) In addition to the requirements set forth in paragraphs (a) and (b) of this section, the issuing carrier must send a copy of the transmittal letter with two copies of the proposed tariff pages and all attachments, including the supporting information specified in § 61.38 or § 61.49, as appropriate, to the Secretary, Federal Communications Commission. In addition, the issuing carrier must send a copy of the publication, supporting information specified in § 61.38 or § 61.49, as appropriate, and transmittal letter to the commercial contractor (at its office on Commission premises), and to the Chief, Tariff and Pricing Analysis Branch. The latter should be clearly labeled as the ''Public Reference Copy.'' The copies of supporting information required here are in addition to those required by § 61.38(c). The issuing carrier must file the copies required by this paragraph so they will be received on the same date as the filings in paragraph (a).

[55 FR 19173, May 8, 1990, as amended at 64 FR 46588, 46593, Aug. 26, 1999]

### § 61.33 Letters of transmittal.

(a) Except as specified in § 61.32(b), all publications filed on paper with the Commission must be numbered consecutively by the issuing carrier beginning with Number 1, and must be accompanied by a letter of transmittal, A4 (21 cm x 29.7 cm) or 8½ by 11 inches (21.6 cm x 27.9 cm) in size. All letters of transmittal must

(1) Concisely explain the nature and purpose of the filing;

(2) Specify whether supporting information under § 61.38 is required;

(3) State whether copies have been delivered to the Commercial Contractor and Chief, Tariff and Pricing Analysis Branch as required by § 61.32, and

(4) Contain a statement indicating the date and method of filing of the original of the transmittal letter as required by § 61.32(b), and the date and method of filing the copies as required by § 61.32 (a) and (c).

(b) In addition to the requirements set forth in paragraph (a) of this section, any local exchange carrier choosing to file an Access Tariff under § 61.39 must include in the transmittal:

(1) A summary of the filing's basic rates, terms and conditions;

(2) A statement concerning whether any prior Commission facility authorization necessary to the implementation of the tariff has been obtained; and

(3) A statement that the filing is made pursuant to §61.39.

(c) In addition to the requirements set forth in paragraph (a) of this section, any carrier filing a price cap tariff must include in the letter of transmittal a statement that the filing is made pursuant to §61.49.

(d) Tariffs filed pursuant to section 204(a)(3) of the Communications Act shall display prominently in the upper right hand corner of the letter of transmittal a statement that the filing is made pursuant to that section and whether it is being filed on 7- or 15-days' notice.

(e) In addition to the requirements set forth in paragraph (a) of this section, any carrier filing a new or revised tariff made on 15 days' notice or less shall include in the letter of transmittal, the name, room number, street address, telephone number, and facsimile number of the individual designated by the filing carrier to receive personal or facsimile service of petitions against the filing as required under §1.773(a)(4) of this chapter.

(f) In addition to the requirements set forth in paragraphs (a), (b), and (c) of this section, the letter of transmittal must specifically reference by number any special permission necessary to implement the tariff publication. Special permission must be granted prior to the filing of the tariff publication, and may not be requested in the transmittal letter.

(g) The letter of transmittal must be substantially in the following format.

(Exact name of carrier in full)
(Post Office Address)
, 19 .

(Date)
Transmittal No.
Secretary,
Federal Communications Commission
Washington, DC 20554

Attention: Common Carrier Bureau.

The accompanying tariff (or other publication) issued by , and bearing FCC No. , effective , 19 , is sent to you for filing in compliance with the requirements of the Communications Act of 1934, as amended. (Here give the additional information required.)

(Name of issuing officer or agent)

(Title)

(h)(1) A separate letter of transmittal may accompany each publication, or the above format may be modified to provide for filing as many publications as desired with one transmittal letter.

(2) [Reserved]

NOTE TO §61.33: If a receipt for accompanying publication is desired, the letter of transmittal must be sent in duplicate. One copy showing the date of receipt by the Commission will then be returned to the sender.

[55 FR 19173, May 8, 1990, as amended by 56 FR 55239, Oct. 25, 1991; 58 FR 17530, Apr. 5, 1993; 58 FR 44906, Aug. 25, 1993; 62 FR 5777, Feb. 7, 1997; 64 FR 46588, 46593, Aug. 26, 1999]

## §61.38 Supporting information to be submitted with letters of transmittal.

(a) *Scope.* This section applies to dominant carriers whose gross annual revenues exceed $500,000 for the most recent 12 month period of operations or are estimated to exceed $500,000 for a representative 12 month period. Local exchange carriers serving 50,000 or fewer access lines in a given study area that are described as subset 3 carriers in §69.602 of this chapter may submit Access Tariff filings for that study area pursuant to either this section or §61.39. However, the Commission may require any carrier to submit such information as may be necessary for a review of a tariff filing. This section (other than the preceding sentence of this paragraph) shall not apply to tariff filings proposing rates for services identified in §61.42 (d), (e), and (g).

(b) *Explanation and data supporting either changes or new tariff offerings.* The material to be submitted for a tariff change which affects rates or charges or for a tariff offering a new service, must include an explanation of the changed or new matter, the reasons for the filing, the basis of ratemaking employed, and economic information to support the changed or new matter.

(1) For a tariff change the carrier must submit the following, including complete explanations of the bases for the estimates.

(i) A cost of service study for all elements for the most recent 12 month period;

(ii) A study containing a projection of costs for a representative 12 month period;

(iii) Estimates of the effect of the changed matter on the traffic and revenues from the service to which the changed matter applies, the carrier's other service classifications, and the carrier's overall traffic and revenues. These estimates must include the projected effects on the traffic and revenues for the same representative 12 month period used in (ii) above.

(2) For a tariff filing offering a new service, the carrier must submit the following, including complete explanations of the bases for the estimates.

(i) A study containing a projection of costs for a representative 12 month period; and

(ii) Estimates of the effect of the new matter on the traffic and revenues from the service to which the new matter applies, the carrier's other service classifications, and the carrier's overall traffic and revenues. These estimates must include the projected effects on the traffic and revenues for the same representative 12 month period used in paragraph (b)(2)(i) of this section.

(3) [Reserved]

(4) For a tariff that introduces a system of density pricing zones, as described in § 69.123 of this chapter, the carrier must, before filing its tariff, submit a density pricing zone plan including, *inter alia,* documentation sufficient to establish that the system of zones reasonably reflects cost-related characteristics, such as the density of total interstate traffic in central offices located in the respective zones, and receive approval of its proposed plan.

(c) *Working papers and statistical data.* (1) Concurrently with the filing of any tariff change or tariff filing for a service not previously offered, the Chief, Tariff and Pricing Analysis Branch must be provided two sets of working papers containing the information underlying the data supplied in response to paragraph (b) of this section, and a clear explanation of how the working papers relate to that information.

(2) All statistical studies must be submitted and supported in the form prescribed in § 1.363 of the Commission's Rules.

(d) *Form and content of additional material to be submitted with certain rate increases.* In the circumstances set out in paragraphs (d)(1) and (2) of this section, the filing carrier must submit all additional cost, marketing and other data underlying the working papers to justify a proposed rate increase. The carrier must submit this information in suitable form to serve as the carrier's direct case in the event the rate increase is set by the Commission for investigation.

(1) Rate increases affecting single services or tariffed items.

(i) A rate increase in any service or tariffed item which results in more than $1 million in additional annual revenues, calculated on the basis of existing quantities in service, without regard to the percentage increase in such revenues; or

(ii) A single rate increase in any service or tariffed item, or successive rate increases in the same service or tariffed item within a 12 month period, either of which results in:

(A) At least a 10 percent increase in annual revenues from that service or tariffed item, and

(B) At least $100,000 in additional annual revenues, both calculated on the basis of existing quantities in service.

(2) Rate increases affecting more than one service or tariffed item.

(i) A general rate increase in more than one service or tariffed item occurring at one time, which results in more than $1 million in additional revenues calculated on the basis of existing quantities in service, without regard to the percentage increase in such revenues; or

(ii) A general rate increase in more than one service or tariffed item occurring at one time, or successive general rate increases in the same services or tariffed items occurring within a 12 month period, either of which results in:

(A) At least a 10 percent increase in annual revenues from those services or tariffed items, and

(B) At least $100,000 in additional annual revenues, both calculated on the basis of existing quantities in service.

(e) *Submission of explanation and data by connecting carriers.* If the changed or new matter is being filed by the issuing carrier at the request of a connecting carrier, the connecting carrier must provide the data required by paragraphs (b) and (c) of this section on the date the issuing carrier files the tariff matter with the Commission.

(f) *Copies of explanation and data to customers.* Concurrently with the filing of any rate for special construction (or special assembly equipment and arrangements) developed on the basis of estimated costs, the offering carrier must transmit to the customer a copy of the explanation and data required by paragraphs (b) and (c) of this section.

(g) On each page of cost support material submitted pursuant to this section, the carrier shall indicate the transmittal number under which that page was submitted.

[49 FR 40869, Oct. 18, 1984, as amended at 53 FR 36289, Sept. 19, 1988; 54 FR 19841, May 8, 1989; 55 FR 42382, Oct. 19, 1990; 56 FR 55239, Oct. 25, 1991; 57 FR 54330, Nov. 18, 1992; 58 FR 36147, July 6, 1993; 58 FR 48762, Sept. 17, 1993; 64 FR 46588, 46593, Aug. 26, 1999]

### §61.39 Optional supporting information to be submitted with letters of transmittal for Access Tariff filings effective on or after April 1, 1989, by local exchange carriers serving 50,000 or fewer access lines in a given study area that are described as subset 3 carriers in §69.602.

(a) *Scope.* This section provides for an optional method of filing for any local exchange carrier that is described as subset 3 carrier in §69.602, which elects to issue its own Access Tariff for a period commencing on or after April 1, 1989, and which serves 50,000 or fewer access lines in a study area as determined under §36.611(a)(8) of this chapter. However, the Commission may require any carrier to submit such information as may be necessary for review of a tariff filing. This section (other than the preceding sentence of this paragraph) shall not apply to tariff filings of local exchange carriers subject to price cap regulation.

(b) *Explanation and data supporting tariff changes.* The material to be submitted to either a tariff change or a new tariff which affects rates or charges must include an explanation of the filing in the transmittal as required by §61.33. The basis for ratemaking must comply with the following requirements. Except as provided in paragraph (b)(5) of this section, it is not necessary to submit this supporting data at the time of filing. However, the local exchange carrier should be prepared to submit the data promptly upon reasonable request by the Commission or interested parties.

(1) For a tariff change, the local exchange carrier that is a cost schedule carrier must propose Tariff Sensitive rates based on the following:

(i) For the first period, a cost of service study for Traffic Sensitive elements for the most recent 12 month period with related demand for the same period.

(ii) For subsequent filings, a cost of service study for Traffic Sensitive elements for the total period since the local exchange carrier's last annual filing, with related demand for the same period.

(2) For a tariff change, the local exchange company that is an average schedule carrier must propose Traffic Sensitive rates based on the following:

(i) For the first period, the local exchange carrier's most recent annual Traffic Sensitive settlement from the National Exchange Carrier Association pool.

(ii) For subsequent filings, an amount calculated to reflect the Traffic Sensitive average schedule pool settlement the carrier would have received if the carrier had continued to participate, based upon the most recent average schedule formulas approved by the Commission.

(3) For a tariff change, the local exchange carrier that is a cost schedule carrier must propose Common Line rates based on the following:

(i) For the first biennial filing, the common line revenue requirement shall be determined by a cost of service study for the most recent 12-month period. Subscriber line charges shall be based on cost and demand data for the same period. Carrier common line rates shall be determined by the following formula:

$$\frac{\text{CCL Rev Req}}{\text{CCL MOU}_b * (1+h/2)^2}$$

where:

$$h = \frac{\text{CCL MOU}_1}{\text{CCL MOU}_0} - 1$$

And where:

*CCL Rev Req* = carrier common line revenue requirement for the most recent 12-month period;

*CCL* $MOU_b$ = carrier common line minutes of use for the most recent 12-month period;

*CCL* $MOU_1$ = CCL $MOU_b$; and

*CCL* $MOU_0$ = carrier common line minutes of use for the 12-month period preceding the most recent 12-month period.

(ii) For subsequent biennial filings, the common line revenue requirement shall be determined by a cost of service study for the most recent 24-month period. Subscriber line charges shall be based on cost and demand data for the same period. Carrier common line rates shall be determined by the following formula:

$$\frac{\text{CCL Rev Req}}{\text{CCL MOU}_b * (1+h/2)^{5/2}}$$

Where:

$$h = \frac{\text{CCL MOU}_1}{\text{CCL MOU}_0} - 1$$

And where:

*CCL Rev Req* = carrier common line revenue requirement for the most recent 24-month period;

*CCL* $MOU_b$ = carrier common line minutes of use for the most recent 24-month period;

*CCL* $MOU_1$ = carrier common line minutes of use for the 12-month period; and

*CCL* $MOU_0$ = carrier common line minutes of use for the 12-month period preceding the most recent 12-month period.

(4) For a tariff change, the local exchange carrier which is an average schedule carrier must propose common line rates based on the following:

(i) For the first biennial filings, the common line revenue requirement shall be determined by the local exchange carrier's most recent annual Common Line settlement from the National Exchange Carrier Association. Subscriber line charges shall be based on cost and demand data for the same period. Carrier common line rates shall be determined by the following formula:

$$\frac{\text{CCL Rev Req}}{\text{CCL MOU}_b * (1+h/2)^2}$$

Where:

$$h = \frac{\text{CCL MOU}_1}{\text{CCL MOU}_0} - 1$$

And where:

*CCL Rev Req* = carrier common line settlement for the most recent 12-month period;

*CCL* $MOU_b$ = carrier common line minutes of use for the most recent 12-month period;

*CCL* $MOU_1$ = *CCL* $MOU_b$; and

*CCL* $MOU_0$ = carrier common line minutes of use for the 12-month period preceding the most recent 12-month period.

(ii) For subsequent biennial filings, the common line revenue requirement shall be an amount calculated to reflect the average schedule pool settlements the carrier would have received if the carrier had continued to participate in the carrier common line pool, based upon the average schedule Common Line formulas developed by the National Exchange Carrier Association for the most recent 24-month period. Subscriber line charges shall be based on cost and demand data for the same period. Carrier common line rates shall be determined by the following formula:

$$\frac{\text{CCL Rev Req}}{\text{CCL MOU}_b * (1+h/2)^{5/2}}$$

Where:

$$h = \frac{\text{CCL MOU}_1}{\text{CCL MOU}_0} - 1$$

And where:

*CCL Rev Req* = carrier common line settlement for the most recent 24-month period;

*CCL* $MOU_b$ = carrier common line minutes of use for the most recent 24-month period;

*CCL* $MOU_1$ = carrier common line minutes of use for the most recent 12-month period; and

*CCL* $MOU_0$ = carrier common line minutes of use for the 12-month period preceding the most recent 12-month period.

(5) For End User Common Line charges included in a tariff pursuant to this Section, the local exchange carrier must provide supporting information for the two-year historical period with its letter of transmittal in accordance with §61.38.

(c) *Maximum allowable rate of return.* Local exchange carriers filing tariffs under this section are not required to comply with §§65.700 through 65.701, inclusive, of the Commission's Rules, except with respect to periods during which tariffs were not subject to this section. The Commission may require any carrier to submit such information if it deems it necessary to monitor the carrier's earnings. However, rates must be calculated based on the local exchange carrier's prescribed rate of return applicable to the period during which the rates are effective.

(d) Rates for a new service that is the same as that offered by a price cap regulated local exchange carrier providing service in an adjacent serving area are deemed presumptively lawful, if the proposed rates, in the aggregate, are no greater than the rates established by the price cap local exchange carrier. Tariff filings made pursuant to this paragraph must include the following:

(1) A brief explanation of why the service is like an existing service offered by a geographically adjacent price cap regulated local exchange carrier; and

(2) Data to establish compliance with this subsection that, in aggregate, the proposed rates for the new service are no greater than those in effect for the same or comparable service offered by that same geographically adjacent price cap regulated local exchange carrier. Compliance may be shown through submission of applicable tariff pages of the adjacent carrier; a showing that the serving areas are adjacent; any necessary explanations and work sheets.

(e) Average schedule companies filing pursuant to this section shall retain their status as average schedule companies.

(f) On each page of cost support material submitted pursuant to this section, the carrier shall indicate the transmittal number under which that page was submitted.

[52 FR 26682, July 16, 1987, as amended at 53 FR 36289, Sept. 19, 1988; 55 FR 42382, Oct. 19, 1990; 58 FR 36147, July 6, 1993; 62 FR 31004, June 6, 1997; 64 FR 46588, Aug. 26, 1999]

### §61.40 Private line rate structure guidelines.

(a) The Commission uses a variety of tools to determine whether a carrier's private line tariffs are just, reasonable, and nondiscriminatory. The carrier's burden of cost justification can be reduced when its private line rate structures comply with the following five guidelines.

(1) Rate structures for the same or comparable services should be integrated;

(2) Rate structures for the same or comparable services should be consistent with one another;

(3) Rate elements should be selected to reflect market demand, pricing convenience for the carrier and customers, and cost characteristics; a rate element which appears separately in one rate structure should appear separately in all other rate structures;

(4) Rate elements should be consistently defined with respect to underlying service functions and should be consistently employed through all rate structures; and

(5) Rate structures should be simple and easy to understand.

(b) The guidelines do not preclude a carrier, in a given case when a private line tariff does not comply with these guidelines, from justifying its departure from the guidelines and showing that its tariff is just, reasonable, and nondiscriminatory.

### §61.41 Price cap requirements generally.

(a) Sections 61.42 through 61.49 shall apply as follows:

(1) [Reserved]

(2) To such local exchange carriers as specified by Commission order, and to all local exchange carriers, other than average schedule companies, that are affiliated with such carriers; and

(3) On an elective basis, to local exchange carriers, other than those specified in paragraph (a)(2) of this section, that are neither participants in any

Association tariff, nor affiliated with any such participants, except that affiliation with average schedule companies shall not bar a carrier from electing price cap regulation provided the carrier is otherwise eligible.

(b) If a telephone company, or any one of a group of affiliated telephone companies, files a price cap tariff in one study area, that telephone company and its affiliates, except its average schedule affiliates, must file price cap tariffs in all their study areas.

(c) The following rules in this paragraph (c) apply to telephone companies subject to price cap regulation, as that term is defined in § 61.3(ee), which are involved in mergers, acquisitions, or similar transactions.

(1) Any telephone company subject to price cap regulation that is a party to a merger, acquisition, or similar transaction shall continue to be subject to price cap regulation notwithstanding such transaction.

(2) Where a telephone company subject to price cap regulation acquires, is acquired by, merges with, or otherwise becomes affiliated with a telephone company that is not subject to price cap regulation, the latter telephone company shall become subject to price cap regulation no later than one year following the effective date of such merger, acquisition, or similar transaction and shall accordingly file price cap tariffs to be effective no later than that date in accordance with the applicable provisions of this part 61.

(3) Notwithstanding the provisions of § 61.41(c)(2), when a telephone company subject to price cap regulation acquires, is acquired by, merges with, or otherwise becomes affiliated with a telephone company that qualifies as an ''average schedule'' company, the latter company may retain its ''average schedule'' status or become subject to price cap regulation in accordance with § 69.3(i)(3) of this chapter and the requirements referenced in that section.

(d) Local exchange carriers that become subject to price cap regulation as that term is defined in § 61.3(ee) shall not be eligible to withdraw from such regulation.

[55 FR 42382, Oct. 19, 1990; 55 FR 50558, Dec. 7, 1990, as amended at 56 FR 55239, Oct. 25, 1991; 64 FR 46589, Aug. 26, 1999; 65 FR 38695, June 21, 2000; 65 FR 57741, Sept. 26, 2000]

### § 61.42 Price cap baskets and service categories.

(a)–(c) [Reserved]

(d) Each local exchange carrier subject to price cap regulation shall establish baskets of services as follows:

(1) A basket for the common line, marketing, and certain residual interconnection charge interstate access elements as described in §§ 69.115, 69.152, 69.153, 69.154, 69.155, 69.156, and 69.157 of this chapter. For purposes of §§ 61.41 through 61.49, this basket shall be referred to as the ''CMT basket.''

(2) A basket for traffic sensitive switched interstate access elements. For purposes of §§ 61.41 through 61.49 of this chapter, this basket shall be referred to as the ''traffic-sensitive basket.''

(3) A basket for trunking services as described in §§ 69.110, 69.111, 69.112, 69.125(b), 69.129, and 69.155 of this chapter. For purposes of §§ 61.41 through 61.49, this basket shall be referred to as the ''trunking basket.''

(4)(i) To the extent that a local exchange carrier specified in § 61.41(a) (2) or (3) offers interstate interexchange services that are not classified as access services for the purpose of part 69 of this chapter, such exchange carrier shall establish a fourth basket for such services. For purposes of §§ 61.41 through 61.49 of this chapter, this basket shall be referred to as the ''interexchange basket.''

(ii) If a price cap carrier has implemented interLATA and intraLATA toll dialing parity everywhere it provides local exchange services at the holding company level, that price cap carrier may file a tariff revision to remove corridor and interstate intraLATA toll services from its interexchange basket.

(5) A basket for special access services as described in § 69.114 of this chapter.

(e)(1) The traffice sensitive switched interstate access basket shall contain

such services as the Commission shall permit or require, including the following service categories:

(i) Local switching as described in §69.106(f) of this chapter;

(ii) Information, as described in §69.109 of this chapter;

(iii) Data base access services;

(iv) Billing name and address, as described in §69.128 of this chapter;

(v) Local switching trunk ports, as described in §69.106(f)(1) of this chapter; and

(vi) Signalling transfer point port termination, as described in §69.125(c) of this chapter.

(2) The trunking basket shall contain such switched transport as the Commission shall permit or require, including the following service categories and subcategories:

(i) Voice grade entrance facilities, voice grade direct-trunked transport, voice grade dedicated signalling transport,

(ii) High capacity flat-rated transport, including the following service subcategories:

(A) DS1 entrance facilities, DS1 direct-trunked transport, DS1 dedicated signalling transport, and

(B) DS3 entrance facilities, DS3 direct-trunked transport, DS3 dedicated signalling transport.

(iii) Tandem-switched transport, as described in §69.111 of this chapter; and

(iv) Signalling for tandem switching, as described in §69.129 of this chapter.

(3) The special access basket shall contain special access services as the Commission shall permit or require, including the following service categories and subcategories:

(i) Voice grade special access, WATS special access, metallic special access, and telegraph special access services;

(ii) Audio and video services;

(iii) High capacity special access, and DDS services, including the following service subcategories:

(A) DS1 special access services; and

(B) DS3 special access services;

(iv) Wideband data and wideband analog services.

(f) Each local exchange carrier subject to price cap regulation shall exclude from its price cap baskets such services or portions of such services as the Commission has designated or may hereafter designate by order.

(g) New services, other than those within the scope of paragraph (f) of this section, must be included in the affected basket at the first annual price cap tariff filing following completion of the base period in which they are introduced. To the extent that such new services are permitted or required to be included in new or existing service categories within the assigned basket, they shall be so included at the first annual price cap tariff filing following completion of the base period in which they are introduced.

[54 FR 19842, May 8, 1989, as amended at 55 FR 42382, Oct. 19, 1990; 55 FR 50558, Dec. 7, 1990; 56 FR 5956, Feb. 14, 1991; 56 FR 55239, Oct. 25, 1991; 57 FR 54718, Nov. 20, 1992; 58 FR 7868, Feb. 10, 1993; 58 FR 29552, May 21, 1993; 58 FR 31914, June 7, 1993; 58 FR 36145, July 6, 1993; 59 FR 10301, Mar. 4, 1994; 59 FR 32930, June 27, 1994; 60 FR 4569, Jan. 24, 1995; 60 FR 13639, Mar. 14, 1995; 60 FR 52346, Oct. 6, 1995; 62 FR 31930, June 11, 1997; 64 FR 46589, Aug. 26, 1999; 64 FR 51265, Sept. 22, 1999; 65 FR 38695, June 21, 2000]

### §61.43 Annual price cap filings required.

Carriers subject to price cap regulation shall submit annual price cap tariff filings that propose rates for the upcoming tariff year, that make appropriate adjustments to their PCI, API, and SBI values pursuant to §§61.45 through 61.47, and that incorporate new services into the PCI, API, or SBI calculations pursuant to §§61.45(g), 61.46(b), and 61.47 (b) and (c). Carriers may propose rate, PCI, or other tariff changes more often than annually, consistent with the requirements of §61.59.

[64 FR 46589, Aug. 26, 1999]

### §61.44 [Reserved]

### §61.45 Adjustments to the PCI for Local Exchange Carriers.

(a) Local exchange carriers subject to price cap regulation shall file adjustments to the PCI for each basket as part of the annual price cap tariff filing, and shall maintain updated PCIs to reflect the effect of mid-year exogenous cost changes.

(b)(1)(i) Adjustments to local exchange carrier PCIs, in those carriers' annual access tariff filings, the traffic

sensitive basket described in §61.42(d)(2), the trunking basket described in §61.42(d)(3), the special access basket described in §61.42(d)(5) and the Interexchange Basket described in §61.42(d)(4)(i), shall be made pursuant to the following formula:

''$PCI_t = PCI_{t-1}[1+w[GDP—PI—X] + Z/R]$.''

$PCI_{t-1} = PCI_{t-1}[1+w[GDP-PI-X] + Z/R]$

Where the terms in the equation are described:

GDP–PI = For annual filings only, the percentage change in the GDP–PI between the quarter ending six months prior to the effective date of the new annual tariff and the corresponding quarter of the previous year. For all other filings, the value is zero.

X = For the CMT, traffic sensitive, and trunking baskets, for annual filings only, the factor is set at the level prescribed in paragraphs (b)(1)(ii) and (iii) of this section. For the interexchange basket, for annual filings only, the factor is set at the level prescribed in paragraph (b)(1)(v) of this section. For the special access basket, for annual filings only, the factor is set at the level prescribed in paragraph (b)(1)(iv) of this section. For all other filings, the value is zero.

g = For annual filings for the CMT basket only, the ratio of minutes of use per access line during the base period, to minutes of use per access line during the previous base period, all minus 1.

Z = The dollar effect of current regulatory changes when compared to the regulations in effect at the time the PCI was updated to $PCI_{t-1}$, measured at base period level of operations.

Targeted Reduction = the actual possible dollar value of the (GDP–PI—X) reductions that will be targeted to the ATS Charge pursuant to §61.45(i)(3). The reductions calculated by applying the (GDP–PI—X) portion of the formula to the CCL element within the CMT basket will contain the ''g'' component, as defined above.

R = Base period quantities for each rate element ''I'', multiplied by the price for each rate element ''I'' at the time the PCI was updated to $PCI_{t-1}$.

w = R + Z, all divided by R (used for the traffic sensitive, trunking, and special access baskets).

$w_{ix}$ = R—(access rate in effect at the time the PCI was updated to $PCI_{t-1}$ * base period demand) + Z, all divided by R.

$PCI_t$ = The new PCI value.

$PCI_{t-1}$ = the immediately preceding PCI value.

(b)(1)(ii) The X value applicable to the baskets specified in §§61.42(d)(1), (d)(2), and (d)(3), shall be 6.5%, to the extent necessary to reduce a tariff entity's ATS charge to its Target Rate as set forth in §61.3(qq). Once an price cap local exchange carrier tariff entity's ATS Charge is equal to the Target Rate as set forth in §61.3(qq) for the first time (the former NYNEX telephone companies may be treated as a separate tariff entity), then, except as provided in paragraph (b)(1)(iii) of this section, X is equal to GDP–PI and no further reductions will be mandated (*i.e.*, if applying the full X-factor reduction for a given year would reduce the ATS charge below the Target Rate as set forth in §61.3 (qq), the amount of X-factor reduction applied that year will be the amount necessary to reach the Target Rate as set forth in §61.3 (qq)). A filing entity does not reach the Target Rate as set forth in §61.3(qq) in any year in which it exercises an exogenous adjustment pursuant to §61.45(d)(vii). For companies with separate tariff entities under a single price cap, the following rules shall apply:

(A) Targeting amounts as defined in §61.45(i)(1)(i) shall be identified separately, using the revenue for each of the tariff entities under the cap.

(B) Each tariff entity shall only be required to use the amount of targeting necessary to get to the Target Rate as set forth in §61.3 (qq).

(b)(1)(iii)(A) Except as provided in paragraph (b)(1)(iii)(B) of this section, once the Tariff Entity's Target Rate as set forth in §61.3 (qq) is achieved, the X-factor for the CMT basket will equal GDP–PI as long as GDP–PI is less than or equal to 6.5% and greater than 0%. If GDP–PI is greater than 6.5%, and an entity has eliminated its CCL and multi-line business PICCs charges, the

X-factor for the CMT basket will equal 6.5%, and all End User Common Line charges, rates and nominal caps, will be increased by the difference between GDP–PI and the 6.5% X-factor. If GDP–PI is less than 0, the X-factor for the CMT basket will be 0.

(B) For tariff filing entities with a Target Rate of $0.0095, or for the portion of a filing entity consolidated pursuant to §61.48(o) that, prior to such consolidation, had a Target Rate of $0.0095, in which the ATS charge has achieved the Target Rate but in which the carrier common line (CCL) charge has not been eliminated, the X-factor for the CMT basket will be 6.5% until the earlier of June 30, 2004, or until CCL charges are eliminated pursuant to paragraph (i)(4) of this section. Thereafter, in any filing entity in which a CCL charge remains after July 1, 2004, the X-factor for the CMT basket will be determined pursuant to paragraph (b)(1)(iii)(A) of this section as if CCL charges were eliminated.

(b)(1)(iv) For the special access basket specified in §61.42(d)(5), the value of X shall be 3.0% for the 2000 annual filing. The value of X shall be 6.5% for the 2001, 2002 and 2003 annual filings. Starting in the 2004 annual filing, X shall be equal to GDP–PI for the special access basket.

(b)(1)(v) For the interexchange basket specified in §61.42(d)(4), the value of X shall be 3.0% for all annual filings.

(b)(2) Adjustments to price cap local exchange carrier PCIs and average price cap CMT revenue per line, in tariff filings other than the annual access tariff filing, for the CMT basket described in §61.42(d)(1), the traffic sensitive basket described in §61.42(d)(2), the trunking basket described in §61.42(d)(3), the interexchange basket described in §61.42(d)(4), and the special access basket described in §61.42(d)(5), shall be made pursuant to the formulas set forth in paragraph (b)(1)(i) of this section, except that the ''w(GDP–PI—X)'' component of those PCI formulas shall not be employed.

(c) Effective July 1, 2000, the prices of the CMT basket rate elements, excluding special access surcharges under §69.115 of this chapter and line ports in excess of basic under §69.157 of this chapter, shall be set based upon Average Price Cap CMT Revenue per Line month.

(d) The exogenous cost changes represented by the term ''Z'' in the formula detailed in paragraph (b)(1)(i) of this section shall be limited to those cost changes that the Commission shall permit or require by rule, rule waiver, or declaratory ruling.

(1) Subject to further order of the Commission, those exogenous changes shall include cost changes caused by:

(i) The completion of the amortization of depreciation reserve deficiencies;

(ii) Such changes in the Uniform System of Accounts, including changes in the Uniform System of Accounts requirements made pursuant to §32.16 of this chapter, as the Commission shall permit or require be treated as exogenous by rule, rule waiver, or declaratory ruling;

(iii) Changes in the Separations Manual;

(iv) [Reserved]

(v) The reallocation of investment from regulated to nonregulated activities pursuant to §64.901 of this chapter;

(vi) Such tax law changes and other extraordinary cost changes as the Commission shall permit or require be treated as exogenous by rule, rule waiver, or declaratory ruling;

(vii) Retargeting the PCI to the level specified by the Commission for carriers whose base year earnings are below the level of the lower adjustment mark, subject to the limitation in §69.731 of this chapter. The allocation of LFAM amounts will be allocated pursuant to §61.45(d)(3). This section shall not be applicable to tariff filings during the tariff year beginning July 1, 2000, but is applicable in subsequent years;

(viii) Inside wire amortizations;

(ix) The completion of amortization of equal access expenses.

(2) Local exchange carriers specified in §§61.41(a)(2) or (a)(3) shall, in their annual access tariff filing, recognize all exogenous cost changes attributable to modifications during the coming tariff year in their Subscriber Plant Factor and the Dial Equipment Minutes factor, and completions of inside wire amortizations and reserve deficiency amortizations.

(3) Exogenous cost changes shall be apportioned on a cost-causative basis between price cap services as a group, and excluded services as a group. Total exogenous cost changes thus attributed to price cap services shall be recovered from services other than those used to calculate the ATS charge.

(e) [Reserved]

(f) The exogenous costs caused by new services subject to price cap regulation must be included in the appropriate PCI calculations under paragraphs (b) and (c) of this section beginning at the first annual price cap tariff filing following completion of the base period in which such services are introduced.

(g) In the event that a price cap tariff becomes effective, which tariff results in an API value (calculated pursuant to § 61.46) that exceeds the currently applicable PCI value, the PCI value shall be adjusted upward to equal the API value.

(h) [Reserved]

(i)(1)(i) Price cap local exchange carriers that are recovering revenues through rates pursuant to §§ 69.106, 69.108, 69.109, 69.110, 69.111, 69.112, 69.113, 69.118, 69.123, 69.124, 69.125, 69.129, or § 69.155 of this chapter shall target, to the extent necessary to reduce the ATS Charge to the Target Rate as set forth in § 61.3 (qq) for the first time, any PCI reductions associated with the dollar impact of application of the (GDP–PI—X) portion of the formula in § 61.45(b)(1)(i) to the traffic sensitive and trunking baskets. In order to calculate the actual dollars to transfer to the trunking and traffic sensitive baskets, carriers will first determine the ''Targeted Revenue Differential'' that will be transferred to the trunking and traffic sensitive baskets to reduce the ATS Charge to the Target Rate as set forth in § 61.3(qq). The Targeted Revenue Differential shall be applied only to the trunking and traffic sensitive baskets to the extent necessary to reduce the ATS charge to the Target Rate as set forth in § 61.3 (qq), and shall not be applied to reduce the PCIs in any other basket or to reduce Average Price Cap CMT Revenue per Line month, except as provided in § 61.45(i)(4).

(ii) For the purposes of § 61.45(i)(1)(i), Targeted Revenue Differential will be determined by adding together the following amounts:

(A) R * (GDP–PI – X) for the traffic sensitive basket, trunking basket, and the CMT basket excluding CCL revenues; and

(B) CCL Revenues * [(GDP–PI–X – (g/2)]/[1 + (g/2)]

Where ''g'' is defined in § 61.45(b)(1)(i).

(2) Until a tariff entity's ATS Charge equals the Target Rate as set forth in § 61.3 (qq) for the first time, the Targeted Revenue Differential will be targeted to reduce the following rates for that tariff filing entity, in order of priority:

(i) To the residual per minute Transport Interconnection Charge, until that rate is $0.00; then

(ii) To the Information Surcharge, until that rate is $0.00; then

(iii) To the other Local Switching charges and Switched Transport charges until the tariff entity's ATS Rate equals the Target Rate as set forth in § 61.3(qq) for the first time. In making these reductions, the reductions to Local Switching rates as a percentage of total X-factor reductions must be greater than or equal to the percentage proportion of Local Switching revenues to the total sum of revenues for Local Switching, Local Switching Trunk Ports, Signalling Transfer Point Port Termination, Switched Direct Trunked Transport, Signalling for Switched Direct Trunked Transport, Entrance Facilities for switched access traffic, Tandem Switched Transport, and Signalling for Tandem Switching (*i.e.*, Local Switching gets at least its proportionate share of reductions).

(3) After a price cap local exchange carrier reaches the Target Rate as set forth in § 61.3(qq), the ATS Rate will be recalculated each subsequent Annual Filing. This process will identify the new ATS Charge for the new base period level. Due to change in base period demand and inclusion of new services for that annual filing, the absolute level of a tariff entity's ATS Charge may change. The resulting new ATS Charge level will be what that tariff entity will be measured against during that base period. For example, if a

company whose target is $0.0055 reached the Target Rate during the 2000 annual filing, that level may change to $0.0058 in the 2001 annual filing due to change in demand and inclusion of new services. Therefore, it will be the $0.0058 average rate that the tariff entity will be measured against for all non-annual filings. Likewise, if that same company was at the Target Rate during the 2000 filing, that level may change to $0.0053 average rate in the 2001 annual filing due to change in demand and inclusion of new services. In that case, it will be at the $0.0053 average rate that the tariff entity will be measured.

(4) A company electing a $0.0095 Target Rate will, in the tariff year it reaches the Target Rate, apply any Targeted Revenue Differential remaining after reaching the Target Rate to reduce Average Price Cap CMT Revenue per Line month until the CCL charge is eliminated. In subsequent years, until the earlier of June 30, 2004 or when the CCL charge is eliminated, tariff filing entities with a Target Rate of $0.0095, or the portion of a filing entity consolidated pursuant to §61.48(o) that, prior to such consolidation, had a Target Rate of $0.0095, will reduce Average Price Cap CMT Revenue per Line month according to the following method:

(i) Filing entity calculates the maximum allowable carrier common line revenue, as defined in §61.46(d)(1), that would be permitted in the absence of further adjustment pursuant to this paragraph;

(ii) Filing entity identifies maximum amount of dollars available to reduce Average Price Cap CMT Revenue per Line month by the following:

(CMT revenue in a $0.0095 Area—CCL revenue in a $0.0095 Area) * (GDP–PI—X) + (CCL Revenue in a $0.0095 Area) * [(GDP–PI—X)—(g/2)]/[1+(g/2)]

(iii) The Average Price Cap CMT Revenue per Line month shall then be reduced by the lesser of the amount described in paragraph (i)(4)(i) of this section and the amount described in paragraph (i)(4)(ii) of this section, divided by base period Switched Access End User Common Line Charge lines.

[65 FR 38696, June 21, 2000; 65 FR 57741, Seot. 26, 2000]

## §61.46 Adjustments to the API.

(a) Except as provided in paragraphs (d) and (e) of this section, in connection with any price cap tariff filing proposing rate changes, the carrier must calculate an API for each affected basket pursuant to the following methodology:

$API_t = API_{t-1}[\Sigma i\ v_i\ (P_t/P_{t-1})i]$

Where:

$API_t$ = the proposed API value,

$API_{t-1}$ = the existing API value,

$P_t$ = the proposed price for rate element ''i,''

$P_{t-1}$ = the existing price for rate element ''i,'' and

$v_i$ = the current estimated revenue weight for rate element ''i,'' calculated as the ratio of the base period demand for the rate element ''i'' priced at the existing rate, to the base period demand for the entire basket of services priced at existing rates.

(b) New services subject to price cap regulation must be included in the appropriate API calculations under paragraph (a) of this section beginning at the first annual price cap tariff filing following completion of the base period in which they are introduced. This index adjustment requires that the demand for the new service during the base period must be included in determining the weights used in calculating the API.

(c) Any price cap tariff filing proposing rate restructuring shall require an adjustment to the API pursuant to the general methodology described in paragraph (a) of this section. This adjustment requires the conversion of existing rates into rates of equivalent value under the proposed structure, and then the comparison of the existing rates that have been converted to reflect restructuring to the proposed restructured rates. This calculation may require use of carrier data and estimation techniques to assign customers of the preexisting service to those services (including the new restructured service) that will remain or become available after restructuring.

(d) The maximum allowable carrier common line (CCL) revenue shall be computed pursuant to the following methodology:

CCL = CMT − EUCL − Interstate Access Universal Service Support Mechanism Per Line − PICC

Where:

CMT = Price Cap CMT Revenue as defined in § 61.3(cc).

EUCL = Maximum allowable EUCL rates established pursuant to § 69.152 of this chapter multiplied by base period lines.

Interstate Access Universal Service Support Per Line = the amount as determined by the Administrator pursuant to § 54.807 of this chapter times the number of base period lines for each customer class and zone receiving Interstate Access Universal Service support pursuant to part 54, subpart J.

PICC = Maximum allowable PICC rates established pursuant to § 69.153 of this chapter multiplied by base period lines.

(e) In no case shall a price cap local exchange carrier include data associated with services offered pursuant to contract tariff in the calculations required by this section.

[65 FR 38698, June 21, 2000; 65 FR 57741, 57742, Sept. 26, 2000]

## § 61.47 Adjustments to the SBI; pricing bands.

(a) In connection with any price cap tariff filing proposing changes in the rates of services in service categories, subcategories, or density zones, the carrier must calculate an SBI value for each affected service category, subcategory, or density zone pursuant to the following methodology:

$$SBI_t = SBI_{t-1}[\Sigma i\ v_i(P_t/P_{t-1})_i]$$

where

$SBI_t$ = the proposed SBI value,

$SBI_{t-1}$ = the existing SBI value,

$P_t$ = the proposed price for rate element ''i,''

$P_{t-1}$ = the existing price for rate element ''i,'' and

$v_i$ = the current estimated revenue weight for rate element ''i,'' calculated as the ratio of the base period demand for the rate element ''i'' priced at the existing rate, to the base period demand for the entire group of rate elements comprising the service category priced at existing rates.

(b) New services that are added to existing service categories or subcategories must be included in the appropriate SBI calculations under paragraph (a) of this section beginning at the first annual price cap tariff filing following completion of the base period in which they are introduced. This index adjustment requires that the demand for the new service during the base period must be included in determining the weights used in calculating the SBI.

(c) In the event that the introduction of a new service requires the creation of a new service category or subcategory, a new SBI must be established for that service category or subcategory beginning at the first annual price cap tariff filing following completion of the base period in which the new service is introduced. The new SBI should be initialized at a value of 100, corresponding to the service category or subcategory rates in effect the last day of the base period, and thereafter should be adjusted as provided in paragraph (a) of this section.

(d) Any price cap tariff filing proposing rate restructuring shall require an adjustment to the affected SBI pursuant to the general methodology described in paragraph (a) of this section. This adjustment requires the conversion of existing rates in the rate element group into rates of equivalent value under the proposed structure, and then the comparison of the existing rates that have been converted to reflect restructuring to the proposed restructured rates. This calculation may require use of carrier data and estimation techniques to assign customers of the preexisting service to those services (including the new restructured service) that will remain or become available after restructuring.

(e) Pricing bands shall be established each tariff year for each service category and subcategory within a basket. Each band shall limit the pricing flexibility of the service category, subcategory, as reflected in the SBI, to an annual increase of a specified percent listed in this paragraph, relative to the percentage change in the PCI for that basket, measured from the levels in effect on the last day of the preceding tariff year. For local exchanage carriers subject to price cap regulation as that term is defined in § 61.3(ee), there shall be no lower pricing band for any service category or subcategory.

(1) Five percent:

(i) Local Switching (traffic sensitive basket)

(ii) Information (traffic sensitive basket)

(iii) Database Access Services (traffic sensitive basket)

(iv) 800 Database Vertical Services subservice (traffic sensitive basket)

(v) Billing Name and Address (traffic sensitive basket)

(vi) Local Switching Trunk Ports (traffic sensitive basket)

(vii) Signalling Transfer Point Port Termination (traffic sensitive basket)

(viii) Voice Grade (trunking and special access baskets)

(ix) Audio/Video (special access basket)

(x) Total High Capacity (trunking and special access baskets)

(xi) DS1 Subservice (trunking and special access baskets)

(xii) DS3 Subservice (trunking and special access baskets)

(xiii) Wideband (special access basket)

(2) Two percent:

(i) Tandem-Switched Transport (trunking basket)

(ii) Signalling for Tandem Switching (trunking basket)

(f) A local exchange carrier subject to price cap regulation may establish density zones pursuant to the requirements set forth in §69.123 of this chapter, for any service in the trunking and special access baskets, other than the interconnection charge set forth in §69.124 of this chapter. The pricing flexibility of each zone shall be limited to an annual increase of 15 percent, relative to the percentage change in the PCI for that basket, measured from the levels in effect on the last day of the preceding tariff year. There shall be no lower pricing band for any density zone.

(g) [Reserved]

(h) [Reserved]

(i)(l) [Reserved]

(2) Effective January 1, 1998, notwithstanding the requirements of paragraph (a) of this section, if a local exchange carrier is recovering interconnection charge revenues through per-minute rates pursuant to §69.155 of this chapter, any reductions to the PCI for the basket designated in §61.42(d)(3) resulting from the application of the provisions of §61.45(b)(1)(i) and from the application of the provisions of §§61.45(i)(1) and 61.45(i)(2) shall be directed to the SBI of the service category designated in §61.42(d)(i).

(3) [Reserved]

(4) Effective January 1, 1998, the SBI reduction required by paragraph (i)(2) of this section shall be determined by dividing the sum of the dollar amount of any PCI reduction required by §§61.45(i)(1) and 61.45(i)(2), by the dollar amount associated with the SBI for the service category designated in §61.42(e)(2)(vi), and multiplying the SBI for the service category designated in §61.42(e)(2)(vi) by one minus the resulting ratio.

(5) Effective July 1, 2000, notwithstanding the requirements of paragraph (a) of this section and subject to the limitations of §61.45(i), if a local exchange carrier is recovering an ATS charge greater than its Target Rate as set forth in §61.3(qq), any reductions to the PCI for the traffic sensitive or trunking baskets designated in §§61.42(d)(2) and 61.42(d)(3) resulting from the application of the provisions of §61.45(b), and the formula in §61.45(b) and from the application of the provisions of §§61.45(i)(1), and 61.45(i)(2) shall be directed to the SBIs of the service categories designated in §§61.42(e)(1) and 61.42(e)(2).

(j) [Reserved]

(k) In no case shall a price cap local exchange carrier include data associated with services offered pursuant to contract tariff in the calculations required by this section.

[54 FR 19843, May 8, 1989, as amended at 55 FR 42384, Oct. 19, 1990; 56 FR 55239, Oct. 25, 1991; 57 FR 54331, Nov. 18, 1992; 58 FR 7868, Feb. 10, 1993; 58 FR 48762, Sept. 17, 1993; 59 FR 10302, Mar. 4, 1994; 59 FR 32930, June 27, 1994; 60 FR 19528, Apr. 19, 1995; 60 FR 52346, Oct. 6, 1995; 62 FR 4659, Jan. 31, 1997; 62 FR 31932, June 11, 1997; 62 FR 40460, July 29, 1997; 64 FR 46590, Aug. 26, 1999; 64 FR 51265, Sept. 22, 1999; 65 FR 38698, June 21, 2000; 65 FR 57742, Sept. 26, 2000]

### §61.48 Transition rules for price cap formula calculations.

(a)–(h) [Reserved]

(i) *Transport and Special Access Density Pricing Zone Transition Rules*—(1) *Definitions.* The following definitions apply for purposes of paragraph (i) of this section:

*Earlier date* is the earlier of the special access zone date and the transport zone date.

*Earlier service* is special access if the special access zone date precedes the transport zone date, and is transport if the transport zone date precedes the special access zone date.

*Later date* is the later of the special access zone date and the transport zone date.

*Later service* is transport if the special access zone date precedes the transport zone date, and is special access if the transport zone date precedes the special access zone date.

*Revenue weight* of a given group of services included in a zone category is the ratio of base period demand for the given service rate elements included in the category priced at existing rates, to the base period demand for the entire group of rate elements comprising the category priced at existing rates.

*Special access zone date* is the date on which a local exchange carrier tariff establishing divergent special access rates in different zones, as described in § 69.123(c) of this chapter, becomes effective.

*Transport zone date* is the date on which a local exchange carrier tariff establishing divergent switched transport rates in different zones, as described in § 69.123(d) of this chapter, becomes effective.

(2) *Simultaneous Introduction of Special Access and Transport Zones.* Local exchange carriers subject to price cap regulation that have established density pricing zones pursuant to § 69.123 of this chapter, and whose special access zone date and transport zone date occur on the same date, shall initially establish density pricing zone SBIs and bands pursuant to the methodology in §§ 61.47(e) through (f).

(3) *Sequential Introduction of Zones in the Same Tariff Year.* Notwithstanding §§ 61.47(e) through (f), local exchange carriers subject to price cap regulation that have established density pricing zones pursuant to § 69.123 of this chapter, and whose special access zone date and transport zone date occur on different dates during the same tariff year, shall, on the earlier date, establish density pricing zone SBIs and pricing bands using the methodology described in §§ 61.47(e) through (f), but applicable to the earlier service only. On the later date, such carriers shall recalculate the SBIs and pricing bands to limit the pricing flexibility of the services included in each density pricing zone category, as reflected in its SBI, as follows:

(i) The upper pricing band shall be a weighted average of the following:

(A) The upper pricing band that applied to the earlier services included in the zone category on the day preceding the later date, weighted by the revenue weight of the earlier services included in the zone category; and

(B) 1.05 times the SBI value for the services included in the zone category on the day preceding the later date, weighted by the revenue weight of the later services included in the zone category.

(ii) [Reserved]

(iii) On the later date, the SBI value for the zone category shall be equal to the SBI value for the category on the day preceding the later date.

(4) *Introduction of Zones in Different Tariff Years.* Notwithstanding §§ 61.47(e) through (f), those local exchange carriers subject to price cap regulation that have established density pricing zones pursuant to § 69.123 of this chapter, and whose special access zone date and transport zone date do not occur within the same tariff year, shall, on the earlier date, establish density pricing zone SBIs and pricing bands using the methodology described in §§ 61.47(e) through (f), but applicable to the earlier service only.

(i) On the later date, such carriers shall use the methodology set forth in paragraphs (a) through (d) of § 61.47 to calculate separate SBIs in each zone for each of the following groups of services:

(A) DS1 special access services;

(B) DS3 special access services;

(C) DS1 entrance facilities, DS1 direct-trunked transport, and DS1 dedicated signalling transport;

(D) DS3 entrance facilities, DS3 direct-trunked transport, and DS3 dedicated signalling transport;

(E) Voice grade entrance facilities, voice grade direct-trunked transport, and voice grade dedicated signalling transport;

(F) Tandem-switched transport; and

(G) Such other special access services as the Commission may designate by order.

(ii) From the later date through the end of the following tariff year, the annual pricing flexibility for each of the subindexes specified in paragraph (i)(4)(i) of this section shall be limited to an annual increase of five percent or an annual decrease of fifteen percent, relative to the percentage change in the PCI for the trunking basket, measured from the levels in effect on the last day of the tariff year preceding the tariff year in which the later date occurs.

(iii) On the first day of the second tariff year following the tariff year during which the later date occurs, the local exchange carriers to which this paragraph applies shall establish the separate subindexes provided in §61.47(e), and shall set the initial SBIs for those density pricing zone categories that are combined (specified in paragraphs (i)(4)(i)(A), (i)(4)(i)(B), (i)(4)(i)(C), (i)(4)(i)(D), (i)(4)(i)(E), and (i)(4)(i)(G) of this section) by computing the weighted averages of the SBIs that applied to the formerly separate zone categories, weighted by the revenue weights of the respective services included in the zone categories.

(j)–(k) [Reserved]

(l) *Average Traffic Sensitive Revenues.* (1) In the July 1, 2000 annual filing, price cap local exchange carriers will make an additional reduction to rates comprising ATS charge, and to associated SBI upper limits and PCIs. This reduction will be calculated to be the amount that would be necessary to achieve a total $2.1 billion reduction in carrier common line and ATS rates by all price cap local exchange carriers, compared with those rates as they existed on June 30, 2000 using 2000 annual filing base period demand.

(i) The net change in revenue associated with Carrier Common Line Rate elements resulting from:

(A) The removal from access of price cap local exchange carrier contributions to the Federal universal service mechanisms;

(B) Price cap local exchange carrier receipts of interstate access universal service support pursuant to subpart J of part 54;

(C) Changes in End User Common Line Charges and PICC rates;

(D) Changes in Carrier Common Line charges due to GDP–PI—X targeting for $0.0095 filing entities.

(ii) Reductions in Average Traffic Sensitive charges resulting from:

(A) Targeting of the application of the (GDP–PI—X) portion of the formula in §61.45(b), and any applicable ''g'' adjustments;

(B) The removal from access of price cap local exchange carrier contributions to the Federal universal service mechanisms;

(C) Additional ATS charge reductions defined in paragraph (2) of this section.

(2) Once the reductions in paragraph (l)(1)(i) and paragraphs (l)(1)(ii)(A) and (l)(1)(ii)(B) of this section are identified, the difference between those reductions and $2.1 billion is the total amount of additional reductions that would be made to ATS rates of price cap local exchange carriers. This amount will then be restated as the percentage of total price cap local exchange carrier Local Switching revenues as of June 30, 2000 using 2000 annual filing base period demand (''June 30 Local Switching revenues'') necessary to yield the total amount of additional reductions and taking into account the fact that, if participating, a price cap local exchange carrier would not reduce ATS rates below its Target Rate as set forth in §61.3(qq). Each price cap local exchange carrier then reduces ATS rate elements, and associated SBI upper limits and PCIs, by a dollar amount equivalent to the percentage times the June 30 Local Switching revenues for that filing entity, provided that no price cap local exchange carrier shall be required to reduce its ATS rates below its Target Rate as set forth in §61.3(qq). Each carrier can take its additional reductions against any of the ATS rate elements, provided that at least a proportional share must be taken against Local Switching rates.

(m) *Pooled Local Switching Revenues.* (1) Price cap local exchange carriers are permitted to pool local switching revenues in their CMT basket under one of the following conditions.

(i) Any price cap local exchange carrier that would otherwise have July 1, 2000 price cap reductions as a percentage of Base Period Price Cap Revenues at the holding company level greater than the industry wide total July 1, 2000 price cap revenue reduction as a percentage of Base Period Price Cap Revenues may elect temporarily to pool the amount of the additional reductions above 25% of the Local Switching element revenues necessary to yield that carrier's proportionate share of a total $2.1 billion reduction in switched access usage rates on July 1, 2000. The basis of the reduction calculation will be R at $PCI_{t-1}$ for the upcoming tariff year. The percentage reductions per line amounts will be calculated as follows: (Total Price Cap Revenue Reduction ÷ Base Period Price Cap Revenues)

Pooled local switching revenue for each filing entity within a holding company that qualifies under this paragraph (i) will continue until such pooled revenues are eliminated under this paragraph. Notwithstanding the provisions of § 61.45(b)(1), once the Average Traffic Sensitive (ATS) rate reaches the applicable Target Rate as set forth in § 61.3(qq), the Targeted Revenue Differential as defined in § 61.45(i) shall be targeted to reducing pooled local switching revenue until the pooled local switching revenue is eliminated. Thereafter, the X-factor for these baskets will be determined in accordance with § 61.45(b)(1).

(ii) Price cap local exchange carriers other than the Bell companies and GTE with at least 20% of total holding company lines operated by companies that as of December 31, 1999 were certified to the Commission as rural carriers, may elect to pool up to the following amounts:

(A) For a price cap holding company's predominantly non-rural filing entities (*i.e.,* filing entities within which more than 50% of all lines are operated by telephone companies other than those that as of December 31, 1999 were certified to the Commission as rural telephone companies), the amount of the additional reductions to Average Traffic Sensitive Charge rates as defined in paragraph (l)(2) of this section, to the extent such reductions exceed 25% of the Local Switching element revenues (measured in terms of June 30, 2000 rates times 1999 base period demand);

(B) For a price cap holding company's predominantly rural filing entities (*i.e.,* filing entities with greater than 50% of lines operated by telephone companies that as of December 31, 1999 were certified to the Commission as rural telephone companies), the amount of the additional reductions to Average Traffic Sensitive Charge rates as defined in paragraph (l)(2) of this section.

(2) Allocation of Pooled Local Switching Revenue to Certain CMT Elements

(i) The pooled local switching revenue for each filing entity is shifted to the CMT basket within price caps. Pooled local switching revenue will not be included in calculations to determine the eligibility for interstate access universal service funding.

(ii) Pooled local switching revenue will be capped on a revenue per line basis.

(iii) Pooled local switching revenue is included in the total revenue for the CMT basket in calculating the X-factor reduction targeted to the traffic sensitive rate elements, and for companies qualified under paragraph (m)(1)(i) of this section, to pooled elements after the Average Traffic Sensitive Charge reaches the target level. For the purpose of targeting X-factor reductions, companies that allocate pooled local switching revenue to other filing entities pursuant to paragraph (m)(2)(vii) of this section shall include pooled local switching revenue in the total revenue of the CMT basket of the filing entity from which the pooled local switching revenue originated.

(iv) Pooled local switching revenue shall be kept separate from CMT revenue in the CMT basket. CMT rate elements for each filing entity shall first be set based on CMT revenue per line without regard to the presence of pooled local switching revenue for each filing entity.

(v) If the rates generated without regard to the presence of pooled local switching revenue for multi-line business PICC and/or multi-line business SLC are below the nominal caps of $4.31

and $9.20, respectively, pooled amounts can be added to these rate elements to the extent permitted by the nominal caps.

(vi) Notwithstanding the provisions of §69.152(k) of this chapter, pooled local switching revenue is first added to the multi-line business SLC until the rate equals the nominal cap ($9.20) or the pooled local switching revenue is fully allocated. If pooled local switching revenue remains after applying amounts to the multi-line business SLC, notwithstanding the provisions of §69.153 of this chapter, the remaining pooled local switching revenue may be added to the multi-line business PICC until the rate equals the nominal cap ($4.31) or the pooled local switching revenue is fully allocated. Unallocated pooled local switching revenue may still remain. For companies pooling pursuant to paragraph (m)(1)(i) of this section, these unallocated amounts may not be recovered from the CCL charge, the primary residential and single-line business SLC, a non-primary residential SLC, or from CMT elements in any other filing entity.

(vii) For companies pooling pursuant to paragraph (m)(1)(ii) of this section, pooled local switching revenue that can not be allocated to the multi-line business PICC and multi-line business SLC rates within an individual filing entity may not be recovered from the CCL charge, primary residential and single-line business SLC or residential/single-line business SLC charges, but may be allocated to other filing entities within the holding company, and collected by adding these amounts to the multi-line business PICC and multi-line business SLC rates. The allocation of pooled local switching revenue among filing entities will be recalculated at each annual filing. In subsequent annual filings, pooled local switching revenue that was allocated to another filing entity will be reallocated to the filing entity from where it originated, to the full extent permitted by the nominal caps of $9.20 and $4.31.

(viii) Notwithstanding the provisions of §69.152(k) of this chapter, these unallocated local switching revenues that cannot be recovered fully pursuant to paragraph (m)(2)(vii) of this section are first added to the multi-line business SLC of other filing entities until the resulting rate equals the nominal cap ($9.20) or the pooled local switching revenue for the holding company is fully allocated. If the pooled local switching revenue can be fully allocated to the multi-line business SLC, the amount is distributed to each filing entity with a rate below the nominal cap ($9.20) based on its below-cap multi-line business SLC revenue as a percentage of the total holding company's below-cap multi-line business SLC revenue.

(ix) If pooled local switching revenue remains after applying amounts to the multi-line business SLC of all filing entities in the holding company, pooled local switching revenue may be added to the multi-line business PICC of other filing entities. Notwithstanding the provisions of §69.153 of this chapter, the remaining pooled local switching revenue is distributed to each filing entity with a rate below the nominal cap ($4.31) based on its below-cap multi-line business PICC revenue as a percentage of the total holding company's below-cap multi-line business PICC revenue.

(x) If pooled local switching revenue is added to the multi-line business SLC but not to the multi-line business PICC for a filing entity that qualified to deaverage SLCs without regard to pooled local switching revenue, the resulting SLC rates can still be deaveraged. Total pooled local switching revenue is added to the deaveraged zone 1 multi-line business SLC rate until the per line rate in zone 1 equals the rate in zone 2 or until the pooled local switching revenue is fully allocated to the deaveraged multi-line business SLC rate for zone 1. If pooled local switching revenue remains after the rate in zone 1 equals zone 2, the deaveraged rates of zone 1 and zone 2 are increased until the pooled local switching revenue is fully allocated to the deaveraged multi-line business SLC rates of zone 1 and 2 or until those rates reach the zone 3 multi-line business SLC rate level. This process continues until pooled local switching revenue is fully allocated to the zone deaveraged rates.

(n) Establishment of the special access basket, effective July 1, 2000.

(1) On the effective date, the PCI value for the special access basket, as defined in § 61.42(d)(5) shall be equal to the PCI for the trunking basket on the day preceding the establishment of the special access basket.

(2) On the effective date, the API value for the special access basket, as defined in § 61.42(d)(5) shall be equal to the API for the trunking basket on the day preceding the establishment of the special access basket.

(3) Service Category, Subcategory, and Density Zone SBIs and Upper Limits.

(i) Interconnection, Tandem Switched Transport, and Signalling Interconnec- tion will retain the SBIs and upper limits and remain in the trunking basket.

(ii) Audio/Video and Wideband will retain the SBIs and upper limits and be moved into the special access basket.

(iii) For Voice Grade, the SBIs and upper limits in both baskets will be equal to the SBIs and upper limits in the existing trunking basket on the day preceding the establishment of the special access basket. Voice Grade density zones in the trunking basket will retain their indices and upper limits. Voice Grade density zones will be initialized in the special access basket when services are first offered in them.

(iv) For High Cap/DDS, DS1, and DS3 category and subcategories, the SBIs and upper limits in both baskets will be equal to the SBIs and upper limits in the existing trunking basket on the day preceding the establishment of the special access basket. SBIs and upper limits for services that are in both combined density zones and either DTT/EF or special access density zones will be calculated by using weighted averages of the indices in the affected zones.

(v) For each DTT/EF-related zone remaining in the trunking basket, the values will be calculated by taking the sum of the products of the DTT/EF revenues times the DTT/EF index (or upper limit) and the DTT/EF-related revenues in the combined zone times the combined index (or upper limit), and dividing by the total DTT/EF-related revenues for that zone.

(vi) For each special access-related zone in the special access basket, the values will be calculated by taking the sum of the products of the special access revenues times the special access index (or upper limit) and the special access-related revenues in the combined zone times the combined index (or upper limit), and dividing by the total special access-related revenues for that zone.

(o) Treatment of acquisitions of exchanges with different ATS Target Rates as set forth in § 61.3(qq):

(1) In the event that a price cap local exchange carrier acquires a filing entity or portion thereof from a price cap local exchange carrier after July 1, 2000, and the price cap local exchange carrier did not have a binding and executed contract to purchase that filing entity or portion thereof as of April 1, 2000, those properties retain their preexisting Target Rates as set forth in § 61.3(qq). If those properties are merged into a filing entity with a different Target Rate as set forth in § 61.3(qq), the Target Rate as set forth in § 61.3(qq) for the merged filing entity will be the weighted average of the Target Rates as set forth in § 61.3(qq) for the properties being combined into a single filing entity, with the average weighted by local switching minutes. When a property acquired as a result of a contract for purchase executed after April 1, 2000 is merged with $0.0095 Target Rate properties, the obligation to apply price cap reductions to reduce CCL, pursuant to § 61.45(b)(iii) does not apply to the properties purchased under contracts executed after April 1, 2000, but continues to apply to the other properties.

(2) For sale of properties for which a holding company was, as of April 1, 2000, under a binding and executed contract to purchase but which close after June 30, 2000, but during tariff year 2000, and that are subject to the $0.0095 Target Rate as set forth in § 61.3(qq), the Average Traffic Sensitive Rate charged by the purchaser for that property will be the greater of $0.0095 or the

Average Traffic Sensitive Rate for that property.

[54 FR 19843, May 8, 1989, as amended at 55 FR 42384, Oct. 19, 1990; 56 FR 21617, May 10, 1991; 56 FR 55239, Oct. 25, 1991; 59 FR 10302, Mar. 4, 1994; 60 FR 19528, Apr. 19, 1995; 60 FR 52346, Oct. 6, 1995; 62 FR 31932, June 11, 1997; 64 FR 46590, Aug. 26, 1999; 65 FR 38699, June 21, 2000; 65 FR 57742, 57743, Sept. 26, 2000]

### §61.49 Supporting information to be submitted with letters of transmittal for tariffs of carriers subject to price cap regulation.

(a) Each price cap tariff filing must be accompanied by supporting materials sufficient to calculate required adjustments to each PCI, API, and SBI pursuant to the methodologies provided in §§61.45, 61.46, and 61.47, as applicable.

(b) Each price cap tariff filing that proposes rates that are within applicable bands established pursuant to §61.47, and that results in an API value that is equal to or less than the applicable PCI value, must be accompanied by supporting materials sufficient to establish compliance with the applicable bands, and to calculate the necessary adjustment to the affected APIs and SBIs pursuant to §§61.46 and 61.47, respectively.

(c) Each price cap tariff filing that proposes rates above the applicable band limits established in §§61.47 (e) must be accompanied by supporting materials establishing substantial cause for the proposed rates.

(d) Each price cap tariff filing that proposes rates that will result in an API value that exceeds the applicable PCI value must be accompanied by:

(1) An explanation of the manner in which all costs have been allocated among baskets; and

(2) Within the affected basket, a cost assignment slowing down to the lowest possible level of disaggregation, including a detailed explanation of the reasons for the prices of all rate elements to which costs are not assigned.

(e) Each price cap tariff filing that proposes restructuring of existing rates must be accompanied by supporting materials sufficient to make the adjustments to each affected API and SBI required by §§61.46(c) and 61.47(d), respectively.

(f)(1) [Reserved]

(2) Each tariff filing submitted by a price cap LEC that introduces a new loop-based service, as defined in §61.3(pp) of this part—including a restructured unbundled basic service element (BSE), as defined in §69.2(mm) of this chapter, that constitutes a new loop-based service—that is or will later be included in a basket, must be accompanied by cost data sufficient to establish that the new loop-based service or unbundled BSE will not recover more than a just and reasonable portion of the carrier's overhead costs.

(3) A price cap LEC may submit without cost data any tariff filings that introduce new services, other than loop-based services.

(4) A price cap LEC that has removed its corridor or interstate intraLATA toll services from its interexchange basket pursuant to §61.42(d)(4)(ii), may submit its tariff filings for corridor or interstate intraLATA toll services without cost data.

(g) Each tariff filing submitted by a local exchange carrier subject to price cap regulation that introduces a new loop-based service or a restructured unbundled basic service element (BSE), as defined in §69.2(mm) of this chapter, that is or will later be included in a basket, or that introduces or changes the rates for connection charge subelements for expanded interconnection, as defined in §69.121 of this chapter, must also be accompanied by:

(1) The following, including complete explanations of the bases for the estimates.

(i) A study containing a projection of costs for a representative 12 month period; and

(ii) Estimates of the effect of the new tariff on the traffic and revenues from the service to which the new tariff applies, the carrier's other service classifications, and the carrier's overall traffic and revenues. These estimates must include the projected effects on the traffic and revenues for the same representative 12 month period used in paragraph (g)(1)(i) of this section.

(2) *Working papers and statistical data.* (i) Concurrently with the filing of any tariff change or tariff filing for a service not previously offered, the Chief, Tariff and Pricing Analysis Branch must be provided two sets of working

papers containing the information underlying the data supplied in response to paragraph (h)(1) of this section, and a clear explanation of how the working papers relate to that information.

(ii) All statistical studies must be submitted and supported in the form prescribed in §1.363 of the Commission's rules.

(h) Each tariff filing submitted by a local exchange carrier subject to price cap regulation that introduces or changes the rates for connection charge subelements for expanded interconnection, as defined in §69.121 of this chapter, must be accompanied by cost data sufficient to establish that such charges will not recover more than a just and reasonable portion of the carrier's overhead costs.

(i) [Reserved]

(j) For a tariff that introduces a system of density pricing zones, as described in §69.123 of this chapter, the carrier must, before filing its tariff, submit a density pricing zone plan including, *inter alia*, documentation sufficient to establish that the system of zones reasonably reflects cost-related characteristics, such as the density of total interstate traffic in central offices located in the respective zones, and receive approval of its proposed plan.

(k) In accordance with §§61.41 through 61.49, local exchange carriers subject to price cap regulation that elect to file their annual access tariff pursuant to section 204(a)(3) of the Communications Act shall submit supporting material for their interstate annual access tariffs, absent rate information, 90 days prior to July 1 of each year.

(l) On each page of cost support material submitted pursuant to this section, the carrier shall indicate the transmittal number under which that page was submitted.

[54 FR 19843, May 8, 1989, as amended at 55 FR 42384, Oct. 19, 1990; 56 FR 5956, Feb. 14, 1991; 56 FR 21617, May 10, 1991; 56 FR 33880, July 24, 1991; 57 FR 37730, Aug. 20, 1992; 57 FR 54331, Nov. 18, 1992; 58 FR 17167, Apr. 1, 1993; 58 FR 38536, July 19, 1993; 58 FR 48762, Sept. 17, 1993; 59 FR 10304, Mar. 4, 1994; 62 FR 4659, Jan. 31, 1997; 62 FR 5778, Feb. 7, 1997; 62 FR 42218, Aug. 6, 1997; 64 FR 46590, 46593, Aug. 26, 1999; 64 FR 51266, Sept. 22, 1999]

**§§ 61.50–61.51 [Reserved]**

**§ 61.52 Form, size, type, legibility, etc.**

(a) All tariff publications must be in loose-leaf form of size A4 (21 cm x 29.7 cm) or 8.5 x 11 inches (21.6 cm x 27.9 cm), and must be plainly printed in black print on white paper of durable quality. Less than 6-point type may not be used. Erasures or alterations in writing must not be made in any tariff publication filed with the Commission or in those copies posted for public convenience. A margin of no less than 2.5 cm (1 inch) in width must be allowed at the left edge of every tariff publication.

(b) Pages of tariffs must be printed on one side only, and must be numbered consecutively and designated as ''Original title page,'' ''Original page 1,'' ''Original page 2,'' etc.

(1) All such pages must show, in the upper left-hand corner the name of the issuing carrier; in the upper right-hand corner the FCC number of the tariff, with the page designation directly below; in the lower left-hand corner the issued date; in the lower right-hand corner the effective date; and at the bottom, center, the street address of the issuing officer. The carrier must also specify the issuing officer's title either at the bottom center of all tariff pages, or on the title page and check sheet only.

(2) As an alternative, the issuing carrier may show in the upper left-hand corner the name of the issuing carrier, the title and street address of the issuing officer, and the issued date; and in the upper right-hand corner the FCC number of the tariff, with the page designation directly below, and the effective date. The carrier must specify the issuing officer's title in the upper left-hand corner of either all tariff pages, or on the title page and check sheet only. A carrier electing to place the information at the top of the page should annotate the bottom of each page to indicate the end of the material, e.g., a line, or the term ''Printed in USA,'' or ''End''.

(3) Only one format may be employed in a tariff publication.

(c) Incumbent local exchange carriers shall file all tariff publications and associated documents, such as transmittal letters, requests for special permission, and supporting information, electronically in accordance with the requirements set forth in §61.13 through §61.17.

[49 FR 40869, Oct. 18, 1984, as amended at 58 FR 44906, Aug. 25, 1993; 62 FR 5778, Feb. 7, 1997; 63 FR 35541, June 30, 1998]

### §61.54 Composition of tariffs.

(a) Tariffs must contain in consecutive order: A title page; check sheet; table of contents; list of concurring, connecting, and other participating carriers; explanation of symbols and abbreviations; application of tariff; general rules (including definitions), regulations, exceptions and conditions; and rates. If the issuing carrier elects to add a section assisting in the use of the tariff, it should be placed immediately after the table of contents.

(b) The title page of every tariff and supplement must show:

(1) *FCC number, indication of cancellations.* In the upper right-hand corner, the designation of the tariff or supplement as ''FCC No. ————,'' or ''Supplement No. ———— to FCC No. ————,'' and immediately below, the FCC number or numbers of tariffs or supplements cancelled thereby.

(2) *Name of carrier, class of service, geographical application, means of transmission.* The exact name of the carrier, and such other information as may be necessary to identify the carrier issuing the tariff publication; a brief statement showing each class of service provided; the geographical application; and the type of facilities used to provide service.

(3) *Expiration date.* Subject to §61.59, when the entire tariff or supplement is to expire with a fixed date, the expiration date must be shown in connection with the effective date in the following manner. Changes in expiration date must be made pursuant to the notice requirements of §61.58, unless otherwise authorized by the Commission.

Expires at the end of (date) unless sooner canceled, changed, or extended.

(4) *Title and address of issuing officer.* The title and street address of the officer issuing the tariff or supplement in the format specified in §61.52.

(5) *Revised title page.* When a revised title page is issued, the following notation must be shown in connection with its effective date:

Original tariff effective ———————— (here show the effective date of the original tariff).

(c)(1)(i) The page immediately following the title page must be designated as ''Original page 1'' and captioned ''Check Sheet.'' When the original tariff is filed, the check sheet must show the number of pages contained in the tariff. For example, ''Page 1 to 150, inclusive, of this tariff are effective as of the date shown.'' When new pages are added, they must be numbered in continuing sequence, and designated as ''Original page ———— .'' For example, when the original tariff filed has 150 pages, the first page added after page 150 is to be designated as ''Original page 151,'' and the foregoing notation must be revised to include the added pages.

(ii) Alternatively, the carrier is permitted to number its tariff pages, other than the check sheet, to reflect the section number of the tariff as well as the page. For example, under this system, pages in section 1 of the tariff would be numbered 1–1, 1–2, etc., and pages in section 2 of the tariff would be numbered 2–1, 2–2, etc. Issuing carriers shall utilize only one page numbering system throughout its tariff.

(2) If pages are to be inserted between numbered pages, each such page must be designated as an original page and must bear the number of the immediately preceding page followed by an alpha or numeric suffix. For example, when two new pages are to be inserted between pages 44 and 45 of the tariff, the first inserted page must be designated as Original page 44A or 44.1 and the second inserted page as Original page 44B or 44.2. Issuing carriers may not utilize both the alpha and numeric systems in the same publication.

(3)(i) When pages are revised, when new pages (including pages with letter or numeric suffix as set forth above) are added to the tariff, or when supplements are issued, the check sheet must be revised accordingly. Revised check sheets must indicate with an asterisk

the specific pages added or revised. In addition to the notation in (1), the check sheet must list, under the heading ''The original and revised pages named below (and Supplement No. ———) contain all changes from the original tariff that are in effect on the date shown,'' all original pages in numerical order that have been added to the tariff and the pages which have been revised, including the revision number. For example:

| Page | Number of revision except as indicated |
|---|---|
| Title | 1st |
| 1 | *8th |
| 3 | 5th |
| 5A | *Orig. |
| 10 | *8th |
| 151 | Orig. |

*New or Revised page.

(ii) On each page, the carrier shall indicate the transmittal number under which that page was submitted.

(4) Changes in, and additions to tariffs must be made by reprinting the page upon which a change or addition is made. Such changed page is to be designated as a revised page, cancelling the page which it amends. For example, ''First revised page 1 cancels original page 1,'' or ''Second revised page 2 cancels first revised page 2,'' etc. When a revised page omits rates or regulations previously published on the page which it cancels, but such rates or regulations are published on another page, the revised page must make specific reference to the page on which the rates or regulations will be found. This reference must be accomplished by inserting a sentence at the bottom of the revised page that states ''Certain rates (or regulations) previously found on this page can now be found on page ———.'' In addition, the page on which the omitted material now appears must bear the appropriate symbol opposite such material, and make specific reference to the page from which the rates or regulations were transferred. This reference must be accomplished by inserting a sentence at the bottom of the other page that states ''Certain rates (or regulations) on this page formerly appeared on page ———.''

(5) Rejected pages must be treated as indicated in § 61.69.

(d) *Table of contents.* The table of contents must contain a full and complete statement showing the exact location and specifying the page or section and page numbers, where information by subjects under general headings will be found. If a tariff contains so small a volume of matter that its title page or its interior arrangement plainly discloses its contents, the table of contents may be omitted.

(e) *Tariff User's guide.* At its option, a carrier may include a section explaining how to use the tariff.

(f) *List of concurring carriers.* This list must contain the exact name or names of carriers concurring in the tariff, alphabetically arranged, and the name of the city or town in which the principal office of every such carrier is located. If there are no concurring carriers, then the statement ''no concurring carriers'' must be made at the place where the names of the concurring carriers would otherwise appear. If the concurring carriers are numerous, their names may be stated in alphabetical order in a separate tariff filed with the Commission by the issuing carrier. Specific reference to such separate tariff by FCC number must be made in the tariff at the place where such names would otherwise appear.

(g) *List of connecting carriers.* This list must contain the exact name or names of connecting carriers, alphabetically arranged, for which rates or regulations are published in the tariff, and the name of the city or town in which the principal office of every such carrier is located. If there are no connecting carriers, then the statement ''no connecting carriers'' must be made at the place where their names would otherwise appear. If connecting carriers are numerous, their names may be stated in alphabetical order in a separate tariff filed with the Commission by the issuing carrier. Specific reference to such separate tariff by FCC number must be made in the tariff at the place where such names would otherwise appear.

(h) *List of other participating carriers.* This list must contain the exact name of every other carrier subject to the Act engaging or participating in the

communication service to which the tariff or supplement applies, together with the name of the city or town in which the principal office of such carrier is located. If there is no such other carrier, then the statement ''no participating carriers'' must be made at the place where the names of such other carriers would otherwise appear. If such other carriers are numerous, their names may be stated in alphabetical order in a separate tariff filed with the Commission by the issuing carrier. Specific reference must be made in the tariff at the place where such names would otherwise appear. The names of concurring and connecting carriers properly listed in a tariff published by any other participating carrier need not be repeated in this list.

(i)(1) *Symbols, reference marks, abbreviations.* The tariff must contain an explanation of symbols, reference marks, and abbreviations of technical terms used. The following symbols used in tariffs are reserved for the purposes indicated below:

R to signify reduction.
I to signify increase.
C to signify changed regulation.
T to signify a change in text but no change in rate or regulation.
S to signify reissued matter.
M to signify matter relocated without change.
N to signify new rate or regulation.
D to signify discontinued rate or regulation.
Z to signify a correction.

(2) The uniform symbols must be used as follows.

(i) When a change of the same character is made in all or in substantially all matter in a tariff, it may be indicated at the top of the title page of the tariff or at the top of each affected page, in the following manner: ''All rates in this tariff are increases,'' or, ''All rates on this page are reductions, except as otherwise indicated.''

(ii) When a change of the same character is made in all or substantially all matters on a page or supplement, it may be indiated at the top of the page or supplement in the following manner: All rates on this page (or supplement) are increases,'' or, ''All rates on this page (or supplement) are reductions except as otherwise indicated.''

(3) Items which have not been in effect 30 days when brought forward on revised pages must be shown as reissued, in the manner prescribed in §61.54(i)(1). The number and original effective date of the tariff publication in which the matter was originally published must be associated with the reissued matter. Items which have been in effect 30 days or more and are brought forward without change on revised pages must not be shown as reissued items.

(j) *Rates and general rules, regulations, exceptions and conditions.* The general rules (including definitions), regulations, exceptions, and conditions which govern the tariff must be stated clearly and definitely. All general rules, regulations, exceptions or conditions which in any way affect the rates named in the tariff must be specified. A special rule, regulation, exception or condition affecting a particular item or rate must be specifically referred to in connection with such item or rate. Rates must be expressed in United States currency, per chargeable unit of service for all communication services, together with a list of all points of service to and from which the rates apply. They must be arranged in a simple and systematic manner. Complicated or ambiguous terminology may not be used, and no rate, rule, regulation, exception or condition shall be included which in any way attempts to substitute a rate, rule, regulation, exception or condition named in any other tariff.

[49 FR 40869, Oct. 18, 1984, as amended at 64 FR 46591, Aug. 26, 1999]

### §61.55 Contract-based tariffs.

(a) This section shall apply to price cap LECs permitted to offer contract-based tariffs under §69.727(a) of this chapter.

(b) Composition of contract-based tariffs shall comply with §§61.54(b) through (i).

(c) Contract-based tariffs shall include the following:

(1) The term of contract, including any renewal options;

(2) A brief description of each of the services provided under the contract;

(3) Minimum volume commitments for each service;

(4) The contract price for each service or services at the volume levels committed to by the customers;

(5) A general description of any volume discounts built into the contract rate structure; and

(6) A general description of other classifications, practices, and regulations affecting the contract rate.

[64 FR 51266, Sept. 22, 1999]

### § 61.58 Notice requirements.

(a) Every proposed tariff filing must bear an effective date and, except as otherwise provided by regulation, special permission, or Commission order, must be made on at least the number of days notice specified in this section.

(1) Notice is accomplished by filing the proposed tariff changes with the Commission. Any period of notice specified in this section begins on and includes the date the tariff is received by the Commission, but does not include the effective date. If a tariff filing proposes changes governed by more than one of the notice periods listed below, the longest notice period will apply. In computing the notice period required, all days including Sundays and holidays must be counted.

(2)(i) Local exchange carriers may file tariffs pursuant to the streamlined tariff filing provisions of section 204(a)(3) of the Communications Act. Such a tariff may be filed on 7 days' notice if it proposes only rate decreases. Any other tariff filed pursuant to section 204(a)(3) of the Communications Act, including those that propose a rate increase or any change in terms and conditions, shall be filed on 15 days' notice. Any tariff filing made pursuant to section 204(a)(3) of the Communications Act must comply with the applicable cost support requirements specified in this part.

(ii) Local exchange carriers may elect not to file tariffs pursuant to section 204(a)(3) of the Communications Act. Any such tariffs shall be filed on at least 16 days' notice.

(iii) Except for tariffs filed pursuant to section 204(a)(3) of the Communications Act, the Chief, Common Carrier Bureau, may require the deferral of the effective date of any filing made on less than 120 days' notice, so as to provide for a maximum of 120 days' notice, or of such other maximum period of notice permitted by section 203(b) of the Communications Act, regardless of whether petitions under § 1.773 of this chapter have been filed.

(3) Tariff filings proposing corrections or voluntarily deferring the effective date of a pending tariff revision must be made on at least 3 days' notice, and may be filed notwithstanding the provisions of § 61.59. Corrections to tariff materials not yet effective cannot take effect before the effective date of the original material. Deferrals must take effect on or before the current effective date of the pending tariff revisions being deferred.

(4) This subsection applies only to dominant carriers. If the tariff publication would increase any rate or charge, or would effectuate and authorized discountinuance, reduction or other impairment of service to any customer, the offering carrier must inform the affected customers of the content of the tariff publication. Such notification should be made in a form appropriate to the circumstance, and may include written notification, personal contact, or advertising in newspapers of general circulation.

(b) Tariffs for new services filed by price cap local exchange carriers shall be filed on at least one day's notice.

(c) Contract-based tariffs filed by price cap local exchange carriers pursuant to § 69.727(a) of this chapter shall be filed on at least one day's notice.

(d)(1) A local exchange carrier that is filing a tariff revision to remove its corridor or interstate intraLATA toll services from its interexchange basket pursuant to § 61.42(d)(4)(ii) shall submit such filing on at least fifteen days' notice.

(2) A local exchange carrier that has removed its corridor and interstate intraLATA toll services from its interexchange basket pursuant to § 61.42(d)(4)(ii) shall file subsequent tariff filings for corridor or interstate intraLATA toll services on at least one day's notice.

(e) *Non-price cap carriers and/or services.* (1) Tariff filings in the instances specified in paragraphs (d)(1) (i), (ii), and (iii) of this section must be made on at least 15 days' notice.

(i) Tariffs filed in the first instance by new carriers.

(ii) Tariffs filings involving new rates and regulations not previously filed at, from, to or via points on new lines; at, from to or via new radio facilities; or for new points of radio communication.

(iii) Tariff filings involving a change in the name of a carrier, a change in Vertical or Horizontal coordinates (or other means used to determine airline mileages), a change in the lists of mileages, a change in the lists of connecting, concurring or other participating carriers, text changes, or the imposition of termination charges calculated from effective tariff provisions. The imposition of termination charges does not include the initial filing of termination liability provisions.

(2) Tariff filings involving a change in rate structure, a new offering, or a rate increase must be made on at least 45 days' notice.

(3) Alascom, Inc. shall file its annual tariff revisions for its Common Carrier Services (Alascom Tariff F.C.C No. 11) on at least 35 days' notice.

(4) All tariff filings not specifically assigned a different period of public notice in this part must be made on at least 35 days' notice.

(f) [Reserved]

[49 FR 40869, Oct. 18, 1984, as amended at 54 FR 19844, May 8, 1989; 55 FR 42384, Oct. 19, 1990; 56 FR 1500, Jan. 15, 1991; 56 FR 5956, Feb. 14, 1991; 56 FR 55239, Oct. 25, 1991; 58 FR 36149, July 6, 1993; 59 FR 10304, Mar. 4, 1994; 62 FR 5778, Feb. 7, 1997; 64 FR 46591, Aug. 26, 1999; 64 FR 51266, Sept. 22, 1999]

### §61.59 Effective period required before changes.

(a) Except as provided in §61.58(a)(3) or except as otherwise authorized by the Commission, new rates or regulations must be effective for at least 30 days before a dominant carrier will be permitted to make any change.

(b) Changes to rates and regulations that have not yet become effective, *i.e.*, are pending, may not be made unless the effective date of the proposed changes is at least 30 days after the scheduled effective date of the pending revisions.

(c) Changes to rates and regulations that have taken effect but have not been in effect for at least 30 days may not be made unless the scheduled effective date of the proposed changes is at least 30 days after the effective date of the existing regulations.

[64 FR 46592, Aug. 26, 1999]

## Subpart F—Specific Rules for Tariff Publications of Dominant and Nondominant Carriers

### §61.66 Scope.

The rules in this subpart apply to all carriers, unless otherwise noted.

[64 FR 46592, Aug. 26, 1999]

### §61.68 Special notations.

(a) A tariff filing must contain a statement of the authority for any matter to be filed on less than the notice required in §61.58. The following must be used:

Issued on not less than — days' notice under authority of — (specific reference to the special permission, decision, order or section of these rules).

If all the matter in a tariff publication is to become effective on less than the notice required in §61.58, specific reference to the Commission authority must be shown on the title page. If only a part of the tariff publication is to become effective on less than the notice required in §61.58, reference to the Commission authority must appear on the same page(s), and be associated with the pertinent matter.

(b) When a portion of any tariff publication is issued in order to comply with the Commission order, the following notation must be associated with that portion of the tariff publication:

In compliance with the order of the Federal Communications Commission in — (a specific citation to the applicable order should be made).

### §61.69 Rejection.

When a tariff publication is rejected by the Commission, its number may not be used again. This includes, but is not limited to, such publications as tariff numbers or specific page revision numbers. The rejected tariff publication may not be referred to as either cancelled or revised. Within five business days of the release date of the

Commission's Order rejecting such tariff publication, the issuing carrier shall file tariff revisions removing the rejected material, unless the Commission's Order establishes a different date for this filing. The publication that is subsequently issued in lieu of the rejected tariff publication must bear the notation:

In lieu of , rejected by the Federal Communications Commission.

[64 FR 46592, Aug. 26, 1999]

### § 61.72 Public information requirements.

(a) Issuing carriers must make available accurate and timely information pertaining to rates and regulations subject to tariff filing requirements.

(b) Issuing carriers must, at a minimum, provide a telephone number for public inquiries about information contained in its tariffs. This telephone number should be made readily available to all interested parties.

(c) Any issuing carrier that is an incumbent local exchange carrier, and chooses to establish an Internet web site, must make its tariffs available on that web site, in addition to the Commission's web site.

[64 FR 46592, Aug. 26, 1999]

### § 61.73 Duplication of rates or regulations.

A carrier concurring in schedules of another carrier must not publish conflicting or duplicative rates or regulations.

### § 61.74 References to other instruments.

(a) Except as otherwise provided in this and other sections of this part, no tariff publication filed with the Commission may make reference to any other tariff publication or to any other document or instrument.

(b) Tariffs for end-on-end through services may reference the tariffs of other carriers participating in the offering.

(c) Tariffs may reference concurrences for the purpose of starting where rates or regulations applicable to a service not governed by the tariff may be found.

(d) A tariff for international services offered by a carrier that is subject to detariffing for domestic, interstate, interexchange services, may reference other documents or instruments concerning the carrier's detariffed domestic, interstate, interexchange service offerings. A tariff for international services may contain such a reference if, and only if, it is necessary to incorporate information regarding the carrier's detariffed domestic, interstate, interexchange services in order to calculate discounts and minimum revenue requirements for international services provided in combination with detariffed domestic, interstate, interexchange services. Notwithstanding any such reference to documents or instruments concerning the carrier's detariffed domestic, interstate, interexchange service offerings, a tariff for international services shall specify rates, terms and conditions for the international service.

(e) Tariffs may reference other FCC tariffs that are in effect and on file with the Commission for purposes of determining mileage, or specifying the operating centers at which a specific service is available.

(f) Tariffs may reference technical publications which describe the engineering, specifications, or other technical aspects of a service offering, provided the following conditions are satisfied:

(1) The tariff must contain a general description of the service offering, including basic parameters and structural elements of the offering;

(2) The technical publication includes no rates, regulatory terms, or conditions which are required to be contained in the tariff, and any revisions to the technical publication do not affect rates, regulatory terms, or conditions included in the tariff, and do not change the basic nature of the offering;

(3) The tariff indicates where the technical publication can be obtained;

(4) The referenced technical publication is publicly available before the tariff is scheduled to take effect; and

(5) The issuing carrier regularly revises its tariff to refer to the current

edition of the referenced technical publication.

[49 FR 40869, Oct. 18, 1984, as amended at 61 FR 59366, Nov. 22, 1996; 64 FR 46592, Aug. 26, 1999]

### §61.83 Consecutive numbering.

Carriers should file tariff publications under consecutive FCC numbers. If this cannot be done, a memorandum containing an explanation of the missing number or numbers must be submitted. Supplements to a tariff must be numbered consecutively in a separate series.

[49 FR 40869, Oct. 18, 1984. Redesignated at 64 FR 46591, Aug. 26, 1999]

### §61.86 Supplements.

A carrier may not file a supplement except to suspend or cancel a tariff publication, or to defer the effective date of pending tariff revisions. A carrier may file a supplement for the voluntary deferral of a tariff publication.

[64 FR 46591, Aug. 26, 1999]

### §61.87 Cancellation of tariffs.

(a) A carrier may cancel an entire tariff. Cancellation of a tariff automatically cancels every page and supplement to that tariff except for the canceling Title Page or first page.

(1) If the existing service(s) will be provided under another carrier's tariff, then

(i) The carrier whose tariff is being canceled must revise the Title Page or the first page of its tariff indicating that the tariff is no longer effective, or

(ii) The carrier under whose tariff the service(s) will be provided must revise the Title Page or first page of the tariff to be canceled, using the name and numbering shown in the heading of the tariff to be canceled, indicating that the tariff is no longer effective. This carrier must also file with the Commission the new tariff provisions reflecting the service(s) being canceled. Both filings must be effective on the same date and may be filed under the same transmittal.

(2) If a carrier canceling its tariff intends to cease to provide existing service, then it must revise the Title Page or first page of its tariff indicating that the tariff is no longer effective.

(3) A carrier canceling its tariff, as described in this section, must comply with §61.22 or §§61.54(b)(1) and 61.54(b)(5), as applicable.

(b) When a carrier cancels a tariff as described in this section, the canceling Title Page or the first page of the canceled tariff must show where all rates and regulations will be found except for paragraph (c) of this section. The Title Page or first page of the new tariff must indicate the name of the carrier and tariff number where the canceled material had been found.

(c) When a carrier ceases to provide service(s) without a successor, it must cancel its tariff pursuant to the notice requirements of §61.23 or §61.58, as applicable, unless otherwise authorized by the Commission.

[64 FR 46591, Aug. 26, 1999]

## Subpart G—Concurrences

### §61.131 Scope.

Sections 61.132 through 61.136 apply to a carrier which must file concurrences reflecting rates and regulations for through service provided in conjunction with other carriers and to a carrier which has chosen, as an alternative to publishing its own tariff, to arrange concurrence in an effective tariff of another carrier. Limited or partial concurrences will not be permitted.

### §61.132 Method of filing concurrences.

A carrier proposing to concur in another carrier's effective tariff must deliver two copies of the concurrence to the issuing carrier in whose favor the concurrence is issued. The concurrence must be signed by an officer or agent of the carrier executing the concurrence, and must be numbered consecutively in a separate series from its FCC tariff numbers. At the same time the issuing carrier revises its tariff to reflect such a concurrence, it must submit both copies of the concurrence to the Commission. The concurrence must bear the same effective date as the date of the tariff filing reflecting the concurrence. Nondominant issuing carriers shall file revisions reflecting concurrences in their tariffs on the notice period specified in §61.23 of this part.

Dominant issuing carriers shall file concurrences in their tariffs on the notice periods specified in § 61.58(a)(2) or § 61.58(e)(1)(iii) of this part.

[49 FR 40869, Oct. 18, 1984, as amended at 64 FR 46592, Aug. 26, 1999]

### § 61.133 Format of concurrences.

(a) Concurrences must be issued in the following format:

CONCURRENCE

F.C.C. Concurrence No. ———
(Cancels F.C.C. Concurrence No. ——
(Name of Carrier ————)
(Post Office Address ————)
(Date) ————— 19—.
Secretary,
*Federal Communications Commission, Washington, D.C. 20554.*
This is to report that (name of concurring carrier) assents to and concurs in the tariffs described below. (Name of concurring carrier) thus makes itself a party to these tariffs and obligates itself (and its connecting carriers) to observe every provision in them, until a notice of revocation is filed with the Commission and delivered to the issuing carrier.
This concurrence applies to interstate (and foreign) communication:
1. Between the different points on the concurring carrier's own system;
2. Between all points on the concurring carrier's system and the systems of its connecting carriers; and
3. Between all points on the system of the concurring carrier and the systems of its connecting carriers on the one hand, and, on the other hand, all points on the system of the carrier issuing the tariff or tariffs listed below and the systems of its connecting carriers and other carriers with which through routes have been established.

(NOTE: Any of the above numbered paragraphs may be omitted or the wording modified to state the points to which the concurrence applies.)

TARIFF

(Here describe the tariff or tariffs concurred in by the carrier, specifying FCC number, title, date of issuance, and date effective. Example: A.B.C. Communications Company, Tariff FCC No. 1, Interstate Telegraph Message Service, Issued January 1, 1983, Effective April 1, 1983).
Cancels FCC Concurrence No. ——, effective ——, 19—.

(Name of concurring carrier)
By
(Title)

(b) No material is to be included in a concurrence other than that indicated in the above-prescribed form, unless specially authorized by the Commission. A concurrence in any tariff so described will be deemed to include all amendments and successive issues which the issuing carrier may make and file. All such amendments and successive issues will be binding between customers and carriers. Between carriers themselves, however, the filing by the issuing carrier of an amendment or successive issue with the Commission must not imply or be construed to imply an agreement to the filing by concurring carriers. Such filings do not affect the contractual rights or remedies of any concurring carrier(s) which have not, by contract or otherwise, specifically consented in advance to such amendment or successive issue.

### § 61.134 Concurrences for through services.

A carrier filing rates or regulations for through services between points on its own system and points on another carrier's system (or systems), or between points on another carrier's system (or systems), must list all concurring, connecting or other participating carriers as provided in § 61.54 (f), (g) and (h). A concurring carrier must tender a properly executed instrument of concurrence to the issuing carrier. If rates and regulations of the other carriers engaging in the through service(s) are not specified in the issuing carrier's tariff, that tariff must state where the other carrier's rates and regulations can be found. Such reference(s) must contain the FCC number(s) of the referenced tariff publication(s), the exact name(s) of the carrier(s) issuing such tariff publication(s), and must clearly state how the rates and regulations in the separate publications apply.

### § 61.135 Concurrences for other purposes.

When an issuing carrier permits another carrier to concur in its tariff, the issuing carrier's tariff must state the concurring carrier's rates and points of service.

### §61.136 Revocation of concurrences.

A concurrence may be revoked by a revocation notice or cancelled by a new concurrence. A revocation notice or a new concurrence, if less broad in scope than the concurrence it cancels, must bear an effective date not less than 45 days after its receipt by the Commission. A revocation notice is not given a serial number, but must specify the number of the concurrence to be revoked and the name of the carrier in whose favor the concurrence was issued. It must be in the following format:

REVOCATION NOTICE

(Name of carrier ————)
(Post office address ————)
(Date) ————, 19—.
Secretary,
*Federal Communications Commission, Washington, D.C. 20554.*

Effective ——, 19— FCC Concurrence No. —, issued by (Name of concurring carrier) in favor of (Name of issuing carrier) is hereby cancelled and revoked. Rates and regulations of (Name of concurring carrier) and its connecting carriers will thereafter be found in Tariff FCC No. — issued by —— (If the concurring carrier has ceased operations, the revocation notice must so indicate.)

(Name of carrier)
By
(Title)

## Subpart H—Applications for Special Permission

### §61.151 Scope.

Sections 61.152 and 61.153 set forth the procedures to be followed by a carrier applying for a waiver of any of the rules in this part.

[55 FR 19173, May 8, 1990]

### §61.152 Terms of applications and grants.

Applications for special permission must contain:

(a) A detailed description of the tariff publication proposed to be put into effect;

(b) A statement citing the specific rules and the grounds on which waiver is sought;

(c) A showing of good cause; and

(d) A statement as to the date and method of filing the original of the application for special permission as required by §61.153(b) and the date and method of filing the copies required by §61.153 (a) and (c).

If approved, the carrier must comply with all terms and use all authority specified in the grant. If a carrier elects to use less than the authority granted, it must apply to the Commission for modification of the original grant. If a carrier elects not to use the authority granted within sixty days of its effective date, the original grant will be automatically cancelled by the Commission.

[55 FR 19173, May 8, 1990]

### §61.153 Method of filing applications.

(a) An application for special permission must be addressed to ''Secretary, Federal Communication Commission, Washington, DC 20554.'' The date on which the application is received by the Secretary of the Commission (or the Mail Room where submitted by mail) is considered the official filing date.

(b) In addition, except for issuing carriers filing tariffing fees electronically, for all special permission applications requiring fees as set forth in part 1, subpart G of this chapter, the issuing carrier must submit the original of the application letter (without attachments), FCC Form 159, and the appropriate fee to the Mellon Bank, Pittsburgh, PA at the address set forth in §1.1105 of this chapter. Issuing carriers submitting tariffing fees electronically should submit the Form 159 and the original cover letter to the Secretary of the Commission in lieu of the Mellon Bank. The Form 159 should display the Electronic Audit Code in the box in the upper left hand corner marked ''reserved.'' Issuing carriers should submit these fee materials on the same date as the submission in paragraph (a) of this section.

(c) In addition to the requirements set forth in paragraphs (a) and (b) of this section, the issuing carrier must send a copy of the application letter with all attachments to the Secretary, Federal Communications Commission and a separate copy with all attachments to the Chief, Tariff and Pricing Analysis Branch. If a carrier applies for

special permission to revise joint tariffs, the application must state that it is filed on behalf of all carriers participating in the affected service. Applications must be numbered consecutively in a series separate from FCC tariff numbers, bear the signature of the officer or agent of the carrier, and be in the following format:

Application No.

(Date)

Secretary
Federal Communications Commission
Washington, DC 20554.

Attention: Common Carrier Bureau (here provide the statements required by § 61.152).

(Exact name of carrier)

(Name of officer or agent)

(Title of officer or agent)

[55 FR 19173, May 8, 1990, as amended at 64 FR 46592, 46593, Aug. 26, 1999]

## Subpart I—Adoption of Tariffs and Other Documents of Predecessor Carriers

### § 61.171 Adoption notice.

When a carrier's name is changed, or its operating control transferred from one carrier to another in whole or in part, the successor carrier must file tariff revisions to reflect the name change. The successor carrier may either immediately reissue the entire tariff in its own name, or immediately file an adoption notice. Within 35 days of filing an adoption notice, the successor must reissue the entire tariff in its own name. The reissued tariff must be numbered in the series of the successor carrier, and must contain all original pages without changes in regulations or rates. The transmittal letter must state the tariff is being filed to show a change in the carrier's name pursuant to § 61.171 of the Commission's Rules. The adoption notice, if used, must read as follows:

The (Exact name of successor carrier or receiver) here adopts, ratifies and makes its own in every respect, all applicable tariffs and amendments filed with the Federal Communications Commission by (predecessor) prior to (date).

### § 61.172 Changes to be incorporated in tariffs of successor carrier.

When only a portion of properties is transferred to a successor carrier, that carrier must incorporate in its tariff the rates applying locally between points on the transferred portion. Moreover, the predecessor carrier must simultaneously cancel the corresponding rates from its tariffs, and reference the FCC number of the successor carrier's tariff containing the rates that will thereafter apply.

## Subpart J—Suspensions

### § 61.191 Carrier to file supplement when notified of suspension.

If a carrier is notified by the Commission that its tariff publication has been suspended, the carrier must file, within five business days from the release date of the suspension order, a consecutively numbered supplement without an effective date, which specifies the schedules which have been suspended.

[64 FR 46593, Aug. 26, 1999]

### § 61.192 Contents of supplement announcing suspension.

(a) A supplement announcing a suspension by the Commission must specify the term of suspension imposed by the Commission.

(b) A supplement announcing a suspension of either an entire tariff or a part of a tariff publication, must specify the applicable tariff publication effective during the period of suspension.

### § 61.193 Vacation of suspension order; supplements announcing same; etc.

If the Commission vacates a suspension order, the affected carrier must issue a supplement or revised page stating the Commission's action as well as the lawful schedules.

# PART 63—EXTENSION OF LINES, NEW LINES, AND DISCONTINUANCE, REDUCTION, OUTAGE AND IMPAIRMENT OF SERVICE BY COMMON CARRIERS; AND GRANTS OF RECOGNIZED PRIVATE OPERATING AGENCY STATUS

EXTENSIONS AND SUPPLEMENTS

Sec.
63.01 Authority for all domestic common carriers.
63.02 Exemptions for extensions of lines and for systems for the delivery of video programming.
63.09 Definitions applicable to international Section 214 authorizations.
63.10 Regulatory classification of U.S. international carriers.
63.11 Notification by and prior approval for U.S. international carriers that are or propose to become affiliated with a foreign carrier.
63.12 Processing of international Section 214 applications.
63.13 Procedures for modifying regulatory classification of U.S. international carriers from dominant to non-dominant.
63.14 Prohibition on agreeing to accept special concessions.
63.16 Switched services over private lines.
63.17 Special provisions for U.S. international common carriers.
63.18 Contents of applications for international common carriers.
63.19 Special procedures for discontinuances of international services.
63.20 Copies required; fees; and filing periods for international service providers.
63.21 Conditions applicable to all international Section 214 authorizations.
63.22 Facilities-based international common carriers.
63.23 Resale-based international common carriers.
63.24 Pro forma assignments and transfers of control.
63.25 Special provisions relating to temporary or emergency service by international carriers.

GENERAL PROVISIONS RELATING TO ALL APPLICATIONS UNDER SECTION 214

63.50 Amendment of applications.
63.51 Additional information.
63.52 Copies required; fees; and filing periods.
63.53 Form.

DISCONTINUANCE, REDUCTION, OUTAGE AND IMPAIRMENT

63.60 Definitions.
63.61 Applicability.
63.62 Type of discontinuance, reduction, or impairment of telephone or telegraph service requiring formal application.
63.63 Emergency discontinuance, reduction, or impairment of service.
63.65 Closure of public toll station where another toll station of applicant in the community will continue service.
63.66 Closure of or reduction of hours of service at telephone exchanges at military establishments.
63.71 Procedures for discontinuance, reduction or impairment of service by domestic carriers.
63.90 Publication and posting of notices.
63.100 Notification of service outage.

CONTENTS OF APPLICATIONS; EXAMPLES

63.500 Contents of applications to dismantle or remove a trunk line.
63.501 Contents of applications to sever physical connection or to terminate or suspend interchange of traffic with another carrier.
63.504 Contents of applications to close a public toll station where no other such toll station of the applicant in the community will continue service and where telephone toll service is not otherwise available to the public through a telephone exchange connected with the toll lines of a carrier.
63.505 Contents of applications for any type of discontinuance, reduction, or impairment of telephone service not specifically provided for in this part.
63.601 Contents of applications for authority to reduce the hours of service of public coast stations under the conditions specified in §63.70.

REQUEST FOR DESIGNATION AS A RECOGNIZED PRIVATE OPERATING AGENCY

63.701 Contents of application.
63.702 Form.

AUTHORITY: Sections 1, 4(i), 4(j), 10, 11, 201–205, 214, 218, 403 and 651 of the Communications Act of 1934, as amended, 47 U.S.C. 151, 154(i), 154(j), 160, 201–205, 214, 218, 403, and 571, unless otherwise noted.

SOURCE: 28 FR 13229, Dec. 5, 1963, unless otherwise noted.

EXTENSIONS AND SUPPLEMENTS

## §63.01 Authority for all domestic common carriers.

(a) Any party that would be a domestic interstate communications common carrier is authorized to provide domestic, interstate services to any domestic point and to construct, acquire, or operate any domestic transmission

line as long as it obtains all necessary authorizations from the Commission for use of radio frequencies. This authority does not apply to acquisitions of corporate control, which are not limited to acquisitions of equity ownership, such as stock or partnership interests, and which include actual working control by whatever manner exercised (such as, for example, by veto power, controlling interest in a board of directors, or other shareholder agreement provisions).

(b) Domestic common carriers subject to this section shall not engage in any line construction that may have a significant effect on the environment as defined in § 1.1307 of this chapter without prior compliance with the Commission's environmental rules. See § 1.1312 of this chapter.

[64 FR 39939, July 23, 1999]

### § 63.02 Exemptions for extensions of lines and for systems for the delivery of video programming.

(a) Any common carrier is exempt from the requirements of section 214 of the Communications Act of 1934, as amended, for the extension of any line.

(b) A common carrier shall not be required to obtain a certificate under section 214 of the Communications Act of 1934 with respect to the establishment or operation of a system for the delivery of video programming.

[64 FR 39939, July 23, 1999]

### § 63.09 Definitions applicable to international Section 214 authorizations.

The following definitions shall apply to §§ 63.09–63.24 of this part, unless the context indicates otherwise:

(a) *Facilities-based carrier* means a carrier that holds an ownership, indefeasible-right-of-user, or leasehold interest in bare capacity in the U.S. end of an international facility, regardless of whether the underlying facility is a common carrier or non-common carrier submarine cable or a satellite system.

(b) *Control* includes actual working control in whatever manner exercised and is not limited to majority stock ownership. *Control* also includes direct or indirect control, such as through intervening subsidiaries.

(c) *Special concession* is defined as in § 63.14(b) of this part.

(d) *Foreign carrier* is defined as any entity that is authorized within a foreign country to engage in the provision of international telecommunications services offered to the public in that country within the meaning of the International Telecommunication Regulations, see Final Acts of the World Administrative Telegraph and Telephone Conference, Melbourne, 1988 (WATTC–88), Art. 1, which includes entities authorized to engage in the provision of domestic telecommunications services if such carriers have the ability to originate or terminate telecommunications services to or from points outside their country.

(e) Two entities are *affiliated* with each other if one of them, or an entity that controls one of them, directly or indirectly owns more than 25 percent of the capital stock of, or controls, the other one.

Also, a U.S. carrier is *affiliated* with two or more foreign carriers if the foreign carriers, or entities that control them, together directly or indirectly own more than 25 percent of the capital stock of, or control, the U.S. carrier and those foreign carriers are parties to, or the beneficiaries of, a contractual relation (e.g., a joint venture or market alliance) affecting the provision or marketing of international basic telecommunications services in the United States.

(f) *Market power* means sufficient market power to affect competition adversely in the U.S. market.

NOTE 1: The assessment of ''capital stock'' ownership will be made under the standards developed in Commission case law for determining such ownership. See, e.g., Fox Television Stations, Inc., 10 FCC Rcd 8452 (1995). ''Capital stock'' includes all forms of equity ownership, including partnership interests.

NOTE 2: Ownership and other interests in U.S. and foreign carriers will be attributed to their holders and deemed cognizable pursuant to the following criteria: Attribution of ownership interests in a carrier that are held indirectly by any party through one or more intervening corporations will be determined by successive multiplication of the ownership percentages for each link in the vertical ownership chain and application of the relevant attribution benchmark to the resulting product, except that wherever the ownership percentage for any link in the

chain exceeds 50 percent, it shall not be included for purposes of this multiplication. For example, if A owns 30 percent of company X, which owns 60 percent of company Y, which owns 26 percent of ''carrier,'' then X's interest in ''carrier'' would be 26 percent (the same as Y's interest because X's interest in Y exceeds 50 percent), and A's interest in ''carrier'' would be 7.8 percent (0.30 × 0.26). Under the 25 percent attribution benchmark, X's interest in ''carrier'' would be cognizable, while A's interest would not be cognizable.

[64 FR 19062, Apr. 19, 1999]

### §63.10 Regulatory classification of U.S. international carriers.

(a) Unless otherwise determined by the Commission, any party authorized to provide an international communications service under this part shall be classified as either dominant or non-dominant for the provision of particular international communications services on particular routes as set forth in this section. The rules set forth in this section shall also apply to determinations of regulatory status pursuant to §§63.11 and 63.13. For purposes of paragraphs (a)(2) and (a)(3) of this section, the relevant markets on the foreign end of a U.S. international route include: international transport facilities or services, including cable landing station access and backhaul facilities; inter-city facilities or services; and local access facilities or services on the foreign end of a particular route.

(1) A U.S. carrier that has no affiliation with, and that itself is not, a foreign carrier in a particular country to which it provides service (i.e., a destination country) shall presumptively be considered non-dominant for the provision of international communications services on that route;

(2) Except as provided in paragraph (a)(4) of this section, a U.S. carrier that is, or that has or acquires an affiliation with a foreign carrier that is a monopoly provider of communications services in a relevant market in a destination country shall presumptively be classified as dominant for the provision of international communications services on that route; and

(3) A U.S. carrier that is, or that has or acquires an affiliation with a foreign carrier that is not a monopoly provider of communications services in a relevant market in a destination country and that seeks to be regulated as non-dominant on that route bears the burden of submitting information to the Commission sufficient to demonstrate that its foreign affiliate lacks sufficient market power on the foreign end of the route to affect competition adversely in the U.S. market. If the U.S. carrier demonstrates that the foreign affiliate lacks 50 percent market share in the international transport and the local access markets on the foreign end of the route, the U.S. carrier shall presumptively be classified as non-dominant.

(4) A carrier that is authorized under this part to provide to a particular destination an international switched service, and that provides such service solely through the resale of an unaffiliated U.S. facilities-based carrier's international switched services (either directly or indirectly through the resale of another U.S. resale carrier's international switched services), shall presumptively be classified as non-dominant for the provision of the authorized service. A carrier regulated as non-dominant pursuant to this subparagraph shall notify the Commission at any time that it begins to provide such service through the resale of an affiliated U.S. facilities-based carrier's international switched services. The carrier will be deemed a dominant carrier on the route absent a Commission finding that the carrier otherwise qualifies for non-dominant regulation pursuant to this section.

(b) Any party that seeks to defeat the presumptions in paragraph (a) of this section shall bear the burden of proof upon any issue it raises as to the proper classification of the U.S. carrier.

(c) Any carrier classified as dominant for the provision of particular services on particular routes under this section shall comply with the following requirements in its provision of such services on each such route:

(1) File international service tariffs pursuant to §61.28 of this chapter.

(2) Provide services as an entity that is separate from its foreign carrier affiliate, in compliance with the following requirements:

(i) The authorized carrier shall maintain separate books of account from its affiliated foreign carrier. These separate books of account do not need to comply with Part 32 of this chapter; and

(ii) The authorized carrier shall not jointly own transmission or switching facilities with its affiliated foreign carrier. Nothing in this section prohibits the U.S. carrier from sharing personnel or other resources or assets with its foreign affiliate;

(3) File quarterly reports on traffic and revenue, consistent with the reporting requirements authorized pursuant to § 43.61, within 90 days from the end of each calendar quarter;

(4) File quarterly reports summarizing the provisioning and maintenance of all basic network facilities and services procured from its foreign carrier affiliate or from an allied foreign carrier, including, but not limited to, those it procures on behalf of customers of any joint venture for the provision of U.S. basic or enhanced services in which the authorized carrier and the foreign carrier participate, within 90 days from the end of each calendar quarter. These reports should contain the following: the types of circuits and services provided; the average time intervals between order and delivery; the number of outages and intervals between fault report and service restoration; and for circuits used to provide international switched service, the percentage of ''peak hour'' calls that failed to complete;

(5) In the case of an authorized facilities-based carrier, file quarterly circuit status reports within 90 days from the end of each calendar quarter in the format set out by the § 43.82 annual circuit status manual, with two exceptions: activated or idle circuits must be reported on a facility-by-facility basis; and the derived circuits need not be specified in the three quarterly reports due on June 30, September 30, and December 31.

(6) If authorized to provide facilities-based service, comply with paragraph (e) of this section.

(d) A carrier classified as dominant under this section shall file an original and two copies of each report required by paragraphs (c)(3), (c)(4), and (c)(5) of this section with the Chief, International Bureau. The carrier shall include with its filings separate computer diskettes for the reports required by paragraphs (c)(3) and (c)(5), in the format specified by the § 43.61 and § 43.82 filing manuals, respectively. The carrier shall also file one paper copy of these reports, accompanied by the appropriate computer diskettes, with the Commission's copy contractor. The transmittal letter accompanying each report shall clearly identify the report as responsive to the appropriate paragraph of § 63.10(c).

(e) Except as otherwise ordered by the Commission, a carrier that is classified as dominant under this section for the provision of facilities-based services on a particular route and that is affiliated with a carrier that collects settlement payments for terminating U.S. international switched traffic at the foreign end of that route may not provide facilities-based service on that route unless the current rates the affiliate charges U.S. international carriers to terminate traffic are at or below the Commission's relevant benchmark adopted in IB Docket No. 96–261. *See* FCC 97–280 (12 FCC Rcd 19806 (1997) (62 FR 45758, August 29, 1997)), (available at the FCC's Reference Operations Division, Washington, D.C. 20554, and on the FCC's World Wide Web Site at http://www.fcc.gov).

[62 FR 64752, Dec. 9, 1997, as amended at 64 FR 19062, Apr. 19, 1999; 64 FR 46593, Aug. 26, 1999; 64 FR 47702, Sept. 1, 1999]

### § 63.11 Notification by and prior approval for U.S. international carriers that are or propose to become affiliated with a foreign carrier.

(a) Any carrier authorized to provide international communications service under this part shall notify the Commission sixty days prior to the consummation of either of the following acquisitions of direct or indirect interests in or by foreign carriers:

(1) Acquisition of a controlling interest in a foreign carrier by the authorized carrier, or by any entity that controls the authorized carrier, or that directly or indirectly owns more than 25 percent of the capital stock of the authorized carrier; or

(2) Acquisition of a direct or indirect interest greater than 25 percent, or a controlling interest, in the capital stock of the authorized carrier by a foreign carrier or by an entity that controls a foreign carrier.

(b) Any carrier authorized to provide international communications service under this part that becomes affiliated with a foreign carrier that has not previously notified the Commission pursuant to this section or §63.18 shall notify the Commission within thirty days after acquiring the affiliation. In particular, acquisition by an authorized carrier (or by any entity that directly or indirectly controls, is controlled by, or is under direct or indirect common control with the authorized carrier) of a direct or indirect interest in a foreign carrier that is greater than 25 percent but not controlling is subject to this paragraph but not to paragraph (a).

(c) The notification required under paragraphs (a) and (b) of this section shall contain a list of the affiliated foreign carriers named in paragraphs (a) and (b) of this section and shall state individually the country or countries in which the foreign carriers are authorized to provide telecommunications services to the public. It shall additionally specify which, if any, of these countries is a Member of the World Trade Organization; which, if any, of these countries the U.S. carrier is authorized to serve under this part; what services it is authorized to provide to each such country; and the FCC File No. under which each such authorization was granted. The notification shall certify to the information specified in this paragraph.

(1) The carrier also should specify, where applicable, those countries named in response to paragraph (c) of this section for which it provides international switched services solely through the resale of the international switched services of unaffiliated U.S. facilities-based carriers.

(2) The carrier shall also submit with its notification:

(i) The name, address, citizenship and principal businesses of any person or entity that directly or indirectly owns at least ten percent of the equity of the applicant, and the percentage of equity owned by each of those entities (to the nearest one percent). The applicant shall also identify any interlocking directorates with a foreign carrier.

(ii) A certification that the applicant has not agreed to accept special concessions directly or indirectly from any foreign carrier with respect to any U.S. international route where the foreign carrier possesses market power on the foreign end of the route and will not enter into such agreements in the future.

(d) In order to retain non-dominant status on the affiliated route, the carrier notifying the Commission of a foreign carrier affiliation under paragraph (a) or (b) of this section should provide information to demonstrate that it qualifies for non-dominant classification pursuant to §63.10.

(e) After the Commission issues a public notice of the submissions made under this section, interested parties may file comments within 14 days of the public notice.

(1) In the case of a notification filed under this section, the Commission, if it deems it necessary, will by written order at any time before or after the deadline for submission of public comments impose dominant carrier regulation on the carrier for the affiliated routes based on the provisions of §63.10 of this part.

(2) The Commission will presume the investment to be in the public interest unless the Commission notifies the carrier that the investment raises a substantial and material question of fact as to whether the investment serves the public interest, convenience and necessity. Such notification shall be in writing within 30 days of the issuance of the public notice. If notified that the investment raises a substantial and material question, then the carrier shall not consummate the planned investment until it has filed a complete application under §63.18, including §63.18(k) of this part, and the Commission has approved the application by formal written order.

(f) All authorized carriers are responsible for the continuing accuracy of certifications with regard to affiliations with foreign carriers made under this section and under §63.18. Whenever the substance of any such certification is no longer accurate, the

carrier shall as promptly as possible, and in any event within thirty days, file with the Secretary in duplicate a corrected certification referencing the FCC File No. under which the original certification was provided, *except that* the carrier shall immediately inform the Commission if at any time the representations in the ''special concessions'' certification provided under paragraph (c)(2)(ii) of this section or § 63.18(n) are no longer true. *See* § 63.18(n). This information may be used by the Commission to determine whether a change in regulatory status may be warranted under § 63.10.

[62 FR 64753, Dec. 9, 1997, as amended at 64 FR 19062, Apr. 19, 1999]

### § 63.12 Processing of international Section 214 applications.

(a) Except as provided by paragraph (c) of this section, a complete application seeking authorization under § 63.18 of this part shall be granted by the Commission 14 days after the date of public notice listing the application as accepted for filing.

(b) The applicant may commence operation on the 15th day after the date of public notice listing the application as accepted for filing, but only in accordance with the operations proposed in its application and the rules, regulations, and policies of the Commission. The public notice of the grant of the authorization shall represent the applicant's Section 214 certificate.

(c) The streamlined processing procedures provided by paragraphs (a) and (b) of this section shall not apply where:

(1) The applicant is affiliated with a foreign carrier in a destination market, unless the applicant clearly demonstrates in its application at least one of the following:

(i) The Commission has previously determined that the affiliated foreign carrier lacks market power in that destination market;

(ii) The applicant qualifies for a presumption of non-dominance under § 63.10(a)(3);

(iii) The affiliated foreign carrier owns no facilities, or only mobile wireless facilities, in that destination market. For this purpose, a carrier is said to own facilities if it holds an ownership, indefeasible-right-of-user, or leasehold interest in bare capacity in international or domestic telecommunications facilities (excluding switches);

(iv) The affiliated destination market is a WTO Member country and the applicant qualifies for a presumption of non-dominance under § 63.10(a)(4)of this part;

(v) The affiliated destination market is a WTO Member country and the applicant agrees to be classified as a dominant carrier to the affiliated destination country under § 63.10, without prejudice to its right to petition for reclassification at a later date; or

(vi) An entity with exactly the same ultimate ownership as the applicant has been authorized to provide the applied-for services on the affiliated destination route, and the applicant agrees to be subject to all of the conditions to which the authorized carrier is subject for its provision of service on that route; or

(2) The applicant has an affiliation with a dominant U.S. carrier whose international switched or private line services the applicant seeks authority to resell (either directly or indirectly through the resale of another reseller's services), unless the applicant agrees to be classified as a dominant carrier to the affiliated destination country under § 63.10 (without prejudice to its right to petition for reclassification at a later date); or

(3) The applicant seeks authority to provide switched basic services over private lines to a country for which the Commission has not previously authorized the provision of switched services over private lines; or

(4) The Commission has informed the applicant in writing, within 14 days after the date of public notice listing the application as accepted for filing, that the application is not eligible for streamlined processing.

(d) If an application is deemed complete but, pursuant to paragraph (c) of this section, is deemed ineligible for the streamlined processing procedures provided by paragraphs (a) and (b) of this section, the Commission will issue public notice indicating that the application is ineligible for streamlined processing. Within 90 days of the public

notice, the Commission will take action upon the application or provide public notice that, because the application raises questions of extraordinary complexity, an additional 90-day period for review is needed. Each successive 90-day period may be so extended. The application shall not be deemed granted until the Commission affirmatively acts upon the application. Operation for which such authorization is sought may not commence except in accordance with any terms or conditions imposed by the Commission.

[62 FR 64753, Dec. 9, 1997, as amended at 64 FR 19063, Apr. 19, 1999; 64 FR 22903, Apr. 28, 1999; 64 FR 43095, Aug. 9, 1999]

### §63.13 Procedures for modifying regulatory classification of U.S. international carriers from dominant to non-dominant.

Any party that desires to modify its regulatory status from dominant to non-dominant for the provision of particular international communications services on a particular route should provide information in its application to demonstrate that it qualifies for non-dominant classification pursuant to §63.10.

[62 FR 64754, Dec. 9, 1997]

### §63.14 Prohibition on agreeing to accept special concessions.

(a) Any carrier authorized to provide international communications service under this part shall be prohibited, except as provided in paragraph (c) of this section, from agreeing to accept special concessions directly or indirectly from any foreign carrier with respect to any U.S. international route where the foreign carrier possesses sufficient market power on the foreign end of the route to affect competition adversely in the U.S. market and from agreeing to accept special concessions in the future.

NOTE TO PARAGRAPH (a): Carriers may rely on the Commission's list of foreign carriers that do not qualify for the presumption that they lack market power in particular foreign points for purposes of determining which foreign carriers are the subject of the prohibitions contained in this section. The Commission's list of foreign carriers that do not qualify for the presumption that they lack market power is available from the International Bureau's World Wide Web site at http://www.fcc.gov/ib.

(b) A special concession is defined as an exclusive arrangement involving services, facilities, or functions on the foreign end of a U.S. international route that are necessary for the provision of basic telecommunications services where the arrangement is not offered to similarly situated U.S.-licensed carriers and involves:

(1) Operating agreements for the provision of basic services;

(2) Distribution arrangements or interconnection arrangements, including pricing, technical specifications, functional capabilities, or other quality and operational characteristics, such as provisioning and maintenance times; or

(3) Any information, prior to public disclosure, about a foreign carrier's basic network services that affects either the provision of basic or enhanced services or interconnection to the foreign country's domestic network by U.S. carriers or their U.S. customers.

(c) This section shall not apply to the rates, terms and conditions in an agreement between a U.S. carrier and a foreign carrier that govern the settlement of international traffic, including the method for allocating return traffic, if the international route is exempt from the international settlements policy under §43.51(g)(2) of this chapter.

[62 FR 64754, Dec. 9, 1997, as amended at 64 FR 19063, Apr. 19, 1999; 64 FR 34741, June 29, 1999]

### §63.16 Switched services over private lines.

(a) Except as provided in §§63.22 (e)(2) and 63.23(d)(2), a carrier may provide switched basic services over its authorized private lines if and only if the country at the foreign end of the private line appears on a Commission list of destinations to which the Commission has authorized the provision of switched services over private lines. The list of authorized destinations is available from the International Bureau's World Wide Web site at http://www.fcc.gov/ib.

(b) An authorized carrier seeking to add a foreign market to the list of markets for which carriers may provide

switched services over private lines must make the following showing:

(1) If seeking a Commission ruling to permit the provision of international switched basic services over private lines between the United States and a WTO Member country, the applicant shall demonstrate either that settlement rates for at least 50 percent of the settled U.S.-billed traffic between the United States and the country at the foreign end of the private line are at or below the benchmark settlement rate adopted for that country in IB Docket No. 96–261 *or* that the country affords resale opportunities equivalent to those available under U.S. law (see paragraph (c) of this section).

(2) If seeking a Commission ruling to permit the provision of international switched basic services over private lines between the United States and a non-WTO Member country, the applicant shall demonstrate that settlement rates for at least 50 percent of the settled U.S.-billed traffic between the United States and the country at the foreign end of the private line are at or below the benchmark settlement rate adopted for that country in IB Docket No. 96–261 that the country affords resale opportunities equivalent to those available under U.S. law (see paragraph (c) of this section).

(c) With regard to showing under paragraph (b) of this section that a destination country affords resale opportunities equivalent to those available under U.S. law, an applicant shall include evidence demonstrating that equivalent resale opportunities exist between the United States and the subject country, including any relevant bilateral or multilateral agreements between the administrations involved. The applicant must demonstrate that the foreign country at the other end of the private line provides U.S.-based carriers with:

(1) The legal right to resell international private lines, interconnected at both ends, for the provision of switched services;

(2) Reasonable and nondiscriminatory charges, terms and conditions for interconnection to foreign domestic carrier facilities for termination and origination of international services, with adequate means of enforcement;

(3) Competitive safeguards to protect against anticompetitive and discriminatory practices affecting private line resale; and

(4) Fair and transparent regulatory procedures, including separation between the regulator and operator of international facilities-based services.

(d) The showing required by paragraph (b) of this section may be made in a Section 214 application filed pursuant to § 63.18 of this part or in a petition for declaratory ruling addressed to the attention of the International Bureau and indicating clearly the name of the party seeking the declaration and the destination points for which the declaration is sought. The Commission will issue public notice of the filing of the request and may, in each case, determine an appropriate deadline for filing comments. Unopposed requests may be granted by public notice.

NOTE 1 TO § 63.16: The Commission's benchmark settlement rates are available in International Settlement Rates, IB Docket No. 96–261, *Report and Order*, FCC 97–280, 12 FCC Rcd 19,806, 62 FR 45758 (August 29, 1997).

[64 FR 19063, Apr. 19, 1999, as amended at 64 FR 34741, June 29, 1999]

### § 63.17 Special provisions for U.S. international common carriers.

(a) Unless otherwise prohibited by the terms of its Section 214 certificate, a U.S. common carrier authorized under this part to provide international private line service, whether as a reseller or facilities-based carrier, may interconnect its authorized private lines to the public switched network on behalf of an end user customer for the end user customer's own use.

(b) Except as provided in paragraph (b)(4) of this section, a U.S. common carrier, whether a reseller or facilities-based carrier, may engage in ''switched hubbing'' to countries for which the Commission has not authorized the provision of switched basic services over private lines provided the carrier complies with the following conditions:

(1) U.S.-outbound switched traffic shall be routed over the carrier's authorized U.S. international private lines to a country for which the Commission has authorized the provision of switched services over private lines

(i.e., the ''hub'' country), and then forwarded to the third country only by taking at published rates and reselling the international message telephone service (IMTS) of a carrier in the hub country;

(2) U.S.-inbound switched traffic shall be carried to a country for which the Commission has authorized the provision of switched services over private lines (i.e., the ''hub'' country) as part of the IMTS traffic flow from a third country and then terminated in the United States over U.S. international private lines from the hub country;

(3) U.S. common carriers that route U.S.-billed traffic via switched hubbing shall tariff their service on a ''through'' basis between the United States and the ultimate point of origination or termination;

(4) No U.S. common carrier may engage in switched hubbing to or from a third country where it has an affiliation with a foreign carrier unless and until it has received authority to serve that country under §63.18(e)(1), (e)(2), or (e)(4) of this part.

[60 FR 67339, Dec. 29, 1995, as amended at 61 FR 15728, Apr. 9, 1996; 63 FR 64754, Dec. 9, 1997; 64 FR 19064, Apr. 19, 1999]

### §63.18 Contents of applications for international common carriers.

Except as otherwise provided in this part, any party seeking authority pursuant to Section 214 of the Communications Act of 1934, as amended, to construct a new line, or acquire or operate any line, or engage in transmission over or by means of such additional line for the provision of common carrier communications services between the United States, its territories or possessions, and a foreign point shall request such authority by formal application which shall be accompanied by a statement showing how the grant of the application will serve the public interest, convenience, and necessity. Such statement shall consist of the following information, as applicable:

(a) The name, address, and telephone number of each applicant;

(b) The Government, State, or Territory under the laws of which each corporate or partnership applicant is organized;

(c) The name, title, post office address, and telephone number of the officer and any other contact point, such as legal counsel, to whom correspondence concerning the application is to be addressed;

(d) A statement as to whether the applicant has previously received authority under Section 214 of the Act and, if so, a general description of the categories of facilities and services authorized (i.e., authorized to provide international switched services on a facilities basis);

(e) One or more of the following statements, as pertinent:

(1) *Global facilities-based authority*. If applying for authority to become a facilities-based international common carrier subject to §63.22 of this part, the applicant shall:

(i) State that it is requesting Section 214 authority to operate as a facilities-based carrier pursuant to §63.18(e)(1) of this part of the Commission's rules;

(ii) List any countries for which the applicant does not request authorization under this paragraph (see §63.22(a) of this part); and

(iii) Certify that it will comply with the terms and conditions contained in §§63.21 and 63.22 of this part.

(2) *Global resale authority*. If applying for authority to resell the international services of authorized U.S. common carriers subjectto §63.23 of this part, the applicant shall:

(i) State that it is requesting Section 214 authority to operate as a resale carrier pursuant to §63.18(e)(2) of this section of the Commission's rules;

(ii) List any countries for which the applicant does not request authorization under this paragraph (see §63.23(a) of this part); and

(iii) Certify that it will comply with the terms and conditions contained in §§63.21 and 63.23 of this part.

(3) *Transfer of control or assignment*. If applying for authority to transfer control of a common carrier holding international Section 214 authorization or to acquire, by assignment, another carrier's existing international Section 214 authorization, the applicant shall complete paragraphs (a) through (d) of this section for both the transferor/assignor and the transferee/assignee. Only the transferee/assignee needs to complete

paragraphs (h) through (p) of this section. At the beginning of the application, the applicant should also include a narrative of the means by which the transfer or assignment will take place. The Commission reserves the right to request additional information as to the particulars of the transaction to aid it in making its public interest determination. An assignee or transferee shall notify the Commission no later than 30 days after either consummation of the assignment or transfer or a decision not to consummate the assignment or transfer. The notification may be by letter and shall identify the file numbers under which the initial authorization and the authorization of the assignment or transfer were granted. See also § 63.24 of this part (*pro forma* assignments and transfers of control).

(4) *Other authorizations.* If applying for authority to acquire facilities or to provide services not covered by paragraphs (e)(1) through (e)(3), the applicant shall provide a description of the facilities and services for which it seeks authorization. The applicant shall certify that it will comply with the terms and conditions contained in § 63.21 and § 63.22 and/or § 63.23 of this part, as appropriate. Such description also shall include any additional information the Commission shall have specified previously in an order, public notice or other official action as necessary for authorization.

(f) Applicants may apply for any or all of the authority provided for in paragraph (e) of this section in the same application. The applicant may want to file separate applications for those services not subject to streamlined processing under § 63.12.

(g) Where the applicant is seeking facilities-based authority under paragraph (e)(4) of this section, a statement whether an authorization of the facilities is categorically excluded as defined by § 1.1306 of this chapter. If answered affirmatively, an environmental assessment as described in § 1.1311 of this chapter need not be filed with the application.

(h) The name, address, citizenship and principal businesses of any person or entity that directly or indirectly owns at least ten percent of the equity of the applicant, and the percentage of equity owned by each of those entities (to the nearest one percent). The applicant shall also identify any interlocking directorates with a foreign carrier.

(i) A certification as to whether or not the applicant is, or is affiliated with, a foreign carrier. The certification shall state with specificity each foreign country in which the applicant is, or is affiliated with, a foreign carrier.

(j) A certification as to whether or not the applicant seeks to provide international telecommunications services to any destination country for which any of the following is true. The certification shall state with specificity the foreign carriers and destination countries:

(1) The applicant is a foreign carrier in that country; or

(2) The applicant controls a foreign carrier in that country; or

(3) Any entity that owns more than 25 percent of the applicant, or that controls the applicant, controls a foreign carrier in that country.

(4) Two or more foreign carriers (or parties that control foreign carriers) own, in the aggregate, more than 25 percent of the applicant and are parties to, or the beneficiaries of, a contractual relation (e.g., a joint venture or market alliance) affecting the provision or marketing of international basic telecommunications services in the United States.

(k) For any destination country listed by the applicant in response to paragraph (j) of this section, the applicant shall make one of the following showings:

(1) The named foreign country (i.e., the destination foreign country) is a Member of the World Trade Organization; or

(2) The applicant's affiliated foreign carrier lacks market power in the named foreign country; or

(3) The named foreign country provides effective competitive opportunities to U.S. carriers to compete in that country's market for the service that the applicant seeks to provide (facilities-based, resold switched, or resold

non-interconnected private line services). An effective competitive opportunities demonstration should address the following factors:

(i) If the applicant seeks to provide facilities-based international services, the legal ability of U.S. carriers to enter the foreign market and provide facilities-based international services, in particular international message telephone service (IMTS);

(ii) If the applicant seeks to provide resold services, the legal ability of U.S. carriers to enter the foreign market and provide resold international switched services (for switched resale applications) or non-interconnected private line services (for non-interconnected private line resale applications);

(iii) Whether there exist reasonable and nondiscriminatory charges, terms and conditions for interconnection to a foreign carrier's domestic facilities for termination and origination of international services or the provision of the relevant resale service;

(iv) Whether competitive safeguards exist in the foreign country to protect against anticompetitive practices, including safeguards such as:

(A) Existence of cost-allocation rules in the foreign country to prevent cross-subsidization;

(B) Timely and nondiscriminatory disclosure of technical information needed to use, or interconnect with, carriers' facilities; and

(C) Protection of carrier and customer proprietary information;

(v) Whether there is an effective regulatory framework in the foreign country to develop, implement and enforce legal requirements, interconnection arrangements and other safeguards; and

(vi) Any other factors the applicant deems relevant to its demonstration.

(l) Any applicant that proposes to resell the international switched services of an unaffiliated U.S. carrier for the purpose of providing international telecommunications services to a country where it is a foreign carrier or is affiliated with a foreign carrier shall either provide a showing that would satisfy §63.10(a)(3) of this part or state that it will file the quarterly traffic reports required by §43.61(c) of this chapter.

(m) With respect to regulatory classification under §63.10 of this part, any applicant that is or is affiliated with a foreign carrier in a country listed in response to paragraph (i) of this section and that desires to be regulated as non-dominant for the provision of particular international telecommunications services to that country should provide information in its application to demonstrate that it qualifies for non-dominant classification pursuant to §63.10 of this part.

(n) A certification that the applicant has not agreed to accept special concessions directly or indirectly from any foreign carrier with respect to any U.S. international route where the foreign carrier possesses market power on the foreign end of the route and will not enter into such agreements in the future.

(o) A certification pursuant to §§1.2001 through 1.2003 of this chapter that no party to the application is subject to a denial of Federal benefits pursuant to Section 5301 of the Anti-Drug Abuse Act of 1988. *See* 21 U.S.C. 853a.

(p) If the applicant desires streamlined processing pursuant to §63.12, a statement of how the application qualifies for streamlined processing.

NOTE 1 TO PARAGRAPH (H): The word ''control'' as used in this section is not limited to majority stock ownership, but includes actual working control in whatever manner exercised.

NOTE 2 TO PARAGRAPH (H): The term ''facilities-based carrier'' as used in this section means one that holds an ownership, indefeasible-right-of-user, or leasehold interest in bare capacity in an international facility, regardless of whether the underlying facility is a common or non-common carrier submarine cable, or an INTELSAT or separate satellite system.

NOTE 3 TO PARAGRAPH (H): The assessment of ''capital stock'' ownership will be made under the standards developed in Commission case law for determining such ownership. *See, e.g., Fox Television Stations, Inc.,* 10 FCC Rcd 8452 (1995). ''Capital stock'' includes all forms of equity ownership, including partnership interests.

NOTE 4 TO PARAGRAPH (H): Ownership and other interests in U.S. and foreign carriers will be attributed to their holders and deemed cognizable pursuant to the following criteria: Attribution of ownership interests in a carrier that are held indirectly by any party through one or more intervening corporations will be determined by successive

multiplication of the ownership percentages for each link in the vertical ownership chain and application of the relevant attribution benchmark to the resulting product, except that wherever the ownership percentage for any link in the chain exceeds 50 percent, it shall not be included for purposes of this multiplication. For example, if A owns 30 percent of company X, which owns 60 percent of company Y, which owns 26 percent of ''carrier,'' then X's interest in ''carrier'' would be 26 percent (the same as Y's interest because X's interest in Y exceeds 50 percent), and A's interest in ''carrier'' would be 7.8 percent ($0.30 \times 0.26$). Under the 25 percent attribution benchmark, X's interest in ''carrier'' would be cognizable, while A's interest would not be cognizable.

[61 FR 15729, Apr. 9, 1996, as amended at 62 FR 32965, June 17, 1997; 62 FR 45762, Aug. 29, 1997; 62 FR 64755, Dec. 9, 1997; 63 FR 24121, May 1, 1998; 64 FR 19064, Apr. 19, 1999]

### § 63.19 Special procedures for discontinuances of international services.

(a) Any non-dominant international carrier as this term is defined in § 63.10 that seeks to discontinue, reduce or impair service, including the retiring of international facilities, dismantling or removing of international trunk lines, shall be subject to the following procedures in lieu of those specified in §§ 63.61 through 63.601:

(1) The carrier shall notify all affected customers of the planned discontinuance, reduction or impairment at least 60 days prior to its planned action. Notice shall be in writing to each affected customer unless the Commission authorizes in advance, for good cause shown, another form of notice.

(2) The carrier shall file with this Commission a copy of the notification on or after the date on which notice has been given to all affected customers.

(b) Any dominant international carrier as this term is defined in § 63.10 that seeks to retire international facilities, dismantle or remove international trunk lines, and the services being provided through these facilities are not being discontinued, reduced or impaired, shall only be subject to the notification requirements of paragraph (a) of this section. If such carrier discontinues, reduces or impairs service to a community or retires facilities that impair or reduce service to a community, the dominant carrier shall file an application pursuant to §§ 63.62 and 63.500.

[61 FR 15732, Apr. 9, 1996]

### § 63.20 Copies required; fees; and filing periods for international service providers.

(a) Unless otherwise specified the Commission shall be furnished with an original and five copies of applications filed for international facilities and services under Section 214 of the Communications Act of 1934, as amended. Provided, however, that where applications involve only the supplementation of existing international facilities, and the issuance of a certificate is not required, an original and two copies of the application shall be furnished. Upon request by the Commission, additional copies of the application shall be furnished. Each application shall be accompanied by the fee prescribed in subpart G of part 1 of this chapter.

(b) No application accepted for filing and subject to the provisions of §§ 63.18, 63.62 or 63.505 of this part shall be granted by the Commission earlier than 28 days following issuance of public notice by the Commission of the acceptance for filing of such application or any major amendment unless said public notice specifies another time period, or the application qualifies for streamlined processing pursuant to § 63.12 of this part.

(c) No application accepted for filing and subject to the streamlined processing provisions of § 63.12 of this part shall be granted by the Commission earlier than 14 days following issuance of public notice by the Commission of the acceptance for filing of such application or any major amendment unless said public notice specifies another time period.

(d) Any interested party may file a petition to deny an application within the time period specified in the public notice listing an application as accepted for filing and ineligible for streamlined processing. The petitioner shall serve a copy of such petition on the applicant no later than the date of filing thereof with the Commission. The petition shall contain specific allegations of fact sufficient to show that the petitioner is a party in interest and that a

grant of the application would be prima facie inconsistent with the public interest, convenience and necessity. Such allegations of fact shall, except for those of which official notice may be taken, be supported by affidavit of a person or persons with personal knowledge thereof. The applicant may file an opposition to any petition to deny within 14 days after the original pleading is filed. The petitioner may file a reply to such opposition within seven days after the time for filing oppositions has expired. Allegations of facts or denials thereof shall similarly be supported by affidavit. These responsive pleadings shall be served on the applicant or petitioner, as appropriate, and other parties to the proceeding.

[61 FR 15732, Apr. 9, 1996, as amended at 64 FR 19065, Apr. 19, 1999]

### §63.21 Conditions applicable to all international Section 214 authorizations.

International carriers authorized under Section 214 of the Communications Act of 1934, as amended, must follow the following requirements and prohibitions:

(a) Each carrier is responsible for the continuing accuracy of the certifications made in its application. Whenever the substance of any such certification is no longer accurate, the carrier shall as promptly as possible and in any event within thirty days file with the Secretary in duplicate a corrected certification referencing the FCC file number under which the original certification was provided. The information may be used by the Commission to determine whether a change in regulatory status may be warranted under §63.10 of this part. See also §63.11 of this part.

(b) Carriers must file copies of operating agreements entered into with their foreign correspondents within 30 days of their execution, and shall otherwise comply with the filing requirements contained in §43.51 of this chapter.

(c) Carriers must file tariffs pursuant to Section 203 of the Communications Act, 47 U.S.C. 203, and part 61 of this chapter.

(d) Carriers must file annual reports of overseas telecommunications traffic as required by §43.61 of this chapter.

(e) Authorized carriers may not access or make use of specific U.S. customer proprietary network information that is derived from a foreign network unless the carrier obtains approval from that U.S. customer. In seeking to obtain approval, the carrier must notify the U.S. customer that the customer may require the carrier to disclose the information to unaffiliated third parties upon written request by the customer.

(f) Authorized carriers may not receive from a foreign carrier any proprietary or confidential information pertaining to a competing U.S. carrier, obtained by the foreign carrier in the course of its normal business dealings, unless the competing U.S. carrier provides its permission in writing.

(g) The Commission reserves the right to review a carrier's authorization, and, if warranted, impose additional requirements on U.S. international carriers in circumstances where it appears that harm to competition is occurring on one or more U.S. international routes.

(h) Carriers regulated as dominant must provide the Commission with the following information within 30 days after conveyance of transmission capacity on submarine cables to other U.S. carriers:

(1) The name of the party to whom the capacity was conveyed;

(2) The name of the facility in which capacity was conveyed;

(3) The amount of capacity that was conveyed; and

(4) The price of the capacity conveyed.

(i) Subject to the requirement of §63.10 of this part that a carrier regulated as dominant along a route must provide service as an entity that is separate from its foreign carrier affiliate, and subject to any other structural-separation requirement in Commission regulations, an authorized carrier may provide service through any wholly owned direct or indirect subsidiaries. The carrier shall, within 30 days after the subsidiary begins providing service,

file a letter with the Secretary in duplicate referencing the authorized carrier's name and the FCC file numbers under which the carrier's authorizations were granted and identifying the subsidiary's name and place of legal organization. This provision shall not be construed to authorize the provision of service by any entity barred by statute or regulation from itself holding an authorization or providing service.

(j) An authorized carrier, or a subsidiary operating pursuant to paragraph (i) of this section, that changes its name (including the name under which it is doing business) shall notify the Commission by letter filed with the Secretary in duplicate within 30 days of the name change. Such letter shall reference the FCC file numbers under which the carrier's authorizations were granted.

[61 FR 15732, Apr. 9, 1996, as amended at 62 FR 45762, Aug. 29, 1997; 62 FR 64758, Dec. 9, 1997; 64 FR 19065, Apr. 19, 1999]

### § 63.22 Facilities-based international common carriers.

The following conditions apply to authorized facilities-based international carriers:

(a) A carrier authorized under § 63.18(e)(1) of this part may provide international facilities-based services to international points for which it qualifies for non-dominant regulation as set forth in § 63.10 of this part, except in the following circumstance: If the carrier is, or is affiliated with, a foreign carrier in a destination market and the Commission has not determined that the foreign carrier lacks market power in the destination market (see § 63.10(a) of this part), the carrier shall not provide service on that route unless it has received specific authority to do so under § 63.18(e)(4) of this part.

(b) The carrier may provide service using half-circuits on any appropriately licensed U.S. common carrier and non-common carrier facilities (under either Title III of the Communications Act of 1934, as amended, or the Submarine Cable Landing License Act, 47 U.S.C. 34–39) that do not appear on an exclusion list published by the Commission. Carriers may also use any necessary non-U.S.-licensed facilities, including any submarine cable systems, that do not appear on the exclusion list. Carriers may not use U.S. earth stations to access non-U.S.-licensed satellite systems unless the Commission has specifically approved the use of those satellites and so indicates on the exclusion list, and then only for service to the countries indicated thereon. The exclusion list is available from the International Bureau's World Wide Web site at http://www.fcc.gov/ib.

(c) Specific authority under § 63.18(e)(4) of this part is required for the carrier to provide service using any facilities listed on the exclusion list, to provide service between the United States and any country on the exclusion list, or to construct, acquire, or operate lines in any new major common carrier facility project.

(d) The carrier may provide international basic switched, private line, data, television and business services.

(e)(1) Except as provided in paragraph (e)(2) of this section, the carrier may provide switched basic services over its authorized facilities-based private lines if and only if the country at the foreign end of the private line appears on a Commission list of countries to which the Commission has authorized the provision of switched services over private lines. See § 63.16. If at any time the Commission removes the country from that list or finds that market distortion has occurred in the routing of traffic between the United States and that country, the carrier shall comply with enforcement actions taken by the Commission.

(2) The carrier may use its authorized facilities-based private lines to provide switched basic services in circumstances where the carrier is exchanging switched traffic with a foreign carrier that lacks market power in the country at the foreign end of the private line.

(3) A foreign carrier lacks market power for purposes of paragraph (e)(2) of this section if it does not appear on the Commission's list of foreign carriers that do not qualify for the presumption that they lack market power in particular foreign points. This list is

available from the International Bureau's World Wide Web site at http://www.fcc.gov/ib.

(f) The carrier shall file annual international circuit status reports as required by §43.82 of this chapter.

(g) The authority granted under this part is subject to all Commission rules and regulations and any conditions or limitations stated in the Commission's public notice or order that serves as the carrier's Section 214 certificate. See §§63.12, 63.21 of this part.

[64 FR 19065, Apr. 19, 1999, as amended at 64 FR 34741, June 29, 1999]

### §63.23 Resale-based international common carriers.

The following conditions apply to carriers authorized to resell the international services of other authorized carriers:

(a) A carrier authorized under §63.18(e)(2) of this part may provide resold international services to international points for which the applicant qualifies for non-dominant regulation as set forth in §63.10, except that the carrier may not provide either of the following services unless it has received specific authority to do so under §63.18(e)(4) of this part:

(1) Resold switched services to a non-WTO Member country where the applicant is, or is affiliated with, a foreign carrier; and

(2) Switched or private line services over resold private lines to a destination market where the applicant is, or is affiliated with, a foreign carrier and the Commission has not determined that the foreign carrier lacks market power in the destination market (see §63.10(a) of this part).

(b) The carrier may not resell the international services of an affiliated carrier regulated as dominant on the route to be served unless it has received specific authority to do so under §63.18(e)(4) of this part.

(c) Except as provided in paragraph (b) of this section, the carrier may resell the international services of any authorized common carrier, pursuant to that carrier's tariff or contract duly filed with the Commission, for the provision of international basic switched, private line, data, television and business services to all international points.

(d)(1) Except as provided in paragraph (d)(2) of this section, the carrier may provide switched basic services over its authorized resold private lines if and only if the country at the foreign end of the private line appears on a Commission list of countries to which the Commission has authorized the provision of switched services over private lines. See §63.16. If at any time the Commission removes the country from that list or finds that market distortion has occurred in the routing of traffic between the United States and that country, the carrier shall comply with enforcement actions taken by the Commission.

(2) The carrier may use its authorized resold private lines to provide switched basic services in circumstances where the carrier is exchanging switched traffic with a foreign carrier that lacks market power in the country at the foreign end of the private line.

(3) A foreign carrier lacks market power for purposes of paragraph (d)(2) of this section if it does not appear on the Commission's list of foreign carriers that do not qualify for the presumption that they lack market power in particular foreign points. This list is available from the International Bureau's World Wide Web site at http://www.fcc.gov/ib.

(e) Any party certified to provide international resold private lines to a particular geographic market shall report its circuit additions on an annual basis. Circuit additions should indicate the specific services provided (e.g., IMTS or private line) and the country served. This report shall be filed on a consolidated basis not later than March 31 for the preceding calendar year.

(f) The authority granted under this part is subject to all Commission rules and regulations and any conditions or limitations stated in the Commission's public notice or order that serves as the carrier's Section 214 certificate. See §§63.12, 63.21 of this part.

[64 FR 19066, Apr. 19, 1999, as amended at 64 FR 34741, June 29, 1999]

**§ 63.24 Pro forma assignments and transfers of control.**

(a) *Definition.* An assignment of an authorization granted under this part or a transfer of control of a carrier authorized under this part to provide an international telecommunications service is a *pro forma* assignment or transfer of control if it falls into one of the following categories and, together with all previous *pro forma* transactions, does not result in a change in the carrier's ultimate control:

(1) Assignment from an individual or individuals (including partnerships) to a corporation owned and controlled by such individuals or partnerships without any substantial change in their relative interests;

(2) Assignment from a corporation to its individual stockholders without effecting any substantial change in the disposition of their interests;

(3) Assignment or transfer by which certain stockholders retire and the interest transferred is not a controlling one;

(4) Corporate reorganization that involves no substantial change in the beneficial ownership of the corporation (including reincorporation in a different jurisdiction or change in form of the business entity);

(5) Assignment or transfer from a corporation to a wholly owned direct or indirect subsidiary thereof or vice versa, or where there is an assignment from a corporation to a corporation owned or controlled by the assignor stockholders without substantial change in their interests; or

(6) Assignment of less than a controlling interest in a partnership.

(b) Except as provided in paragraph (c) of this section, a *pro forma* assignment or transfer of control of an authorization to provide international telecommunications service is not subject to the requirements of § 63.18 of this part. A *pro forma* assignee or a carrier that is the subject of a *pro forma* transfer of control is not required to seek prior Commission approval for the transaction. A *pro forma* assignee must notify the Commission no later than 30 days after the assignment is consummated. The notification may be in the form of a letter (in duplicate to the Secretary), and it must contain a certification that the assignment was *pro forma* as defined in paragraph (a) of this section and, together with all previous *pro forma* transactions, does not result in a change of the carrier's ultimate control. A single letter may be filed for an assignment of more than one authorization if each authorization is identified by the file number under which it was granted.

[64 FR 19066, Apr. 19, 1999]

**§ 63.25 Special provisions relating to temporary or emergency service by international carriers.**

(a) For the purpose of this section the following definitions shall apply:

(1) *Temporary service* shall mean service for a period not exceeding 6 months;

(2) *Emergency service* shall mean service for which there is an immediate need occasioned by conditions unforeseen by, and beyond the control of, the carrier.

(b) Requests for immediate authority for temporary service or for emergency service may be made by letter or telegram setting forth why such immediate authority is required, the nature of the emergency, the type of facilities proposed to be used, the route kilometers thereof, the terminal communities to be served, and airline kilometers between such communities; how these points are presently being served by the applicant or other carriers, the need for the proposed service, the cost involved including any rentals, the date on which the service is to begin, and where known, the date or approximate date on which the service is to terminate.

(c) Without regard to the other requirements of this part, and by application setting forth the need therefor, any carrier may request continuing authority, subject to termination by the Commission at any time upon 10 days' notice to the carrier, to provide temporary or emergency service by the construction or installation of facilities where the estimated construction, installation, and acquisition costs do not exceed $35,000 or an annual rental of not more than $7,000 provided that such project does not involve a major action under the Commission's environmental rules. (See subpart I of part 1 of this chapter.) Any carrier to which

continuing authority has been granted under this paragraph shall, not later than the 30th day following the end of each 6-month period covered by such authority, file with the Commission a statement in writing making reference to this paragraph and setting forth, with respect to each project (construction, installation, lease, including any renewals thereof), which was commenced or, in the case of leases, entered into under such authority, and renewal or renewals thereof which were in continuous effect for a period of more than one week, the following information:

(1) The type of facility constructed, installed, or leased;

(2) The route kilometers thereof (excluding leased facilities);

(3) The terminal communities served and the airline kilometers between terminal communities in the proposed project;

(4) The cost thereof, including construction, installation, or lease;

(5) Where appropriate, the name of the lessor company, and the dates of commencement and termination of the lease.

(d)(1) A request may be made by any carrier for continuing authority to lease and operate, during any emergency when its regular facilities become inoperative or inadequate to handle its traffic, facilities or any other carrier between points between which applicant is authorized to communicate by radio for the transmission of traffic which applicant is authorized to handle.

(2) Such request may be made by letter or telegram making reference to this paragraph and setting forth the points between which applicant desires to operate facilities of other carriers and the nature of the traffic to be handled thereover.

(3) Continuing authority for the operation thereafter of such alternate facilities during emergencies shall be deemed granted effective as of the 21st day following the filing of the request unless on or before that date the Commission shall notify the applicant to the contrary: provided, however, Applicant shall, not later than the 30th day following the end of each quarter in which it has operated facilities of any other carrier pursuant to authority granted under this paragraph, file with the Commission a statement in writing making reference to this paragraph and describing each occasion during the quarter when it has operated such facilities, giving dates, points between which such facilities were located, hours or minutes used, nature of traffic handled, and reasons why its own facilities could not be used.

(Sec. 303, 48 Stat. 1082, as amended; 47 U.S.C. 303)

[28 FR 13229, Dec. 5, 1963, as amended at 41 FR 20662, May 20, 1976; 58 FR 44906, Aug. 25, 1993. Redesignated and amended at 64 FR 39939, July 23, 1999]

GENERAL PROVISIONS RELATING TO ALL APPLICATIONS UNDER SECTION 214

### § 63.50 Amendment of applications.

Any application may be amended as a matter of right prior to the date of any final action taken by the Commission or designation for hearing. Amendments to applications shall be signed and submitted in the same manner, and with the same number of copies as was the original application. If a petition to deny or other formal objections have been filed to the application, the amendment shall be served on the parties.

(Sec. 303, 48 Stat. 1082, as amended; 47 U.S.C. 303)

[41 FR 20662, May 20, 1976]

### § 63.51 Additional information.

The applicant shall furnish any additional information which the Commission may require after a preliminary examination of the application or request. Where an applicant fails to respond to official correspondence or request for additional material, the application may be dismissed without prejudice.

(Sec. 303, 48 Stat. 1082, as amended; 47 U.S.C. 303)

[41 FR 20662, May 20, 1976]

### § 63.52 Copies required; fees; and filing periods.

(a) Unless otherwise specified the Commission shall be furnished with an original and 5 copies of applications

filed under section 214 of the Communications Act of 1934, as amended; Provided, however, that where applications involve only the supplementation of existing domestic facilities, and the issuance of a certificate is not required, an original and 2 copies of the application shall be furnished. Upon request by the Commission additional copies of the application shall be furnished. Each application shall be accompanied by the fee prescribed in subpart G of part 1 of this chapter.

(b) No application accepted for filing and subject to part 63 of these rules, unless provided for otherwise, shall be granted by the Commission earlier than 30 days following issuance of public notice by the Commission of the acceptance for filing of such application or any major amendment unless said public notice specifies another time period.

(c) Any interested party may file a petition to deny an application within the 30-day or other time period specified in paragraph (b) of this section. The petitioner shall serve a copy of such petition on the applicant no later than the date of filing thereof with the Commission. The petition shall contain specific allegations of fact sufficient to show that the petitioner is a party in interest and that a grant of the application would be prima facie inconsistent with the public interest, convenience and necessity. Such allegations of fact shall, except for those of which official notice may be taken, be supported by affidavit of a person or persons with personal knowledge thereof. The applicant may file an opposition to any petition to deny, and the petitioners may file a reply to such opposition (see § 1.45 of this chapter), and allegations of facts or denials thereof shall similarly be supported by affidavit. These responsive pleadings shall be served on the applicant or petitioners, as appropriate, and other parties to the proceeding.

(Sec. 303, 48 Stat. 1082, as amended; 47 U.S.C. 303)

[41 FR 20662, May 20, 1976; 41 FR 22274, June 2, 1976, as amended at 42 FR 36459, July 15, 1977; 61 FR 10476, Mar. 14, 1996; 61 FR 59201, Nov. 21, 1996; 64 FR 39939, July 23, 1999]

### § 63.53 Form.

(a) Applications under Section 214 of the Communications Act shall be submitted on paper not more than 21.6 cm (8.5 in) wide and not more than 35.6 cm (14 in) long with a left-hand margin of 4 cm (1.5 in). This requirement shall not apply to original documents, or admissible copies thereof, offered as exhibits or to specially prepared exhibits. The impression shall be on one side of the paper only and shall be double-spaced, except that long quotations shall be single-spaced and indented. All papers, except charts and maps, shall be typewritten or prepared by mechanical processing methods, other than letter press, or printed. The foregoing shall not apply to official publications. All copies must be clearly legible.

(b) Applications submitted under Section 214 of the Communications Act for international services may be submitted on computer diskettes pursuant to a filing manual compiled by the International Bureau, but a paper copy of the application with the original signature must accompany the diskette. The manual will specify the type and format of the computer diskettes and the reporting and procedural requirements for such applications.

(c) Applications submitted under Section 214 of the Communications Act for international services and any related pleadings that are in a foreign language shall be accompanied by a certified translation in English.

[61 FR 15733, Apr. 9, 1996]

## DISCONTINUANCE, REDUCTION, OUTAGE AND IMPAIRMENT

### § 63.60 Definitions.

For the purposes of this part, the following definitions shall apply:

(a) *Discontinuance, reduction, or impairment of service* includes, but is not limited to the following:

(1) The closure by a carrier of a telephone exchange rendering interstate or foreign telephone toll service, a public toll station serving a community or part of a community, or a public coast station as defined in § 80.5 of this chapter;

(2) The reduction in hours of service by a carrier at a telephone exchange

rendering interstate or foreign telephone toll service, at any public toll station (except at a toll station at which the availability of service to the public during any specific hours is subject to the control of the agent or other persons controlling the premises on which such office or toll station is located and is not subject to the control of such carrier), or at a public coast station; the term *reduction in hours of service* does not include a shift in hours which does not result in any reduction in the number of hours of service.

(3) [Reserved]

(4) The dismantling or removal from service of any trunk line by a carrier which has the effect of impairing the adequacy or quality of service rendered to any community or part of a community;

(5) The severance by a carrier of physical connection with another carrier (including connecting carriers as defined in section 3(u) of the Communications Act of 1934, as amended) or the termination or suspension of the interchange of traffic with such other carrier;

(b) *Emergency discontinuance, reduction, or impairment of service* means any discontinuance, reduction, or impairment of the service of a carrier occasioned by conditions beyond the control of such carrier where the original service is not restored or comparable service is not established within a reasonable time. For the purpose of this part, a reasonable time shall be deemed to be a period not in excess of the following: 10 days in the case of discontinuance, reduction, or impairment of service at telegraph offices operated directly by the carrier; 15 days in the case of jointly-operated or agency telegraph offices; 10 days in the case of public coast stations; and 60 days in all other cases;

(c) *Public toll station* means a public telephone station, located in a community, through which a carrier provides service to the public, and which is connected directly to a toll line operated by such carrier.

[28 FR 13229, Dec. 5, 1963, as amended at 45 FR 6585, Jan. 29, 1980; 51 FR 31305, Sept. 2, 1986]

### §63.61 Applicability.

Any carrier subject to the provisions of section 214 of the Communications Act of 1934, as amended, except any non-dominant carrier as this term is defined in §61.3(u) of this chapter, proposing to discontinue, reduce, or impair interstate or foreign telephone or telegraph service to a community, or a part of a community, shall request authority therefor by formal application or informal request as specified in the pertinent sections of this part: *Provided, however,* That where service is expanded on an experimental basis for a temporary period of not more than 6 months, no application shall be required to reduce service to its status prior to such expansion but a written notice shall be filed with the Commission within 10 days of the reduction showing (a) date on which, places at which, and extent to which service was expanded and (b) date on which, places at which, and extent to which such expansion of service was discontinued:

*And provided further,* That a licensee of a radio station who has filed an application for authority to discontinue service provided by such station shall during the period that such application is pending before the Commission, continue to file appropriate applications as may be necessary for extension or renewal of station license in order to provide legal authorization for such station to continue in operation pending final action on the application for discontinuance of service.

[28 FR 13229, Dec. 5, 1963, as amended at 45 FR 76169, Nov. 18, 1980; 61 FR 59201, Nov. 21, 1996]

### §63.62 Type of discontinuance, reduction, or impairment of telephone or telegraph service requiring formal application.

Authority for the following types of discontinuance, reduction, or impairment of service shall be requested by formal application containing the information required by the Commission in the appropriate sections to this part, except as provided in paragraph (c) of this section, or in emergency cases (as defined in §63.60(b)) as provided in §63.63:

(a) The dismantling or removal of a trunk line (for contents of application

*see* § 63.500) for all domestic carriers and for dominant international carriers except as modified in § 63.19;

(b) The severance of physical connection or the termination or suspension of the interchange of traffic with another carrier (for contents of application, see § 63.501);

(c) [Reserved]

(d) The closure of a public toll station where no other such toll station of the applicant in the community will continue service (for contents of application, see § 63.504): *Provided, however,* That no application shall be required under this part with respect to the closure of a toll station located in a community where telephone toll service is otherwise available to the public through a telephone exchange connected with the toll lines of a carrier;

(e) Any other type of discontinuance, reduction or impairment of telephone service not specifically provided for by other provisions of this part (for contents of application, see § 63.505);

(f) An application may be filed requesting authority to make a type of reduction in service under specified standards and conditions in lieu of individual applications for each instance coming within the type of reduction in service proposed.

[28 FR 13229, Dec. 5, 1963, as amended at 45 FR 6585, Jan. 29, 1980; 60 FR 35509, July 10, 1995; 61 FR 15733, Apr. 9, 1996]

EFFECTIVE DATE NOTE: At 61 FR 15733, Apr. 9, 1996, in § 63.62, paragraph (a) was revised. This amendment contains information collection and recordkeeping requirements and will not become effective until approval has been given by the Office of Management and Budget.

### § 63.63 Emergency discontinuance, reduction, or impairment of service.

(a) Application for authority for emergency discontinuance, reduction, or impairment of service shall be made by filing an informal request in quintuplicate as soon as practicable but not later than 15 days in the case of public coast stations; or 65 days in all other cases, after the occurrence of the conditions which have occasioned the discontinuance, reduction, or impairment. The request shall make reference to this section and show the following:

(1) The effective date of such discontinuance, reduction, or impairment, and the identification of the service area affected;

(2) The nature and estimated duration of the conditions causing the discontinuance, reduction, or impairment;

(3) The facts showing that such conditions could not reasonably have been foreseen by the carrier in sufficient time to prevent such discontinuance, reduction, or impairment;

(4) A description of the service involved;

(5) The nature of service which will be available or substituted;

(6) The effect upon rates to any person in the community;

(7) The efforts made and to be made by applicant to restore the original service or establish comparable service as expeditiously as possible.

(b) Authority for the emergency discontinuance, reduction, or impairment of service for a period of 60 days shall be deemed to have been granted by the Commission effective as of the date of the filing of the request unless, on or before the 15th day after the date of filing, the Commission shall notify the carrier to the contrary. Renewal of such authority may be requested by letter or telegram, filed with the Commission not later than 10 days prior to the expiration of such 60-day period, making reference to this section and showing that such conditions may reasonably be expected to continue for a further period and what efforts the applicant has made to restore the original or establish comparable service. If the same or comparable service is reestablished before the termination of the emergency authorization, the carrier shall notify the Commission promptly. However, the Commission may, upon specific request of the carrier and upon a proper showing, contained in such informal request, authorize such discontinuance, reduction, or impairment of service for an indefinite period or permanently.

[28 FR 13229, Dec. 5, 1963, as amended at 45 FR 6585, Jan. 29, 1980]

### §63.65 Closure of public toll station where another toll station of applicant in the community will continue service.

(a) Except in emergency cases (as defined in §63.60(b) and as provided in §63.63), authority to close a public toll station in a community in which another toll station of the applicant will continue service shall be requested by an informal request, filed in quintuplicate, making reference to this paragraph and showing the following:

(1) Location of toll station to be closed and distance from nearest toll station to be retained;

(2) Description of service area affected, including approximate population and character of the business of the community;

(3) Average number of toll telephone messages sent-paid and received-collect for the preceding six months;

(4) Average number of telegraph messages sent-paid and received-collect for the preceding six months;

(5) Statement of reasons for desiring to close the station.

(b) Authority for closures requested under paragraph (a) of this section shall be deemed to have been granted by the Commission effective as of the 15th day following the date of filing such request unless, on or before the 15th day, the Commission shall notify the carrier to the contrary.

### §63.66 Closure of or reduction of hours of service at telephone exchanges at military establishments.

Where a carrier desires to close or reduce hours of service at a telephone exchange located at a military establishment because of the deactivation of such establishment, it may, in lieu of filing formal application, file in quintuplicate an informal request. Such request shall make reference to this section and shall set forth the class of office, address, date of proposed closure or reduction, description of service to remain or be substituted, statement as to any difference in charges to the public, and the reasons for the proposed closure or reduction. Authority for such closure or reduction shall be deemed to have been granted by the Commission, effective as of the 15th day following the date of filing of such request, unless, on or before the 15th day, the Commission shall notify the carrier to the contrary.

[45 FR 6585, Jan. 29, 1980]

### §63.71 Procedures for discontinuance, reduction or impairment of service by domestic carriers.

Any domestic carrier that seeks to discontinue, reduce or impair service shall be subject to the following procedures:

(a) The carrier shall notify all affected customers of the planned discontinuance, reduction, or impairment of service and shall notify and submit a copy of its application to the public utility commission and to the Governor of the State in which the discontinuance, reduction, or impairment of service is proposed, and also to the Secretary of Defense, Attn. Special Assistant for Telecommunications, Pentagon, Washington, DC 20301. Notice shall be in writing to each affected customer unless the Commission authorizes in advance, for good cause shown, another form of notice. Notice shall include the following:

(1) Name and address of carrier;

(2) Date of planned service discontinuance, reduction or impairment;

(3) Points of geographic areas of service affected;

(4) Brief description of type of service affected; and

(5) One of the following statements:

(i) If the carrier is non-dominant with respect to the service being discontinued, reduced or impaired, the notice shall state:

> The FCC will normally authorize this proposed discontinuance of service (or reduction or impairment) unless it is shown that customers would be unable to receive service or a reasonable substitute from another carrier or that the public convenience and necessity is otherwise adversely affected. If you wish to object, you should file your comments within 15 days after receipt of this notification. Address them to the Federal Communications Commission, Washington, DC 20554, referencing the §63.71 Application of (carrier's name). Comments should include specific information about the impact of this proposed discontinuance (or reduction or impairment) upon you or your company, including any inability to acquire reasonable substitute service.

(ii) If the carrier is dominant with respect to the service being discontinued, reduced or impaired, the notice shall state:

The FCC will normally authorize this proposed discontinuance of service (or reduction or impairment) unless it is shown that customers would be unable to receive service or a reasonable substitute from another carrier or that the public convenience and necessity is otherwise adversely affected. If you wish to object, you should file your comments within 30 days after receipt of this notification. Address them to the Federal Communications Commission, Washington, DC 20554, referencing the §63.71 Application of (carrier's name). Comments should include specific information about the impact of this proposed discontinuance (or reduction or impairment) upon you or your company, including any inability to acquire reasonable substitute service.

(b) The carrier shall file with this Commission, on or after the date on which notice has been given to all affected customers, an application which shall contain the following:

(1) Caption—''Section 63.71 Application'';

(2) Information listed in §63.71(a) (1) through (4) above;

(3) Brief description of the dates and methods of notice to all affected customers;

(4) Whether the carrier is considered dominant or non-dominant with respect to the service to be discontinued, reduced or impaired; and

(5) Any other information the Commission may require.

(c) The application to discontinue, reduce or impair service, if filed by a domestic, non-dominant carrier, shall be automatically granted on the 31st day after its filing with the Commission without any Commission notification to the applicant unless the Commission has notified the applicant that the grant will not be automatically effective. The application to discontinue, reduce or impair service, if filed by a domestic, dominant carrier, shall be automatically granted on the 60th day after its filing with the Commission without any Commission notification to the applicant unless the Commission has notified the applicant that the grant will not be automatically effective. For purposes of this section, an application will be deemed filed on the date the Commission releases public notice of the filing.

[64 FR 39939, July 23, 1999]

### § 63.90 Publication and posting of notices.

(a) Immediately upon the filing of an application or informal request (except a request under §63.71) for authority to close or otherwise discontinue the operation, or reduce the hours of service at a telephone exchange (except an exchange located at a military establishment), the applicant shall post a public notice at least 51 cm by 61 cm (20 inches by 24 inches), with letter of commensurate size, in a conspicuous place in the exchange affected, and also in the window of any such exchange having window space fronting on a public street at street level. Such notice shall be posted at least 14 days and shall contain the following information, as may be applicable:

(1) Date of first posting of notice;

(2) Name of applicant;

(3) A statement that application has been made to the Federal Communications Commission;

(4) Date when application was filed in the Commission;

(5) A description of the discontinuance, reduction, or impairment of service for which authority is sought including the address or other appropriate identification of the exchange or station involved;

(6) If applicant proposes to reduce hours of service, a description of present and proposed hours of service;

(7) A complete description of the substitute service, if any, to be provided if the application is granted.

(8) A statement that any member of the public desiring to protest or support the application may communicate in writing with the Federal Communications Commission, Washington, DC 20554, on or before a specified date which shall be 20 days from the date of first posting of the notice.

(b) Immediately upon the filing of an application or informal request of the nature described in paragraph (a) of this section, the applicant shall also cause to be published a notice of not less than 10 column centimeters (4 column inches) in size containing information similar to that specified in

paragraph (a), at least once during each of 2 consecutive weeks, in some newspaper of general circulation in the community or part of the community affected.

(c) Immediately upon the filing of an application or informal request or upon the filing of a formal application to close a public toll station (except a toll station located at a military establishment), applicant shall post a public notice at least A3 (29.7 cm × 42.0 cm) or 11 in × 17 in (27.9 cm × 43.2 cm) in size as provided in paragraph (a) of this section or, in lieu thereof, applicant shall cause to be published a newspaper notice as provided in paragraph (b) of this section.

(d) Immediately upon the filing of any application or informal request for authority to discontinue, reduce, or impair service, or any notice of resumption of service under § 63.63(b), the applicant shall give written notice of the filing together with a copy of such application to the State Commission (as defined in section 3(t) of the Communications Act of 1934, as amended) of each State in which any discontinuance, reduction or impairment is proposed.

(e) When the posting, publication, and notification as required in paragraphs (a), (b), (c) and (d) of this section have been completed, applicant shall report such fact to the Commission, stating the name of the newspaper in which publication was made, the name of the Commissions notified, and the dates of posting, publication, and notification.

[45 FR 6585, Jan. 29, 1980, as amended at 45 FR 76169, Nov. 18, 1980; 58 FR 44907, Aug. 25, 1993; 60 FR 35510, July 10, 1995]

### § 63.100 Notification of service outage.

(a) As used in this section:

(1) *Outage* is defined as a significant degradation in the ability of a customer to establish and maintain a channel of communications as a result of failure or degradation in the performance of a carrier's network.

(2) *Customer* is defined as a user purchasing telecommunications service from a common carrier.

(3) *Special offices and facilities* are defined as major airports, major military installations, key government facilities, and nuclear power plants. 911 special facilities are addressed separately in paragraph (a)(4) of this section.

(4) *An outage which potentially affects a 911 special facility* is defined as a significant service degradation, switch or transport, where rerouting to the same or an alternative answering location was not implemented, and involves one or more of the following situations:

(i) Isolation of one or more Public Service Answering Points (PSAPs) for 24 hours or more, if the isolated PSAPs collectively serve less than 30,000 or more access lines, based on the carrier's database of lines served by each PSAP; or

(ii) Loss of call processing capabilities in the E911 tandem(s), for 30 minutes or more, regardless of the number of customers affected; or

(iii) Isolation of one or more PSAP(s), for 30 or more minutes, if the isolated PSAPs collectively serve 30,000 or more access lines, based on the carrier's database of lines served by each PSAP; or

(iv) Isolation of an end office switch or host/remote cluster, for 30 minutes or more, if the switches collectively serve, 30,000 or more access lines.

(5) *Major airports* are defined as those airports described by the Federal Aviation Administration as large or medium hubs. The member agencies of the National Communications System (NCS) will determine which of their locations are ''major military installations'' and ''key government facilities.''

(6) *An outage which ''potentially affects'' a major airport* is defined as an outage that disrupts 50% or more of the air traffic control links or other FAA communications links to any major airport, any outage that has caused an Air Route Traffic Control Center (ARTCC) or major airport to lose it radar, any ARTCC or major airport outage that has received any media attention of which the carrier's reporting personnel are aware, any outage that causes a loss of both primary and backup facilities at any ARTCC or major airport, and any outage to an ARTCC or major airport that is deemed important by the FAA as indicated by FAA inquiry to the carrier management personnel.

(7) *A mission-affecting outage* is defined as an outage that is deemed critical to national security/emergency preparedness (NS/EP) operations of the affected facility by the National Communications System member agency operating the affected facility.

(b) Any local exchange or interexchange common carrier or competitive access provider that operates transmission or switching facilities and provides access service or interstate or international telecommunications service, that experiences an outage which potentially affects 50,000 or more of its customers on any facilities which it owns, operates or leases, must notify the Commission if such outage continues for 30 or more minutes. Satellite carriers and cellular carriers are exempt from this reporting requirement. Notification must be served on the Commission's Duty Officer, on duty 24 hours a day in the FCC's Communications and Crisis Management Center in Washington, DC. Notification may be served on the Commission's Watch Officer on duty at the FCC's Columbia Operations Center in Columbia, MD, or at such other facility designated by the Commission by regulation or (at the time of the emergency) by public announcement only if there is a telephone outage or similar emergency in Washington, DC. The notification must be by facsimile or other record means delivered within 120 minutes of the carrier's first knowledge that the service outage potentially affects 50,000 or more customers, if the outage continues for 30 or more minutes. Notification shall identify a contact person who can provide further information, the telephone number at which the contact person can be reached, and what information is known at the time about the service outage including: the date and estimated time (local time at the location of the outage) of commencement of the outage; the geographic area affected; the estimated number of customers affected; the types of services affected (e.g. interexchange, local, cellular); the duration of the outage, i.e. time elapsed from the estimated commencement of the outage until restoration of full service; the estimated number of blocked calls during the outage; the apparent or known cause of the incident, including the name and type of equipment involved and the specific part of the network affected; methods used to restore service; and the steps taken to prevent recurrences of the outage. When specifying the types of services affected by any reportable outage, carriers must indicate when 911 service was disrupted and rerouting to alternative answering locations was not implemented. The report shall be captioned Initial Service Disruption Report. Lack of any of the above information shall not delay the filing of this report. Not later than thirty days after the outage, the carrier shall file with the Chief, Office of Engineering and Technology, a Final Service Disruption Report providing all available information on the service outage, including any information not contained in its Initial Service Disruption Report and detailing specifically the root cause of the outage and listing and evaluating the effectiveness and application in the immediate case of any best practices or industry standards identified by the Network Reliability Council to eliminate or ameliorate outages of the reported type.

(c) Any local exchange or interexchange common carrier or competitive access provider that operates transmission or switching facilities and provides access service or interstate or international telecommunications service, that experiences an outage which potentially affects at least 30,000 and less than 50,000 of its customers on any facilities which it owns, operates or leases, must notify the Commission if such outage continues for 30 or more minutes. Satellite carriers and cellular carriers are exempt from this reporting requirement. Notification must be served on the Commission's Duty Officer, on duty 24 hours a day in the FCC's Communications and Crisis Management Center in Washington, DC. Notification may be served on the Commission's Watch Officer on duty at the FCC's Columbia Operations Center in Columbia, MD, or at such other facility designated by the Commission by regulation or (at the time of the emergency) by public announcement only if there is a telephone outage or similar emergency in

Washington, DC. The notification must be by facsimile or other record means delivered within 3 days of the carrier's first knowledge that the service outage potentially affects at least 30,000 but less than 50,000 customers, if the outage continues for 30 or more minutes. Notification shall identify the carrier and a contact person who can provide further information, the telephone number at which the contact person can be reached, and what information is known at the time about the service outage including: the date and estimated time (local time at the location of the outage) of commencement of the outage; the geographic area affected; the estimated number of customers affected; the types of services affected (*e.g.* interexchange, local, cellular); the duration of the outage, *i.e.* time elapsed from the estimated commencement of the outage until restoration of full service; the estimated number of blocked calls during the outage; the apparent or known cause of the incident, including the name and type of equipment involved and the specific part of the network affected; methods used to restore service; and the steps taken to prevent recurrences of the outage. When specifying the types of services affected by any reportable outage, carriers must indicate when 911 service was disrupted and rerouting to alternative answering locations was not implemented. The report shall be captioned Initial Service Disruption Report. Lack of any of the above information shall not delay the filing of this report. Not later than thirty days after the outage, the carrier shall file with the Chief, Office of Engineering and Technology, a Final Service Disruption Report providing all available information on the service outage, including any information not contained in its Initial Service Disruption Report and detailing specifically the root cause of the outage and listing and evaluating the effectiveness and application in the immediate case of any best practices or industry standards identified by the Network Reliability Council to eliminate or ameliorate outages of the reported type.

(d) Any local exchange or interexchange carrier or competitive access provider that operates transmission or switching facilities and provides access service or interstate or international telecommunications service that experiences a fire-related incident in any facilities which it owns, operates or leases that impacts 1000 or more service lines must notify the Commission if the incident continues for a period of 30 minutes or longer. Satellite carriers and cellular carriers are exempt from this reporting requirement. Notification must be served on the Commission's Duty Officer, on duty 24 hours a day in the FCC's Communications and Crisis Management Center in Washington, DC. Notification may be served on the Commission's Watch Officer on duty in the FCC's Columbia Operations Center in Columbia, MD, or at such other facility designated by the Commission by regulation or (at the time of the emergency) by public announcement only if there is a telephone outage or similar emergency in Washington, DC. The notification must be by facsimile or other recorded means delivered within 3 days of the carrier's first knowledge that the incident is fire-related, impacting 1000 or more lines for thirty or more minutes. Notification shall identify the carrier and a contact person who can provide further information, the telephone number at which the contact person can be reached, and what information is known at the time about the service outage including: the date and estimated time (local time at the location of the outage) of commencement of the outage; the geographic area affected; the estimated number of customers affected; the types of services affected (*e.g.* interexchange, local cellular); the duration of the outage, *i.e.* time elapsed from the estimated commencement of the outage until restoration of full service; the estimated number of blocked calls during the outage; the apparent or known cause of the incident, including the name and type of equipment involved and the specific part of the network affected; methods used to restore service; and the steps taken to prevent recurrences of the outage. When specifying the types of services affected by any reportable outage, carriers must indicate when 911 service

was disrupted and rerouting to alternative answering locations was not implemented. The report shall be captioned Initial Service Disruption Report. Lack of any of the above information shall not delay the filing of this report. Not later than thirty days after the outage, the carrier shall file with the Chief, Office of Engineering and Technology, a Final Service Disruption Report providing all available information on the service outage, including any information not contained in its Initial Service Disruption Report and detailing specifically the root cause of the outage and listing and evaluating the effectiveness and application in the immediate case of any best practices or industry standards identified by the Network Reliability Council to eliminate or ameliorate outages of the reported type.

(e) Any local exchange or interexchange common carrier or competitive access provider that operates transmission or switching facilities and provides access service or interstate or international telecommunications service, that experiences an outage on any facilities which it owns, operates or leases which potentially affects special offices and facilities must notify the Commission if such outage continues for 30 or more minutes regardless of the number of customers affected. Satellite carriers and cellular carriers are exempt from this reporting requirement. Notification must be served on the Commission's Duty Officer, on duty 24 hours a day in the FCC's Communications and Crisis Management Center in Washington, DC. Notification may be served on the Commission's Watch Officer on duty at the Columbia Operations Center in Columbia, MD, or at such other facility designated by the Commission by regulation or (at the time of the emergency) by public announcement only if there is a telephone outage or similar emergency in Washington, DC. The notification must be by facsimile or other record means delivered within 120 minutes of the carrier's first knowledge that the service outage potentially affects a special facility, if the outage continues for 30 or more minutes. Notification shall identify a contact person who can provide further information, the telephone number at which the contact person can be reached, and what information is known at the time about the service outage including: the date and estimated time (local time at the location of the outage) of commencement of the outage; the geographic area affected; the estimated number of customers affected; the types of services affected (*e.g.* 911 emergency services, major airports); the duration of the outage, *i.e.* time elapsed from the estimated commencement of the outage until restoration of full service; the estimated number of blocked calls during the outage; the apparent or known cause of the incident, including the name and type of equipment involved and the specific part of the network affected; methods used to restore service; and the steps taken to prevent recurrences of the outage. When specifying the types of services affected by any reportable outage, carriers must indicate when 911 service was disrupted and rerouting to alternative answering locations was not implemented. The report shall be captioned Initial Service Disruption Report. Lack of any of the above information shall not delay the filing of this report. Not later than thirty days after the outage, the carrier shall file with the Chief, Office of Engineering and Technology, a Final Service Disruption Report providing all available information on the service outage, including any information not contained in its Initial Service Disruption Report and detailing specifically the root cause of the outage and listing and evaluating the effectiveness and application in the immediate case of any best practices or industry standards identified by the Network Reliability Council to eliminate or ameliorate outages of the reported type. Under this rule, carriers are not required to report outages affecting nuclear power plants, major military installations and key government facilities to the Commission. Report at these facilities will be made according to the following procedures:

(1) When there is a mission-affecting outage, the affected facility will report the outage to the National Communications System (NCS) and call the service provider in order to determine

if the outage is expected to last 30 minutes. If the outage is not expected to, and does not, last 30 minutes, it will not be reported to the FCC. If it is expected to last 30 minutes or does last 30 minutes, the NCS, on the advice of the affected special facility, will either:

(i) Forward a report of the outage to the Commission, supplying the information for initial reports affecting special facilities specified in this section of the Commission's Rules;

(ii) Forward a report of the outage to the Commission, designating the outage as one affecting ''special facilities,'' but reporting it at a level of detail that precludes identification of the particular facility involved; or

(iii) Hold the report at the NCS due to the critical nature of the application.

(2) If there is to be a report to the Commission, a written or oral report will be given by the NCS within 120 minutes of an outage to the Commission's Duty Officer, on duty 24 hours a day in the FCC's Communications and Crisis Management Center in Washington, DC. Notification may be served on the Commission's Watch Officer on duty at the FCC's Columbia Operations Center in Columbia, MD, or at such other facility designated by the Commission by regulation or (at the time of the emergency) by public announcement only if there is a telephone outage or similar emergency in Washington, DC. If the report is oral, it is to be followed by a written report the next business day. Those carriers whose service failures are in any way responsible for the outage must consult with NCS upon its request for information.

(3) If there is to be a report to the Commission, the service provider will provide a written report to the NCS, supplying the information for final reports for special facilities required by this section of the Commission's rules. The service provider's final report to the NCS will be filed within 28 days after the outage, allowing the NCS to then file the report with the Commission within 30 days after the outage. If the outage is reportable as described in paragraph (e)(2) of this section, and the NCS determines that the final report can be presented to the Commission without jeopardizing matters of national security or emergency preparedness, the NCS will forward the report as provided in either paragraphs (e)(1)(i) or (e)(1)(ii) of this section to the Commission.

(f) If an outage is determined to have affected a 911 facility so as to be reportable as a special facilities outage, the carrier whose duty it is to report the outage to the FCC shall as soon as possible by telephone or other electronic means notify any official who has been designated by the management of the affected 911 facility as the official to be contacted by the carrier in case of a telecommunications outage at that facility. The carrier shall convey all available information to the designated official that will be useful to the management of the affected facility in mitigating the affects of the outage on callers to that facility.

(g) In the case of LEC end offices, carriers will use the number of lines terminating at the office for determining whether the criteria for reporting an outage has been reached. In the case of IXC or LEC tandem facilities, carriers must, if technically possible, use real-time blocked calls to determine whether criteria for reporting an outage have been reached. Carriers must report IXC and LEC tandem outages where more than 150,000 calls are blocked during a period of 30 or more minutes for purposes of complying with the required 50,000 potentially affected customers threshold and must report such outages where more than 90,000 calls are blocked during a period of 30 or more minutes for purposes of complying with the 30,000 potentially affected customers threshold. Carriers may use historical data to estimate blocked calls when required real-time blocked call counts are not possible. When using historical data, carriers must report incidents where more than 50,000 calls are blocked during a period of 30 or more minutes for purposes of complying with the required 50,000 potentially affected customers threshold and must report incidents where more than 30,000 calls are blocked during a period of 30 or more minutes for purposes of complying with the 30,000 potentially affected customers threshold.

(h)(1) Any local exchange or interexchange common carrier or competitive access provider that operates transmission or switching facilities and provides access services or interstate or international telecommunications services, the experiences an outage on any facilities that it owns, operates or leases that potentially affects 911 services must notify the Commission within the applicable period shown in the chart in this paragraph (h)(1) if such outage meets one of the following conditions, as defined in paragraph (a)(4) of this section:

| Condition | Lines affected | Duration | Period |
|---|---|---|---|
| Loss of E911 Tandem capability | No limit | 30 minutes or more | 120 minutes. |
| Isolation of PSAP(s) | Under 30,000 access lines served | 24 hours or more | 120 minutes. |
| Isolation of PSAP(s) | 50,000 or more access lines served | 30 minutes or more | 120 minutes. |
| Isolation of PSAP(s) | 30,000 to 50,000 access lines served | 30 minutes or more | 3 days. |
| Isolation of EO switch, host/remotes from 911. | 50,000 or more access lines served | 30 minutes or more | 120 minutes. |
| Isolation of EO switch, host/remotes from 911. | 30,000 to 50,000 access lines served | 30 minutes or more | 3 days. |

(2) Satellite carriers and cellular carriers are exempted from the reporting requirement in this paragraph (h). Notification must be served on the Commission's Duty Officer, on duty 24 hours a day in the FCC's Communicaitons and Crisis Management Center in Washington, DC. Notification may be erved on the Commission's Watch Officer on duty at the Columbia Operations Center in COlumbia, MD, or at such other facility designated by the Commission by regulation or (at the time of thee emergency) by public announcement only if there is a telephone outage or similar emergency in Washington, DC. The notification must be by facsimile or other record means delivered within the notification period indicated above from the time of the carrier's first knowledge that the service outage ''potentially affects a 911 special facility'' as described in paragraph (a)(4) of this section and summarized in the chart in paragraph (h)(1) of this section and the service outage has continued for the duration indicated in paragraph (a)(4) of this section and summarized in the chart in paragraph (h)(1) of this section. Notification shall identify a contact person who can provide further information, the telephone number at which the contact person can be reached, and the information known at the time notification is made about the service outage including: the date and estimated time (local time at the location of the outage) of commencement of the outage; the geographic area affected; the estimated number of customers affected; the types of services affected; the duration of the outage, *i.e.* time elapsed from the estimated commencement of the outage until restoration of full service; the estimated number of blocked calls during the outage; the apparent or known cause of the incident, including the name and type of equipment involved and the specific part of the network affected; methods used to restore service; and the steps taken to prevent recurrences of the outage. The report shall be captioned Initial Service Disruption Report. Lack of any of the information in this paragraph (h)(2) shall not delay the filing of this report. Not later than thirty days after the outage, the carrier shall file with the Chief, Office of Engineering and Technology, a Final Service Disruption Report providing all available information on the service outage, including any information not contained in its Initial Service Disruption Report and detailing specifically the root cause of the outage and listing and evaluating the effectiveness and application in the immediate case of any best practices or industry standards identified by the Network Reliability Council to eliminate or ameliorate outages of the reported type.

[59 FR 40266, Aug. 8, 1994, as amended at 60 FR 57196, Nov. 14, 1995; 62 FR 39452, July 23, 1997; 63 FR 37499, July 13, 1998]

CONTENTS OF APPLICATIONS; EXAMPLES

### § 63.500 Contents of applications to dismantle or remove a trunk line.

The application shall contain:

(a) The name and address of each applicant;

(b) The name, title, and post office address of the officer to whom correspondence concerning the application is to be addressed;

(c) Nature of proposed discontinuance, reduction, or impairment;

(d) Identification of community or part of community involved and date on which applicant desires to make proposed discontinuance, reduction, or impairment effective; if for a temporary period only, indicate the approximate period for which authorization is desired;

(e) Proposed new tariff listing, if any, and difference, if any, between present charges to the public and charges for the service to be substituted;

(f) Description of the service area affected including population and general character of business of the community;

(g) Name of any other carrier or carriers providing telegraph or telephone service to the community;

(h) Statement of the reasons for proposed discontinuance, reduction, or impairment;

(i) Statement of the factors showing that neither present nor future public convenience and necessity would be adversely affected by the granting of the application;

(j) Description of any previous discontinuance, reduction, or impairment of service to the community affected by the application, which has been made by the applicant during the 12 months preceding filing of application, and statement of any present plans for future discontinuance, reduction, or impairment of service to such community;

(k) A map or sketch showing:

(1) Routes of line proposed to be removed from service and of alternate lines, if any, to be retained;

(2) Type and ownership of structures (open wire, aerial cable, underground cable, carrier systems, etc.);

(3) Cities and towns along routes with approximate population of each, and route kilometers between the principal points;

(4) Location of important operating centers and repeater or relay points;

(5) State boundary lines through which the facilities extend;

(l) A wire chart showing, for both the line proposed to be removed and the alternate lines to be retained, the regular and normal assignment of each wire, its method of operation, the number of channels and normal assignment of each;

(m) The number of wires or cables to be removed and the kind, size, and length of each;

(n) A complete statement showing how the traffic load on the line proposed to be removed will be diverted to other lines and the adequacy of such other lines to handle the increased load.

[28 FR 13229, Dec. 5, 1963, as amended at 58 FR 44907, Aug. 25, 1993]

### § 63.501 Contents of applications to sever physical connection or to terminate or suspend interchange of traffic with another carrier.

The application shall contain:

(a) The name and address of each applicant;

(b) The name, title, and post office address of the officer to whom correspondence concerning the application is to be addressed;

(c) Nature of the proposed change;

(d) Identification of community or part of community involved and date on which applicant desires to make proposed discontinuance, reduction, or impairment effective; if for a temporary period only, indicate the approximate period for which authorization is desired;

(e) Proposed new tariff listing, if any, and differences, if any, between present charges to the public and charges for the service to be substituted;

(f) Description of the service area affected including population and general character of business of the community;

(g) Name of any other carrier or carriers providing telegraph or telephone service to the community;

(h) Statement of the reasons for proposed discontinuance, reduction, or impairment;

(i) Statement of the factors showing that neither present nor future public convenience and necessity would be adversely affected by the granting of the application;

(j) Description of any previous discontinuance, reduction, or impairment of service to the community affected by the application, which has been made by the applicant during the 12 months preceding filing of application, and statement of any present plans for future discontinuance, reduction, or impairment of service to such community;

(k) Name of other carrier;

(l) Points served through such physical connection or interchange;

(m) Description of the service involved;

(n) Statement as to how points served by means of such physical connection or interchange will be served thereafter;

(o) Amount of traffic interchanged for each month during preceding 6-month period;

(p) Statement as to whether severance of physical connection or termination or suspension of interchange of traffic is being made with consent of other carrier.

**§ 63.504 Contents of applications to close a public toll station where no other such toll station of the applicant in the community will continue service and where telephone toll service is not otherwise available to the public through a telephone exchange connected with the toll lines of a carrier.**

The application shall contain:

(a) The name and address of each applicant;

(b) The name, title, and post office address of the officer to whom correspondence concerning the application is to be addressed;

(c) Nature of proposed discontinuance, reduction, or impairment;

(d) Identification of community or part of community involved and date on which applicant desires to make proposed discontinuance, reduction, or impairment effective; if for a temporary period only, indicate the approximate period for which authorization is desired;

(e) Proposed new tariff listing, if any, and difference, if any, between present charges to the public and charges for the service to be substituted, if any;

(f) Description of the service area affected including population and general character of business of the community;

(g) Name of other carrier or carriers, if any, which will provide toll station service in the community;

(h) Statement of the reasons for proposed discontinuance, reduction, or impairment;

(i) Statement of the factors showing that neither present nor future public convenience and necessity would be adversely affected by the granting of the application;

(j) Description of any previous discontinuance, reduction, or impairment of service to the community affected by the application, which has been made by the applicant during the 12 months preceding filing of application, and statement of any present plans for future discontinuance, reduction, or impairment of service to such community;

(k) Description of the service involved, including a statement of the number of toll telephone messages or telegraph messages sent-paid and received-collect, and the revenues from such traffic, in connection with the service proposed to be discontinued for each of the past 6 months; and, if the volume of such traffic handled in the area has decreased during recent years, the reasons therefor.

**§ 63.505 Contents of applications for any type of discontinuance, reduction, or impairment of telephone service not specifically provided for in this part.**

The application shall contain:

(a) The name and address of each applicant;

(b) The name, title, and post office address of the officer to whom correspondence concerning the application is to be addressed;

(c) Nature of proposed discontinuance, reduction, or impairment;

(d) Identification of community or part of community involved and date on which applicant desires to make proposed discontinuance, reduction or

impairment effective, if for a temporary period only, indicate the approximate period for which authorization is desired;

(e) Proposed new tariff listing, if any, and difference, if any, between present charges to the public and charges for the service to be substituted;

(f) Description of the service area affected including population and general character of business of the community;

(g) Name of any other carrier or carriers providing telephone service to the community;

(h) Statement of the reasons for proposed discontinuance, reduction, or impairment;

(i) Statement of the factors showing that neither present nor future public convenience and necessity would be adversely affected by the granting of the application;

(j) Description of any previous discontinuance, reduction, or impairment of service to the community affected by the application, which has been made by the applicant during the 12 months preceding filing of application, and statement of any present plans for future discontinuance, reduction, or impairment of service to such community;

(k) Description of the service involved, including:

(1) Existing telephone service by the applicant available to the community or part thereof involved;

(2) Telephone service (available from applicant or others) which would remain in the community or part thereof involved in the event the application is granted;

(l) A statement of the number of toll messages sent-paid and received-collect and the revenues from such traffic in connection with the service proposed to be discontinued, reduced, or impaired for each of the past 6 months; and, if the volume of such traffic handled in the area has decreased during recent years, the reasons therefor.

[45 FR 6586, Jan. 29, 1980]

### § 63.601 Contents of applications for authority to reduce the hours of service of public coast stations under the conditions specified in § 63.70.

F.C.C. File No. T–D——

Month ——— Year ———

(Name of applicant)

(Address of applicant)

In the matter of Proposed Reduction in Hours of Service of a Public Coast Station Pursuant to § 63.70 of the Commission's rules.

Data regarding public coast station

(Call and address)

Present hours:
Monday through Friday
Saturday
Sunday
Proposed hours:
Monday through Friday
Saturday
Sunday
Proposed effective time and date of change

Average number of messages handled for month of ————, 19—

during total hours to be deleted

during maximum hour to be deleted

Data regarding substitute service to be provided by other public coast stations available and capable of providing service to the community affected, or in the marine area served by the public coast station involved:

| Station call and location | Operated by | Hours of service | | |
|---|---|---|---|---|
| | | Monday thru Friday | Saturday | Sunday |
| | | | | |

## REQUEST FOR DESIGNATION AS A RECOGNIZED PRIVATE OPERATING AGENCY

### § 63.701 Contents of application.

Except as otherwise provided in this part, any party requesting designation as a recognized private operating agency within the meaning of the International Telecommunication Convention shall request such designation by

filing an original and two copies of an application stating the nature of the services to be provided and a statement in the applicant's own words but which makes clear that the applicant is aware that it is obligated under Article 44 of the Convention to obey the mandatory provisions thereof, and all regulations promulgated thereunder, and a pledge that it will engage in no conduct or operations which otherwise obey the Convention and regulations in all respects. The applicant should also include a statement that it is aware that failure to comply will result in an order from the Federal Communications Commission to cease and desist from future violations of an ITU regulation and may result in revocation of its recognized private operating agency status by the United States Department of State. Such statement must include the following information where applicable:

(a) The name and address of each applicant;

(b) The Government, State, or Territory under the laws of which each corporate applicant is organized;

(c) The name, title and post office address of the officer of a corporate applicant, or representative of a non-corporate applicant, to whom correspondence concerning the application is to be addressed;

(d) A statement of the ownership of a non-corporate applicant, or the ownership of the stock of a corporate applicant, including an indication whether the applicant or its stock is owned directly or indirectly by an alien;

(e) A copy of each corporate applicant's articant's articles of incorporation (or its equivalent) and of its corporate bylaws;

(f) A statement whether the applicant is a carrier subject to section 214 of the Communications Act, an operator of broadcast or other radio facilities, licensed under title III of the Act, capable of causing harmful interference with the radio transmissions of other countries, or a non-carrier provider of services classed as ''enhanced'' under § 64.702(a);

(g) A statement that the services for which designated as a recognized private operating agency is sought will be extended to a point outside the United States or are capable of causing harmful interference of other radio transmission and a statement of the nature of the services to be provided;

(h) A statement setting forth the points between which the services are to be provided; and

(i) A statement as to whether covered services are provided by facilities owned by the applicant, by facilities leased from another entity, or other arrangement and a description of the arrangement.

[51 FR 18448, May 20, 1986]

### § 63.702 Form.

Application under § 63.701 shall be submitted in the form specified in § 63.53 for applications under section 214 of the Communications Act.

[51 FR 18448, May 20, 1986]

# PART 64—MISCELLANEOUS RULES RELATING TO COMMON CARRIERS

## Subpart A—Traffic Damage Claims

Sec.
64.1 Traffic damage claims.

## Subpart B—Restrictions on Indecent Telephone Message Services

64.201 Restrictions on indecent telephone message services.

## Subpart C—Furnishing of Facilities to Foreign Governments for International Communications

64.301 Furnishing of facilities to foreign governments for international communications.

## Subpart D—Procedures for Handling Priority Services in Emergencies

64.401 Policies and procedures for provisioning and restoring certain telecommunications services in emergencies.
64.402 Policies and procedures for the provision of priority access service by commercial mobile radio service providers.

## Subpart E—Use of Recording Devices by Telephone Companies

64.501 Recording of telephone conversations with telephone companies.

## Subpart F—Telecommunications Relay Services and Related Customer Premises Equipment for Persons With Disabilities

64.601 Definitions.
64.602 Jurisdiction.
64.603 Provision of services.
64.604 Mandatory minimum standards.
64.605 State certification.
64.606 Furnishing related customer premises equipment.
64.607 Provision of hearing aid compatible telephones by exchange carriers.
64.608 Enforcement of related customer premises equipment rules.

## Subpart G—Furnishing of Enhanced Services and Customer-Premises Equipment by Communications Common Carriers; Telephone Operator Services

64.702 Furnishing of enhanced services and customer-premises equipment.
64.703 Consumer information.
64.704 Call blocking prohibited.
64.705 Restrictions on charges related to the provision of operator services.
64.706 Minimum standards for the routing and handling of emergency telephone calls.
64.707 Public dissemination of information by providers of operator services.
64.708 Definitions.
64.709 Informational tariffs.
64.710 Operator services for prison inmate phones.

## Subpart H—Extension of Unsecured Credit for Interstate and Foreign Communications Services to Candidates for Federal Office

64.801 Purpose.
64.802 Applicability.
64.803 Definitions.
64.804 Rules governing the extension of unsecured credit to candidates or persons on behalf of such candidates for Federal office for interstate and foreign common carrier communication services.

## Subpart I—Allocation of Costs

64.901 Allocation of costs.
64.902 Transactions with affiliates.
64.903 Cost allocation manuals.
64.904 Independent audits.

## Subpart J—International Settlements Policy and Modification Requests

64.1001 International settlements policy and modification requests.

## Subpart K—Changing Long Distance Service

64.1100 Definitions.
64.1110 State notification of election to administer FCC rules.
64.1120 Verification of orders for telecommunications service.
64.1130 Letter of agency form and content.
64.1140 Carrier liability for slamming.
64.1150 Procedures for resolution of unauthorized changes in preferred carrier.
64.1160 Absolution procedures where the subscriber has not paid charges.
64.1170 Reimbursement procedures where the subscriber has paid charges.
64.1180 [Reserved]

## Subpart L—Restrictions on Telephone Solicitation

64.1200 Delivery restrictions.
64.1201 Restrictions on billing name and address disclosure.

## Subpart M—Provision of Payphone Service

64.1300 Payphone compensation obligation.
64,1310 Payphone compensation procedures.
64.1320 Payphone compensation verification and reports.
64.1330 State review of payphone entry and exit regulations and public interest payphones.
64.1340 Right to negotiate.

## Subpart N—Expanded Interconnection

64.1401 Expanded interconnection.
64.1402 Rights and responsibilities of interconnectors.

## Subpart O—Interstate Pay-Per-Call and Other Information Services

64.1501 Definitions.
64.1502 Limitations on the provision of pay-per-call services.
64.1503 Termination of pay-per-call and other information programs.
64.1504 Restrictions on the use of toll-free numbers.
64.1505 Restrictions on collect telephone calls.
64.1506 Number designation.
64.1507 Prohibition on disconnection or interruption of service for failure to remit pay-per-call and similar service charges.
64.1508 Blocking access to 900 service.
64.1509 Disclosure and dissemination of pay-per-call information.
64.1510 Billing and collection of pay-per-call and similar service charges.
64.1511 Forgiveness of charges and refunds.
64.1512 Involuntary blocking of pay-per-call services.
64.1513 Verification of charitable status.

64.1514 Generation of signalling tones.
64.1515 Recovery of costs.

## Subpart P—Calling Party Telephone Number; Privacy

64.1600 Definitions.
64.1601 Delivery requirements and privacy restrictions.
64.1602 Restrictions on use and sale of telephone subscriber information provided pursuant to automatic number identification or charge number services.
64.1603 Customer notification.
64.1604 Effective date.

## Subpart Q—Implementation of Section 273(d)(5) of the Communications Act: Dispute Resolution Regarding Equipment Standards

64.1700 Purpose and scope.
64.1701 Definitions.
64.1702 Procedures.
64.1703 Dispute resolution default process.
64.1704 Frivolous disputes/penalties.

## Subpart R—Geographic Rate Averaging and Rate Integration

64.1801 Geographic rate averaging and rate integration.

## Subpart S—Nondominant Interexchange Carrier Certifications Regarding Geographic Rate Averaging and Rate Integration Requirements

64.1900 Nondominant interexchange carrier certifications regarding geographic rate averaging and rate integration requirements.

## Subpart T—Separate Affiliate Requirements for Incumbent Independent Local Exchange Carriers That Provide In-Region, Interstate Domestic Interexchange Services or In-Region International Interexchange Services

64.1901 Basis and purpose.
64.1902 Terms and definitions.
64.1903 Obligations of all incumbent independent local exchange carriers.

## Subpart U—Customer Proprietary Network Information

64.2001 Basis and purpose.
64.2003 Definitions.
64.2005 Use of customer proprietary network information without customer approval.
64.2007 Notice and approval required for use of customer proprietary network information.
64.2009 Safeguards required for use of customer proprietary network information.

## Subpart V—Telecommunications Carrier Systems Security and Integrity Pursuant to the Communications Assistance for Law Enforcement Act (CALEA)

64.2102 Definitions.
64.2103 Policies and procedures for employee supervision and control.
64.2104 Maintaining secure and accurate records.
64.2105 Submission of policies and procedures and commission review.
64.2106 Penalties.

## Subpart W—Required New Capabilities Pursuant to the Communications Assistance for Law Enforcement Act (CALEA)

64.2200 Purpose.
64.2201 Scope.
64.2202 Definitions.
64.2203 Capabilities that must be provided by a wireline telecommunications carrier.

## Subpart X—Subscriber List Information

64.2301 Basis and purpose.
64.2305 Definitions.
64.2309 Provision of subscriber list information.
64.2313 Timely basis.
64.2317 Unbundled basis.
64.2321 Nondiscriminatory rates, terms, and conditions.
64.2325 Reasonable rates, terms, and conditions.
64.2329 Format.
64.2333 Burden of proof.
64.2337 Directory publishing purposes.
64.2341 Record keeping.
64.2345 Primary advertising classification.

## Subpart Y—Truth-in-Billing Requirements for Common Carriers

64.2400 Purpose.
64.2401 Scope.

APPENDIX A TO PART 64—TELECOMMUNICATIONS SERVICE PRIORITY (TSP) SYSTEM FOR NATIONAL SECURITY EMERGENCY PREPAREDNESS (NSEP)

APPENDIX B TO PART 64—PRIORITY ACCESS SERVICE (PAS) FOR NATIONAL SECURITY AND EMERGENCY PREPAREDNESS (NSEP)

AUTHORITY: 47 U.S.C. 154, 47 U.S.C. 225, 47 U.S.C. 251(e)(1).151, 154, 201, 202, 205, 218–220, 254, 302, 303, and 337 unless otherwise noted. Interpret or apply sections 201, 218, 225, 226, 227, 229, 332, 48 Stat. 1070, as amended. 47 U.S.C. 201–204, 208, 225, 226, 227, 229, 332, 501 and 503 unless otherwise noted.

SOURCE: 28 FR 13239, Dec. 5, 1963, unless otherwise noted.

## Subpart A—Traffic Damage Claims

### § 64.1 Traffic damage claims.

(a) Each carrier engaged in furnishing radio-telegraph, wire-telegraph, or ocean-cable service shall maintain separate files for each damage claim of a traffic nature filed with the carrier, showing the name, address, and nature of business of the claimant, the basis for the claim, disposition made, and all correspondence, reports, and records pertaining thereto. Such files shall be preserved in accordance with existing rules of the Commission (part 42 of this chapter) and at points (one or more) to be specifically designated by each carrier.

(b) The aforementioned carriers shall make no payment as a result of any traffic damage claim if the amount of the payment would be in excess of the total amount collected by the carrier on the message or messages from which the claim arose unless such claim be presented to the carrier in writing signed by the claimant and setting forth the reason for the claim.

## Subpart B—Restrictions on Indecent Telephone Message Services

### § 64.201 Restrictions on indecent telephone message services.

(a) It is a defense to prosecution for the provision of indecent communications under section 223(b)(2) of the Communications Act of 1934, as amended (the Act), 47 U.S.C. 223(b)(2), that the defendant has taken the action set forth in paragraph (a)(1) of this section and, in addition, has complied with the following: Taken one of the actions set forth in paragraphs (a)(2), (3), or (4) of this section to restrict access to prohibited communications to persons eighteen years of age or older, and has additionally complied with paragraph (a)(5) of this section, where applicable:

(1) Has notified the common carrier identified in section 223(c)(1) of the Act, in writing, that he or she is providing the kind of service described in section 223(b)(2) of the Act.

(2) Requires payment by credit card before transmission of the message; or

(3) Requires an authorized access or identification code before transmission of the message, and where the defendant has:

(i) Issued the code by mailing it to the applicant after reasonably ascertaining through receipt of a written application that the applicant is not under eighteen years of age; and

(ii) Established a procedure to cancel immediately the code of any person upon written, telephonic or other notice to the defendant's business office that such code has been lost, stolen, or used by a person or persons under the age of eighteen, or that such code is no longer desired; or

(4) Scrambles the message using any technique that renders the audio unintelligible and incomprehensible to the calling party unless that party uses a descrambler; and,

(5) Where the defendant is a message sponsor subscriber to mass announcement services tariffed at this Commission and such defendant prior to the transmission of the message has requested in writing to the carrier providing the public announcement service that calls to this message service be subject to billing notification as an adult telephone message service.

(b) A common carrier within the District of Columbia or within any State, or in interstate or foreign commerce, shall not, to the extent technically feasible, provide access to a communication described in section 223(b) of the Act from the telephone of any subscriber who has not previously requested in writing the carrier to provide access to such communication if the carrier collects from subscribers an identifiable charge for such communication that the carrier remits, in whole or in part, to the provider of such communication.

[52 FR 17761, May 12, 1987, as amended at 55 FR 28916, July 16, 1990]

## Subpart C—Furnishing of Facilities to Foreign Governments for International Communications

### § 64.301 Furnishing of facilities to foreign governments for international communications.

Common carriers by wire and radio shall, in accordance with section 201 of the Communications Act, furnish services and facilities for communications to any foreign government upon reasonable demand therefor: *Provided, however,* That, if a foreign government fails or refuses, upon reasonable demand, to furnish particular services and facilities to the United States Government for communications between the territory of that government and the United States or any other point, such carriers shall, to the extent specifically ordered by the Commission, deny equivalent services or facilities in the United States to such foreign government for communications between the United States and the territory of that foreign government or any other point.

(Secs. 201, 214, 303, 308, 48 Stat. 1075, 1082, 1085; 47 U.S.C. 201, 214, 303, 308)

[28 FR 13242, Dec. 5, 1963]

## Subpart D—Procedures for Handling Priority Services in Emergencies

### § 64.401 Policies and procedures for provisioning and restoring certain telecommunications services in emergencies.

The communications common carrier shall maintain and provision and, if disrupted, restore facilities and services in accordance with policies and procedures set forth in Appendix A to this part.

[65 FR 48396, Aug. 8, 2000]

EFFECTIVE DATE NOTE: At 65 FR 48396, Aug. 8, 2000, § 64.401 was revised, effective Oct. 10, 2000. For the convenience of the user, the superseded text is set forth as follows.

### § 64.401 Policies and procedures for provisioning and restoring certain telecommunications services in emergencies.

The communications common carrier shall maintain and provision and, if disrupted, restore facilities and services in accordance with policies and procedures set forth in the appendix to this part.

### § 64.402 Policies and procedures for the provision of priority access service by commercial mobile radio service providers.

Commercial mobile radio service providers that elect to provide priority access service to National Security and Emergency Preparedness personnel shall provide priority access service in accordance with the policies and procedures set forth in Appendix B to this part.

[65 FR 48396, Aug. 8, 2000]

EFFECTIVE DATE NOTE: At 65 FR 48396, Aug. 8, 2000, § 64.402 was added, effective Oct. 10, 2000.

## Subpart E—Use of Recording Devices by Telephone Companies

### § 64.501 Recording of telephone conversations with telephone companies.

No telephone common carrier, subject in whole or in part to the Communications Act of 1934, as amended, may use any recording device in connection with any interstate or foreign telephone conversation between any member of the public, on the one hand, and any officer, agent or other person acting for or employed by any such telephone common carrier, on the other hand, except under the following conditions:

(a) Where such use shall be preceded by verbal or written consent of all parties to the telephone conversation, or

(b) Where such use shall be preceded by verbal notification which is recorded at the beginning, and as part of the call, by the recording party, or

(c) Where such use shall be accompanied by an automatic tone warning device, which will automatically produce a distinct signal that is repeated at regular intervals during the course of the telephone conversation when the recording device is in use. *Provided That:*

(1) The characteristics of the warning tone shall be the same as those specified in the Orders of this Commission adopted by it in ''Use of Recording Devices in Connection With Telephone Service,'' Docket 6787, 11 FCC 1033

(1947); 12 FCC 1005 (November 26, 1947); 12 FCC 1008 (May 20, 1948).

(d) That the characteristics of the warning tone shall be the same as those specified in the Orders of this Commission adopted by it in ''Use of Recording Devices in Connection With Telephone Service,'' Docket 6787; 11 F.C.C. 1033 (1947); 12 F.C.C. 1005 (November 26, 1947); 12 F.C.C. 1008 (May 20, 1948);

(e) That no recording device shall be used unless it can be physically connected to and disconnected from the telephone line or switched on and off.

(Secs. 2, 3, 4, 5, 301, 303, 307, 308, 309, 315, 317; 48 Stat., as amended, 1064, 1065, 1066, 1068, 1081, 1082, 1083, 1084, 1085, 1089; 47 U.S.C. 152, 153, 154, 155, 301, 303, 307, 308, 309, 315, 317)

[32 FR 11275, Aug. 3, 1967, as amended at 46 FR 29480, June 2, 1981; 52 FR 3654, Feb. 5, 1987]

## Subpart F—Telecommunications Relay Services and Related Customer Premises Equipment for Persons With Disabilities

SOURCE: 56 FR 36731, Aug. 1, 1991, unless otherwise noted.

### § 64.601 Definitions.

As used in this subpart, the following definitions apply:

(1) *American Sign Language (ASL).* A visual language based on hand shape, position, movement, and orientation of the hands in relation to each other and the body.

(2) *ASCII.* An acronym for American Standard Code for Information Interexchange which employs an eight bit code and can operate at any standard transmission baud rate including 300, 1200, 2400, and higher.

(3) *Baudot.* A seven bit code, only five of which are information bits. Baudot is used by some text telephones to communicate with each other at a 45.5 baud rate.

(4) *Common carrier or carrier.* Any common carrier engaged in interstate Communication by wire or radio as defined in section 3(h) of the Communications Act of 1934, as amended (the Act), and any common carrier engaged in intrastate communication by wire or radio, notwithstanding sections 2(b) and 221(b) of the Act.

(5) *Communications assistant (CA).* A person who transliterates or interprets conversation between two end users of TRS. CA supersedes the term ''TDD operator.''

(6) *Hearing carry over (HCO).* A reduced form of TRS where the person with the speech disability is able to listen to the other end user and, in reply, the CA speaks the text as typed by the person with the speech disability. The CA does not type any conversation.

(7) *Telecommunications relay services (TRS).* Telephone transmission services that provide the ability for an individual who has a hearing or speech disability to engage in communication by wire or radio with a hearing individual in a manner that is functionally equivalent to the ability of an individual who does not have a hearing or speech disability to communicate using voice communication services by wire or radio. Such term includes services that enable two-way communication between an individual who uses a text telephone or other nonvoice terminal device and an individual who does not use such a device, speech-to-speech services, video relay services and non-English relay services. TRS supersedes the terms ''dual party relay system,'' ''message relay services,'' and ''TDD Relay.''

(8) *Text telephone (TTY).* A machine that employs graphic communication in the transmission of coded signals through a wire or radio communication system. TTY supersedes the term ''TDD'' or ''telecommunications device for the deaf,'' and TT.

(9) *Voice carry over (VCO).* A reduced form of TRS where the person with the hearing disability is able to speak directly to the other end user. The CA types the response back to the person with the hearing disabty. The CA does not voice the conversation.

(10) *Speech-to-speech relay service (STS).* A telecommunications relay service that allows people with speech disabilities to communicate with voice telephone users through the use of specially trained CAs who understand the speech patterns of persons with disabilities and can repeat the words spoken by that person.

(11) *Video relay service (VRS).* A telecommunications relay service that allows people with hearing or speech disabilities who use sign language to communicate with voice telephone users through video equipment. The video link allows the CA to view and interpret the party's signed conversation and relay the conversation back and forth with a voice caller.

(12) *Non-English language relay service.* A telecommunications relay service that allows persons with hearing or speech disabilities who use languages other than English to communicate with voice telephone users in a shared language other than English, through a CA who is fluent in that language.

(13) *Qualified interpreter.* An interpreter who is able to interpret effectively, accurately, and impartially, both receptively and expressively, using any necessary specialized vocabulary.

[65 FR 38435, June 21, 2000, as amended at 65 FR 54804, Sept. 11, 2000]

EFFECTIVE DATE NOTE: At 65 FR 38435, June 21, 2000, § 64.601 was revised, effective Dec. 18, 2000. At 65 FR 54804, Sept. 11, 2000, § 64.601 was amended by redesignating paragraphs (1) through (9) as (2) through (10) respectively, and by adding a new paragraph (1), effective Oct. 11, 2000 through Dec. 18, 2000. For the convenience of the user, the superseded text is set forth as follows.

### § 64.601 Definitions.

As used in this subpart, the following definitions apply:

(1) *711.* The abbreviated dialing code for accessing all types of relay services anywhere in the United States.

(2) *American Sign Language (ASL).* A visual language based on hand shape, position, movement, and orientation of the hands in relation to each other and the body.

(3) *ASCII.* An acronym for American Standard Code for Information Interexchange which employs an eight bit code and can operate at any standard transmission baud rate including 300, 1200, 2400, and higher.

(4) *Baudot.* A seven bit code, only five of which are information bits. Baudot is used by some text telephones to communicate with each other at a 45.5 baud rate.

(5) *Common carrier or carrier.* Any common carrier engaged in interstate communication by wire or radio as defined in section 3(h) of the Communications Act of 1934, as amended (the Act), and any common carrier engaged in intrastate communication by wire or radio, notwithstanding sections 2(b) and 221(b) of the Act.

(6) *Communications assistant (CA).* A person who transliterates conversation from text to voice and from voice to text between two end users of TRS. CA supersedes the term ''TDD operator.''

(7) *Hearing carry over (HCO).* A reduced form of TRS where the person with the speech disability is able to listen to the other end user and, in reply, the CA speaks the text as typed by the person with the speech disability. The CA does not type any conversation.

(8) *Telecommunications relay services (TRS).* Telephone transmission services that provide the ability for an individual who has a hearing or speech disability to engage in communication by wire or radio with a hearing individual in a manner that is functionally equivalent to the ability of an individual who does not have a hearing or speech disability to communicate using voice communication services by wire or radio. Such term includes services that enable two-way communication between an individual who uses a text telephone or other nonvoice terminal device and an individual who does not use such a device. TRS supersedes the terms ''dual party relay system,'' ''message relay services,'' and ''TDD Relay.''

(9) *Text telephone (TT).* A machine that employs graphic communication in the transmission of coded signals through a wire or radio communication system. TT supersedes the term ''TDD'' or ''telecommunications device for the deaf.''

(10) *Voice carry over (VCO).* A reduced form of TRS where the person with the hearing disability is able to speak directly to the other end user. The CA types the response back to the person with the hearing disability. The CA does not voice the conversation.

### § 64.602 Jurisdiction.

Any violation of this subpart F by any common carrier engaged in intrastate communication shall be subject to the same remedies, penalties, and procedures as are applicable to a violation of the Act by a common carrier engaged in interstate communication.

[65 FR 38436, June 21, 2000]

EFFECTIVE DATE NOTE: At 65 FR 38436, June 21, 2000, § 64.602 was revised, effective Dec. 18, 2000. For the convenience of the user, the superseded text is set forth as follows.

### § 64.602 Jurisdiction.

Any violation of this subpart by any common carrier engaged in intrastate communication shall be subject to the same remedies, penalties, and procedures as are applicable to a violation of the Act by a common

carrier engaged in interstate communication.

### § 64.603 Provision of services.

Each common carrier providing telephone voice transmission services shall provide, not later than July 26, 1993, in compliance with the regulations prescribed herein, throughout the area in which it offers services, telecommunications relay services, individually, through designees, through a competitively selected vendor, or in concert with other carriers. Speech-to-speech relay service and interstate Spanish language relay service shall be provided by March 1, 2001. A common carrier shall be considered to be in compliance with these regulations:

(a) With respect to intrastate telecommunications relay services in any state that does not have a certified program under § 64.605 and with respect to interstate telecommunications relay services, if such common carrier (or other entity through which the carrier is providing such relay services) is in compliance with § 64.604; or

(b) With respect to intrastate telecommunications relay services in any state that has a certified program under § 64.605 for such state, if such common carrier (or other entity through which the carrier is providing such relay services) is in compliance with the program certified under § 64.605 for such state.

[65 FR 38436, June 21, 2000, as amended at 65 FR 54804, Sept. 11, 2000]

EFFECTIVE DATE NOTE: At 65 FR 38436, June 21, 2000, § 64.603 was revised, effective Dec. 18, 2000. For the convenience of the user, the superseded text is set out as follows.

**§ 64.603 Provision of services.**

Each common carrier providing telephone voice transmission services shall provide, not later than July 26, 1993, in compliance with the regulations prescribed herein, throughout the area in which it offers services, telecommunications relay services, individually, through designees, through a competitively selected vendor, or in concert with other carriers. A common carrier shall be considered to be in compliance with these regulations:

(a) With respect to intrastate telecommunications relay services in any state that does not have a certified program under § 64.605 and with respect to interstate telecommunications relay services, if such common carrier (or other entity through which the carrier is providing such relay services) is in compliance with § 64.604; or

(b) With respect to intrastate telecommunications relay services in any state that has a certified program under § 64.605 for such state, if such common carrier (or other entity through which the carrier is providing such relay services) is in compliance with the program certified under § 64.605 for such state.

EFFECTIVE DATE NOTE: At 65 FR 54804, Sept. 11, 2000, § 64.603 was amended by revising the undesignated introductory text, effective Oct. 11, 2000. For the convenience of the user, the text in effect from October 11, 2000 to Dec. 18, 2000 is set forth as follows.

**§ 64.603 Provision of services.**

Each common carrier providing telephone voice transmission services shall provide, not later than July 26, 1993, in compliance with the regulations prescribed herein, throughout the area in which it offers services, telecommunications relay services, individually, through designees, through a competitively selected vendor, or in concert with other carriers. Speech-to-speech relay service and interstate Spanish language relay service shall be provided by March 1, 2001. In addition, each common carrier providing telephone voice transmission services shall provide, not later than October 1, 2001, access via the 711 dialing code to all relay services as a toll free call. A common carrier shall be considered to be in compliance with these regulations:

* * * * *

### § 64.604 Mandatory minimum standards.

The standards in this section are applicable December 18, 2000, except as stated in paragraphs (c)(2) and (c)(7) of this section.

(a) *Operational standards*—(1) *Communications assistant (CA).* TRS providers are responsible for requiring that CAs be sufficiently trained to effectively meet the specialized communications needs of individuals with hearing and speech disabilities; and that CAs have competent skills in typing, grammar, spelling, interpretation of typewritten ASL, and familiarity with hearing and speech disability cultures, languages and etiquette. CAs must possess clear and articulate voice communications. CAs must provide a typing speed of a minimum of 60 words per minute. Technological aids may be used to reach the required typing speed. Providers must

give oral-to-type tests of CA speed. TRS providers are responsible for requiring that VRS CAs are qualified interpreters. A ''qualified interpreter'' is able to interpret effectively, accurately, and impartially, both receptively and expressively, using any necessary specialized vocabulary.

2. *Confidentiality and conversation content.* (i) Except as authorized by section 705 of the Communications Act, 47 U.S.C. 605, CAs are prohibited from disclosing the content of any relayed conversation regardless of content, and with a limited exception for STS CAs, from keeping records of the content of any conversation beyond the duration of a call, even if to do so would be inconsistent with state or local law. STS CAs may retain information from a particular call in order to facilitate the completion of consecutive calls, at the request of the user. The caller may request the STS CA to retain such information, or the CA may ask the caller if he wants the CA to repeat the same information during subsequent calls. The CA may retain the information only for as long as it takes to complete the subsequent calls.

(ii) CAs are prohibited from intentionally altering a relayed conversation and, to the extent that it is not inconsistent with federal, state or local law regarding use of telephone company facilities for illegal purposes, must relay all conversation verbatim unless the relay user specifically requests summarization, or if the user requests interpretation of an ASL call. An STS CA may facilitate the call of an STS user with a speech disability so long as the CA does not interfere with the independence of the user, the user maintains control of the conversation, and the user does not object. Appropriate measures must be taken by relay providers to ensure that confidentiality of VRS users is maintained.

(3) *Types of calls.* Consistent with the obligations of common carrier operators, CAs are prohibited from refusing single or sequential calls or limiting the length of calls utilizing relay services. TRS shall be capable of handling any type of call normally provided by common carriers and the burden of proving the infeasibility of handling any type of call will be placed on the carriers. Providers of TRS are permitted to decline to complete a call because credit authorization is denied.

(4) *Handling of emergency calls.* Providers must use a system for incoming emergency calls that, at a minimum, automatically and immediately transfers the caller to the nearest Public Safety Answering Point (PSAP). In addition, a CA must pass along the caller's telephone number to the PSAP when a caller disconnects before being connected to emergency services.

(5) *In-call replacement of CAs.* CAs answering and placing a TTY-based TRS or VRS call must stay with the call for a minimum of ten minutes. CAs answering and placing an STS call must stay with the call for a minimum of fifteen minutes.

(6) *CA gender preferences.* TRS providers must make best efforts to accommodate a TRS user's requested CA gender when a call is initiated and, if a transfer occurs, at the time the call is transferred to another CA.

(7) *STS called numbers.* Relay providers must offer STS users the option to maintain at the relay center a list of names and telephone numbers which the STS user calls. When the STS user requests one of these names, the CA must repeat the name and state the telephone number to the STS user. This information must be transferred to any new STS provider.

(b) *Technical standards*—(1) *ASCII and Baudot.* TRS shall be capable of communicating with ASCII and Baudot format, at any speed generally in use.

(2) *Speed of answer.* TRS shall include adequate staffing to provide callers with efficient access under projected calling volumes, so that the probability of a busy response due to CA unavailability shall be functionally equivalent to what a voice caller would experience in attempting to reach a party through the voice telephone network. TRS shall, except during network failure, answer 85% of all calls within 10 seconds by any method which results in the caller's call immediately being placed, not put in a queue or on hold. The ten seconds begins at the time the call is delivered to the TRS center's network. The call is considered delivered when the relay center's

equipment accepts the call from the local exchange carrier and the public switched network actually delivers the call to the TRS center. Abandoned calls shall be included in the speed-of-answer calculation. A provider's compliance with this rule shall be measured on a daily basis. The system shall be designed to a P.01 standard. A LEC shall provide the call attempt rates and the rates of calls blocked between the LEC and the relay center to relay administrators and relay centers upon request.

(3) *Equal access to interexchange carriers.* TRS users shall have access to their chosen interexchange carrier through the TRS, and to all other operator services, to the same extent that such access is provided to voice users.

(4) *TRS facilities.* TRS shall operate every day, 24 hours a day. TRS shall have redundancy features functionally equivalent to the equipment in normal central offices, including uninterruptible power for emergency use. TRS shall transmit conversations between TTY and voice callers in real time. Adequate network facilities shall be used in conjunction with TRS so that under projected calling volume the probability of a busy response due to loop trunk congestion shall be functionally equivalent to what a voice caller would experience in attempting to reach a party through the voice telephone network. Relay services that are not mandated by this Commission are not required to be provided every day, 24 hours a day.

(5) *Technology*. No regulation set forth in this subpart is intended to discourage or impair the development of improved technology that fosters the availability of telecommunications to person with disabilities. VCO and HCO technology are required to be standard features of TRS.

(6) *Voice mail and interactive menus.* CAs must alert the TRS user to the presence of a recorded message and interactive menu through a hot key on the CA's terminal. The hot key will send text from the CA to the consumer's TTY indicating that a recording or interactive menu has been encountered. Relay providers shall electronically capture recorded messages and retain them for the length of the call. Relay providers may not impose any charges for additional calls which must be made by the relay user in order to complete calls involving recorded or interactive messages. Relay services shall be capable of handling pay-per-call calls.

(c) *Functional standards*—(1) *Consumer complaint logs.*

(i) States and interstate providers must maintain a log of consumer complaints including all complaints about TRS in the state, whether filed with the TRS provider or the State, and must retain the log until the next application for certification is granted. The log shall include, at a minimum, the date the complaint was filed, the nature of the complaint, the date of resolution, and an explanation of the resolution.

(ii) Beginning July 1, 2002, states and TRS providers shall submit summaries of logs indicating the number of complaints received for the 12-month period ending May 31 to the Commission by July 1 of each year. Summaries of logs submitted to the Commission on July 1, 2001 shall indicate the number of complaints received from the date of OMB approval through May 31, 2001.

(2) *Contact persons*—(i) Beginning on June 30, 2000, states must submit to the Commission a contact person or office for TRS consumer information and complaints about intrastate TRS. This submission must include, at a minimum, the name and address of the state office that receives complaints, grievances, inquiries and suggestions, voice and TTY telephone numbers, fax number, e-mail address, and physical address to which correspondence should be sent.

(ii) Beginning on June 30, 2000, providers of interstate TRS and relay providers having state TRS contracts must submit to the Commission a contact person or office for TRS consumer information and complaints about the provider's service. This submission must include, at a minimum, the name and address of the office that receives complaints, grievances, inquiries and suggestions, voice and TTY telephone numbers, fax number, e-mail address, and physical address to which correspondence should be sent.

(3) *Public access to information.* Carriers, through publication in their directories, periodic billing inserts, placement of TRS instructions in telephone directories, through directory assistance services, and incorporation of TTY numbers in telephone directories, shall assure that callers in their service areas are aware of the availability and use of all forms of TRS. Efforts to educate the public about TRS should extend to all segments of the public, including individuals who are hard of hearing, speech disabled, and senior citizens as well as members of the general population. In addition, each common carrier providing telephone voice transmission services shall conduct, not later than October 1, 2001, ongoing education and outreach programs that publicize the availability of 711 access to TRS in a manner reasonably designed to reach the largest number of consumers possible.

(4) *Rates.* TRS users shall pay rates no greater than the rates paid for functionally equivalent voice communication services with respect to such factors as the duration of the call, the time of day, and the distance from the point of origination to the point of termination.

(5) *Jurisdictional separation of costs*—(i) *General.* Where appropriate, costs of providing TRS shall be separated in accordance with the jurisdictional separation procedures and standards set forth in the Commission's regulations adopted pursuant to section 410 of the Communications Act of 1934, as amended.

(ii) *Cost recovery*. Costs caused by interstate TRS shall be recovered from all subscribers for every interstate service, utilizing a shared-funding cost recovery mechanism. Except as noted in this paragraph, with respect to VRS, costs caused by intrastate TRS shall be recovered from the intrastate jurisdiction. In a state that has a certified program under § 64.605, the state agency providing TRS shall, through the state's regulatory agency, permit a common carrier to recover costs incurred in providing TRS by a method consistent with the requirements of this section. Costs caused by the provision of interstate and intrastate VRS shall be recovered from all subscribers for every interstate service, utilizing a shared-funding cost recovery mechanism.

(iii) *Telecommunications Relay Services Fund.* Effective July 26, 1993, an Interstate Cost Recovery Plan, hereinafter referred to as the TRS Fund, shall be administered by an entity selected by the Commission (administrator). The initial administrator, for an interim period, will be the National Exchange Carrier Association, Inc.

(A) *Contributions.* Every carrier providing interstate telecommunications services shall contribute to the TRS Fund on the basis of interstate end-user telecommunications revenues as described herein. Contributions shall be made by all carriers who provide interstate services, including, but not limited to, cellular telephone and paging, mobile radio, operator services, personal communications service (PCS), access (including subscriber line charges), alternative access and special access, packet-switched, WATS, 800, 900, message telephone service (MTS), private line, telex, telegraph, video, satellite, intraLATA, international and resale services.

(B) *Contribution computations.* Contributors' contribution to the TRS fund shall be the product of their subject revenues for the prior calendar year and a contribution factor determined annually by the Commission. The contribution factor shall be based on the ratio between expected TRS Fund expenses to interstate end-user telecommunications revenues. In the event that contributions exceed TRS payments and administrative costs, the contribution factor for the following year will be adjusted by an appropriate amount, taking into consideration projected cost and usage changes. In the event that contributions are inadequate, the fund administrator may request authority from the Commission to borrow funds commercially, with such debt secured by future years' contributions. Each subject carrier must contribute at least $25 per year. Carriers whose annual contributions total less than $1,200 must pay the entire contribution at the beginning of the contribution period. Service providers whose contributions total $1,200 or more may divide their contributions

into equal monthly payments. Carriers shall complete and submit, and contributions shall be based on, a ''Telecommunications Reporting Worksheet'' (as published by the Commission in the FEDERAL REGISTER). The worksheet shall be certified to by an officer of the contributor, and subject to verification by the Commission or the administrator at the discretion of the Commission. Contributors' statements in the worksheet shall be subject to the provisions of section 220 of the Communications Act of 1934, as amended. The fund administrator may bill contributors a separate assessment for reasonable administrative expenses and interest resulting from improper filing or overdue contributions. The Chief of the Common Carrier Bureau may waive, reduce, modify or eliminate contributor reporting requirements that prove unnecessary and require additional reporting requirements that the Bureau deems necessary to the sound and efficient administration of the TRS Fund.

(C) *Data collection from TRS Providers.* TRS providers shall provide the administrator with true and adequate data necessary to determine TRS fund revenue requirements and payments. TRS providers shall provide the administrator with the following: total TRS minutes of use, total interstate TRS minutes of use, total TRS operating expenses and total TRS investment in general accordance with part 32 of the Communications Act, and other historical or projected information reasonably requested by the administrator for purposes of computing payments and revenue requirements. The administrator and the Commission shall have the authority to examine, verify and audit data received from TRS providers as necessary to assure the accuracy and integrity of fund payments.

(D) The TRS Fund will be subject to a yearly audit performed by an independent certified accounting firm or the Commission, or both.

(E) *Payments to TRS Providers.* TRS Fund payments shall be distributed to TRS providers based on formulas approved or modified by the Commission. The administrator shall file schedules of payment formulas with the Commission. Such formulas shall be designed to compensate TRS providers for reasonable costs of providing interstate TRS, and shall be subject to Commission approval. Such formulas shall be based on total monthly interstate TRS minutes of use. TRS minutes of use for purposes of interstate cost recovery under the TRS Fund are defined as the minutes of use for completed interstate TRS calls placed through the TRS center beginning after call set-up and concluding after the last message call unit. In addition to the data required under paragraph (c)(5)(iii)(C) of this section, all TRS providers, including providers who are not interexchange carriers, local exchange carriers, or certified state relay providers, must submit reports of interstate TRS minutes of use to the administrator in order to receive payments. The administrator shall establish procedures to verify payment claims, and may suspend or delay payments to a TRS provider if the TRS provider fails to provide adequate verification of payment upon reasonable request, or if directed by the Commission to do so. The TRS Fund administrator shall make payments only to eligible TRS providers operating pursuant to the mandatory minimum standards as required in § 64.604, and after disbursements to the administrator for reasonable expenses incurred by it in connection with TRS Fund administration. TRS providers receiving payments shall file a form prescribed by the administrator. The administrator shall fashion a form that is consistent with parts 32 and 36 procedures reasonably tailored to meet the needs of TRS providers. The Commission shall have authority to audit providers and have access to all data, including carrier specific data, collected by the fund administrator. The fund administrator shall have authority to audit TRS providers reporting data to the administrator. The formulas should appropriately compensate interstate providers for the provision of VRS, whether intrastate or interstate.

(F) TRS providers eligible for receiving payments from the TRS Fund are:

(*1*) TRS facilities operated under contract with and/or by certified state TRS programs pursuant to § 64.605; or

(*2*) TRS facilities owned by or operated under contract with a common

carrier providing interstate services operated pursuant to § 64.604; or

(*3*) Interstate common carriers offering TRS pursuant to § 64.604.

(G) Any eligible TRS provider as defined in paragraph (c)(5)(iii)(F) of this section shall notify the administrator of its intent to participate in the TRS Fund thirty (30) days prior to submitting reports of TRS interstate minutes of use in order to receive payment settlements for interstate TRS, and failure to file may exclude the TRS provider from eligibility for the year.

(H) *Administrator reporting, monitoring, and filing requirements.* The administrator shall perform all filing and reporting functions required under paragraphs (c)(5)(iii)(A) through (J) of this section. TRS payment formulas and revenue requirements shall be filed with the Commission on May 1 of each year, to be effective for a one-year period beginning the following July 1. The administrator shall report annually to the Commission an itemization of monthly administrative costs which shall consist of all expenses, receipts, and payments associated with the administration of TRS Fund. The administrator is required to keep the TRS Fund separate from all other funds administered by the administrator, shall file a cost allocation manual (CAM), and shall provide the Commission full access to all data collected pursuant to the administration of the TRS Fund. The administrator shall establish a non-paid, voluntary advisory committee of persons from the hearing and speech disability community, TRS users (voice and text telephone), interstate service providers, state representatives, and TRS providers, which will meet at reasonable intervals (at least semi-annually) in order to monitor TRS cost recovery matters. Each group shall select its own representative to the committee. The administrator's annual report shall include a discussion of advisory committee deliberations.

(I) *Information filed with the administrator.* The administrator shall keep all data obtained from contributors and TRS providers confidential and shall not disclose such data in company-specific form unless directed to do so by the Commission. Subject to any restrictions imposed by the Chief of the Common Carrier Bureau, the TRS Fund administrator may share data obtained from carriers with the administrators of the universal support mechanisms (*See* 47 CFR 54.701 of this chapter), the North American Numbering Plan administration cost recovery (*See* 47 CFR 52.16 of this chapter), and the long-term local number portability cost recovery (*See* 47 CFR 52.32 of this chapter). The TRS Fund administrator shall keep confidential all data obtained from other administrators. The administrator shall not use such data except for purposes of administering the TRS Fund, calculating the regulatory fees of interstate common carriers, and aggregating such fee payments for submission to the Commission. The Commission shall have access to all data reported to the administrator, and authority to audit TRS providers. Contributors may make requests for Commission nondisclosure of company-specific revenue information under § 0.459 of this chapter by so indicating on the Telecommunications Reporting Worksheet at the time that the subject data are submitted. The Commission shall make all decisions regarding nondisclosure of company-specific information.

(J) The administrator's performance and this plan shall be reviewed by the Commission after two years.

(K) All parties providing services or contributions or receiving payments under this section are subject to the enforcement provisions specified in the Communications Act, the Americans with Disabilities Act, and the Commission's rules.

(6) *Complaints*—(i) *Referral of complaint.* If a complaint to the Commission alleges a violation of this subpart with respect to intrastate TRS within a state and certification of the program of such state under § 64.605 is in effect, the Commission shall refer such complaint to such state expeditiously.

(ii) Intrastate complaints shall be resolved by the state within 180 days after the complaint is first filed with a state entity, regardless of whether it is filed with the state relay administrator, a state PUC, the relay provider, or with any other state entity.

(iii) *Jurisdiction of Commission.* After referring a complaint to a state entity under paragraph (c)(6)(i) of this section, or if a complaint is filed directly with a state entity, the Commission shall exercise jurisdiction over such complaint only if:

(A) Final action under such state program has not been taken within:

(*1*) 180 days after the complaint is filed with such state entity; or

(*2*) A shorter period as prescribed by the regulations of such state; or

(B) The Commission determines that such state program is no longer qualified for certification under § 64.605.

(iv) The Commission shall resolve within 180 days after the complaint is filed with the Commission any interstate TRS complaint alleging a violation of section 225 of the Act or any complaint involving intrastate relay services in states without a certified program. The Commission shall resolve intrastate complaints over which it exercises jurisdiction under paragraph (c)(6)(iii) of this section within 180 days.

(v) *Complaint Procedures.* Complaints against TRS providers for alleged violations of this subpart may be either informal or formal.

(A) *Informal Complaints.*

(*1*) Form. An informal complaint may be transmitted to the Consumer Information Bureau by any reasonable means, such as letter, facsimile transmission, telephone (voice/TRS/TTY), Internet e-mail, or some other method that would best accommodate a complainant's hearing or speech disability.

(*2*) Content. An informal complaint shall include the name and address of the complainant; the name and address of the TRS provider against whom the complaint is made; a statement of facts supporting the complainant's allegation that the TRS provided it has violated or is violating section 225 of the Act and/or requirements under the Commission's rules; the specific relief or satisfaction sought by the complainant; and the complainant's preferred format or method of response to the complaint by the Commission and the defendant TRS provider (such as letter, facsimile transmission, telephone (voice/TRS/TTY), Internet e-mail, or some other method that would best accommodate the complainant's hearing or speech disability).

(*3*) Service; designation of agents. The Commission shall promptly forward any complaint meeting the requirements of this subsection to the TRS provider named in the complaint. Such TRS provider shall be called upon to satisfy or answer the complaint within the time specified by the Commission. Every TRS provider shall file with the Commission a statement designating an agent or agents whose principal responsibility will be to receive all complaints, inquiries, orders, decisions, and notices and other pronouncements forwarded by the Commission. Such designation shall include a name or department designation, business address, telephone number (voice and TTY), facsimile number and, if available, internet e-mail address.

(B) *Review and disposition of informal complaints.* (*1*) Where it appears from the TRS provider's answer, or from other communications with the parties, that an informal complaint has been satisfied, the Commission may, in its discretion, consider the matter closed without response to the complainant or defendant. In all other cases, the Commission shall inform the parties of its review and disposition of a complaint filed under this subpart. Where practicable, this information shall be transmitted to the complainant and defendant in the manner requested by the complainant (*e.g.,* letter, facsmile transmission, telephone (voice/TRS/TTY) or Internet e-mail.

(*2*) A complainant unsatisfied with the defendant's response to the informal complaint and the staff's decision to terminate action on the informal complaint may file a formal complaint with the Commission pursuant to paragraph (c)(6)(v)(C) of this section.

(C) *Formal complaints.* A formal complaint shall be in writing, addressed to the Federal Communications Commission, Enforcement Bureau, Telecommunications Consumer Division, Washington, DC 20554 and shall contain:

(*1*) The name and address of the complainant,

(*2*) The name and address of the defendant against whom the complaint is made,

(*3*) A complete statement of the facts, including supporting data, where available, showing that such defendant did or omitted to do anything in contravention of this subpart, and

(*4*) The relief sought.

(D) *Amended complaints.* An amended complaint setting forth transactions, occurrences or events which have happened since the filing of the original complaint and which relate to the original cause of action may be filed with the Commission.

(E) *Number of copies.* An original and two copies of all pleadings shall be filed.

(F) *Service.* (*1*) Except where a complaint is referred to a state pursuant to § 64.604(c)(6)(i), or where a complaint is filed directly with a state entity, the Commission will serve on the named party a copy of any complaint or amended complaint filed with it, together with a notice of the filing of the complaint. Such notice shall call upon the defendant to satisfy or answer the complaint in writing within the time specified in said notice of complaint.

(*2*) All subsequent pleadings and briefs shall be served by the filing party on all other parties to the proceeding in accordance with the requirements of § 1.47 of this chapter. Proof of such service shall also be made in accordance with the requirements of said section.

(G) *Answers to complaints and amended complaints.* Any party upon whom a copy of a complaint or amended complaint is served under this subpart shall serve an answer within the time specified by the Commission in its notice of complaint. The answer shall advise the parties and the Commission fully and completely of the nature of the defense and shall respond specifically to all material allegations of the complaint. In cases involving allegations of harm, the answer shall indicate what action has been taken or is proposed to be taken to stop the occurrence of such harm. Collateral or immaterial issues shall be avoided in answers and every effort should be made to narrow the issues. Matters alleged as affirmative defenses shall be separately stated and numbered. Any defendant failing to file and serve an answer within the time and in the manner prescribed may be deemed in default.

(H) *Replies to answers or amended answers.* Within 10 days after service of an answer or an amended answer, a complainant may file and serve a reply which shall be responsive to matters contained in such answer or amended answer and shall not contain new matter. Failure to reply will not be deemed an admission of any allegation contained in such answer or amended answer.

(I) *Defective pleadings.* Any pleading filed in a complaint proceeding that is not in substantial conformity with the requirements of the applicable rules in this subpart may be dismissed.

(7) *Treatment of TRS customer information.* Beginning on July 21, 2000, all future contracts between the TRS administrator and the TRS vendor shall provide for the transfer of TRS customer profile data from the outgoing TRS vendor to the incoming TRS vendor. Such data must be disclosed in usable form at least 60 days prior to the provider's last day of service provision. Such data may not be used for any purpose other than to connect the TRS user with the called parties desired by that TRS user. Such information shall not be sold, distributed, shared or revealed in any other way by the relay center or its employees, unless compelled to do so by lawful order.

[65 FR 38436, June 21, 2000, as amended at 65 FR 54804, Sept. 11, 2000]

EFFECTIVE DATE NOTE: At 65 FR 38436, June 21, 2000, § 64.604 was revised, effective June 30, 2000. Paragraphs 64.604(b)(2), (c)(1) and (c)(5)(i) contain information collection and recordkeeping requirements and will not become effective until approval has been given by the Office of Management and Budget. At 65 FR 54804, Sept. 11, 2000, § 64.604 was amended by adding a sentence to the end of paragraph (c)(3), effective Oct. 11, 2000.

### § 64.605 State certification.

(a) *State documentation.* Any state, through its office of the governor or

other delegated executive office empowered to provide TRS, desiring to establish a state program under this section shall submit, not later than October 1, 1992, documentation to the Commission addressed to the Federal Communications Commission, Chief, Common Carrier Bureau, TRS Certification Program, Washington, DC 20554, and captioned ''TRS State Certification Application.'' All documentation shall be submitted in narrative form, shall clearly describe the state program for implementing intrastate TRS, and the procedures and remedies for enforcing any requirements imposed by the state program. The Commission shall give public notice of states filing for certification including notification in the FEDERAL REGISTER.

(b) *Requirements for certification.* After review of state documentation, the Commission shall certify, by letter, or order, the state program if the Commission determines that the state certification documentation:

(1) Establishes that the state program meets or exceeds all operational, technical, and functional minimum standards contained in § 64.604;

(2) Establishes that the state program makes available adequate procedures and remedies for enforcing the requirements of the state program, including that it makes available to TRS users informational materials on state and Commission complaint procedures sufficient for users to know the proper procedures for filing complaints; and

(3) Where a state program exceeds the mandatory minimum standards contained in § 64.604, the state establishes that its program in no way conflicts with federal law.

(c) *Certification period.* State certification shall remain in effect for five years. One year prior to expiration of certification, a state may apply for renewal of its certification by filing documentation as prescribed by paragraphs (a) and (b) of this section.

(d) *Method of funding.* Except as provided in § 64.604, the Commission shall not refuse to certify a state program based solely on the method such state will implement for funding intrastate TRS, but funding mechanisms, if labeled, shall be labeled in a manner that promote national understanding of TRS and do not offend the public.

(e) *Suspension or revocation of certification.* The Commission may suspend or revoke such certification if, after notice and opportunity for hearing, the Commission determines that such certification is no longer warranted. In a state whose program has been suspended or revoked, the Commission shall take such steps as may be necessary, consistent with this subpart, to ensure continuity of TRS. The Commission may, on its own motion, require a certified state program to submit documentation demonstrating ongoing compliance with the Commission's minimum standards if, for example, the Commission receives evidence that a state program may not be in compliance with the minimum standards.

(f) *Notification of substantive change.* States must notify the Commission of substantive changes in their TRS programs within 60 days of when they occur, and must certify that the state TRS program continues to meet federal minimum standards after implementing the substantive change.

[65 FR 38440, June 21, 2000]

EFFECTIVE DATE NOTE: At 65 FR 38440, June 21, 2000, § 64.605 was revised, effective Dec. 18, 2000, except for paragraph (f) which contains information collection and recordkeeping requirements and will not become effective until approval has been given by the Office of Management and Budget. For the convenience of the user, the superseded text is set forth as follows.

**§ 64.605 State certification.**

(a) *State documentation.* Any state, through its office of the governor or other delegated executive office empowered to provide TRS, desiring to establish a state program under this section shall submit, not later than October 1, 1992, documentation to the Commission addressed to the Federal Communications Commission, Chief, Common Carrier Bureau, TRS Certification Program, Washington, DC 20554, and captioned ''TRS State Certification Application.'' All documentation shall be submitted in narrative form, shall clearly describe the state program for implementing intrastate TRS, and the procedures and remedies for enforcing any requirements imposed by the state program. The Commission shall give public notice of states filing for certification including notification in the FEDERAL REGISTER.

(b) *Requirements for certification.* After review of state documentation, the Commission shall certify, by letter, or order, the state program if the Commission determines that the state certification documentation:

(1) Establishes that the state program meets or exceeds all operational, technical, and functional minimum standards contained in § 64.604;

(2) Establishes that the state program makes available adequate procedures and remedies for enforcing the requirements of the state program; and

(3) Where a state program exceeds the mandatory minimum standards contained in § 64.604, the state establishes that its program in no way conflicts with federal law.

(c) *Certification period.* State certification shall remain in effect for five years. One year prior to expiration of certification, a state may apply for renewal of its certification by filing documentation as prescribed by paragraphs (a) and (b) of this section.

(d) *Method of funding.* Except as provided in § 64.604, the Commission shall not refuse to certify a state program based solely on the method such state will implement for funding intrastate TRS, but funding mechanisms, if labeled, shall be labeled in a manner that promote national understanding of TRS and do not offend the public.

(e) *Suspension or revocation of certification.* The Commission may suspend or revoke such certification if, after notice and opportunity for hearing, the Commission determines that such certification is no longer warranted. In a state whose program has been suspended or revoked, the Commission shall take such steps as may be necessary, consistent with this subpart, to ensure continuity of TRS.

### § 64.606 Furnishing related customer premises equipment.

(a) Any communications common carrier may provide, under tariff, customer premises equipment (other than hearing aid compatible telephones as defined in part 68 of this chapter, needed by persons with hearing, speech, vision or mobility disabilities. Such equipment may be provided to persons with those disabilities or to associations or institutions who require such equipment regularly to communicate with persons with disabilities. Examples of such equipment include, but are not limited to, artificial larynxes, bone conductor receivers and TTs.

(b) Any carrier which provides telecommunications devices for persons with hearing and/or speech disabilities, whether or not pursuant to tariff, shall respond to any inquiry concerning:

(1) The availability (including general price levels) of TTs using ASCII, Baudot, or both formats; and

(2) The compatibility of any TT with other such devices and computers.

### § 64.607 Provision of hearing aid compatible telephones by exchange carriers.

In the absence of alternative suppliers in an exchange area, an exchange carrier must provide a hearing aid compatible telephone, as defined in § 68.316 of this chapter, and provide related installation and maintenance services for such telephones on a detariffed basis to any customer with a hearing disability who requests such equipment or services.

[61 FR 42185, Aug. 14, 1996]

### § 64.608 Enforcement of related customer premises equipment rules.

Enforcement of §§ 64.606 and 64.607 is delegated to those state public utility or public service commissions which adopt those sections and provide for their enforcement. Subpart G—Furnishing of Enhanced Services and Customer-Premises Equipment by Communications Common Carriers

## Subpart G—Furnishing of Enhanced Services and Customer-Premises Equipment by Bell Operating Companies; Telephone Operator Services

### § 64.702 Furnishing of enhanced services and customer-premises equipment.

(a) For the purpose of this subpart, the term *enhanced service* shall refer to services, offered over common carrier transmission facilities used in interstate communications, which employ computer processing applications that act on the format, content, code, protocol or similar aspects of the subscriber's transmitted information; provide the subscriber additional, different, or restructured information; or involve subscriber interaction with stored information. Enhanced services are not regulated under title II of the Act.

(b) Bell Operating Companies common carriers subject, in whole or in

part, to the Communications Act may directly provide enhanced services and customer-premises equipment; provided, however, that the Commission may prohibit any such common carrier from engaging directly or indirectly in furnishing enhanced services or customer-premises equipment to others except as provided for in paragraph (c) of this section, or as otherwise authorized by the Commission.

(c) A Bell Operating Company common carrier prohibited by the Commission pursuant to paragraph (b) of this section from engaging in the furnishing of enhanced services or customer-premises equipment may, subject to other provisions of law, have a controlling or lesser interest in, or be under common control with, a separate corporate entity that furnishes enhanced services or customer-premises equipment to others provided the following conditions are met:

(1) Each such separate corporation shall obtain all transmission facilities necessary for the provision of enhanced services pursuant to tariff, and may not own any network or local distribution transmission facilities or equipment.

(2) Each such separate corporation shall operate independently in the furnishing of enhanced services and customer-premises equipment. It shall maintain its own books of account, have separate officers, utilize separate operating, marketing, installation, and maintenance personnel, and utilize separate computer facilities in the provision of enhanced services.

(3) Each such separate corporation which provides customer-premises equipment or enhanced services shall deal with any affiliated manufacturing entity only on an arm's length basis.

(4) Any research or development performed on a joint or separate basis for the subsidiary must be done on a compensatory basis. Except for generic software within equipment, manufactured by an affiliate, that is sold ''off the shelf'' to any interested purchaser, the separate corporation must develop its own software, or contract with non-affiliated vendors.

(5) All transactions between the separate corporation and the carrier or its affiliates which involve the transfer, either direct or by accounting or other record entries, of money, personnel, resources, other assets or anything of value, shall be reduced to writing. A copy of any contract, agreement, or other arrangement entered into between such entities shall be filed with the Commission within 30 days after the contract, agreement, or other arrangement is made. This provision shall not apply to any transaction governed by the provision of an effective state or federal tariff.

(d) A carrier subject to the proscription set forth in paragraph (c) of this section:

(1) Shall not engage in the sale or promotion of enhanced services or customer-premises equipment, on behalf of the separate corporation, or sell, lease or otherwise make available to the separate corporation any capacity or computer system component on its computer system or systems which are used in any way for the provision of its common carrier communications services. (This does not apply to communications services offered the separate subsidiary pursuant to tariff);

(2) Shall disclose to the public all information relating to network design and technical standards and information affecting changes to the telecommunications network which would affect either intercarrier interconnection or the manner in which customer-premises equipment is attached to the interstate network prior to implementation and with reasonable advance notification. Such information shall be disclosed in compliance with the procedures set forth in 47 CFR 51.325 through 51.335.

(3) [Reserved]

(4) Must obtain Commission approval as to the manner in which the separate corporation is to be capitalized, prior to obtaining any interest in the separate corporation or transferring any assets, and must obtain Commission approval of any modification to a Commission approved capitalization plan.

(e) Except as otherwise ordered by the Commission, after March 1, 1982, the carrier provision of customer-premises equipment used in conjunction with the interstate telecommunications network shall be separate and

distinct from provision of common carrier communications services and not offered on a tariffed basis.

(Secs. 4, 201–205, 403, 404, 410; 48 Stat., as amended, 1066, 1070–1072, 1094, 1098; (47 U.S.C. 154, 201–205, 403, 404, 410))

[45 FR 31364, May 13, 1980, as amended at 46 FR 6008, Jan. 21, 1981; 63 FR 20338, Apr. 24, 1998; 64 FR 14148, Mar. 24, 1999]

EFFECTIVE DATE NOTE: At 64 FR 14148, Mar. 24, 1999, § 64.702(b), (c) and (d)(2) were amended. These paragraphs contain information collection and recordkeeping requirements and will not become effective until approval has been given by the Office of Management and Budget.

### § 64.703 Consumer information.

(a) Each provider of operator services shall:

(1) Identify itself, audibly and distinctly, to the consumer at the beginning of each telephone call and before the consumer incurs any charge for the call;

(2) Permit the consumer to terminate the telephone call at no charge before the call is connected;

(3) Disclose immediately to the consumer, upon request and at no charge to the consumer—

(i) A quotation of its rates or charges for the call;

(ii) The methods by which such rates or charges will be collected; and

(iii) The methods by which complaints concerning such rates, charges, or collection practices will be resolved; and

(4) Disclose, audibly and distinctly to the consumer, at no charge and before connecting any interstate, domestic, interexchange non-access code operator service call, how to obtain the total cost of the call, including any aggregator surcharge, or the maximum possible total cost of the call, including any aggregator surcharge, before providing further oral advice to the consumer on how to proceed to make the call. The oral disclosure required in this subsection shall instruct consumers that they may obtain applicable rate and surcharge quotations either, at the option of the provider of operator services, by dialing no more than two digits or by remaining on the line.

(b) Each aggregator shall post on or near the telephone instrument, in plain view of consumers:

(1) The name, address, and toll-free telephone number of the provider of operator services;

(2) Except for CMRS aggregators, a written disclosure that the rates for all operator-assisted calls are available on request, and that consumers have a right to obtain access to the intestate common carrier of their choice and may contact their preferred interstate common carriers for information on accessing that carrier's service using that telephone;

(3) In the case of a pay telephone, the local coin rate for the pay telephone location; and

(4) The name and address of the Enforcement Division of the Common Carrier Bureau of the Commission (FCC, Enforcement Division, CCB, Mail Stop 1600A2, Washington, DC 20554), to which the consumer may direct complaints regarding operator services.

(c) *Updating of postings.* The posting required by this section shall be updated as soon as practicable following any change of the carrier presubscribed to provide interstate service at an aggregator location, but no later than 30 days following such change. This requirement may be satisfied by applying to a payphone a temporary sticker displaying the required posting information, provided that any such temporary sticker shall be replaced with permanent signage during the next regularly scheduled maintenance visit.

(d) *Effect of state law or regulation.* The requirements of paragraph (b) of this section shall not apply to an aggregator in any case in which State law or State regulation requires the aggregator to take actions that are substantially the same as those required in paragraph (b) of this section.

(e) Each provider of operator services shall ensure, by contract or tariff, that each aggregator for which such provider is the presubscribed provider of operator services is in compliance with the requirements of paragraph (b) of this section.

[56 FR 18523, Apr. 23, 1991, as amended at 61 FR 14981, Apr. 4, 1996; 61 FR 52323, Oct. 7, 1996; 63 FR 11617, Mar. 10, 1998; 63 FR 43041, Aug. 11, 1998; 64 FR 47119, Aug. 30, 1999]

### § 64.704 Call blocking prohibited.

(a) Each aggregator shall ensure that each of its telephones presubscribed to a provider of operator services allows the consumer to use ''800'' and ''950'' access code numbers to obtain access to the provider of operator services desired by the consumer.

(b) Each provider of operator services shall:

(1) Ensure, by contract or tariff, that each aggregator for which such provider is the presubscribed provider of operator services is in compliance with the requirements of paragraphs (a) and (c) of this section; and

(2) Withhold payment (on a location-by-location basis) of any compensation, including commissions, to aggregators if such provider reasonably believes that the aggregator is blocking access to interstate common carriers in violation of paragraphs (a) or (c) of this section.

(c) Each aggregator shall, by the earliest applicable date set forth in this paragraph, ensure that any of its equipment presubscribed to a provider of operator services allows the consumer to use equal access codes to obtain access to the consumer's desired provider of operator services.

(1) Each pay telephone shall, within six (6) months of the effective date of this paragraph, allow the consumer to use equal access codes to obtain access to the consumer's desired provider of operator services.

(2) All equipment that is technologically capable of identifying the dialing of an equal access code followed by any sequence of numbers that will result in billing to the originating telephone and that is technologically capable of blocking access through such dialing sequences without blocking access through other dialing sequences involving equal access codes, shall, within six (6) months of the effective date of this paragraph or upon installation, whichever is sooner, allow the consumer to use equal access codes to obtain access to the consumer's desired provider of operator services.

(3) All equipment or software that is manufactured or imported on or after April 17, 1992, and installed by any aggregator shall, immediately upon installation by the aggregator, allow the consumer to use equal access codes to obtain access to the consumer's desired provider of operator services.

(4) All equipment that can be modified at a cost of no more than $15.00 per line to be technologically capable of identifying the dialing of an equal access code followed by any sequence of numbers that will result in billing to the originating telephone and to be technologically capable of blocking access through such dialing sequences without blocking access through other dialing sequences involving equal access codes, shall, within eighteen (18) months of the effective date of this paragraph, allow the consumer to use equal access codes to obtain access to the consumer's desired provider of operator services.

(5) All equipment not included in paragraphs (c)(1), (c)(2), (c)(3), or (c)(4) of this section shall, no later than April 17, 1997, allow the consumer to use equal access codes to obtain access to the consumer's desired provider of operator services.

(6) This paragraph does not apply to the use by consumers of equal access code dialing sequences that result in billing to the originating telephone.

(d) All providers of operator services, except those employing a store-and-forward device that serves only consumers at the location of the device, shall establish an ''800'' or ''950'' access code number within six (6) months of the effective date of this paragraph.

(e) The requirements of this section shall not apply to CMRS aggregators and providers of CMRS operator services.

[56 FR 18523, Apr. 23, 1991, as amended at 56 FR 40799, Aug. 16, 1991; 57 FR 34260, Aug. 4, 1992; 63 FR 43041, Aug. 11, 1998]

### § 64.705 Restrictions on charges related to the provision of operator services.

(a) A provider of operator services shall:

(1) Not bill for unanswered telephone calls in areas where equal access is available;

(2) Not knowingly bill for unanswered telephone calls where equal access is not available;

(3) Not engage in call splashing, unless the consumer requests to be transferred to another provider of operator services, the consumer is informed prior to incurring any charges that the rates for the call may not reflect the rates from the actual originating location of the call, and the consumer then consents to be transferred;

(4) Except as provided in paragraph (a)(3) of this section, not bill for a call that does not reflect the location of the origination of the call; and

(5) Ensure, by contract or tariff, that each aggregator for which such provider is the presubscribed provider of operator services is in compliance with the requirements of paragraph (b) of this section.

(b) An aggregator shall ensure that no charge by the aggregator to the consumer for using an ''800'' or ''950'' access code number, or any other access code number, is greater than the amount the aggregator charges for calls placed using the presubscribed provider of operator services.

(c) The requirements of paragraphs (a)(5) and (b) of this section shall not apply to CMRS aggregators and providers of CMRS operator services.

[56 FR 18523, Apr. 23, 1991, as amended at 63 FR 43041, Aug. 11, 1998]

### § 64.706 Minimum standards for the routing and handling of emergency telephone calls.

Upon receipt of any emergency telephone call, providers of operator services and aggregators shall ensure immediate connection of the call to the appropriate emergency service of the reported location of the emergency, if known, and, if not known, of the originating location of the call.

[61 FR 14981, Apr. 4, 1996]

### § 64.707 Public dissemination of information by providers of operator services.

Providers of operator services shall regularly publish and make available at no cost to inquiring consumers written materials that describe any recent changes in operator services and in the choices available to consumers in that market.

[56 FR 18524, Apr. 23, 1991]

### § 64.708 Definitions.

As used in §§ 64.703 through 64.707 of this part and § 68.318 of this chapter (47 CFR 64.703–64.707, 68.318):

(a) *Access code* means a sequence of numbers that, when dialed, connect the caller to the provider of operator services associated with that sequence;

(b) *Aggregator* means any person that, in the ordinary course of its operations, makes telephones available to the public or to transient users of its premises, for interstate telephone calls using a provider of operator services;

(c) *Call splashing* means the transfer of a telephone call from one provider of operator services to another such provider in such a manner that the subsequent provider is unable or unwilling to determine the location of the origination of the call and, because of such inability or unwillingness, is prevented from billing the call on the basis of such location;

(d) *CMRS aggregator* means an aggregator that, in the ordinary course of its operations, makes telephones available to the public or to transient users of its premises for interstate telephone calls using a provider of CMRS operator services;

(e) *CMRS operator services* means operator services provided by means of a commercial mobile radio service as defined in section 20.3 of this chapter.

(f) *Consumer* means a person initiating any interstate telephone call using operator services. In collect calling arrangements handled by a provider of operator services, both the party on the originating end of the call and the party on the terminating end of the call are consumers under this definition.

(g) *Equal access* has the meaning given that term in Appendix B of the Modification of Final Judgment entered by the United States District Court on August 24, 1982, in *United States* v. *Western Electric,* Civil Action No. 82–0192 (D.D.C. 1982), as amended by the Court in its orders issued prior to October 17, 1990;

(h) *Equal access code* means an access code that allows the public to obtain an equal access connection to the carrier associated with that code;

(i) *Operator services* means any interstate telecommunications service initiated from an aggregator location that includes, as a component, any automatic or live assistance to a consumer to arrange for billing or completion, or both, of an interstate telephone call through a method other than:

(1) Automatic completion with billing to the telephone from which the call originated; or

(2) Completion through an access code used by the consumer, with billing to an account previously established with the carrier by the consumer;

(j) *Presubscribed provider of operator services* means the interstate provider of operator services to which the consumer is connected when the consumer places a call using a provider of operator services without dialing an access code;

(k) *Provider of CMRS operator services* means a provider of operator services that provides CMRS operator services;

(l) *Provider of operator services* means any common carrier that provides operator services or any other person determined by the Commission to be providing operator services.

[56 FR 18524, Apr. 23, 1991; 56 FR 25721, June 5, 1991, as amended at 61 FR 14981, Apr. 4, 1996; 63 FR 43041, Aug. 11, 1998]

### § 64.709 Informational tariffs.

(a) Informational tariffs filed pursuant to 47 U.S.C. 226(h)(1)(A) shall contain specific rates expressed in dollars and cents for each interstate operator service of the carrier and shall also contain applicable per call aggregator surcharges or other per call fees, if any, collected from consumers by the carrier or any other entity.

(b) Per call fees, if any, billed on behalf of aggregators or others, shall be specified in informational tariffs in dollars and cents.

(c) In order to remove all doubt as to their proper application, all informational tariffs must contain clear and explicit explanatory statements regarding the rates, *i.e.*, the tariffed price per unit of service, and the regulations governing the offering of service in that tariff.

(d) Informational tariffs shall be accompanied by a cover letter, addressed to the Secretary of the Commission, explaining the purpose of the filing.

(1) The original of the cover letter shall be submitted to the Secretary without attachments, along with FCC Form 159, and the appropriate fee to the Mellon Bank, Pittsburgh, Pennsylvania.

(2) Copies of the cover letter and the attachments shall be submitted to the Secretary's Office, the Commission's contractor for public records duplication, and the Chief, Tariff and Price Analysis Branch, Competitive Pricing Division.

(e) Any changes to the tariff shall be submitted under a new cover letter with a complete copy of the tariff, including changes.

(1) Changes to a tariff shall be explained in the cover letter but need not be symbolized on the tariff pages.

(2) Revised tariffs shall be filled pursuant to the procedures specified in this section.

[63 FR 11617, Mar. 10, 1998; 63 FR 15316, Mar. 31, 1998]

### § 64.710 Operator services for prison inmate phones.

(a) Each provider of inmate operator services shall:

(1) Identify itself, audibly and distinctly, to the consumer before connecting any interstate, domestic, interexchange telephone call and disclose immediately thereafter how the consumer may obtain rate quotations, by dialing no more than two digits or remaining on the line, for the first minute of the call and for additional minutes, before providing further oral advice to the consumer how to proceed to make the call;

(2) Permit the consumer to terminate the telephone call at no charge before the call is connected; and

(3) Disclose immediately to the consumer, upon request and at no charge to the consumer—

(i) The methods by which its rates or charges for the call will be collected; and

(ii) The methods by which complaints concerning such rates, charges or collection practices will be resolved.

(b) As used in this subpart:

(1) *Consumer* means the party to be billed for any interstate, domestic,

interexchange call from an inmate telephone;

(2) *Inmate telephone* means a telephone instrument set aside by authorities of a prison or other correctional institution for use by inmates.

(3) *Inmate operator services* means any interstate telecommunications service initiated from an inmate telephone that includes, as a component, any automatic or live assistance to a consumer to arrange for billing or completion, or both, of an interstate telephone call through a method other than:

(i) Automatic completion with billing to the telephone from which the call originated; or

(ii) Completion through an access code used by the consumer, with billing to an account previously established with the carrier by the consumer;

(4) *Provider of inmate operator services* means any common carrier that provides outbound interstate, domestic, interexchange operator services from inmate telephones.

[63 FR 11617, Mar. 10, 1998]

## Subpart H—Extension of Unsecured Credit for Interstate and Foreign Communications Services to Candidates for Federal Office

AUTHORITY: Secs. 4, 201, 202, 203, 218, 219, 48 Stat. 1066, 1070, 1077; 47 U.S.C. 154, 201, 202, 203, 218, 219; sec. 401, 86 Stat. 19; 2 U.S.C. 451.

SOURCE: 37 FR 9393, May 10, 1972, unless otherwise noted.

### § 64.801 Purpose.

Pursuant to section 401 of the Federal Election Campaign Act of 1971, Public Law 92–225, these rules prescribe the general terms and conditions for the extension of unsecured credit by a communication common carrier to a candidate or person on behalf of such candidate for Federal office.

### § 64.802 Applicability.

These rules shall apply to each communication common carrier subject to the whole or part of the Communications Act of 1934, as amended.

### § 64.803 Definitions.

For the purposes of this subpart:

(a) *Candidate* means an individual who seeks nomination for election, or election, to Federal office, whether or not such individual is elected, and an individual shall be deemed to seek nomination for election, or election, if he has (1) taken the action necessary under the law of a State to qualify himself for nomination for election, or election, to Federal office, or (2) received contributions or made expenditures, or has given his consent for any other person to receive contributions or make expenditures, with a view to bringing about his nomination for election, or election, to such office.

(b) *Election* means (1) a general, special, primary, or runoff election, (2) a convention or caucus of a political party held to nominate a candidate, (3) a primary election held for the selection of delegates to a national nominating convention of a political party, and (4) a primary election held for the expression of a preference for the nomination of persons for election to the office of President.

(c) *Federal office* means the office of President or Vice President of the United States: or of Senator or Representative in, or Delegate or Resident Commissioner to, the Congress of the United States.

(d) *Person* means an individual, partnership, committee, association, corporation, labor organization, and any other organization or group of persons.

(e) *Unsecured credit* means the furnishing of service without maintaining on a continuing basis advance payment, deposit, or other security, that is designed to assure payment of the estimated amount of service for each future 2 months period, with revised estimates to be made on at least a monthly basis.

### § 64.804 Rules governing the extension of unsecured credit to candidates or persons on behalf of such candidates for Federal office for interstate and foreign common carrier communication services.

(a) There is no obligation upon a carrier to extend unsecured credit for interstate and foreign communication

services to a candidate or person on behalf of such candidate for Federal office. However, if the carrier chooses to extend such unsecured credit, it shall comply with the requirements set forth in paragraphs (b) through (g) of this section.

(b) If a carrier decides to extend unsecured credit to any candidate for Federal office or any person on behalf of such candidate, then unsecured credit shall be extended on substantially equal terms and conditions to all candidates and all persons on behalf of all candidates for the same office, with due regard for differences in the estimated quantity of service to be furnished each such candidate or person.

(c) Before extending unsecured credit, a carrier shall obtain a signed written application for service which shall identify the applicant and the candidate and state whether or not the candidate assumes responsibility for the charges, and which shall also expressly state as follows:

(1) That service is being requested by the applicant or applicants and that the person or persons making the application will be individually, jointly and severally liable for the payment of all charges; and

(2) That the applicant(s) understands that the carrier will (under the provisions of paragraph (d) of this section) discontinue service upon written notice if any amount due is not paid upon demand.

(d) If charges for services rendered are not paid to the carrier within 15 days from rendition of a bill therefor, the carrier shall forthwith at the end of the 15-day period serve written notice on the applicant of intent to discontinue service within 7 days of date of such notice for nonpayment and shall discontinue service at the end of the 7-day period unless all such sums due are paid in full within such 7-day period.

(e) Each carrier shall take appropriate action at law to collect any unpaid balance on an account for interstate and foreign communication services rendered to a candidate or person on behalf of such candidate prior to the expiration of the statute of limitations under section 415(a) of the Communications Act of 1934, as amended.

(f) The records of each account, involving the extension by a carrier of unsecured credit to a candidate or person on behalf of such candidate for common carrier communications services shall be maintained by the carrier so as to show separately, for interstate and foreign communication services all charges, credits, adjustments, and security, if any, and balance receivable.

(g) On or before January 31, 1973, and on corresponding dates of each year thereafter, each carrier which had operating revenues in the preceding year in excess of $1 million shall file with the Commission a report by account of any amount due and unpaid, as of the end of the month prior to the reporting date, for interstate and foreign communications services to a candidate or person on behalf of such candidate when such amount results from the extension of unsecured credit. Each report shall include the following information:

(1) Name of candidate.

(2) Name and address of person or persons applying for service.

(3) Balance due carrier.

(4) Reason for nonpayment.

(5) Payment arrangements, if any.

(6) Date service discontinued.

(7) Date, nature and status of any action taken at law in compliance with paragraph (e) of this section.

[37 FR 9393, May 10, 1972, as amended at 62 FR 5166, Feb. 4, 1997]

## Subpart I—Allocation of Costs

### § 64.901 Allocation of costs.

(a) Carriers required to separate their regulated costs from nonregulated costs shall use the attributable cost method of cost allocation for such purpose.

(b) In assigning or allocating costs to regulated and nonregulated activities, carriers shall follow the principles described herein.

(1) Tariffed services provided to a nonregulated activity will be charged to the nonregulated activity at the tariffed rates and credited to the regulated revenue account for that service.

(2) Costs shall be directly assigned to either regulated or nonregulated activities whenever possible.

(3) Costs which cannot be directly assigned to either regulated or nonregulated activities will be described as common costs. Common costs shall be grouped into homogeneous cost categories designed to facilitate the proper allocation of costs between a carrier's regulated and nonregulated activities. Each cost category shall be allocated between regulated and nonregulated activities in accordance with the following hierarchy:

(i) Whenever possible, common cost categories are to be allocated based upon direct analysis of the origin of the cost themselves.

(ii) When direct analysis is not possible, common cost categories shall be allocated based upon an indirect, cost-causative linkage to another cost category (or group of cost categories) for which a direct assignment or allocation is available.

(iii) When neither direct nor indirect measures of cost allocation can be found, the cost category shall be allocated based upon a general allocator computed by using the ratio of all expenses directly assigned or attributed to regulated and nonregulated activities.

(4) The allocation of central office equipment and outside plant investment costs between regulated and nonregulated activities shall be based upon the relative regulated and nonregulated usage of the investment during the calendar year when nonregulated usage is greatest in comparison to regulated usage during the three calendar years beginning with the calendar year during which the investment usage forecast is filed.

(c) A telecommunications carrier may not use services that are not competitive to subsidize services subject to competition. Services included in the definition of universal service shall bear no more than a reasonable share of the joint and common costs of facilities used to provide those services.

[52 FR 6560, Mar. 4, 1987, as amended at 52 FR 39534, Oct. 22, 1987; 54 FR 49762, Dec. 1, 1989; 62 FR 45588, Aug. 28, 1997]

### § 64.902 Transactions with affiliates.

Except for carriers which employ average schedules in lieu of determining their costs, all carriers subject to § 64.901 are also subject to the provisions of § 32.27 of this chapter concerning transactions with affiliates.

[55 FR 30461, July 26, 1990]

### § 64.903 Cost allocation manuals.

(a) Each local exchange carrier with annual operating revenues that equal or exceed the indexed revenue threshold, as defined in § 32.900 of this chapter, shall file with the Commission within 90 days after publication of that threshold in the FEDERAL REGISTER, a manual containing the following information regarding its allocation of costs between regulated and unregulated activities:

(1) A description of each of the carrier's nonregulated activities;

(2) A list of all the activities to which the carrier now accords incidental accounting treatment and the justification therefor;

(3) A chart showing all of the carrier's corporate affiliates;

(4) A statement identifying each affiliate that engages in or will engage in transactions with the carrier and describing the nature, terms and frequency of each transaction;

(5) A cost apportionment table showing, for each account containing costs incurred in providing regulated services, the cost pools with that account, the procedures used to place costs into each cost pool, and the method used to apportion the costs within each cost pool between regulated and nonregulated activities; and

(6) A description of the time reporting procedures that the carrier uses, including the methods or studies designed to measure and allocate nonproductive time.

(b) Each carrier shall ensure that the information contained in its cost allocation manual is accurate. Carriers must update their cost allocation manuals at least annually, except that changes to the cost apportionment table and to the description of time reporting procedures must be filed at the time of implementation. Annual cost allocation manual updates shall be filed on or before the last working day of each calendar year. Proposed changes in the description of time reporting procedures, the statement concerning affiliate transactions, and the

cost apportionment table must be accompanied by a statement quantifying the impact of each change on regulated operations. Changes in the description of time reporting procedures and the statement concerning affiliate transactions must be quantified in $100,000 increments at the account level. Changes in cost apportionment tables must be quantified in $100,000 increments at the cost pool level. The Chief, Common Carrier Bureau may suspend any such changes for a period not to exceed 180 days, and may thereafter allow the change to become effective or prescribe a different procedure.

(c) The Commission may by order require any other communications common carrier to file and maintain a cost allocation manual as provided in this section.

[57 FR 4375, Feb. 5, 1992, as amended at 59 FR 46358, Sept. 8, 1994; 61 FR 50246, Sept. 25, 1996; 62 FR 39779, July 24, 1997; 65 FR 16335, Mar. 28, 2000]

EFFECTIVE DATE NOTE: At 65 FR 16335, Mar. 28, 2000, § 64.903 was amended by revising paragraph (b), effective Sept. 28, 2000. This paragraph contains information collection requirements and will not become effective until approval has been given by the Office of Management and Budget.

### § 64.904 Independent audits.

(a) With the exception of mid-sized local exchange carriers, each local exchange carrier required to file a cost allocation manual, by virtue of having annual operating revenues that equal or exceed the indexed revenue threshold for a given year or by order by the Commission, shall elect to either (1) have an attest engagement performed by an independent auditor every two years, covering the prior two year period, or (2) have a financial audit performed by an independent auditor every two years, covering the prior two year period. In either case, the initial engagement shall be performed in the calendar year after the carrier is first required to file a cost allocation manual. The attest engagement shall be an examination engagement and shall provide a written communication that expresses an opinion that the systems, processes, and procedures applied by the carrier to generate the results reported pursuant to § 43.21(e)(2) of this chapter comply with the Commission's Joint Cost Orders issued in conjunction with CC Docket No. 86–111, the Commission's Accounting Safeguards proceeding in CC Docket No. 96–150, and the Commission's rules and regulations including §§ 32.23 and 32.27 of this chapter, § 64.901, and § 64.903 in force as of the date of the auditor's report. At least 30 days prior to beginning the attestation engagement, the independent auditors shall provide the Commission with the audit program. The attest engagement shall be conducted in accordance with the attestation standards established by the American Institute of Certified Public Accountants, except as otherwise directed by the Chief, Common Carrier Bureau. The biennial financial audit shall provide a positive opinion on whether the applicable data shown in the carrier's annual report required by § 43.21(e)(2) of this chapter present fairly, in all material respects, the information of the Commission's Joint Cost Orders issued in conjunction with CC Docket No. 86–111, the Commission's Accounting Safeguards proceeding in CC Docket No. 96–150, and the Commission's rules and regulations including §§ 32.23 and 32.27 of this chapter, § 64.901, and § 64.903 in force as of the date of the auditor's report. The audit shall be conducted in accordance with generally accepted auditing standards, except as otherwise directed by the Chief, Common Carrier Bureau.

(b) A mid-sized incumbent local exchange carrier, as defined in § 32.9000, required to file a cost allocation manual, shall have an attest engagement performed by an independent auditor every two years covering the two year period, with the initial engagement performed in the calendar year after the carrier is first required to file a cost allocation manual. The attest engagement shall be an examination engagement and shall provide a written communication that expresses an opinion that the results reported pursuant to § 43.21(e)(2) of this chapter are an accurate application of the Commission's Joint Cost orders issued in conjunction with CC Docket No. 86–111 and the Commission's Accounting Safeguards proceeding in CC Docket No. 96–150 and the Commission's rules and regulations

including §§ 32.23 and 32.27 of this chapter and §§ 64.901 and 64.903 in force as of the date of the auditor's written report. The written communication shall also express an opinion that the cost methodologies in place are in conformance with the cost allocation manual filed with the Commission. The attest engagement shall be conducted in accordance with the attestation standards established by the American Institute of Certified Public Accountants, except as otherwise directed by the Chief, Common Carrier Bureau.

(c) The report of the independent auditor shall be filed at the time that the local exchange carrier files the annual report required by § 43.21(f)(2) of this chapter.

[57 FR 4375, Feb. 5, 1992, as amended at 62 FR 39779, July 24, 1997; 64 FR 50009, Sept. 15, 1999; 65 FR 16335, Mar. 28, 2000]

EFFECTIVE DATE NOTE: At 65 FR 16335, Mar. 28, 2000, § 64.904 was amended by revising paragraph (a), effective Sept. 28, 2000. This paragraph contains information collection requirements and will not become effective until approval has been given by the Office of Management and Budget.

## Subpart J—International Settlements Policy and Modification Requests

### § 64.1001 International settlements policy and modification requests.

(a) The procedures set forth in this rule are subject to Commission policies on international operating agreements in CC Dkt. No. 90–337.

(b) If the international settlement arrangement in the operating agreement or amendment referred to in § 43.51(e)(1) or (e)(2) of this chapter differs from the arrangement in effect in the operating agreement of another carrier providing service to or from the same foreign point, the carrier must file a modification request under this section unless the international route is exempt from the international settlements policy under § 43.51(g) of this chapter.

(c) A modification request must contain the following information:

(1) The applicable international service;

(2) The name of the foreign telecommunications administration;

(3) The present accounting rate (including any surcharges);

(4) The new accounting rate (including any surcharges);

(5) The effective date;

(6) The division of the accounting rate; and

(7) An explanation of the proposed modification(s) in the operating agreement with the foreign correspondent.

(d) A modification request must contain a notarized statement that the filing carrier:

(1) Has not bargained for, nor has knowledge of, exclusive availability of the new accounting rate;

(2) Has not bargained for, nor has any indication that it will receive, more than its proportionate share of return traffic; and

(3) Has informed the foreign administration that U.S. policy requires that competing U.S. carriers have access to accounting rates negotiated by the filing carrier with the foreign administration on a nondiscriminatory basis.

(e) An operating agreement or amendment filed under a modification request cannot become effective until the modification request has been granted under paragraph (g) of this section.

(f) Carriers must serve a copy of the modification request on all carriers providing the same or similar service to the foreign administration identified in the filing on the same day a modification request is filed.

(g) All modification requests will be subject to a twenty-one (21) day pleading period for objections or comments, commencing the date after the request is filed. If the modification request is not complete when filed, the carrier will be notified that additional information is to be submitted, and a new 21 day pleading period will begin when the additional information is filed. The modification request will be deemed granted as of the twenty-second (22nd) day without any formal staff action being taken: provided

(1) No objections have been filed, and

(2) The International Bureau has not notified the carrier that grant of the modification request may not serve the public interest and that implementation of the proposed modification must

await formal staff action on the modification request. If objections or comments are filed, the carrier requesting the modification request may file a response pursuant to § 1.45 of this chapter. Modification requests that are formally opposed must await formal action by the International Bureau before the proposed modification can be implemented.

[56 FR 25372, June 4, 1991, as amended at 58 FR 4354, Jan. 14, 1993; 60 FR 5333, Jan. 27, 1995; 62 FR 5541, Feb. 6, 1997; 62 FR 64758, Dec. 9, 1997; 64 FR 34742, June 29, 1999]

## Subpart K—Changing Long Distance Service

### § 64.1100 Definitions.

(a) The term *submitting carrier* is generally any telecommunications carrier that requests on the behalf of a subscriber that the subscriber's telecommunications carrier be changed, and seeks to provide retail services to the end user subscriber. A carrier may be treated as a submitting carrier, however, if it is responsible for any unreasonable delays in the submission of carrier change requests or for the submission of unauthorized carrier change requests, including fraudulent authorizations.

(b) The term *executing carrier* is generally any telecommunications carrier that effects a request that a subscriber's telecommunications carrier be changed. A carrier may be treated as an executing carrier, however, if it is responsible for any unreasonable delays in the execution of carrier changes or for the execution of unauthorized carrier changes, including fraudulent authorizations.

(c) The term *authorized carrier* is generally any telecommunications carrier that submits a change, on behalf of a subscriber, in the subscriber's selection of a provider of telecommunications service with the subscriber's authorization verified in accordance with the procedures specified in this part.

(d) The term *unauthorized carrier* is generally any telecommunications carrier that submits a change, on behalf of a subscriber, in the subscriber's selection of a provider of telecommunications service but fails to obtain the subscriber's authorization verified in accordance with the procedures specified in this part.

(e) The term *unauthorized change* is a change in a subscriber's selection of a provider of telecommunications service that was made without authorization verified in accordance with the verification procedures specified in this part.

(f) The term *state commission* shall include any state entity with the state-designated authority to resolve the complaints of such state's residents arising out of an allegation that an unauthorized change of a telecommunication service provider has occurred that has elected, in accordance with the requirements of § 64.1110(a), to administer the Federal Communications Commission's slamming rules and remedies, as enumerated in §§ 64.1100 through 64.1190.

(g) The term *relevant governmental agency* shall be the state commission if the complainant files a complaint with the state commission or if the complaint is forwarded to the state commission by the Federal Communications Commission, and the Federal Communications Commission if the complainant files a complaint with the Federal Communications Commission, and the complaint is not forwarded to a state commission.

[65 FR 47690, Aug. 3, 2000]

### § 64.1110 State notification of election to administer FCC rules.

(a) *Initial Notification.* State notification of an intention to administer the Federal Communication Commission's unauthorized carrier change rules and remedies, as enumerated in §§ 64.1100 through 64.1190, shall be filed with the Commission Secretary in CC Docket No. 94–129 with a copy of such notification provided to the Consumer Information Bureau Chief. Such notification shall contain, at a minimum, information on where consumers should file complaints, the type of documentation, if any, that must accompany a complaint, and the procedures the state will use to adjudicate complaints.

(b) *Withdrawal of Notification.* State notification of an intention to discontinue administering the Federal

Communication Commission's unauthorized carrier change rules and remedies, as enumerated in §§ 64.1100 through 64.1190, shall be filed with the Commission Secretary in CC Docket No. 94–129 with a copy of such amended notification provided to the Consumer Information Bureau Chief. Such discontinuance shall become effective 60 days after the Commission's receipt of the state's letter.

[65 FR 47691, Aug. 3, 2000]

EFFECTIVE DATE NOTE: At 65 FR 47691, Aug. 3, 2000, § 64.1110 was added, effective Sept. 5, 2000. Paragraphs (a) and (b) contain information collection requirements and will not become effective until approval by the Office of Management and Budget.

### § 64.1120 Verification of orders for telecommunications service.

(a) No telecommunications carrier shall submit or execute a change on the behalf of a subscriber in the subscriber's selection of a provider of telecommunications service except in accordance with the procedures prescribed in this subpart. Nothing in this section shall preclude any State commission from enforcing these procedures with respect to intrastate services.

(1) No submitting carrier shall submit a change on the behalf of a subscriber in the subscriber's selection of a provider of telecommunications service prior to obtaining:

(i) Authorization from the subscriber, and

(ii) Verification of that authorization in accordance with the procedures prescribed in this section. The submitting carrier shall maintain and preserve records of verification of subscriber authorization for a minimum period of two years after obtaining such verification.

(2) An executing carrier shall not verify the submission of a change in a subscriber's selection of a provider of telecommunications service received from a submitting carrier. For an executing carrier, compliance with the procedures described in this part shall be defined as prompt execution, without any unreasonable delay, of changes that have been verified by a submitting carrier.

(3) Commercial mobile radio services (CMRS) providers shall be excluded from the verification requirements of this part as long as they are not required to provide equal access to common carriers for the provision of telephone toll services, in accordance with 47 U.S.C. 332(c)(8).

(b) Where a telecommunications carrier is selling more than one type of telecommunications service (*e.g.*, local exchange, intraLATA/intrastate toll, interLATA/interstate toll, and international toll) that carrier must obtain separate authorization from the subscriber for each service sold, although the authorizations may be made within the same solicitation. Each authorization must be verified separately from any other authorizations obtained in the same solicitation. Each authorization must be verified in accordance with the verification procedures prescribed in this part.

(c) No telecommunications carrier shall submit a preferred carrier change order unless and until the order has been confirmed in accordance with one of the following procedures:

(1) The telecommunications carrier has obtained the subscriber's written authorization in a form that meets the requirements of § 64.1130; or

(2) The telecommunications carrier has obtained the subscriber's electronic authorization to submit the preferred carrier change order. Such authorization must be placed from the telephone number(s) on which the preferred carrier is to be changed and must confirm the information in paragraph (a)(1) of this section. Telecommunications carriers electing to confirm sales electronically shall establish one or more toll-free telephone numbers exclusively for that purpose. Calls to the number(s) will connect a subscriber to a voice response unit, or similar mechanism, that records the required information regarding the preferred carrier change, including automatically recording the originating automatic number identification; or

(3) An appropriately qualified independent third party has obtained the subscriber's oral authorization to submit the preferred carrier change order that confirms and includes appropriate verification data (*e.g.* the subscriber's

date of birth or social security number). The independent third party must not be owned, managed, controlled, or directed by the carrier or the carrier's marketing agent; must not have any financial incentive to confirm preferred carrier change orders for the carrier or the carrier's marketing agent; and must operate in a location physically separate from the carrier or the carrier's marketing agent. The content of the verification must include clear and conspicuous confirmation that the subscriber has authorized a preferred carrier change; or

(4) Any State-enacted verification procedures applicable to intrastate preferred carrier change orders only.

[65 FR 47691, Aug. 3, 2000]

### § 64.1130 Letter of agency form and content.

(a) A telecommunications carrier may use a letter of agency to obtain written authorization and/or verification of a subscriber's request to change his or her preferred carrier selection. A letter of agency that does not conform with this section is invalid for purposes of this part.

(b) The letter of agency shall be a separate document (or an easily separable document) containing only the authorizing language described in paragraph (e) of this section having the sole purpose of authorizing a telecommunications carrier to initiate a preferred carrier change. The letter of agency must be signed and dated by the subscriber to the telephone line(s) requesting the preferred carrier change.

(c) The letter of agency shall not be combined on the same document with inducements of any kind.

(d) Notwithstanding paragraphs (b) and (c) of this section, the letter of agency may be combined with checks that contain only the required letter of agency language as prescribed in paragraph (e) of this section and the necessary information to make the check a negotiable instrument. The letter of agency check shall not contain any promotional language or material. The letter of agency check shall contain in easily readable, bold-face type on the front of the check, a notice that the subscriber is authorizing a preferred carrier change by signing the check. The letter of agency language shall be placed near the signature line on the back of the check.

(e) At a minimum, the letter of agency must be printed with a type of sufficient size and readable type to be clearly legible and must contain clear and unambiguous language that confirms:

(1) The subscriber's billing name and address and each telephone number to be covered by the preferred carrier change order;

(2) The decision to change the preferred carrier from the current telecommunications carrier to the soliciting telecommunications carrier;

(3) That the subscriber designates [insert the name of the submitting carrier] to act as the subscriber's agent for the preferred carrier change;

(4) That the subscriber understands that only one telecommunications carrier may be designated as the subscriber's interstate or interLATA preferred interexchange carrier for any one telephone number. To the extent that a jurisdiction allows the selection of additional preferred carriers (e.g., local exchange, intraLATA/intrastate toll, interLATA/interstate toll, or international interexchange) the letter of agency must contain separate statements regarding those choices, although a separate letter of agency for each choice is not necessary; and

(5) That the subscriber understands that any preferred carrier selection the subscriber chooses may involve a charge to the subscriber for changing the subscriber's preferred carrier.

(f) Any carrier designated in a letter of agency as a preferred carrier must be the carrier directly setting the rates for the subscriber.

(g) Letters of agency shall not suggest or require that a subscriber take some action in order to retain the subscriber's current telecommunications carrier.

(h) If any portion of a letter of agency is translated into another language then all portions of the letter of agency must be translated into that language. Every letter of agency must be translated into the same language as any

promotional materials, oral descriptions or instructions provided with the letter of agency.

[64 FR 7760, Feb. 16, 1999. Redesignated at 65 FR 47692, Aug. 3, 2000]

### § 64.1140 Carrier liability for slamming.

(a) *Carrier Liability for Charges.* Any submitting telecommunications carrier that fails to comply with the procedures prescribed in this part shall be liable to the subscriber's properly authorized carrier in an amount equal to 150% of all charges paid to the submitting telecommunications carrier by such subscriber after such violation, as well as for additional amounts as prescribed in § 64.1170. The remedies provided in this part are in addition to any other remedies available by law.

(b) *Subscriber Liability for Charges.* Any subscriber whose selection of telecommunications services provider is changed without authorization verified in accordance with the procedures set for in this part is liable for charges as follows:

(1) If the subscriber has not already paid charges to the unauthorized carrier, the subscriber is absolved of liability for charges imposed by the unauthorized carrier for service provided during the first 30 days after the unauthorized change. Upon being informed by a subscriber that an unauthorized change has occurred, the authorized carrier, the unauthorized carrier, or the executing carrier shall inform the subscriber of this 30-day absolution period. Any charges imposed by the unauthorized carrier on the subscriber for service provided after this 30–day period shall be paid by the subscriber to the authorized carrier at the rates the subscriber was paying to the authorized carrier at the time of the unauthorized change in accordance with the provisions of § 64.1160(e).

(2) If the subscriber has already paid charges to the unauthorized carrier, and the authorized carrier receives payment from the unauthorized carrier as provided for in paragraph (a) of this section, the authorized carrier shall refund or credit to the subscriber any amounts determined in accordance with the provisions of § 64.1170(c).

(3) If the subscriber has been absolved of liability as prescribed by this section, the unauthorized carrier shall also be liable to the subscriber for any charge required to return the subscriber to his or her properly authorized carrier, if applicable.

[65 FR 47691, Aug. 3, 2000]

EFFECTIVE DATE NOTE: At 65 FR 47691, Aug. 3, 2000, § 64.1140 was added, effective Sept. 5, 2000. Paragraphs (a) and (b) contain information collection requirements and will not become effective until approval by the Office of Management and Budget.

### § 64.1150 Procedures for resolution of unauthorized changes in preferred carrier.

(a) *Notification of Alleged Unauthorized Carrier Change.* Executing carriers who are informed of an unauthorized carrier change by a subscriber must immediately notify both the authorized and allegedly unauthorized carrier of the incident. This notification must include the identity of both carriers.

(b) *Referral of Complaint.* Any carrier, executing, authorized, or allegedly unauthorized, that is informed by a subscriber or an executing carrier of an unauthorized carrier change shall direct that subscriber either to the state commission or, where the state commission has not opted to administer these rules, to the Federal Communications Commission's Consumer Information Bureau, for resolution of the complaint.

(c) *Notification of Receipt of Complaint.* Upon receipt of an unauthorized carrier change complaint, the relevant governmental agency will notify the allegedly unauthorized carrier of the complaint and order that the carrier remove all unpaid charges for the first 30 days after the slam from the subscriber's bill pending a determination of whether an unauthorized change, as defined by § 64.1100(e), has occurred, if it has not already done so.

(d) *Proof of Verification.* Not more than 30 days after notification of the complaint, or such lesser time as is required by the state commission if a matter is brought before a state commission, the alleged unauthorized carrier shall provide to the relevant government agency a copy of any valid proof of verification of the carrier

change. This proof of verification must contain clear and convincing evidence of a valid authorized carrier change, as that term is defined in §§ 64.1150 through 64.1160. The relevant governmental agency will determine whether an unauthorized change, as defined by § 64.1100(e), has occurred using such proof and any evidence supplied by the subscriber. Failure by the carrier to respond or provide proof of verification will be presumed to be clear and convincing evidence of a violation.

(e) *Election of Forum.* The Federal Communications Commission will not adjudicate a complaint filed pursuant to § 1.719 or §§ 1.720 through 1.736 of this chapter, involving an alleged unauthorized change, as defined by § 64.1100(e), while a complaint based on the same set of facts is pending with a state commission.

[65 FR 47692, Aug. 3, 2000]

EFFECTIVE DATE NOTE: At 65 FR 47692, Aug. 3, 2000, § 64.1150 was added, effective Sept. 5, 2000. Paragraphs (a) through (d) contain information collection requirements and will not become effective until approval by the Office of Management and Budget.

### § 64.1160 Absolution procedures where the subscriber has not paid charges.

(a) This section shall only apply after a subscriber has determined that an unauthorized change, as defined by § 64.1100(e), has occurred and the subscriber has not paid charges to the allegedly unauthorized carrier for service provided for 30 days, or a portion thereof, after the unauthorized change occurred.

(b) An allegedly unauthorized carrier shall remove all charges incurred for service provided during the first 30 days after the alleged unauthorized change occurred, as defined by § 64.1100(e), from a subscriber's bill upon notification that such unauthorized change is alleged to have occurred.

(c) An allegedly unauthorized carrier may challenge a subscriber's allegation that an unauthorized change, as defined by § 64.1100(e), occurred. An allegedly unauthorized carrier choosing to challenge such allegation shall immediately notify the complaining subscriber that: the complaining subscriber must file a complaint with a state commission that has opted to administer the FCC's rules, pursuant to § 64.1110, or the FCC within 30 days of either; the date of removal of charges from the complaining subscriber's bill in accordance with paragraph (b) of this section or; the date the allegedly unauthorized carrier notifies the complaining subscriber of the requirements of this paragraph, whichever is later; and a failure to file such a complaint within this 30-day time period will result in the charges removed pursuant to paragraph (b) of this section being reinstated on the subscriber's bill and, consequently, the complaining subscriber's will only be entitled to remedies for the alleged unauthorized change other than those provided for in § 64.1140(b)(1). No allegedly unauthorized carrier shall reinstate charges to a subscriber's bill pursuant to the provisions of this paragraph without first providing such subscriber with a reasonable opportunity to demonstrate that the requisite complaint was timely filed within the 30-day period described in this paragraph.

(d) If the relevant governmental agency determines after reasonable investigation that an unauthorized change, as defined by § 64.1100(e), has occurred, an order shall be issued providing that the subscriber is entitled to absolution from the charges incurred during the first 30 days after the unauthorized carrier change occurred, and neither the authorized or unauthorized carrier may pursue any collection against the subscriber for those charges.

(e) If the subscriber has incurred charges for more than 30 days after the unauthorized carrier change, the unauthorized carrier must forward the billing information for such services to the authorized carrier, which may bill the subscriber for such services using either of the following means:

(1) The amount of the charge may be determined by a re-rating of the services provided based on what the authorized carrier would have charged the subscriber for the same services had an unauthorized change, as described in § 64.1100(e), not occurred; or

(2) The amount of the charge may be determined using a 50% Proxy Rate as

follows: Upon receipt of billing information from the unauthorized carrier, the authorized carrier may bill the subscriber for 50% of the rate the unauthorized carrier would have charged the subscriber for the services provided. However, the subscriber shall have the right to reject use of this 50% proxy method and require that the authorized carrier perform a re-rating of the services provided, as described in paragraph (e)(1) of this section.

(f) If the unauthorized carrier received payment from the subscriber for services provided after the first 30 days after the unauthorized change occurred, the obligations for payments and refunds provided for in § 64.1170 shall apply to those payments. If the relevant governmental agency determines after reasonable investigation that the carrier change was authorized, the carrier may re-bill the subscriber for charges incurred.

[65 FR 47692, Aug. 3, 2000]

EFFECTIVE DATE NOTE: At 65 FR 47692, Aug. 3, 2000, § 64.1160 was added, effective Sept. 5, 2000. Paragraphs (b) through (f) contain information collection requirements and will not become effective until approval by the Office of Management and Budget.

### § 64.1170 Reimbursement procedures where the subscriber has paid charges.

(a) The procedures in this section shall only apply after a subscriber has determined that an unauthorized change, as defined by § 64.1100(e), has occurred and the subscriber has paid charges to an allegedly unauthorized carrier.

(b) If the relevant governmental agency determines after reasonable investigation that an unauthorized change, as defined by § 64.1100(e), has occurred, it shall issue an order directing the unauthorized carrier to forward to the authorized carrier the following, in addition to any appropriate state remedies:

(1) An amount equal to 150% of all charges paid by the subscriber to the unauthorized carrier; and

(2) Copies of any telephone bills issued from the unauthorized carrier to the subscriber. This order shall be sent to the subscriber, the unauthorized carrier, and the authorized carrier.

(c) Within ten days of receipt of the amount provided for in paragraph (b)(1) of this section, the authorized carrier shall provide a refund or credit to the subscriber in the amount of 50% of all charges paid by the subscriber to the unauthorized carrier. The subscriber has the option of asking the authorized carrier to re-rate the unauthorized carrier's charges based on the rates of the authorized carrier and, on behalf of the subscriber, seek an additional refund from the unauthorized carrier, to the extent that the re-rated amount exceeds the 50% of all charges paid by the subscriber to the unauthorized carrier. The authorized carrier shall also send notice to the relevant governmental agency that it has given a refund or credit to the subscriber.

(d) If an authorized carrier incurs billing and collection expenses in collecting charges from the unauthorized carrier, the unauthorized carrier shall reimburse the authorized carrier for reasonable expenses.

(e) If the authorized carrier has not received payment from the unauthorized carrier as required by paragraph (c) of this section, the authorized carrier is not required to provide any refund or credit to the subscriber. The authorized carrier must, within 45 days of receiving an order as described in paragraph (b) of this section, inform the subscriber and the relevant governmental agency that issued the order if the unauthorized carrier has failed to forward to it the appropriate charges, and also inform the subscriber of his or her right to pursue a claim against the unauthorized carrier for a refund of all charges paid to the unauthorized carrier.

(f) Where possible, the properly authorized carrier must reinstate the subscriber in any premium program in which that subscriber was enrolled prior to the unauthorized change, if the subscriber's participation in that program was terminated because of the unauthorized change. If the subscriber has paid charges to the unauthorized carrier, the properly authorized carrier shall also provide or restore to the subscriber any premiums to which the subscriber would have been entitled had the unauthorized change not occurred. The authorized carrier must comply

with the requirements of this section regardless of whether it is able to recover from the unauthorized carrier any charges that were paid by the subscriber.

[65 FR 47693, Aug. 3, 2000]

EFFECTIVE DATE NOTE: At 65 FR 47693, Aug. 3, 2000, § 64.1170 was added, effective Sept. 5, 2000. Paragraphs (b) through (f) contain information collection requirements and will not become effective until approval by the Office of Management and Budget.

### § 64.1180 [Reserved]

### § 64.1190 Preferred carrier freezes.

(a) A preferred carrier freeze (or freeze) prevents a change in a subscriber's preferred carrier selection unless the subscriber gives the carrier from whom the freeze was requested his or her express consent. All local exchange carriers who offer preferred carrier freezes must comply with the provisions of this section.

(b) All local exchange carriers who offer preferred carrier freezes shall offer freezes on a nondiscriminatory basis to all subscribers, regardless of the subscriber's carrier selections.

(c) Preferred carrier freeze procedures, including any solicitation, must clearly distinguish among telecommunications services (*e.g.*, local exchange, intraLATA/intrastate toll, interLATA/interstate toll, and international toll) subject to a preferred carrier freeze. The carrier offering the freeze must obtain separate authorization for each service for which a preferred carrier freeze is requested.

(d) *Solicitation and imposition of preferred carrier freezes.*

(1) All carrier-provided solicitation and other materials regarding preferred carrier freezes must include:

(i) An explanation, in clear and neutral language, of what a preferred carrier freeze is and what services may be subject to a freeze;

(ii) A description of the specific procedures necessary to lift a preferred carrier freeze; an explanation that these steps are in addition to the Commission's verification rules in §§ 64.1150 and 64.1160 for changing a subscriber's preferred carrier selections; and an explanation that the subscriber will be unable to make a change in carrier selection unless he or she lifts the freeze; and

(iii) An explanation of any charges associated with the preferred carrier freeze.

(2) No local exchange carrier shall implement a preferred carrier freeze unless the subscriber's request to impose a freeze has first been confirmed in accordance with one of the following procedures:

(i) The local exchange carrier has obtained the subscriber's written and signed authorization in a form that meets the requirements of § 64.1190(d)(3); or

(ii) The local exchange carrier has obtained the subscriber's electronic authorization, placed from the telephone number(s) on which the preferred carrier freeze is to be imposed, to impose a preferred carrier freeze. The electronic authorization should confirm appropriate verification data (*e.g.*, the subscriber's date of birth or social security number) and the information required in §§ 64.1190(d)(3)(ii)(A) through (D). Telecommunications carriers electing to confirm preferred carrier freeze orders electronically shall establish one or more toll-free telephone numbers exclusively for that purpose. Calls to the number(s) will connect a subscriber to a voice response unit, or similar mechanism that records the required information regarding the preferred carrier freeze request, including automatically recording the originating automatic numbering identification; or

(iii) An appropriately qualified independent third party has obtained the subscriber's oral authorization to submit the preferred carrier freeze and confirmed the appropriate verification data (*e.g.*, the subscriber's date of birth or social security number) and the information required in § 64.1190(d)(3)(ii)(A) through (D). The independent third party must not be owned, managed, or directly controlled by the carrier or the carrier's marketing agent; must not have any financial incentive to confirm preferred carrier freeze requests for the carrier or the carrier's marketing agent; and must operate in a location physically separate from the carrier or the carrier's marketing agent. The content of

the verification must include clear and conspicuous confirmation that the subscriber has authorized a preferred carrier freeze.

(3) *Written authorization to impose a preferred carrier freeze.* A local exchange carrier may accept a subscriber's written and signed authorization to impose a freeze on his or her preferred carrier selection. Written authorization that does not conform with this section is invalid and may not be used to impose a preferred carrier freeze.

(i) The written authorization shall comply with §§ 64.1160(b), (c), and (h) of the Commission's rules concerning the form and content for letters of agency.

(ii) At a minimum, the written authorization must be printed with a readable type of sufficient size to be clearly legible and must contain clear and unambiguous language that confirms:

(A) The subscriber's billing name and address and the telephone number(s) to be covered by the preferred carrier freeze;

(B) The decision to place a preferred carrier freeze on the telephone number(s) and particular service(s). To the extent that a jurisdiction allows the imposition of preferred carrier freezes on additional preferred carrier selections (*e.g.*, for local exchange, intraLATA/intrastate toll, interLATA/interstate toll service, and international toll), the authorization must contain separate statements regarding the particular selections to be frozen;

(C) That the subscriber understands that she or he will be unable to make a change in carrier selection unless she or he lifts the preferred carrier freeze; and

(D) That the subscriber understands that any preferred carrier freeze may involve a charge to the subscriber.

(e) *Procedures for lifting preferred carrier freezes.* All local exchange carriers who offer preferred carrier freezes must, at a minimum, offer subscribers the following procedures for lifting a preferred carrier freeze:

(1) A local exchange carrier administering a preferred carrier freeze must accept a subscriber's written and signed authorization stating her or his intent to lift a preferred carrier freeze; and

(2) A local exchange carrier administering a preferred carrier freeze must accept a subscriber's oral authorization stating her or his intent to lift a preferred carrier freeze and must offer a mechanism that allows a submitting carrier to conduct a three-way conference call with the carrier administering the freeze and the subscriber in order to lift a freeze. When engaged in oral authorization to lift a preferred carrier freeze, the carrier administering the freeze shall confirm appropriate verification data (*e.g.*, the subscriber's date of birth or social security number) and the subscriber's intent to lift the particular freeze.

[64 FR 7762, Feb. 16, 1999]

## Subpart L—Restrictions on Telephone Solicitation

### § 64.1200 Delivery restrictions.

(a) No person may:

(1) Initiate any telephone call (other than a call made for emergency purposes or made with the prior express consent of the called party) using an automatic telephone dialing system or an artificial or prerecorded voice,

(i) To any emergency telephone line, including any 911 line and any emergency line of a hospital, medical physician or service office, health care facility, poison control center, or fire protection or law enforcement agency;

(ii) To the telephone line of any guest room or patient room of a hospital, health care facility, elderly home, or similar establishment; or

(iii) To any telephone number assigned to a paging service, cellular telephone service, specialized mobile radio service, or other radio common carrier service, or any service for which the called party is charged for the call;

(2) Initiate any telephone call to any residential telephone line using an artificial or prerecorded voice to deliver a message without the prior express consent of the called party, unless the call is initiated for emergency purposes or is exempted by § 64.1200(c) of this section.

(3) Use a telephone facsimile machine, computer, or other device to

send an unsolicited advertisement to a telephone facsimile machine.

(4) Use an automatic telephone dialing system in such a way that two or more telephone lines of a multi-line business are engaged simultaneously.

(b) For the purpose of § 64.1200(a) of this section, the term *emergency purposes* means calls made necessary in any situation affecting the health and safety of consumers.

(c) The term *telephone call* in § 64.1200(a)(2) of this section shall not include a call or message by, or on behalf of, a caller:

(1) That is not made for a commercial purpose,

(2) That is made for a commercial purpose but does not include the transmission of any unsolicited advertisement,

(3) To any person with whom the caller has an established business relationship at the time the call is made, or

(4) Which is a tax-exempt nonprofit organization.

(d) All artificial or prerecorded telephone messages delivered by an automatic telephone dialing system shall:

(1) At the beginning of the message, state clearly the identity of the business, individual, or other entity initiating the call, and

(2) During or after the message, state clearly the telephone number (other than that of the autodialer or prerecorded message player which placed the call) or address of such business, other entity, or individual.

(e) No person or entity shall initiate any telephone solicitation to a residential telephone subscriber:

(1) Before the hour of 8 a.m. or after 9 p.m. (local time at the called party's location), and

(2) Unless such person or entity has instituted procedures for maintaining a list of persons who do not wish to receive telephone solicitations made by or on behalf of that person or entity. The procedures instituted must meet the following minimum standards:

(i) *Written policy.* Persons or entities making telephone solicitations must have a written policy, available upon demand, for maintaining a do-not-call list.

(ii) *Training of personnel engaged in telephone solicitation.* Personnel engaged in any aspect of telephone solicitation must be informed and trained in the existence and use of the do-not-call list.

(iii) *Recording, disclosure of do-not-call requests.* If a person or entity making a telephone solicitation (or on whose behalf a solicitation is made) receives a request from a residential telephone subscriber not to receive calls from that person or entity, the person or entity must record the request and place the subscriber's name and telephone number on the do-not-call list at the time the request is made. If such requests are recorded or maintained by a party other than the person or entity on whose behalf the solicitation is made, the person or entity on whose behalf the solicitation is made will be liable for any failures to honor the do-not-call request. In order to protect the consumer's privacy, persons or entities must obtain a consumer's prior express consent to share or forward the consumer's request not to be called to a party other than the person or entity on whose behalf a solicitation is made or an affiliated entity.

(iv) *Identification of telephone solicitor.* A person or entity making a telephone solicitation must provide the called party with the name of the individual caller, the name of the person or entity on whose behalf the call is being made, and a telephone number or address at which the person or entity may be contacted. If a person or entity makes a solicitation using an artificial or prerecorded voice message transmitted by an autodialer, the person or entity must provide a telephone number other than that of the autodialer or prerecorded message player which placed the call. The telephone number provided may not be a 900 number or any other number for which charges exceed local or long distance transmission charges.

(v) *Affiliated persons or entities.* In the absence of a specific request by the subscriber to the contrary, a residential subscriber's do-not-call request shall apply to the particular business entity making the call (or on whose behalf a call is made), and will not apply

to affiliated entities unless the consumer reasonably would expect them to be included given the identification of the caller and the product being advertised.

(vi) *Maintenance of do-not-call lists.* A person or entity making telephone solicitations must maintain a record of a caller's request not to receive future telephone solicitations. A do not call request must be honored for 10 years from the time the request is made.

(f) As used in this section:

(1) The terms *automatic telephone dialing system* and *autodialer* mean equipment which has the capacity to store or produce telephone numbers to be called using a random or sequential number generator and to dial such numbers.

(2) The term *telephone facsimile machine* means equipment which has the capacity to transcribe text or images, or both, from paper into an electronic signal and to transmit that signal over a regular telephone line, or to transcribe text or images (or both) from an electronic signal received over a regular telephone line onto paper.

(3) The term *telephone solicitation* means the initiation of a telephone call or message for the purpose of encouraging the purchase or rental of, or investment in, property, goods, or services, which is transmitted to any person, but such term does not include a call or message:

(i) To any person with that person's prior express invitation or permission;

(ii) To any person with whom the caller has an established business relationship; or

(iii) By or on behalf of a tax-exempt nonprofit organization.

(4) The term *established business relationship* means a prior or existing relationship formed by a voluntary two-way communication between a person or entity and a residential subscriber with or without an exchange of consideration, on the basis of an inquiry, application, purchase or transaction by the residential subscriber regarding products or services offered by such person or entity, which relationship has not been previously terminated by either party.

(5) The term *unsolicited advertisement* means any material advertising the commercial availability or quality of any property, goods, or services which is transmitted to any person without that person's prior express invitation or permission.

[57 FR 48335, Oct. 23, 1992; 57 FR 53293, Nov. 9, 1992, as amended at 60 FR 42069, Aug. 15, 1995]

### § 64.1201 Restrictions on billing name and address disclosure.

(a) As used in this section:

(1) The term *billing name and address* means the name and address provided to a local exchange company by each of its local exchange customers to which the local exchange company directs bills for its services.

(2) The term ''telecommunications service provider'' means interexchange carriers, operator service providers, enhanced service providers, and any other provider of interstate telecommunications services.

(3) The term *authorized billing agent* means a third party hired by a telecommunications service provider to perform billing and collection services for the telecommunications service provider.

(4) The term *bulk basis* means billing name and address information for all the local exchange service subscribers of a local exchange carrier.

(5) The term *LEC joint use card* means a calling card bearing an account number assigned by a local exchange carrier, used for the services of the local exchange carrier and a designated interexchange carrier, and validated by access to data maintained by the local exchange carrier.

(b) No local exchange carrier providing billing name and address shall disclose billing name and address information to any party other than a telecommunications service provider or an authorized billing and collection agent of a telecommunications service provider.

(c)(1) No telecommunications service provider or authorized billing and collection agent of a telecommunications service provider shall use billing name and address information for any purpose other than the following:

(i) Billing customers for using telecommunications services of that service provider and collecting amounts due;

(ii) Any purpose associated with the ''equal access'' requirement of *United States* v. *AT&T* 552 F.Supp. 131 (D.D.C. 1982); and

(iii) Verification of service orders of new customers, identification of customers who have moved to a new address, fraud prevention, and similar nonmarketing purposes.

(2) In no case shall any telecommunications service provider or authorized billing and collection agent of a telecommunications service provider disclose the billing name and address information of any subscriber to any third party, except that a telecommunications service provider may disclose billing name and address information to its authorized billing and collection agent.

(d) [Reserved]

(e)(1) All local exchange carriers providing billing name and address information shall notify their subscribers that:

(i) The subscriber's billing name and address will be disclosed, pursuant to Policies and Rules Concerning Local Exchange Carrier Validation and Billing Information for Joint Use Calling Cards, CC Docket No. 91–115, FCC 93–254, adopted May 13, 1993, whenever the subscriber uses a LEC joint use card to pay for services obtained from the telecommunications service provider, and

(ii) The subscriber's billing name and address will be disclosed, pursuant to Policies and Rules Concerning Local Exchange Carrier Validation and Billing Information for Joint Use Calling Cards, CC Docket No. 91–115, FCC 93–254, adopted May 13, 1993, whenever the subscriber accepts a third party or collect call to a telephone station provided by the LEC to the subscriber.

(2) In addition to the notification specified in paragraph (e)(1) of this section, all local exchange carriers providing billing name and address information shall notify their subscribers with unlisted or nonpublished telephone numbers that:

(i) Customers have a right to request that their BNA not be disclosed, and that customers may prevent BNA disclosure for third party and collect calls as well as calling card calls;

(ii) LECs will presume that unlisted and nonpublished end users consent to disclosure and use of their BNA if customers do not affirmatively request that their BNA not be disclosed; and

(iii) The presumption in favor of consent for disclosure will begin 30 days after customers receive notice.

(3) No local exchange carrier shall disclose the billing name and address information associated with any calling card call made by any subscriber who has affirmatively withheld consent for disclosure of BNA information, or for any third party or collect call charged to any subscriber who has affirmatively withheld consent for disclosure of BNA information.

[53 FR 36145, July 6, 1993, as amended at 58 FR 65671, Dec. 16, 1993; 61 FR 8880, Mar. 6, 1996]

## Subpart M—Provision of Payphone Service

### § 64.1300 Payphone compensation obligation.

(a) Except as provided herein, every carrier to whom a completed call from a payphone is routed shall compensate the payphone service provider for the call at a rate agreed upon by the parties by contract.

(b) The compensation obligation set forth herein shall not apply to calls to emergency numbers, calls by hearing disabled persons to a telecommunications relay service or local calls for which the caller has made the required coin deposit.

(c) In the absence of an agreement as required by paragraph (a) of this section, the carrier is obligated to compensate the payphone service provider at a per-call rate of $.24.

[61 FR 52324, Oct. 7, 1996, as amended at 62 FR 58686, Oct. 30, 1997; 64 FR 13719, Mar. 22, 1999]

### § 64.1310 Payphone compensation payment procedures.

(a) It is the responsibility of each carrier to whom a compensable call from a payphone is routed to track, or arrange for the tracking of, each such call so that it may accurately compute the compensation required by Section 64.1300(a).

(b) Carriers and payphone service providers shall establish arrangements

for the billing and collection of compensation for calls subject to Section 64.1300(a).

(c) Local Exchange Carriers must provide to carriers required to pay compensation pursuant to Section 64.1300(a) a list of payphone numbers in their service areas. The list must be provided on a quarterly basis. Local Exchange Carriers must verify disputed numbers in a timely manner, and must maintain verification data for 18 months after close of the compensation period.

(d) Local Exchange Carriers must respond to all carrier requests for payphone number verification in connection with the compensation requirements herein, even if such verification is a negative response.

(e) A payphone service provider that seeks compensation for payphones that are not included on the Local Exchange Carrier's list satisfies its obligation to provide alternative reasonable verification to a payor carrier if it provides to that carrier:

(1) A notarized affidavit attesting that each of the payphones for which the payphone service provider seeks compensation is a payphone that was in working order as of the last day of the compensation period; and

(2) Corroborating evidence that each such payphone is owned by the payphone service provider seeking compensation and was in working order on the last day of the compensation period. Corroborating evidence shall include, at a minimum, the telephone bill for the last month of the billing quarter indicating use of a line screening service.

[61 FR 52324, Oct. 7, 1996]

### § 64.1320 Payphone compensation verification and reports.

(a) Carriers subject to payment of compensation pursuant to Section 64.1300(a) shall conduct an annual verification of calls routed to them that are subject to such compensation and file a report with the Chief, Common Carrier Bureau within 90 days of the end of the calendar year, provided, however, that such verification and report shall not be required for calls received after December 31, 1998.

(b) The annual verification required in this section shall list the total amount of compensation paid to payphone service providers for intrastate, interstate and international calls, the number of compensable calls received by the carrier and the number of payees.

[61 FR 52324, Oct. 7, 1996]

### § 64.1330 State review of payphone entry and exit regulations and public interest payphones.

(a) Each state must review and remove any of its regulations applicable to payphones and payphone service providers that impose market entry or exit requirements.

(b) Each state must ensure that access to dialtone, emergency calls, and telecommunications relay service calls for the hearing disabled is available from all payphones at no charge to the caller.

(c) Each state must review its rules and policies to determine whether it has provided for public interest payphones consistent with applicable Commission guidelines, evaluate whether it needs to take measures to ensure that such payphones will continue to exist in light of the Commission's implementation of Section 276 of the Communications Act, and administer and fund such programs so that such payphones are supported fairly and equitably. This review must be completed by September 20, 1998.

[61 FR 52323, Oct. 7, 1996]

### § 64.1340 Right to negotiate.

Unless prohibited by Commission order, payphone service providers have the right to negotiate with the location provider on the location provider's selecting and contracting with, and, subject to the terms of any agreement with the location provider, to select and contract with, the carriers that carry interLATA and intraLATA calls from their payphones.

[61 FR 52323, Oct. 7, 1996]

## Subpart N—Expanded Interconnection

### § 64.1401 Expanded interconnection.

(a) Every local exchange carrier that is classified as a Class A company under § 32.11 of this chapter and that is not a National Exchange Carrier Association interstate tariff participant, as provided in part 69, subpart G of this chapter, shall offer expanded interconnection for interstate special access services at their central offices that are classified as end offices or serving wire centers, and at other rating points used for interstate special access.

(b) The local exchange carriers specified in paragraph (a) of this section shall offer expanded interconnection for interstate switched transport services:

(1) In their central offices that are classified as end offices or serving wire centers, as well as at all tandem offices housed in buildings containing such carriers' end offices or serving wire centers for which interstate switched transport expanded interconnection has been tariffed;

(2) Upon *bona fide* request, in tandem offices housed in buildings not containing such carriers' end offices or serving wire centers, or in buildings containing the carriers' end offices or serving wire centers for which interstate switched transport expanded interconnection has not been tariffed; and

(3) Upon *bona fide* request, at remote nodes/switches that serve as rating points for interstate switched transport and that are capable of routing outgoing interexchange access traffic to interconnectors and in which interconnectors can route terminating traffic to such carriers. No such carrier is required to enhance remote nodes/switches or to build additional space to accommodate interstate switched transport expanded interconnection at these locations.

(c) The local exchange carriers specified in paragraph (a) of this section shall offer expanded interconnection for interstate special access and switched transport services through virtual collocation, except that they may offer physical collocation, instead of virtual collocation, in specific central offices, as a service subject to nonstreamlined communications common carrier regulation under Title II of the Communications Act (47 U.S.C. 201–228).

(d) For the purposes of this subpart, physical collocation means an offering that enables interconnectors:

(1) To place their own equipment needed to terminate basic transmission facilities, including optical terminating equipment and multiplexers, within or upon the local exchange carrier's central office buildings;

(2) To use such equipment to connect interconnectors' fiber optic systems or microwave radio transmission facilities (where reasonably feasible) with the local exchange carrier's equipment and facilities used to provide interstate special access services;

(3) To enter the local exchange carrier's central office buildings, subject to reasonable terms and conditions, to install, maintain, and repair the equipment described in paragraph (d)(1) of this section; and

(4) To obtain reasonable amounts of space in central offices for the equipment described in paragraph (d)(1) of this section, allocated on a first-come, first-served basis.

(e) For purposes of this subpart, virtual collocation means an offering that enables interconnectors:

(1) To designate or specify equipment needed to terminate basic transmission facilities, including optical terminating equipment and multiplexers, to be located within or upon the local exchange carrier's buildings, and dedicated to such interconnectors' use,

(2) To use such equipment to connect interconnectors' fiber optic systems or microwave radio transmission facilities (where reasonably feasible) with the local exchange carrier's equipment and facilities used to provide interstate special and switched access services, and

(3) To monitor and control their communications channels terminating in such equipment.

(f) Under both physical collocation offering and virtual collocation offerings for expanded interconnection of fiber optic facilities, local exchange carriers shall provide:

(1) An interconnection point or points at which the fiber optic cable carrying an interconnectors' circuits can enter each local exchange carrier location, provided that the local exchange carrier shall designate interconnection points as close as reasonably possible to each location; and

(2) At least two such interconnection points at any local exchange carrier location at which there are at least two entry points for the local exchange carrier's cable facilities, and space is available for new facilities in at least two of those entry points.

(g) The local exchange carriers specified in paragraph (a) of this section shall offer signalling for tandem switching, as defined in § 69.2(vv) of this chapter, at central offices that are classified as equal office end offices or serving wire centers, or at signal transfer points if such information is offered via common channel signalling.

[57 FR 54331, Nov. 18, 1992, as amended at 58 FR 48762, Sept. 17, 1993; 59 FR 32930, June 27, 1994; 59 FR 38930, Aug. 1, 1994]

### § 64.1402 Rights and responsibilities of interconnectors.

(a) For the purposes of this subpart, an interconnector means a party taking expanded interconnection offerings. Any party shall be eligible to be an interconnector.

(b) Interconnectors shall have the right, under expanded interconnection, to interconnect their fiber optic systems and, where reasonably feasible, their microwave transmission facilities.

(c) Interconnectors shall not be allowed to use interstate special access expanded interconnection offerings to connect their transmission facilities with the local exchange carrier's interstate switched services until that local exchange carrier's tariffs implementing expanded interconnection for switched transport have become effective.

[57 FR 54331, Nov. 18, 1992, as amended at 61 FR 43160, Aug. 21, 1996]

## Subpart O—Interstate Pay-Per-Call and Other Information Services

SOURCE: 58 FR 44773, Aug. 25, 1993, unless otherwise noted.

### § 64.1501 Definitions.

For purposes of this subpart, the following definitions shall apply:

(a) *Pay-per-call service* means any service:

(1) In which any person provides or purports to provide:

(i) Audio information or audio entertainment produced or packaged by such person;

(ii) Access to simultaneous voice conversation services; or

(iii) Any service, including the provision of a product, the charges for which are assessed on the basis of the completion of the call;

(2) For which the caller pays a per-call or per-time-interval charge that is greater than, or in addition to, the charge for transmission of the call; and

(3) Which is accessed through use of a 900 number;

(4) Provided, however, such term does not include directory services provided by a common carrier or its affiliate or by a local exchange carrier or its affiliate, or any service for which users are assessed charges only after entering into a presubscription or comparable arrangement with the provider of such service.

(b) *Presubscription or comparable arrangement* means a contractual agreement in which:

(1) The service provider clearly and conspicuously discloses to the consumer all material terms and conditions associated with the use of the service, including the service provider's name and address, a business telephone number which the consumer may use to obtain additional information or to register a complaint, and the rates for the service;

(2) The service provider agrees to notify the consumer of any future rate changes;

(3) The consumer agrees to use the service on the terms and conditions disclosed by the service provider; and

(4) The service provider requires the use of an identification number or other means to prevent unauthorized access to the service by nonsubscribers;

(5) Provided, however, that disclosure of a credit, prepaid account, debit, charge, or calling card number, along with authorization to bill that number, made during the course of a call to an information service shall constitute a presubscription or comparable arrangement if an introductory message containing the information specified in § 64.1504(c)(2) is provided prior to, and independent of, assessment of any charges. No other action taken by a consumer during the course of a call to an information service, for which charges are assessed, can create a presubscription or comparable arrangement.

(6) Provided, that a presubscription arrangement to obtain information services provided by means of a toll-free number shall conform to the requirements of § 64.1504(c).

(c) *Calling card* means an identifying number or code unique to the individual, that is issued to the individual by a common carrier and enables the individual to be charged by means of a phone bill for charges incurred independent of where the call originates.

[61 FR 39087, July 26, 1996]

### § 64.1502 Limitations on the provision of pay-per-call services.

Any common carrier assigning a telephone number to a provider of interstate pay-per-call service shall require, by contract or tariff, that such provider comply with the provisions of this subpart and of titles II and III of the Telephone Disclosure and Dispute Resolution Act (Pub. L. No. 102–556) (TDDRA) and the regulations prescribed by the Federal Trade Commission pursuant to those titles.

### § 64.1503 Termination of pay-per-call and other information programs.

(a) Any common carrier assigning a telephone number to a provider of interstate pay-per-call service shall specify by contract or tariff that pay-per-call programs not in compliance with § 64.1502 shall be terminated following written notice to the information provider. The information provider shall be afforded a period of no less than seven and no more than 14 days during which a program may be brought into compliance. Programs not in compliance at the expiration of such period shall be terminated immediately.

(b) Any common carrier providing transmission or billing and collection services to a provider of interstate information service through any 800 telephone number, or other telephone number advertised or widely understood to be toll-free, shall promptly investigate any complaint that such service is not provided in accordance with § 64.1504 or § 64.1510(c), and, if the carrier reasonably determines that the complaint is valid, may terminate the provision of service to an information provider unless the provider supplies evidence of a written agreement that meets the requirements of this § 64.1504(c)(1).

[61 FR 39087, July 26, 1996]

### § 64.1504 Restrictions on the use of toll-free numbers.

A common carrier shall prohibit by tariff or contract the use of any 800 telephone number, or other telephone number advertised or widely understood to be toll-free, in a manner that would result in:

(a) The calling party or the subscriber to the originating line being assessed, by virtue of completing the call, a charge for a call;

(b) The calling party being connected to a pay-per-call service;

(c) The calling party being charged for information conveyed during the call unless:

(1) The calling party has a written agreement (including an agreement transmitted through electronic medium) that specifies the material terms and conditions under which the information is offered and includes:

(i) The rate at which charges are assessed for the information;

(ii) The information provider's name;

(iii) The information provider's business address;

(iv) The information provider's regular business telephone number;

(v) The information provider's agreement to notify the subscriber at least

one billing cycle in advance of all future changes in the rates charged for the information;

(vi) The subscriber's choice of payment method, which may be by direct remit, debit, prepaid account, phone bill, or credit or calling card and, if a subscriber elects to pay by means of phone bill, a clear explanation that the subscriber will be assessed for calls made to the information service from the subscriber's phone line;

(vii) A unique personal identification number or other subscriber-specific identifier that must be used to obtain access to the information service and instructions on its use, and, in addition, assures that any charges for services accessed by use of the subscriber's personal identification number or subscriber-specific identifier be assessed to subscriber's source of payment elected pursuant to paragraph (c)(1)(vi) of this section; or

(2) The calling party is charged for the information by means of a credit, prepaid, debit, charge, or calling card and the information service provider includes in response to each call an introductory message that:

(i) Clearly states that there is a charge for the call;

(ii) Clearly states the service's total cost per minute and any other fees for the service or for any service to which the caller may be transferred;

(iii) Explains that the charges must be billed on either a credit, prepaid, debit, charge, or calling card;

(iv) Asks the caller for the card number;

(v) Clearly states that charges for the call begin at the end of the introductory message; and

(vi) Clearly states that the caller can hang at or before the end of the introductory message without incurring any charge whatsoever.

(d) The calling party being called back collect for the provision of audio or data information services, simultaneous voice conversation services, or products; and

(e) The calling party being assessed by virtue of the caller being asked to connect or otherwise transfer to a pay-per-call service, a charge for the call.

(f) Provided, however, that:

(1) Notwithstanding paragraph (c)(1) of this section, a written agreement that meets the requirements of that paragraph is not required for:

(i) Calls utilizing telecommunications devices for the deaf;

(ii) Directory services provided by a common carrier or its affiliate or by a local exchange carrier or its affiliate; or

(iii) Any purchase of goods or of services that are not information services.

(2) The requirements of paragraph (c)(2) of this section shall not apply to calls from repeat callers using a bypass mechanism to avoid listening to the introductory message: *Provided*, That information providers shall disable such a bypass mechanism after the institution of any price increase for a period of time determined to be sufficient by the Federal Trade Commission to give callers adequate and sufficient notice of a price increase.

[61 FR 39087, July 26, 1996]

### § 64.1505 Restrictions on collect telephone calls.

(a) No common carrier shall provide interstate transmission or billing and collection services to an entity offering any service within the scope of § 64.1501(a)(1) that is billed to a subscriber on a collect basis at a per-call or per-time-interval charge that is greater than, or in addition to, the charge for transmission of the call.

(b) No common carrier shall provide interstate transmission services for any collect information services billed to a subscriber at a tariffed rate unless the called party has taken affirmative action clearly indicating that it accepts the charges for the collect service.

### § 64.1506 Number designation.

Any interstate service described in § 64.1501(a)(1)–(2), and not subject to the exclusions contained in § 64.1501(a)(4), shall be offered only through telephone numbers beginning with a 900 service access code.

[59 FR 46770, Sept. 12, 1994]

### § 64.1507 Prohibition on disconnection or interruption of service for failure to remit pay-per-call and similar service charges.

No common carrier shall disconnect or interrupt in any manner, or order the disconnection or interruption of, a telephone subscriber's local exchange or long distance telephone service as a result of that subscriber's failure to pay:

(a) Charges for interstate pay-per-call service;

(b) Charges for interstate information services provided pursuant to a presubscription or comparable arrangement; or

(c) Charges for interstate information services provided on a collect basis which have been disputed by the subscriber.

[58 FR 44773, Aug. 25, 1993, as amended at 59 FR 46770, Sept. 12, 1994]

### § 64.1508 Blocking access to 900 service.

(a) Local exchange carriers must offer to their subscribers, where technically feasible, an option to block access to services offered on the 900 service access code. Blocking is to be offered at no charge, on a one-time basis, to:

(1) All telephone subscribers during the period from November 1, 1993 through December 31, 1993; and

(2) Any subscriber who subscribes to a new telephone number for a period of 60 days after the new number is effective.

(b) For blocking requests not within the one-time option or outside the time frames specified in paragraph (a) of this section, and for unblocking requests, local exchange carriers may charge a reasonable one-time fee. Requests by subscribers to remove 900 services blocking must be in writing.

(c) The terms and conditions under which subscribers may obtain 900 services blocking are to be included in tariffs filed with this Commission.

### § 64.1509 Disclosure and dissemination of pay-per-call information.

(a) Any common carrier assigning a telephone number to a provider of interstate pay-per-call services shall make readily available, at no charge, to Federal and State agencies and all other interested persons:

(1) A list of the telephone numbers for each of the pay-per-call services it carries;

(2) A short description of each such service;

(3) A statement of the total cost or the cost per minute and any other fees for each such service; and

(4) A statement of the pay-per-call service provider's name, business address, and business telephone number.

(b) Any common carrier assigning a telephone number to a provider of interstate pay-per-call services and offering billing and collection services to such provider shall:

(1) Establish a local or toll-free telephone number to answer questions and provide information on subscribers' rights and obligations with regard to their use of pay-per-call services and to provide to callers the name and mailing address of any provider of pay-per-call services offered by that carrier; and

(2) Provide to all its telephone subscribers, either directly or through contract with any local exchange carrier providing billing and collection services to that carrier, a disclosure statement setting forth all rights and obligations of the subscriber and the carrier with respect to the use and payment of pay-per-call services. Such statement must include the prohibition against disconnection of basic communications services for failure to pay pay-per-call charges established by § 64.1507, the right of a subscriber to obtain blocking in accordance with § 64.1508, the right of a subscriber not to be billed for pay-per-call services not offered in compliance with federal laws and regulations established by § 64.1510(a)(1), and the possibility that a subscriber's access to 900 services may be involuntarily blocked pursuant to § 64.1512 for failure to pay legitimate pay-per-call charges. Disclosure statements must be forwarded to:

(i) All telephone subscribers no later than 60 days after these regulations take effect;

(ii) All new telephone subscribers no later than 60 days after service is established;

(iii) All telephone subscribers requesting service at a new location no later than 60 days after service is established; and

(iv) Thereafter, to all subscribers at least once per calendar year, at intervals of not less than 6 months nor more than 18 months.

[58 FR 44773, Aug. 25, 1993, as amended at 61 FR 55582, Oct. 28, 1996]

### § 64.1510 Billing and collection of pay-per-call and similar service charges.

(a) Any common carrier assigning a telephone number to a provider of interstate pay-per-call services and offering billing and collection services to such provider shall:

(1) Ensure that a subscriber is not billed for interstate pay-per-call services that such carrier knows or reasonably should know were provided in violation of the regulations set forth in this subpart or prescribed by the Federal Trade Commission pursuant to titles II or III of the TDDRA or any other federal law;

(2) In any billing to telephone subscribers that includes charges for any interstate pay-per-call service:

(i) Include a statement indicating that:

(A) Such charges are for non-communications services;

(B) Neither local nor long distances services can be disconnected for non-payment although an information provider may employ private entities to seek to collect such charges;

(C) 900 number blocking is available upon request; and

(D) Access to pay-per-call services may be involuntarily blocked for failure to pay legitimate charges;

(ii) Display any charges for pay-per-call services in a part of the bill that is identified as not being related to local and long distance telephone charges;

(iii) Specify, for each pay-per-call charge made, the type of service, the amount of the charge, and the date, time, and, for calls billed on a time-sensitive basis, the duration of the call; and

(iv) Identify the local or toll-free number established in accordance with § 64.1509(b)(1).

(b) Any common carrier offering billing and collection services to an entity providing interstate information services on a collect basis shall, to the extent possible, display the billing information in the manner described in paragraphs (a)(2)(i), (A), (B), (D) and (a)(2)(ii) of this section.

(c) If a subscriber elects, pursuant to § 64.1504(c)(1)(vi), to pay by means of a phone bill for any information service provided by through any 800 telephone number, or other telephone number advertised or widely understood to be toll-free, the phone bill shall:

(1) Include, in prominent type, the following disclaimer: ''Common carriers may not disconnect local or long distance telephone service for failure to pay disputed charges for information services;'' and

(2) Clearly list the 800 or other toll-free number dialed.

[58 FR 44773, Aug. 25, 1993, as amended at 59 FR 46771, Sept. 12, 1994; 61 FR 39088, July 26, 1996]

### § 64.1511 Forgiveness of charges and refunds.

(a) Any carrier assigning a telephone number to a provider of interstate pay-per-call services or providing transmission for interstate information services provided pursuant to a presubscription or comparable arrangement or on a collect basis, and providing billing and collection for such services, shall establish procedures for the handling of subscriber complaints regarding charges for those services. A billing carrier is afforded discretion to set standards for determining when a subscriber's complaint warrants forgiveness, refund or credit of interstate pay-per-call or information services charges provided that such charges must be forgiven, refunded, or credited when a subscriber has complained about such charges and either this Commission, the Federal Trade Commission, or a court of competent jurisdiction has found or the carrier has determined, upon investigation, that the service has been offered in violation of federal law or the regulations that are either set forth in this subpart or prescribed by the Federal Trade Commission pursuant to titles II or III of the TDDRA. Carriers shall observe the record retention requirements set forth

in § 42.6 of this chapter except that relevant records shall be retained by carriers beyond the requirements of part 42 of this chapter when a complaint is pending at the time the specified retention period expires.

(b) Any carrier assigning a telephone number to a provider of interstate pay-per-call services but not providing billing and collection services for such services, shall, by tariff or contract, require that the provider and/or its billing and collection agents have in place procedures whereby, upon complaint, pay-per-call charges may be forgiven, refunded, or credited, provided that such charges must be forgiven, refunded, or credited when a subscriber has complained about such charges and either this Commission, the Federal Trade Commission, or a court of competent jurisdiction has found or the carrier has determined, upon investigation, that the service has been offered in violation of federal law or the regulations that are either set forth in this subpart or prescribed by the Federal Trade Commission pursuant to titles II or III of the TDDRA.

[58 FR 44773, Aug. 25, 1993, as amended at 59 FR 46771, Sept. 12, 1994]

### § 64.1512 Involuntary blocking of pay-per-call services.

Nothing in this subpart shall preclude a common carrier or information provider from blocking or ordering the blocking of its interstate pay-per-call programs from numbers assigned to subscribers who have incurred, but not paid, legitimate pay-per-call charges, except that a subscriber who has filed a complaint regarding a particular pay-per-call program pursuant to procedures established by the Federal Trade Commission under title III of the TDDRA shall not be involuntarily blocked from access to that program while such a complaint is pending. This restriction is not intended to preclude involuntary blocking when a carrier or IP has decided in one instance to sustain charges against a subscriber but that subscriber files additional separate complaints.

### § 64.1513 Verification of charitable status.

Any common carrier assigning a telephone number to a provider of interstate pay-per-call services that the carrier knows or reasonably should know is engaged in soliciting charitable contributions shall obtain verification that the entity or individual for whom contributions are solicited has been granted tax exempt status by the Internal Revenue Service.

### § 64.1514 Generation of signalling tones.

No common carrier shall assign a telephone number for any pay-per-call service that employs broadcast advertising which generates the audible tones necessary to complete a call to a pay-per-call service.

### § 64.1515 Recovery of costs.

No common carrier shall recover its cost of complying with the provisions of this subpart from local or long distance ratepayers.

## Subpart P—Calling Party Telephone Number; Privacy

SOURCE: 59 FR 18319, Apr. 18, 1994, unless otherwise noted.

### § 64.1600 Definitions.

(a) *Aggregate information.* The term ''aggregate information'' means collective data that relate to a group or category of services or customers, from which individual customer identities or characteristics have been removed.

(b) *ANI.* The term ''ANI'' (automatic number identification) refers to the delivery of the calling party's billing number by a local exchange carrier to any interconnecting carrier for billing or routing purposes, and to the subsequent delivery of such number to end users.

(c) *Calling party number.* The term ''Calling Party Number'' refers to the subscriber line number or the directory number contained in the calling party number parameter of the call set-up message associated with an interstate call on a Signaling System 7 network.

(d) *Charge number.* The term ''charge number'' refers to the delivery of the calling party's billing number in a Signaling System 7 environment by a local exchange carrier to any interconnecting carrier for billing or routing purposes, and to the subsequent delivery of such number to end users.

(e) *Privacy indicator.* The term ''Privacy Indicator'' refers to information, contained in the calling party number parameter of the call set-up message associated with an interstate call on an Signaling System 7 network, that indicates whether the calling party authorizes presentation of the calling party number to the called party.

(f) *Signaling System 7.* The term ''Signaling System 7'' (SS7) refers to a carrier to carrier out-of-band signaling network used for call routing, billing and management.

[60 FR 29490, June 5, 1995]

### § 64.1601 Delivery requirements and privacy restrictions.

(a) *Delivery.* Except as provided in paragraph (d) of this section, common carriers using Signaling System 7 and offering or subscribing to any service based on Signaling System 7 functionality are required to transmit the calling party number (CPN) associated with an interstate call to interconnecting carriers.

(b) *Privacy.* Except as provided in paragraph (d) of this section, originating carriers using Signaling System 7 and offering or subscribing to any service based on Signaling System 7 functionality will recognize *67 dialed as the first three digits of a call (or 1167 for rotary or pulse dialing phones) as a caller's request that the CPN not be passed on an interstate call. Such carriers providing line blocking services will recognize *82 as a caller's request that the CPN be passed on an interstate call. No common carrier subscribing to or offering any service that delivers CPN may override the privacy indicator associated with an interstate call. Carriers must arrange their CPN-based services, and billing practices, in such a manner that when a caller requests that the CPN not be passed, a carrier may not reveal that caller's number or name, nor may the carrier use the number or name to allow the called party to contact the calling party. The terminating carrier must act in accordance with the privacy indicator unless the call is made to a called party that subscribes to an ANI or charge number based service and the call is paid for by the called party.

(c) *Charges.* No common carrier subscribing to or offering any service that delivers calling party number may

(1) Impose on the calling party charges associated with per call blocking of the calling party's telephone number, or

(2) Impose charges upon connecting carriers for the delivery of the calling party number parameter or its associated privacy indicator.

(d) *Exemptions.* Section 64.1601(a) and (b) shall not apply when:

(1) A call originates from a payphone.

(2) A local exchange carrier with Signaling System 7 capability does not have the software to provide *67 or *82 functionalities. Such carriers are prohibited from passing CPN.

(3) A Private Branch Exchange or Centrex system does not pass end user CPN. Centrex systems that rely on *6 or *8 for a function other than CPN blocking or unblocking, respectively, are also exempt if they employ alternative means of blocking or unblocking.

(4) CPN delivery—

(i) Is used solely in connection with calls within the same limited system, including (but not limited to) a Centrex system, virtual private network, or Private Branch Exchange;

(ii) Is used on a public agency's emergency telephone line or in conjunction with 911 emergency services, or on any entity's emergency assistance poison control telephone line; or

(iii) Is provided in connection with legally authorized call tracing or trapping procedures specifically requested by a law enforcement agency.

[60 FR 29490, June 5, 1995; 60 FR 54449, Oct. 24, 1995, as amended at 62 FR 34015, June 24, 1997]

### § 64.1602 Restrictions on use and sale of telephone subscriber information provided pursuant to automatic number identification or charge number services.

(a) Any common carrier providing Automatic Number Identification or

charge number services on interstate calls to any person shall provide such services under a contract or tariff containing telephone subscriber information requirements that comply with this subpart. Such requirements shall:

(1) Permit such person to use the telephone number and billing information for billing and collection, routing, screening, and completion of the originating telephone subscriber's call or transaction, or for services directly related to the originating telephone subscriber's call or transaction;

(2) Prohibit such person from reusing or selling the telephone number or billing information without first

(i) Notifying the originating telephone subscriber and,

(ii) Obtaining the affirmative consent of such subscriber for such reuse or sale; and,

(3) Prohibit such person from disclosing, except as permitted by paragraphs (a) (1) and (2) of this section, any information derived from the automatic number identification or charge number service for any purpose other than

(i) Performing the services or transactions that are the subject of the originating telephone subscriber's call,

(ii) Ensuring network performance security, and the effectiveness of call delivery,

(iii) Compiling, using, and disclosing aggregate information, and

(iv) Complying with applicable law or legal process.

(b) The requirements imposed under paragraph (a) of the section shall not prevent a person to whom automatic number identification or charge number services are provided from using

(1) The telephone number and billing information provided pursuant to such service, and

(2) Any information derived from the automatic number identification or charge number service, or from the analysis of the characteristics of a telecommunications transmission, to offer a product or service that is directly related to the products or services previously acquired by that customer from such person. Use of such information is subject to the requirements of 47 CFR 64.1200 and 64.1504(c).

[60 FR 29490, June 5, 1995]

### § 64.1603 Customer notification.

Any common carrier participating in the offering of services providing calling party number, ANI, or charge number on interstate calls must notify its subscribers, individually or in conjunction with other carriers, that their telephone numbers may be identified to a called party. Such notification must be made not later than December 1, 1995, and at such times thereafter as to ensure notice to subscribers. The notification must be effective in informing subscribers how to maintain privacy by dialing *67 (or 1167 for rotary or pulse-dialing phones) on interstate calls. The notice shall inform subscribers whether dialing *82 (or 1182 for rotary or pulse-dialing phones) on interstate calls is necessary to present calling party number to called parties. For ANI or charge number services for which such privacy is not provided, the notification shall inform subscribers of the restrictions on the reuse or sale of subscriber information.

[60 FR 29491, June 5, 1995; 60 FR 54449, Oct. 24, 1995]

### § 64.1604 Effective date.

The provisions of §§ 64.1600 and 64.1602 are effective April 12, 1995. The provisions of §§ 64.1601 and 64.1603 are effective December 1, 1995, except §§ 64.1601 and 64.1603 do not apply to public payphones and partylines until January 1, 1997.

[60 FR 29491, June 5, 1995; 60 FR 54449, Oct. 24, 1995]

## Subpart Q—Implementation of Section 273(d)(5) of the Communiations Act: Dispute Resolution Regarding Equipment Standards

SOURCE: 61 FR 24903, May 17, 1996, unless otherwise noted.

### § 64.1700 Purpose and scope.

The purpose of this subpart is to implement the Telecommunications Act of 1996 which amended the Communications Act by creating section 273(d)(5), 47 U.S.C. 273(d)(5). Section 273(d) sets forth procedures to be followed by non-

accredited standards development organizations when these organizations set industry-wide standards and generic requirements for telecommunications equipment or customer premises equipment. The statutory procedures allow outside parties to fund and participate in setting the organization's standards and require the organization and the parties to develop a process for resolving any technical disputes. In cases where all parties cannot agree to a mutually satisfactory dispute resolution process, section 273(d)(5) requires the Commission to prescribe a dispute resolution process.

### § 64.1701 Definitions.

For purposes of this subpart, the terms *accredited standards development organization*, *funding party*, *generic requirement*, and *industry-wide* have the same meaning as found in 47 U.S.C. 273.

### § 64.1702 Procedures.

If a non-accredited standards development organization (NASDO) and the funding parties are unable to agree unanimously on a dispute resolution process prior to publishing a text for comment pursuant to 47 U.S.C. 273(d)(4)(A)(v), a funding party may use the default dispute resolution process set forth in section 64.1703.

### § 64.1703 Dispute resolution default process.

(a) *Tri-Partite Panel.* Technical disputes governed by this section shall be resolved in accordance with the recommendation of a three-person panel, subject to a vote of the funding parties in accordance with paragraph (b) of this section. Persons who participated in the generic requirements or standards development process are eligible to serve on the panel. The panel shall be selected and operate as follows:

(1) Within two (2) days of the filing of a dispute with the NASDO invoking the dispute resolution default process, both the funding party seeking dispute resolution and the NASDO shall select a representative to sit on the panel;

(2) Within four (4) days of their selection, the two panelists shall select a neutral third panel member to create a tri-partite panel;

(3) The tri-partite panel shall, at a minimum, review the proposed text of the NASDO and any explanatory material provided to the funding parties by the NASDO, the comments and any alternative text provided by the funding party seeking dispute resolution, any relevant standards which have been established or which are under development by an accredited-standards development organization, and any comments submitted by other funding parties;

(4) Any party in interest submitting information to the panel for consideration (including the NASDO, the party seeking dispute resolution and the other funding parties) shall be asked by the panel whether there is knowledge of patents, the use of which may be essential to the standard or generic requirement being considered. The fact that the question was asked along with any affirmative responses shall be recorded, and considered, in the panel's recommendation; and

(5) The tri-partite panel shall, within fifteen (15) days after being established, decide by a majority vote, the issue or issues raised by the party seeking dispute resolution and produce a report of their decision to the funding parties. The tri-partite panel must adopt one of the five options listed below:

(i) The NASDO's proposal on the issue under consideration;

(ii) The position of the party seeking dispute resolution on the issue under consideration;

(iii) A standard developed by an accredited standards development organization that addresses the issue under consideration;

(iv) A finding that the issue is not ripe for decision due to insufficient technical evidence to support the soundness of any one proposal over any other proposal; or

(v) Any other resolution that is consistent with the standard described in section 64.1703(a)(6).

(6) The tri-partite panel must choose, from the five options outlined above, the option that they believe provides the most technically sound solution and base its recommendation upon the substantive evidence presented to the panel. The panel is not precluded from

taking into account complexity of implementation and other practical considerations in deciding which option is most technically sound. Neither of the disputants (i.e., the NASDO and the funding party which invokes the dispute resolution process) will be permitted to participate in any decision to reject the mediation panel's recommendation.

(b) The tri-partite panel's recommendation(s) must be included in the final industry-wide standard or industry-wide generic requirement, unless three-fourths of the funding parties who vote decide within thirty (30) days of the filing of the dispute to reject the recommendation and accept one of the options specified in paragraphs (a)(5) (i) through (v) of this section. Each funding party shall have one vote.

(c) All costs sustained by the tripartite panel will be incorporated into the cost of producing the industry-wide standard or industry-wide generic requirement.

### § 64.1704 Frivolous disputes/penalties.

(a) No person shall willfully refer a dispute to the dispute resolution process under this subpart unless to the best of his knowledge, information and belief there is good ground to support the dispute and the dispute is not interposed for delay.

(b) Any person who fails to comply with the requirements in paragraph (a) of this section, may be subject to forfeiture pursuant to section 503(b) of the Communications Act, 47 U.S.C. 503(b).

## Subpart R—Geographic Rate Averaging and Rate Integration

AUTHORITY: 47 U.S.C. §§ 151, 154(i), 201–205, 214(e), 215 and 254(g).

### § 64.1801 Geographic rate averaging and rate integration.

(a) The rates charged by providers of interexchange telecommunications services to subscribers in rural and high-cost areas shall be no higher than the rates charged by each such provider to its subscribers in urban areas.

(b) A provider of interstate interexchange telecommunications services shall provide such services to its subscribers in each U.S. state at rates no higher than the rates charged to its subscribers in any other state.

[61 FR 42564, Aug. 16, 1996]

## Subpart S—Nondominant Interexchange Carrier Certifications Regarding Geographic Rate Averaging and Rate Integration Requirements

### § 64.1900 Nondominant interexchange carrier certifications regarding geographic rate averaging and rate integration requirements.

(a) A nondominant provider of interexchange telecommunications services, which provides detariffed interstate, domestic, interexchange services, shall file with the Commission, on an annual basis, a certification that it is providing such services in compliance with its geographic rate averaging and rate integration obligations pursuant to section 254(g) of the Communications Act of 1934, as amended.

(b) The certification filed pursuant to paragraph (a) of this section shall be signed by an officer of the company under oath.

[61 FR 59366, Nov. 22, 1996]

## Subpart T—Separate Affiliate Requirements for Incumbent Independent Local Exchange Carriers That Provide In-Region, Interstate Domestic Interexchange Services or In-Region International Interexchange Services

SOURCE: 62 FR 36017, July 3, 1997, unless otherwise noted.

### § 64.1901 Basis and purpose.

(a) *Basis.* These rules are issued pursuant to the Communications Act of 1934, as amended.

(b) *Purpose.* The purpose of these rules is to regulate the provision of in-region, interstate, domestic, interexchange services and in-region international interexchange services by incumbent independent local exchange carriers.

### § 64.1902 Terms and definitions.

Terms used in this part have the following meanings:

*Books of account.* Books of account refer to the financial accounting system a company uses to record, in monetary terms, the basic transactions of a company. These books of account reflect the company's assets, liabilities, and equity, and the revenues and expenses from operations. Each company has its own separate books of account.

*Incumbent Independent Local Exchange Carrier* (Incumbent Independent LEC). The term incumbent independent local exchange carrier means, with respect to an area, the independent local exchange carrier that:

(1) On February 8, 1996, provided telephone exchange service in such area; and

(2)(i) On February 8, 1996, was deemed to be a member of the exchange carrier association pursuant to § 69.601(b) of this title; or

(ii) Is a person or entity that, on or after February 8, 1996, became a successor or assign of a member described in paragraph (2)(i) of this section. The Commission may also, by rule, treat an independent local exchange carrier as an incumbent independent local exchange carrier pursuant to section 251(h)(2) of the Communications Act of 1934, as amended.

*Independent Local Exchange Carrier* (Independent LEC). Independent local exchange carriers are local exchange carriers, including GTE, other than the BOCs.

*Independent Local Exchange Carrier Affiliate* (Independent LEC Affiliate). An independent local exchange carrier affiliate is a carrier that is owned (in whole or in part) or controlled by, or under common ownership (in whole or in part) or control with, an independent local exchange carrier.

*In-region service.* In-region service means telecommunications service originating in an independent local exchange carrier's local service areas or 800 service, private line service, or their equivalents that:

(1) Terminate in the independent LEC's local exchange areas; and

(2) Allow the called party to determine the interexchange carrier, even if the service originates outside the independent LEC's local exchange areas.

*Local Exchange Carrier.* The term local exchange carrier means any person that is engaged in the provision of telephone exchange service or exchange access. Such term does not include a person insofar as such person is engaged in the provision of a commercial mobile service under section 332(c), except to the extent that the Commission finds that such service should be included in the definition of that term.

[64 FR 44425, Aug. 16, 1999]

### § 64.1903 Obligations of all incumbent independent local exchange carriers.

(a) Except as provided in paragraph (c) of this section, an incumbent independent LEC providing in-region, interstate, interexchange services or in-region international interexchange services shall provide such services through an affiliate that satisfies the following requirements:

(1) The affiliate shall maintain separate books of account from its affiliated exchange companies. Nothing in this section requires the affiliate to maintain separate books of account that comply with Part 32 of this title;

(2) The affiliate shall not jointly own transmission or switching facilities with its affiliated exchange companies. Nothing in this section prohibits an affiliate from sharing personnel or other resources or assets with an affiliated exchange company; and

(3) The affiliate shall acquire any services from its affiliated exchange companies for which the affiliated exchange companies are required to file a tariff at tariffed rates, terms, and conditions. Nothing in this section shall prohibit the affiliate from acquiring any unbundled network elements or exchange services for the provision of a telecommunications service from its affiliated exchange companies, subject to the same terms and conditions as provided in an agreement approved under section 252 of the Communications Act of 1934, as amended.

(b) Except as provided in paragraph (b)(1) of this section, the affiliate required in paragraph (a) of this section shall be a separate legal entity from its

affiliated exchange companies. The affiliate may be staffed by personnel of its affiliated exchange companies, housed in existing offices of its affiliated exchange companies, and use its affiliated exchange companies' marketing and other services, subject to paragraph (a)(3) of this section.

(1) For an incumbent independent LEC that provides in-region, interstate domestic interexchange services or in-region international interexchange services using no interexchange switching or transmission facilities or capability of the LEC's own (i.e., ''independent LEC reseller,'') the affiliate required in paragraph (a) of this section may be a separate corporate division of such incumbent independent LEC. All other provisions of this Subpart applicable to an independent LEC affiliate shall continue to apply, as applicable, to such separate corporate division.

(2) [Reserved]

(c) An incumbent independent LEC that is providing in-region, interstate, domestic interexchange services or in-region international interexchange services prior to April 18, 1997, but is not providing such services through an affiliate that satisfies paragraph (a) of this section as of April 18, 1997, shall comply with the requirements of this section no later than August 30, 1999.

[64 FR 44425, Aug. 16, 1999]

## Subpart U—Customer Proprietary Network Information

SOURCE: 63 FR 20338, Apr. 24, 1998, unless otherwise noted.

### § 64.2001 Basis and purpose.

(a) *Basis.* The rules in this subpart are issued pursuant to the Communications Act of 1934, as amended.

(b) *Purpose.* The purpose of the rules in this subpart is to implement section 222 of the Communications Act of 1934, as amended, 47 U.S.C. 222.

### § 64.2003 Definitions.

Terms used in this subpart have the following meanings:

(a) *Affiliate.* An affiliate is an entity that directly or indirectly owns or controls, is owned or controlled by, or is under common ownership or control with, another entity.

(b) *Customer.* A customer of a telecommunications carrier is a person or entity to which the telecommunications carrier is currently providing service.

(c) *Customer proprietary network information (CPNI).*

(1) Customer proprietary network information (CPNI) is:

(i) Information that relates to the quantity, technical configuration, type, destination, and amount of use of a telecommunications service subscribed to by any customer of a telecommunications carrier, and that is made available to the carrier by the customer solely by virtue of the customer-carrier relationship; and

(ii) Information contained in the bills pertaining to telephone exchange service or telephone toll service received by a customer of a carrier.

(2) Customer proprietary network information does not include subscriber list information.

(d) *Customer premises equipment* (CPE). Customer premises equipment (CPE) is equipment employed on the premises of a person (other than a carrier) to originate, route, or terminate telecommunications.

(e) *Information service.* Information service is the offering of a capability for generating, acquiring, storing, transforming, processing, retrieving, utilizing, or making available information via telecommunications, and includes electronic publishing, but does not include any use of any such capability for the management, control, or operation of a telecommunications system or the management of a telecommunications service.

(f) *Local exchange carrier (LEC).* A local exchange carrier (LEC) is any person that is engaged in the provision of telephone exchange service or exchange access. For purposes of this subpart, such term does not include a person insofar as such person is engaged in the provision of commercial mobile service under 47 U.S.C. 332(c).

(g) *Subscriber list information (SLI).* Subscriber list information (SLI) is any information:

(1) Identifying the listed names of subscribers of a carrier and such subscribers' telephone numbers, addresses, or primary advertising classifications (as such classifications are assigned at the time of the establishment of such service), or any combination of such listed names, numbers, addresses, or classifications; and

(2) That the carrier or an affiliate has published, caused to be published, or accepted for publication in any directory format.

(h) *Telecommunications carrier.* A telecommunications carrier is any provider of telecommunications services, except that such term does not include aggregators of telecommunications services (as defined in 47 U.S.C. 226(a)(2)).

**§ 64.2005 Use of customer proprietary network information without customer approval.**

(a) Any telecommunications carrier may use, disclose, or permit access to CPNI for the purpose of providing or marketing service offerings among the categories of service (*i.e.,* local, interexchange, and CMRS) already subscribed to by the customer from the same carrier, without customer approval.

(1) If a telecommunications carrier provides different categories of service, and a customer subscribes to more than one category of service offered by the carrier, the carrier is permitted to share CPNI among the carrier's affiliated entities that provide a service offering to the customer.

(2) If a telecommunications carrier provides different categories of service, but a customer does not subscribe to more than one offering by the carrier, the carrier is not permitted to share CPNI among the carrier's affiliated entities.

(b) A telecommunications carrier may not use, disclose, or permit access to CPNI to market to a customer service offerings that are within a category of service to which the customer does not already subscribe to from that carrier, unless the carrier has customer approval to do so, except as described in paragraph (c) of this section.

(1) A wireless provider may use, disclose, or permit access to CPNI derived from its provision of CMRS, without customer approval, for the provision of CPE and information service(s). A wireline carrier may use, disclose or permit access to CPNI derived from its provision of local exchange service or interexchange service, without customer approval, for the provision of CPE and call answering, voice mail or messaging, voice storage and retrieval services, fax store and forward, and protocol conversions.

(2) A telecommunications carrier may not use, disclose or permit access to CPNI to identify or track customers that call competing service providers. For example, a local exchange carrier may not use local service CPNI to track all customers that call local service competitors.

(c) A telecommunications carrier may use, disclose, or permit access to CPNI, without customer approval, as described in this paragraph (c).

(1) A telecommunications carrier may use, disclose, or permit access to CPNI, without customer approval, in its provision of inside wiring installation, maintenance, and repair services.

(2) CMRS providers may use, disclose, or permit access to CPNI for the purpose of conducting research on the health effects of CMRS.

(3) LECs and CMRS providers may use CPNI, without customer approval, to market services formerly known as adjunct-to-basic services, such as, but not limited to, speed dialing, computer-provided directory assistance, call monitoring, call tracing, call blocking, call return, repeat dialing, call tracking, call waiting, caller I.D., call forwarding, and certain centrex features.

(d) A telecommunications carrier may use, disclose, or permit access to CPNI to protect the rights or property of the carrier, or to protect users of those services and other carriers from fraudulent, abusive, or unlawful use of, or subscription to, such services.

[63 FR 20338, Apr. 24, 1998, as amended at 64 FR 53264, Oct. 1, 1999]

EFFECTIVE DATE NOTE: At 64 FR 53264, Oct. 1, 1999, § 64.2005 was amended by revising paragraph (b)(1), removing paragraph (b)(3), and adding paragraph (d). These paragraphs contain information collection and recordkeeping requirements and will not become

effective until approval has been given by the Office of Management and Budget.

### § 64.2007 Notice and approval required for use of customer proprietary network information.

(a) A telecommunications carrier must obtain customer approval to use, disclose, or permit access to CPNI to market to a customer service to which the customer does not already subscribe to from that carrier.

(b) A telecommunications carrier may obtain approval through written, oral or electronic methods.

(c) A telecommunications carrier relying on oral approval must bear the burden of demonstrating that such approval has been given in compliance with the Commission's rules in this part.

(d) Approval obtained by a telecommunications carrier for the use of CPNI outside of the customer's total service relationship with the carrier must remain in effect until the customer revokes or limits such approval.

(e) A telecommunications carrier must maintain records of notification and approval, whether oral, written or electronic, for at least one year.

(f) Prior to any solicitation for customer approval, a telecommunications carrier must provide a one-time notification to the customer of the customer's right to restrict use of, disclosure of, and access to that customer's CPNI.

(1) A telecommunications carrier may provide notification through oral or written methods.

(2) Customer notification must provide sufficient information to enable the customer to make an informed decision as to whether to permit a carrier to use, disclose or permit access to, the customer's CPNI.

(i) The notification must state that the customer has a right, and the carrier a duty, under federal law, to protect the confidentiality of CPNI.

(ii) The notification must specify the types of information that constitute CPNI and the specific entities that will receive the CPNI, describe the purposes for which CPNI will be used, and inform the customer of his or her right to disapprove those uses, and deny or withdraw access to CPNI at any time.

(iii) The notification must advise the customer of the precise steps the customer must take in order to grant or deny access to CPNI, and must clearly state that a denial of approval will not affect the provision of any services to which the customer subscribes.

(iv) The notification must be comprehensible and not be misleading.

(v) If written notification is provided, the notice must be clearly legible, use sufficiently large type, and be placed in an area so as to be readily apparent to a customer.

(vi) If any portion of a notification is translated into another language, then all portions of the notification must be translated into that language.

(vii) A carrier may state in the notification that the customer's approval to use CPNI may enhance the carrier's ability to offer products and services tailored to the customer's needs. A carrier also may state in the notification that it may be compelled to disclose CPNI to any person upon affirmative written request by the customer.

(viii) A carrier may not include in the notification any statement attempting to encourage a customer to freeze third party access to CPNI.

(ix) The notification must state that any approval, or denial of approval for the use of CPNI outside of the service to which the customer already subscribes to from that carrier is valid until the customer affirmatively revokes or limits such approval or denial.

(3) A telecommunications carrier's solicitation for approval must be proximate to the notification of a customer's CPNI rights.

[63 FR 20338, Apr. 24, 1998, as amended at 64 FR 53264, Oct. 1, 1999]

EFFECTIVE DATE NOTE: At 64 FR 53264, Oct. 1, 1999, § 64.2007 was amended by removing paragraph (f)(4). This amendment contains information collection and recordkeeping requirements and will not become effective until approval has been given by the Office of Management and Budget.

### § 64.2009 Safeguards required for use of customer proprietary network information.

(a) Telecommunications carriers must implement a system by which the status of a customer's CPNI approval

can be clearly established prior to the use of CPNI.

(b) Telecommunications carriers must train their personnel as to when they are and are not authorized to use CPNI, and carriers must have an express disciplinary process in place.

(c) All carriers shall maintain a record, electronically or in some other manner, of their sales and marketing campaigns that use CPNI. The record must include a description of each campaign, the specific CPNI that was used in the campaign, the date and purpose of the campaign, and what products or services were offered as part of the campaign. Carriers shall retain the record for a minimum of one year.

(d) Telecommunications carriers must establish a supervisory review process regarding carrier compliance with the rules in this subpart for outbound marketing situations and maintain records of carrier compliance for a minimum period of one year. Specifically, sales personnel must obtain supervisory approval of any proposed outbound marketing request.

(e) A telecommunications carrier must have an officer, as an agent of the carrier, sign a compliance certificate on an annual basis stating that the officer has personal knowledge that the company has established operating procedures that are adequate to ensure compliance with the rules in this subpart. The carrier must provide a statement accompanying the certificate explaining how its operating procedures ensure that it is or is not in compliance with the rules in this subpart.

[63 FR 20338, Apr. 24, 1998, as amended at 64 FR 53264, Oct. 1, 1999]

EFFECTIVE DATE NOTE: At 64 FR 53264, Oct.1, 1999, § 64.2009 was amended by revising paragraphs (a), (c), and (e). These paragraphs contain information collection and recordkeeping requirements and will not become effective until approval has been given by the Office of Management and Budget.

## Subpart V—Telecommunications Carrier Systems Security and Integrity Pursuant to the Communications Assistance for Law Enforcement Act (CALEA)

SOURCE: 64 FR 51469, Sept. 23, 1999, unless otherwise noted.

### § 64.2100 Purpose.

Pursuant to the Communications Assistance for Law Enforcement Act, Public Law 103–414, 108 Stat. 4279 (1994) (codified as amended in sections of 18 U.S.C. and 47 U.S.C.), this subpart contains rules that require a telecommunications carrier to ensure that any interception of communications or access to call-identifying information effected within its switching premises can be activated only in accordance with appropriate legal authorization, appropriate carrier authorization, and with the affirmative intervention of an individual officer or employee of the carrier acting in accordance with regulations prescribed by the Commission.

### § 64.2101 Scope.

The definitions included in this subchapter shall be used solely for the purpose of implementing CALEA requirements.

### § 64.2102 Definitions.

(a) *Appropriate legal authorization*. The term *appropriate legal authorization* means:

(1) A court order signed by a judge or magistrate authorizing or approving interception of wire or electronic communications; or

(2) Other authorization, pursuant to 18 U.S.C. 2518(7), or any other relevant federal or state statute.

(b) *Appropriate carrier authorization*. The term *appropriate carrier authorization* means the policies and procedures adopted by telecommunications carriers to supervise and control officers and employees authorized to assist law

enforcement in conducting any interception of communications or access to call-identifying information.

(c) *Appropriate authorization*. The term *appropriate authorization* means both appropriate legal authorization and appropriate carrier authorization.

### § 64.2103 Policies and procedures for employee supervision and control.

A telecommunications carrier shall:

(a) Establish policies and procedures to ensure the supervision and control of its officers and employees;

(b) Appoint a senior officer or employee as a point of contact responsible for affirmatively intervening to ensure that interception of communications or access to call-identifying information can be activated only in accordance with appropriate legal authorization, and include, in its policies and procedures, a description of the job function of the appointed point of contact for law enforcement to reach on a seven days a week, 24 hours a day basis;

(c) Incorporate, in its polices and procedures, an interpretation of the phrase *appropriate authorization* that encompasses the definitions of *appropriate legal authorization* and appropriate carrier authorization, as stated above;

(d) State, in its policies and procedures, that carrier personnel must receive appropriate legal authorization and appropriate carrier authorization before enabling law enforcement officials and carrier personnel to implement the interception of communications or access to call-identifying information;

(e) Report to the affected law enforcement agencies, within a reasonable time upon discovery:

(1) Any act of compromise of a lawful interception of communications or access to call-identifying information to unauthorized persons or entities; and

(2) Any act of unlawful electronic surveillance that occurred on its premises.

(f) Include, in its policies and procedures, a detailed description of how long it will maintain its records of each interception of communications or access to call-identifying information pursuant to § 64.2104.

[64 FR 51469, Sept. 23, 1999, as amended at 64 FR 52245, Sept. 28, 1999]

EFFECTIVE DATE NOTE: At 64 FR 51469, Sept. 23, 1999, § 64.2103 was added, and at 64 FR 52245, Sept. 28, 1999, it was amended by revising paragraph (f). This section contains information collection and recordkeeping requirements and will not become effective until approval has been given by the Office of Management and Budget.

### § 64.2104 Maintaining secure and accurate records.

(a) A telecommunications carrier shall maintain a secure and accurate record of each interception of communications or access to call-identifying information, made with or without appropriate authorization, in the form of single certification.

(1) This certification must include, at a minimum, the following information:

(i) The telephone number(s) and/or circuit identification numbers involved;

(ii) The start date and time of the opening of the circuit for law enforcement;

(iii) The identity of the law enforcement officer presenting the authorization;

(iv) The name of the person signing the appropriate legal authorization;

(v) The type of interception of communications or access to call-identifying information (e.g., pen register, trap and trace, Title III, FISA); and

(vi) The name of the telecommunications carriers' personnel who is responsible for overseeing the interception of communication or access to call-identifying information and who is acting in accordance with the carriers' policies established under § 64.2103.

(2) This certification must be signed by the individual who is responsible for overseeing the interception of communications or access to call-identifying information and who is acting in accordance with the telecommunications carrier's policies established under § 64.2103. This individual will, by his/her signature, certify that the record is complete and accurate.

(3) This certification must be compiled either contemporaneously with, or within a reasonable period of time

after the initiation of the interception of the communications or access to call-identifying information.

(4) A telecommunications carrier may satisfy the obligations of paragraph (a) of this section by requiring the individual who is responsible for overseeing the interception of communication or access to call-identifying information and who is acting in accordance with the carriers' policies established under § 64.2103 to sign the certification and append the appropriate legal authorization and any extensions that have been granted. This form of certification must at a minimum include all of the information listed in paragraph (a) of this section.

(b) A telecommunications carrier shall maintain the secure and accurate records set forth in paragraph (a) for a reasonable period of time as determined by the carrier.

(c) It is the telecommunications carrier's responsibility to ensure its records are complete and accurate.

(d) Violation of this rule is subject to the penalties of § 64.2106.

[64 FR 51469, Sept. 23, 1999, as amended at 64 FR 52245, Sept. 28, 1999]

EFFECTIVE DATE NOTE: At 64 FR 51469, Sept. 23, 1999, § 64.2104 was added, and at 64 FR 52245, Sept. 28, 1999, it was amended by revising paragraph (b). This section contains information collection and recordkeeping requirements and will not become effective until approval has been given by the Office of Management and Budget.

### § 64.2105 Submission of policies and procedures and commission review.

(a) Each telecommunications carrier shall file with the Commission the policies and procedures it uses to comply with the requirements of this subchapter. These policies and procedures shall be filed with the Federal Communications Commission within 90 days of the effective date of these rules, and thereafter, within 90 days of a carrier's merger or divestiture or a carrier's amendment of its existing policies and procedures.

(b) The Commission shall review each telecommunications carrier's policies and procedures to determine whether they comply with the requirements of § 64.2103 and § 64.2104.

(1) If, upon review, the Commission determines that a telecommunications carrier's policies and procedures do not comply with the requirements established under § 64.2103 and § 64.2104, the telecommunications carrier shall modify its policies and procedures in accordance with an order released by the Commission.

(2) The Commission shall review and order modification of a telecommunications carrier's policies and procedures as may be necessary to insure compliance by telecommunications carriers with the requirements of the regulations prescribed under § 64.2103 and § 64.2104.

EFFECTIVE DATE NOTE: At 64 FR 51469, Sept. 23, 1999, § 64.2105 was added. This section contains information collection and recordkeeping requirements and will not become effective until approval has been given by the Office of Management and Budget.

### § 64.2106 Penalties.

In the event of a telecommunications carrier's violation of § 64.2103 or § 64.2104 of this subchapter, the Commission shall enforce the penalties articulated in 47 U.S.C. 503(b) of the Communications Act of 1934 and 47 CFR 1.8.

## Subpart W—Required New Capabilities Pursuant to the Communications Assistance for Law Enforcement Act (CALEA)

SOURCE: 64 FR 51718, Sept. 24, 1999, unless otherwise noted.

### § 64.2200 Purpose.

Pursuant to the Communications Assistance for Law Enforcement Act (CALEA), Public Law 103–414, 108 Stat. 4279 (1994) (codified as amended in sections of 18 U.S.C. and 47 U.S.C.), this subpart contains rules that require a wireline telecommunications carrier to implement certain capabilities to ensure law enforcement access to authorized communications or call-identifying information.

### § 64.2201 Scope.

The definitions included in this subpart shall be used solely for the purpose of implementing CALEA requirements.

**§ 64.2202 Definitions.**

*Call identifying information.* Call identifying information means dialing or signaling information that identifies the origin, direction, destination, or termination of each communication generated or received by a subscriber by means of any equipment, facility, or service of a telecommunications carrier. Call identifying information is ''reasonably available'' to a carrier if it is present at an intercept access point and can be made available without the carrier being unduly burdened with network modifications.

*Collection function.* The location where lawfully authorized intercepted communications and call-identifying information is collected by a law enforcement agency (LEA).

*Content of subject-initiated conference calls.* Capability that permits a LEA to monitor the content of conversations by all parties connected via a conference call when the facilities under surveillance maintain a circuit connection to the call.

*Dialed digit extraction.* Capability that permits a LEA to receive on the call data channel a digits dialed by a subject after a call is connected to another carrier's service for processing and routing.

*IAP.* Intercept access point is a point within a carrier's system where some of the communications or call-identifying information of an intercept subject's equipment, facilities, and services are accessed.

*In-band and out-of-band signaling.* Capability that permits a LEA to be informed when a network message that provides call identifying information (*e.g.*, ringing, busy, call waiting signal, message light) is generated or sent by the IAP switch to a subject using the facilities under surveillance. Excludes signals generated by customer premises equipment when no network signal is generated.

*J–STD–025.* The interim standard developed by the Telecommunications Industry Association and the Alliance for Telecommunications Industry Solutions for wireline, cellular, and broadband PCS carriers. This standard defines services and features to support lawfully authorized electronic surveillance, and specifies interfaces necessary to deliver intercepted communications and call-identifying information to a LEA.

*LEA.* Law enforcement agency; *e.g.*, the Federal Bureau of Investigation or a local police department.

*Party hold, join, drop on conference calls.* Capability that permits a LEA to identify the parties to a conference call conversation at all times.

*Subject-initiated dialing and signaling information.* Capability that permits a LEA to be informed when a subject using the facilities under surveillance uses services that provide call identifying information, such as call forwarding, call waiting, call hold, and three-way calling. Excludes signals generated by customer premises equipment when no network signal is generated.

*Timing information.* Capability that permits a LEA to associate call-identifying information with the content of a call. A call-identifying message must be sent from the carrier's IAP to the LEA's Collection Function within eight seconds of receipt of that message by the IAP at least 95% of the time, and with the call event timestamped to an accuracy of at least 200 milliseconds.

**§ 64.2203 Capabilities that must be provided by a wireline telecommunications carrier.**

(a) Except as provided under paragraph (b) of this section, as of June 30, 2000, a wireline telecommunications carrier shall provide to a LEA the assistance capability requirements of CALEA, see 47 U.S.C. 1002. A carrier may satisfy these requirements by complying with publicly available technical requirements or standards adopted by an industry association or standard-setting organization, such as J–STD–025.

(b) As of September 30, 2001, a wireline telecommunications carrier shall provide to a LEA communications and call-identifying information transported by packet-mode communications and the following capabilities:

(1) Content of subject-initiated conference calls;

(2) Party hold, join, drop on conference calls;

(3) Subject-initiated dialing and signaling information ;

(4) In-band and out-of-band signaling;

(5) Timing information;

(6) Dialed digit extraction.

[64 FR 51718, Sept. 24, 1999; 65 FR 36637, June 9, 2000; 65 FR 18255, Apr. 7, 2000]

## Subpart X—Subscriber List Information

SOURCE: 64 FR 53947, Oct. 5, 2000, unless otherwise noted.

### § 64.2301 Basis and purpose.

(a) *Basis.* These rules are issued pursuant to the Communications Act of 1934, as amended.

(b) *Purpose.* The purpose of these rules is to implement section 222(e) of the Communications Act of 1934, as amended, 47 U.S.C. 222. Section 222(e) requires that ''a telecommunications carrier that provides telephone exchange service shall provide subscriber list information gathered in its capacity as a provider of such service on a timely and unbundled basis, under nondiscriminatory and reasonable rates, terms, and conditions, to any person upon request for the purpose of publishing directories in any format.''

### § 64.2305 Definitions.

Terms used in this subpart have the following meanings:

(a) *Base file subscriber list information.* A directory publisher requests base file subscriber list information when the publisher requests, as of a given date, all of a carrier's subscriber list information that the publisher wishes to include in one or more directories.

(b) *Business subscriber.* Business subscriber refers to a subscriber to telephone exchange service for businesses.

(c) *Primary advertising classification.* A primary advertising classification is the principal business heading under which a subscriber to telephone exchange service for businesses chooses to be listed in the yellow pages, if the carrier either assigns that heading or is obligated to provide yellow pages listings as part of telephone exchange service to businesses. In other circumstances, a primary advertising classification is the classification of a subscriber to telephone exchange service as a business subscriber.

(d) *Residential subscriber.* Residential subscriber refers to a subscriber to telephone exchange service that is not a business subscriber.

(e) *Subscriber list information.* Subscriber list information is any information:

(1) Identifying the listed names of subscribers of a carrier and such subscribers' telephone numbers, addresses, or primary advertising classifications (as such classifications are assigned at the time of the establishment of such service), or any combination of such listed names, numbers, addresses, or classifications; and

(2) That the carrier or an affiliate has published, caused to be published, or accepted for publication in any directory format.

(f) *Telecommunications carrier.* A telecommunications carrier is any provider of telecommunications services, except that such term does not include aggregators of telecommunications services (as defined in 47 U.S.C. 226(a)(2)).

(g) *Telephone exchange service.* Telephone exchange service means:

(1) Service within a telephone exchange, or within a connected system of telephone exchanges within the same exchange area operated to furnish to subscribers intercommunicating service of the character ordinarily furnished by a single exchange, and which is covered by the exchange service charge, or

(B) Comparable service provided through a system of switches, transmission equipment, or other facilities (or combination thereof) by which a subscriber can originate and terminate a telecommunications service.

(h) *Updated subscriber list information.* A directory publisher requests updated subscriber list information when the publisher requests changes to all or any part of a carrier's subscriber list information occurring between specified dates.

**§ 64.2309 Provision of subscriber list information.**

(a) A telecommunications carrier that provides telephone exchange service shall provide subscriber list information gathered in its capacity as a provider of such service on a timely and unbundled basis, under nondiscriminatory and reasonable rates, terms, and conditions, to any person upon request for the purpose of publishing directories in any format.

(b) The obligation under paragraph (a) to provide a particular telephone subscriber's subscriber list information extends only to the carrier that provides that subscriber with telephone exchange service.

**§ 64.2313 Timely basis.**

(a) For purposes of § 64.2309, a telecommunications carrier provides subscriber list information on a timely basis only if the carrier provides the requested information to the requesting directory publisher either:

(1) At the time at which, or according to the schedule under which, the directory publisher requests that the subscriber list information be provided;

(2) When the carrier does not receive at least thirty days advance notice of the time the directory publisher requests that subscriber list information be provided, on the first business day that is at least thirty days from date the carrier receives that request; or

(3) At a time determined in accordance with paragraph (b) of this section.

(b) If a carrier's internal systems do not permit the carrier to provide subscriber list information within either of the time frames specified in paragraph (a)(1) of this section, the carrier shall:

(1) Within thirty days of receiving the publisher's request, inform the directory publisher that the requested schedule cannot be accommodated and tell the directory publisher which schedules can be accommodated; and

(2) Adhere to the schedule the directory publisher chooses from among the available schedules.

**§ 64.2317 Unbundled basis.**

(a) A directory publisher may request that a carrier unbundle subscriber list information on any basis for the purpose of publishing one or more directories.

(b) For purposes of § 64.2309, a telecommunications carrier provides subscriber list information on an unbundled basis only if the carrier provides:

(1) The listings the directory publisher requests and no other listings, products, or services; or

(2) Subscriber list information on a basis determined in accordance with paragraph (c) of this section.

(c) If the carrier's internal systems do not permit it unbundle subscriber list information on the basis a directory publisher requests, the carrier must:

(1) Within thirty days of receiving the publisher's request, inform the directory publisher that it cannot unbundle subscriber list information on the requested basis and tell the directory publisher the bases on which the carrier can unbundle subscriber list information; and

(2) In accordance with paragraph (d) of this section, provide subscriber list information to the directory publisher unbundled on the basis the directory publisher chooses from among the available bases.

(d) If a carrier provides a directory publisher listings in addition to those the directory publisher requests, the carrier may impose charges for, and the directory publisher may publish, only the requested listings.

(e) A carrier must not require directory publishers to purchase any product or service other than subscriber list information as a condition of obtaining subscriber list information.

**§ 64.2321 Nondiscriminatory rates, terms, and conditions.**

For purposes of § 64.2309, a telecommunications carrier provides subscriber list information under nondiscriminatory rates, terms, and conditions only if the carrier provides subscriber list information gathered in its capacity as a provider of telephone exchange service to a requesting directory publisher at the same rates, terms, and conditions that the carrier

provides the information to its own directory publishing operation, its directory publishing affiliate, or other directory publishers.

### § 64.2325 Reasonable rates, terms, and conditions.

(a) For purposes of § 64.2309, a telecommunications carrier will be presumed to provide subscriber list information under reasonable rates if its rates are no more than $0.04 a listing for base file subscriber list information and no more than $0.06 a listing for updated subscriber list information.

(b) For purposes of § 64.2309, a telecommunications carrier provides subscriber list information under reasonable terms and conditions only if the carrier does not restrict a directory publisher's choice of directory format.

### § 64.2329 Format.

(a) A carrier shall provide subscriber list information obtained in its capacity as a provider of telephone exchange service to a requesting directory publisher in the format the publisher specifies, if the carrier's internal systems can accommodate that format.

(b) If a carrier's internal systems do not permit the carrier to provide subscriber list information in the format the directory publisher specifies, the carrier shall:

(1) Within thirty days of receiving the publisher's request, inform the directory publisher that the requested format cannot be accommodated and tell the directory publisher which formats can be accommodated; and

(2) Provide the requested subscriber list information in the format the directory publisher chooses from among the available formats.

### § 64.2333 Burden of proof.

(a) In any future proceeding arising under section 222(e) of the Communications Act or § 64.2309, the burden of proof will be on the carrier to the extent it claims its internal subscriber list information systems cannot accommodate the delivery time, delivery schedule, unbundling level, or format requested by a directory publisher.

(b) In any future proceeding arising under section 222(e) of the Communications Act or § 64.2309, the burden of proof will be on the carrier to the extent it seeks a rate exceeding $0.04 per listing for base file subscriber list information or $0.06 per listing for updated subscriber list information.

### § 64.2337 Directory publishing purposes.

(a) Except to the extent the carrier and directory publisher otherwise agree, a directory publisher shall use subscriber list information obtained pursuant to section 222(e) of the Communications Act or § 64.2309 only for the purpose of publishing directories.

(b) A directory publisher uses subscriber list information ''for the purpose of publishing directories'' if the publisher includes that information in a directory, or uses that information to determine what information should be included in a directory, solicit advertisers for a directory, or deliver directories.

(c) A telecommunications carrier may require any person requesting subscriber list information pursuant to section 222(e) of the Communications Act or § 64.2309 to certify that the publisher will use the information only for purposes of publishing a directory.

(d) A carrier must provide subscriber list information to a requesting directory publisher even if the carrier believes that the directory publisher will use that information for purposes other than or in addition to directory publishing.

### § 64.2341 Record keeping.

(a) A telecommunications carrier must retain, for at least one year after its expiration, each written contract that it has executed for the provision of subscriber list information for directory publishing purposes to itself, an affiliate, or an entity that publishes directories on the carrier's behalf.

(b) A telecommunications carrier must maintain, for at least one year after the carrier provides subscriber list information for directory publishing purposes to itself, an affiliate, or an entity that publishes directories on the carrier's behalf, records of any of its rates, terms, and conditions for providing that subscriber list information which are not set forth in a written contract.

(c) A carrier shall make the contracts and records described in paragraphs (a) and (b) of this section available, upon request, to the Commission and to any directory publisher that requests those contracts and records for the purpose of publishing a directory.

### § 64.2345 Primary advertising classification.

A primary advertising classification is assigned at the time of the establishment of telephone exchange service if the carrier that provides telephone exchange service assigns the classification or if a tariff or State requirement obligates the carrier to provide yellow pages listings as part of telephone exchange service to businesses.

## Subpart Y—Truth-in-Billing Requirements for Common Carriers

SOURCE: 64 FR 34497, June 25, 1999, unless otherwise noted.

### § 64.2400 Purpose and scope.

(a) The purpose of these rules is to reduce slamming and other telecommunications fraud by setting standards for bills for telecommunications service. These rules are also intended to aid customers in understanding their telecommunications bills, and to provide them with the tools they need to make informed choices in the market for telecommunications service.

(b) These rules shall apply to all telecommunications common carriers, except that §§ 64.2001(a)(2), 64.2001(b), and 64.2001(c) shall not apply to providers of Commercial Mobile Radio Service as defined in § 20.9 of this chapter, or to other providers of mobile service as defined in § 20.7 of this chapter, unless the Commission determines otherwise in a further rulemaking.

(c) *Preemptive effect of rules.* The requirements contained in this subpart are not intended to preempt the adoption or enforcement of consistent truth-in-billing requirements by the states.

[64 FR 34497, June 25, 1999; 64 FR 56177, Oct. 18, 2000; 65 FR 36637, June 9, 2000, as amended at 65 FR 43258, July 13, 2000]

### § 64.2401 Truth-in-Billing Requirements.

(a) *Bill organization.* Telephone bills shall be clearly organized, and must comply with the following requirements:

(1) The name of the service provider associated with each charge must be clearly and conspicuously identified on the telephone bill.

(2) Where charges for two or more carriers appear on the same telephone bill, the charges must be separated by service provider.

(3) The telephone bill must clearly and conspicuously identify any change in service provider, including identification of charges from any new service provider. For purpose of this subparagraph ''new service provider'' means a service provider that did not bill the subscriber for service during the service provider's last billing cycle. This definition shall include only providers that have continuing relationships with the subscriber that will result in periodic charges on the subscriber's bill, unless the service is subsequently canceled.

(b) *Descriptions of billed charges.* Charges contained on telephone bills must be accompanied by a brief, clear, non-misleading, plain language description of the service or services rendered. The description must be sufficiently clear in presentation and specific enough in content so that customers can accurately assess that the services for which they are billed correspond to those that they have requested and received, and that the costs assessed for those services conform to their understanding of the price charged.

(c) *''Deniable'' and ''Non-Deniable'' Charges.* Where a bill contains charges for basic local service, in addition to other charges, the bill must distinguish between charges for which non-payment will result in disconnection of basic, local service, and charges for which non-payment will not result in such disconnection. The carrier must explain this distinction to the customer, and must clearly and conspicuously identify on the bill those charges for which non-payment will not result in disconnection of basic, local service. Carriers may also elect to devise other

methods of informing consumers on the bill that they may contest charges prior to payment.

(d) *Clear and conspicuous disclosure of inquiry contacts.* Telephone bills must contain clear and conspicuous disclosure of any information that the subscriber may need to make inquiries about, or contest, charges on the bill. Common carriers must prominently display on each bill a toll-free number or numbers by which subscribers may inquire or dispute any charges on the bill. A carrier may list a toll-free number for a billing agent, clearinghouse, or other third party, provided such party possesses sufficient information to answer questions concerning the subscriber's account and is fully authorized to resolve the consumer's complaints on the carrier's behalf. Where the subscriber does not receive a paper copy of his or her telephone bill, but instead accesses that bill only by e-mail or internet, the carrier may comply with this requirement by providing on the bill an e-mail or web site address. Each carrier must make a business address available upon request from a consumer.

(e) *Definition of clear and conspicuous.* For purposes of this section, ''clear and conspicuous'' means notice that would be apparent to the reasonable consumer.

NOTE TO §64.2401: The following provisions, for which compliance would have been required as of April 1, 2000, have been stayed until such time as the amendments to §64.2401(a), (d), and (e) become effective (following their approval by the Office of Management and Budget and the publication by the Commission of a document in the FEDERAL REGISTER announcing the effective date of these amended rules) and will be superceded by the amended rules: (1) That portion of §64.2401(a)(2) that requires that each carrier's ''telephone bill must provide clear and conspicuous notification of any change in service provider, including notification to the customer that a new provider has begun providing service,'' (2) §64.2401(a)(2)(ii), and (3) §64.2401(d).

[64 FR 34497, June 25, 1999, as amended at 65 FR 43258, July 13, 2000]

## APPENDIX A TO PART 64—TELECOMMUNICATIONS SERVICE PRIORITY (TSP) SYSTEM FOR NATIONAL SECURITY EMERGENCY PREPAREDNESS (NSEP)

### *1. Purpose and Authority*

a. This appendix establishes policies and procedures and assigns responsibilities for the National Security Emergency Preparedness (NSEP) Telecommunications Service Priority (TSP) System. The NSEP TSP System authorizes priority treatment to certain domestic telecommunications services (including portions of U.S. international telecommunication services provided by U.S. service vendors) for which provisioning or restoration priority (RP) levels are requested, assigned, and approved in accordance with this appendix.

b. This appendix is issued pursuant to sections 1, 4(i), 201 through 205 and 303(r) of the Communications Act of 1934, as amended, 47 U.S.C. 151, 154(i), 201 through 205 and 303(r). These sections grant to the Federal Communications Commission (FCC) the authority over the assignment and approval of priorities for provisioning and restoration of common carrier-provided telecommunications services. Under section 706 of the Communications Act, this authority may be superseded, and expanded to include non-common carrier telecommunication services, by the war emergency powers of the President of the United States. This appendix provides the Commission's Order to telecommunication service vendors and users to comply with policies and procedures establishing the NSEP TSP System, until such policies and procedures are superseded by the President's war emergency powers. This appendix is intended to be read in conjunction with regulations and procedures that the Executive Office of the President issues (1) to implement responsibilities assigned in section 6(b) of this appendix, or (2) for use in the event this appendix is superseded by the President's war emergency powers.

c. Together, this appendix and the regulations and procedures issued by the Executive Office of the President establish one uniform system of priorities for provisioning and restoration of NSEP telecommunication services both before and after invocation of the President's war emergency powers. In order that government and industry resources may be used effectively under all conditions, a single set of rules, regulations, and procedures is necessary, and they must be applied on a day-to-day basis to all NSEP services so that the priorities they establish can be implemented at once when the need arises.

*In sections 2(a)(2) and 2(b)(2) of Executive Order No. 12472, ''Assignment of National Security and Emergency Preparedness Telecommunications Functions'' April 3, 1984 (49 FR 13471 (1984)), the President assigned to the Director, Office of Science and Technology Policy, certain NSEP telecommunication resource management responsibilities. The term ''Executive Office of the President'' as used in this appendix refers to the official or organization designated by the President to act on his behalf.

*2. Applicability and Revocation*

a. This appendix applies to NSEP telecommunications services:

(1) For which initial or revised priority level assignments are requested pursuant to section 8 of this appendix.

(2) Which were assigned restoration priorities under the provision of FCC Order 80–581; 81 FCC 2d 441 (1980); 47 CFR part 64, appendix A, ''Priority System for the Restoration of Common Carrier Provided Intercity Private Line Services''; and are being resubmitted for priority level assignments pursuant to section 10 of this appendix. (Such services will retain assigned restoration priorities until a resubmission for a TSP assignment is completed or until the existing RP rules are terminated.)

b. FCC Order 80–581 will continue to apply to all other intercity, private line circuits assigned restoration priorities thereunder until the fully operating capability date of this appendix, 30 months after the initial operating capability date referred to in subsection d of this section.

c. In addition, FCC Order, ''Precedence System for Public Correspondence Services Provided by the Communications Common Carriers'' (34 FR 17292 (1969)); (47 CFR part 64, appendix B), is revoked as of the effective date of this appendix.

d. The initial operating capability (IOC) date for NSEP TSP will be nine months after release in the FEDERAL REGISTER of the FCC's order following review of procedures submitted by the Executive Office of the President. On this IOC date requests for priority assignments generally will be accepted only by the Executive Office of the President.

*3. Definitions*

As used in this part:

a. *Assignment* means the designation of priority level(s) for a defined NSEP telecommunications service for a specified time period.

b. *Audit* means a quality assurance review in response to identified problems.

c. *Government* refers to the Federal government or any foreign, state, county, municipal or other local government agency or organization. Specific qualifications will be supplied whenever reference to a particular level of government is intended (e.g., ''Federal government'', ''state government''). ''Foreign government'' means any sovereign empire, kingdom, state, or independent political community, including foreign diplomatic and consular establishments and coalitions or associations of governments (e.g., North Atlantic Treaty Organization (NATO), Southeast Asian Treaty Organization (SEATO), Organization of American States (OAS), and government agencies or organization (e.g., Pan American Union, International Postal Union, and International Monetary Fund)).

d. *National Communications System (NCS)* refers to that organization established by the President in Executive Order No. 12472, ''Assignment of National Security and Emergency Preparedness Telecommunications Functions,'' April 3, 1984, 49 FR 13471 (1984).

e. *National Coordinating Center (NCC)* refers to the joint telecommunications industry-Federal government operation established by the National Communications System to assist in the initiation, coordination, restoration, and reconstitution of NSEP telecommunication services or facilities.

f. *National Security Emergency Preparedness (NSEP)* telecommunications services, or ''NSEP services,'' means telecommunication services which are used to maintain a state of readiness or to respond to and manage any event or crisis (local, national, or international), which causes or could cause injury or harm to the population, damage to or loss of property, or degrades or threatens the NSEP posture of the United States. These services fall into two specific categories, Emergency NSEP and Essential NSEP, and are assigned priority levels pursuant to section 9 of this appendix.

g. *NSEP treatment* refers to the provisioning of a telecommunication service before others based on the provisioning priority level assigned by the Executive Office of the President.

h. *Priority action* means assignment, revision, revocation, or revalidation by the Executive Office of the President of a priority level associated with an NSEP telecommunications service.

i. *Priority level* means the level that may be assigned to an NSEP telecommunications service specifying the order in which provisioning or restoration of the service is to occur relative to other NSEP and/or non-NSEP telecommunication services. Priority levels authorized by this appendix are designated (highest to lowest) ''E,'' ''1,'' ''2,'' ''3,'' ''4,'' and ''5,'' for provisioning and ''1,'' ''2,'' ''3,'' ''4,'' and ''5,'' for restoration.

j. *Priority level assignment* means the priority level(s) designated for the provisioning and/or restoration of a particular NSEP telecommunications service under section 9 of this appendix.

k. *Private NSEP telecommunications services* include non-common carrier telecommunications services including private line, virtual private line, and private switched network services.

l. *Provisioning* means the act of supplying telecommunications service to a user, including all associated transmission, wiring and equipment. As used herein, ''provisioning'' and ''initiation'' are synonymous and include altering the state of an existing priority service or capability.

m. *Public switched NSEP telecommunications services* include those NSEP telecommunications services utilizing public switched networks. Such services may include both interexchange and intraexchange network facilities (e.g., switching systems, interoffice trunks and subscriber loops).

n. *Reconciliation* means the comparison of NSEP service information and the resolution of identified discrepancies.

o. *Restoration* means the repair or returning to service of one or more telecommunication services that have experienced a service outage or are unusable for any reason, including a damaged or impaired telecommunications facility. Such repair or returning to service may be done by patching, rerouting, substitution of component parts or pathways, and other means, as determined necessary by a service vendor.

p. *Revalidation* means the rejustification by a service user of a priority level assignment. This may result in extension by the Executive Office of the President of the expiration date associated with the priority level assignment.

q. *Revision* means the change of priority level assignment for an NSEP telecommunications service. This includes any extension of an existing priority level assignment to an expanded NSEP service.

r. *Revocation* means the elimination of a priority level assignment when it is no longer valid. All priority level assignments for an NSEP service are revoked upon service termination.

s. *Service identification* refers to the information uniquely identifying an NSEP telecommunications service to the service vendor and/or service user.

t. *Service user* refers to any individual or organization (including a service vendor) supported by a telecommunications service for which a priority level has been requested or assigned pursuant to section 8 or 9 of this appendix.

u. *Service vendor* refers to any person, association, partnership, corporation, organization, or other entity (including common carriers and government organizations) that offers to supply any telecommunications equipment, facilities, or services (including customer premises equipment and wiring) or combination thereof. The term includes resale carriers, prime contractors, subcontractors, and interconnecting carriers.

v. *Spare circuits or services* refers to those not being used or contracted for by any customer.

w. *Telecommunication services* means the transmission, emission, or reception of signals, signs, writing, images, sounds, or intelligence of any nature, by wire, cable, satellite, fiber optics, laser, radio, visual or other electronic, electric, electromagnetic, or acoustically coupled means, or any combination thereof. The term can include necessary telecommunication facilities.

x. *Telecommunications Service Priority (TSP) system user* refers to any individual, organization, or activity that interacts with the NSEP TSP System.

*4. Scope*

a. *Domestic NSEP services.* The NSEP TSP System and procedures established by this appendix authorize priority treatment to the following domestic telecommunication services (including portions of U.S. international telecommunication services provided by U.S. vendors) for which provisioning or restoration priority levels are requested, assigned, and approved in accordance with this appendix:

(1) Common carrier services which are:

(a) Interstate or foreign telecommunications services,

(b) Intrastate telecommunication services inseparable from interstate or foreign telecommunications services, and instrastate telecommunication services to which priority levels are assigned pursuant to section 9 of this appendix.

NOTE: Initially, the NSEP TSP System's applicability to public switched services is limited to (a) provisioning of such services (e.g., business, centrex, cellular, foreign exchange, Wide Area Telephone Service (WATS) and other services that the selected vendor is able to provision) and (b) restoration of services that the selected vendor is able to restore.

(2) Services which are provided by government and/or non-common carriers and are interconnected to common carrier services assigned a priority level pursuant to section 9 of this appendix.

b. *Control services and orderwires.* The NSEP TSP System and procedures established by this appendix are not applicable to authorize priority treatment to control services or orderwires owned by a service vendor and needed for provisioning, restoration, or maintenance of other services owned by that service vendor. Such control services and orderwires shall have priority provisioning and restoration over all other telecommunication services (including NSEP services) and shall be exempt from preemption. However, the NSEP TSP System and procedures

established by this appendix are applicable to control services or orderwires leased by a service vendor.

c. *Other services.* The NSEP TSP System may apply, at the discretion of and upon special arrangements by the NSEP TSP System users involved, to authorize priority treatment to the following telecommunication services:

(1) Government or non-common carrier services which are not connected to common carrier provided services assigned a priority level pursuant to section 9 of this appendix.

(2) Portions of U.S. international services which are provided by foreign correspondents. (U.S. telecommunication service vendors are encouraged to ensure that relevant operating arrangements are consistent to the maximum extent practicable with the NSEP TSP System. If such arrangements do not exist, U.S. telecommunication service vendors should handle service provisioning and/or restoration in accordance with any system acceptable to their foreign correspondents which comes closest to meeting the procedures established in this appendix.)

*5. Policy*

The NSEP TSP System is the regulatory, administrative, and operational system authorizing and providing for priority treatment, *i.e.,* provisioning and restoration, of NSEP telecommunication services. As such, it establishes the framework for telecommunication service vendors to provision, restore, or otherwise act on a priority basis to ensure effective NSEP telecommunication services. The NSEP TSP System allows the assignment of priority levels to any NSEP service across three time periods, or stress conditions: Peacetime/Crisis/Mobilizations, Attack/War, and Post-Attack/Recovery. Although priority levels normally will be assigned by the Executive Office of the President and retained by service vendors only for the current time period, they may be preassigned for the other two time periods at the request of service users who are able to identify and justify in advance, their wartime or post-attack NSEP telecommunication requirements. Absent such preassigned priority levels for the Attack/War and Post-Attack/Recovery periods, priority level assignments for the Peacetime/Crisis/Mobilization period will remain in effect. At all times, priority level assignments will be subject to revision by the FCC or (on an interim basis) the Executive Office of the President, based upon changing NSEP needs. No other system of telecommunication service priorities which conflicts with the NSEP TSP System is authorized.

*6. Responsibilities*

a. The FCC will:

(1) Provide regulatory oversight of implementation of the NSEP TSP System.

(2) Enforce NSEP TSP System rules and regulations, which are contained in this appendix.

(3) Act as final authority for approval, revision, or disapproval of priority actions by the Executive Office of the President and adjudicate disputes regarding either priority actions or denials of requests for priority actions by the Executive Office of the President, until superseded by the President's war emergency powers under section 706 of the Communications Act.

(4) Function (on a discretionary basis) as a sponsoring Federal organization. (See section 6(c) below.)

b. The Executive Office of the President will:

(1) During exercise of the President's war emergency powers under section 706 of the Communications Act, act as the final approval authority for priority actions or denials of requests for priority actions, adjudicating any disputes.

(2) Until the exercise of the President's war emergency powers, administer the NSEP TSP System which includes:

(a) Receiving, processing, and evaluating requests for priority actions from service users, or sponsoring Federal government organizations on behalf of service users (e.g., Department of State or Defense on behalf of foreign governments, Federal Emergency Management Agency on behalf of state and local governments, and any Federal organization on behalf of private industry entities). Action on such requests will be completed within 30 days of receipt.

(b) Assigning, revising, revalidating, or revoking priority levels as necessary or upon request of service users concerned, and denying requests for priority actions as necessary, using the categories and criteria specified in section 12 of this appendix. Action on such requests will be completed within 30 days of receipt.

(c) Maintaining data on priority level assignments.

(d) Periodically forwarding to the FCC lists of priority actions by the Executive Office of the President for review and approval.

(e) Periodically initiating reconciliation.

(f) Testing and evaluating the NSEP TSP System for effectiveness.

(g) Conducting audits as necessary. Any Telecommunications Service Priority (TSP) System user may request the Executive Office of the President to conduct an audit.

(h) Issuing, subject to review by the FCC, regulations and procedures supplemental to and consistent with this appendix regarding operation and use of the NSEP TSP System.

(i) Serving as a centralized point-of-contact for collecting and disseminating to all

interested parties (consistent with requirements for treatment of classified and proprietary material) information concerning use and abuse of the NSEP TSP System.

(j) Establishing and assisting a TSP System Oversight Committee to identify and review any problems developing in the system and recommend actions to correct them or prevent recurrence. In addition to representatives of the Executive Office of the President, representatives from private industry (including telecommunication service vendors), state and local governments, the FCC, and other organizations may be appointed to that Committee.

(k) Reporting at least quarterly to the FCC and TSP System Oversight Committee, together with any recommendations for action, the operational status of and trends in the NSEP TSP System, including:

(i) Numbers of requests processed for the various priority actions, and the priority levels assigned.

(ii) Relative percentages of services assigned to each priority level under each NSEP category and subcategory.

(iii) Any apparent serious misassignment or abuse of priority level assignments.

(iv) Any existing or developing problem.

(l) Submitting semi-annually to the FCC and TSP System Oversight Committee a summary report identifying the time and event associated with each invocation of NSEP treatment under section 9(c) of this appendix, whether the NSEP service requirement was adequately handled, and whether any additional charges were incurred. These reports will be due by April 30th for the preceding July through December and by October 31 for the preceding January through June time periods.

(m) All reports submitted to the FCC should be directed to Chief, Domestic Services Branch, Common Carrier Bureau, Washington, DC 20554.

(3) Function (on a discretionary basis) as a sponsoring Federal organization. (See section 6(c) below.)

c. Sponsoring Federal organizations will:

(1) Review and decide whether to sponsor foreign, state, and local government and private industry (including telecommunication service vendors) requests for priority actions. Federal organizations will forward sponsored requests with recommendations for disposition to the Executive Office of the President. Recommendations will be based on the categories and criteria in section 12 of this appendix.

(2) Forward notification of priority actions or denials of requests for priority actions from the Executive Office of the President to the requesting foreign, state, and local government and private industry entities.

(3) Cooperate with the Executive Office of the President during reconciliation, revalidation, and audits.

(4) Comply with any regulations and procedures supplemental to and consistent with this appendix which are issued by the Executive Office of the President.

d. Service users will:

(1) Identify services requiring priority level assignments and request and justify priority level assignments in accordance with this appendix and any supplemental regulations and procedures issued by the Executive Office of the President that are consistent with this appendix.

(2) Request and justify revalidation of all priority level assignments at least every three years.

(3) For services assigned priority levels, ensure (through contractual means or otherwise) availability of customer premises equipment and wiring necessary for end-to-end service operation by the service due date, and continued operation; and, for such services in the Emergency NSEP category, by the time that vendors are prepared to provide the services. Additionally, designate the organization responsible for the service on an end-to-end basis.

(4) Be prepared to accept services assigned priority levels by the service due dates or, for services in the Emergency NSEP category, when they are available.

(5) Pay vendors any authorized costs associated with services that are assigned priority levels.

(6) Report to vendors any failed or unusable services that are assigned priority levels.

(7) Designate a 24-hour point-of-contact for matters concerning each request for priority action and apprise the Executive Office of the President thereof.

(8) Upon termination of services that are assigned priority levels, or circumstances warranting revisions in priority level assignment (e.g., expansion of service), request and justify revocation or revision.

(9) When NSEP treatment is invoked under section 9(c) of this appendix, within 90 days following provisioning of the service involved, forward to the National Coordinating Center (see section 3(e) of this appendix) complete information identifying the time and event associated with the invocation and regarding whether the NSEP service requirement was adequately handled and whether any additional charges were incurred.

(10) Cooperate with the Executive Office of the President during reconciliation, revalidation, and audits.

(11) Comply with any regulations and procedures supplemental to and consistent with this appendix that are issued by the Executive Office of the President.

e. Non-federal service users, in addition to responsibilities prescribed above in section 6(d), will obtain a sponsoring Federal organization for all requests for priority actions. If

unable to find a sponsoring Federal organization, a non-federal service user may submit its request, which must include documentation of attempts made to obtain a sponsor and reasons given by the sponsor for its refusal, directly to the Executive Office of the President.

f. Service vendors will:

(1) When NSEP treatment is invoked by service users, provision NSEP telecommunication services before non-NSEP services, based on priority level assignments made by the Executive Office of the President. Provisioning will require service vendors to:

(a) Allocate resources to ensure best efforts to provide NSEP services by the time required. When limited resources constrain response capability, vendors will address conflicts for resources by:

(i) Providing NSEP services in order of provisioning priority level assignment (i.e., ''E'', ''1'', ''2'', ''3'', ''4'', or ''5'');

(ii) Providing Emergency NSEP services (i.e., those assigned provisioning priority level ''E'') in order of receipt of the service requests;

(iii) Providing Essential NSEP services (i.e., those assigned priority levels ''1'', ''2'', ''3'', ''4'', or ''5'') that have the same provisioning priority level in order of service due dates; and

(iv) Referring any conflicts which cannot be resolved (to the mutual satisfaction of servicer vendors and users) to the Executive Office of the President for resolution.

(b) Comply with NSEP service requests by:

(i) Allocating resources necessary to provide Emergency NSEP services as soon as possible, dispatching outside normal business hours when necessary;

(ii) Ensuring best efforts to meet requested service dates for Essential NSEP services, negotiating a mutually (customer and vendor) acceptable service due date when the requested service due date cannot be met; and

(iii) Seeking National Coordinating Center (NCC) assistance as authorized under the NCC Charter (see section 1.3, NCC Charter, dated October 9, 1985).

(2) Restore NSEP telecommunications services which suffer outage, or are reported as unusable or otherwise in need of restoration, before non-NSEP services, based on restoration priority level assignments. (NOTE: For broadband or multiple service facilities, restoration is permitted even though it might result in restoration of services assigned no or lower priority levels along with, or sometimes ahead of, some higher priority level services.) Restoration will require service vendors to restore NSEP services in order of restoration priority level assignment (i.e., ''1'', ''2'', ''3'', ''4'', or ''5'') by:

(a) Allocating available resources to restore NSEP services as quickly as practicable, dispatching outside normal business hours to restore services assigned priority levels ''1'', ''2'', and ''3'' when necessary, and services assigned priority level ''4'' and ''5'' when the next business day is more than 24 hours away;

(b) Restoring NSEP services assigned the same restoration priority level based upon which can be first restored. (However, restoration actions in progress should not normally be interrupted to restore another NSEP service assigned the same restoration priority level);

(c) Patching and/or rerouting NSEP services assigned restoration priority levels from ''1'' through ''5,'' when use of patching and/or rerouting will hasten restoration;

(d) Seeking National Coordinating Center (NCC) assistance authorized under the NCC Charter; and

(e) Referring any conflicts which cannot be resolved (to the mutual satisfaction of service vendors and users) to the Executive Office of the President for resolution.

(3) Respond to provisioning requests of customers and/or other service vendors, and to restoration priority level assignments when an NSEP service suffers an outage or is reported as unusable, by:

(a) Ensuring that vendor personnel understand their responsibilities to handle NSEP provisioning requests and to restore NSEP service; and

(b) Providing a 24-hour point-of-contact for receiving provisioning requests for Emergency NSEP services and reports of NSEP service outages or unusability.

(c) Seek verification from an authorized entity if legitimacy of a priority level assignment or provisioning request for an NSEP service is in doubt. However, processing of Emergency NSEP service requests will not be delayed for verification purposes.

(4) Cooperate with other service vendors involved in provisioning or restoring a portion of an NSEP service by honoring provisioning or restoration priority level assignments, or requests for assistance to provision or restore NSEP services, as detailed in sections 6(f)(1), (2), and (3) above.

(5) All service vendors, including resale carriers, are required to ensure that service vendors supplying underlying facilities are provided information necessary to implement priority treatment of facilities that support NSEP services.

(6) Preempt, when necessary, existing services to provide an NSEP service as authorized in section 7 of this appendix.

(7) Assist in ensuring that priority level assignments of NSEP services are accurately identified ''end-to-end'' by:

(a) Seeking verification from an authorized Federal government entity if the legitimacy of the restoration priority level assignment is in doubt;

(b) Providing to subcontractors and/or interconnecting carriers the restoration priority level assigned to a service;

(c) Supplying, to the Executive Office of the President, when acting as a prime contractor to a service user, confirmation information regarding NSEP service completion for that portion of the service they have contracted to supply;

(d) Supplying, to the Executive Office of the President, NSEP service information for the purpose of reconciliation.

(e) Cooperating with the Executive Office of the President during reconciliation.

(f) Periodically initiating reconciliation with their subcontractors and arranging for subsequent subcontractors to cooperate in the reconciliation process.

(8) Receive compensation for costs authorized through tariffs or contracts by:

(a) Provisions contained in properly filed state or Federal tariffs; or

(b) Provisions of properly negotiated contracts where the carrier is not required to file tariffs.

(9) Provision or restore only the portions of services for which they have agreed to be responsible (i.e., have contracted to supply), unless the President's war emergency powers under section 706 of the Communications Act are in effect.

(10) Cooperate withe the Executive Office of the President during audits.

(11) Comply with any regulations or procedures supplemental to and consistent with this appendix that are issued by the Executive Office of the President and reviewed by the FCC.

(12) Insure that at all times a reasonable number of public switched network services are made available for public use.

(13) Not disclose information concerning NSEP services they provide to those not having a need-to-know or might use the information for competitive advantage.

*7. Preemption of Existing Services*

When necessary to provision or restore NSEP services, service vendors may preempt services they provide as specified below. ''User'' as used in this Section means any user of a telecommunications service, including both NSEP and non-NSEP services. Prior consent by a preempted user is not required.

a. The sequence in which existing services may be preempted to provision NSEP services assigned a provisioning priority level ''E'' or restore NSEP services assigned a restoration priority level from ''1'' through ''5'':

(1) Non-NSEP services: If suitable spare services are not available, then, based on the considerations in this appendix and the service vendor's best judgment, non-NSEP services will be preempted. After ensuring a sufficient number of public switched services are available for public use, based on the service vendor's best judgment, such services may be used to satisfy a requirement for provisioning or restoring NSEP services.

(2) NSEP services: If no suitable spare or non-NSEP services are available, then existing NSEP services may be preempted to provision or restore NSEP services with higher priority level assignments. When this is necessary, NSEP services will be selected for preemption in the inverse order of priority level assignment.

(3) Service vendors who are preempting services will ensure their best effort to notify the service user of the preempted service and state the reason for and estimated duration of the preemption.

b. Service vendors may, based on their best judgment, determine the sequence in which existing services may be preempted to provision NSEP services assigned a provisioning priority of ''1'' through ''5''. Preemption is not subject to the consent of the user whose service will be preempted.

8. Requests for Priority Assignments.

All service users are required to submit requests for priority actions through the Executive Office of the President in the format and following the procedures prescribed by that Office.

*9. Assignment, Approval, Use, and Invocation of Priority Levels*

a. *Assignment and approval of priority levels.* Priority level assignments will be based upon the categories and criteria specified in section 12 of this appendix. A priority level assignment made by the Executive Office of the President will serve as that Office's recommendation to the FCC. Until the President's war emergency powers are invoked, priority level assignments must be approved by the FCC. However, service vendors are ordered to implement any priority level assignments that are pending FCC approval.

After invocation of the President's war emergency powers, these requirements may be superseded by other procedures issued by the Executive Office of the President.

b. *Use of Priority Level Assignments.*

(1) All provisioning and restoration priority level assignments for services in the Emergency NSEP category will be included in initial service orders to vendors. Provisioning priority level assignments for Essential NSEP services, however, will not usually be included in initial service orders to vendors. NSEP treatment for Essential NSEP services will be invoked and provisioning priority level assignments will be conveyed to service vendors only if the vendors cannot meet needed service dates through the normal provisioning process.

(2) Any revision or revocation of either provisioning or restoration priority level assignments will also be transmitted to vendors.

(3) Service vendors shall accept priority levels and/or revisions only after assignment by the Executive Office of the President.

NOTE: Service vendors acting as prime contractors will accept assigned NSEP priority levels only when they are accompanied by the Executive Office of the President designated service identification, *i.e.*, TSP Authorization Code. However, service vendors are authorized to accept priority levels and/or revisions from users and contracting activities before assignment by the Executive Office of the President when service vendor, user, and contracting activities are unable to communicate with either the Executive Office of the President or the FCC. Processing of Emergency NSEP service requests will not be delayed for verification purposes.

c. *Invocation of NSEP treatment.* To invoke NSEP treatment for the priority provisioning of an NSEP telecommunications service, an authorized Federal official either within, or acting on behalf of, the service user's organization must make a written or oral declaration to concerned service vendor(s) and the Executive Office of the President that NSEP treatment is being invoked. Authorized Federal officials include the head or director of a Federal agency, commander of a unified/specified military command, chief of a military service, or commander of a major military command; the delegates of any of the foregoing; or any other officials as specified in supplemental regulations or procedures issued by the Executive Office of the President. The authority to invoke NSEP treatment may be delegated only to a general or flag officer of a military service, civilian employee of equivalent grade (e.g., Senior Executive Service member), Federal Coordinating Officer or Federal Emergency Communications Coordinator/Manager, or any other such officials specified in supplemental regulations or procedures issued by the Executive Office of the President. Delegates must be designated as such in writing, and written or oral invocations must be accomplished, in accordance with supplemental regulations or procedures issued by the Executive Office of the President.

*10. Resubmission of Circuits Presently Assigned Restoration Priorities*

All circuits assigned restoration priorities must be reviewed for eligibility for initial restoration priority level assignment under the provisions of this appendix. Circuits currently assigned restoration priorities, and for which restoration priority level assignments are requested under section 8 of this appendix, will be resubmitted to the Executive Office of the President. To resubmit such circuits, service users will comply with applicable provisions of section 6(d) of this appendix.

*11. Appeal*

Service users or sponsoring Federal organizations may appeal any priority level assignment, denial, revision, revocation, approval, or disapproval to the Executive Office of the President within 30 days of notification to the service user. The appellant must use the form or format required by the Executive Office of the President and must serve the FCC with a copy of its appeal. The Executive Office of the President will act on the appeal within 90 days of receipt. Service users and sponsoring Federal organizations may only then appeal directly to the FCC. Such FCC appeal must be filed within 30 days of notification of the Executive Office of the President's decision on appeal. Additionally, the Executive Office of the President may appeal any FCC revisions, approvals, or disapprovals to the FCC. All appeals to the FCC must be submitted using the form or format required. The party filing its appeal with the FCC must include factual details supporting its claim and must serve a copy on the Executive Office of the President and any other party directly involved. Such party may file a response within 20 days, and replies may be filed within 10 days thereafter. The Commission will not issue public notices of such submissions. The Commission will provide notice of its decision to the parties of record. Any appeals to the Executive Office of the President that include a claim of new information that has not been presented before for consideration may be submitted at any time.

*12. NSEP TSP System Categories, Criteria, and Priority Levels*

a. *General.* NSEP TSP System categories and criteria, and permissible priority level assignments, are defined and explained below.

(1) The Essential NSEP category has four subcategories: National Security Leadership; National Security Posture and U.S. Population Attack Warning; Public Health, Safety, and Maintenance of Law and Order; and Public Welfare and Maintenance of National Economic Posture. Each subcategory has its own criteria. Criteria are also shown for the Emergency NSEP category, which has no sub-categories.

(2) Priority levels of ''1,'' ''2,'' ''3,'' ''4,'' and ''5'' may be assigned for provisioning and/or restoration of Essential NSEP telecommunication services. However, for Emergency NSEP telecommunications services, a priority level ''E'' is assigned for provisioning. A restoration priority level from ''1'' through ''5'' may be assigned if an Emergency NSEP service also qualifies for such a restoration priority level under the Essential NSEP category.

(3) The NSEP TSP System allows the assignment of priority levels to any NSEP telecommunications service across three time periods, or stress conditions: Peacetime/Crisis/Mobilization, Attack/War, and Post-Attack/Recovery. Priority levels will

normally be assigned only for the first time period. These assigned priority levels will apply through the onset of any attack, but it is expected that they would later be revised by surviving authorized telecommunication resource managers within the Executive Office of the President based upon specific facts and circumstances arising during the Attack/War and Post-Attack/Recovery time periods.

(4) Service users may, for their own internal use, assign subpriorities to their services assigned priority levels. Receipt of and response to any such subpriorities is optional for service vendors.

(5) The following paragraphs provide a detailed explanation of the categories, subcategories, criteria, and priority level assignments, beginning with the Emergency NSEP category.

b. *Emergency NSEP.* Telecommunications services in the Emergency NSEP category are those new services so critical as to be required to be provisioned at the earliest possible time, without regard to the costs of obtaining them.

(1) *Criteria.* To qualify under the Emergency NSEP category, the service must meet criteria directly supporting or resulting from at least one of the following NSEP functions:

(a) Federal government activity responding to a Presidentially declared disaster or emergency as defined in the Disaster Relief Act (42 U.S.C. 5122).

(b) State or local government activity responding to a Presidentially declared disaster or emergency.

(c) Response to a state of crisis declared by the National Command Authorities (e.g., exercise of Presidential war emergency powers under section 706 of the Communications Act.)

(d) Efforts to protect endangered U.S. personnel or property.

(e) Response to an enemy or terrorist action, civil disturbance, natural disaster, or any other unpredictable occurrence that has damaged facilities whose uninterrupted operation is critical to NSEP or the management of other ongoing crises.

(f) Certification by the head or director of a Federal agency, commander of a unified/specified command, chief of a military service, or commander of a major military command, that the telecommunications service is so critical to protection of life and property or to NSEP that it must be provided immediately.

(g) A request from an official authorized pursuant to the Foreign Intelligence Surveillance Act (50 U.S.C. 1801 *et seq.* and 18 U.S.C. 2511, 2518, 2519).

(2) *Priority Level Assignment.*

(a) Services qualifying under the Emergency NSEP category are assigned priority level ''E'' for provisioning.

(b) After 30 days, assignments of provisioning priority level ''E'' for Emergency NSEP services are automatically revoked unless extended for another 30-day period. A notice of any such revocation will be sent to service vendors.

(c) For restoration, Emergency NSEP services may be assigned priority levels under the provisions applicable to Essential NSEP services (see section 12(c)). Emergency NSEP services not otherwise qualifying for restoration priority level assignment as Essential NSEP may be assigned a restoration priority level ''5'' for a 30-day period. Such 30-day restoration priority level assignments will be revoked automatically unless extended for another 30-day period. A notice of any such revocation will be sent to service vendors.

c. *Essential NSEP.* Telecommunication services in the Essential NSEP category are those required to be provisioned by due dates specified by service users, or restored promptly, normally without regard to associated overtime or expediting costs. They may be assigned priority level of ''1,'' ''2,'' ''3,'' ''4,'' or ''5'' for both provisioning and restoration, depending upon the nature and urgency of the supported function, the impact of lack of service or of service interruption upon the supported function, and, for priority access to public switched services, the user's level of responsibility. Priority level assignments will be valid for no more than three years unless revalidated. To be categorized as Essential NSEP, a telecommunications service must qualify under one of the four following subcategories: National Security Leadership; National Security Posture and U.S. Population Attack Warning; Public Health, Safety and Maintenance of Law and Order; or Public Welfare and Maintenance of National Economic Posture. (NOTE.—Under emergency circumstances, Essential NSEP telecommunication services may be recategorized as Emergency NSEP and assigned a priority level ''E'' for provisioning.)

(1) *National security leadership.* This subcategory will be strictly limited to only those telecommunication services essential to national survival if nuclear attack threatens or occurs, and critical orderwire and control services necessary to ensure the rapid and efficient provisioning or restoration of other NSEP telecommunication services. Services in this subcategory are those for which a service interruption of even a few minutes would have serious adverse impact upon the supported NSEP function.

(a) *Criteria.* To qualify under this subcategory, a service must be at least one of the following:

(i) Critical orderwire, or control service, supporting other NSEP functions.

(ii) Presidential communications service critical to continuity of government and national leadership during crisis situations.

(iii) National Command Authority communications service for military command and control critical to national survival.

(iv) Intelligence communications service critical to warning of potentially catastrophic attack.

(v) Communications service supporting the conduct of diplomatic negotiations critical to arresting or limiting hostilities.

(b) *Priority level assignment.* Services under this subcategory will normally be assigned priority level ''1'' for provisioning and restoration during the Peace/Crisis/Mobilization time period.

(2) *National security posture and U.S. population attack warning.* This subcategory covers those minimum additional telecommunication services essential to maintaining an optimum defense, diplomatic, or continuity-of-government postures before, during, and after crises situations. Such situations are those ranging from national emergencies to international crises, including nuclear attack. Services in this subcategory are those for which a service interruption ranging from a few minutes to one day would have serious adverse impact upon the supported NSEP function.

(a) *Criteria.* To qualify under this subcategory, a service must support at least one of the following NSEP functions:

(i) Threat assessment and attack warning.

(ii) Conduct of diplomacy.

(iii) Collection, processing, and dissemination of intelligence.

(iv) Command and control of military forces.

(v) Military mobilization.

(vi) Continuity of Federal government before, during, and after crises situations.

(vii) Continuity of state and local government functions supporting the Federal government during and after national emergencies.

(viii) Recovery of critical national functions after crises situations.

(ix) National space operations.

(b) *Priority level assignment.* Services under this subcategory will normally be assigned priority level ''2,'' ''3,'' ''4,'' or ''5'' for provisioning and restoration during Peacetime/Crisis/Mobilization.

(3) *Public health, safety, and maintenance of law and order.* This subcategory covers the minimum number of telecommunication services necessary for giving civil alert to the U.S. population and maintaining law and order and the health and safety of the U.S. population in times of any national, regional, or serious local emergency. These services are those for which a service interruption ranging from a few minutes to one day would have serious adverse impact upon the supported NSEP functions.

(a) *Criteria.* To qualify under this subcategory, a service must support at least one of the following NSEP functions:

(i) Population warning (other than attack warning).

(ii) Law enforcement.

(iii) Continuity of critical state and local government functions (other than support of the Federal government during and after national emergencies).

(vi) Hospitals and distributions of medical supplies.

(v) Critical logistic functions and public utility services.

(vi) Civil air traffic control.

(vii) Military assistance to civil authorities.

(viii) Defense and protection of critical industrial facilities.

(ix) Critical weather services.

(x) Transportation to accomplish the foregoing NSEP functions.

(b) *Priority level assignment.* Service under this subcategory will normally be assigned priority levels ''3,'' ''4,'' or ''5'' for provisioning and restoration during Peacetime/Crisis/Mobilization.

(4) *Public welfare and maintenance of national economic posture.* This subcategory covers the minimum number of telecommunications services necessary for maintaining the public welfare and national economic posture during any national or regional emergency. These services are those for which a service interruption ranging from a few minutes to one day would have serious adverse impact upon the supported NSEP function.

(a) *Criteria.* To qualify under this subcategory, a service must support at least one of the following NSEP functions:

(i) Distribution of food and other essential supplies.

(ii) Maintenance of national monetary, credit, and financial systems.

(iii) Maintenance of price, wage, rent, and salary stabilization, and consumer rationing programs.

(iv) Control of production and distribution of strategic materials and energy supplies.

(v) Prevention and control of environmental hazards or damage.

(vi) Transportation to accomplish the foregoing NSEP functions.

(b) *Priority level assignment.* Services under this subcategory will normally be assigned priority levels ''4'' or ''5'' for provisioning and restoration during Peacetime/Crisis/Mobilization.

d. *Limitations.* Priority levels will be assigned only to the minimum number of telecommunication services required to support an NSEP function. Priority levels will not normally be assigned to backup services on a continuing basis, absent additional justification, *e.g.,* a service user specifies a requirement for physically diverse routing or contracts for additional continuity-of-service features. The Executive Office of the President may also establish limitations upon the

relative numbers of services which may be assigned any restoration priority level. These limitations will not take precedence over laws or executive orders. Such limitations shall not be exceeded absent waiver by the Executive Office of the President.

e. *Non-NSEP services.* Telecommunication services in the non-NSEP category will be those which do not meet the criteria for either Emergency NSEP or Essential NSEP.

[53 FR 47536, Nov. 23, 1988; 54 FR 152, Jan. 4, 1989; 54 FR 1471, Jan. 13, 1989]

## APPENDIX B TO PART 64—PRIORITY ACCESS SERVICE (PAS) FOR NATIONAL SECURITY AND EMERGENCY PREPAREDNESS (NSEP)

### 1. AUTHORITY

This appendix is issued pursuant to sections 1, 4(i), 201 through 205 and 303(r) of the Communications Act of 1934, as amended. Under these sections, the Federal Communications Commission (FCC) may permit the assignment and approval of priorities for access to commercial mobile radio service (CMRS) networks. Under section 706 of the Communications Act, this authority may be superseded by the war emergency powers of the President of the United States. This appendix provides the Commission's Order to CMRS providers and users to comply with policies and procedures establishing the Priority Access Service (PAS). This appendix is intended to be read in conjunction with regulations and procedures that the Executive Office of the President issues:

(1) To implement responsibilities assigned in section 3 of this appendix, or

(2) For use in the event this appendix is superseded by the President's emergency war powers. Together, this appendix and the regulations and procedures issued by the Executive Office of the President establish one uniform system of priority access service both before and after invocation of the President's emergency war powers.

### 2. BACKGROUND

a. Purpose. This appendix establishes regulatory authorization for PAS to support the needs of NSEP CMRS users.

b. Applicability. This appendix applies to the provision of PAS by CMRS licensees to users who qualify under the provisions of section 5 of this appendix.

c. Description. PAS provides the means for NSEP telecommunications users to obtain priority access to available radio channels when necessary to initiate emergency calls. It does not preempt calls in progress and is to be used during situations when CMRS network congestion is blocking NSEP call attempts. PAS is to be available to authorized NSEP users at all times in equipped CMRS markets where the service provider has voluntarily decided to provide such service. Authorized users would activate the feature on a per call basis by dialing a feature code such as *XX. PAS priorities 1 through 5 are reserved for qualified and authorized NSEP users, and those users are provided access to CMRS channels before any other CMRS callers.

d. Definitions. As used in this appendix:

1. *Authorizing agent* refers to a Federal or State entity that authenticates, evaluates and makes recommendations to the Executive Office of the President regarding the assignment of priority access service levels.

2. *Service provider* means an FCC-licensed CMRS provider. The term does not include agents of the licensed CMRS provider or resellers of CMRS service.

3. *Service user* means an individual or organization (including a service provider) to whom or which a priority access assignment has been made.

4. The following terms have the same meaning as in Appendix A to Part 64:

(a) Assignment;

(b) Government;

(c) National Communications System;

(d) National Coordinating Center;

(e) National Security Emergency Preparedness (NSEP) Telecommunications Services (excluding the last sentence);

(f) Reconciliation;

(g) Revalidation;

(h) Revision;

(i) Revocation.

e. Administration. The Executive Office of the President will administer PAS.

### 3. RESPONSIBILITIES

a. The *Federal Communications Commission* will provide regulatory oversight of the implementation of PAS, enforce PAS rules and regulations, and act as final authority for approval, revision, or disapproval of priority assignments by the Executive Office of the President by adjudicating disputes regarding either priority assignments or the denial thereof by the Executive Office of the President until superseded by the President's war emergency powers under Section 706 of the Communications Act.

b. The *Executive Office of the President (EOP)* will administer the PAS system. It will:

1. Act as the final approval or denial authority for the assignment of priorities and the adjudicator of disputes during the exercise of the President's war emergency powers under section 706 of the Communications Act.

2. Receive, process, and evaluate requests for priority actions from authorizing agents on behalf of service users or directly from service users. Assign priorities or deny requests for priority using the priorities and

criteria specified in section 5 of this appendix. Actions on such requests should be completed within 30 days of receipt.

3. Convey priority assignments to the service provider and the authorizing agent.

4. Revise, revalidate, reconcile, and revoke priority level assignments with service users and service providers as necessary to maintain the viability of the PAS system.

5. Maintain a database for PAS related information.

6. Issue new or revised regulations, procedures, and instructional material supplemental to and consistent with this appendix regarding the operation, administration, and use of PAS.

7. Provide training on PAS to affected entities and individuals.

8. Enlarge the role of the Telecommunications Service Priority System Oversight Committee to include oversight of the PAS system.

9. Report periodically to the FCC on the status of PAS.

10. Disclose content of the NSEP PAS database only as may be required by law.

c. An *Authorizing agent* shall:

1. Identify itself as an authorizing agent and its community of interest (State, Federal Agency) to the EOP. State Authorizing Agents will provide a central point of contact to receive priority requests from users within their state. Federal Authorizing Agents will provide a central point of contact to receive priority requests from federal users or federally sponsored entities.

2. Authenticate, evaluate, and make recommendations to the EOP to approve priority level assignment requests using the priorities and criteria specified in section 5 of this appendix. As a guide, PAS authorizing agents should request the lowest priority level that is applicable and the minimum number of CMRS services required to support an NSEP function. When appropriate, the authorizing agent will recommend approval or deny requests for PAS.

3. Ensure that documentation is complete and accurate before forwarding it to the EOP.

4. Serve as a conduit for forwarding PAS information from the EOP to the service user and vice versa. Information will include PAS requests and assignments, reconciliation and revalidation notifications, and other information.

5. Participate in reconciliation and revalidation of PAS information at the request of the EOP.

6. Comply with any regulations and procedures supplemental to and consistent with this appendix that are issued by the EOP.

7. Disclose content of the NSEP PAS database only to those having a need-to-know.

d. *Service users* will:

1. Determine the need for and request PAS assignments in a planned process, not waiting until an emergency has occurred.

2. Request PAS assignments for the lowest applicable priority level and minimum number of CMRS services necessary to provide NSEP telecommunications management and response functions during emergency/disaster situations.

3. Initiate PAS requests through the appropriate authorizing agent. The EOP will make final approval or denial of PAS requests and may direct service providers to remove PAS if appropriate. (Note: State and local government or private users will apply for PAS through their designated State government authorizing agent. Federal users will apply for PAS through their employing agency. State and local users in states where there has been no designation will be sponsored by the Federal agency concerned with the emergency function as set forth in Executive Order 12656. If no authorizing agent is determined using these criteria, the EOP will serve as the authorizing agent.)

4. Submit all correspondence regarding PAS to the authorizing agent.

5. Invoke PAS only when CMRS congestion blocks network access and the user must establish communications to fulfill an NSEP mission. Calls should be as brief as possible so as to afford CMRS service to other NSEP users.

6. Participate in reconciliation and revalidation of PAS information at the request of the authorizing agent or the EOP.

7. Request discontinuance of PAS when the NSEP qualifying criteria used to obtain PAS is no longer applicable.

8. Pay service providers as billed for PAS.

9. Comply with regulations and procedures that are issued by the EOP which are supplemental to and consistent with this appendix.

e. *Service providers* who offer any form of priority access service for NSEP purposes shall provide that service in accordance with this appendix. As currently described in the Priority Access and Channel Assignment Standard (IS–53–A), service providers will:

1. Provide PAS levels 1, 2, 3, 4, or 5 only upon receipt of an authorization from the EOP and remove PAS for specific users at the direction of the EOP.

2. Ensure that PAS system priorities supersede any other NSEP priority which may be provided.

3. Designate a point of contact to coordinate with the EOP regarding PAS.

4. Participate in reconciliation and revalidation of PAS information at the request of the EOP.

5. As technically and economically feasible, provide roaming service users the same grade of PAS provided to local service users.

6. Disclose content of the NSEP PAS database only to those having a need-to-know or

who will not use the information for economic advantage.

7. Comply with regulations and procedures supplemental to and consistent with this appendix that are issued by the EOP.

8. Insure that at all times a reasonable amount of CMRS spectrum is made available for public use.

9. Notify the EOP and the service user if PAS is to be discontinued as a service.

f. The *Telecommunications Service Priority Oversight Committee* will identify and review any systemic problems associated with the PAS system and recommend actions to correct them or prevent their recurrence.

4. APPEAL

Service users and authorizing agents may appeal any priority level assignment, denial, revision or revocation to the EOP within 30 days of notification to the service user. The EOP will act on the appeal within 90 days of receipt. If a dispute still exists, an appeal may then be made to the FCC within 30 days of notification of the EOP's decision. The party filing the appeal must include factual details supporting its claim and must provide a copy of the appeal to the EOP and any other party directly involved. Involved parties may file a response to the appeal made to the FCC within 20 days, and the initial filing party may file a reply within 10 days thereafter. The FCC will provide notice of its decision to the parties of record. Until a decision is made, the service will remain status quo.

5. PAS PRIORITY LEVELS AND QUALIFYING CRITERIA

The following PAS priority levels and qualifying criteria apply equally to all users and will be used as a basis for all PAS assignments. There are five levels of NSEP priorities, priority one being the highest. The five priority levels are:

1. Executive Leadership and Policy Makers
2. Disaster Response/Military Command and Control
3. Public Health, Safety and Law Enforcement Command
4. Public Services/Utilities and Public Welfare
5. Disaster Recovery

These priority levels were selected to meet the needs of the emergency response community and provide priority access for the command and control functions critical to management of and response to national security and emergency situations, particularly during the first 24 to 72 hours following an event. Priority assignments should only be requested for key personnel and those individuals in national security and emergency response leadership positions. PAS is not intended for use by all emergency service personnel.

A. Priority 1: Executive Leadership and Policy Makers.

Users who qualify for the Executive Leadership and Policy Makers priority will be assigned priority one. A limited number of CMRS technicians who are essential to restoring the CMRS networks shall also receive this highest priority treatment. Examples of those eligible include:

(i) The President of the United States, the Secretary of Defense, selected military leaders, and the minimum number of senior staff necessary to support these officials;

(ii) State governors, lieutenant governors, cabinet-level officials responsible for public safety and health, and the minimum number of senior staff necessary to support these officials; and

(iii) Mayors, county commissioners, and the minimum number of senior staff to support these officials.

B. Priority 2: Disaster Response/Military Command and Control

Users who qualify for the Disaster Response/Military Command and Control priority will be assigned priority two. Individuals eligible for this priority include personnel key to managing the initial response to an emergency at the local, state, regional and federal levels. Personnel selected for this priority should be responsible for ensuring the viability or reconstruction of the basic infrastructure in an emergency area. In addition, personnel essential to continuity of government and national security functions (such as the conduct of international affairs and intelligence activities) are also included in this priority. Examples of those eligible include:

(i) Federal emergency operations center coordinators, *e.g.*, Manager, National Coordinating Center for Telecommunications, National Interagency Fire Center, Federal Coordinating Officer, Federal Emergency Communications Coordinator, Director of Military Support;

(ii) State emergency Services director, National Guard Leadership, State and Federal Damage Assessment Team Leaders;

(iii) Federal, state and local personnel with continuity of government responsibilities;

(iv) Incident Command Center Managers, local emergency managers, other state and local elected public safety officials; and

(v) Federal personnel with intelligence and diplomatic responsibilities.

C. Priority 3: Public Health, Safety, and Law Enforcement Command

Users who qualify for the Public Health, Safety, and Law Enforcement Command priority will be assigned priority three. Eligible for this priority are individuals who direct operations critical to life, property, and maintenance of law and order immediately

following an event. Examples of those eligible include:

(i) Federal law enforcement command;

(ii) State police leadership;

(iii) Local fire and law enforcement command;

(iv) Emergency medical service leaders;

(v) Search and rescue team leaders; and

(vi) Emergency communications coordinators.

D. Priority 4: Public Services/Utilities and Public Welfare

Users who qualify for the Public Services/Utilities and Public Welfare priority will be assigned priority four. Eligible for this priority are those users whose responsibilities include managing public works and utility infrastructure damage assessment and restoration efforts and transportation to accomplish emergency response activities. Examples of those eligible include:

(i) Army Corps of Engineers leadership;

(ii) Power, water and sewage and telecommunications utilities; and

(iii) Transportation leadership.

E. Priority 5: Disaster Recovery

Users who qualify for the Disaster Recovery priority will be assigned priority five. Eligible for this priority are those individuals responsible for managing a variety of recovery operations after the initial response has been accomplished. These functions may include managing medical resources such as supplies, personnel, or patients in medical facilities. Other activities such as coordination to establish and stock shelters, to obtain detailed damage assessments, or to support key disaster field office personnel may be included. Examples of those eligible include:

(i) Medical recovery operations leadership;

(ii) Detailed damage assessment leadership;

(iii) Disaster shelter coordination and management; and

(iv) Critical Disaster Field Office support personnel.

6. LIMITATIONS

PAS will be assigned only to the minimum number of CMRS services required to support an NSEP function. The Executive Office of the President may also establish limitations upon the relative numbers of services that may be assigned PAS or the total number of PAS users in a serving area. These limitations will not take precedence over laws or executive orders. Limitations established shall not be exceeded.

[65 FR 48396, Aug. 8, 2000]

EFFECTIVE DATE NOTE: At 65 FR 48396, Aug. 8, 2000, Appendix B was added to Part 64, effective Oct. 10, 2000.

# PART 65—INTERSTATE RATE OF RETURN PRESCRIPTION PROCEDURES AND METHODOLOGIES

## Subpart A—General

Sec.
65.1 Application of part 65.

## Subpart B—Procedures

65.100 Participation and acceptance of service designation.
65.101 Initiation of unitary rate of return prescription proceedings.
65.102 Petitions for exclusion from unitary treatment and for individual treatment in determining authorized return for interstate exchange access service.
65.103 Procedures for filing rate of return submissions.
65.104 Page limitations for rate of return submissions.
65.105 Discovery.

## Subpart C—Exchange Carriers

65.300 Calculations of the components and weights of the cost of capital.
65.301 Cost of equity.
65.302 Cost of debt.
65.303 Cost of preferred stock.
65.304 Capital structure.
65.305 Calculation of the weighted average cost of capital.
65.306 Calculation accuracy.
65.450 Net income.

## Subpart D—Interexchange Carriers

65.500 Net income.

## Subpart E—Rate of Return Reports

65.600 Rate of return reports.

## Subpart F—Maximum Allowable Rates of Return

65.700 Determining the maximum allowable rate of return.
65.701 Period of review.
65.702 Measurement of interstate service earnings.

## Subpart G—Rate Base

65.800 Rate base.
65.810 Definitions.
65.820 Included items.
65.830 Deducted items.

AUTHORITY: Secs. 4, 201, 202, 203, 205, 218, 403, 48 Stat., 1066, 1072, 1077, 1094, as amended, 47 U.S.C. 151, 154, 201, 202, 203, 204, 205, 218, 219, 220, 403.

## Subpart A—General

### § 65.1 Application of part 65.

(a) This part establishes procedures and methodologies for Commission prescription of an authorized unitary interstate exchange access rate of return and individual rates of return for the interstate exchange access rates of certain carriers pursuant to § 65.102. This part shall apply to those interstate services of local exchange carriers as the Commission shall designate by rule or order, except that all local exchange carriers shall provide to the Commission that information which the Commission requests for purposes of conducting prescription proceedings pursuant to this part.

(b) Local exchange carriers subject to §§ 61.41 through 61.49 of this chapter are exempt from the requirements of this part with the following exceptions:

(1) Except as otherwise required by Commission order, carriers subject to §§ 61.41 through 61.49 of this chapter shall employ the rate of return value calculated for interstate access services in complying with any applicable rules under parts 36 and 69 that require a return component;

(2) Carriers subject to §§ 61.41 through 61.49 of this chapter shall be subject to § 65.600(d);

(3) Carriers subject to §§ 61.41 through 61.49 of this chapter shall continue to comply with the prescribed rate of return when offering any services specified in § 61.42(f) of this chapter unless the Commission otherwise directs; and

(4) Carriers subject to §§ 61.41 through 61.49 of this chapter shall comply with Commission information requests made pursuant to § 65.1(a).

[60 FR 28543, June 1, 1995]

## Subpart B—Procedures

### § 65.100 Participation and acceptance of service designation.

(a) All interstate exchange access carriers, their customers, and any member of the public may participate in rate of return proceedings to determine the authorized unitary interstate exchange access or individual interstate exchange access rates of return authorized pursuant to § 65.102.

(b) Participants shall state in their initial pleading in a prescription proceeding whether they wish to receive service of documents and other material filed in the proceeding. Participants that wish to receive service by hand on the filing dates when so required by this part 65 shall specify in their initial pleading in a prescription proceeding, as specified in § 65.103 (b) and (c), an agent for acceptance of service by hand in the District of Columbia. The participant may elect in its pleading to receive service by mail or upon an agent at another location. When such an election is made, other participants need not complete service on the filing date, and requests for extension of time due to delays in completion of service will not be entertained.

[60 FR 28544, June 1, 1995]

### § 65.101 Initiation of unitary rate of return prescription proceedings.

(a) Whenever the Commission determines that the monthly average yields on ten (10) year United States Treasury securities remain, for a consecutive six (6) month period, at least 150 basis points above or below the average of the monthly average yields in effect for the consecutive six (6) month period immediately prior to the effective date of the current prescription, the Commission shall issue a notice inquiring whether a rate of return prescription according to this part should commence. This notice shall state:

(1) The deadlines for filing initial and reply comments regarding the notice;

(2) The cost of debt, cost of preferred stock, and capital structure computed in accordance with §§ 65.302, 65.303, and 65.304; and

(3) Such other information as the Commission may deem proper.

(b) Based on the information submitted in response to the notice described in § 65.101(a), and on any other information specifically identified, the Commission may issue a notice initiating a prescription proceeding pursuant to this part.

(c) The Chief, Common Carrier Bureau, may issue the notice described in § 65.101(a).

[60 FR 28544, June 1, 1995]

### § 65.102 Petitions for exclusion from unitary treatment and for individual treatment in determining authorized return for interstate exchange access service.

(a) Exclusion from unitary treatment will be granted for a period of two years if the cost of capital for interstate exchange service is so low as to be confiscatory because it is outside the zone of reasonableness for the individual carrier's required rate of return for interstate exchange access services.

(b) A petition for exclusion from unitary treatment and for individual treatment must plead with particularity the exceptional facts and circumstances that justify individual treatment. The showing shall include a demonstration that the exceptional facts and circumstances are not of transitory effect, such that exclusion for a period of a least two years is justified.

(c) A petition for exclusion from unitary treatment and for individual treatment may be filed at any time. When a petition is filed at a time other than that specified in § 65.103(b)(2), the petitioner must provide compelling evidence that its need for individual treatment is not simply the result of short-term fluctuations in the cost of capital or similar events.

[60 FR 28544, June 1, 1995]

### § 65.103 Procedures for filing rate of return submissions.

(a) Rate of return submissions listed in § 65.103 (b)(1) and (c) may include any relevant information, subject to the page limitations of § 65.104. The Chief, Common Carrier Bureau, may require from carriers providing interstate services, and from other participants submitting rate of return submissions, data, studies or other information that are reasonably calculated to lead to a full and fair record.

(b) In proceedings to prescribe an authorized unitary rate of return on interstate access services, interested parties may file direct case submissions, responses, and rebuttals. Direct case submissions shall be filed within sixty (60) calendar days following the effective date of a Commission notice initiating a rate of return proceeding pursuant to § 65.101(b). Rate of return submissions responsive to the direct case submissions shall be filed within sixty (60) calendar days after the deadline for filing direct case submissions. Rebuttal submissions shall be field within twenty-one (21) calendar days after the deadline for filing responsive submissions.

(c) Petitions for exclusion from unitary treatment and for individual treatment may be filed on the same date as the deadline for filing responsive rate of return submissions. Oppositions shall be filed within 35 calendar days thereafter. Rebuttal submissions shall be filed within 21 calendar days after the deadline for filing responsive submissions.

(d) An original and 4 copies of all rate of return submissions shall be filed with the Secretary.

(e) The filing party shall serve a copy of each rate of return submission, other than an initial submission, on all participants who have filed a designation of service notice pursuant to § 65.100(b).

[60 FR 28544, June 1, 1995]

### § 65.104 Page limitations for rate of return submissions.

Rate of return submissions, including all argument, attachments, appendices, supplements, and supporting materials, such as testimony, data and documents, but excluding tables of contents and summaries of argument, shall be subject to the following double spaced typewritten page limits:

(a) The direct case submission of any participant shall not exceed 70 pages in length.

(b) The responsive submission of any participant shall not exceed 70 pages in length.

(c) The rebuttal submission of any participant shall not exceed 50 pages in length.

(d) Petitions for exclusion from unitary treatment shall not exceed 70 pages in length. Oppositions to petitions for exclusion shall not exceed 50 pages in length. Rebuttals shall not exceed 35 pages in length.

[60 FR 28544, June 1, 1995]

**§ 65.105 Discovery.**

(a) Participants shall file with each rate of return submission copies of all information, including studies, financial analysts' reports, and any other documents relied upon by participants or their experts in the preparation of their submission. Information filed pursuant to this paragraph for which protection from disclosure is sought shall be filed subject to protective orders which shall be duly granted by the Chief, Common Carrier Bureau, for good cause shown.

(b) Participants may file written interrogatories and requests for documents directed to any rate of return submission and not otherwise filed pursuant to § 65.105(a). The permissible scope of examination is that participants may be examined upon any matter, not privileged, that will demonstrably lead to the production of material, relevant, decisionally significant evidence.

(c) Discovery requests pursuant to § 65.105(b), including written interrogatories, shall be filed within 14 calendar days after the filing of the rate of return submission to which the request is directed. Discovery requests that are not opposed shall be complied with within 14 calendar days of the request date.

(d) Oppositions to discovery requests made pursuant to § 65.105(b), including written interrogatories, shall be filed within 7 calendar days after requests are filed. The Chief, Common Carrier Bureau, shall rule upon any such opposition. Except as stayed by the Commission or a Court, any required response to a discovery request that is opposed shall be provided within 14 calendar days after release of the ruling of the Chief, Common Carrier Bureau.

(e) An original and 4 copies of all information described in § 65.105(a) and all requests, oppositions, and responses made pursuant to § 65.105 (a), (b) and (d) shall be filed with the Secretary.

(f) Service of requests, oppositions, and responses made pursuant to § 65.105 (b) and (d) shall be made upon all participants who have filed a designation of service notice pursuant to § 65.100(b). Service of requests upon participants who have filed designation of service notices pursuant to § 65.100(b) shall be made by hand on the filing dates thereof.

[60 FR 28544, June 1, 1995]

## Subpart C—Exchange Carriers

**§ 65.300 Calculations of the components and weights of the cost of capital.**

(a) Sections 65.301 through 65.303 specify the calculations that are to be performed in computing cost of debt, cost of preferred stock, and financial structure weights for prescription proceedings. The calculations shall determine, where applicable, a composite cost of debt, a composite cost of preferred stock, and a composite financial structure for all local exchange carriers with annual revenues in excess of $100 million. The calculations shall be based on data reported to the Commission in FCC Report 43–02. (See 47 CFR 43.21). The results of the calculations shall be used in the represcription proceeding to which they relate unless the record in that proceeding shows that their use would be unreasonable.

(b) Excluded from cost of capital calculations made pursuant to § 65.300 shall be those sources of financing that are not investor supplied, or that are otherwise subtracted from a carrier's rate base pursuant to Commission orders governing the calculation of net rate base amounts in tariff filings that are made pursuant to section 203 of the Communications Act of 1934, 47 U.S.C. 203, or that were treated as ''zero cost'' sources of financing in section 450 and subpart G of this part 65. Specifically excluded are: accounts payable, accrued taxes, accrued interest, dividends payable, deferred credits and operating reserves, deferred taxes and deferred tax credits.

[60 FR 28545, June 1, 1995]

**§ 65.301 Cost of equity.**

The cost of equity shall be determined in represcription proceedings after giving full consideration to the evidence in the record, including such evidence as the Commission may officially notice.

[60 FR 28545, June 1, 1995]

**§ 65.302 Cost of debt.**

The formula for determining the cost of debt is equal to:

$$\text{Embedded Cost of Debt} = \frac{\text{Total Annual Interest Expense}}{\text{Average Outstanding Debt}}$$

Where:

''Total Annual Interest Expense'' is the total interest expense for the most recent two years for all local exchange carriers with annual revenues of $100 million or more.

''Average Outstanding Debt'' is the average of the total debt for the most recent two years for all local exchange carriers with annual revenues of $100 million or more.

[60 FR 28545, June 1, 1995]

**§ 65.303 Cost of preferred stock.**

The formula for determining the cost of preferred stock is:

$$\text{Cost of Preferred Stock} = \frac{\text{Total Annual Preferred Dividends}}{\text{Proceeds from the Issuance of Preferred Stock}}$$

Where:

''Total Annual Preferred Dividends'' is the total dividends on preferred stock for the most recent two years for all local exchange carriers with annual revenues of $100 million or more. ''Proceeds from the Issuance of Preferred Stock'' is the average of the total net proceeds from the issuance of preferred stock for the most recent two years for all local exchange carriers with annual revenues of $100 million or more.

[60 FR 28545, June 1, 1995]

**§ 65.304 Capital structure.**

The proportion of each cost of capital component in the capital structure is equal to:

Proportion in the capital structure =

$$\frac{\text{Book Value of particular component}}{\text{Book Value of Debt} + \text{Book Value of Preferred Stock} + \text{Book Value of Equity}}$$

Where:

''Book Value of particular component'' is the total of the book values of that component for all local exchange carriers with annual revenues of $100 million or more.

''Book Value of Debt+Book Value of Preferred Stock+Book Value of Equity'' is the total of the book values of all the components for all local exchange carriers with annual revenues of $100 million or more.

The total of all proportions shall equal 1.00.

[60 FR 28545, June 1, 1995]

**§ 65.305 Calculation of the weighted average cost of capital.**

(a) The composite weighted average cost of capital is the sum of the cost of debt, the cost of preferred stock, and the cost of equity, each weighted by its proportion in the capital structure of the telephone companies.

(b) Unless the Commission determines to the contrary in a prescription

proceeding, the composite weighted average cost of debt and cost of preferred stock is the composite weight computed in accordance with § 65.304 multiplied by the composite cost of the component computed in accordance with § 65.301 or § 65.302, as applicable. The composite weighted average cost of equity will be determined in each prescription proceeding.

[60 FR 28546, June 1, 1995]

### § 65.306 Calculation accuracy.

In a prescription proceeding, the final determinations of the cost of equity, cost of debt, cost of preferred stock and their capital structure weights shall be accurate to two decimal places.

[60 FR 28546, June 1, 1995]

### § 65.450 Net income.

(a) Net income shall consist of all revenues derived from the provision of interstate telecommunications services regulated by this Commission less expenses recognized by the Commission as necessary to the provision of these services. The calculation of expenses entering into the determination of net income shall include the interstate portion of plant specific operations (Accounts 6110–6441), plant nonspecific operations (Accounts 6510–6565), customer operations (Accounts 6610–6623), corporate operations (Accounts 6710–6790), other operating income and expense accounts (Accounts 7100–7160), and operating taxes (Accounts 7200–7250), except to the extent this Commission specifically provides to the contrary.

(b) Gains and losses related to the disposition of plant in service items, shall be handled as follows:

(1) Gains related to property sold to others and leased back under capital leases for use in telecommunications services shall be recorded in Account 4360 (Other Deferred Credits) and credited to Account 6563 (Amortization Expense—Tangible) over the amortization period established for the capital lease;

(2) Gains or losses related to the disposition of land and other nondepreciable items recorded in Account 7150 (Gains and Losses Resulting from the Sale of Land and Artworks) shall be included in net income for ratemaking purposes, but adjusted to reflect the relative amount of time such property was used in regulated operations and included in the rate base; and

(3) Proceeds related to the disposition of property depreciated on a group basis and used jointly in regulated and nonregulated activities, including sale-leaseback arrangements for property depreciated on a group basis, shall be credited to the related reserves and attributed to regulated and nonregulated in proportion to the accumulated regulated and nonregulated depreciation for that group.

(c) Gains or losses related to the disposition of property that was never included in the rate base shall not be considered for ratemaking purposes.

(d) Except for the allowance for funds used during construction, reasonable charitable deductions and interest related to customer deposits, the amounts recorded as nonoperating income and expenses and taxes (Accounts 7300–7450) and interest and related items (Accounts 7500–7540) and extraordinary items (Accounts 7600–7640) shall not be included unless this Commission specifically determines that particular items recorded in those accounts shall be included.

[53 FR 1029, Jan. 15, 1988, as amended at 60 FR 12139, Mar. 6, 1995]

## Subpart D—Interexchange Carriers

### § 65.500 Net income.

The net income methodology specified in § 65.450 shall be utilized by all interexchange carriers that are so designated by Commission order.

[60 FR 28546, June 1, 1995]

## Subpart E—Rate of Return Reports

### § 65.600 Rate of return reports.

(a) Subpart E shall apply to those interstate communications common carriers and exchange carriers that are so designated by Commission order.

(b) Each local exchange carrier or group of affiliated carriers which is not subject to §§ 61.41 through 61.49 of this chapter and which has filed individual

access tariffs during the preceding enforcement period shall file with the Commission within three (3) months after the end of each calendar year, an annual rate of return monitoring report which shall be the enforcement period report. Reports shall be filed on the appropriate report form prescribed by the Commission (see § 1.795 of this chapter) and shall provide full and specific answers to all questions propounded and information requested in the currently effective report form. The number of copies to be filed shall be specified in the applicable report form. At least one copy of the report shall be signed on the signature page by the responsible officer. A copy of each report shall be retained in the principal office of the respondent and shall be filed in such a manner as to be readily available for reference and inspection. Final adjustments to the enforcement period report shall be made by September 30 of the year following the enforcement period to ensure that any refunds can be properly reflected in an annual access filing.

(c) Each interexchange carrier subject to §§ 61.41 through 61.49 shall file with the Commission, within three (3) months after the end of each calendar year, the total interstate rate of return for that year for all interstate services subject to regulation by the Commission. Each such filing shall include a report of the total revenues, total expenses and taxes, operating income, and the rate base. A copy of the filing shall be retained in the principal office of the respondent and shall be filed in such manner as to be readily available for reference and inspection.

(d)(1) Each local exchange carrier or group of affiliated carriers subject to §§ 61.41 through 61.49 of this chapter shall file with the Commission within three (3) months after the end of each calendar year a report of its total interstate rate of return for that year. Such filings shall include a report of the total revenues, total expenses and taxes, operating income, and the rate base. Reports shall be filed on the appropriate form prescribed by the Commission (see § 1.795 of this chapter) and shall provide full and specific answers to all questions propounded and information requested in the currently effective form. The number of copies to be filed shall be specified in the applicable report form. At least one copy of the report shall be retained in the principal office of the respondent and shall be filed in such manner as to be readily available for reference and inspection.

(2) Each local exchange carrier or group of affiliated carriers subject to §§ 61.41 through 61.49 of this chapter shall file with the Commission within fifteen (15) months after the end of each calendar year a report reflecting any corrections or modifications to the report filed pursuant to paragraph (d)(1) of this section. Reports shall be filed on the appropriate form prescribed by the Commission (see § 1.795 of this chapter) and shall provide full and specific answers to all questions propounded and information requested in the currently effective form. The number of copies to be filed shall be specified in the applicable report form. At least one copy of the report shall be retained in the principal office of the respondent and shall be filed in such manner as to be readily available for reference and inspection.

[52 FR 274, Jan. 5, 1987, as amended at 54 FR 19844, May 8, 1989; 55 FR 42385, Oct. 19, 1990; 56 FR 21617, May 10, 1991; 62 FR 5166, Feb. 4, 1997]

## Subpart F—Maximum Allowable Rates of Return

### § 65.700 Determining the maximum allowable rate of return.

(a) The maximum allowable rate of return for any exchange carrier's earnings on any access service category shall be determined by adding a fixed increment of four-tenths of one percent of the exchange carrier prescribed rate of return.

(b) The maximum allowable rate of return for any exchange carrier's overall interstate earnings for all access service categories shall be determined by adding a fixed increment of one-quarter of one percent to the exchange carrier prescribed rate of return.

(c) The maximum allowable rate of return for rates filed by local exchange carrier subject to § 61.50 of this chapter, shall be determined by adding a fixed increment of one and one-half percent

to the carriers prescribed rate of return.

[51 FR 11034, Apr. 1, 1986, as amended at 58 FR 36149, July 6, 1993; 60 FR 28546, June 1, 1995]

### § 65.701 Period of review.

For both exchange and interexchange carriers subject to this part, interstate earnings shall be measured over a two year period to determine compliance with the maximum allowable rate of return. The review periods shall commence on January 1 in odd-numbered years and shall end on December 31 in even-numbered years.

[60 FR 28546, June 1, 1995]

### § 65.702 Measurement of interstate service earnings.

(a) For exchange carriers, earnings shall be measured separately for each access service category for purposes of determining compliance with the maximum allowable rate of return. The access service categories shall be: an aggregated category consisting of Special Access, § 69.113, and Contribution Charges for Special Access Expanded Interconnection, § 69.122; Connection Charges for Expanded Interconnection, § 69.121; Common Line, §§ 69.104–69.105; and an aggregated category consisting of Line Termination, § 69.106, Intercept, § 69.108, Local Switching, § 69.107, Transport, §§ 69.110–69.112, 69.124, 69.125, and Information, § 69.109. The Billing and Collection access element shall not be included in any access service category for purposes of this part. The Commission will also separately review exchange carrier overall interstate earnings subject to this part for determining compliance with the maximum allowable rate of return determined by § 65.700(b).

(b) For exchange carriers, earnings shall be measured for purposes of determining compliance with the maximum allowable rates of return separately for each study area; provided, however, that if the carrier has filed or concurred in access tariffs aggregating costs and rates for two or more study areas, the earnings will be determined for the aggregated study areas rather than for each study area separately. If an exchange carrier has not utilized the same level of study area aggregation during the entire two-year earnings review period, then the carrier's earnings will be measured for the entire two-year period on the basis of the tariffs in effect at the end of the second year of the two-year review period; provided, however, that if tariffs representing a higher level of study area aggregation were not in effect for at least eight months in the second year, then the carrier's earnings will be measured on the basis of the study area level of aggregation in effect for the majority of the two-year period; provided further, that any carrier that was not a member of the National Exchange Carrier Association or other voluntary pools for both years of the two-year review period will have its earnings reviewed individually for the full two-year period.

[51 FR 11034, Apr. 1, 1986, as amended at 57 FR 54719, Nov. 20, 1992; 58 FR 48763, Sept. 17, 1993; 60 FR 28546, June 1, 1995]

## Subpart G—Rate Base

SOURCE: 53 FR 1029, Jan. 15, 1988, unless otherwise noted.

### § 65.800 Rate base.

The rate base shall consist of the interstate portion of the accounts listed in § 65.820 that has been invested in plant used and useful in the efficient provision of interstate telecommunications services regulated by this Commission, minus any deducted items computed in accordance with § 65.830.

### § 65.810 Definitions.

As used in this subpart ''account xxxx'' means the account of that number kept in accordance with the Uniform System of Accounts for Class A and Class B Telecommunications Companies in 47 CFR part 32.

### § 65.820 Included items.

(a) *Telecommunications Plant.* The interstate portion of all assets summarized in Account 2001 (Telecommunications Plant in Service) and Account 2002 (Property Held for Future Use), net of accumulated depreciation and

amortization, and Account 2003 (Telecommunications Plant Under Construction), and, to the extent such inclusions are allowed by this Commission, Account 2005 (Telecommunications Plant Adjustment), net of accumulated amortization. Any interest cost for funds used during construction capitalized on assets recorded in these accounts shall be computed in accordance with the procedures in § 32.2000(c)(2)(x) of this chapter.

(b) *Material and Supplies.* The interstate portion of assets summarized in Account 1220.1 (Material and Supplies).

(c) *Noncurrent Assets.* The interstate portion of Class B Rural Telephone Bank stock contained in Account 1402 (Investment in Nonaffiliated Companies) and the interstate portion of assets summarized in Account 1410 (Other Noncurrent Assets), Account 1438 (Deferred Maintenance and Retirements), and Account 1439 (Deferred Charges) only to the extent that they have been specifically approved by this Commission for inclusion. Otherwise, the amounts in accounts 1401–1500 shall not be included.

(d) *Cash Working Capital.* The average amount of investor-supplied capital needed to provide funds for a carrier's day-to-day interstate operations. Class A carriers may calculate a cash working capital allowance either by performing a lead-lag study of interstate revenue and expense items or by using the formula set forth in paragraph (e) of this section. Class B carriers, in lieu of performing a lead-lag study or using the formula in paragraph (e) of this section, may calculate the cash working capital allowance using a standard allowance which will be established annually by the Chief, Common Carrier Bureau. When either the lead-lag study or formula method is used to calculate cash working capital, the amount calculated under the study or formula may be increased by minimum bank balances and working cash advances to determine the cash working capital allowance. Once a carrier has selected a method of determining its cash working capital allowance, it shall not change to an optional method from one year to the next without Commission approval.

(e) In lieu of a full lead-lag study, carriers may calculate the cash working capital allowance using the following formula.

(1) Compute the weighted average revenue lag days as follows:

(i) Multiply the average revenue lag days for interstate revenues billed in arrears by the percentage of interstate revenues billed in arrears.

(ii) Multiply the average revenue lag days for interstate revenues billed in advance by the percentage of interstate revenues billed in advance. (Note: a revenue lead should be shown as a negative lag.)

(iii) Add the results of paragraphs (e)(1) (i) and (ii) of this section to determine the weighted average revenue lag days.

(2) Compute the weighted average expense lag days as follows:

(i) Multiply the average lag days for interstate expenses (*i.e.*, cash operating expenses plus interest) paid in arrears by the percentage of interstate expenses paid in arrears.

(ii) Multiply the average lag days for interstate expenses paid in advance by the percentage of interstate expenses paid in advance. (Note: an expense lead should be shown as a negative lag.)

(iii) Add the results of paragraphs (e)(2) (i) and (ii) of this section to determine the weighted average expense lag days.

(3) Compute the weighted net lag days by deducting the weighted average expense lag days from the weighted average revenue lag days.

(4) Compute the percentage of a year represented by the weighted net lag days by dividing the days computed in paragraph (e)(3) of this section by 365 days.

(5) Compute the cash working capital allowance by multiplying the interstate cash operating expenses (*i.e.*, operating expenses minus depreciation and amortization) plus interest by the percentage computed in paragraph (e)(4) of this section.

[54 FR 9048, Mar. 3, 1989, as amended at 60 FR 12139, Mar. 6, 1995]

### § 65.830 Deducted items.

(a) The following items shall be deducted from the interstate rate base.

(1) The interstate portion of deferred taxes (Accounts 4100 and 4340).

(2) The interstate portion of customer deposits (Account 4040).

(3) The interstate portion of other long-term liabilities (Account4310) that were derived from the expenses specified in §65.450(a).

(4) The interstate portion of other deferred credits (Account 4360) to the extent they arise from the provision of regulated telecommunications services. This shall include deferred gains related to sale-leaseback arrangements.

(b) The interstate portion of deferred taxes, customer deposits and other deferred credits shall be determined as prescribed by 47 CFR part 36.

(c) The interstate portion of other long-term liabilities (Account 4310) shall bear the same proportionate relationships as the interstate/intrastste expenses which gave rise to the liability.

[54 FR 9049, Mar. 3, 1989, as amended at 62 FR 15118, Mar. 31, 1997]

# PART 68—CONNECTION OF TERMINAL EQUIPMENT TO THE TELEPHONE NETWORK

## Subpart A—General

Sec.
68.1 Purpose.
68.2 Scope.
68.3 Definitions.
68.4 Hearing aid-compatible telephones.
68.5 Waivers.
68.6 Telephones with volume control.

## Subpart B—Conditions on Use of Terminal Equipment

68.100 General.
68.102 Registration requirement.
68.104 Means of connection.
68.106 Notification to telephone company.
68.108 Incidence of harm.
68.110 Compatibility of the telephone network and terminal equipment.
68.112 Hearing aid-compatibility.
68.160 Designation of Telecommunication Certification Bodies (TCBs).
68.162 Requirements for Telecommunication Certification Bodies.

## Subpart C—Registration Procedures

68.200 Application for equipment registration.
68.202 Public notice.
68.204 Comments and replies.
68.206 Grant of application.
68.208 Dismissal and return of application.
68.210 Denial of application.
68.211 Registration revocation procedures.
68.212 Assignment of equipment registration.
68.213 Installation of other than ''fully protected'' non-system simple customer premises wiring.
68.214 Changes in registered equipment and circuitry.
68.215 Installation of other than ''fully-protected'' system premises wiring that serves more than four subscriber access lines.
68.216 Repair of registered terminal equipment and registered protective circuitry.
68.218 Responsibility of grantee of equipment registration.
68.220 Cross reference.
68.224 Notice of non-hearing aid compatibility.
68.226 Registration of digital systems components.

## Subpart D—Conditions for Registration

68.300 Labeling requirements.
68.302 Environmental simulation.
68.304 Leakage current limitations.
68.306 Hazardous voltage limitations.
68.308 Signal power limitations.
68.310 Transverse balance limitations.
68.312 On-hook impedance limitations.
68.314 Billing protection.
68.316 Hearing aid compatibility: Technical requirements.
68.317 Hearing aid compatibility volume control: technical standards.
68.318 Additional limitations.

## Subpart E—Complaint Procedures

68.400 Content.
68.402 Amended complaints.
68.404 Number of copies.
68.406 Service.
68.408 Answers to complaints and amended complaints.
68.410 Replies to answers or amended answers.
68.412 Defective pleadings.
68.414 Hearing aid-compatibility: Enforcement.

## Subpart F—Connectors

68.500 Specifications.
68.502 Configurations.
68.504 Universal patent license agreement.
68.506 Configurations used to connect multiline communications systems such as Private Branch Exchange (PBX) and key telephone systems.

AUTHORITY: 47 U.S.C. 154, 303.

## Subpart A—General

AUTHORITY: Secs. 4, 5, 303, 48 Stat., as amended, 1066, 1068, 1082; (47 U.S.C. 154, 155, 303).

SOURCE: 45 FR 20841, Mar. 31, 1980, unless otherwise noted.

### §68.1 Purpose.

The purpose of the rules and regulations in this part is to provide for uniform standards for the protection of the telephone network from harms caused by the connection of terminal equipment and associated wiring thereto, and for the compatibility of hearing aids and telephones so as to ensure that persons with hearing aids have reasonable access to the telephone network.

(47 U.S.C. 151, 154(i), 154(j), 201–205, 218, 220, 313, 403, 412, and 5 U.S.C. 553)

[49 FR 21733, May 23, 1984]

### §68.2 Scope.

(a) *General.* Except as provided for in paragraphs (b), (c), (d), (e), (f), (g), (h), (i), (j) and (k) of this section, the rules and regulations apply to direct connection:

(1) Of all terminal equipment to the public switched telephone network, for use in conjunction with all services other than party line service;

(2) Of all terminal equipment to channels furnished in connection with foreign exchange lines (customer-premises end), the station end of off-premises stations associated with PBX and Centrex services, trunk-to-station tie lines (trunk end only) and switched service network station lines (CCSA and EPSCS); and

(3) Of all PBX (or similar) systems to private line services for tie trunk type interfaces and off premises station lines. Services may only be added to this section as a result of rulemaking proceedings and equipment connected to such added services is afforded a reasonable transition period.

(4) Of all customer premises wiring associated with one and two-line (non-system) residential and business telephone service.

(5) Of all terminal equipment to subrate and 1.544 Mbps digital services.

(6) Of registered terminal equipment or registered protective circuitry to Local Area Data Channels and to channels which are similar to Local Area Data Channels that are obtained as special assemblies.

(7) Of all terminal equipment or systems to voiceband private line channels for 2-point and multipoint private line services (excluding those identified in Category II, AT&T Tariff F.C.C. No. 260 or subsequent revisions) that utilize loop start, ringdown or inband signaling; or voiceband metallic channels.

(8) Of the types of test equipment specified in §68.3, Definitions.

(9) Of all terminal equipment to Public Switched Digital Service (PSDS) Type I, II or III.

(10) Of all terminal equipment to the Integrated Services Digital Network (ISDN) Basic Rate Access (BRA) or Primary Rate Access (PRA).

(b) *Grandfathered terminal equipment (other than PBX and key telephone systems) and protective circuitry.* All terminal equipment (other than PBX and key telephone systems) and protective circuitry of a type directly connected to the public switched telephone network and services identified in §68.2(a)(2) as of October 17, 1977, may be connected thereafter up to July 1, 1979—and may remain connected for life—without registration unless subsequently modified.

(c) *Grandfathered systems (including, but not limited to, PBX and key telephone systems).* (1) Entire systems, including their equipment, premises wiring, and protective apparatus (if any) directly connected to the public switched telephone network and services identified in §68.2(a)(2) on June 1, 1978, may remain connected to the public switched telephone network and services identified in §68.2(a)(2) for life without registration, unless subsequently modified, except for modifications allowed under §68.2(c)(3).

(2) New installations of equipments may be performed (including additions to existing systems) up to January 1, 1980, without registration of any equipments involved, provided that these equipments are of a type directly connected to the public switched telephone network or services identified in §68.2(a)(2) as of June 1, 1978. These

equipments may remain connected to the public switched telephone network or services identified in § 68.2(a)(2) for life without registration, unless subsequently modified, except for modifications allowed under § 68.2(c)(3).

(3) Modifications to systems and installations involving unregistered equipment:

(i) Use of other than fully-protected premises wiring is a modification under § 68.2. As an exception to the general requirement that no modification is permitted to unregistered equipment whose use is permitted under § 68.2, certain modifications are authorized herein.

(ii) Other than fully-protected premises wiring may be used if it is qualified in accordance with the procedures and requirements of § 68.215. Since there is no ''registrant'' of unregistered equipment, the training and authority required by § 68.215(c) will have to be received from the equipment's manufacturer.

(iii) Existing separate, identifiable and discrete protective apparatus may be removed, or replaced with apparatus of lesser protective function, provided that any premises wiring to which the public switched telephone network or service identified in § 68.2(a)(2) is thereby exposed conforms to § 68.2(c)(2) above. Minor modifications to existing unregistered equipments are authorized to facilitate installation or premises wiring, so long as they are performed under the responsible supervision and control of a person who complies with § 68.215(c). Since there is no ''registrant'' of unregistered equipment, the training and authority required by § 68.215(c) will have to be received from the manufacturer of the equipment so modified.

(d) *Grandfathered private branch exchange (or similar) systems for connection to private line type services (tie trunk type services, off-premises station lines, automatic identified outward dialing, and message registration):*

(1) PBX (or similar) systems, including their equipments, premises wiring, and protective apparatus (if any) directly connected to a private line type service on April 30, 1980 may remain connected to the private line type service for life without registration unless subsequently modified, except for modifications allowed under § 68.2(d)(3).

(2) New installations of equipments may be performed (including additions to existing systems) up to May 1, 1983 without registration of any equipments involved, provided that these equipments are of a type directly connected to a private line type service as of April 30, 1980. These equipments may remain connected to the private line type service for life without registration, unless subsequently modified, except for modifications allowed under § 68.2(d)(3).

(3) Modifications to systems and installations involving unregistered equipment:

(i) Use of other than fully-protected premises wiring is a modification under § 68.2. As an exception to the general requirement that no modification is permitted to unregistered equipment whose use is permitted under § 68.2, certain modifications are authorized herein.

(ii) Other than fully-protected premises wiring may be used if it is qualified in accordance with the procedures and requirements of § 68.215. Since there is no ''registrant'' of unregistered equipment, the training and authority required by § 68.215(c) will have to be received from the equipment's manufacturer.

(iii) Existing separate, identifiable and discrete protective apparatus may be removed, or replaced with apparatus of lesser protective function, provided that any premises wiring to which the private line type service is thereby exposed conforms to § 68.2(d)(ii) above. Minor modifications to existing unregistered equipments are authorized to facilitate installation or premises wiring, so long as they are performed under the responsible supervision and control of a person who complies with § 68.215(c). Since there is no ''registrant'' of unregistered equipment, the training and authority required by § 68.215(c) will have to be received from the manufacturer of the equipment so modified.

(4) PBX (or similar) systems connected with automatic identified outward dialing or message registration private line services of a type that complies with paragraphs (d)(1) and

(d)(2) of this section may remain connected for life without registration unless subsequently modified.

(e) *Grandfathered terminal equipment for connection to local area data channels.* All terminal equipment of a type directly connected to Local Area Data Channels or directly connected under special assembly tariff provisions to telephone company-supplied, non-loaded, metallic, greater-than-voiceband circuits for the purpose of providing limited distance data transmission as of February 10, 1986, may be connected thereafter up to August, 10, 1987, and may remain connected for life, without registration unless subsequently modified.

(f) *Grandfathered terminal equipment for connection to subrate and 1.544 Mbps digital services.* (1) Terminal equipment including premises wiring and protective apparatus (if any) directly connected to subrate or to 1.544 Mbps digital services on January 2, 1986, may remain connected and be reconnected to such digital services for life without registration, unless subsequently modified.

(2) New installations of terminal equipments, including premises wiring and protective apparatus (if any) may be installed (including additions to existing systems) up to June 30, 1987, without registration of any terminal equipment involved, provided that these terminal equipments are of a type directly connected to subrate or 1.544 Mbps digital services as of January 2, 1986. These terminal equipments may remain connected and be reconnected to such digital services for life without registration, unless subsequently modified.

(g) *Grandfathered test equipment.* (1) Test equipment directly connected to the telephone network on February 10, 1986, is considered to be grandfathered and may remain connected to the telephone network for life without registration unless subsequently modified.

(2) New installations of test equipment may be performed up to August 10, 1987 without registration, provided that the test equipment is of a type directly connected to the public switched network or services identified in § 68.2(a)(1), (2), (3), (5), (6), and (7) for life without registration unless subsequently modified.

(h) *Grandfathered terminal equipment or systems for connection to voiceband private line channels for 2-point and multipoint private line services that utilize loop start, ringdown, or inband signaling; or voiceband metallic channels.* (1) Terminal equipment or systems, including premises wiring and protective apparatus (if any), directly connected to voiceband private lines for 2-point or multipoint service on February 10, 1986, may remain connected to that private line type service for life without registration unless subsequently modified, except for modifications allowed under § 68.2(h)(3).

(2) New installations of equipments may be installed (including additions to existing systems) up to August 10, 1987 without registration of any equipments involved, provided that these equipments are of a type directly connected to voiceband private lines for 2-point or multipoint services. These equipments may remain connected to the private line-type service for life without registration, unless subsequently modified, except for modifications allowed under § 68.2(h)(3).

(3) Modification to systems and installations involving unregistered equipment:

(i) Use of other than fully-protected premises wiring is a modification under § 68.2. As an exception to the general requirements that no modification is permitted to unregistered equipment whose use is permitted under § 68.2, certain modifications are authorized herein.

(ii) Other than fully-protected premises wiring may be used if it is qualified in accordance with procedures and requirements of § 68.215. Since there is no ''registrant'' of unregistered equipment, the training and authority required by § 68.215(c) will have to be received from the equipment's manufacturer.

(iii) Existing separate, identifiable, and discrete protective apparatus may be removed or replaced with apparatus of lesser protective function, provided that any premises wiring to which the private line service is thereby exposed conforms to § 68.2(h)(3)(ii) of this section. Minor modifications to existing

unregistered equipments are authorized to facilitate installation of premises wiring, so long as they are performed under the responsible supervision and control of a person who complies with § 68.215(c). Since there is no ''registrant'' of unregistered equipment, the training and authority required by § 68.215(c) will have to be received from the manufacturer of the equipment so modified.

(i) *National defense and security.* Where the Secretary of Defense or authorized agent or the head of any other governmental department, agency, or administration (approved in writing by the Commission to act pursuant to this rule) or authorized representative, certifies in writing to the appropriate common carrier that compliance with the provisions of part 68 could result in the disclosure of communications equipment or security devices, locations, uses, personnel, or activity which would adversely affect the national defense and security, such equipment or security devices may be connected to the telephone company provided communications network without compliance with this part, provided that each written certification states that:

(1) The connection is required in the interest of national defense and security;

(2) The equipment or device to be connected either complies with the technical requirement of this part or will not cause harm to the nationwide telephone network or telephone company employees; and

(3) The installation is performed by well-trained, qualified employees under the responsible supervision and control of a person who meets the qualifications stated in § 68.215(c).

(j)(1) Terminal equipment, including its premises wiring directly connected to PSDS (Type I, II or III) on or before November 13, 1996, may remain for service life without registration, unless subsequently modified. Service life means the life of the equipment until retired from service. Modification means changes to the equipment that affect compliance with part 68 rules.

(2) New installation of terminal equipment, including its premises wiring, may occur until May 13, 1998, without registration of any terminal equipment involved, provided that the terminal equipment is of a type directly connected to PSDS (Type I, II or III) as of November 13, 1996. This terminal equipment may remain connected and be reconnected to PSDS (Type I, II or III) for service life without registration unless subsequently modified.

(3) Terminal equipment including premises wiring and protective apparatus (if any) directly connected to the network on April 20, 1998, may remain connected and be reconnected for life without registration, unless subsequently modified. New installations of terminal equipment, including premises wiring and protective apparatus (if any) may be installed (including additions to existing systems) up to May 19, 1999, without registration of any terminal equipment involved, provided that the terminal equipment is of a type directly connected to the network as of April 20, 1998. This terminal equipment may remain connected and be reconnected to the network for life without registration, unless subsequently modified.

(k)(1) Terminal equipment, including premises wiring directly connected to ISDN BRA or PRA on November 13, 1996, may remain connected to ISDN BRA or PRA for service life without registration, unless subsequently modified.

(2) New installation of terminal equipment, including premises wiring, may occur until May 13, 1998, without registration of any terminal equipment involved, provided that the terminal equipment is of a type directly connected to ISDN BRA or PRA as of November 13, 1996. This terminal equipment may remain connected and be reconnected to ISDN BRA or PRA for service life without registration unless subsequently modified.

(l) *Grandfathered centeral office implemented payphone equipment.* (1) Terminal equipment, including its premises wiring, that is directly connected to a central-office-implemented telephone line on or before October 8, 1997, may remain for service life without registration, unless subsequently modified. Service life means that life of the equipment until retired from service. Modification means changes to the

equipment that affect the part 68-related characteristics of that equipment at the network interface.

(2) New installation of terminal equipment, including its premises wiring, may occur until April 8, 1999, without registration of any central-office-implemented telephone line equipment involved, provided that the terminal equipment is of a type directly connected to a central-office-implemented telephone line as of October 8, 1997. This terminal equipment may remain connected and be reconnected to a central-office-implemented telephone.

Governmental departments, agencies, or administrations that wish to qualify for interconnection of equipment or security devices pursuant to this section shall file a request with the Secretary of this Commission stating the reasons why the exemption is requested. A list of these departments, agencies, or administrations that have filed requests shall be published in the FEDERAL REGISTER. The Commission may take action with respect to those requests 30 days after publication. The Commission action shall be published in the FEDERAL REGISTER. However, the Commission may grant, on less than the normal notice period or without notice, special temporary authority, not to exceed 90 days, for governmental departments, agencies, or administrations that wish to qualify for interconnection of equipment or security devices pursuant to this section. Requests for such authority shall state the particular fact and circumstances why authority should be granted on less than the normal notice period or without notice. In such cases, the Commission shall endeavor to publish its disposition as promptly as possible in the FEDERAL REGISTER.

(Secs. 4, 5, 303, 48 Stat. 1066, 1068, 1082, as amended (47 U.S.C. 154, 155, 303) (47 U.S.C. 151, 154(i), 154(j), 201–205, 218, 220, 313, 403, 412, and 5 U.S.C. 553)

[40 FR 20841, Mar. 31, 1980, as amended at 49 FR 21734, May 23, 1984; 49 FR 48719, Dec. 14, 1984; 50 FR 48208, Nov. 22, 1985; 51 FR 937, Jan. 9, 1986; 51 FR 16689, May 6, 1986; 61 FR 42387, Aug. 15, 1996; 61 FR 52324, Oct. 7, 1996; 62 FR 24587, May 6, 1997; 62 FR 47371, Sept. 9, 1997; 62 FR 54790, Oct. 22, 1997; 62 FR 61654, Nov. 19, 1997; 63 FR 25170, May 7, 1998]

## §68.3 Definitions.

As used in this part:

*Auxiliary leads:* Terminal equipment leads at the interface, other than telephone connections and leads otherwise defined in these Rules, which leads are to be connected either to common equipment or to circuits extending to central office equipment.

*Capture Level:* Equipment with AGC (automatic Gain Control) signal power limiting has virtually no output signal for input levels below a certain value. At some input signal power, the output level will become significant (usually corresponding to the expected output level) for the service application. The input level at which this occurs is defined as the ''capture level.''

*Central-office implemented telephone:* A telephone executing coin acceptance requiring coin service signaling from the central office.

*Channel equipment:* Equipment in the private line channel of the telephone network that furnishes telephone tip and ring, telphone tip 1 and ring 1, and other auxiliary or supervisory signaling leads for connection at the private line channel interface (where tip 1 and ring 1 is the receive pair for 4-wire telephone connections).

*Coin-implemented telephone:* A telephone containing all circuitry required to execute coin acceptance and related functions within the instrument itself and not requiring coin service signaling from the central office.

*Coin service:* Central office implemented coin telephone service.

*Companion terminal equipment:* Companion terminal equipment represents the terminal equipment that would be connected at the far end of a network facility and provides the range of operating conditions that the terminal equipment which is being registered would normally encounter.

*Continuity leads:* Terminal equipment continuity leads at the network interface designated CY1 and CY2 which are connected to a strap in a series jack configuration for the purpose of determining whether the plug associated with the terminal equipment is connected to the interface jack.

*Demarcation point:* The point of demarcation and/or interconnection between telephone company communications facilities and terminal equipment, protective apparatus or wiring at a subscriber's premises. Carrier-installed facilities at, or constituting, the demarcation point shall consist of wire or a jack conforming to subpart F of part 68 of the Commission's rules. ''Premises'' as used herein generally means a dwelling unit, other building or a legal unit of real property such as a lot on which a dwelling unit is located, as determined by the telephone company's reasonable and nondiscriminatory standard operating practices. The ''minimum point of entry'' as used herein shall be either the closest practicable point to where the wiring crosses a property line or the closest practicable point to where the wiring enters a multiunit building or buildings. The telephone company's reasonable and nondiscriminatory standard operating practices shall determine which shall apply. The telephone company is not precluded from establishing reasonable classifications of multiunit premises for purposes of determining which shall apply. Multiunit premises include, but are not limited to, residential, commercial, shopping center and campus situations.

(a) *Single unit installations.* For single unit installations existing as of August 13, 1990, and installations installed after that date the demarcation point shall be a point within 30 cm (12 in) of the protector or, where there is no protector, within 30 cm (12 in) of where the telephone wire enters the customer's premises, or as close thereto as practicable.

(b) *Multiunit installations.* (1) In multiunit premises existing as of August 13, 1990, the demarcation point shall be determined in accordance with the local carrier's reasonable and non-discriminatory standard operating practices. Provided, however, that where there are multiple demarcation points within the multiunit premises, a demarcation point for a customer shall not be further inside the customer's premises than a point twelve inches from where the wiring enters the customer's premises, or as close thereto as practicable.

(2) In multiunit premises in which wiring is installed after August 13, 1990, including major additions or rearrangements of wiring existing prior to that date, the telephone company may establish a reasonable and nondiscriminatory practice of placing the demarcation point at the minimum point of entry. If the telephone company does not elect to establish a practice of placing the demarcation point at the minimum point of entry, the multiunit premises owner shall determine the location of the demarcation point or points. The multiunit premises owner shall determine whether there shall be a single demarcation point location for all customers or separate such locations for each customer. Provided, however, that where there are multiple demarcation points within the multiunit premises, a demarcation point for a customer shall not be further inside the customer's premises than a point 30 cm (12 in) from where the wiring enters the customer's premises, or as close thereto as practicable.

(3) In multiunit premises with more than one customer, the premises owner may adopt a policy restricting a customer's access to wiring on the premises to only that wiring located in the customer's individual unit that serves only that particular customer.

*Digital milliwatt:* A digital signal that is the coded representation of a 0 dBm, 1000 Hertz sine wave.

*Direct connection:* Connection of terminal equipment to the telephone network by means other than acoustic and/or inductive coupling.

*Dual Tone Multi Frequency (DTMF)* network control signalling is a method of signalling using the voice transmission path. The method employs sixteen (16) distinct signals each composed of two (2) voiceband frequencies, one from each of two (2) geometrically spaced groups designated ''low group'' and ''high group.'' The selected spacing assures that no two frequencies of any group combination are harmonically related.

*E&M leads:* Terminal equipment leads at the interface, other than telephone connections and auxiliary leads, which are to be connected to channel equipment solely for the purpose of transferring supervisory signals conventionally

known as Types I and II E&M and schematically shown in Figures 68.3(e)(i) and 68.3(a)(ii).

*Encoded analog content:* The analog signal contained in coded form within a digital signal.

*Equivalent power:* The power of the analog signal at the output of a zero level decoder, obtained when a digital signal is the input to the decoder.

*Essential Telephones:* Means only coin-operated telephones, telephones provided for emergency use, and other telephones frequently needed for use by persons using such hearing aids.

*Harm:* Electrical hazards to telephone company personnel, damage to telephone company equipment, malfunction of telephone company billing equipment, and degradation of service to persons other than the user of the subject terminal equipment, his calling or called party.

*Hearing aid compatible:* Except as used at §§68.4(a)(3) and 68.414, the terms hearing aid compatible or hearing aid compatibility are used as defined in §68.316, unless it is specifically stated that hearing aid compatibility volume control, as defined in §68.317, is intended or is included in the definition.

*Inband signaling private line interface:* The point of connection between an inband signaling voiceband private line and terminal equipment or systems where the signaling frequencies are within the voiceband. All tip and ring leads shall be treated as telephone connections for the purposes of fulfilling registration conditions.

*Instrument-implemented telephone:* A telephone containing all circuitry required to execute coin acceptance and related functions within the instrument itself and not requiring coin service signaling from the central office.

*ISDN Basic Rate Interface:* A two-wire interface between the terminal equipment and ISDN BRA. The tip and ring leads shall be treated as telephone connections for the purpose of fulfilling registration conditions.

*ISDN Primary Rate Interface:* A four-wire interface between the terminal equipment and 1.544 Mbps ISDN PRA. The tip, ring, tip-1, and ring-1 leads shall be treated as telephone connections for the purpose of fulfilling registration conditions.

*Local area data channel (LADC) leads:* Terminal equipment leads at the interface used to transmit and/or receive signals which may require greater-than-voiceband frequency spectrum over private line metallic channels designated Local Area Data Channels (LADC). These leads should be treated as ''telephone connections'' as defined in this section or as tip and ring connections where the term ''telephone connection'' is not used.

*Local area data channel simulator circuit:* A circuit for connection in lieu of a Local Area Data Channel to provide the appropriate impedance for signal power tests. The schematic of Figure 68.3(i) is illustrative of the type of circuit that will be required over the given frequency ranges. When used, the simulator shall be operated over the appropriate range of loop resistance for the equipment under test, under all voltages and polarities that the terminal under test and a connected companion unit are capable of providing.

*Longitudinal voltage:* One half of the vector sum of the potential difference between the tip connection and earth ground, and the ring connection and earth ground for the tip, ring pair of 2-wire and 4-wire connections; and, additionally for 4-wire telephone connections, one half of the vector sum of the potential difference between the tip 1 connection and earth ground and the ring 1 connection and earth ground for the tip 1, ring 1 pair (where tip 1 and ring 1 are the receive pair).

*Loop simulator circuit.* A circuit that simulates the network side of a 2-wire or 4-wire telephone connection during testing. The required circuit schematics are shown in Figure 68.3(a) for 2-wire loop or ground start circuits, Figure 68.3(b) for 2-wire reverse battery circuits, Figure 68.3(c) for 4-wire loop or ground start circuits, Figure 68.3(d) for 4-wire reverse battery circuits, and Figure 68.3(h) for voiceband metallic channels. Figure 68.3(g) is an alternative termination for use in the 2-wire loop simulator circuits. Other implementations may be used provided that the same dc voltage and current characteristics and ac impedance characteristics will be presented to the equipment under test as are presented in the illustrative schematic diagrams. When

used, the simulator shall be operated over the entire range of loop resistance as indicated in the figures, and with the indicated polarities and voltage limits. Whenever loop current is changed, sufficient time shall be allocated for the current to reach a steady-state condition before continuing testing.

*Make-busy leads:* Terminal equipment leads at the network interface designated MB and MB1. The MB lead is connected by the terminal equipment to the MB1 lead when the corresponding telephone line is to be placed in an unavailable or artificially busy condition.

*Metallic voltage:* The potential difference between the tip and ring connections for the tip, ring pair of 2-wire and 4-wire connections and additionally for 4-wire telephone connections, between the tip 1 and ring 1 connections for the tip 1, ring 1 pair (where tip 1 and ring 1 are the receive pair).

*Multi-port equipment:* Equipment that has more than one telephone connection with provisions internal to the equipment for establishing transmission paths among two or more telephone connections.

*Network port:* An equipment port of registered protective circuitry which port faces the telephone network.

*Non-system premises wiring:* Wiring that is used with up to four-line business and residence services, located at the subscriber's premises.

(a) *Fully protected non-system premises wiring.* Non-system premises wiring which is electrically behind registered (or grandfathered) equipment or protective circuitry which assures that electrical contact between the wiring and commercial power wiring or earth ground will not result in hazardous voltages at the telephone network interface.

(b) *Unprotected non-system premises wiring:* All other non-system premises wiring.

*Off-premises line simulator circuit:* A load impedance for connection, in lieu of an off-premises station line, to PBX (or similar) telephone system loop start circuits (Figure 68.3(f)) during testing. The schematic diagram of Figure 68.3(f) is illustrative of the type of circuit which will be required; alternative implementations may be used provided that the same dc voltage and current characteristics and ac impedance characteristics will be presented to the equipment under test as are presented in the illustrative schematic diagram. When used, the simulator shall be operated over the entire range of loop resistances as indicated in Figure 68.3(f), and with the indicated polarities. Whenever loop current is changed, sufficient time shall be allocated for the current to reach a steady-state condition before continuing testing.

*Off-premises station interface:* The point of connection between PBX telephone systems (or similar systems) and telephone company private line communication facilities used to access registered station equipment located off the premises. Equipment leads at this interface are limited to telephone tip and ring leads (designated T(OPS) and R(OPS)) where the PBX employs loop-start signaling at the interface. Unless otherwise noted, all T(OPS) and R(OPS) leads shall be treated as telephone connections for purposes of fulfilling registration conditions.

*One-port equipment:* Equipment which has either exactly one telephone connection, or a multiplicity of telephone connections arranged so that no transmission among such telephone connections, within the equipment, is intended.

*Overload Point:* (1) For signal power limiting circuits incorporating automatic gain control method, the ''overload point'' is the value of the input signal that is 15 dB greater than the capture level.

(2) For signal power limiting circuits incorporating peak limiting method, the ''overload point'' is defined as the input level at which the equipment's through gain decreases by 0.4 dB from its nominal constant gain.

*Power connections:* The connections between commercial power and any transformer, power supply rectifier, converter or other circuitry associated with registered terminal equipment or registered protective circuitry. The following are not power connections.

(a) Connections between registered terminal equipment or registered protective circuitry and sources of non-

hazardous voltages (see §68.306(b)(4) for a definition of non-hazardous voltages).

(b) Conductors which distribute any power within registered terminal equipment or within registered protective circuitry.

(c) Green wire ground (the grounded conductor of a commercial power circuit which is UL-identified by a continuous green color).

*Private line channel:* Telephone company dedicated facilities and channel equipment used in furnishing private line service from the telephone network for the exclusive use of a particular party or parties.

*Private Radio Services:* Means private land mobile radio services and other communications services characterized by the Commission in its rules as private radio services.

*PSDS Type II Analog Mode Loop Simulator Circuit:* A circuit simulating the network side of the two-wire telephone connection that is used for testing terminal equipment to be connected to the PSDS Type II loops. Figure 68.3(m) shows the type of circuit required. Other test circuit configurations may be used provided they operate at the same DC voltage and current characteristics and AC impedance characteristics presented in the illustrated circuit. When utilized, the simulator should be operated over the entire range of loop resistances, and with the indicated voltage limits and polarities. Whenever the loop current is changed, sufficient time shall be allowed for the current to reach a steady-state condition before continuing testing.

*Public Mobile Services:* Means air-to-ground radiotelephone services, cellular radio telecommunications services, offshore radio, rural radio service, public land mobile telephone service, and other common carrier radio communications services covered by part 22 of title 47 of the Code of Federal Regulations.

*Public Switched Digital Service Type I (PSDS Type I):* This service functions only in a digital mode. It employs a transmission rate of 56 Kbps on both the transmit and receive pairs to provide a four-wire full duplex digital channel. Signaling is accomplished using bipolar patterns which include bipolar violations.

*Public Switched Digital Service Type II (PSDS Type II):* This service functions in two modes, analog and digital. Analog signaling procedures are used to perform supervisory and address signaling over the network. After an end-to-end connection is established, the Switched Circuit Data Service Unit (SCDSU) is switched to the digital mode. The time compression multiplexing (TCM) transmission operated at a digital transmission speed of 144 Kbps to provide full-duplex 56 Kbps on the two-wire access line.

*Public Switched Digital Service Type III (PSDS Type III):* This service functions only in a digital mode. It uses a time compression multiplexing (TCM) rate of 160 Kbps, over one pair, to provide two full-duplex channels—an 8 Kbps signaling channel for supervisory and address signaling, and a 64 Kbps user data channel on a two-wire access line.

*Registered protective circuitry:* Separate, identifiable and discrete electrical circuitry designed to protect the telephone network from harm, which is registered in accordance with the rules and regulations in Subpart C of this part.

*Registered terminal equipment:* Terminal equipment which is registered in accordance with the rules and regulations in Subpart C of this part.

*Ringdown private line interface:* The point of connection between ringdown voiceband private line service and terminal equipment or systems which provide ringing (20 or 30 Hz) in either direction for alerting only. All tip and ring leads shall be treated as telephone connections for the purposes of fulfilling registration conditions. On 2-wire circuits the ringing voltage is applied to the ring conductor with the tip conductor grounded. On 4-wire circuits the ringing voltage is simplexed on the tip and ring conductors with ground simplexed on the tip (1) and ring (1) conductors.

*Secure Telephones:* Means telephones that are approved by the United States Government for the transmission of classified or sensitive voice communications.

*Specialty adapters:* Adapters that contain passive components such as resistive pads or bias resistors typically used for connecting data equipment

having fixed-loss loop or programmed data jack network connections to key systems or PBXs.

*Subrate digital service:* A digital service providing for the full-time simultaneous two-way transmission of digital signals at synchronous speeds of 2.4, 4.8, 9.6 or 56 kbps.

*Switched Circuit Data Service Unit (SCDSU):* A CPE device, with PSDS functionality, located between the Network Interface and the data terminal equipment. (It also is sometimes referred to as Network Channel Terminating Equipment).

*System premises wiring:* Wiring which connects separately-housed equipment entities or system components to one another, or wiring which connects an equipment entity or system component with the telephone network interface, located at the customer's premises and not within an equipment housing.

(a) *Fully protected systems premises wiring.* Premises wiring which is either:

(1) No greater than 15 meters (50 feet) in length (measured linearly between the points where it leaves equipment or connector housings) and registered as a component of and supplied to the user with the registered terminal equipment or protective circuitry with which it is to be used. Such wiring shall either be pre-connected to the equipment or circuitry, or may be so connected by the user (or others) if it is demonstrated in the registration application that such connection by the untrained will not result in harm, using relatively fail-safe means.

(2) A cord which complies with the previous subsection either as an integral length or in combination with no more than one connectorized extension cord. If used, the extension cord must comply with the requirements of § 68.200(h) of these Rules.

(3) Wiring located in an equipment room with restricted access, provided that this wiring remains exposed for inspection and is not concealed or embedded in the building's structure, and that it conforms to § 68.215(d).

(4) Electrically behind registered (or grandfathered) equipment, system components or protective circuitry which assure that electrical contact between the wiring and commercial power wiring or earth ground will not result in hazardous voltages or excessive longitudinal imbalance at the telephone network interface.

(b) *Protected system premises wiring requiring acceptance testing for imbalance.* Premises wiring which is electrically behind registered (or grandfathered) equipment, system components or circuitry which assure that electrical contact between the wiring and commercial power wiring will not result in hazardous voltages at the telephone network interface.

(c) *Unprotected system premises wiring.* All other premises wiring.

*Telephone connection:* Connection to telephone network tip and ring leads for 2-wire and 4-wire connections and, additionally, for 4-wire telephone connections, tip 1 and ring 1 leads and all connections derived from these leads. The term ''derived'' as used here means that the connections are not separated from telephone tip and ring or from telephone tip 1 and ring 1 by a sufficiently protective barrier. Part 68 Rules that apply specifically to telephone network tip and ring pairs shall also apply to telephone network tip 1 and ring 1 pairs unless otherwise specified. In 4-wire connections, leads designated tip and ring at the interface are for transmitting voice frequencies toward the network and leads designated tip 1 and ring 1 at the interface are for receiving voice frequencies from the network.

*Telephone network:* The public switched network and those private lines which are defined in § 68.2(a) (2) and (3).

*Terminal port:* An equipment port of registered protective circuitry which port faces remotely-located terminal equipment.

*Test Equipment:* Equipment connected at the customer's premises that is used on the customer's side of the network interfaces to measure characteristics of the telephone network, or to detect and isolate a communications fault between a terminal equipment entity and the telephone network. Registration is required for test equipment capable of functioning as portable traffic recorded or equipment capable of transmitting or receiving test tones; except registration is not required for devices used by

telephone companies solely for network installation and maintenance activities such as hand-held data terminals, linesmen's handsets, and subscriber line diagnostic devices.

*Tie trunk transmission interfaces.*

(a) 2-Wire: A 2-wire transmission interface with a path that is essentially lossless (except for 2dB switched pad operation, or equivalent) between the interface and the 2-wire or 4-wire, transmission reference point of the terminal equipment.

(b) 4-Wire lossless: A 4-wire transmission interface with a path that is essentially lossless (except for 2dB switched pad operation, or equivalent) between the interface and the 2-wire or 4-wire transmission reference point of the terminal equipment; and

(c) Direct Digital Interface: An interface between a digital PBX and a digital transmission facility.

(d) Digital Tandem 4-Wire Interface: A 4-wire digital interface between digital terminal equipment and a digital transmission facility operating at 1.544 Mbps or subrate connecting terminal equipment that provide tandem connections.

(e) Digital Satellite 4-wire Interface: A 4-wire digital interface between digital terminal equipment and a digital transmission facility operating at 1.544 Mbps or subrate connecting terminal equipment that does not provide tandem connections to other digital terminal equipment.

*Voiceband:* The voiceband for analog interfaces is the frequency band from 200 Hz to 3995 Hz.

*Voiceband metallic private line channel interface:* The point of connection between a voiceband metallic private line channel and terminal equipment or systems where the network does not provide any signaling or transmission enhancement. Registered terminal equipment or systems may use convenient signaling methods so long as the signals are provided in such a manner that they cannot interfere with adjacent network channels. All tip and ring leads shall be treated as telephone connections for the purpose of fulfilling registration conditions.

*Zero Level Decoder*: The zero level decoder shall comply with the u=255 PCM encoding law as specified in ITU–TSS (CCITT) Rec. G.711 for voiceband encoding and decoding. See also Fig. 68.3(j).

*1.544 Mbps digital CO 4-wire interface:* A 4-wire digital interface between digital terminal equipment and a digital transmission facility operating at 1.544 Mbps connecting to a serving central office.

*1.544 Mbps digital service:* A full-time dedicated private line circuit used for the transmission of digital signals at a speed of 1.544 Mbps.

## LOOP SIMULATOR FOR LOOP START AND GROUND START CIRCUITS

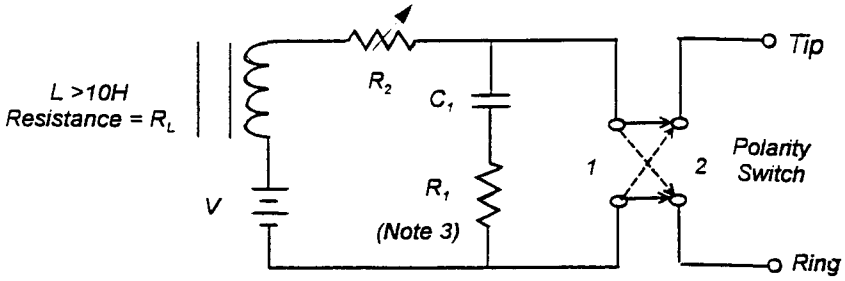


$C_1$ = 500 mfd -10% + 50% $R_1$ = 600 ohms ± 1%

| Condition | V - Volts | Switch Position for Test | R2 + RL |
|---|---|---|---|
| 1 | Min 42.5<br>Max 56.5 | Both | Continuously variable over 400 to 1740 ohms |
| 2 | 105 | 2 | 2000 ohms |

1. Means shall be used to generate, at the point of tip and ring connections to the terminal equipment or protective circuitry, the paramenters of dc line current and ac impedance which are generated by the illustrative circuit depicted above (as appropriate for the equipment under test).
2. In the Transverse Balance Limitations, Section 68.310, the use of the "dc portion of the loop simulator circuit" is specified. In such case components of $R_1$ and $C_1$ should be removed.
3. Tests for compliance may be made with either $R_1$ = 600 ohms or $R_1$ replaced by the alternative configuration shown in Figure 68.3(g).

Figure 68.3(a)

## Loop Simulator for Reverse Battery Circuits

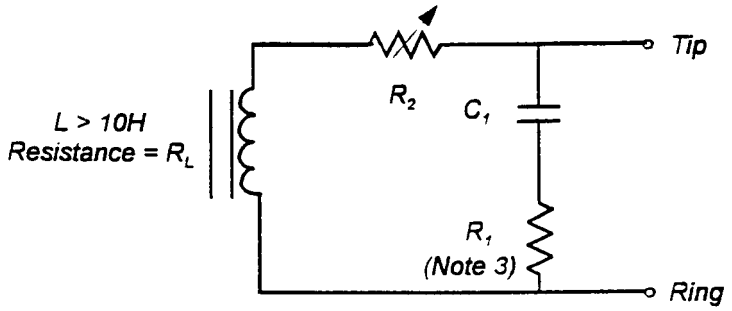


$C_1$ = 500 mFd -10% + 50%

$R_1$ = 600 ohms ± 1%

Notes for Figure 68.3(a) apply also to this drawing

| $R_2$ + $R_L$ |
| --- |
| Continuously variable over 400 to 2450 ohms |

Figure 68.3(b)

LOOP SIMULATOR CIRCUIT FOR 4-WIRE
LOOP START AND GROUND START

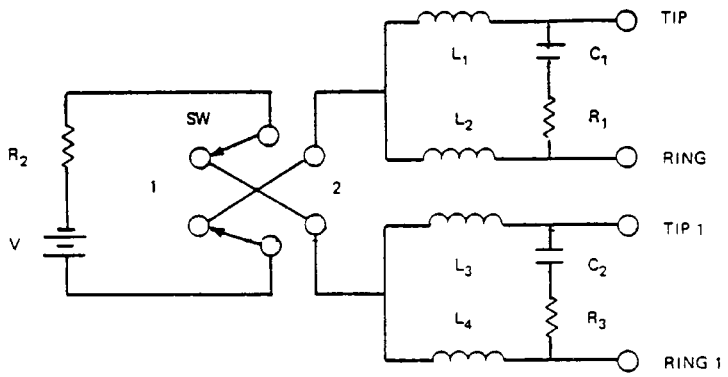


SW = POLARITY SWITCH

$L_1 = L_2 = L_3 = L_4 \geq 5H$ (RESISTANCE = $R_{L1}$, $R_{L2}$, $R_{L3}$, $R_{L4}$)
$R_1 = R_3 = 600$ OHMS, ± 1%
$C_1 = C_2 = 500\mu FD$, −10%, + 50%

| CONDITION | V VOLTS | | SWITCH POSITION FOR TEST | $R_2 + R_L$ * |
|---|---|---|---|---|
| 1 | MIN 42.5 | MAX 56.5 | BOTH | CONTINUOUSLY VARIABLE OVER 400 TO 1740 Ω |
| 2 | 105 | | 2 | 2000Ω |

$$R_L = \frac{R_{L1}\ R_{L2}}{R_{L1}+R_{L2}} + \frac{R_{L3}\ R_{L4}}{R_{L3}+R_{L4}}$$

FIGURE 68.3(C)

LOOP SIMULATOR CIRCUIT FOR 4-WIRE
REVERSE BATTERY CIRCUITS

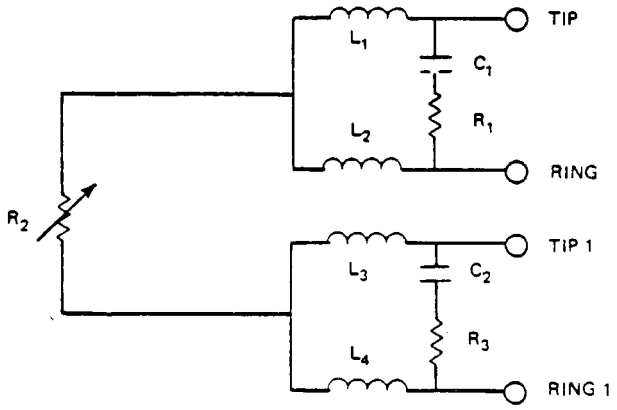


$L_1 = L_2 = L_3 = L_4 \geqslant 5H$ (RESISTANCE = $R_{L1}$, $R_{L2}$, $R_{L3}$, $R_{L4}$)
$R_1 = R_3 = 600$ OHMS, ± 1%
$C_1 = C_2 = 500\mu FD$, -10%, + 50%

| $R_2 + R_L$ |
| --- |
| CONTINUOUSLY VARIABLE OVER 400 TO 2450Ω |

$$R_L = \frac{R_{L1} R_{L2}}{R_{L1} + R_{L2}} + \frac{R_{L3} R_{L4}}{R_{L3} + R_{L4}}$$

FIGURE 68.3(D)

REGISTERED TERMINAL EQUIPMENT
ON "A" SIDE OF INTERFACE

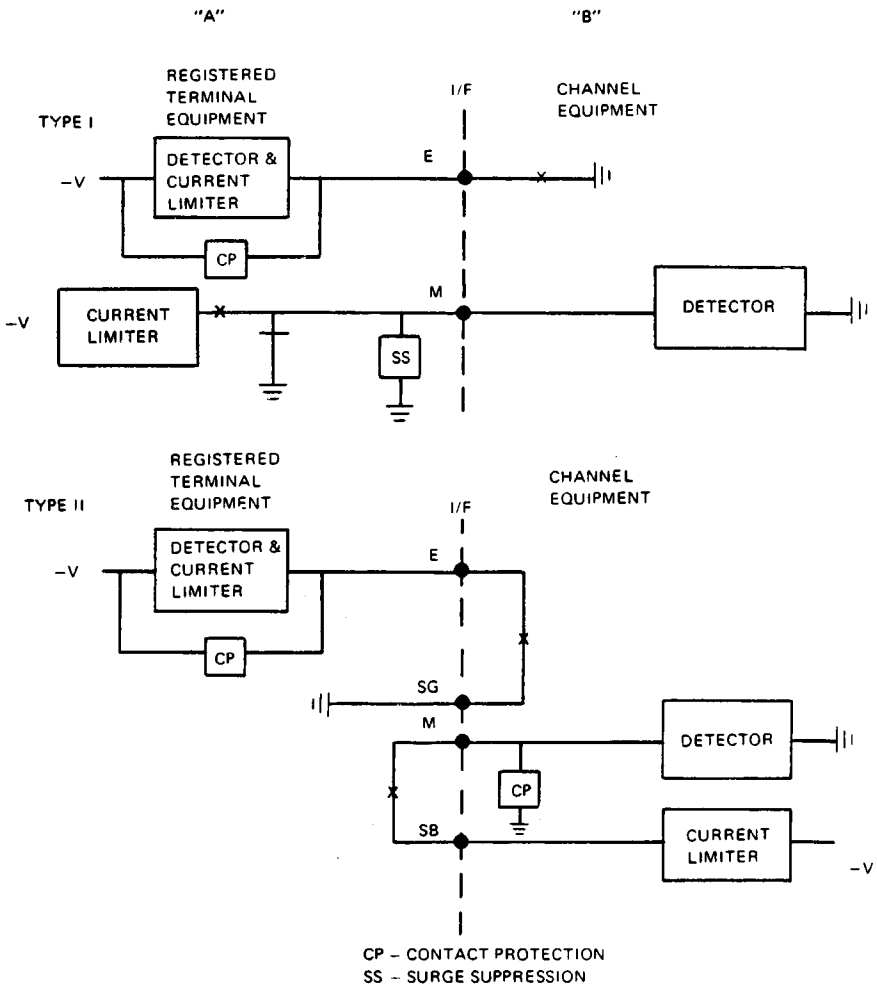


**FIGURE 68.3 (e) (i)**
**E&M TYPES I & II SIGNALING**

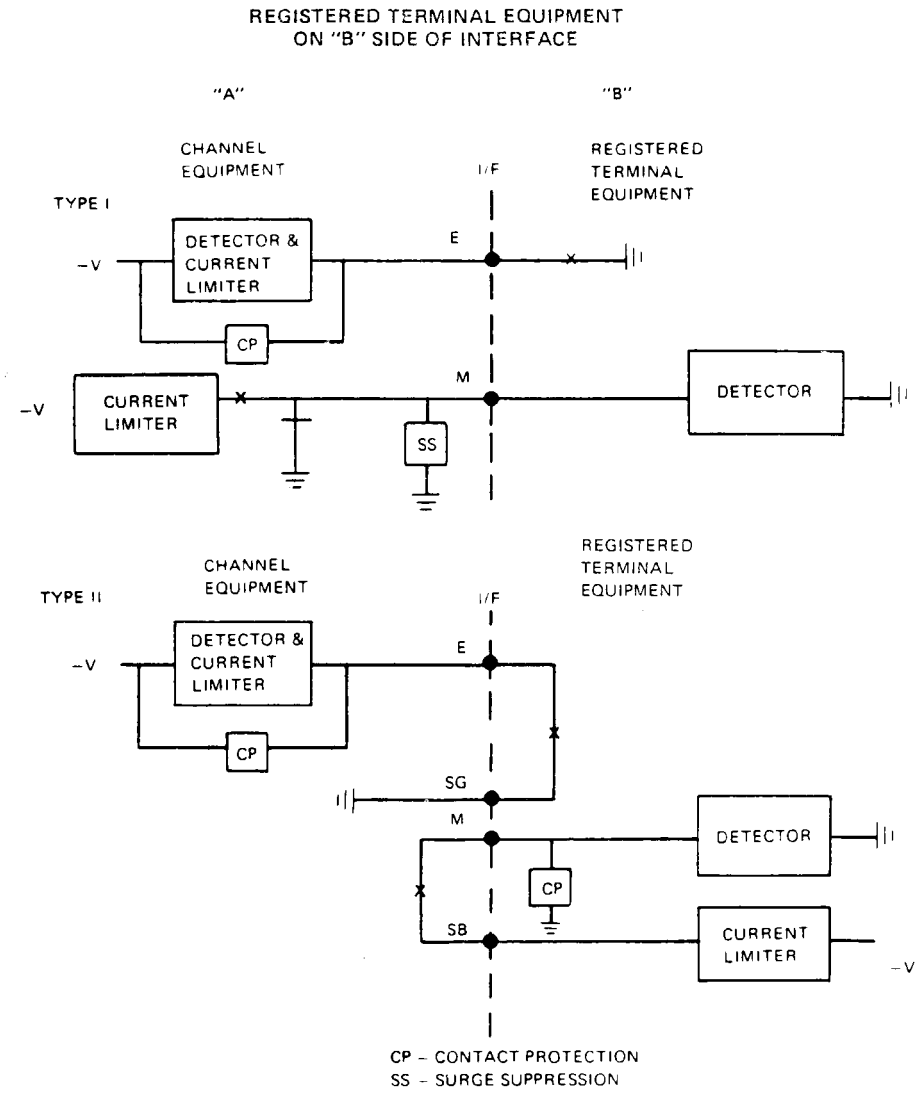


**FIGURE 68.3 (e) (i)**
**E&M TYPES I & II SIGNALING**

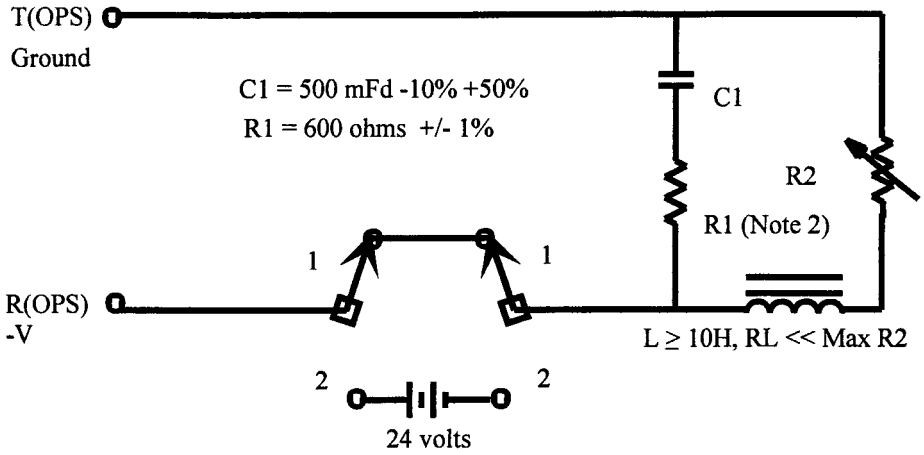


| | | R2 + RL continuously variable over the following range | | |
|---|---|---|---|---|
| Condition | Switch Position for Test | Class A | Class B | Class C |
| 1 | 1 | up to 200 ohms | up to 800 ohms | up to 1800 ohms |
| 2 | 2 | N.A. | 200 to 2300 ohms | 900 to 3300 ohms |

The minimum current for all resistance ranges shall be 16 ma.

Notes: (1) Means shall be used to generate , at the point of tip (T OPS) and ring (R OPS) connections to the PBX, the range of resistance and impedance which are employed by the illustrative circuit depicted above.
(2) In the transverse balance limitations , Section 68.310, the use of the dc portion of the loop simulator is specified. In such cases R1 and C1 shall be removed.
(3) Tests for compliance may be made with either R1 = 600 ohms or R1 replaced by the alternative termination specified in Figure 68.3(g).

**Off Premises Loop Simulator - Figure 68.3(f)**

# ALTERNATIVE TERMINATION

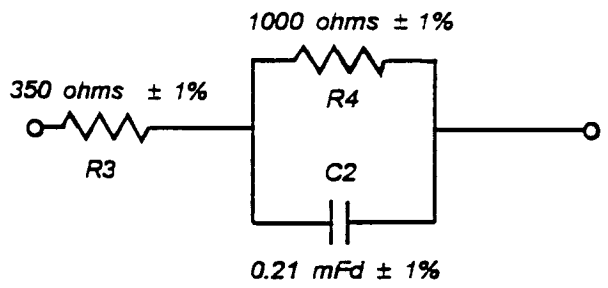


*Note: When this alternative termination is used during signal power compliance testing, it replaces R1 (600 ohms) in the loop simulator circuit.*

*Figure 68.3(g)*

*LOOP SIMULATOR CIRCUIT*

*VOICEBAND METALLIC CHANNELS*

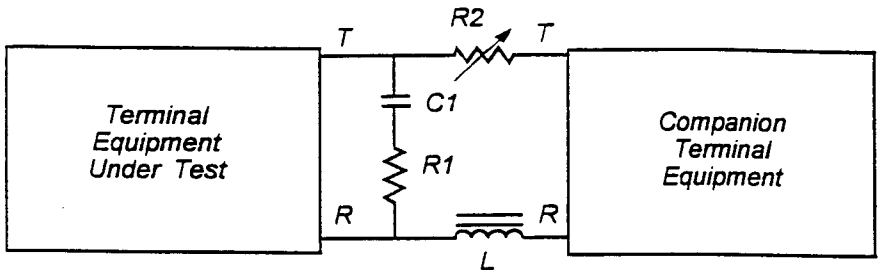


*C1 = 500mFd -10%, +5%*

*R1 = 600 ohms ± 1%*

*L = 10H, Resistance = RL*

*R2 + RL are continuously variable from RL to RX;*

*Where RX = Signaling range of Equipment Under Test, and*

*RL << RX*

*Notes: For Transverse Balance Measurements, Section 68.310, the DC portion of the loop simulator should be provided by removing R1 and C1. Companion Terminal Equipment grounds (including power supplies) must be isolated from Transverse Balance circuit grounds.*

*Figure 68.3(h)*

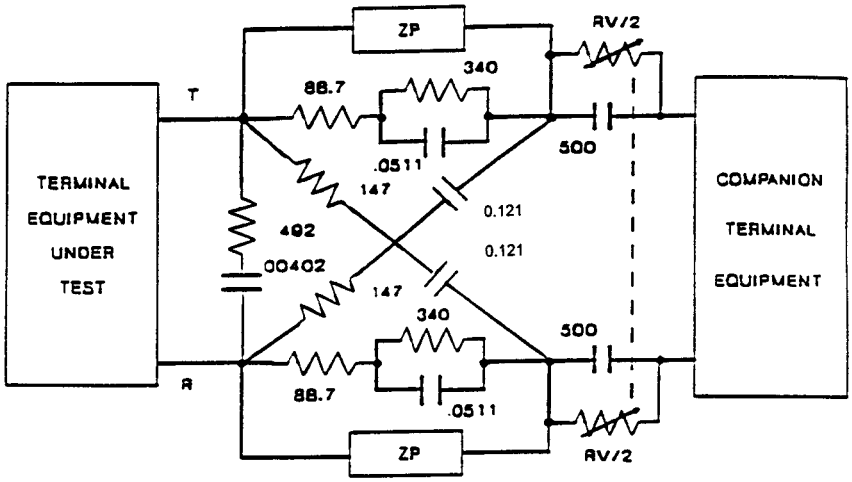


Resistances (Ohms), Capacitances (uF), Tolerances ± 2%.
RV + RP = 50 thru 3000 Ohms.
ZP is the magnitude of the lowpass filter impedance which is ( 25 Ohm dc; ) 3 Kohm from 10 Hz to 6 Khz.
RP/2 = dc resistance of lowpass filter, ZP in parallel with 428.7 Ohm.

Figure 68.3(i) LADC Impedance Simulator for Metallic Voltage Tests

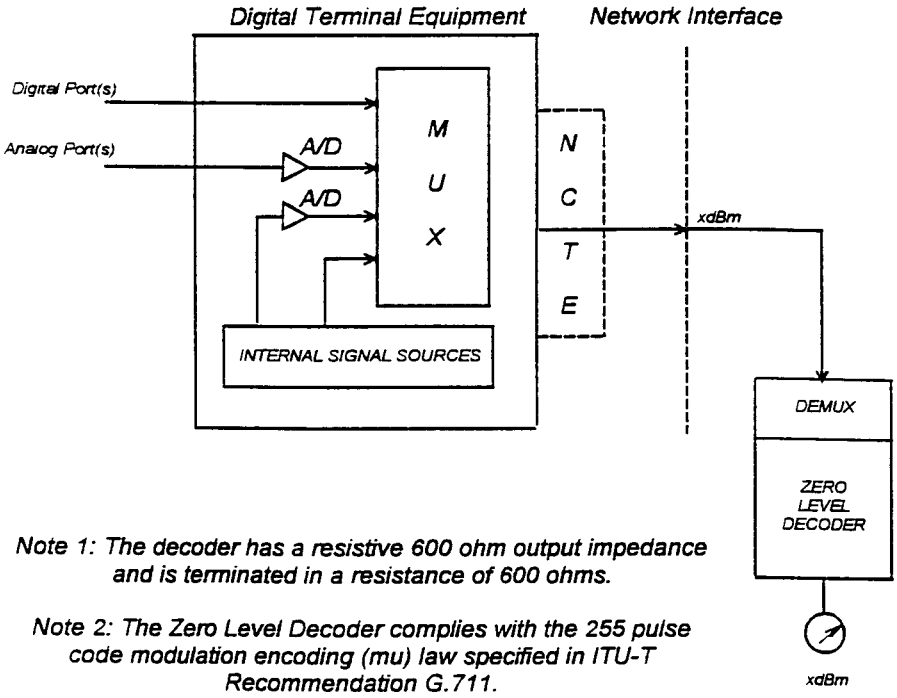


*Note 1: The decoder has a resistive 600 ohm output impedance and is terminated in a resistance of 600 ohms.*

*Note 2: The Zero Level Decoder complies with the 255 pulse code modulation encoding (mu) law specified in ITU-T Recommendation G.711.*

*ZERO-LEVEL DECODER TEST CONFIGURATION FOR SUBRATE AND 1.544 MBPS DIGITAL CHANNELS*

***Figure 68.3 (j)***

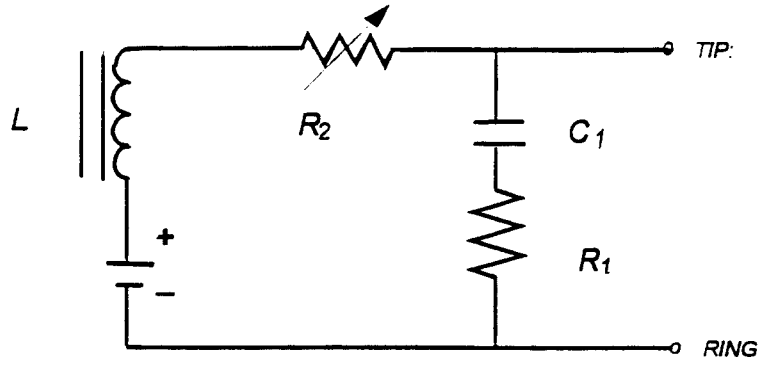


$L \geq 10H$ (Resistance = $R_L$)

$R_1$ = 600 ohms ± 1%

$C_1$ = 500mF, -10%, +50%

TEST CONDITIONS FOR ANALOG MODE

| V (volts) Min | Max | R2 + RL (ohms) continuously variable |
|---|---|---|
| 36 | 46 | 610 to 1510 |

# SIMULATOR CIRCUIT FOR PSDS IN ANALOG MODE
# Fig 68.3(k)

[45 FR 20841, Mar. 31, 1980, as amended at 46 FR 40192, Aug. 7, 1981; 49 FR 21734, May 23, 1984; 49 FR 48720, Dec. 14, 1984; 50 FR 48208, Nov. 22, 1985; 51 FR 937, Jan. 9, 1986; 54 FR 21430, May 18, 1989; 55 FR 28629, July 12, 1990; 58 FR 44907, Aug. 25, 1993; 61 FR 42186, Aug. 14, 1996; 61 FR 42387, Aug. 15, 1996; 61 FR 52324, Oct. 7, 1996; 62 FR 36464, July 8, 1997; 62 FR 61654, Nov. 19, 1997; 63 FR 25170–25173, May 7, 1998]

### § 68.4 Hearing aid-compatible telephones.

(a)(1) Except for telephones used with public mobile services, telephones used with private radio services, and cordless and secure telephones, every telephone manufactured in the United States (other than for export) or imported for use in the United States after August 16, 1989, must be hearing aid compatible, as defined in § 68.316. Every cordless telephone manufactured in the United States (other than for export) or imported into the United States after August 16, 1991, must be hearing aid compatible, as defined in § 68.316.

(2) Unless otherwise stated and except for telephones used with public mobile services, telephones used with private radio services and secure telephones, every telephone listed in § 68.112 must be hearing aid compatible, as defined in § 68.316.

(3) A telephone is hearing aid-compatible if it provides internal means for effective use with hearing aids that are designed to be compatible with telephones which meet established technical standards for hearing aid compatibility.

(4) The Commission shall revoke or otherwise limit the exemptions of paragraph (a)((1) of this section for telephones used with public mobile services or telephones used with private radio services if it determines that (i) such revocation or limitation is in the public interest; (ii) continuation of the exemption without such revocation or limitation would have an adverse effect on hearing-impaired individuals; (iii) compliance with the requirements of § 68.4(a)(1) is technologically feasible for the telephones to which the exemption applies; and (iv) compliance with the requirements of § 68.4(a)(1) would not increase costs to such an extent that the telephones to which the exemption applies could not be successfully marketed.

[54 FR 21430, May 18, 1989, as amended at 55 FR 28763, July 13, 1990; 57 FR 27183, June 18, 1992; 61 FR 42186, Aug. 14, 1996]

### § 68.5 Waivers.

The Commission may, upon the application of any interested person, initiate a proceeding to waive the requirements of § 68.4(a)(1) with respect to new telephones, or telephones associated with a new technology or service. The Commission shall not grant such a waiver unless it determines, on the basis of evidence in the record of such proceeding, that such telephones, or such technology or service, are in the public interest, and that (a) compliance with the requirements of § 68.4(a)(1) is technologically infeasible, or (b) compliance with such requirements would increase the costs of the telephones, or of the technology or service, to such an extent that such telephones, technology, or service could not be successfully marketed. In any proceeding under this section to grant a waiver from the requirements of § 68.4(a)(1), the Commission shall consider the effect on hearing-impaired individuals of granting the waiver. The Commission shall periodically review and determine the continuing need for any waiver granted pursuant to this section.

[54 FR 21430, May 18, 1989]

### § 68.6 Telephones with volume control.

As of January 1, 2000, all telephones, including cordless telephones, as defined in § 15.3(j) of this chapter, manufactured in the United States (other than for export) or imported for use in the United States, must have volume control in accordance with § 68.317. Secure telephones, as defined by § 68.3 are exempt from this section, as are telephones used with public mobile services or private radio services.

[62 FR 43484, Aug. 14, 1997]

## Subpart B—Conditions on Use of Terminal Equipment

### § 68.100 General.

In accordance with the rules and regulations in subpart B of this part, terminal equipment may be directly connected to the public switched telephone network and to those private line services included in § 68.2(a).

[51 FR 944, Jan. 9, 1986]

### § 68.102 Registration requirement.

Terminal equipment must be registered in accordance with the rules

and regulations in subpart C of this part, or connected through registered protective circuitry, which is registered in accordance with the rules and regulations in subpart C of this part.

### § 68.104 Means of connection.

(a) *General.* Any jack installed by the telephone company at, or constituting, the demarcation point shall conform to subpart F of this part. Subject to the requirements of § 68.213, connection of wiring and terminal equipment to the telephone network may be made through a jack conforming to subpart F or by direct attachment to carrier-installed wiring including, but not limited to, splicing, bridging, twisting and soldering. Telephone company-provided ringers may be connected to the network in accordance with the carrier's reasonable and nondiscriminatory standard operating practices. Connection to the network of wiring subject to § 68.215 and terminal equipment used therewith shall be through telephone company-provided jacks conforming to subpart F of this part, in such a manner as to allow for easy and immediate disconnection.

(b) *Data equipment.* Where a customer desires to connect data equipment which has been registered in accordance with § 68.308(b)(4)(i) or (ii), he shall notify the telephone company of each telephone line to which he intends to connect such equipment. The telephone company after determining the attenuation of each such telephone line between the interface and the telephone company central office, will make such connections as are necessary in each standard data jack which it will install, so as to allow the maximum signal power delivered by such data equipment to the telephone company central office to reach but not exceed the maximum allowable signal power permitted at the telephone company central office.

(c) *Tariff description.* As an alternative to description in subpart F of these rules, connections to the telephone network may be made through standard plugs and standard telephone company-provided jacks or equivalent described in nationwide telephone tariffs: *Provided,* That these means of connection otherwise comply with paragraphs (a) and (b) of this section.

[45 FR 20853, Mar. 31, 1980, as amended at 55 FR 28630, July 12, 1990; 61 FR 42392, Aug. 15, 1996; 61 FR 47434, Sept. 9, 1996]

### § 68.106 Notification to telephone company.

(a) *General.* Customers connecting terminal equipment or protective circuitry to the telephone network shall, upon request of the telephone company, inform the telephone company of the particular line(s) to which such connection is made, the FCC registration number and ringer equivalence number of the registered terminal equipment or registered protective circuitry.

(b) *Systems assembled of combinations of individually-registered terminal equipment and protective circuitry.* Customers connecting such assemblages to the telephone network shall, upon the request of the telephone company, provide to the telephone company the following information:

(1) For each line:

(i) Information required for compatible operation of the equipment with telephone company communications facilities.

(ii) The FCC Registration Numbers for all equipment dedicated to that line.

(iii) The largest Ringer Equivalence to be presented to that line.

(2) A list of FCC Registration Numbers for equipment to be used in the system.

(c) *Systems using other than ''fully-protected'' premises wiring.* Customers who intend to connect premises wiring other than ''fully-protected'' premises wiring to the telephone network shall, in addition to the foregoing, give notice to the telephone company in accordance with § 68.215(e).

(d) *AIOD trunk and station number verification.* Customers who intend to install or have installer performed additions to and rearrangements of AIOD functions shall give notice to the telephone company in accordance with § 68.222(d).

(e) *OPS.* Customers who intend to connect to OPS facilities shall inform the telephone company of OPS class for

which the equipment is registered and connection is desired.

[45 FR 20853, Mar. 31, 1980, as amended at 50 FR 47548, Nov. 19, 1985]

### § 68.108 Incidence of harm.

Should terminal equipment, inside wiring, plugs and jacks, or protective circuitry cause harm to the telphone network, or, should the carrier reasonably determine that such harm is imminent, the telephone company shall, where practicable, notify the customer that temporary discontinuance of service may be required; however, wherever prior notice is not practicable, the telephone company may temporarily discontinue service forthwith, if such action is reasonable under the circumstances. In case of such temporary discontinuance, the telephone company shall:

(a) Promptly notify the customer of such temporary discontinuance;

(b) Afford the customer the opportunity to correct the situation which gave rise to the temporary discontinuance; and

(c) Inform the customer of his right to bring a complaint to the Commission pursuant to the procedures set forth in subpart E of this part.

[55 FR 28630, July 12, 1990]

### § 68.110 Compatibility of the telephone network and terminal equipment.

(a) *Availability of interface information.* Technical information concerning interface parameters not specified in this part, including the number of ringers which may be connected to a particular telephone line, which is needed to permit terminal equipment to operate in a manner compatible with telephone company communications facilities, shall be provided by the telephone company upon request.

(b) *Changes in telephone company facilities, equipment, operations or procedures.* The telephone company may make changes in its communications facilities, equipment, operations or procedures, where such action is reasonably required in the operation of its business and is not inconsistent with the rules and regulations in this part. If such changes can be reasonably expected to render any customer's terminal equipment incompatible with telephone company communications facilities, or require modification or alteration of such terminal equipment, or otherwise materially affect its use or performance, the customer shall be given adequate notice in writing, to allow the customer an opportunity to maintain uninterrupted service.

(c) *Availability of inside wiring information.* Any available technical information concerning wiring on the customer side of the demarcation point, including copies of existing schematic diagrams and service records, shall be provided by the telephone company upon request of the building owner or agent thereof. The telephone company may charge the building owner a reasonable fee for this service, which shall not exceed the cost involved in locating and copying the documents. In the alternative, the telephone company may make these documents available for review and copying by the building owner. In this case, the telephone company may charge a reasonable fee, which shall not exceed the cost involved in making the documents available, and may also require the building owner to pay a deposit to guarantee the documents' return.

[45 FR 20841, Mar. 31, 1980, as amended at 62 FR 36464, July 8, 1997]

### § 68.112 Hearing aid-compatibility.

(a) *Coin telephones.* All new and existing coin-operated telephones, whether located on public property or in a semi-public location (*e.g.* drugstore, gas station, private club).

(b) *Emergency use telephones.* Telephones ''provided for emergency use'' include the following:

(1) Telephones, except headsets, in places where a person with a hearing disability might be isolated in an emergency, including, but not limited to, elevators, highways, and tunnels for automobile, railway or subway, and workplace common areas.

NOTE TO PARAGRAPH (b)(1): Examples of workplace common areas include libraries, reception areas and similar locations where employees are reasonably expected to congregate.

(2) Telephones specifically installed to alert emergency authorities, including, but not limited to, police or fire departments or medical assistance personnel.

(3) Telephones, except headsets, in workplace non-common areas. Note: Examples of workplace non-common areas include private enclosed offices, open area individual work stations and mail rooms. Such non-common area telephones are required to be hearing aid compatible, as defined in §68.316, by January 1, 2000, except for those telephones located in establishments with fewer than fifteen employees; and those telephones purchased between January 1, 1985 through December 31, 1989, which are not required to be hearing aid compatible, as defined in §68.316, until January 1, 2005.

(i) Telephones, including headsets, made available to an employee with a hearing disability for use by that employee in his or her employment duty, shall, however, be hearing aid compatible, as defined in §68.316.

(ii) As of January 1, 2000 or January 1, 2005, whichever date is applicable, there shall be a rebuttable presumption that all telephones located in the workplace are hearing aid compatible, as defined in §68.316. Any person who identifies a telephone as non-hearing aid-compatible, as defined in §68.316, may rebut this presumption. Such telephone must be replaced within fifteen working days with a hearing aid compatible telephone, as defined in §68.316, including, on or after January 1, 2000, with volume control, as defined in §68.317.

(iii) Telephones, not including headsets, except those headsets furnished under paragraph (b)(3)(i) of this section, that are purchased, or replaced with newly acquired telephones, must be:

(A) Hearing aid compatible, as defined in §68.316, after October 23, 1996; and

(B) Include volume control, as defined in §68.317, on or after January 1, 2000.

(iv) When a telephone under paragraph (b)(3)(iii) of this section is replaced with a telephone from inventory existing before October 23, 1996, any person may make a bona fide request that such telephone be hearing aid compatible, as defined in §68.316. If the replacement occurs on or after January 1, 2000, the telephone must have volume control, as defined in §68.317. The telephone shall be provided within fifteen working days.

(v) During the period from October 23, 1996, until the applicable date of January 1, 2000 or January 1, 2005, workplaces of fifteen or more employees also must provide and designate telephones for emergency use by employees with hearing disabilities through one or more of the following means:

(A) By having at least one coin-operated telephone, one common area telephone or one other designated hearing aid compatible telephone within a reasonable and accessible distance for an individual searching for a telephone from any point in the workplace; or

(B) By providing wireless telephones that meet the definition for hearing aid compatible for wireline telephones, as defined in §68.316, for use by employees in their employment duty outside common areas and outside the offices of employees with hearing disabilities.

(4) All credit card operated telephones, whether located on public property or in a semipublic location (e.g. drugstore, gas station, private club), unless a hearing aid compatible (as defined in §68.316) coin-operated telephone providing similar services is nearby and readily available. However, regardless of coin-operated telephone availability, all credit card operated telephones must be made hearing aid-compatible, as defined in §68.316, when replaced, or by May 1, 1991, which ever comes sooner.

(5) Telephones needed to signal life threatening or emergency situations in confined settings, including but not limited to, rooms in hospitals, residential health care facilities for senior citizens, and convalescent homes:

(i) A telephone that is hearing aid compatible, as defined in §68.316, is not required until:

(A) November 1, 1997, for establishments with fifty or more beds, unless replaced before that time; and

(B) November 1, 1998, for all other establishments with fewer than fifty beds, unless replaced before that time.

(ii) Telephones that are purchased, or replaced with newly acquired telephones, must be:

(A) Hearing aid compatible, as defined in § 68.116, after October 23, 1996; and

(B) Include volume control, as defined in § 68.317, on or after January 1, 2000.

(iii) Unless a telephone in a confined setting is replaced pursuant to paragraph (b)(5)(ii) of this section, a hearing aid compatible telephone shall not be required if:

(A) A telephone is both purchased and maintained by a resident for use in that resident's room in the establishment; or

(B) The confined setting has an alternative means of signalling life-threatening or emergency situations that is available, working and monitored.

(6) Telephones in hotel and motel guest rooms, and in any other establishment open to the general public for the purpose of overnight accommodation for a fee. Such telephones are required to be hearing aid compatible, as defined in § 68.316, except that, for establishments with eighty or more guest rooms, the telephones are not required to be hearing aid compatible, as defined in § 68.316, until November 1, 1998; and for establishments with fewer than eighty guest rooms, the telephones are not required to be hearing aid compatible, as defined in § 68.316, until November 1, 1999.

(i) Anytime after October 23, 1996, if a hotel or motel room is renovated or newly constructed, or the telephone in a hotel or motel room is replaced or substantially, internally repaired, the telephone in that room must be:

(A) Hearing aid compatible, as defined in § 68.316, after October 23, 1996; and

(B) Include volume control, as defined in § 68.317, on or after January 1, 2000.

(ii) The telephones in at least twenty percent of the guest rooms in a hotel or motel must be hearing aid compatible, as defined in § 68.316, as of April 1, 1997.

(iii) Notwithstanding the requirements of paragraph (b)(6) of this section, hotels and motels which use telephones purchased during the period January 1, 1985 through December 31, 1989 may provide telephones that are hearing aid compatible, as defined in § 68.316, in guest rooms according to the following schedule:

(A) The telephones in at least twenty percent of the guest rooms in a hotel or motel must be hearing aid compatible, as defined in § 68.316, as of April 1, 1997;

(B) The telephones in at least twenty-five percent of the guest rooms in a hotel or motel must be hearing aid compatible, as defined in § 68.316, by November 1, 1999; and

(C) The telephones in one-hundred percent of the guest rooms in a hotel or motel must be hearing aid compatible, as defined in § 68.316, by January 1, 2001 for establishments with eighty or more guest rooms, and by January 1, 2004 for establishments with fewer than eighty guest rooms.

(c) *Telephones frequently needed by the hearing impaired.* Closed circuit telephones, i.e., telephones which cannot directly access the public switched network, such as telephones located in lobbies of hotels or apartment buildings; telephones in stores which are used by patrons to order merchandise; telephones in public transportation terminals which are used to call taxis or to reserve rental automobiles, need not be hearing aid compatible, as defined in § 68.316, until replaced.

[49 FR 1362, Jan. 11, 1984, as amended at 55 FR 28763, July 13, 1990; 57 FR 27183, June 18, 1992; 61 FR 42186, Aug. 14, 1996; 61 FR 42392, Aug. 15, 1996; 62 FR 43484, Aug. 14, 1997; 62 FR 51064, Sep. 30, 1997]

### § 68.160 Designation of Telecommunication Certification Bodies (TCBs).

(a) The Commission may designate Telecommunication Certification Bodies (TCBs) to approve equipment as required under this part. Certification of equipment by a TCB shall be based on an application with all the information specified in this part. The TCB shall process the application to determine whether the product meets the Commission's requirements and shall issue a written grant of equipment authorization. The grant shall identify the TCB and the source of authority for issuing it.

(b) The Federal Communications Commission shall designate TCBs in

the United States to approve equipment subject to certification under the Commission's rules. TCBs shall be accredited by the National Institute of Standards and Technology (NIST) under its National Voluntary Conformity Assessment Evaluation (NVCASE) program or other recognized programs based on ISO/IEC Guide 65, to comply with the Commission's qualification criteria for TCBs. NIST may, in accordance with its procedures, allow other appropriately qualified accrediting bodies to accredit TCBs and testing laboratories. TCBs shall comply with the requirements in § 68.162 of this part.

(c) In accordance with the terms of an effective bilateral or multilateral mutual recognition agreement or arrangement (MRA) to which the United States is a party, bodies outside the United States shall be permitted to authorize equipment in lieu of the Commission. A body in an MRA partner economy may authorize equipment to U.S. requirements only if that economy permits bodies in the United States to authorize equipment to its requirements. The authority designating these telecommunication certification bodies shall meet the following criteria.

(1) The organization accrediting the prospective telecommunication certification body shall be capable of meeting the requirements and conditions of ISO/IEC Guide 61.

(2) The organization assessing the telecommunication certification body shall appoint a team of qualified experts to perform the assessment covering all of the elements within the scope of accreditation. For assessment of telecommunications equipment, the areas of expertise to be used during the assessment shall include, but not be limited to, electromagnetic compatibility and telecommunications equipment (wired and wireless).

[64 FR 4997, Feb. 2, 1999]

### § 68.162 Requirements for Telecommunication Certification Bodies.

(a) Telecommunication certification bodies (TCBs) designated by the Commission, or designated by another authority pursuant to an effective mutual recognition agreement or arrangement to which the United States is a party, shall comply with the following requirements.

(b) *Certification methodology*. (1) The certification system shall be based on type testing as identified in sub-clause 1.2(a) of ISO/IEC Guide 65.

(2) Certification shall normally be based on testing no more than one unmodified representative sample of each product type for which certification is sought. Additional samples may be requested if clearly warranted, such as when certain tests are likely to render a sample inoperative.

(c) *Criteria for designation*. (1) To be designated as a TCB under this section, an entity shall, by means of accreditation, meet all the appropriate specifications in ISO/IEC Guide 65 for the scope of equipment it will certify. The accreditation shall specify the group of equipment to be certified and the applicable regulations for product evaluation.

(2) The TCB shall demonstrate expert knowledge of the regulations for each product with respect to which the body seeks designation. Such expertise shall include familiarity with all applicable technical regulations, administrative provisions or requirements, as well as the policies and procedures used in the application thereof.

(3) The TCB shall have the technical expertise and capability to test the equipment it will certify and shall also be accredited in accordance with ISO/IEC Guide 25 to demonstrate it is competent to perform such tests.

(4) The TCB shall demonstrate an ability to recognize situations where interpretations of the regulations or test procedures may be necessary. The appropriate key certification and laboratory personnel shall demonstrate a knowledge of how to obtain current and correct technical regulation interpretations. The competence of the telecommunication certification body shall be demonstrated by assessment. The general competence, efficiency, experience, familiarity with technical regulations and products included in those technical regulations, as well as compliance with applicable parts of the ISO/IEC Guides 25 and 65, shall be taken into consideration.

(5) A TCB shall participate in any consultative activities, identified by the Commission or NIST, to facilitate a common understanding and interpretation of applicable regulations.

(6) The Commission will provide public notice of specific elements of these qualification criteria that will be used to accredit TCBs.

(d) *Sub-contractors.* (1) In accordance with the provisions of sub-clause 4.4 of ISO/IEC Guide 65, the testing of a product, or a portion thereof, may be performed by a sub-contractor of a designated TCB, provided the laboratory has been assessed by the TCB as competent and in compliance with the applicable provisions of ISO/IEC Guide 65 and other relevant standards and guides.

(2) When a subcontractor is used, the TCB shall be responsible for the test results and shall maintain appropriate oversight of the subcontractor to ensure reliability of the test results. Such oversight shall include periodic audits of products that have been tested.

(e) *Designation of TCBs.* (1) The Commission will designate as a TCB any organization that meets the qualification criteria and is accredited by NIST or its recognized accreditor.

(2) The Commission will withdraw the designation of a TCB if the TCB's accreditation by NIST or its recognized accreditor is withdrawn, if the Commission determines there is just cause for withdrawing the designation, or if the TCB requests that it no longer hold the designation. The Commission will provide a TCB with 30 days notice of its intention to withdraw the designation and provide the TCB with an opportunity to respond.

(3) A list of designated TCBs will be published by the Commission.

(f) *Scope of responsibility*. (1) TCBs shall certify equipment in accordance with the Commission's rules and policies.

(2) A TCB shall accept test data from any source, subject to the requirements in ISO/IEC Guide 65, and shall not unnecessarily repeat tests.

(3) TCBs may establish and assess fees for processing certification applications and other tasks as required by the Commission.

(4) A TCB may rescind a grant of certification within 30 days of grant for administrative errors. After that time, a grant can only be revoked by the Commission. A TCB shall notify both the applicant and the Commission when a grant is rescinded.

(5) A TCB may not:

(i) Grant a waiver of the rules, or certify equipment for which the Commission rules or requirements do not exist or for which the application of the rules or requirements is unclear.

(ii) Take enforcement actions.

(6) All TCB actions are subject to Commission review.

(g) *Post-certification requirements.* (1) A TCB shall supply a copy of each approved application form and grant of certification to the Commission.

(2) In accordance with ISO/IEC Guide 65, a TCB is required to conduct appropriate surveillance activities. These activities shall be based on type testing a few samples of the total number of product types which the certification body has certified. Other types of surveillance activities of a product that has been certified are permitted, provided they are no more onerous than testing type. The Commission may at any time request a list of products certified by the certification body and may request and receive copies of product evaluation reports. The Commission may also request that a TCB perform post-market surveillance, under Commission guidelines, of a specific product it has certified.

(3) If during post market surveillance of a certified product, a certification body determines that a product fails to comply with the applicable technical regulations, the certification body shall immediately notify the grantee and the Commission. A follow-up report shall also be provided within thirty days of the action taken by the grantee to correct the situation.

(4) Where concerns arise, the TCB shall provide a copy of the application file within 30 calendar days upon request by the Commission to the TCB and the manufacturer. Where appropriate, the file should be accompanied by a request for confidentiality for any material that qualifies as trade secrets. If the application file is not provided within 30 calendar days, a statement

shall be provided to the Commission as to why it cannot be provided.

(h) In case of a dispute with respect to designation or recognition of a TCB and the testing or certification of products by a TCB, the Commission will be the final arbiter. Manufacturers and designated TCBs will be afforded at least 30 days to comment before a decision is reached. In the case of a TCB designated or recognized, or a product certified pursuant to an effective bilateral or multilateral mutual recognition agreement or arrangement (MRA) to which the United States is a party, the Commission may limit or withdraw its recognition of a TCB designated by an MRA party and revoke the certification of products using testing or certification provided by such a TCB. The Commission shall consult with the Office of the United States Trade Representative (USTR), as necessary, concerning any disputes arising under an MRA for compliance with under the Telecommunications Trade Act of 1988 (Section 1371–1382 of the Omnibus Trade and Competitiveness Act of 1988).

[64 FR 4998, Feb. 2, 1999]

## Subpart C—Registration Procedures

### § 68.200 Application for equipment registration.

An original and one copy of an application for registration of terminal equipment and protective circuitry shall be submitted on FCC Form 730 to the Federal Communications Commission, Washington, DC 20554 (Applications requiring fees as set forth at part 1, subpart G of this chapter must be filed in accordance with § 0.401(b) of the rules). An application for original approval of an equipment type directly connected to the network on May 1, 1976, may be submitted as a short form application (unless the Commission specifically requests the filing of complete information). All other applications shall have all questions answered and include the following information:

(a) Identification, technical description and purpose of the equipment for which registration is sought.

(b) The means, if any, employed to limit signal power into interface.

(c) A description of all circuitry employed in assuring compliance with this part 68 including the following:

(1) Specifications, including voltage or current ratings of all circuit elements whether active or passive, in that part of the equipment or circuitry which ensures compliance with subpart D of this part.

(2) A circuit diagram containing the complete circuit of that part of the equipment or circuitry which ensures compliance with subpart D of this part. If this portion of the device is subject to factory or field adjustment by the applicant or an agent thereof, instructions for these adjustments shall be included. In addition, if the equipment or circuitry is designed to operate from power supplied by electric utility lines, the circuit diagram shall also include that portion of the device connected to such lines, including the power supply to the internal circuitry, and whatever means are employed to isolate such utility lines from the internal circuitry.

(3) If a service manual is submitted, and any of these items are covered therein, it will be sufficient to list the pages in the manual on which the information specified in the item(s) appear.

(d) A statement that the terminal equipment or protective circuitry complies with and will continue to comply with the rules and regulations in subpart D of this part, accompanied by such test results, description of test procedures, analyses, evaluations, quality control standards and quality assurance standards as are necessary to demonstrate that such terminal equipment or protective circuitry complies with and will continue to comply with all the applicable rules and regulations in subpart D of this part. The Common Carrier Bureau will publish a Registration Application Guide referencing acceptable test procedures; but other test methods may be employed provided they are fully described in the application and are found acceptable by the Commission.

(e) A photograph, sample or drawing of the equipment label showing the information to be placed thereon.

(f) Photographs, of size A4 (12.0 cm x 29.7 cm) or 8 x 10 inches (20.3 cm x 25.4

cm) of the equipment of sufficient clarity to reveal equipment construction and layout and labels for controls, with sufficient views of the internal construction to define component placement and chassis assembly. Photographs smaller than A4 (21.0 cm x 29.7 cm) or 8 x 10 inches (20.3 cm x 25.4 cm) will be acceptable if mounted on paper A4 (21.0 cm x 29.7 cm) or 8 x 10 inches (20.3 cm x 25.4 cm) and of sufficient clarity for the purpose. Insofar as these requirements are met by photographs or drawings contained in service manual or instruction manual included with the application, additional photographs are required only to complete the required showing.

(g) If the device covered by the application is designed to operate in conjunction with other equipment, the characteristics of which can affect compliance of the device covered by the application with subpart D of this part, then such other equipment must also be registered. If such other equipment already is registered, then the FCC Registration Number(s) must be supplied.

(h) Electrically transparent adapters, extension cords, line-transfer swiches and cross-connect panels need not be registered provided they meet the requirements of § 68.304(a) and the temperature-humidity requirements of § 68.302(b). Descriptive installation procedures for cross-connect panels (where used) must be provided in equipment registration applications. Additional requirements include:

(1) An extension cord must consist of a male connector and a female connector and wiring between them which is no longer than 7.6 meters (25 feet).

(2) Transfer switches must be manually operated, not use relays, and be wired in a balanced tip and ring configurations. Switch wiring must be ''fully protected'' wiring, no longer than 7.6 meters (25 feet).

(i) Any application for registration or modification of the registration of a telephone, filed on or after March 1, 1984, shall state whether the handset complies with § 68.316 of these rules (defining hearing aid compatibility), or state that it does not comply with that section. A telephone handset which complies with § 68.316 shall be deemed a ''hearing aid-compatible telephone'' for purposes of § 68.4.

(j) Terminal equipment having the following lead connections to standard jacks or adapters are subject to the following compliance tests:

(1) *Make-busy leads:* The MB and MB1 leads shall be considered telephone connections and comply with the requirements of §§ 68.304 and 68.306 when isolated from tip and ring. When the corresponding telephone line is of the loop-start type the tip and ring leads shall comply with all part 68 rules when the MB and MB1 leads are bridged to the tip and ring connections.

(2) *Continuity leads:* Leakage current limitations shall be met as specified in § 68.304. The design of the terminal equipment shall assure that the open circuit dc voltage to ground shall not exceed 18 volts; the dc current in a short circuit across CY1 and CY2 shall not exceed 10 milliamperes; and any ac voltage to ground appearing on the continuity leads from sources in the terminal equipment shall not exceed 5 volts peak. The leads, CY1 and CY2, shall be treated as telephone connections for the purpose of hazardous voltage limitation tests and are only required to comply with § 68.304, 68.306(a) and (b)(1). Terminal equipment furnished with CY1 and CY2 leads shall comply with the criteria of § 68.308 and 68.314 with a short circuit across the CY1 and CY2 leads.

(3) Specialty adapters need only be evaluated for compliance with §§ 68.304 and 68.310 under the conditions specified in § 68.310. Resistors used for setting signal power levels must meet the requirements of § 68.502(e). Specialty adapters may be labelled, ''FCC Reg. No. XXX''. (The proper number should be included.) The other information required by §§ 68.300 need not be provided.

(4) Data jack programmed resistor leads (PR and PC): *See* § 68.502(e). Leakage current limitations shall be met as specified in § 68.304. PR and PC will be treated as telephone connections for the purpose of hazardous voltage limitation tests and are only required to comply with § 68.306(a) and (b)(1). Equipment furnished with PR and PC leads shall comply with the criteria of

§§68.308 and 68.314 for all permitted values of the programming resistor specified in §68.502(e).

(k) Any application for registration of a cordless telephone operating under the provisions of part 15 of this chapter shall be accompanied by a statement indicating that the device contains appropriate provision for protection of the public switched telephone network, pursuant to the requirements in §15.214 of this chapter.

[41 FR 8048, Feb. 24, 1976, as amended at 42 FR 32244, June 24, 1977; 49 FR 1363, Jan. 11, 1984; 49 FR 48720, Dec. 14, 1984; 51 FR 944, Jan. 9, 1986; 51 FR 12616, Apr. 14, 1986; 52 FR 10231, Mar. 31, 1987; 56 FR 3785, Jan. 31, 1991; 58 FR 44907, Aug. 25, 1993; 61 FR 42392, Aug. 15, 1996]

### §68.202 Public notice.

(a) The Commission will issue public notices of the filing of applications for equipment registrations and the grants thereof. No grant will issue before five days from the date of the public notice of the filing of the application.

(b) The Commission will maintain lists of equipment for which it has granted registration and for which it has revoked registration.

[41 FR 8049, Feb. 24, 1976, as amended at 50 FR 47548, Nov. 19, 1985]

### §68.204 Comments and replies.

Comments may be filed as to any application for equipment registration within five days of the date of the public notice of its filing. Replies to such comments may be filed within five days of the filing of such comments. All comments must be served on all parties filing comments. An original and three copies of all comments and replies must be filed.

[50 FR 47548, Nov. 19, 1985]

### §68.206 Grant of application.

(a) The Commission will grant an application for equipment registration if it finds from an examination of such application and other matter which it may officially notice, that the equipment will comply with the rules and regulations in subpart D of this part, or that such grant will otherwise serve the public interest.

(b) Grants will be made in writing showing the effective date of the grant and any special condition(s) attaching to the grant.

(c) Equipment registration shall not attach to any equipment, nor shall any equipment registration be deemed effective, until the application has been granted.

### §68.208 Dismissal and return of application.

(a) An application which is not filed in accordance with the requirements of this part or which is defective with respect to completeness of answers to questions, execution or other matters of a formal character, may not be accepted for filing by the Commission and may be returned as unacceptable for filing unless accompanied by a fully supported request for waiver.

(b) Any application, upon written request, may be dismissed prior to a determination granting or denying the equipment registration requested.

(c) If an applicant is requested by the Commission to furnish any additional documents, information or equipment not specifically required by this subpart, a failure to comply with the request within the time, if any, specified by the Commission will result in the dismissal of such application.

[40 FR 53023, Nov. 14, 1975, as amended at 41 FR 8049, Feb. 24, 1976; 61 FR 42392, Aug. 15, 1996]

### §68.210 Denial of application.

If the Commission is unable to make the findings specified in §68.206 it will deny the application. Notification of the denial will include a statement of the reasons for the denial.

### §68.211 Registration revocation procedures.

(a) *Cause for revocation*. The Commission may revoke the Part 68 registration of a registrant:

(1) Who has obtained the equipment registration by misrepresentation;

(2) Whose registered equipment is shown to cause harm to the network;

(3) Who willfully or repeatedly fails to comply with the terms and conditions of its Part 68 registration; or

(4) Who willfully or repeatedly fails to comply with any rule, regulation or order issued by the Commission under

the Communications Act of 1934 relating to equipment registration.

(b) *Notice of Intent to Revoke Part 68 Registration*. Before revoking a Part 68 registration under the provisions of this section, the Commission, or the Common Carrier Bureau under delegated authority, will issue a written Notice of Intent to Revoke Part 68 Registration, or Joint Notice of Apparent Liability for Forfeiture and Intent to Revoke Part 68 Registration pursuant to §§ 1.80 and 1.89 of this chapter.

(1) *Contents of the Notice*. The Notice will:

(i) Identify the registration date(s) and registration number(s) of the equipment, and the rule or federal law apparently violated;

(ii) Set forth the nature of the act or omission charged against the registrant, and the facts upon which such charge is based;

(iii) Specify that in the event of revocation, the registrant may not reapply for registration of the same product for a period of six months; and

(iv) Specify that revocation of the registration may be in addition to, or in lieu of, an amount in forfeiture levied pursuant to § 1.80 of this chapter.

(c) *Delivery*. The Notice will be sent via certified mail to the registrant at the address certified in the Part 68 application associated with the registration at issue.

(d) *Response*. The registrant will be given a reasonable period of time (usually 30 days from the date of the Notice) to show, in writing, why its part 68 registration should not be revoked or why the forfeiture penalty should not be imposed or should be reduced.

(e) *Reapplication*. A registrant whose registration has been revoked may not apply for registration of the same product for a period of six months from the date of revocation of the registration.

(f) *Reconsideration or appeal*. A registrant who is issued a revocation of equipment registration and/or forfeiture assessment may request reconsideration or make administrative appeal of the decision pursuant to Part 1 of the Commission's rules—Practice and Procedure, Part 1 of this chapter.

[61 FR 42392, Aug. 15, 1996]

**§ 68.212 Assignment of equipment registration.**

Commission equipment registration may not be assigned, exchanged or in any other way transferred to another party, without prior written notice to the Commission.

**§ 68.213 Installation of other than "fully protected" non-system simple customer premises wiring.**

(a) *Scope of this rule*. Provisions of this rule apply only to ''unprotected'' premises wiring used with simple installations of wiring for up to four line residential and business telephone service. More complex installations of wiring for multiple line services, for use with systems such as PBX and key telephone systems, are controlled by § 68.215 of these rules.

(b) *Wiring authorized*. Unprotected premises wiring may be used to connect units of terminal equipment or protective circuitry to one another, and to carrier-installed facilities if installed in accordance with these rules. The telephone company is not responsible, except pursuant to agreement between it and the customer or undertakings by it, otherwise consistent with Commission requirements, for installation and maintenance of wiring on the subscriber's side of the demarcation point, including any wire or jacks that may have been installed by the carrier. The subscriber and/or premises owner may install wiring on the subscriber's side of the demarcation point, and may remove, reconfigure, and rearrange wiring on that side of the demarcation point including wiring that may have been installed by the carrier. The customer or premises owner may not access carrier wiring and facilities on the carrier's side of the demarcation point. Customers may not access the telephone company-installed protector. All plugs and jacks used in connection with inside wiring shall conform to subpart F of this part. In multiunit premises with more than one customer, the premises owner may adopt a policy restricting a customer's access to wiring on the premises to only that wiring located in the customer's individual unit wiring that serves only that particular customer. *See* Demarcation

point definition, §68.3(b)(3). The customer or premises owner may not access carrier wiring and facilities on the carrier's side of the demarcation point. Customers may not access the telephone company-installed protector. All plugs and jacks used in connection with inside wiring shall conform to subpart F of this part.

(c) Material requirements. (1) For new installations and modifications to existing installations, copper conductors shall be, at a minimum, solid, 24 gauge or larger, twisted pairs that comply with the electrical specifications for Category 3, as defined in the ANSI EIA/TIA Building Wiring Standards.

(2) Conductors shall have insulation with a 1500 Volt rms minimum breakdown rating. This rating shall be established by covering the jacket or sheath with at least 15 cm (6 inches) (measured linearly on the cable) of conductive foil, and establishing a potential difference between the foil and all of the individual conductors connected together, such potential difference gradually increased over a 30 second time period to 1500 Volts rms, 60 Hertz, then applied continuously for one minute. At no time during this 90 second time interval shall the current between these points exceed 10 milliamperes peak.

(3) All wire and connectors meeting the requirements set forth in paragraphs (c)(1) and (c)(2) shall be marked, in a manner visible to the consumer, with the symbol ''CAT 3'' or a symbol consisting of a ''C'' with a ''3'' contained within the ''C'' character, at intervals not to exceed one foot (12 inches) along the length of the wire.

(d) *Attestation*. Manufacturers (or distributors or retailers, whichever name appears on the packaging) of non-system telephone premises wire shall attest in a letter to the Commission that the wire conforms with part 68, FCC Rules.

[49 FR 21734, May 23, 1984, as amended at 50 FR 29392, July 19, 1985; 50 FR 47548, Nov. 19, 1985; 51 FR 944, Jan. 9, 1986; 55 FR 28630, July 12, 1990; 58 FR 44907, Aug. 25, 1993; 62 FR 36464, July 8, 1997; 65 FR 4140, Jan. 26, 2000]

### §68.214 Changes in registered equipment and circuitry.

Changes in registered terminal equipment or registered protective circuitry shall be made as follows:

(a) No change in registered terminal equipment or registered protective circuitry that would result in any change in the information furnished the Commission pursuant to §68.200 may be made, except after grant of a new application made on FCC Form 730.

(b) Changes which do not result in any change in the information furnished the Commission pursuant to §68.200 may be made without express Commission approval. *Provided*, That prior written notification is given the Commission on FCC Form 730.

(c) Where equipment is registered by virtue of incorporation of registered protective circuitry therein, no notification need be given of changes to other than the protective circuitry, its mechanical and electrical connections to the equipment.

(d) Changes in registered terminal equipment or registered protective circuity made pursuant to paragraphs (b) and (c) of this section may be made only by the grantee, or an authorized agent thereof, and the grantee will remain responsible for the performance of such changes.

(e) Operations associated with installing, connecting, reconfiguring or removing (other than final removal) premises wiring to registered terminal equipment or registered protective circuitry are changes in this equipment or circuitry within the meaning of this Section, unless:

(1) The premises wiring involved is ''fully-protected'' premises wiring, or

(2) All such operations are performed in accordance with §68.215.

[42 FR 32244, June 24, 1977, as amended at 43 FR 16499, April 19, 1978]

### §68.215 Installation of other than "fully protected" system premises wiring that serves more than four subscriber access lines.

(a) *Types of wiring authorized*—(1) *Between equipment entities.* Unprotected

premises wiring, and protected premises wiring requiring acceptance testing for imbalance, may be used to connect separately-housed equipment entities to one another.

(2) *Between an equipment entity and the network interface(s).* Fully-protected premises wiring shall be used to connect equipment entities to the telephone network interface unless the local telephone company is unwilling or unable to locate the interface within 7.6 meters (25 feet) of the equipment entity on reasonable request. In any such case, other than fully-protected premises wiring may be used if otherwise in accordance with these rules.

(3) *Hardware protection as part of the telephone company's facilities.* In any case where the carrier chooses to provide (and the customer chooses to accept, except as authorized under paragraph (g) of this section), hardware protection on the network side of the interface(s), the presence of such hardware protection will affect the classification of premises wiring for the purposes of § 68.215, as appropriate.

(b) *Installation personnel.* Operations associated with the installation, connection, reconfiguration and removal (other than final removal of the entire premises communications system) of other than fully-protected premises wiring shall be performed under the supervision and control of a supervisor, as defined in paragraph (c) of this section. The supervisor and installer may be the same person.

(c) *Supervision.* Operations by installation personnel shall be performed under the responsible supervision and control of a person who:

(1) Has had at least six months of on-the-job experience in the installation of telephone terminal equipment or of wiring used with such equipment;

(2) Has been trained by the registrant of the equipment to which the wiring is to be connected in the proper performance of any operations by installation personnel which could affect that equipment's continued compliance with these rules;

(3) Has received written authority from the registrant to assure that the operations by installation personnel will be performed in such a manner as to comply with these rules.

(4) Or, in lieu of paragraphs (c) (1) through (3) of this section, is a licensed professional engineer in the jurisdiction in which the installation is performed.

(d) *Workmanship and material requirements*—(1) *General.* Wiring shall be installed so as to assure that there is adequate insulation of telephone wiring from commercial power wiring and grounded surfaces. Wiring is required to be sheathed in an insulating jacket in addition to the insulation enclosing individual conductors (see below) unless located in an equipment enclosure or in an equipment room with restricted access; it shall be assured that this physical and electrical protection is not damaged or abraded during placement of the wiring. Any intentional removal of wiring insulation (or a sheath) for connections or splices shall be accomplished by removing the *minimum* amount of insulation necessary to make the connection or splice, and insulation equivalent to that provided by the wire and its sheath shall be suitably restored, either by placement of the splices or connections in an appropriate enclosure, or equipment rooms with restricted access, or by using adequately-insulated connectors or splicing means.

(2) *Wire.* Insulated conductors shall have a jacket or sheath with a 1500 volt rms minimum breakdown rating, except when located in an equipment enclosure or an equipment room with restricted access. This rating shall be established by covering the jacket or sheath with at least 15 cm (6 in) (measured linearly on the cable) of conductive foil, and establishing a potential difference between the foil and all of the individual conductors connected together, such potential difference gradually increased over a 30 second time period to 1500 volts rms, 60 Hertz, then applied continuously for one minute. At no time during this 90 second time interval shall the current between these points exceed 10 milliamperes peak.

NOTE: This requirement is patterned after § 68.304.

(3) *Places where the jacket or sheath has been removed.* Any point where the jacket or sheath has been removed (or

is not required) shall be accessible for inspection. If such points are concealed, they shall be accessible without disturbing permanent building finish (e.g. by removing a cover).

(4) *Building and electrical codes.* All building and electrical codes applicable in the jurisdiction to telephone wiring shall be complied with. If there are no such codes applicable to telephone wiring, Article 800 of the 1978 National Electrical Code, entitled Communications Systems, and other sections of that Code incorporated therein by reference shall be complied with.

(5) *Limitations on electrical signals.* Only signal sources which emanate from the local telephone company central office, or which are generated in equipment at the customer's premises and are ''non-hazardous voltage sources'' (see §68.306(b)(4)) may be routed in premises telephone wiring, except for voltages for network control signaling and supervision which are consistent with standards employed by the local telephone company. Current on individual wiring conductors shall be limited to values which do not cause an excessive temperature rise, with due regard to insulation materials and ambient temperatures. The following table assumes a 45° C temperature rise for wire sizes 22 AWG or larger, and a 40° C rise for wire sizes smaller than 22 AWG, for poly-vinyl chloride insulating materials, and should be regarded as establishing *maximum* values to be derated accordingly in specific installations where ambient temperatures are in excess of 25° C:

MAXIMUM CONTINUOUS CURRENT CAPACITY OF PVC INSULATED COPPER WIRE, CONFINED

| Wire size, AWG | Circular mils | Maximum current, amperes |
|---|---|---|
| 32 | 63.2 | 0.32 |
| 30 | 100.5 | 0.52 |
| 28 | 159.8 | 0.83 |
| 26 | 254.1 | 1.3 |
| 24 | 404.0 | 2.1 |
| 22 | 642.4 | 5.0 |
| 20 | 1022 | 7.5 |
| 18 | 1624 | 10 |

NOTE: The total current in all conductors of multiple conductor cables may not exceed 20% of the sum of the individual ratings of all such conductors.

(6) *Physical protection.* In addition to the general requirements that wiring insulation be adequate and not damaged during placement of the wiring, wiring shall be protected from adverse effects of weather and the environment in which it is used. Where wiring is attached to building finish surfaces (surface wiring), it shall be suitably supported by means which do not affect the integrity of the wiring insulation.

(e) *Documentation requirements.* A notarized affidavit and one copy thereof shall be prepared by the installation supervisor in advance of each operation associated with the installation, connection, reconfiguration and removal of other than fully-protected premises wiring (except when accomplished functionally using a cross-connect panel), except when involved with removal of the entire premises communications system using such wiring. This affidavit and its copy shall contain the following information:

(1) The responsible supervisor's full name, business address and business telephone number.

(2) The name of the registrant(s) (or manufacturer(s), if grandfathered equipment is involved) of any equipment to be used electrically between the wiring and the telephone network interface, which does not contain inherent protection against hazardous voltages and longitudinal imbalance.

(3) A statement as to whether the supervisor complies with §68.215(c). Training and authority under §68.215(c)(2)–(3) is required from the registrant (or manufacturer, if grandfathered equipment is involved) of the first piece of equipment electrically connected to the telephone network interface, other than passive equipments such as extensions, cross-connect panels, or adapters. In general, this would be the registrant (or manufacturer) of a system's common equipment.

(4) The date(s) when placement and connection of the wiring will take place.

(5) The business affiliation of the installation personnel.

(6) Identification of specific national and local codes which will be adhered to.

(7) The manufacturer(s); a brief description of the wire which will be used (model number or type); its conformance with recognized standards for wire

if any (*e.g.,* Underwriters Laboratories listing, Rural Electrification Administration listing, ''KS-'' specification, etc.); and a general description of the attachment of the wiring to the structure (*e.g.,* run in conduit or ducts exclusively devoted to telephone wiring, ''fished'' through walls, surface attachment, etc.).

(8) The date when acceptance testing for imbalance will take place.

(9) The supervisor's signature.

The notarized original shall be submitted to the local telephone company at least ten calendar days in advance of the placement and connection of the wiring. This time period may be changed by agreement of the telephone company and the supervisor. The copy shall be maintained at the premises, available for inspection, so long as the wiring is used for telephone service.

(f) *Acceptance testing for imbalance.* Each telephone network interface that is connected directly or indirectly to other than fully-protected premises wiring shall be subjected to the acceptance test procedures specified in this section whenever an operation associated with the installation, connection, reconfiguration or removal of this wiring (other than final removal) has been performed.

(1) *Test procedure for two-way or outgoing lines or loops.* A telephone instrument may be associated directly or indirectly with the line or loop to perform this test if one is not ordinarily available to it:

(i) Lift the handset of the telephone instrument to create the off-hook state on the line or loop under test.

(ii) Listen for noise. Confirm that there is neither audible hum nor excessive noise.

(iii) Listen for dial tone. Confirm that dial tone is present.

(iv) Break dial tone by dialing a digit. Confirm that dial tone is broken as a result of dialing.

(v) With dial tone broken, listen for audible hum or excessive noise. Confirm that there is neither audible hum nor excessive noise.

(2) *Test procedure for incoming-only (non-originating) lines or loops.* A telephone instrument may be associated directly or indirectly with the line or loop to perform this test if one is not ordinarily available to it:

(i) Terminate the line or loop under test in a telephone instrument in the on-hook state.

(ii) Dial the number of the line or loop under test from another station, blocking as necessary other lines or loops to cause the line or loop under test to be reached.

(iii) On receipt of ringing on the line or loop under test, lift the handset of the telephone instrument to create the off-hook state on that line or loop.

(iv) Listen for audible hum or excessive noise. Confirm that there is neither audible hum nor excessive noise.

(3) *Failure of acceptance test procedures.* Absence of dial tone before dialing, inability to break dial tone, or presence of audible hum or excessive noise (or any combination of these conditions) during test of two-way or outgoing lines or loops indicates failure. Inability to receive ringing, inability to break ringing by going off-hook, or presence of audible hum or excessive noise (or any combination of these conditions) during test of incoming-only lines or loops indicates failure. Upon any such failure, the failing equipment or portion of the premises communications system shall be disconnected from the network interface, and may not be reconnected until the cause of the failure has been isolated or removed. Any previously tested lines or loops shall be retested if they were in any way involved in the isolation and removal of the cause of the failure.

(4) *Monitoring or participation in acceptance testing by the local telephone company.* The local telephone company may monitor or participate in the acceptance testing required under this section, in accordance with § 68.215(g) of this part, from its central office test desk or otherwise.

(g) *Extraordinary procedures.* The local telephone company is hereby authorized to limit the subscriber's right of connecting FCC-registered terminal equipment or protective circuitry with other than fully-protected premises wiring, but solely in accordance with this subsection and § 68.108 of these rules.

(1) *Conditions which may invoke these procedures.* The extraordinary procedures authorized herein may only be invoked where one or more of the following conditions is present:

(i) Information provided in the supervisor's affidavit gives reason to believe that a violation of part 68 of the FCC's rules is likely.

(ii) A failure has occurred during acceptance testing for imbalance.

(iii) Harm has occurred, and there is reason to believe that this harm was a result of wiring operations performed under this section.

The extraordinary procedures authorized in the following sub-sections shall not be used so as to discriminate between installations by local telephone company personnel and installations by others. In general, this would require that any charges for these procedures be levied in accordance with, or analgous to, the ''maintenance of service'' tariff provisions: If the installation proves satisfactory, no charge should be levied.

(2) *Monitoring or participation in acceptance testing for imbalance.* Notwithstanding the previous sub-section, the local telephone company may monitor or particapate in acceptance testing for imbalance at the time of the initial installation of wiring in the absence of the conditions listed therein; at any other time, one or more of the listed conditions shall be present. Such monitoring or participation in acceptance testing should be performed from the central office test desk where possible to minimize costs.

(3) *Inspection.* Subject to paragraph (g)(1) of this section, the local telephone company may inspect wiring installed pursuant to this section, and all of the splicing and connection points required to be accessible by §68.215(d)(3) to determine compliance with this section. The user or installation supervisor shall either authorize the telephone company to render the splicing and inspection points visible (e.g. by removing covers), or perform this action prior to the inspection. To minimize disruption of the premises communications system, the right of inspecting is limited as follows:

(i) During initial installation of wiring:

The telephone company may require withdrawal of up to 5 percent (measured linearly) of wiring run concealed in ducts, conduit or wall spaces, to determine conformance of the wiring to the information furnished in the affidavit.

(ii) After failure of acceptance testing or after harm has resulted from installed wiring:

The telephone company may require withdrawal of all wiring run concealed in ducts, conduit or wall spaces which reasonably could have caused the failure of harm, to determine conformance of the wiring to the information furnished in the affidavit.

In the course of any such inspection, the telephone company shall have the right to inspect documentation required to be maintained at the premises under §68.215(e).

(4) *Requiring the use of protective apparatus.* In the event that any of the conditions listed in paragraph (g)(1) of this section, arises, and is not permanently remedied within a reasonable time period, the telephone company may require the use of protective apparatus which either protects solely against hazardous voltages, or which protects both against hazardous voltages and imbalance. Such apparatus may be furnished either by the telephone company or by the customer. This right is in addition to the telephone company's rights under §68.108.

(5) *Notice of the right to bring a complaint.* In any case where the telephone company invokes the extraordinary procedures of §68.215(g), it shall afford the customer the opportunity to correct the situation which gave rise to invoking these procedures, and inform the customer of the right to bring a complaint to the Commission pursuant to the procedures set forth in subpart E of this part. On complaint, the Commission reserves the right to perform any of the inspections authorized under this section, and to require the performance of acceptance tests.

(h) *Limitations on the foregoing if protected wiring requiring acceptance testing is used.* If protected wiring is used which required acceptance testing, the requirements in the foregoing paragraphs of §68.215 are hereby limited, as follows:

(1) *Supervision.* Section 68.215(c)(2)–(3) are hereby waived. The supervisor is only required to have had at least six months of on-the-job experience in the installation of telephone terminal equipment or of wiring used with such equipment.

(2) *Extraordinary procedures.* Section 68.215(g)(3) is hereby limited to allow for inspection of exposed wiring and connection and splicing points, but not for requiring the withdrawal of wiring from wiring run concealed in ducts, conduit or wall spaces unless actual harm has occurred, or a failure of acceptance testing has not been corrected within a reasonable time. In addition, § 68.215(g)(4) is hereby waived.

[43 FR 16499, Apr. 19, 1978, as amended at 44 FR 7958, Feb. 8, 1979; 47 FR 37896, Aug. 27, 1982; 49 FR 21735, May 23, 1984; 58 FR 44907, Aug. 25, 1993]

### § 68.216 Repair of registered terminal equipment and registered protective circuitry.

Repair of registered terminal equipment and registered protective circuitry shall be accomplished only by the manufacturer or assembler thereof or by their authorized agent; however, routine repairs may be performed by a user, in accordance with the instruction manual if the applicant certifies that such routine repairs will not result in noncompliance with the rules and regulations in subpart D of this part.

### § 68.218 Responsibility of grantee of equipment registration.

(a) In applying for a grant of an equipment registration, the grantee warrants that each unit of equipment marketed under such grant will comply with all the applicable rules and regulations in subpart D of this part.

(b) The grantee or its agent shall provide the user of the registered equipment the following:

(1) Instructions concerning installation, operational and repair procedures, where applicable.

(2) Instructions that registered terminal equipment or protective circuitry may not be used with party lines or coin lines.

(3) Instructions that when trouble is experienced the customer shall disconnect the registered equipment from the telephone line to determine if the registered equipment is malfunctioning and that if the registered equipment is malfunctioning, the use of such equipment shall be discontinued until the problem has been corrected.

(4) Instructions that the user must give notice to the telephone company in accordance with the requirements of § 68.106, and instructions specifying the Universal Service Order Code(s), other than RJ11 (see § 68.502), of means of connection of the equipment which may be required to be ordered from the telephone company if not already installed.

(5) For a telephone which is not hearing aid-compatible, as defined in § 68.316 of these rules:

(i) Notice that FCC rules prohibit the use of that handset in certain locations; and

(ii) A list of such locations (see § 68.112).

(6) For registered devices used in connection with 1.544 Mbps digital services, instructions that the user must notify the telephone company prior to disconnection of such registered devices.

A telephone company which provides and installs the registered equipment need only provide the user with the information required in paragraphs (b)(1), (3) and (5) of this section.

(c) When registration is revoked for any item of equipment, the grantee is responsible to take all reasonable steps to ensure that purchasers and users of such equipment are notified of such revocation and are notified to discontinue use of such equipment.

(d) The grantee or its agent shall assure that any registered equipment or circuitry which is offered to a user shall be equipped with standard means of connection to the telephone network specified in subpart F of this part.

[41 FR 8049, Feb. 24, 1976, as amended at 42 FR 32244, June 24, 1977; 49 FR 1363, Jan. 11, 1984; 50 FR 48209, Nov. 22, 1985]

### § 68.220 Cross reference.

Applications for registration of terminal equipment or protective circuitry shall, in addition to the requirements of this subpart, comply with the

provisions of subpart L of part 2 of this chapter.

[42 FR 32244, June 24, 1977]

### § 68.224 Notice of non-hearing aid compatibility.

Every non-hearing aid compatible telephone offered for sale to the public on or after August 17, 1989, whether previously-registered, newly registered or refurbished shall:

(a) Contain in a conspicuous location on the surface of its packaging a statement that the telephone is not hearing aid compatible, as is defined in §§ 68.4(a)(3) and 68.316, or if offered for sale without a surrounding package, shall be affixed with a written statement that the telephone is not hearing aid-compatible, as defined in §§ 68.4(a)(3) and 68.316; and

(b) Be accompanied by instructions in accordance with § 68.218(b)(5) of the rules.

[54 FR 21431, May 18, 1989, as amended at 61 FR 42187, Aug. 14, 1996]

### § 68.226 Registration of digital systems components.

Registered terminal equipment for connection to digital services may be registered as a component of a terminal equipment system. Such terminal equipment shall be connected to digital services only in a manner consistent with the registration code contained as part of the FCC registration number. Such codes shall be determined and assigned in the administration of the registration program.

[50 FR 48209, Nov. 22, 1985]

## Subpart D—Conditions for Registration

AUTHORITY: Secs. 4, 5, 303, 48 Stat., as amended, 1066, 1068, 1082 (47 U.S.C. 154, 155, 303).

SOURCE: 45 FR 20853, Mar. 31, 1980, unless otherwise noted.

### § 68.300 Labeling requirements.

(a) Registered terminal equipment and registered protective circuitry shall have prominently displayed on an outside surface the following information in the following format:

Complies With Part 68, FCC Rules

FCC Registration Number:

Ringer Equivalence:

(b) Registered terminal equipment and registered protective circuitry shall also have the following identifying information permanently affixed to it.

(1) Grantee's name.

(2) Model number, as specified in the registration application.

(3) Serial number or date of manufacture.

(4) Country of origin of the equipment: ''Made in .'' Required if the equipment is not manufactured in the United States. (Country of origin shall be determined in accordance with 19 U.S.C. 1304 and regulations promulgated thereunder.)

(5) As used herein, *permanently affixed* means that the required nameplate data is etched, engraved, stamped, indelibly printed or otherwise permanently marked. Alternatively, the required information may be permanently marked on a nameplate of metal, plastic, or other material fastened to the enclosure by welding, riveting, or with a permanent adhesive. Such a nameplate must be able to last for the expected lifetime of the equipment and must not be readily detachable.

(6) When the device is so small or for such use that it is not practical to place the statements specified in this section on it, the information required by paragraphs (a) and (b) of this section shall be placed in a prominent location in the instruction manual or pamphlet supplied to the user. The FCC Registration Number and the Model Number shall be displayed on the device.

(c) As of April 1, 1997, all registered telephones, including cordless telephones, as defined in § 15.3(j) of this chapter, manufactured in the United States (other than for export) or imported for use in the United States, that are hearing aid compatible, as defined in § 68.316, shall have the letters ''HAC'' permanently affixed thereto. ''Permanently affixed'' shall be defined as in paragraph (b)(5) of this section. Telephones used with public mobile services or private radio services, and

secure telephones, as defined by § 68.3, are exempt from this requirement.

[62 FR 61664, Nov. 19, 1997, as amended at 64 FR 3048, Jan. 20, 1999]

### § 68.302 Environmental simulation.

Unpackaged Registered Terminal Equipment and Registered Protective Circuitry shall comply with all the rules specified in this subpart, both prior to and after the application of the mechanical and electrical stresses specified in this section, notwithstanding that certain of these stresses may result in partial or total destruction of the equipment. Both telephone line surges, Type A and Type B, shall be applied as specified in paragraphs (b) and (c) of this section. Different failure criteria apply for each surge type.

(a) *Mechanical shock.* (1) Hand-Held Items Normally Used at Head Height: 18 random drops from a height of 1.5 meters onto concrete covered with 3 millimeters asphalt tile or similar surface.

(2) Table (Desk) Top Equipment 0–5 kilograms: Six random drops from a height of 750 millimeters onto concrete covered with 3 millimeters asphalt tile or similar surface.

(3) The drop tests specified in the mechanical shock conditioning stresses shall be performed as follows: The unit should be positioned prior to release to ensure as nearly as possible that for every six drops there is one impact on each of the major surfaces and that the surface to be struck is approximately parallel to the impact surface.

(b) *Telephone Line Surge—Type A*—(1) *Metallic.* Apply two metallic voltage surges (one of each polarity) between any pair of connections on which lightning surges may occur; this includes:

(i) Tip to ring;

(ii) Tip 1 to ring 1; and

(iii) For a 4-wire connection that uses simplexed pairs for signalling, tip to ring 1 and ring to tip 1.

NOTE TO PARAGRAPH (b)(1). The surge shall have an open circuit voltage waveform in accordance with Figure 68.302(b) having a front time ($t_f$)) of 10 μs maximum and a decay time ($t_d$) of 560 μs minimum, and shall have a short circuit current waveshape in accordance with Figure 68.302(c) having a front time ($t_f$) of 10 μs (μseconds) maximum and a decay time ($t_d$) of 560 μs minimum. The peak voltage shall be at least 800 volts and the peak short circuit current shall be at least 100 amperes. Surges are applied:

(A) With the equipment in all states that can affect compliance with the requirements of this part 68. If an equipment state cannot be achieved by normal means of power, it may be achieved artificially;

(B) With equipment leads not being surged (including telephone connections, auxiliary leads, and terminals for connection to non-registered equipment) terminated in a manner that occurs in normal use;

(C) Under reasonably foreseeable disconnection of primary power sources, with primary power cords plugged and unplugged, if so configured.

(2) *Longitudinal.* Apply two longitudinal voltage surges (one of each polarity) from any pair of connections on which lightning surges may occur. This includes the tip-ring pair and the tip 1—ring 1 pair, to earth grounding connections, and to all leads intended for connection to non-registered equipment, connected together. Surges are applied as follows:

(i) With the equipment in all states that can affect compliance with the requirements of this part 68. If an equipment state cannot be achieved by normal means of power, it may be achieved artificially;

(ii) With equipment leads not being surged (including telephone connections, auxiliary leads, and terminals for connection to non-registered equipment) terminated in a manner that occurs in normal use;

(iii) Under reasonably foreseeable disconnection of primary power sources, as for example, with primary power cords plugged and unplugged.

NOTE TO PARAGRAPH (b)(2): The surge shall have an open circuit voltage waveform in accordance with Figure 68.302(b) with a front time ($t_f$) of 10 μs (μseconds) maximum and a decay time ($t_d$) of 160 μs minimum, and shall have a short circuit current waveshape in accordance with Figure 68.302(c) having a front time ($t_f$) of 10 μs (μseconds) maximum and a decay time ($t_d$) of 160 μs minimum. The peak voltage shall be at least 1500 volts and the peak short circuit current shall be at least 200 amperes.

(3) Failure Modes resulting from application of Type A telephone line surges. Regardless of operating state, equipment and circuitry are allowed to be in violation of the longitudinal balance requirements of § 68.310(b) and (c)

and, for terminal equipment connected to Local Area Data Channels, the longitudinal signal power requirements of § 68.308(f)(3), if:

(i) Such failure results from an intentional, designed failure mode that has the effect of connecting telephone or auxiliary connections with earth ground; and,

(ii) If such a failure mode state is reached, the equipment is designed so that it would become substantially and noticeably unusable by the user, or an indication is given (*e.g.*, an alarm), in order that such equipment can be immediately disconnected or repaired.

NOTE TO PARAGRAPH (b)(3)(ii): The objective of paragraph (b)(3)(ii) is to allow for safety circuitry to either open-circuit, which would cause a permanent on-hook condition, or to short-circuit to ground, as a result of an energetic lightning surge. Off-hook tests would be unwarranted if the off-hook state cannot be achieved. A short to ground has the potential for causing interference resulting from longitudinal imbalance, and therefore designs must be adopted which will cause the equipment either to be disconnected or repaired rapidly after such a state is reached, should it occur in service.

(c) *Telephone Line Surge—Type B*—(1) *Metallic.* Apply two metallic voltage surges (one of each polarity) to equipment between any pair of connections on which lightning surges may occur; this includes:

(i) Tip to ring;

(ii) Tip 1 to ring 1; and

(iii) For a 4-wire connection that uses simplexed pairs for signalling, tip to ring 1 and ring to tip 1.

NOTE TO PARAGRAPH (c)(1): The surge shall have an open circuit voltage waveform in accordance with Figure 68.302(b) having a front time ($t_f$) of 9 μs (±30%) and a decay time ($t_d$) of 720 μs (±20%) and shall have a short circuit current waveshape in accordance with Figure 68.302(c) having a front time ($t_f$) of 5 μs (±30%) and a decay time ($t_d$) of 320 μs (±20%). The peak voltage shall be at least 1000 volts and the peak short circuit current shall be at least 25 amperes. The wave shapes are based on the use of ideal components in Figure 68.302(a) with $S_2$ in Position M. Surges are applied:

(A) With the equipment in all states that can affect compliance with the requirements of this part 68. If an equipment state cannot be achieved by normal means of power, it may be achieved artificially.

(B) With equipment leads not being surged (including telephone connections, auxiliary leads, and terminals for connection to non-registered equipment) terminated in a manner that occurs in normal use.

(C) Under reasonably foreseeable disconnection of primary power sources, as for example, with primary power cords plugged and unplugged.

(2) *Longitudinal.* Apply two longitudinal voltage surges (one of each polarity) from any pair of connections on which lightning surges may occur. This includes the tip-ring pair and the tip 1—ring 1 pair to earth grounding connections and to all leads intended for connection to non-registered equipment, connected together. Surges are applied as follows:

(i) With the equipment in all states that can affect compliance with the requirements of this part 68. If an equipment state cannot be achieved by normal means of power, it may be achieved artificially.

(ii) With equipment leads not being surged (including telephone connections, auxiliary leads, and terminals for connection to non-registered equipment) terminated in a manner that occurs in normal use.

(iii) Under reasonably foreseeable disconnection of primary power sources, as for example with primary power cords plugged and unplugged.

NOTE TO PARAGRAPH (c)(2): For each output lead of the surge generator, with the other lead open, the surge shall have an open circuit voltage waveform in accordance with Figure 68.302(b) having a front time ($t_f$) of 9 μs (±30%) and a decay time ($t_d$) of 720 μs (±20%) and shall have a short circuit current waveshape in accordance with Figure 68.302(c) having a front time ($t_f$) of 5 μs (±30%) and a decay time ($t_d$) of 320 μs (±20%). The peak voltage shall be at least 1500 volts and the peak short circuit current shall be at least 37.5 amperes. The wave shapes are based on the use of ideal components in Figure 68.302)(a) with $S_2$ in Position L.

(3) *Failure Modes resulting from application of Type B telephone line surges.* Registered terminal equipment and registered protective circuitry shall be capable of withstanding the energy of Surge Type B without causing permanent opening or shorting of the interface circuit and without sustaining damage that will affect compliance with these rules.

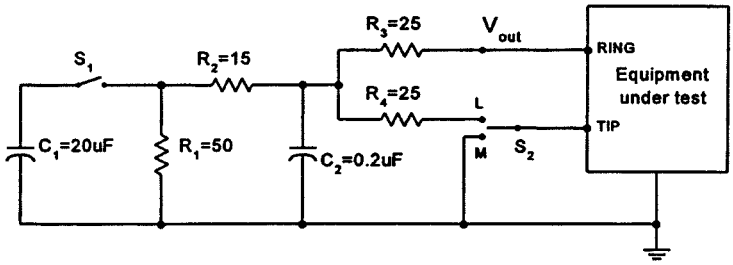


Fig. 68.302 (a) - Simplified Surge Generator

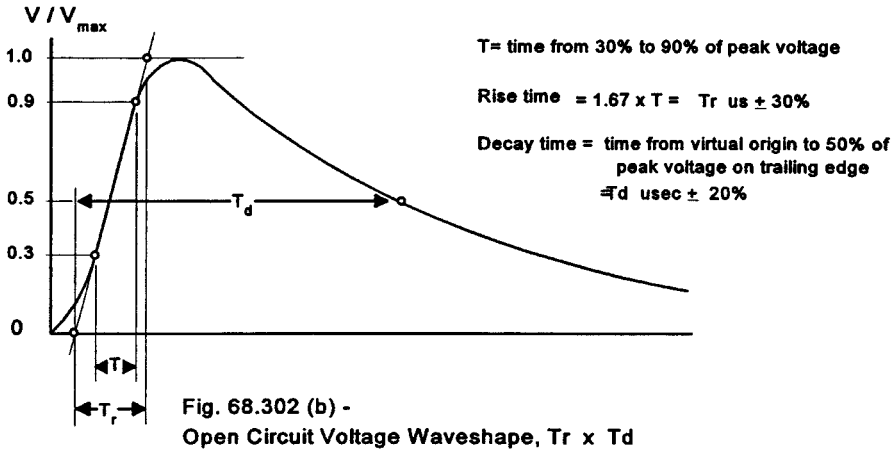


Fig. 68.302 (b) -
Open Circuit Voltage Waveshape, Tr x Td

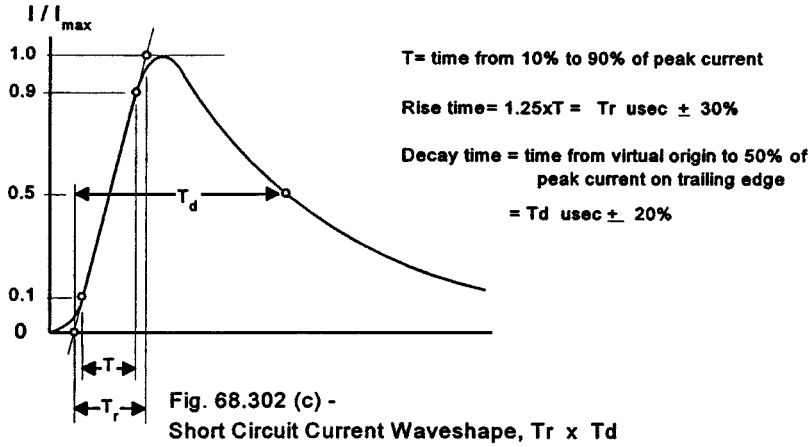


Fig. 68.302 (c) -
Short Circuit Current Waveshape, Tr x Td

(d) *Power Line Surge.* (1) Apply six power line surges (three of each polarity) between the phase and neutral terminals of the ac power line while the equipment is being powered. The surge shall have an open circuit voltage waveform in accordance with Figure 68.302(b) having a front time ($t_f$) of 2 μs

maximum and a decay time ($t_d$) of 10 μs minimum and shall have a short circuit current waveshape in accordance with Figure 68.302(c) with a front time ($t_f$) of 2 μs maximum and a decay time ($t_d$) of 10 μs minimum. The peak voltage shall be at least 2500 volts and the peak short circuit current shall be at least 1000 amperes. Surges are applied:

(i) With the equipment in all states that can affect compliance with the requirements of this part 68. If an equipment state cannot be achieved by normal means of power, it may be achieved artificially;

(ii) With equipment leads not being surged (including telephone connections, auxiliary leads, and terminals for connection to non-registered/non-certified equipment) terminated in a manner which occurs in normal use.

(2) Failure Modes resulting from application of power line surge. Registered terminal equipment and registered protective circuitry shall comply with all the criteria contained in the rules and regulations in this subpart, both prior to and after the application of the power line surge specified in paragraph (d) of this section, not withstanding that this surge may result in partial or total destruction of the equipment under test.

[62 FR 61664, Nov. 19, 1997; 63 FR 25173, May 7, 1998]

### § 68.304 Leakage current limitations.

Registered terminal equipment and registered protective circuitry shall have a voltage applied to the combination of points listed in the table below. The test voltage shall be ac of 50 or 60 Hz rms.

(a) All telephone connections;

(b) All power connections;

(c) All possible combinations of exposed conductive surfaces on the exterior of such equipment or circuitry including grounding connection points, but excluding terminals for connection to other terminal equipment;

(d) All terminals for connection to registered protective circuitry or non-registered equipment;

(e) All auxiliary lead terminals;

(f) All E&M lead terminals, and

(g) All PR, PC, CY1 and CY2 leads.

TABLE 68.304(a).—VOLTAGE APPLIED FOR VARIOUS COMBINATIONS OF ELECTRICAL CONNECTIONS

| Voltage source connected between: | ac value[1] |
|---|---|
| (a) and (b) (see NOTES 1, 2, 3) | 1500 |
| (a) and (c) (see NOTES 1, 2) | 1000 |
| (a) and (d) (see NOTES 1, 2) | 1000 |
| (a) and (e) (see NOTES 1, 2) | 1000 |
| (a) and (f) (see NOTES 1, 2) | 1000 |
| (a) and (g) (see NOTES 1, 2) | 1000 |
| (b) and (c) (see NOTE 3) | 1500 |
| (b) and (d) (see NOTE 3) | 1500 |
| (b) and (e) (see NOTE 3) | 1500 |
| (b) and (f) (see NOTE 3) | 1500 |
| (b) and (g) (see NOTE 3) | 1500 |
| (c) and (e) (see NOTES 1, 2) | 1000 |
| (c) and (f) (see NOTES 1, 2) | 1000 |
| (d) and (e) (see NOTE 2) | 1000 |
| (d) and (f) (see NOTE 2) | 1000 |
| (e) and (f) (see NOTE 2) | 1000 |

[1] Value to which test voltage is gradually increased.

NOTES TO TABLE 68.304(a): (1) Gradually increase the voltage from zero to the values listed in Table 68.304(a) over a 30-second time period, then maintain the voltage for one minute. The current in the mesh formed by the voltage source and these points shall not exceed 10 mA peak at any time during this 90-second interval.

(2) Equipment states necessary for compliance with the requirements of this section that cannot be achieved by normal means of power shall be achieved artificially by appropriate means.

(3) A telephone connection, auxiliary lead, or E&M lead that has an intentional dc conducting path to earth ground at operational voltages (such as a ground start lead), may be excluded from the leakage current test in that operational state. Leads or connections excluded for this reason shall comply with the requirements of § 68.306(e)(1).

(4) A telephone connection, auxiliary lead, or E&M lead that has an intentional dc conducting path to earth ground for protection purposes at the leakage current test voltage (such as through a surge suppressor), may have the component providing the conducting path removed from the equipment for the leakage current test in that operational state. Components removed for this reason shall comply with the requirements of § 68.306(e)(2).

(5) Filter paths, such as capacitors used in EMI filters, are left in place during leakage current testing, since these components can be a path for excessive leakage.

(6) For multi-unit equipment interconnected by cables, that is evaluated and registered as an interconnected combination or assembly, the specified 10 mA peak maximum leakage current limitation other than between power connection points and other points, may be increased as described here to

accommodate cable capacitance. The leakage current limitation may be increased to (10N+0.13L) mA peak where L is the length of interconnecting cable in the leakage path in meters and N is the number of equipment units that the combination or assembly will place in parallel across a telephone connection.

(7) RF filters and surge protectors on the line side of power supplies may be disconnected before making §68.304 leakage measurements. As an alternative to disconnecting these filters and surge protectors, this measurement may be made using a dc voltage equal to the peak ac test voltage.

[62 FR 61667, Nov. 19, 1997]

## § 68.306 Hazardous voltage limitations.

(a) *General.* Under no condition of failure of registered terminal equipment or registered protective circuitry that can be conceived to occur in the handling, operation or repair of such equipment or circuitry, shall the open circuit voltage on telephone connections exceed 70 volts peak after one second, except for voltages for network control signalling, alerting and supervision.

(1) *Type I E&M Leads.* Registered terminal equipment shall comply with the following requirements for terminal equipment on the ''A'' or ''B'' side of the interface as shown in Figures 68.3(e)(i):

(i) The dc current on the E lead shall not exceed 100 mA.

(ii) The maximum dc potentials to ground shall not exceed the following when measured across a resistor of 20 kohms ±10%:

TABLE 68.306(a)—TYPE I E&M, DC POTENTIALS

| | E lead | M lead |
|---|---|---|
| TE on ''B'' side originates signals to network on E lead. | ±5 V | ±5 V. |
| TE on ''A'' side originates signals to network on M lead. | −56.5 V; no positive potential with respect to ground. | −56.5 V; no positive potential with respect to ground. |

(iii) The maximum ac potential between E&M leads and ground reference shall not exceed 5V peak.

(iv) M lead protection shall be provided so that voltages to ground do not exceed 60 volts. For relay contact implementation, a power dissipation capability of 0.5 watt shall be provided in the shunt path.

(v) If the registered terminal equipment contains an inductive component in the E lead, it must assure that the transient voltage across the contact as a result of a relay contact opening does not exceed the following voltage and duration limitations:

(A) 300 volts peak,

(B) A rate of change of one volt per microsecond, and

(C) A 60-volt level after 20 milliseconds.

(2) *Type II E&M Leads.* Registered terminal equipment shall comply with the following requirements:

(i) For terminal equipment on the ''A'' side of the interface, the dc current in the E lead shall not exceed 100 mA. The maximum ac potential between the E lead and ground shall not exceed 5 V peak.

(ii) For terminal equipment on the ''B'' side of the interface, the dc current in the SB lead shall not exceed 100 mA. The maximum ac potential between the SB lead and ground shall not exceed 5 V peak.

(iii) The maximum dc potentials to ground shall not exceed the following when measured across a resistor of 20 kohms ±10%:

TABLE 68.306(b)—TYPE II E&M, DC POTENTIALS

| | E lead | M lead | SB lead | SG lead |
|---|---|---|---|---|
| TE on ''B'' side of the interface originates signals to network on E lead. | ±5 V | ±5 V | −56.5 V; no positive potential with respect to ground. | ±5 V. |

TABLE 68.306(b)—TYPE II E&M, DC POTENTIALS—Continued

| | E lead | M lead | SB lead | SG lead |
|---|---|---|---|---|
| TE on ''A'' side of the interface originates signals to network on M lead. | −56.5 V; no positive potential with respect to ground. | ±5 V | ±5 V | ±5 V. |

(iv) The maximum ac potential to ground shall not exceed 5V peak on the following leads, from sources in the terminal equipment:

(A) M, SG and SB leads for terminal equipment on the ''A'' side of the interface.

(B) E, SG and M leads for terminal equipment on the ''B'' side of the interface.

(v) If the registered terminal equipment contains an inductive component in the (E) or (M) lead, it must assure that the transient voltage across the contact as a result of a relay contact opening does not exceed the following voltage and duration limitations:

(A) 300 volts peak,

(B) A rate of change of one volt per microsecond, and

(C) A 60-volt level after 20 milliseconds.

(3) *Off premises station voltages.* (i) Talking battery or voltages applied by the PBX (or similar systems) to all classes of OPS interface leads for supervisory purposes must be negative with respect to ground, shall not be more than −56.5 volts dc with respect to ground, and shall not have a significant ac component.[1]

(ii) Ringing signals applied by the PBX (or similar systems) to all classes of OPS interface leads shall comply with requirements in paragraph (d) of this section. Ringing voltages shall be applied between the ring conductor and ground.

(4) *Direct Inward Dialing (DID).* Voltages applied by the PBX (or similar systems) to DID interface leads for supervisory purposes must be negative with respect to ground, shall not be more than −56.5 volts dc with respect to ground, and shall not have a significant ac component.[2]

(5) *Local Area Data Channel Interfaces.* For Local Area Data Channel interfaces, during normal operating modes including terminal equipment initiated maintenance signals, registered terminal equipment shall ensure, except during the application of ringing (limitations specified in paragraph (d) of this section), with respect to telephone connections (tip, ring, tip 1, ring 1) that:

(i) Under normal operating conditions, the rms current per conductor between short-circuit conductors, including dc and ac components, does not exceed 350 milliamperes. For other than normal operating conditions, the rms current between any conductor and ground or between short-circuited conductors, including dc and ac components, may exceed 350 milliamperes for no more than 1.5 minutes;

(ii) The dc voltage between any conductor and ground does not exceed 60 volts. Under normal operating conditions it shall not be positive with respect to ground (though positive voltages up to 60 volts may be allowed during brief maintenance states);

(iii) AC voltages are less than 42.4 volts peak between any conductor and ground, (terminal equipment shall comply while other interface leads are both):

(A) Unterminated, and

(B) Individually terminated to ground); and,

(iv) Combined ac and dc voltages between any conductor and ground are less than 42.4 volt peak when the absolute value of the dc component is less than 21.2 volts, and less than (32.8 + 0.454 × Vdc) when the absolute value of the dc component is between 21.2 and 60 volts.

[1] The ac component should not exceed 5 volts peak, when not otherwise controlled by § 68.308.

[2] The ac component shall not exceed 5 volts peak, where not otherwise controlled by § 68.308.

(6) *Ringdown Voiceband Private Line and Voiceband Metallic Channel Interface.* During normal operation, registered terminal equipment for connection to ringdown voiceband private line interfaces or voiceband metallic channel interfaces shall ensure that:

(i) Ringing voltage does not exceed the voltage and current limits specified in paragraph (d) of this section, and is:

(A) Applied to the ring conductor with the tip conductor grounded for 2-wire interfaces, or

(B) Simplexed on the tip and ring conductors with ground simplexed on the tip 1 and ring 1 conductors for 4-wire interfaces.

(ii) Except during the signaling mode or for monitoring voltage, there is no significant positive dc voltage (not over +5 volts) with respect to ground:

(A) For 2-wire ports between the tip lead and ground and the ring lead and ground and

(B) For 4-wire ports between the tip lead and ground, the ring lead and ground, the tip 1 lead and ground, and the ring 1 lead and ground.

(iii) The dc current per lead, under short circuit conditions shall not exceed 140 milliamperes.

(b) *Connection of non-registered equipment to registered terminal equipment or registered protective circuitry—General.* Leads to, or any elements having a conducting path to telephone connections, auxiliary leads or E&M leads shall:

(1) Be reasonably physically separated and restrained from and be neither routed in the same cable as nor use the same connector as leads or metallic paths connecting power connections;

(2) Be reasonably physically separated and restrained from and be neither routed in the same cable as nor use adjacent pins on the same connector as metallic paths to lead to non-registered equipment, when specification details provided to the Commission, pursuant to, § 68.200(g), do not show that interface voltages are less than non-hazardous voltage source limits in paragraph (c) of this section.

(c) *Non-Hazardous Voltage Source.* A voltage source is considered a non-hazardous voltage source if it conforms with the requirements of § 68.302, § 68.304 and paragraph (b) of this section, with all connections to the source other than primary power connections treated as ''telephone connections,'' and if such source supplies voltages no greater than the following under all modes of operation and of failure:

(1) AC voltages less than 42.4 volts peak;

(2) DC voltages less than 60 volts; and

(3) Combined ac and dc voltages less than 42.4 volts peak when the absolute value of the dc component is less than 21.2 volts and less than (32.8 + 0.454 × V dc) when the absolute value of the dc component is between 21.2 and 60 volts.

(d) *Ringing Sources.* Except for class A OPS interfaces, ringing sources shall meet all of the following restrictions:

(1) *Ringing Signal Frequency.* The ringing signal shall use only frequencies whose fundamental component is equal to or below 70 Hz.

(2) *Ringing Signal Voltage.* The ringing voltage shall be less than 300 V peak-to-peak and less than 200 V peak-to-ground across a resistive termination of at least 1 megohm.

(3) *Ringing Signal Interruption Rate.* The ringing voltage shall be interrupted to create quiet intervals of at least one second (continuous) duration each separated by no more than 5 seconds. During the quiet intervals, the voltage to ground shall not exceed the voltage limits given in paragraph (a)(3)(i) of this section.

(4) *Ringing Signal Sources.* Ringing voltage sources shall comply with the following requirements:

(i) If the ringing current through a 500 ohm(s) (and greater) resistor does not exceed 100 mA peak-to-peak, neither a ring trip device nor a monitoring voltage are required.

(ii) If the ringing current through a 1500 ohm (and greater) resistor exceeds 100 mA peak-to-peak, the ringing source shall include a current-sensitive ring trip device in series with the ring lead that will trip ringing as specified in Figure 68.306(a) in accordance with the following conditions:

(A) If the ring trip device operates as specified in Figure 68.306(a) with R=500 ohm (and greater) no monitoring voltage is required;

(B) If, however, the ring trip device only operates as specified in Figure

68.306(a) with R=1500 ohm (and greater) then the ringing voltage source shall also provide a monitoring voltage between 19 V dc and 56.5 V dc, negative with respect to ground, on the tip or ring conductor.

(iii) If the ringing current through a 500-ohm (and greater) resistor exceeds 100 mA (peak-to-peak) but does not exceed 100 mA peak-to-peak with 1500-ohm (and greater) termination, the ringing voltage source shall include either a ring trip device that meets the operating characteristics specified in Figure 68.306(a) with 500-ohm (and greater) resistor, or a monitoring voltage as specified in paragraph (d)(4)(ii)(B) of this section.

NOTE TO PARAGRAPH (d)(4)(iii): If the operating characteristics specified in Figure 68.306(a) are not met with both the 500-ohm and 1500-ohm terminations, then the terminal equipment under test fails (See Table 68.306(c)).

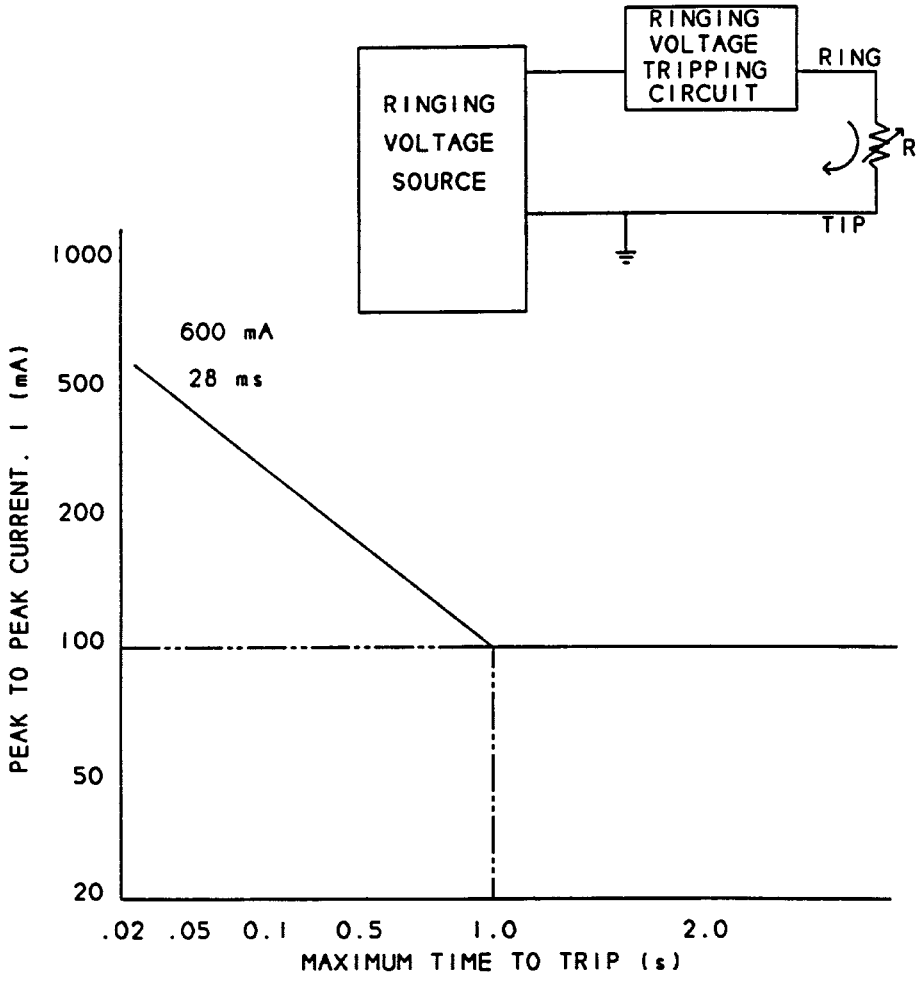


**Figure 68.306(a)**

**Illustration of Ring Trip Requirement**

TABLE 68.306(C)—SUMMARY OF RING TRIP REQUIREMENTS

| Section 68.306 (d)(4). | Ringing current (mA p.p) | | Function required | | Ring trip device operates per figure 68.306(a) |
|---|---|---|---|---|---|
| | R=500 ohms and greater | R=1500 ohms and greater | Ring trip | Monitor voltage | |
| (i) | <100 | <100 | Optional | Optional | Optional. |
| (ii)(A) | N/A | >100 | Yes | Optional | Yes for both resistances. |
| (ii)(B) | N/A | >100 | Yes | Yes | Yes for R=1500 ohms and greater. No for R=500 ohms and greater. |
| (iii) | >100 | <100 | | | |
| (1) Either Ring-Trip device or Monitor Voltage required | | | | | Yes for R=500 ohms and greater, if Ring Trip Device is used. |

(e) Intentional paths to ground (as required by §68.304). (1) Connections with operational paths to ground. Registered terminal equipment and registered protective circuitry having an intentional dc conducting path to earth ground at operational voltages that was excluded during the leakage current test of §68.304 shall have a dc current source applied between the following points:

(i) Telephone connections, including tip, ring, tip 1, ring 1, E&M leads and auxiliary leads, and

(ii) Earth grounding connections.

NOTE TO PARAGRAPHS (e)(1)(i) AND (e)(1)(ii): For each test point, gradually increase the current from zero to 1 ampere, then maintain the current for one minute. The voltage between paragraph (e)(1)(i) and paragraph (e)(1)(ii) of this section shall not exceed 0.1 volt at any time. In the event there is a component or circuit in the path to ground, the requirement shall be met between the grounded side of the component or circuit and the earth grounding connection.

(2) Connections with protection paths to ground. Registered terminal equipment and protective circuitry having an intentional dc conducting path to earth ground for protection purposes at the leakage current test voltage that was removed during the leakage current test of §68.304 shall, upon its replacement, have a 50 or 60 Hz voltage source applied between the following points:

(i) Simplexed telephone connections, including tip and ring, tip 1 and ring 1, E&M leads and auxiliary leads, and

(ii) Earth grounding connections.

NOTE to paragraphs (e)(2)(i) and (e)(2)(ii): Gradually increase the voltage from zero to 120 volts rms for registered terminal equipment, or 300 volts rms for protective circuitry, then maintain the voltage for one minute. The current between (e)(2)(i) and (e)(2)(ii) of this section shall not exceed 10 mA peak at any time. As an alternative to carrying out this test on the complete equipment or device, the test may be carried out separately on components, subassemblies, and simulated circuits, outside the unit, provided that the test results would be representative of the results of testing the complete unit.

[62 FR 61667, Nov. 19, 1997; 63 FR 25173, May 7, 1998]

## § 68.308 Signal power limitations.

(a) *General.* Limits on signal power shall be met at the interface for all 2-wire network ports and, where applicable to offered services, both transmit and receive pairs of all 4-wire network ports. Signal power measurements shall be made using terminations as specified in each of the following limitations. The transmit and receive pairs for 4-wire network ports shall be measured with the pair not under test connected to a termination equivalent to that specified for the pair under test. Through gain limitations apply only in the direction of transmission toward the network.

(b) *Voiceband metallic signal power.* (1) Limitations at the interface on internal signal sources not intended for network control signaling:

(i) The power of all signal energy, in the 200–3995 Hz voiceband, delivered by registered terminal equipment or registered protective circuitry to the appropriate loop simulator—other than non-permissive data equipment or data protective circuitry shall not exceed −9 dBm when averaged over any 3 second interval.

(ii) For 2-wire and 4-wire lossless tie trunk type interfaces, the maximum power of other than live voice signals delivered to a 600-ohm termination shall not exceed −15 dBm when averaged over any three second interval.

(iii) For OPS lines, the maximum power of other than live voice delivered to an OPS line simulator circuit shall not exceed −9 dB with respect to one milliwatt, when averaged over any 3-second interval.

(iv) For registered test equipment or registered test circuitry the maximum signal power delivered to a loop simulator circuit shall not exceed 0 dBm when averaged over any 3-second interval.

(v) For voiceband private lines using ringdown or inband signaling the maximum power of other than live voice signals delivered to a 600 ohm termination shall not exceed −13 dBm when averaged over any 3-second interval.

(vi) For voiceband private lines using inband signaling in the band 2600 ± 150 Hz, the maximum power delivered to a 600 ohm termination shall not exceed −8 dBm during the signaling mode. The maximum power delivered to a 600 ohm termination in the on-hook steady state supervisory condition shall not exceed −20 dBm. The maximum power of other than live voice signals delivered to a 600 ohm termination during the non-signaling mode and for other inband systems shall not exceed −13 dBm when averaged over any 3-second interval.

(2) Limitations on internal signal sources primarily intended for network control signaling, contained in voice and data equipment.

(i) For all operating conditions of registered terminal equipment and registered protective circuitry, the maximum power in the frequency band below 3995 Hz delivered to a loop simulator circuit shall not exceed the following when averaged over any 3-second interval:

(A) 0 dBm when used for network control (DTMF);

(B) 0 dBm when DTMF is used for manual entry end-to-end signaling. When the device is used for this purpose it shall not generate more than 40 DTMF digits per manual key stroke.

(C) −9 dBm in all other cases.

(ii) For tie trunk applications, the maximum power delivered to a 600 ohm termination for registered terminal equipment and registered protective circuitry under all operating conditions shall not exceed −4 dBm over any 3 second interval.

(3) Registered one port and multiport terminal equipment and protective circuitry with provision for through transmission from other terminal equipment, excluding data equipment and data protective circuitry that are registered in accordance with § 68.308(b)(4).

(i) Where through-transmission equipment provides a dc electrical signal to equipment connected therewith (*e.g.*, for powering of electro-acoustic transducers), dc conditions shall be provided which fall within the range of conditions provided by a loop simulator circuit unless the combination of the through-transmission equipment and equipment connected therewith is registered as a combination which conforms to paragraphs (b)(1) and (b)(2) of this section.

(ii) Through-transmission equipment to which remotely connected data terminal equipment may be connected shall not be equipped with or connected to either a Universal or Programmed Data Jack used in data configurations. (*See* paragraph (b)(4) of this section and § 68.502(e)).

(4) Registered data circuit terminal equipment shall be capable of operation in at least one of the states discussed in paragraphs (b)(1)(i), (b)(1)(ii) or (b)(1)(iii) of this section. The output power level of the data circuit terminal equipment shall not be alterable, by the customer, to levels which exceed the signal power limits specified herein.

(i) Data circuit terminal equipment intended to operate with a programming resistor for signal level control

shall not exceed the programmed levels given in Table 68.308(a).

(ii) Data circuit terminal equipment intended to operate in the fixed loss loop (FLL) state shall not transmit signal power that exceeds −4 dBm, in the 200—3995 Hz voiceband, when averaged over any and all 3 second intervals.

(iii) Data circuit terminal equipment shall not transmit signals from 200 to 3995 Hz that exceed −9 dBm, when averaged over any and all 3 second intervals.

TABLE 68.308(a)

| Programming resistor (Rp)* (ohms) | Programmed data equipment signal power output |
|---|---|
| Short | 0 dBm. |
| 150 | −1 dBm. |
| 336 | −2 dBm. |
| 569 | −3 dBm. |
| 866 | −4 dBm. |
| 1240 | −5 dBm. |
| 1780 | −6 dBm. |
| 2520 | −7 dBm. |
| 3610 | −8 dBm. |

TABLE 68.308(a)—Continued

| Programming resistor (Rp)* (ohms) | Programmed data equipment signal power output |
|---|---|
| 5490 | −9 dBm. |
| 9200 | −10 dBm. |
| 19800 | −11 dBm. |
| Open | −12 dBm. |

*Tolerance ) 1%.

(5) Registered one-port and multiport terminal equipment and protective circuitry with provision for through-transmission from ports to other equipment which is separately registered for the public switched network, or ports to other network interfaces.

(i) Registered terminal equipment and registered protective circuitry shall have no adjustments that will allow net amplification to occur in either direction of transmission in the through-transmission path within the 200–3995 Hz voiceband that will exceed the following:

TABLE 68.308(b).—ALLOWABLE NET AMPLIFICATION BETWEEN PORTS (A)(C)(D)(E)

| To | Tie trunk type ports | | | Integrated services trunk | OPS ports (2-wire) (B) | Public switched network ports (2-wire) | HCC digital PBX–CO 4-wire |
|---|---|---|---|---|---|---|---|
| From (E) | 2/4-wire | Subrate 1.544 Mbps satellite 4W | Subrate 1.544 Mbps tandem 4W | | | | |
| 2/4-Wire Tie | 0 dB | 3 dB | 3 dB | 3 dB | 6 dB | | |
| Subrate 1.544 Mbps Satellite 4W Tie. | 0 dB | | 3 dB | 3 dB | 6 dB | | |
| Subrate 1.544 Mbps Tandem 4W Tie. | −3 dB | 0 dB | 0 dB | 0 dB | 3 dB | | |
| Integrated Services Trunk. | −3 dB | 0 dB | 0 dB | 0 dB | 3 dB | | |
| RTE Digital | 0 dB | 0 dB | 0 dB | 0 dB | 3 dB | 3 dB | 0 dB. |
| RTE (B) PSTN/OPS. | −3 dB | −3 dB | −3 dB | −3 dB | 0 dB | 0 dB | −3 dB |
| OPS (B) (2-Wire) | −2 dB | 1 dB | 1 dB | 1 dB | 4 dB | 4 dB | 1 dB. |
| Public Switched Network (2-Wire). | | | | | 3 dB | 3 dB | |
| HCC Digital PBX–CO (4-Wire). | | | | | 3 dB | | |

(A) The source impedance for all measurements shall be 600 ohms. All ports shall be terminated in appropriate loop or private line channel simulator circuits or 600 ohm terminations.

(B) These ports are for 2-wire on-premises station ports to separately registered terminal equipment.

(C) These through gain limitations are applicable to multiport systems where channels are not derived by time or frequency compression methods. Terminal equipment employing such compression techniques shall assure that equivalent compensation for

through gain parameters is demonstrated in the registration application.

(D) Registered terminal equipment and registered protective circuitry may have net amplification exceeding the limitations of this subsection provided that, for each network interface type to be connected, the absolute signal power levels specified in this section are not exceeded.

(E) The indicated gain is in the direction that results when moving from the horizontal entry toward the vertical entry.

(F) Registered terminal equipment or protective circuitry with the capability for through transmission from voiceband private line channels or voiceband metallic channels to other telephone network interfaces shall ensure that the absolute signal power levels specified in this section, for each telephone network interface type to be connected, are not exceeded.

(G) Registered terminal equipment or protective circuitry with the capability for through transmission from voiceband private line channels or voiceband metallic private line channels to other telephone network interfaces shall assure, for each telephone network interface type to be connected, that signals with energy in the 2450 to 2750 Hz band are not through transmitted unless there is at least an equal amount of energy in the 800 to 2450 Hz band within 20 milliseconds of application of signal.

(ii) The insertion loss in through connection paths for any frequency in the 800 to 2450 Hz band shall not exceed the loss at any frequency in the 2450 to 2750 Hz band by more than 1 dB (maximum loss in the 800 to 2450 Hz band minus minimum loss in the 2450 to 2750 Hz band plus 1 dB).

(6) For tie trunk interfaces—Limitation on idle circuit stability parameters. For idle state operating conditions of registered terminal equipment and registered protective circuitry, the following limitations shall be met:

(i) For the two-wire interface:

$$RL \geq \begin{cases} 9 - 3\dfrac{\log(f/200)}{\log(2.5)}\ \text{dB} & ;\ \text{for } 200\ \text{Hz} \leq f \leq 500\ \text{Hz} \\ 6\ \text{dB} & ;\ \text{for } 500\ \text{Hz} \leq f \leq 3200\ \text{Hz} \end{cases}$$

(ii) For the four-wire lossless interface:

$$tl_f \geq \begin{cases} 10 - 4\dfrac{\log(f/200)}{\log(2.5)}\ \text{dB} & ;\ \text{for } 200\ \text{Hz} \leq f \leq 500\ \text{Hz} \\ 6\ \text{dB} & ;\ \text{for } 500\ \text{Hz} \leq f \leq 3200\ \text{Hz} \end{cases}$$

$$tl_r > 40\ \text{dB}$$

$$RL_i, RL_o \geq 3\ \text{dB}$$

NOTE: The following definitions apply to return loss requirements:

RL the return loss of 2-wire terminal equipment at the interface with respect to 600 ohms+2.16 μF (*i.e.*, $Z_{ref}$=600 ohms+2.16 μF).

$$RL \triangleq 20 \log_{10}\left|\frac{Z_{PBX}+Z_{ref}}{Z_{PBX}-Z_{ref}}\right|$$

$Rl_i$ the terminal equipment input (receive) port return loss with respect to 600 ohms (*i.e.*, $Z_{ref}$=600 ohms).

$$RL_i \triangleq 20 \log_{10}\left|\frac{Z_{PBX\,(input)}+Z_{ref}}{Z_{PBX\,(input)}-Z_{ref}}\right|$$

$RL_o$ the terminal equipment output (transmit) port return loss with respect to 600 ohms (*i.e.*, $Z_{ref}$=600 ohms).

$$RL_o \triangleq 20 \log_{10}\left|\frac{Z_{PBX\,(output)}+Z_{ref}}{Z_{PBX\,(output)}-Z_{ref}}\right|$$

tl the transducer loss between the receive and transmit ports of the 4-wire PBX. $tl_f$ is the transducer loss in the *forward* direction from the *receive* port to the *transmit* port of the PBX.

$$tl_f \triangleq 20 \log_{10}\left|\frac{I_i}{I_r}\right|$$

Where $I_i$ is the current sent into the *receive* port and $I_r$ is the current received at the *transmit* port terminated at 600 ohms.

$tl_r$ is the transducer loss in the *reverse* direction, from the *transmit* port to the *receive* port of the PBX.

$$tl_r \triangleq 20 \log_{10}\left|\frac{I_i}{I_r}\right|$$

Where $I_i$ is the current sent into the *transmit* port and $I_r$ is the current received at the *receive* port terminated at 600 ohms. Note, the source impedance of $I_i$ is 600 ohms.

(7) Registered terminal equipment and registered protective circuitry shall provide the following range of dc conditions to off-premises station (OPS) lines.

(i) DC voltages applied to the OPS interface for supervisory purposes and during network control signaling shall meet the limits specified in § 68.306(a)(3)(i).

(ii) DC voltages applied to the OPS interface during the talking state shall meet the following requirements:

(A) The maximum open circuit voltage across the tip (T(OPS)) and ring (R(OPS)) leads for all classes shall not exceed 56.5 volts, and

(B) Except for class A OPS interfaces, the maximum dc current into a short circuit across tip (T(OPS)) and ring (R(OPS)) leads shall not exceed 140 mA.

(C) Except for Class A OPS interfaces, the dc current into the OPS line simulator ciruit must be at least 20 mA for the following conditions (*see* Figure 68.3(f)):

| R2+RL | | |
|---|---|---|
| Condition | Class B | Class C |
| 1 | 600 | 1300 |
| 2 | 1800 | 2500 |

(8) For connections to 1.544 Mbps digital services, the permissible code words for unequipped Mu-255 encoded subrate channels are limited to those corresponding to signals of either polarity, of magnitude equal to or less than X48, where code word, XN is derived by:

XN = (255 – N) base 2
−XN = (127 – N) base 2

(c) Signal power in the 3995–4005 Hz frequency band.

(1) Power resulting from internal signal sources contained in registered protective circuitry and registered terminal equipment (voice and data), not intended for network control signaling. For all operating conditions of registered terminal equipment and registered protective circuitry that incorporate signal sources other than sources intended for network control signaling, the maximum power delivered by such sources in the 3995–4005 Hz band to an appropriate simulator circuit, shall be 18 dB below maximum permitted power specified in paragraph (b) of this section for the voiceband.

(2) Terminal equipment with provision of through-transmission from other equipment. The loss in any through-transmission path of registered terminal equipment and registered protective circuitry at any frequency in the 600 to 4000 Hz band shall not exceed, by more than 3 dB, the loss at any frequency in the 3995 to 4005 Hz band, when measured into an appropriate simulator circuit from a source

that appears as 600 ohms across tip and ring.

(d) Longitudinal voltage at frequencies below 4 kHz. The weighted rms voltage[3] averaged over 100 milliseconds that is resultant of all of the component longitudinal voltages in the 100 Hz to 4 kHz band after weighting according to the transfer function of f/4000 where f is the frequency in Hertz, shall not exceed the maximum indicated under the conditions stated in paragraph (g) of this section.

| Frequency range | Maximum weighted rms voltage | Impedance |
|---|---|---|
| 100 Hz to 4 kHz | −30 dBV | 500 ohms. |

(e) Voltage in the 4 kHz to 6 MHZ frequency range-general case—2-wire and 4-wire lossless interface (except LADC). Except as noted, rms voltage as averaged over 100 milliseconds at the telephone connections of registered terminal equipment and registered protective circuitry in all of the possible 8 kHz bands within the indicated frequency range and under the conditions specified in paragraph (g) of this section shall not exceed the maximum indicated below. For paragraphs(e)(1) and (e)(2)(i) of this section, ''f'' is the center frequency in kHz of each of the possible 8-kHz bands beginning at 8 kHz.

(1) Metallic Voltage. (i) 4 kHz to 270 kHz:

| Center frequency (f) of 8 kHz band | Max voltage in all 8 kHz bands | Metallic terminating impedance |
|---|---|---|
| 8 kHz to 12 khz | −(6.4 + 12.6 log f) dBV | 300 ohms. |
| 12 kHz to 90 kHz | (23–40 log f) dBV | 135 ohms. |
| 90 kHz to 266 kHz | −55 dBV | 135 ohms. |

(ii) 270 Khz to 6 MHz. The rms value of the metallic voltage components in the frequency range of 270 kHz to 6 MHz shall, averaged over 2 microseconds, not exceed −15 dBV. This limitation applies with a metallic termination having an impedance of 135 ohms.

(2) Longitudinal voltage.

(i) 4 kHz to 270 kHz.

| Center frequency (f) of 8 kHz band | Max voltage in all 8 kHz bands | Longitudinal terminating impedance |
|---|---|---|
| 8 kHz to 12 kHz | −(18.4 + 20 log f) dBV | 500 ohms |
| 12 kHz to 42 kHz | (3 −40 log f) dBV | 90 ohms |
| 42 kHz to 266 kHz | −62 dBV 90 | ohms |

(ii) 270 kHz to 6 MHZ. The rms value of the longitudinal voltage components in the frequency range of 270 kHz to 6 MHZ, shall not exceed −30 dBV. This limitation applies with a longitudinal termination having an impedance of 90 ohms.

(f) *LADC interface.* The metallic voltage shall comply with the general requirements in paragraph (f)(1) of this section as well as the additional requirements specified in paragraphs (f)(2) and (f)(3) of this section. The requirements apply under the conditions specified in paragraph (g) of this section. Terminal equipment for which the magnitude of the source and/or terminating impedance exceeds 300 ohms, at any frequency in the range of 100 kHz to 6 MHz, at which the signal (transmitted and/or received) has significant power, shall be deemed not to comply with these requirements. A signal is considered to have ''significant power'' at a given frequency if that frequency is contained in a designated set of frequency bands that collectively have the property that the rms voltage of the signal components in those bands is at least 90% of the rms voltage

[3] Average magnitudes may be used for signals that have peak-to-rms ratios of 20 dB and less. The rms limitations must be used instead of average values if the peak-to-rms ratio of the interfering signal exceeds this value.

of the total signal. The designated set of frequency bands must be used in testing all frequencies.

(1) Metallic voltages—frequencies below 4 kHz.

(i) Weighted rms voltage in the 10 Hz to 4 kHz frequency band. The weighted rms metallic voltage in the frequency band from 10 Hz to 4 kHz, averaged over 100 milliseconds that is the resultant of all the component metallic voltages in the band after weighting according to the transfer function of f/4000 where f is the frequency in Hertz, shall not exceed the maximum indicated below under the conditions stated in paragraph (g) of this section.

| Frequency range | Maximum voltage |
|---|---|
| 10 Hz to 4 kHz | +3 dBV. |

(ii) RMS Voltage in 100 Hz bands in the frequency range 0.7 kHz to 4 kHz. The rms metallic voltage averaged over 100 milliseconds in the 100-Hz bands having center frequencies between 750 Hz and 3950 Hz shall not exceed the maximum indicated below.

| Center freq (f) of 100-Hz bands | Max voltage in all 100-Hz bands |
|---|---|
| 750 to 3950 Hz | – 6 dBV. |

(2) Metallic Voltages—frequencies above 4 kHz—LADC interface.

(i) 100-Hz bands over frequency range of 4 kHz to 270 kHz. The rms voltage as averaged over 100 milliseconds in all possible 100-Hz bands between 4 kHz and 270 kHz for the indicated range of center frequencies and under the conditions specified in paragraph (g) of this section shall not exceed the maximum indicated below:

| Center freq (f) of all 100-Hz bands | Max voltage in all 100-Hz bands |
|---|---|
| 4.05 kHz to 4.6 kHz | 0.5 dBV. |
| 4.60 kHz to 5.45 kHz | (59.2—90 log f) dBV. |
| 5.45 kHz to 59.12 kHz | (7.6—20 log f) dBV. |
| 59.12 kHz to 266.00 kHz | (43.1—40 log f) dBV. |

Where f = center frequency in kHz of each of the possible 100 Hz bands.

(ii) 8-kHz bands over frequency range of 4 kHz to 270 kHz. The rms voltage as averaged over 100 milliseconds in all of the possible 8-kHz bands between 4 kHz and 270 kHz for the indicated range of center frequencies and under the conditions specified in paragraph (g) of this section shall not exceed the maximum indicated below:

| Center freq (f) of 8-kHz bands | Max voltage in all 8-kHz bands |
|---|---|
| 8 kHz to 120 kHz | (17.6—20 log f) dBV. |
| 120 kHz to 266 kHz | (59.2—40 log f) dBV. |

Where f = center frequency in kHz of each of the possible 8-kHz bands.

(iii) RMS Voltage at frequencies above 270 kHz. The rms value of the metallic voltage components in the frequency range of 270 kHz to 6 MHZ, averaged over 2 microseconds, shall not exceed -15 dBV. This limitation applies with a metallic termination having an impedance of 135 ohms.

(iv) Peak Voltage. The total peak voltage for all frequency components in the 4 kHz to 6 MHZ band shall not exceed 4.0 volts.

(3) Longitudinal voltage. (i) Frequencies below 4 kHz. The weighted rms voltage in the frequency band from 10 Hz to 4 kHz,averaged over 100 milliseconds is the resultant of all the component longitudinal voltages in the band after weighing according to the transfer function of f/4000, where f is the frequency in Hz, shall not exceed the maximum indicated below under the conditions stated in paragraph (g) of this section.

| Frequency range | Maximum RMS voltage |
|---|---|
| 10 Hz–4 kHz | – 37 dBV. |

(ii) 4 kHz to 270 kHz.

| Ctr freq (f) of 8 kHz bands | Max voltage in all 8 kHz bands | Longitudinal terminating impedance |
|---|---|---|
| 8 to 12 kHz | – (18.4+20 log f) dBV | 500 ohms. |

| Ctr freq (f) of 8 kHz bands | Max voltage in all 8 kHz bands | Longitudinal terminating impedance |
|---|---|---|
| 12 to 42 kHz | (3–40 log f) dBV | 90 ohms |
| 42 to 266 kHz | −62 dBV | 90 ohms. |

Where f = center frequency in kHz of each of the possible 8-kHz bands.

(iii) 270 kHz to 6 MHZ. The rms value of the longitudinal voltage components in the frequency range of 270 kHz to 6 MHZ shall, averaged over 2 microseconds, not exceed −30 dBV. This limitation applies with a longitudinal termination having an impedance of 90 ohms.

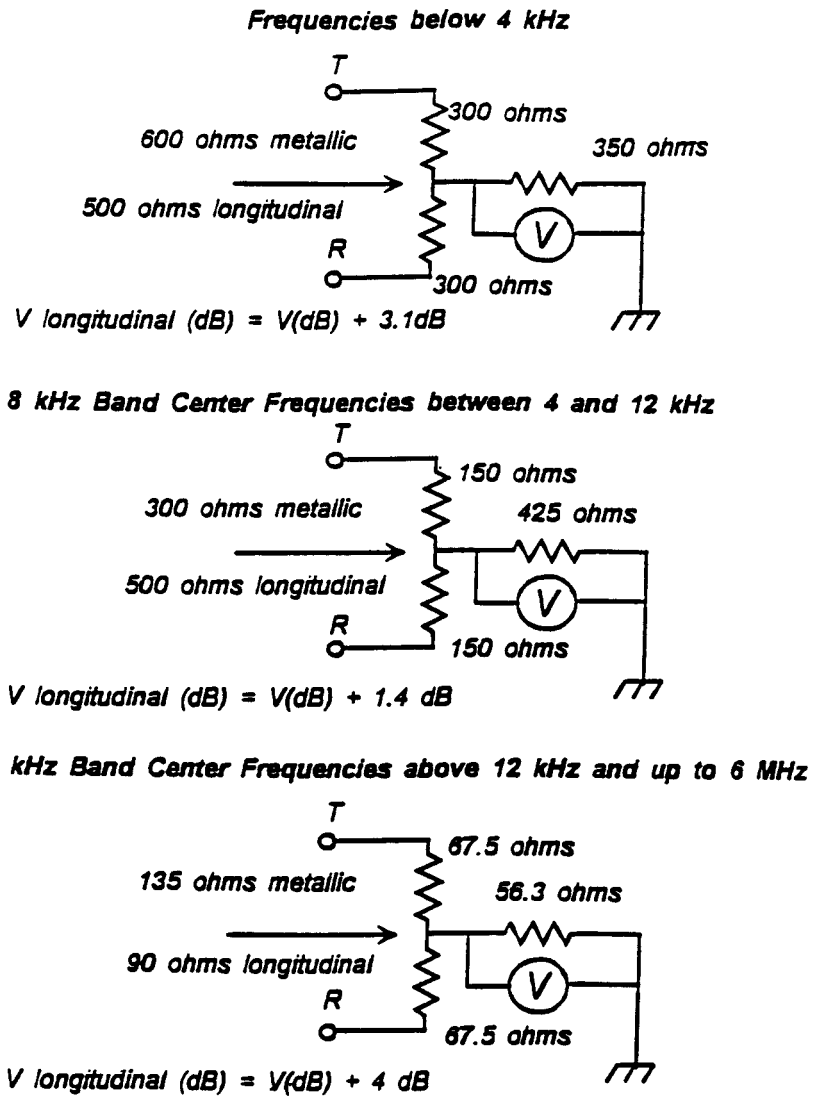


**RESISTIVE TERMINATIONS**
**METALLIC RETURN**

**Figure 68.308(a)**

(g) *Requirements in paragraphs (d), (e) and (f) of this section apply under the following conditions:* (1) All registered terminal equipment, except equipment to be used on LADC, and all registered protective circuitry must comply with the limitations when connected to a termination equivalent to the circuit

depicted in Figure 68.308(a) and when placed in all operating states of the equipment except during network control signaling. LADC registered terminal equipment must comply with the metallic voltage limitations when connected to circuits of § 68.3(i) and must comply with the longitudinal limitations when connected to circuits of Figure 68.308(a), as indicated.

(2) All registered terminal equipment and registered protective circuitry must comply with the limitations in the off-hook state over the range of loop currents that would flow with the equipment *connected* to an appropriate simulator circuit.

(3) Registered terminal equipment and registered protective circuitry with provision for through-transmission from other equipments shall comply with the limitations with a 1000 Hz tone applied from a 600-ohm source (or, if appropriate a source which reflects a 600-ohm impedance across tip and ring) at the maximum level that would be applied during normal operation. Registered protective circuitry for data shall also comply with the tone level 10 dB higher than the overload point.

(4) For registered terminal equipment or registered protective circuitry with non-registered signal source input, such as music on hold, the out of band signal power requirements shall be met using an input signal with a frequency range of 200 Hz to 20 kHz and the level set at the overload point.

(5) Except during the transmission of ringing (§ 68.306(d)) and Dual Tone Multi-frequency (DTMF) signals, LADC registered terminal equipment shall comply with all requirements in all operating states and with loop current that may be drawn for such purposes as loop back signaling. The requirements in paragraph (f)(1) of this section except in paragraphs (f)(1)(i) and (f)(1)(ii) of this section also apply during the application of ringing. The requirement in paragraph (d) and the requirements in paragraphs (f)(1)(i) and (f)(1)(ii) of this section apply during ringing for frequencies above 300 Hz and with the maximum voltage limits raised by 10 dB. DTMF signals which are used for the transmission of alphanumeric information and which comply with the requirements in paragraph (f)(1)(i) and in paragraphs (f)(2) or (f)(3) of this section as applicable, shall be deemed to comply with the requirements in paragraph (f)(1)(ii) of this section provided that, for automatically originated DTMF signals, the duty cycle is less than 50 percent.

(6) LADC registered terminal equipment shall comply with all applicable requirements, except those specified in paragraphs (f)(1) (i) and (ii) of this section, during the transmission of each possible data signal sequence of any length. For compliance with paragraph (f)(3)(i) of this section, the limitation applies to the rms voltage averaged as follows:

(i) For digital signals, baseband or modulated on a carrier, for which there are defined signal element intervals, the rms voltage is averaged over each such interval. Where multiple carriers are involved, the voltage is the power sum of the rms voltages for the signal element intervals for each carrier.

(ii) For baseband analog signals, the rms voltage is averaged over each period (cycle) of the highest frequency of the signal (3 dB point on the spectrum). For analog signals that are modulated on a carrier (whether or not the carrier is suppressed), it is averaged over each period (cycle) of the carrier. Where multiple carriers are involved, the voltage is the power sum of the rms voltage for each carrier.

(iii) For signals other than the types defined in paragraphs (g)(6)(i) and (ii) of this section, the peak amplitude of the signal must not exceed +1 dBV.

(7) Equipment shall comply with the requirements in paragraphs (f)(1)(i) and (ii) of this section, during any data sequence that may be transmitted during normal use with a probability greater than 0.001. If the sequences transmitted by the equipment are application dependent, the user instruction material shall include a statement of any limitations assumed in demonstrating compliance of the equipment.

(8) In addition to the conditions specified in paragraph (g)(5) of this section, LADC registered terminal equipment which operates in one or more modes as a receiver, shall comply with requirements in paragraph (f)(3) of this section with a tone at all frequencies

in the range of potential received signals and at the maximum power which may be received.

(h) *Interference limitations for transmission of bipolar signals over digital services.*—(1) *Limitations on Terminal Equipment Connection to Subrate Digital Services*—(i) *Pulse repetition rate.* The pulse repetition rate shall be synchronous with 2.4, 3.2, 4.8, 6.4, 9.6, 12.8, 19.2, 25.6, 38.4, 56.0, or 72 kbps per second.

(ii) *Template for maximum output pulse.* When applied to a 135 Ohm resistor, the instantaneous amplitude of the largest isolated output pulse obtainable from the registered terminal equipment shall not exceed by more than 10% the instantaneous voltage defined by a template obtained as follows: The limiting pulse template shall be determined by passing an ideal 50% duty cycle rectangular pulse with the amplitude/pulse rate characteristics defined in Table 68.308(c) through a single real pole low pass filter having a cutoff frequency in Hertz equal to 1.3 times the bit rate. For bit rates of 2.4, 3.2, 4.8, 6.4, 9.6 and 12.8 kbps, the filtered pulses shall also be passed through a filter providing the additional attenuation in Table 68.308(d).

TABLE 68.308(c)—DRIVING PULSE AMPLITUDE

| Line rate (kbps) | User data rate (R) (kbps) | Amplitude (A) (volts) |
|---|---|---|
| 2.4 | 2.4 | 1.66 |
| 3.2 | 2.4 with SC [1] | 1.66 |
| 4.8 | 4.8 | 1.66 |
| 6.4 | 4.8 with SC [1] | 1.66 |
| 9.6 | 9.6 | 0.83 |
| 12.8 | 9.6 with SC [1] | 0.83 |
| 19.2 | 19.2 | 1.66 |
| 25.6 | 19.2 with SC [1] | 1.66 |
| 38.4 | 38.4 | 1.66 |
| 51.2 | 38.4 with SC [1] | 1.66 |
| 56 | 56 | 1.66 |
| 72 | 56 with SC [1] | 1.66 |
| 72 | 64 | 1.66 |

[1] SC: Secondary Channel.

TABLE 68.308(d)—MINIMUM ADDITIONAL ATTENUATION

| Line rate (R) (kbps) | Attenuation in frequency band 24–32 kHz (dB) | Attenuation in frequency band 72–80 kHz (dB) |
|---|---|---|
| 2.4 | 5 | 1 |
| 3.2 | 5 | 1 |
| 4.8 | 13 | 9 |
| 6.4 | 13 | 9 |

TABLE 68.308(d)—MINIMUM ADDITIONAL ATTENUATION—Continued

| Line rate (R) (kbps) | Attenuation in frequency band 24–32 kHz (dB) | Attenuation in frequency band 72–80 kHz (dB) |
|---|---|---|
| 9.6 | 17 | 8 |
| 12.8 | 17 | 8 |

**Note:** The attenuation indicated may be reduced at any frequency within the band by the weighting curve of Table 68.308(e). Minimum rejection is never less than 0 dB; i.e., the weight does not justify gain over the system without added attenuation.

TABLE 68.308(e)—ATTENUATION CURVE

| 24–32 kHz band | 72–80 kHz band | Attenuation factor dB |
|---|---|---|
| 24 | 72 | −18 |
| 25 | 73 | −3 |
| 26 | 74 | −1 |
| 27 | 75 | 0 |
| 28 | 76 | 0 |
| 29 | 77 | 0 |
| 30 | 78 | −1 |
| 31 | 79 | −3 |
| 32 | 80 | −18 |

(iii) *Average power.* The average output power when a random signal sequence, (0) or (1) equiprobable in each pulse interval, is being produced as measured across a 135 ohm resistance shall not exceed 0 dBm for 9.6 and 12.8 kbps or +6 dBm for all other rates shown in Table 68.308(c).

(iv) *Encoded analog content.* If registered terminal equipment connecting to subrate services contains an analog-to-digital converter, or generates signals directly in digital form that are intended for eventual conversion into voiceband analog signals, the encoded analog content of the digital signal must be limited. The maximum equivalent power of encoded analog signals for other than live voice as derived by a zero level decoder test configuration shall not exceed −12 dBm when averaged over any 3-second time interval. The maximum equivalent power of encoded analog signals as derived by a zero level decoder test configuration for signals intended for network control signaling shall not exceed −3 dBm when averaged over any 3-second interval.

(2) *Limitations on Terminal Equipment Connecting to 1.544 Mbps Digital Services*—(i) *Pulse repetition rate:* The free running line rate of the transmit signal

shall be 1.544 Mbps with a tolerance of ±32 ppm., *i.e.*, ±50 bps.

(ii) *Output pulse templates.* The registered terminal equipment shall be capable of optionally delivering three sizes of output pulses. The output pulse option shall be selectable at the time of installation.

(A) *Option A output pulse.* When applied to a 100 ohm resistor, the instantaneous amplitude of the largest output pulse obtainable from the registered terminal equipment shall fall within the pulse template illustrated in Figure 68.308b). The mask may be positioned horizontally as needed to encompass the pulse, and the amplitude of the normalized mask may be uniformity scaled to encompass the pulse. The baseline of the mask shall coincide with the pulse baseline.

(B) *Option B output pulse.* When applied to a 100-ohm resistor, the instantaneous amplitude of the output from the registered terminal equipment obtained when Option B is implemented shall fall within the pulse template obtained by passing the bounding pulses permitted by Figure 68.308(b) through the following transfer function.

$$\frac{V_{out}}{V_{in}} = \frac{n_2S^2 + n_1S + n_0}{d_3S^3 + d_2S^2 + d_1S + d_0}$$

where:

$n_0=1.6049\times10^{6}$

$n_1=7.9861\times10^{-1}$

$n_2=9.2404\times10^{-8}$

$d_0=2.1612\times10^{6}$

$d_1=1.7223$

$d_2=4.575\times10^{-7}$

$d_3=3.8307\times10^{-14}$

$S=j\ 2\ \Pi\ f$

f=frequency (Hertz)

(C) *Option C output pulse.* When applied to a 100-ohm resistor, the instantaneous amplitude of the output from the registered terminal equipment obtained when Option C is implemented shall fall within the pulse template obtained by passing the pulses obtained in Option B through the transfer function in Option B a second time.

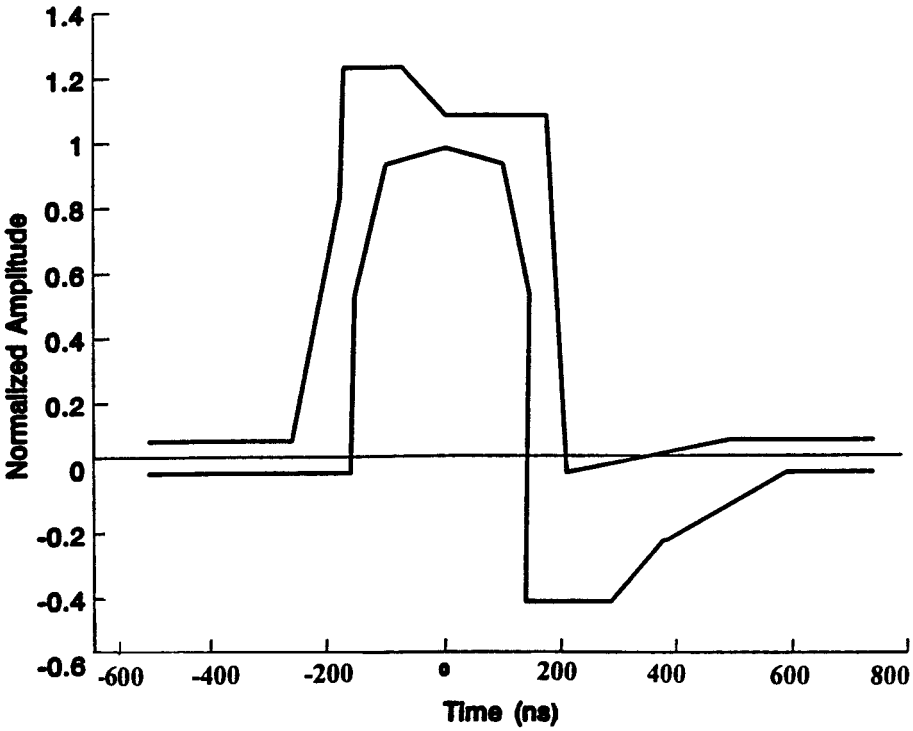


MAXIMUM CURVE

| Nano-seconds | −500 | −250 | −175 | −175 | −75 | 0 | 175 | 220 | 500 | 750 |
|---|---|---|---|---|---|---|---|---|---|---|
| Normalized Amplitude ..... | .05 | .05 | .8 | 1.2 | 1.2 | 1.05 | 1.05 | −.05 | .05 | .05 |

MINIMUM CURVE

| Nano-seconds | −500 | −150 | −150 | −100 | 0 | 100 | 150 | 150 | 300 | 396 | 600 | 750 |
|---|---|---|---|---|---|---|---|---|---|---|---|---|
| Normalized Amplitude .. | −.05 | −.05 | .5 | .9 | .95 | .9 | .5 | −.45 | −.45 | −.26 | −.05 | −.05 |

FIGURE 68.308(b) (REF. EIA/TIA 547–1989)—ISOLATED PULSE TEMPLATE AND CORNER POINTS FOR 1.544 MBPS EQUIPMENT

NOTE TO FIGURE 68.308(b) The pulse amplitude is 2.4 to 3.6 V. (Use constant scaling factor to fit normalized template.)

(iii) *Adjustment of signal voltage.* The signal voltage at the network interface must be limited so that the range of pulse amplitudes received at the first telephone company repeater is controlled to ±4 dB. This limitation is achieved by implementing the appropriate output pulse option as a function of telephone company cable loss as specified at time of installation.

| Cable loss at 772 kHz (dBV) | Terminal equipment | |
|---|---|---|
| | Output pulse | Loss at 772 kHz |
| 15 to 22 ..... | Option A ..... | 0 |
| 7.5 to 15 ..... | Option B ..... | 7.5 |
| 0 to 7.5 ..... | Option C ..... | 15 |

(iv) *Output power.* The output power in a 3 kHz band about 772 kHz when an

all ones signal sequence is being produced as measured across a 100 ohm terminating resistance shall not exceed +19 dBm. The power in a 3 kHz band about 1.544 MHz shall be at least 25 dB below that in a 3 kHz band about 772 kHz.

(v) *Encoded Analog Content.* If registered terminal equipment connected to 1.544 Mbps digital service contains an analog-to-digital converter, or generates signals directly in digital form that are intended for eventual conversion into voiceband analog signals, the encoded analog content of the subrate channels within the 1.544 Mbps signal must be limited. The maximum equivalent power of encoded analog signals for other than live voice that are not intended for network control signaling as derived by a zero level decoder test configuration shall not exceed −12 dBm when averaged over any 3-second time interval. The maximum equivalent power of encoded analog signals as derived by a zero level decoder test configuration for signals intended for network control signaling shall not exceed −3 dBm when averaged over any 3-second interval.

[62 FR 61671, Nov. 19, 1997; 63 FR 25173, 25174, May 7, 1998]

### § 68.310 Transverse balance limitations.

(a) *Technical description and application.* The Transverse Balance$_{m-1}$, coefficient is expressed as

$$\mathrm{BALANCE}_{m-1} = 20\log_{10}\frac{e_M}{e_L}$$

(1) Where $e_L$ is the longitudinal voltage produced across a longitudinal termination $Z_1$ and $e_M$ is the metallic voltage across the tip-ring or tip 1 and ring 1 interface of the input port when a voltage (at any frequency between $f_1$ and $f_2$, see Table 68.310(a) is applied from a balanced source with a metallic impedance $Z_0$ (see Table 68.310(a). The source voltage should be set such that $e_M$ = E volts (see Table 68.310(a) when a termination of $Z_0$ is substituted for the terminal equipment.

(2) The minimum transverse balance coefficient specified in this section (as appropriate) shall be equalled or exceeded for all 2-wire network ports, OPS line ports and the transmit pair (tip and ring) and receive pair (tip 1 and ring 1) of all 4-wire network ports at all values of dc loop current that the port under test is capable of drawing when attached to the appropriate loop simulator circuit (See § 68.3). An illustrative test circuit that satisfies the above conditions is shown in Figure 68.310–1(a) for analog and 68.310–1(b) for digital and subrate; other means may be used to determine the transverse balance coefficient specified herein, provided that adequate documentation of the appropriateness, precision, and accuracy of the alternative means is provided by the applicant.

(3) The minimum transverse balance requirements specified below shall be equalled or exceeded under all reasonable conditions of the application of earth ground to the equipment or protective circuitry under test.

TABLE 68.310(a)

| | Analog voiceband | Subrate digital | 1.544 Mbps digital |
|---|---|---|---|
| Longitudinal Termination—$Z_1$ | 500 ohms | See Table 310(b) | 90 ohms. |
| Metallic Source Impedance—$Z_0$ | 600 ohms | 135 ohms | 100 ohms. |
| Lower Frequency—$f_1$ | 200 Hz | 200 Hz | 10 kHz. |
| Upper Frequency—$f_2$ | 4 kHz | ([1]) | 1.544 MHz. |
| Metallic Voltage for Test—E | 0.775 V | 0.367 V | 0.316 V. |

[1] The upper frequency equals the digital line rate for the subrate service under test (See Table 68.310(b)).

(b) *Analog voiceband equipment.* All registered analog voiceband equipment shall be tested in the off-hook state. The minimum transverse balance requirement in the off-hook state shall be 40 dB, throughout the range of frequencies specified in Table 68.310(a). For some categories of equipment, additional requirements also apply to the

on-hook state. When both off-hook and on-hook requirements apply, they are:

| State | Frequency (f) | Balance |
|---|---|---|
| Off-hook ..... | 200 Hz≦f≦4000 Hz ..... | ≥40 dB. |
| On-hook ..... | 200 Hz≦f≦1000 Hz ..... | ≥60 dB. |
| On-hook ..... | 1000 Hz≦f≦4000 Hz ..... | ≥40 dB. |

(1) For analog one-port 2-wire terminal equipment with loop-start, ringdown, or inband signaling or for voiceband metallic channel applications, both off-hook and on-hook requirements apply.

(2) For analog one port equipment with ground-start and reverse-battery signaling only off-hook requirements apply.

(3) For analog registered protective circuitry for 2-wire applications with loop-start, ringdown, or inband signaling; or for voiceband metallic channel applications, both off-hook and on-hook requirements apply. Criteria shall be met with either terminal of the interface to other equipment connected to earth ground. The interface to other equipment shall be terminated in an impedance that will be reflected to the telephone connection as 600 Ohms in the off-hook state of the registered protective circuit, and the interface should not be terminated in the on-hook state. Figure 68.310(f) shows the interface of the protective circuitry being tested and the required arrangement at the interface to other equipment.

(4) For analog registered protective circuitry with ground-start and reverse-battery signaling only off-hook requirements apply. Criteria shall be met with either terminal of the interface to other equipment connected to earth ground. The interface to other equipment shall be terminated in an impedance that will be reflected to the telephone connection as 600 ohms in the off-hook state of the registered protective circuit. Figure 68.310(f) shows the interface of the protective circuitry under test and the required arrangement at the interface to the other equipment.

(5) For analog multi-port equipment with loop-start signaling both off-hook and on-hook requirements apply. Criteria shall be satisfied for all ports when all the ports not under test are terminated in their appropriate networks, as will be identified below, and when interface connections other than the ports are terminated in circuits appropriate to that interface. The minimum transverse balance coefficients shall also be satisfied for all values of dc loop current that the registered equipment is capable of drawing through each of its ports when these ports are attached to the loop simulator circuit specified in these rules. The termination for all ports other than the particular one whose transverse balance coefficient is being measured shall have a metallic impedance of 600 ohms and a longitudinal impedance of 500 ohms. Figure 68.310(c) shows this termination.

(6) For analog multi-port equipment with ground-start and reverse-battery signaling, only off-hook requirements apply. Criteria shall be satisfied for all ports when all ports not under test are terminated in their appropriate networks as will be identified below, and when interface connections other than the ports are terminated in circuits appropriate to that interface. The minimum transverse balance coefficients shall be satisfied for all values of dc loop current that the registered equipment is capable of drawing through each of its ports when these ports are attached to the loop simulator circuit specified in these rules. The terminations for all ports other than the particular one whose transverse balance coefficient is being measured shall have a metallic impedance of 600 ohms and a longitudinal impedance of 500 ohms. Figure 68.310(c) shows this termination and a longitudinal impedance of 500 ohms. Figure 68.310(c) shows this termination.

(7) For analog registered terminal equipment and protective circuitry for 4-wire network ports, both the off-hook and on-hook requirements apply. The pair not under test shall be terminated in a metallic impedance of 600 ohms. Other conditions are as follows:

(i) For analog registered protective circuitry with loop-start, ground-start, reverse battery, ringdown, or inband signaling; or for voiceband metallic channel applications. Criteria shall be met with either terminal of the interface to other equipment connected to earth ground. The interface to other

equipment shall be terminated in an impedance that will result in 600 ohms at each of the transmit and receive pairs of the 4-wire telephone connection in the off-hook state of the registered protective circuit, and the interface should not be terminated in the on-hook state. Figure 68.310(d) shows the interface of the protective circuitry being tested and the required arrangement at the interface to other equipment.

(ii) For analog multiport equipment with loop start, ground start, and reverse battery, ringdown, or inband signaling; or for voiceband metallic channel applications. Criteria shall be satisfied for all network ports when all the ports not under test are terminated as defined below, and when interface connections other than the network ports are terminated in circuits appropriate to the interface. The criteria shall also be satisfied for all values of dc loop current that when the port is connected to the appropriate 4-wire loop simulator circuit. The terminations for both pairs of all network ports not under test shall have a metallic impedance of 600 ohms and a longitudinal impedance of 500 ohms. Figure 68.310(c) shows this termination.

(8) For analog PBX equipment (or similar systems) with class B or class C off-premises interfaces, only off-hook requirements apply. Criteria shall be satisfied for all off-premises station interface ports when these ports are terminated in their appropriate networks for their off-hook state, and when all other interface connections are terminated in circuits appropriate to that interface. The minimum transverse balance coefficients shall also be satisfied for all values of dc loop current that the registered PBX is capable of providing through off-premises station ports when these ports are attached to the off-premises line simulator circuit specified in these rules.

(9) For Type Z equipment with loop-start signaling, both off-hook and on-hook requirements apply. Equipment that has on-hook impedance characteristics which that do not conform to the requirements of § 68.312 (*e.g.*, Type Z), shall comply with minimum transverse balance requirements of 40 dB in the voiceband. *See* § 68.312(h) for conditions upon registration of ''Type Z'' equipment.

(c) *Digital equipment.* The minimum transverse balance requirements for registered terminal equipment connected to digital services shall be equalled or exceeded for the range of frequencies applicable for the equipment under test and under all reasonable conditions of the application of earth ground to the equipment. All such terminal equipment shall have a transverse balance in the acceptable region of Figure 68.310(e) for the range of frequencies shown in Table 68.310(b) for the specified digital service in question. The metallic impedance used for the transverse balance measurements for all subrate services shall be 135 ohms and for 1.544 Mbps shall be 100 ohms. The longitudinal termination for 1.544 Mbps and subrate services shall be as defined in Table 68.310(b).

TABLE 68.310(b)—FREQUENCY RANGES OF TRANSVERSE BALANCE REQUIREMENTS FOR DIGITAL SERVICES

| Digital service | Frequency range | Longitudinal termination (ohms) | Metallic termination (ohms) |
|---|---|---|---|
| 2.4 | 200 to 2.4 kHz | 500 | 135 |
| 3.2 | 200 to 3.2 kHz | 500 | 135 |
| 4.8 | 200 to 4.8 kHz | 500 | 135 |
| 6.4 | 200 to 6.4 kHz | 500 | 135 |
| 9.6 | 200 to 9.6 kHz | 500 | 135 |
| 12.8[1] | 200 to 12.8 kHz | 500/90 | 135 |
| 19.2[1] | 200 to 19.2 kHz | 500/90 | 135 |
| 25.6[1] | 200 to 25.6 kHz | 500/90 | 135 |
| 38.4[1] | 200 to 38.4 kHz | 500/90 | 135 |
| 56[1] | 200 to 56 kHz | 500/90 | 135 |
| 72[1] | 200 to 72 kHz | 500/90 | 135 |
| 1.544 | 10 kHz to 1.544 MHz | 90 | 100 |

[1] For 200 to 12 kHz the longitudinal termination shall be 500 ohms and above 12 kHz the longitudinal termination shall be 90 ohms.

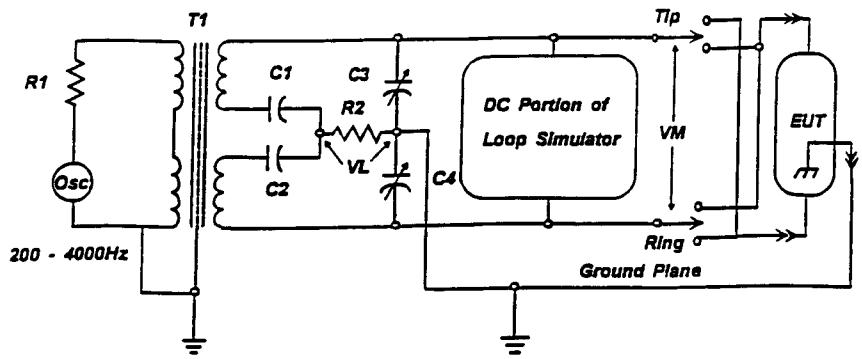


**Figure 68.310-1(a)**
**Illustrative Test Circuit for Transverse Balance (Analog)**

$T_1$ 600 ohms:600 ohms split audio transformer
$C_1$, $C_2$ 8 mF, 400 V dc, matched to within 0.1 %
$C_3$, $C_4$ 100 to 500 pF adjustable trimmer capacitors
Osc. Audio oscillator with source resistance $R_1$ less than or equal to 600 ohms
$R_1$ Selected such that $Z_{osc} + R_1 = 600$ ohms
$R_2$ 500 ohms

NOTES:
1. $V_M$ should not be measured at the same time as $V_L$
2. Use trimmer capacitors $C_3$ and $C_4$ to balance the test circuit to 20 dB greater balance than the equipment standard for all frequencies specified, with a 600 ohm resistor substituted for the equipment under test.
3. Exposed conductive surfaces on the exterior of the equipment under test should be connected to the ground plane for this test.
4. When the Terminal Equipment makes provision for an external connection to ground (G), the Terminal Equipment shall be connected to ground. When the Terminal Equipment makes no provision for an external ground, the Terminal Equipment shall be placed on a ground plane which is connected to ground and has overall dimensions at least 50 % greater than the corresponding dimensions of the Terminal Equipment. The Terminal Equipment shall be centrally located on the ground plane without any additional connection to ground.

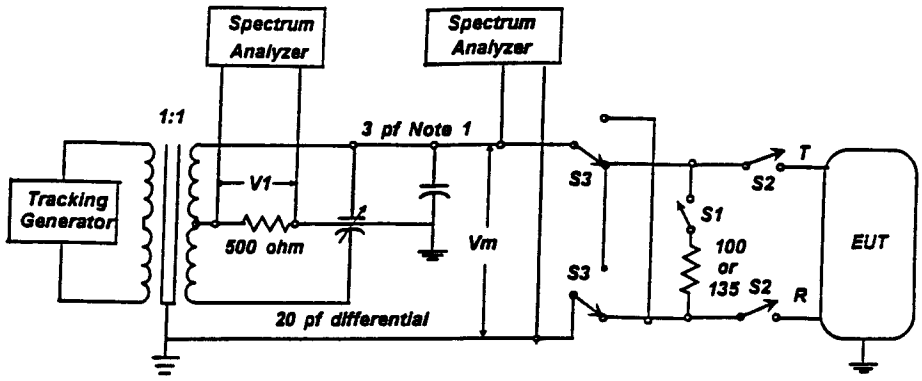


*Notes:*

1. The 3 pF capacitor may be placed on either line of the test set, as required, to obtain proper balancing of the bridge.
2. Use an $R_{CAL}$ value of 100 ohms for 1.544 Mbps devices and 135 ohms for subrate devices.
3. The effective output impedance of the tracking generator should match the appropriate test impedance. See Note 2.The spectrum analyzer's input must be differentially balanced to measure $V_m$.
4. $R_2$ should be chosen according to Table 68.310(b).

$T_1$: 100 ohms:100 ohms C.T. wide band transformer
12.4 to 24.5 pF differential trimmer
$R_2$ = $Z_i$ from Table 68.310(a)
$R_{CAL}$ $Z_0$ from Table 68.310(a)
$R_1$- Selected so that $R_1$ + 50 ohms = $Z_0$ from Table 68.310(a)

**Figure 68.310-1(b)**
**Illustrative Test Circuit for Transverse Balance (Digital)**

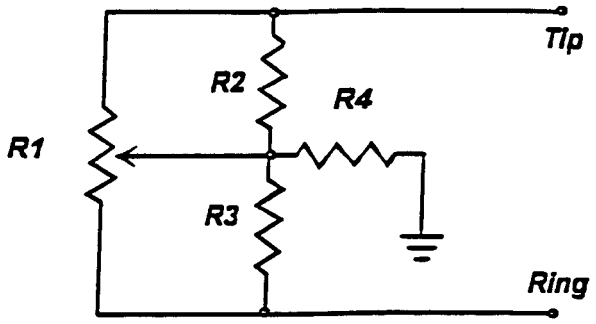


Where: $R_2 = R_3 = 300$ ohms, $R_4 = 350$ ohms, $R_1 = 300$ k ohms, for analog voiceband

$R_2 = R_3 = 67.5$ ohms, $R_4 = 56.3$ ohms, $R_1 = 100$ kohms, for subrate digital

$R_2 = R_3 = 50$ ohms, $R_4 = 65$ ohms, $R_1 = 100$ k ohms, for 1.544 Mbps

$R_1$ is used to adjust termination balance. Balance of this termination shall be adjusted to at least 60 dB between 200 and 1000 Hz, and at least 40 dB between 1000 and 4000 Hz, and to at least 35 dB at 1.544 MHZ.

**Figure 68.310(C)**
**Off-Hook Termination of Multiport Equipment for Ports Not under Test**

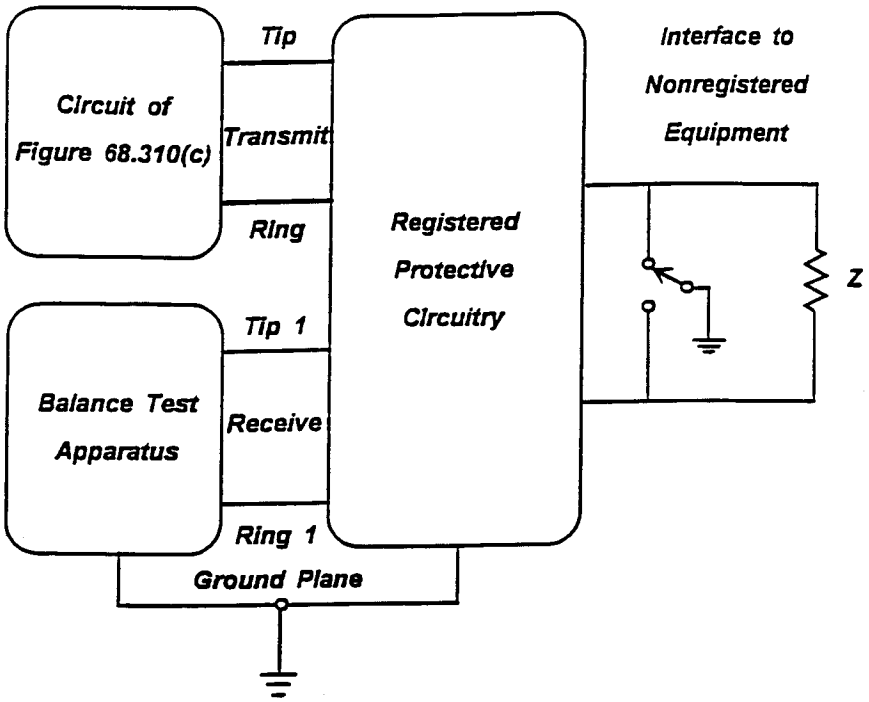


*Z* *Selected so that the reflected impedance at tip 1 and ring 1 is 600 Ω, 135 Ω, or 100 Ω depending on service type of EUT.*

*Configuration shown is for measurement of receive pair.*

***Figure 68.310(d)***
***Required Termination for Connections to Non-Registered Equipment***

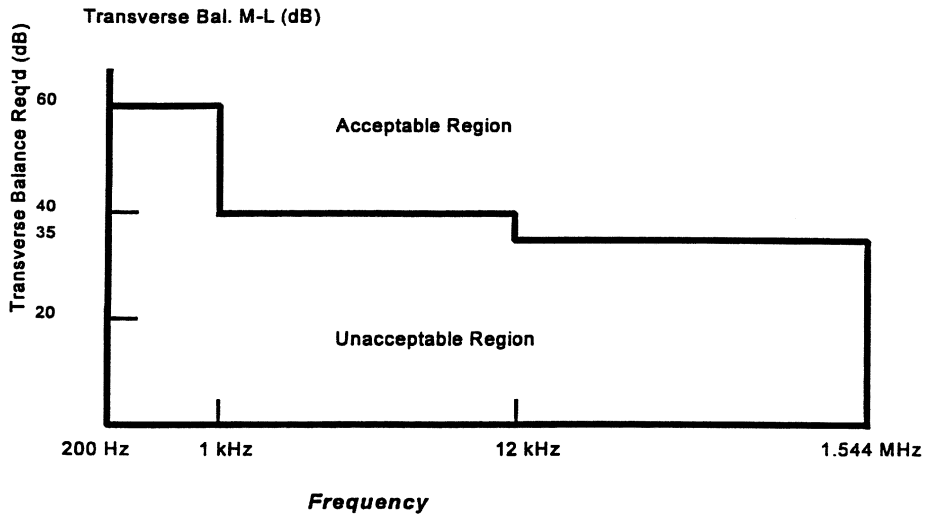


**Figure 68.310(e)**
**Transverse Balance Requirements for Digital Services**

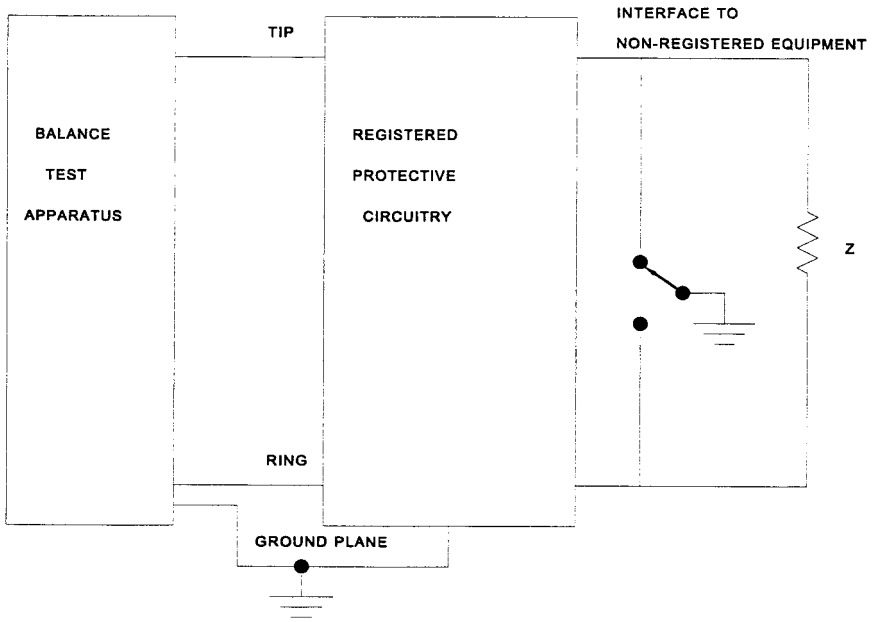


Z - Selected so that the reflected impedance at tip and ring is 600 Ω, 135 Ω, or 100 Ω depending on the service type of EUT

**FIGURE 68.310 (f)**
**REQUIRED TERMINATION FOR CONNECTIONS TO NON-REGISTERED EQUIPMENT**

[62 FR 61682, Nov. 19, 1997; 63 FR 25174, 25175 May 7, 1998]

### § 68.312 On-hook impedance limitations.

(a) *General.* Requirements in this section apply to the tip and ring conductors of 2-wire interfaces. These requirements also apply to 4-wire loop-start or ground-start interfaces, in the following configuration:

(1) The tip and ring conductors are connected together and treated as one of the conductors of a tip and ring pair.

(2) The tip 1 and ring 1 conductors are connected together and treated as the other conductor of a tip and ring pair.

NOTE TO § 68.312: Throughout this section, references will be made to simulated ringing. Ringing voltages to be used and impedance limitations associated with simulated ringing are shown in Table 68.312(a).

TABLE 68.312(a)

| Ringing type | Range of compatible ringing frequencies (Hz) | Simulated ringing voltage superimposed on 56.5 volts dc | Impedance limitations (ohms) |
|---|---|---|---|
| A | 20±3 | 40 to 130 volts rms | 1400 |
| | 30±3 | 40 to 130 volts rms | 1000 |
| B | 15.3 to 34 | 40 to 130 volts rms | 1600 |
| | >34 to 49 | 62 to 130 volts rms | 1600 |

TABLE 68.312(a)—Continued

| Ringing type | Range of compatible ringing frequencies (Hz) | Simulated ringing voltage superimposed on 56.5 volts dc | Impedance limitations (ohms) |
|---|---|---|---|
| | >49 to 68 | 62 to 150 volts rms | 1600 |

(b) *Limitations on individual equipment intended for operation on loop-start telephone facilities.* Registered terminal equipment and registered protective circuitry shall conform to the following limitations:

(1) *On-hook resistance, metallic and longitudinal (up to 100 Vdc).* The on-hook dc resistance between the tip and ring conductors of a loop start interface, and between each of the tip and ring conductors and earth ground, shall be greater than 5 megohms for all dc voltages up to and including 100 volts.

(2) *On-hook resistance, metallic and longitudinal (100 V to 200 Vdc).* The on-hook dc resistance between tip and ring conductors of a loop start interface, and between each of the tip and ring conductors and earth ground shall be greater than 30 kOhms for all dc voltages between 100 and 200 volts.

(3) *DC current during ringing.* During the application of simulated ringing, as listed in Table 68.312(a), to a loop start interface, the total dc current shall not exceed 3.0 milliamperes. The equipment must comply for each ringing type which is listed as part of the ringer equivalence.

(4) *Ringing frequency impedance (metallic).* During the application of simulated ringing, as listed in Table 68.312(a), to a loop start interface, the impedance between the tip and ring conductors (defined as the quotient of applied ac voltage divided by resulting true rms current) shall be greater than or equal to the value specified in Table 68.312(a). The equipment must comply for each ringing type which is listed as part of the ringer equivalence.

(5) *Ringing Frequency Impedance (longitudinal).* During the application of simulated ringing, as listed in Table 68.312(a), to a loop start interface, the impedance between each of the tip and ring conductors and ground shall be greater than 100 kohms. The equipment must comply with each ringing type listed in the ringer equivalence.

(c) *Limitations on individual equipment intended for operation on ground start telephone facilities.* Registered terminal equipment and registered protective circuitry shall conform to the following limitations:

(1) *DC current during ringing.* During the application of simulated ringing, as listed in Table 68.312(a), to a ground start interface, the total dc current flowing between tip and ring conductors shall not exceed 3.0 milliamperes. The equipment must comply for each ringing type listed as part of the ringer equivalence.

(2) *Ringing frequency impedance (metallic).* During the application of simulated ringing, as listed in Table 68.312(a), to a ground start interface, the total impedance of the parallel combination of the ac impedance across tip and ring conductors and the ac impedance from the ring conductor to ground (with ground on the tip conductor) shall be greater than the value specified in Table 68.312(a). The equipment must comply for each ringing type listed as part of the ringer equivalence.

(d) *Ringer Equivalence Definition.* The ringer equivalence number is defined to be the value determined in paragraphs (d)(1) or (d)(2) of this section, as appropriate, followed by the ringer type letter indicator representing the frequency range for which the number is valid. If Ringer Equivalence is to be stated for more than one Ringing Type, testing shall be performed at each frequency range to which Ringer Equivalence is to be determined in accordance with the above, and the largest resulting Ringer Equivalence Number so determined will be associated with each Ringing Type letter designation for which it is valid.

(1) For individual equipment intended for operation on loop-start telephone facilities, the ringer equivalence is five times the impedance limitation listed in Table 68.312(a), divided by the

minimum measured ac impedance, as defined in paragraph (b)(1)(iv) of this section, during the application of simulated ringing as listed in Table 68.312(a).

(2) For individual equipment intended for operation on ground-start telephone facilities, the ringer equivalence is five times the impedance limitation listed in Table 68.312(a), divided by the minimum measured ac impedance, defined in paragraph (c)(2) of this section, during the application of simulated ringing as listed in Table 68.312(a).

(e) *Ringer equivalence number labeling.* Registered terminal equipment and registered protective circuitry shall have at least one Ringer Equivalence Number shown on the registration label. Where options that will vary the Ringer Equivalence are involved, either each option that results in a Ringer Equivalence Number greater than 0.1 and its corresponding Ringer Equivalence shall be listed on the registration label, or the largest Ringer Equivalence Number that can result from such options shall be stated on the label. A trained, authorized agent of the Grantee may disconnect ringers, bridge ringers to another line, or execute options affecting Ringer Equivalence after the telephone company has been notified in accordance with § 68.106.

(f) *Maximum ringer equivalence.* All registered terminal equipment and registered protective circuitry that can affect the ringing frequency impedance shall be assigned a Ringer Equivalence. The sum of all such Ringer Equivalences on a given telephone line or loop shall not exceed 5. In some cases, a system that has a total Ringer Equivalence of 5 or less may not be usable on a given telephone line or loop.

(g) *OPS interfaces for PBX with DID (Ring trip requirement).* PBX ringing supplies whose output appears on the off-premises interface leads shall not trip when connected to the following tip-to-ring impedance that terminates the off-premises station loop: A terminating impedance composed of the parallel combination of a 15 kohms resistor and an RC series circuit (resistor and capacitor) whose ac impedance is as specified in Table 68.312(b) below.

TABLE 68.312(b)

| Ringing freq Hz | ac impedance ohms | |
|---|---|---|
| | Class B or C | Class A |
| 20 ± 3 | 7000/N | 1400 |
| 30 ± 3 | 5000/N | 1000 |

N—Number of ringer equivalences, as specified by the manufacturer, which can be connected to the off-premises station loop.

(h) *Type Z Ringers.* Equipment that has on-hook impedance characteristics which do not conform to the requirements of this section may be conditionally registered, notwithstanding the requirements of this section, provided that it is labeled with a Ringing Type designation ''Z''. It should be noted that registration of equipment bearing the designation ''Z'' does not necessarily confer any right of connection to the telephone network under these rules. Any equipment registered with the type Z designation may only be used with the consent of the local telephone company, provided that the local telephone company does not discriminate in its treatment of equipment bearing the type Z designation.

(i) *Transitioning to the Off-Hook State.* Registered terminal equipment and registered protective circuitry shall not by design leave the on-hook state by operations performed on tip and ring leads for any other purpose than to request service or answer an incoming call, except that terminal equipment that the user places in the off-hook state for the purpose of manually placing telephone numbers in internal memory for subsequent automatic or repertory dialing shall be registerable. Make-busy indications shall be transmitted by the use of make-busy leads only as defined in § 68.3 and § 68.200(j).

[62 FR 61689, Nov. 19, 1997]

## § 68.314 Billing protection.

(a) *Call duration requirements on data equipment connected to the public switched network, or to tie trunks, or to private lines that access the public switched network.* Registered data terminal equipment and registered protective circuitry shall comply with the following requirements when answering an incoming call, except in off-hook states in which the signals are

transmitted and/or received by electroacoustic transducers only.

NOTE TO PARAGRAPH (a) OF THIS SECTION: This paragraph is applicable to terminal equipment and registered protective circuitry employed with digital services where such digital services are interconnected with the analog telephone network.

(1) *Registered protective circuitry*. Registered protective circuitry connected to associated data equipment shall assure that the following signal power limitations are met for at least the first 2 seconds after the off-hook condition is presented to the telephone network in response to an incoming call:

(i) Signals that appear at the protective circuitry/telephone network interface for delivery to the telephone network shall be limited to -55 dBm, (at any frequency in the range of 200 to 3200 Hertz), as such signals are delivered into a loop simulator circuit or a 600 ohm termination, as appropriate; and

(ii) Signals that appear at the protective circuitry-associated data equipment interface for delivery to associated data equipment shall be limited as follows: for any received signal power (appearing at the protective circuitry-telephone network interface) up to 0 dB with respect to one milliwatt (at any frequency in the range of 200 to 3200 Hertz), the power of signals delivered to associated data equipment shall be no greater than the signal power that would be delivered as a result of received signal power of -55 dBm.

(2) *Registered terminal equipment*. Registered terminal equipment for data applications shall assure that, when an incoming telephone call is answered, the answering terminal equipment prevents both transmission and reception of data for at least the first two seconds after the answering terminal equipment transfers to the off-hook condition. For the purpose of this requirement, a fixed sequence of signals that is transmitted (and originated within) and/or received by the registered terminal equipment each time it answers an incoming call shall not be considered data, provided that such signals are for one or more of the following purposes:

(i) Disabling echo control devices,

(ii) Adjusting automatic equalizers and gain controls,

(iii) Establishing synchronization, or

(iv) Signaling the presence and if required, the mode of operation, of the data terminal at the remote end of a connection.

(b) *Voice and data equipment on-hook signal requirements for equipment connected to the public switched network, or to tie trunks, or to private lines that access the public switched network*. Registered protective circuitry and registered terminal equipment shall comply with the following:

(1) The power delivered into a 2-wire loop simulator circuit or into the transmit and receive pairs of a 4-wire loop simulator or into a 600 ohm termination (where appropriate) in the on-hook state, by loop-start or ground-start equipment shall not exceed −55 dBm within the voiceband. Registered protective circuitry shall also assure that for any input level up to 10 dB above the overload point, the power to a 2-wire loop simulator circuit or the transmit and receive pairs of a 4-wire loop simulator circuit or into a 600 ohm termination (where appropriate) does not exceed the above limits.

(2) The power delivered into a 2-wire loop simulator circuit or into the transmit and receive pairs of a 4-wire loop simulator circuit, in the on-hook state, by reverse battery equipment shall not exceed −55 dBm, unless the equipment is arranged to inhibit incoming signals.

(c) *Voice and data equipment loop current requirements for equipment connected to the public switched network*. The loop current through registered terminal equipment or registered protective circuitry, when connected to a 2-wire or 4-wire loop simulator circuit with the 600 ohm resistor and 500 microfarad capacitor of the 2-wire loop simulator circuit or both pairs of the 4-wire loop simulator circuit disconnected shall, for at least 5 seconds after the equipment goes to the off-hook state that would occur when answering an incoming call:

(1) Be at least as great as the current obtained in the same loop simulator circuit with minimum battery voltage and a maximum loop resistance when a 200 ohm resistance is connected across

the tip and ring of the 2-wire loop simulator circuit or connected across the tip/ring and tip 1/ring 1 conductors (tip and ring connected together and tip 1 and ring 1 connected together) of the 4-wire loop simulator circuit in place of the registered terminal equipment or registered protective circuitry; or

(2) Not decreased by more than 25 percent from its maximum value attained during this 5-second interval; unless the equipment is returned to the on-hook state during the above 5 second interval.

(3) The above requirements also apply in the hold state and any off-hook state.

(d) *Signaling interference requirements.* (1) The signal power delivered to the network interface by the registered terminal equipment and from signal sources internal to registered protective circuitry in the 2450 Hz to 2750 Hz band shall be less than or equal to the power present simultaneously in the 800 Hz to 2450 Hz band for the first 2 seconds after going to the off-hook state.

(2) Registered terminal equipment for connection to subrate or 1.544 Mbps digital services shall not deliver digital signals to the telephone network with encoded analog content energy in the 2450 to 2750 Hertz band unless at least an equal amount of encoded analog energy is present in the 800 to 2450 Hertz band for the first two seconds after going to the off-hook state.

(e) *On-hook requirements for registered terminal equipment for connection to subrate and 1.544 Mbps digital services.* Registered terminal equipment and registered protective circuitry shall comply with the following:

(1) The power delivered to the telephone network in the on-hook state as derived by a zero level decoder shall not exceed −55 dBm equivalent power for digital signals within the voiceband.

(2) Registered protective circuitry shall also assure that the power to a zero level decoder does not exceed the above limits for any input level up to 10 dB above the overload point.

(3) Reverse battery interface. The power derived by a zero level decoder, in the on-hook state, by reverse battery equipment, shall not exceed −55 dBm, unless the equipment is arranged to inhibit incoming signals.

(f) *Off hook requirements.* Off-hook signal requirements for registered terminal equipment connecting to 1.544 Mbps digital services. Upon entering the normal off-hook state, in response to alerting, for subrate channels, registered terminal equipment shall continue to transmit the signaling bit sequence representing the off-hook state for 5 seconds, unless the equipment is returned to the on-hook state during the above 5-second interval.

(g) *Operating requirements for direct inward dialing.* (1) For registered terminal equipment, the off-hook state shall be applied within 0.5 seconds of the time that:

(i) The terminal equipment permits the acceptance of further digits that may be used to route the incoming call to another destination.

(ii) The terminal equipment transmits signals towards the calling party, except for the call progress tones, *i.e.*, busy, reorder and audible ring, and the call is:

(A) Answered by the called, or another station;

(B) Answered by the attendant;

(C) Routed to a customer controlled or defined recorded announcement, except for ''number invalid,'' ''not in service'' or ''not assigned;''

(D) Routed to a dial prompt; or

(E) Routed back to the public switched telephone network or other destination and the call is answered. If the status of the answered call cannot be reliably determined by the terminal equipment through means such as, detection of answer supervision or voice energy, removal of audible ring, etc., the off-hook state shall be applied after an interval of not more than 20 seconds from the time of such routing. The off-hook state shall be maintained for the duration of the call.

(2) For registered protective circuitry:

(i) Registered protective circuitry shall block transmission incoming from the network until an off-hook signal is received from the terminal equipment.

(ii) Registered protective circuitry shall provide an off-hook signal within 0.5s following the receipt of an off-hook

signal from the terminal equipment and shall maintain this off-hook signal for the duration of the call.

[62 FR 61690, Nov. 19, 1997]

## § 68.316 Hearing aid compatibility: Technical requirements.

A telephone handset is hearing aid compatible for the purposes of this section if it complies with the following standard, published by the Telecommunications Industry Association, copyright 1983, and reproduced by permission of the Telecommunications Industry Association:

ELECTRONIC INDUSTRIES ASSOCIATION RECOMMENDED STANDARD RS–504 MAGNETIC FIELD INTENSITY CRITERIA FOR TELEPHONE COMPATIBILITY WITH HEARING AIDS

**[Prepared by EIA Engineering Committee TR–41 and the Hearing Industries Association's Standards and Technical Committee]**

TABLE OF CONTENTS

*List of Illustrations*

1 INTRODUCTION
2 SCOPE
3 DEFINITIONS
4 TECHNICAL REQUIREMENTS
4.1 General
4.2 Axial Field Intensity
4.3 Radial Field Intensity
4.4 Induced Voltage Frequency Response
Appendix A—Bibliography

*List of Illustrations*

*Figure Number*

1 Reference and Measurement Planes and Axes
2 Measurement Block Diagram
3 Probe Coil Parameters
4A Induced Voltage Frequency Response for receivers with an axial field that exceeds −19 dB
4B Induced Voltage Frequency Response for receivers with an axial field that exceeds −22 dB but is less than −19 dB

*Magnetic Field Intensity Criteria for Telephone Compatibility With Hearing Aids*

(From EIA Standards Proposal No. 1652, formulated under the cognizance of EIA TR–41 Committee on Voice Telephone Terminals and the Hearing Industries Association's Standards and Technical Committee.)

*1 Introduction*

Hearing-aid users have used magnetic coupling to enable them to participate in telephone communications since the 1940's. Magnetic pick-ups in hearing-aids have provided for coupling to many, but not all, types of telephone handsets. A major reason for incompatibility has been the lack of handset magnetic field intensity requirements. Typically, whatever field existed had been provided fortuitously rather than by design. More recently, special handset designs, e.g., blue grommet handsets associated with public telephones, have been introduced to provide hearing-aid coupling and trials were conducted to demonstrate the acceptability of such designs. It is anticipated that there will be an increase in the number of new handset designs in the future. A standard definition of the magnetic field intensity emanating from telephone handsets intended to provide hearing-aid coupling is needed so that hearing-aid manufacturers can design their product to use this field, which will be guaranteed in handsets which comply with this standard.

1.1 This standard is one of a series of technical standards on voice telephone terminal equipment prepared by EIA Engineering Committee TR–41. This document, with its companion standards on Private Branch Exchanges (PBX), Key Telephone Systems (KTS), Telephones and Environmental and Safety Considerations (Refs: A1, A2, A3 and A4) fills a recognized need in the telephone industry brought about by the increasing use in the public telephone network of equipment supplied by numerous manufacturers. It will be useful to anyone engaged in the manufacture of telephone terminal equipment and hearing-aids and to those purchasing, operating or using such equipment or devices.

1.2 This standard is intended to be a living document, subject to revision and updating as warranted by advances in network and terminal equipment technology and changes in the FCC Rules and Regulations.

*2 Scope*

2.1 The purpose of this document is to establish formal criteria defining the magnetic field intensity presented by a telephone to which hearing aids can couple. The requirements are based on present telecommunications plant characteristics at the telephone interface. The telephone will also be subject to the applicable requirements of EIA RS–470, Telephone Instruments with Loop Signaling for Voiceband Applications (Ref: A3) and the environmental requirements specified in EIA Standards Project PN–1361, Environmental and Safety Considerations for Voice Telephone Terminals, when published (Ref: A4).

Telephones which meet these requirements should ensure satisfactory service to users of magnetically coupled hearing-aids in a high percentage of installations, both initially and over some period of time, as the network

grows and changes occur in telephone serving equipment. However, due to the wide range of customer apparatus and loop plant and dependent on the environment in which the telephone and hearing aid are used, conformance with this standard does not guarantee acceptable performance or interface compatibility under all possible operating conditions.

2.2 A telephone complies with this standard if it meets the requirements in this standard when manufactured and can be expected to continue to meet these requirements when properly used and maintained. For satisfactory service a telephone needs to be capable, through the proper selection of equipment options, of satisfying the requirements applicable to its marketing area.

2.3 The standard is intended to be in conformance with part 68 of the FCC Rules and Regulations, but it is not limited to the scope of those rules (Ref: A5).

2.4 The signal level and method of measurement in this standard have been chosen to ensure reproducible results and permit comparison of evaluations. The measured magnetic field intensity will be approximately 15 dB above the average level encountered in the field and the measured high-end frequency response will be greater than that encountered in the field.

2.5 The basic accuracy and reproducibility of measurements made in accordance with this standard will depend primarily upon the accuracy of the test equipment used, the care with which the measurements are conducted, and the inherent stability of the devices under test.

### *3 Definitions*

This section contains definitions of terms needed for proper understanding and application of this standard which are not believed to be adequately treated elsewhere. A glossary of telephone terminology, which will be published as a companion volume to the series of technical standards on Telephone Terminals For Voiceband Applications, is recommended as a general reference and for definitions not covered in this section.

3.1 A telephone is a terminal instrument which permits two-way, real-time voice communication with a distant party over a network or customer premises connection. It converts real-time voice and voiceband acoustic signals into electrical signals suitable for transmission over the telephone network and converts received electrical signals into acoustic signals. A telephone which meets the requirements of this standard also generates a magnetic field to which hearing-aids may couple.

3.2 The telephone boundaries are the electrical interface with the network, PBX or KTS and the acoustic, magnetic and mechanical interfaces with the user. The telephone may also have an electrical interface with commercial power.

3.3 A hearing aid is a personal electronic amplifying device, intended to increase the loudness of sound and worn to compensate for impaired hearing. When equipped with an optional inductive pick-up coil (commonly called a telecoil), a hearing aid can be used to amplify magnetic fields such as those from telephone receivers or induction-loop systems.

3.4 The reference plane is the planar area containing points of the receiver-end of the handset which, in normal handset use, rest against the ear (see Fig 1).

3.5 The measurement plane is parallel to, and 10 mm in front of, the reference plane (see Fig 1).

3.6 The reference axis is normal to the reference plane and passes through the center of the receiver cap (or the center of the hole array, for handset types that do not have receiver caps).

3.7 The measurement axis is parallel to the reference axis but may be displaced from that axis, by a maximum of 10 mm (see Fig 1). Within this constraint, the measurement axis may be located where the axial and radial field intensity measurements, are optimum with regard to the requirements. In a handset with a centered receiver and a circularly symmetrical magnetic field, the measurement axis and the reference axis would coincide.

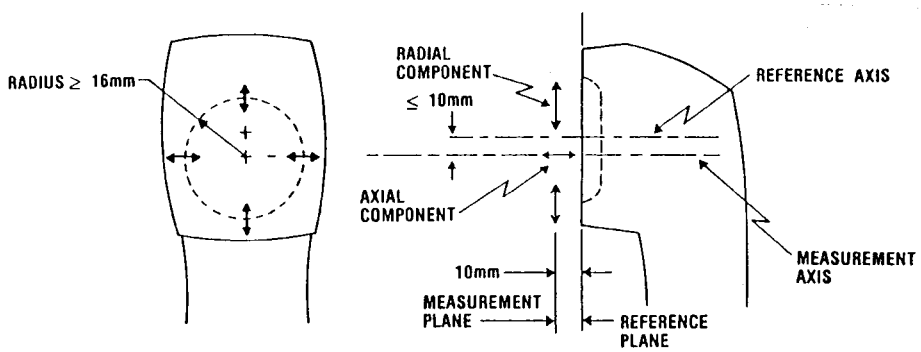


FIG 1 REFERENCE AND MEASUREMENT PLANES AND AXES

*4 Technical Requirements*

4.1 *General.*

These criteria apply to handsets when tested as a constituent part of a telephone.

4.1.1 Three parameters descriptive of the magnetic field at points in the measurement plane shall be used to ascertain adequacy for magnetic coupling. These three parameters are intensity, direction and frequency response, associated with the field vector.

4.1.2 The procedures for determining the parameter values are defined in the IEEE Standard Method For Measuring The Magnetic Field Intensity Around A Telephone Receiver (Ref: A6), with the exception that this EIA Recommended Standard does not require that the measurements be made using an equivalent loop of 2.75 km of No. 26 AWG cable, but uses a 1250–ohm resistor in series with the battery feed instead (see Fig 2).

4.1.3 When testing other than general purpose analog telephones, e.g., proprietary or digital telephones, an appropriate feed circuit and termination shall be used that produces equivalent test conditions.

4.2 *Axial Field Intensity.*

When measured as specified in 4.1.2, the axial component of the magnetic field directed along the measurement axis and located at the measurement plane, shall be greater than −22 dB relative to 1 A/m, for an input of −10 dBV at 1000 Hz (see Fig 2).

NOTE: If the magnitude of the axial component exceeds −19 dB relative to 1 A/m, some relaxation in the frequency response is permitted (See 4.4.1).

4.3 *Radial Field Intensity.*

When measured as specified in 4.1.2, radial components of the magnetic field as measured at four points 90° apart, and at a distance ≥16 mm from the measurement axis (as selected in 4.2), shall be greater than −27 dB relative to 1 A/m, for an input of −10 dBV at 1000 Hz (see Fig 2).

4.4 *Induced Voltage Frequency Response.*

The frequency response of the voltage induced in the probe coil by the axial component of the magnetic field as measured in 4.2, shall fall within the acceptable region of Fig 4A or Fig 4B (see 4.4.1 and 4.4.2), over the frequency range 300-to-3300 Hz.

4.4.1 For receivers with an axial component which exceeds −19 dB relative to 1 A/m, when measured as specified in 4.1.2, the frequency response shall fall within the acceptable region of Fig 4A.

4.4.2 For receivers with an axial component which is less than −19 dB but greater than −22 dB relative to 1 A/m, when measured as specified in 4.1.2, the frequency response shall fall within the acceptable region of Fig 4B.

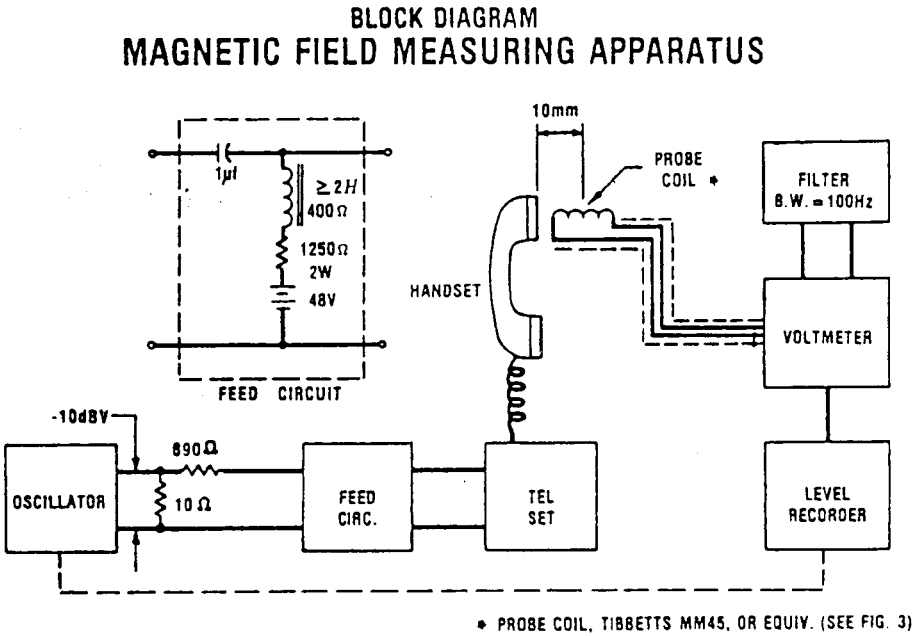


FIG 2 MEASUREMENT BLOCK DIAGRAM

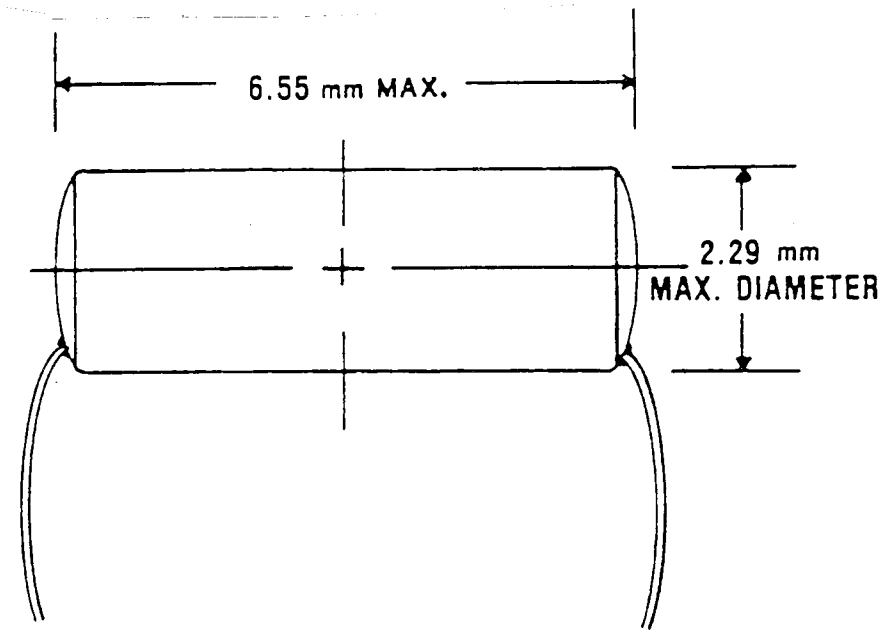


TYPICAL PARAMETERS OF PROBE COIL

DC RESISTANCE: 900 Ω
INDUCTANCE: 140 mH
SENSITIVITY: -60.5 dBV/(A/m)

FIG 3 PROBE COIL PARAMETERS

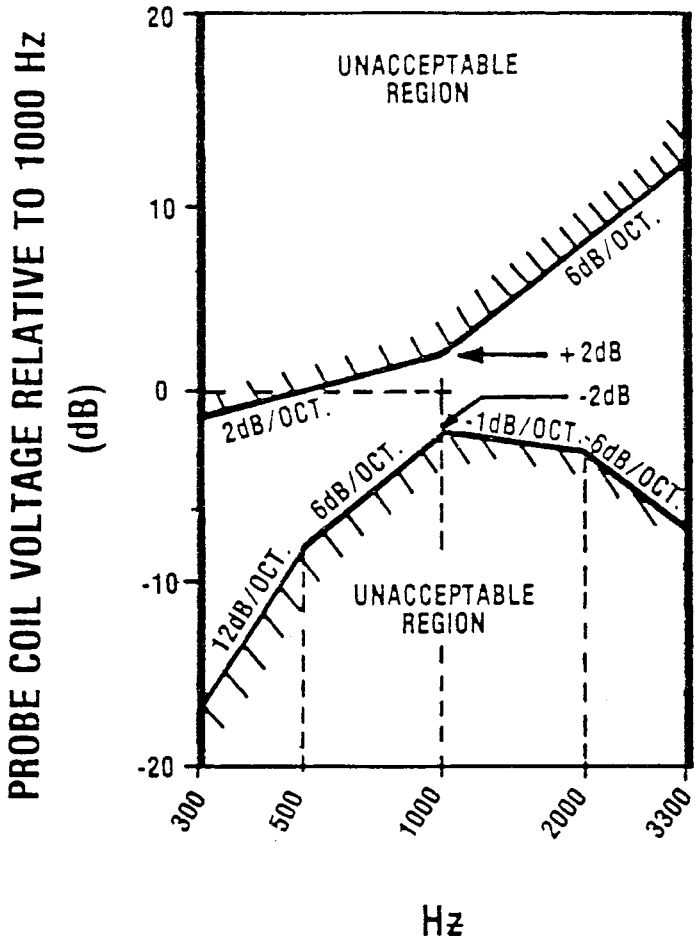


FIG 4A INDUCED VOLTAGE FREQUENCY RESPONSE
FOR RECEIVERS WITH AN AXIAL FIELD THAT EXCEEDS -19 dB

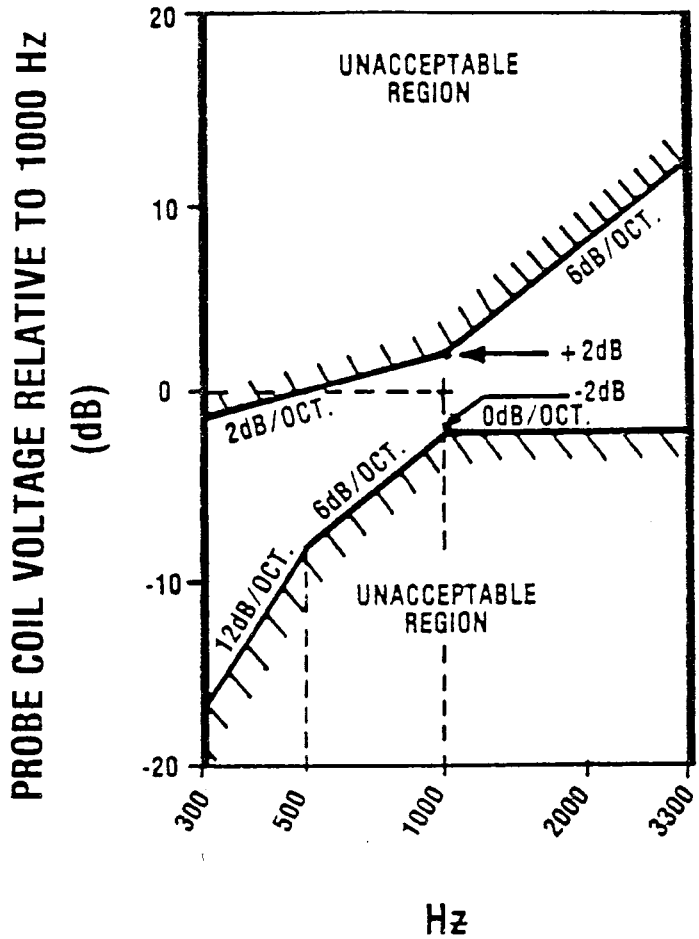


FIG 4B INDUCED VOLTAGE FREQUENCY RESPONSE
FOR RECEIVERS WITH AN AXIAL FIELD THAT EXCEEDS -22 dB

APPENDIX A—BIBLIOGRAPHY

(A1) EIA Standard RS–464, Private Branch Exchange (PBX) Switching Equipment for Voiceband Applications.

(A2) EIA Standard RS–478, Multi-Line Key Telephone Systems (KTS) for Voiceband Applications.

(A3) EIA Standard RS–470, Telephone Instruments with Loop Signaling for Voiceband Applications.

(A4) EIA Project Number PN–1361, Environmental and Safety Considerations for Voice Telephone Terminals.

(A5) Federal Communications Commission Rules and Regulations, part 68, Connection of Terminal Equipment to the Telephone Network.

(A6) IEEE Standard, Method for Measuring the Magnetic Field arould a Telephone Receiver. (to be published)

[49 FR 1363, Jan. 11, 1984, as amended at 61 FR 42187, Aug. 14, 1996]

## § 68.317 Hearing aid compatibility volume control: technical standards.

(a) An analog telephone complies with the Commission's volume control requirements if the telephone is equipped with a receive volume control that provides, through the receiver in the handset or headset of the telephone, 12 dB of gain minimum and up to 18 dB of gain maximum, when measured in terms of Receive Objective Loudness Rating (ROLR), as defined in paragraph 4.1.2 of ANSI/EIA–470–A–1987 (Telephone Instruments With Loop Signaling) . The 12 dB of gain minimum must be achieved without significant clipping of the test signal. The telephone also shall comply with the upper and lower limits for ROLR given in table 4.4 of ANSI/EIA–470–A–1987 when the receive volume control is set to its normal unamplified level.

NOTE TO PARAGRAPH (a): Paragraph 4.1.2 of ANSI/EIA–470–A–1987 identifies several characteristics related to the receive response of a telephone. It is only the normal unamplified ROLR level and the change in ROLR as a function of the volume control setting that are relevant to the specification of volume control as required by this section.

(b) The ROLR of an analog telephone shall be determined over the frequency range from 300 to 3300 HZ for short, average, and long loop conditions represented by 0, 2.7, and 4.6 km of 26 AWG nonloaded cable, respectively. The specified length of cable will be simulated by a complex impedance. (See Figure A.) The input level to the cable simulator shall be −10 dB with respect to 1 V open circuit from a 900 ohm source.

(c) A digital telephone complies with the Commission's volume control requirements if the telephone is equipped with a receive volume control that provides, through the receiver of the handset or headset of the telephone, 12 dB of gain minimum and up to 18 dB of gain maximum, when measured in terms of Receive Objective Loudness Rating (ROLR), as defined in paragraph 4.3.2 of ANSI/EIA/TIA–579–1991 (Acoustic-To-Digital and Digital-To-Acoustic Transmission Requirements for ISDN Terminals). The 12 dB of gain minimum must be achieved without significant clipping of the test signal. The telephone also shall comply with the limits on the range for ROLR given in paragraph 4.3.2.2 of ANSI/EIA/TIA–579–1991 when the receive volume control is set to its normal unamplified level.

(d) The ROLR of a digital telephone shall be determined over the frequency range from 300 to 3300 Hz using the method described in paragraph 4.3.2.1 of ANSI/EIA/TIA–579–1991. No variation in loop conditions is required for this measurement since the receive level of a digital telephone is independent of loop length.

(e) The ROLR for either an analog or digital telephone shall first be determined with the receive volume control at its normal unamplified level. The minimum volume control setting shall be used for this measurement unless the manufacturer identifies a different setting for the nominal volume level. The ROLR shall then be determined with the receive volume control at its maximum volume setting. Since ROLR is a loudness rating value expressed in dB of loss, more positive values of ROLR represent lower receive levels. Therefore, the ROLR value determined for the maximum volume control setting should be subtracted from that determined for the nominal volume control setting to determine compliance with the gain requirement.

(f) The 18 dB of receive gain may be exceeded provided that the amplified receive capability automatically resets to nominal gain when the telephone is

caused to pass through a proper on-hook transition in order to minimize the likelihood of damage to individuals with normal hearing.

(g) These incorporations by reference of paragraph 4.1.2 (including table 4.4) of American National Standards Institute (ANSI) Standard ANSI/EIA–470–A–1987 and paragraph 4.3.2 of ANSI/EIA/TIA–579–1991 were approved by the Director of the Federal Register in accordance with 5 U.S.C. 552(a) and 1 CFR part 51. Copies of these publications may be purchased from the American National Standards Institute (ANSI), Sales Department, 11 West 42nd Street, 13th Floor, New York, NY 10036, (212) 642–4900. Copies also may be inspected during normal business hours at the following locations: Consumer Information Bureau, Reference Information Center, Federal Communications Commission, 445 12th Street, SW, Washington, DC 20554; and Office of the Federal Register, 800 N. Capitol Street, NW., Suite 700, Washington, DC.

[61 FR 42187, Aug. 14, 1996, as amended at 64 FR 60726, Nov. 8, 1999]

### § 68.318 Additional limitations.

(a) *General.* Registered terminal equipment for connection to those services discussed below must incorporate the specified features.

(b) *Registered terminal equipment with automatic dialing capability.* (1) Automatic dialing to any individual number is limited to two successive attempts. Automatic dialing equipment which employ means for detecting both busy and reorder signals shall be permitted an additional 13 attempts if a busy or reorder signal is encountered on each attempt. The dialer shall be unable to re-attempt a call to the same number for at least 60 minutes following either the second or fifteenth successive attempt, whichever applies, unless the dialer is reactivated by either manual or external means. This rule does not apply to manually activated dialers that dial a number once following each activation.

NOTE TO PARAGRAPH (b)(1): Emergency alarm dialers and dialers under external computer control are exempt from these requirements.

(2) If means are employed for detecting both busy and reorder signals, the automatic dialing equipment shall return to its on-hook state within 15 seconds after detection of a busy or reorder signal.

(3) If the called party does not answer, the automatic dialer shall return to the on-hook state within 60 seconds of completion of dialing.

(4) If the called party answers, and the calling equipment does not detect a compatible terminal equipment at the called end, then the automatic dialing equipment shall be limited to one additional call which is answered. The automatic dialing equipment shall comply with paragraphs (b)(1), (b)(2), and (b)(3) of this section for additional call attempts that are not answered.

(5) Sequential dialers shall dial only once to any individual number before proceeding to dial another number.

(6) Network addressing signals shall be transmitted no earlier than:

(i) 70 ms after receipt of dial tone at the network demarcation point; or

(ii) 600 ms after automatically going off-hook (for single line equipment that does not use dial tone detectors); or

(iii) 70 ms after receipt of CO ground start at the network demarcation point.

(c) *Line seizure by automatic telephone dialing systems.* Automatic telephone dialing systems which deliver a recorded message to the called party must release the called party's telephone line within 5 seconds of the time notification is transmitted to the system that the called party has hung up, to allow the called party's line to be used to make or receive other calls.

(d) *Telephone facsimile machines; Identification of the sender of the message.* It shall be unlawful for any person within the United States to use a computer or other electronic device to send any message via a telephone facsimile machine unless such message clearly contains, in a margin at the top or bottom of each transmitted page or on the first page of the transmission, the date and time it is sent and an identification of the business, other entity, or individual sending the message and the telephone number of the sending machine or of such business, other entity, or individual. Telephone facsimile machines manufactured on and after December 20, 1992, must clearly mark such identifying information on each transmitted message.

(e) *Requirement that registered equipment allow access to common carriers.*

Any equipment or software manufactured or imported on or after April 17, 1992, and installed by any aggregator shall be technologically capable of providing consumers with access to interstate providers of operator services through the use of equal access codes. The terms used in this paragraph shall have meanings defined in § 64.708 of this chapter (47 CFR 64.708).

[62 FR 61691, Nov. 19, 1997]

## Subpart E—Complaint Procedures

### § 68.400 Content.

A complaint shall be in writing and shall contain:

(a) The name and address of the complainant,

(b) The name (and address, if known) of the defendant against whom the complaint is made,

(c) A complete statement of the facts, including supporting data, where available, showing that such defendant did or omitted to do anything in contravention of part 68 of the Commission's Rules, and

(d) The relief sought.

### § 68.402 Amended complaints.

An amended complaint setting forth transactions, occurrences or events which have happened since the filing of the original complaint and which relate to the original cause of action may be filed with the Commission.

### § 68.404 Number of copies.

An original and two copies of all complaints and amended complaints shall be filed. An original and one copy of all other pleadings shall be filed.

### § 68.406 Service.

(a) The Commission will serve a copy of any complaint or amended complaint filed with it, together with a notice of the filing of the complaint. Such notice shall call upon the defendant to satisfy or answer the complaint in writing within the time specified in said notice of complaint.

(b) All subsequent pleadings and briefs shall be served by the filing party on all other parties to the proceeding in accordance with the requirements of § 1.47. Proof of such service shall also be made in accordance with the requirements of said section.

### § 68.408 Answers to complaints and amended complaints.

Any party upon whom a copy of a complaint or amended complaint is served under this subpart shall serve an answer within the time specified by the Commission in its notice of complaint. The answer shall advise the parties and the Commission fully and completely of the nature of the defense, and shall respond specifically to all material allegations of the complaint. In cases involving allegations of harm, the answer shall indicate what action has been taken or is proposed to be taken to stop the occurrence of such harm, both in terms of future production and with reference to articles in the possession of distributors, sellers, and users. Collateral or immaterial issues shall be avoided in answers and every effort should be made to narrow the issues. Matters alleged as affirmative defenses shall be separately stated and numbered. Any defendant failing to file and serve an answer within the time and in the manner prescribed may be deemed in default.

### § 68.410 Replies to answers or amended answers.

Within 10 days after service of an answer or an amended answer, a complainant may serve a reply which shall be responsive to matters contained in such answer or amended answer and shall not contain new matters. Failure to reply will not be deemed an admission of any allegation contained in such answer or amended answer.

### § 68.412 Defective pleadings.

Any pleading filed in a complaint proceeding not in substantial conformity with the requirements of the applicable rules in this part may be dismissed.

### § 68.414 Hearing aid-compatibility: Enforcement.

Enforcement of §§ 68.4 and 68.112 is hereby delegated to those states which adopt those sections and provide for their enforcement. The procedures followed by a state to enforce those sections shall provide a 30-day period after

a complaint is filed, during which time state personnel shall attempt to resolve a dispute on an informal basis. If a state has not adopted or incorporated §§ 68.4 and 68.112, or failed to act within 6 months from the filing of a complaint with the state public utility commission, the Commission will accept such compliants. A written notification to the complainant that the state believes action is unwarranted is not a failure to act.

[49 FR 1368, Jan. 11, 1984]

## Subpart F—Connectors

SOURCE: 41 FR 28699, July 12, 1976, unless otherwise noted.

### § 68.500 Specifications.

*General.* The US customary units are shown in parentheses throughout this subpart F. US customary units were the original dimensional units used in designing the plugs and jacks shown in the following pages. The dimensions shown without parenthesis are in SI units. The SI dimensional units are derived from the US customary units by multiplying ''inches'' by ''25.4'' to derive the exact conversion in millimeters with no rounding-off of the resulting decimal value. The number of decimal places to which the conversion is taken by adding a particular number of zeroes to the right end of the resulting SI value, where required, is governed by the concept that when the calculated SI dimensional unit is divided by ''25.4,'' the resulting ''inches'' calculation will be exactly that shown in the parenthesis (the original design dimension). The conversion to SI force units, newtons, is rounded off to a number of decimal places that will result in the calculated SI force value being within less than one percent of the original US customary force unit value located adjacent in parenthesis (the original design value). The rationale for this is that this ill bring the force conversions to within the degree of accuracy of the force-measuring device and avoid the carrying of an unrealistic number of decimal places which would otherwise result from an exact conversion. The plugs and jacks described in this section represent the standard connections to be used for connections to the telephone network. The plug and jack designs shown are representative of generic types, and should not be interpreted as the only designs that may be used. Design innovation and improvement is expected; but for interchangeability to be maintained, alternative designs (the ''or equivalent'' permitted in § 68.104) must be compatible with the plugs and jacks shown. The interface dimensions between mating plugs and jacks must be maintained. Hardware used to mount, protect, and enclose standard jacks is not described. The only requirement on connecting blocks, housings, dust covers, outdoor boxes, and the like that contain standard network jacks is that they accept standard plugs with cordage. For special purpose applications, plugs may be made longer than shown or adapted for direct use on equipment or apparatus without cordage. The sliding modular plug used on the back of many modular wall telephone sets is an example of such a special purpose application. It is the responsibility of the designers and manufacturers of communication equipment who use such plugs to assure that they are compatible with the hardware used to mount standard jacks with which they plan to interface. For the purposes of this section, hard gold and contact performance equivalent to gold shall be determined in accordance with the standards detailed in Appendix H of TIA Telecommunications Systems Bulletin No. 31 Part 68 Rationale and Measurement Guidelines (TSB.31), prepared by EIA/TIA TR–41 Committee on Telephone Terminals (1992). This publication may be obtained by contacting Global Engineering Documents, 7730 Carondelet Avenue, Suite #407, St. Louis, Missouri, 63105. (Telephone number 1–800–854–7179).

(a) *Minature 6-position plug:*

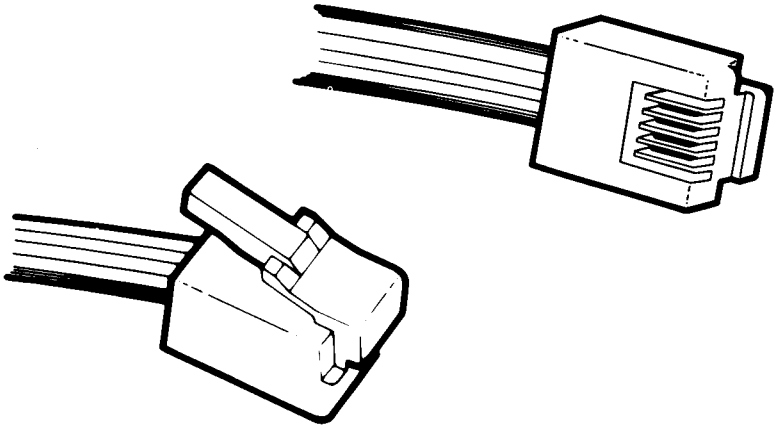

(Note: This plug is depicted equipped with 4 contacts; it may be fabricated with its full 6 contact capability.)

Figure 68.500(a)(1)(i)--View

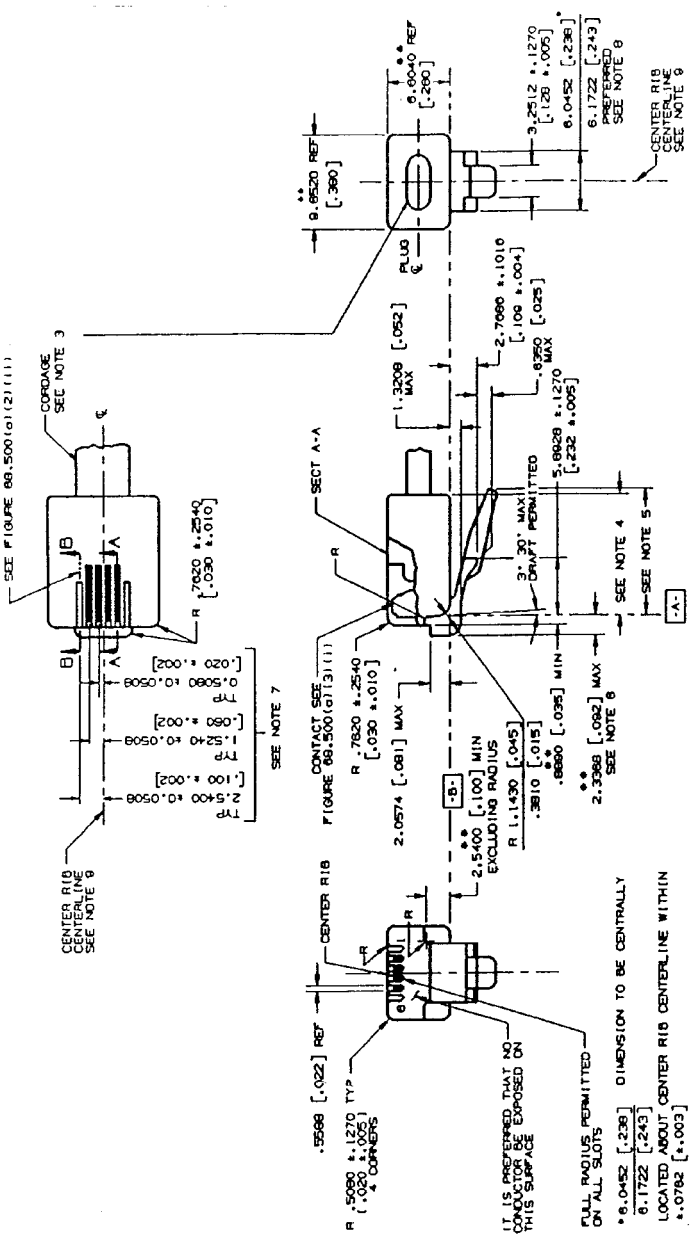


FIGURE 68.500(a)(2)(i)(i) - 6 POSITION PLUG MECHANICAL SPECIFICATION

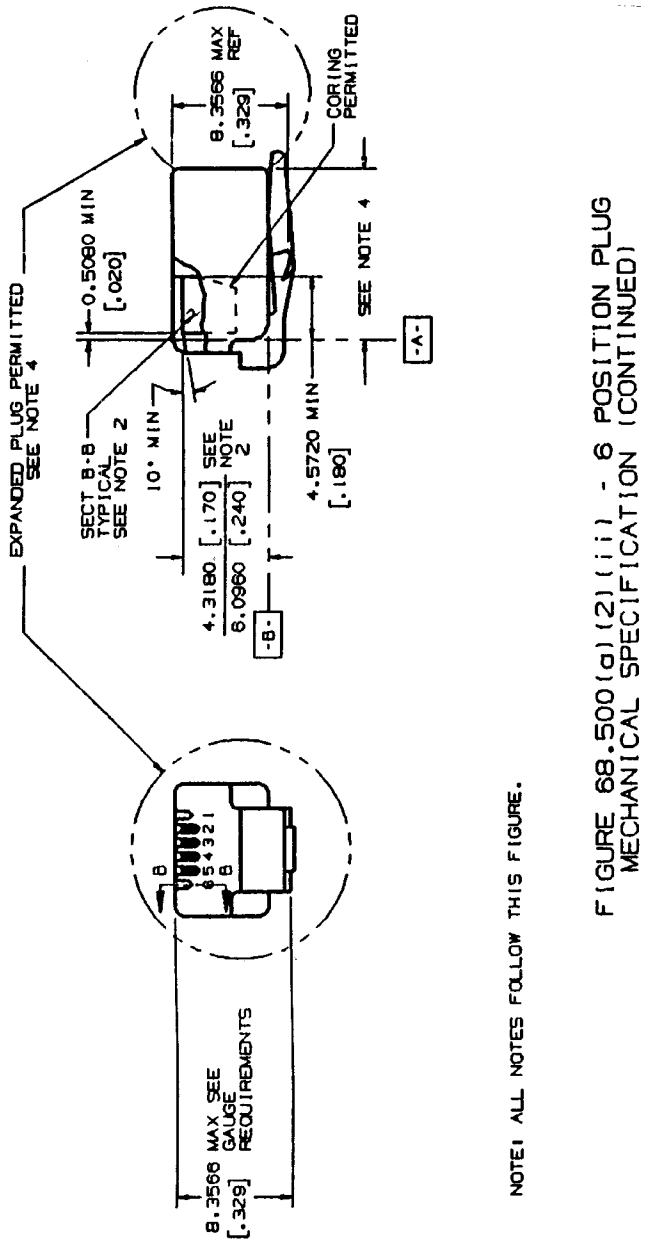


NOTE: ALL NOTES FOLLOW THIS FIGURE.

FIGURE 68.500(a)(2)(ii) - 6 POSITION PLUG MECHANICAL SPECIFICATION (CONTINUED)

NOTES: (Notes apply to Figures 68.500(a)(2)(i) and 68.500(a)(2)(ii))

1. All plugs must be capable of meeting the requirements of the plugs go and no-go gauges.

2. Section BB applies to any jack contact receiving slot which does not contain a plug contact.
3. The preferred major cordage cross section is 2.5400 mm (.100 inch) max. thick by 5.0800 mm (.200 inch) max. wide, with rounded corners. It should exit the plug on the plug centerline. Other cordage configurations are permitted but may inhibit the special features of some network jack enclosures.
4. The standard plug length is 11.6840 mm (.460 inch) max. Plugs may be made longer than standard or adapted for direct use on special cords, adapters with out cordage, and on apparatus or equipment subject to the limitations described in the Section 68.500 introductory paragraphs. Plugs longer than standard may inhibit the special features of some network jack enclosures.
5. A 12.0396 mm (.474 inch) minimum tab length is required. It is preferred that a maximum tab length be no longer than 13.2080 mm (.520 inch). Longer tabs may be used with the same limitations as described in Note 4.
6. To obtain maximum plug guidance when 6-position plugs are inserted in 8-position jacks, it is desirable to extend the front plug nose to the 2.3368 mm (.092 inch) maximum.
7. These dimensions apply to the location of jack contact receiving slots. It is desirable that plug contacts be centered axially in these slots, but centering is not required.
8. The 6.0452/6.1722 mm (.238/.243 inch) dimension is preferred to obtain maximum plug guidance in jacks with more than 6 conductors. A tolerance range of 5.9182/6.1722 mm (.233/.243 inch) is permitted, but may create targeting problems in 8-position jacks.
9. The center rib centerline shall be coincident with the plug width 9.6520 mm (.380 inch) ref. centerline within +/− .0762mm (+/− .003 inch).

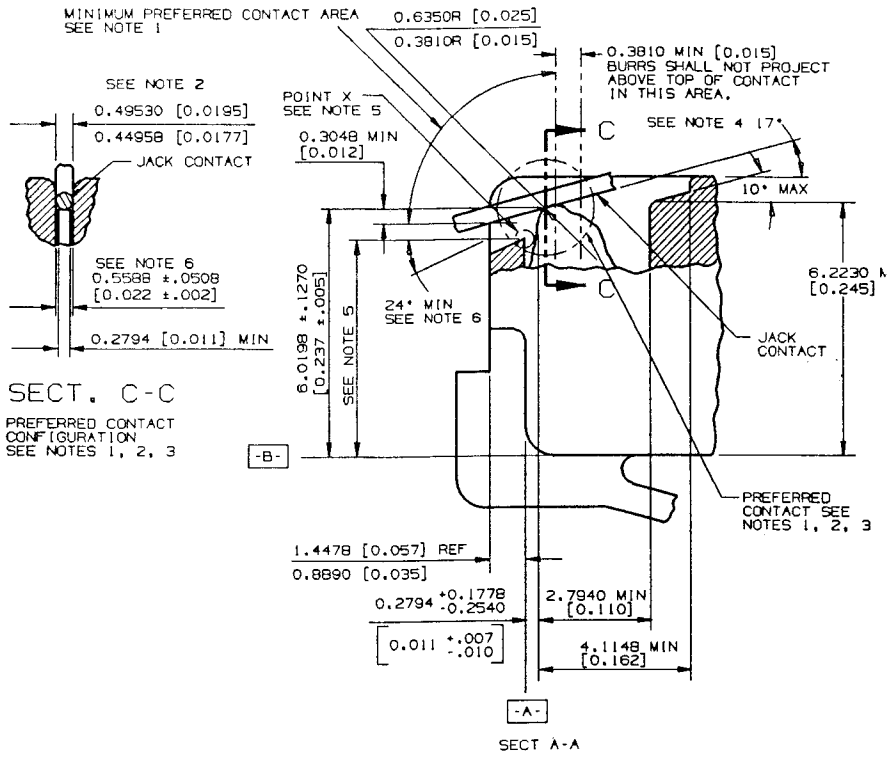


NOTE: ALL NOTES FOLLOW THIS FIGURE.

NOTE: THE 8 POSITION PLUG/JACK CONTACT SPECIFICATION IS IDENTICAL.

FIGURE 68.500(a)(3)(i)- 6 POSITION PLUG
PLUG /JACK CONTACT SPECIFICATION

NOTES: (Notes apply to Figure 68.500(a)(3)(i))

1. The plug/jack contact interface should be hard gold to hard gold and should have a minimum gold thickness of .0012700 mm (0.000050 inch) on each side of the interface. The minimum contact force should be .98 N (100 grams). Any non-gold contact material must be compatible with gold and provide equivalent contact performance. A smooth, burr-free surface is required at the interface in the area shown.
2. The jack contact design is based upon .4572 mm (.018 inch) spring temper phosphor bronze round wire in the modular plug blade and jack contact interface. Other contact configurations that provide contact performance equal to or better than the preferred configurations and do not cause damage to the plug or jack are permitted. The preferred jack contact width is .44958/.49530 mm (.0177/.0195 inches). Deviations from the preferred jack contact width are permitted for round contacts as well as noncircular cross sectional shapes but they must be compatible with existing plug configurations. The requirements of Note 1 apply to all possible contact areas.
3. The configuration of the plug contact and the front plastic of the plug should prevent

jack contacts from being damaged during plug insertion into jacks.

4. This is the suggested nominal contact angle between plugs and jacks with the plug latched into the jack. If this angle becomes greater than 24 degrees loss of electrical contact may occur between the plug and jack. If the nominal contact angle becomes less than 13 degrees, interference between jack contacts and the internal plastic in the plug may occur.

5. To avoid loss of electrical contact, the preferred dimension from datum B to the highest point ''X'' should be 5.0800 mm (.200 inch) max. A dimension greater than 5.3594 mm (.211 inch) may result in loss of electrical contact between plugs and jacks. The 5.3594 mm (.211 inch) max. shall be considered an absolute maximum.

6. The 24 degree min. angle applies only to plugs with front plastic walls higher than 4.8260 mm (.190 inches).

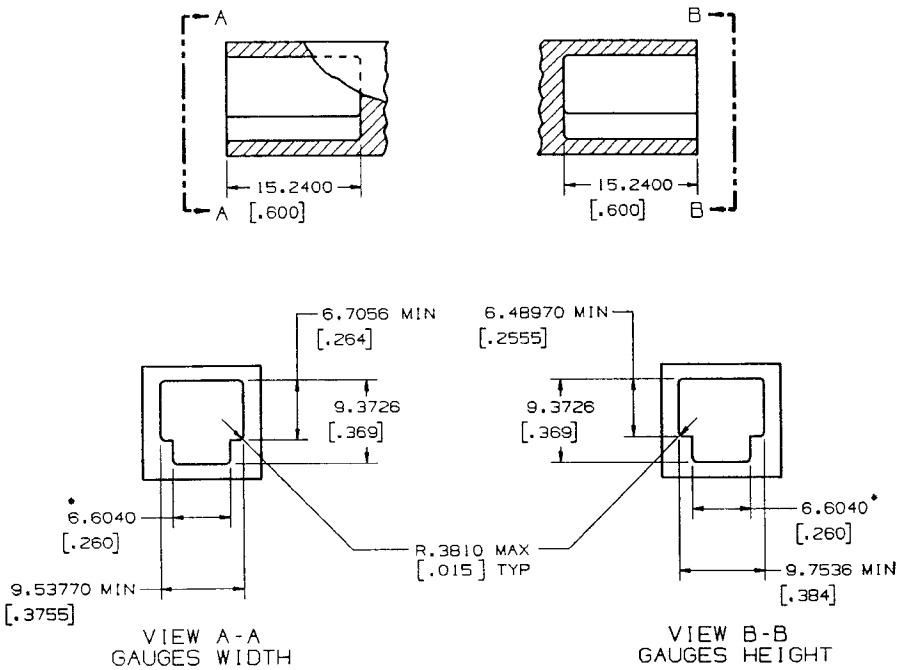


NO-GO GAUGE

NOTES:

1. THE PLUG SHALL NOT BE CAPABLE OF ENTERING THE GAUGE MORE THAN 1.7780mm [.070] BEYOND DATUM-A- (SEE FIGURE 68.500(a)(2)(i)) WITH 8.90 newtons[2.0 POUNDS] INSERTION FORCE.

2. NON-TOLERANCED DIMENSIONS GIVEN TO FOUR PLACES SHALL BE WITHIN ±0.0508mm [.002].

3. *6.6040mm [.260] DIMENSION TO BE CENTRALLY LOCATED WITH RESPECT TO 9.7536mm [.384] MINIMUM AND 9.53770mm [.3755] MINIMUM WITHIN ±0.0508mm [.002].

FIGURE 68.500(a)(4)(i)- 6 POSITION PLUG
MINIMUM PLUG SIZE

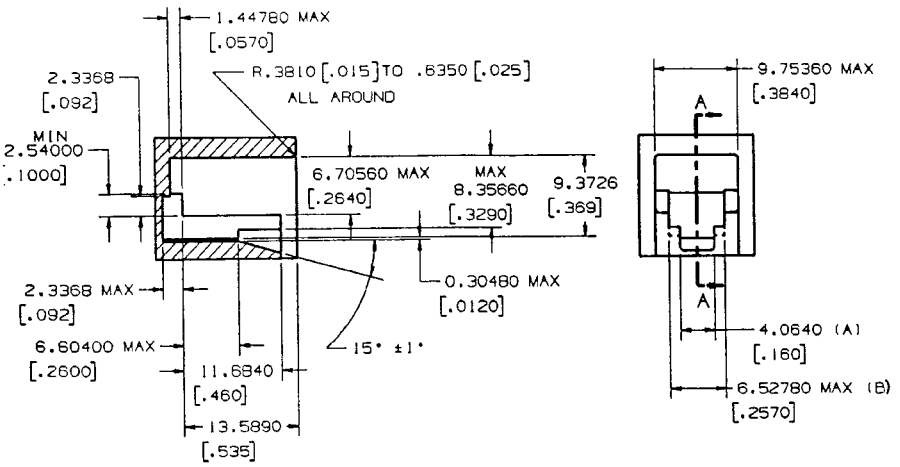


SECT. A-A

GO GAUGE

NOTES

1. THE PLUG SHALL BE CAPABLE OF INSERTION AND LATCHING INTO THE GUAGE WITH 22.24 newtons [5 POUNDS] OR LESS INSERTIONS FORCE. PLUG LATCHING BAR SHALL BE DEPRESSED SO AS NOT TO INTERFERE WITH THE PLUG ENTRY. AFTER INSERTION AND LATCHING, PLUG SHALL BE CAPABLE OF REMOVAL, WITH THE LATCH DEPRESSED, WITH A REMOVAL FORCE OF 44.48 newtons [10 POUNDS] OR LESS APPLIED AT AN ADVANTAGEOUS ANGLE.
2. DIMENSIONS GIVEN TO FOUR DECIMAL PLACES SHALL BE WITHIN ±.0508mm [±.002].
3. DIMENSIONS (A) AND (B) TO BE CENTRALLY LOCATED WITH RESPECT TO 9.75360mm [.3840] MAX. JACK OPENING WIDTH WITHIN ±0.0254mm [.001].
4. DO NOT SCALE DRAWINGS FOR EXTERNAL CONFIGURATION.

FIGURE 68.500(a)(5)(i)- 6 POSITION PLUG
MAXIMUM PLUG SIZE

(b) *Miniature 6-position jack:*

(1) [Reserved]

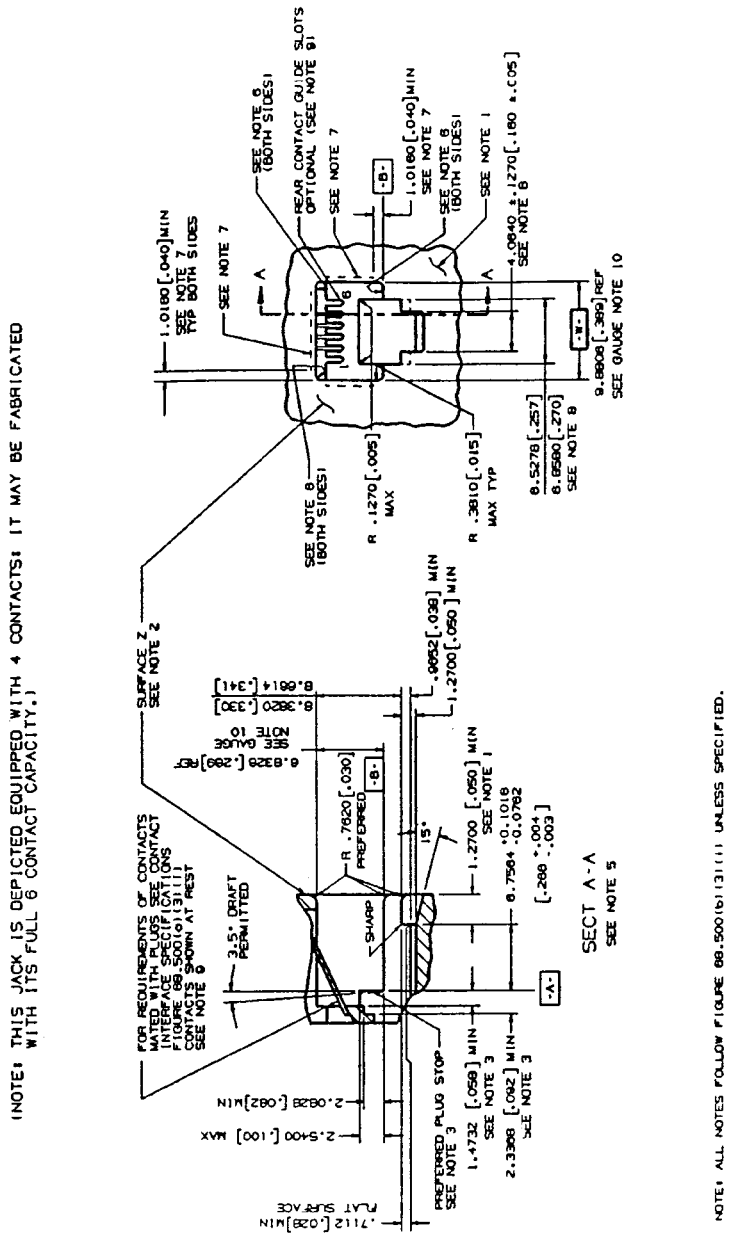


FIGURE 68.500(b)(2)(ii)- 6 POSITION JACK MECHANICAL SPECIFICATION

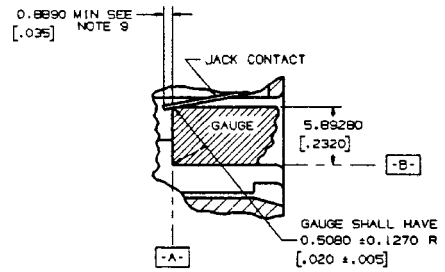


SEC A-A

(SHOWN WITHOUT REAR CONTACT GUIDES)

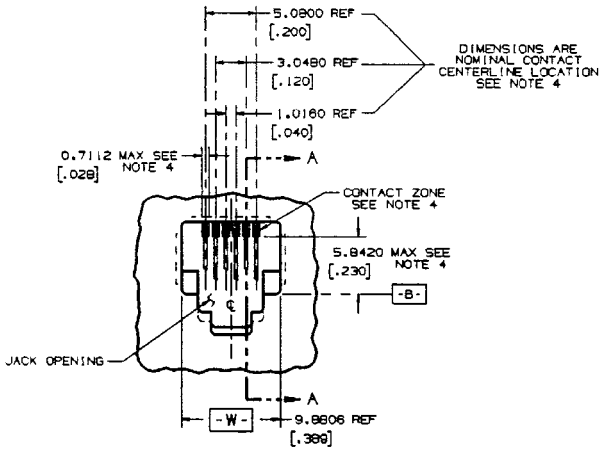


VIEW OF CONTACT ZONE

(SHOWN WITHOUT REAR CONTACT GUIDES)

NOTE: ALL NOTES FOLLOW THIS FIGURE.

FIGURE 68.500(b)(3)(i)- 6 POSITION JACK
MECHANICAL SPECIFICATIONS (CONTINUED)

NOTES: (Notes apply to Figures 68.500(b)(2)(i) and 68.500(b)(3)(i).)

1. Front surface projections beyond the 1.2700 mm (.050 inch) min. shall be configured so as not to prevent finger access to the plug release catch (Reference Figure 68.500(a)(2)(i), 6-Position Plug, Mechanical Specifications). A catch length greater

than 1.2700 mm (.050 inch) is beneficial in providing greater breakout strength.

2. Surface Z need not be planar or coincident with the surface under the plug release catch. Surface Z projections must not prevent insertion, latching, and unlatching of the standard 6-position plug described in § 68.500(a).
3. The preferred plug stop surface is indicated. If some other internal feature is used as a plug stop, it must be located so that the axial movement of a latched plug is no greater than 1.1430 mm (0.045 inch).
4. To prevent mistargeting between the plug and jack contacts, the jack contacts should be completely contained in their individual contact zones, .7112 mm (.028 inch) max. wide, where they extend into the jack openings. There is no location requirement for jack contacts below these zones 5.8420 mm (.230 inch) max., but adequate contact separation must be maintained to prevent electrical breakdown. These shaded contact zones should be centrally located, (included all locating tolerances), about the jack opening width 9.8806 mm (.389 inch) Ref, (Datum -W-). Contacts located outside of these zones may result in mistargeting between the jack and plug contacts.
5. All inside and outside corners in the plug cavity to be .3810 mm (.015 inch) radius max. unless specified.
6. These surfaces shall have 0°15′ maximum draft.
7. Relief inside the dotted areas on 3 sides of the jack opening is permitted. The 6.8326 mm (.269 inch) Ref and 9.8806 mm (.389 inch) Ref Gauge Requirements must be maintained in each corner, (ref. 1.0160 mm (0.040 inch) min), to assure proper plug/jack interface guidance. A .8128 mm ±.1270 mm (.032 inch ±.005 inch) relief on the top side, (opposite plug catch), is required on jacks in connecting blocks which mount and connect portable wall telephones so as to assure interface with the special purpose sliding modular plug used on many wall telephone sets.
8. 4.0640 mm (.160 inch) and 6.5278/6.8580 mm (.257/.270 inch) dimensions to be centrally located to jack opening width -W- within ±.1778 mm (0.007 inch).
9. Minimum acceptable jack contact length. When contact guide slots are used, the contacts must always be contained inside the guide slots and the contacts must move freely in the slots so as not to restrain plug insertion or damage jack contacts.
10. Gauge Requirements:

GO: The jack shall be capable of accepting a 9.7536 x 6.7056 mm (0.3840 x 0.2640 inch) gauge and the gauge shall be capable of being removed with a maximum force of 8.9 newtons (2 pounds).

NO GO: The jack shall not accept either a 10.00760 x 6.45160 mm (0.3940 x 0.254 inch) horizontal width of opening gauge or a 6.95960 x 9.5504 mm (.2740 x .376 inch) vertical height of opening gauge. However, if either gauge is accepted the force necessary to remove the gauge shall be minimum .83 newtons (3.0 ounces).

Removal forces do not include forces contributed by contact springs nor shall external forces be applied to the jack that will affect these removal forces.

Gauges shall have a .7620 mm (.030 inch) radius on the nose and a .3810 mm (0.015 inch) radius on all edges with clearance provided for contacts.

(c) *Miniature 8-position plug, unkeyed:*

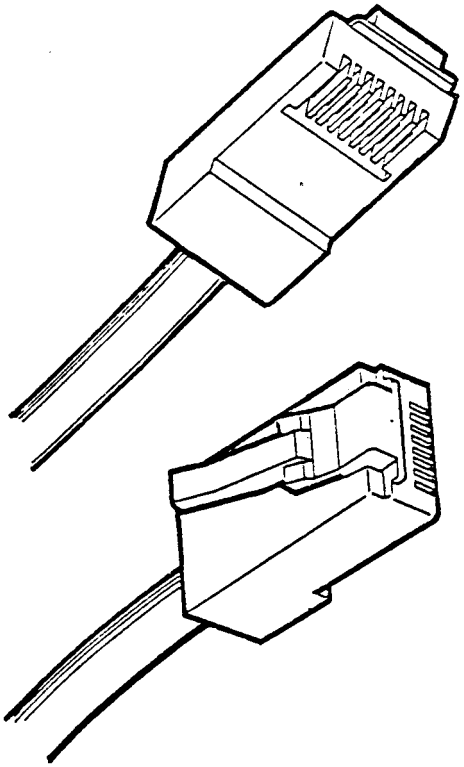

Figure 68.500(c)(1)(i) – View

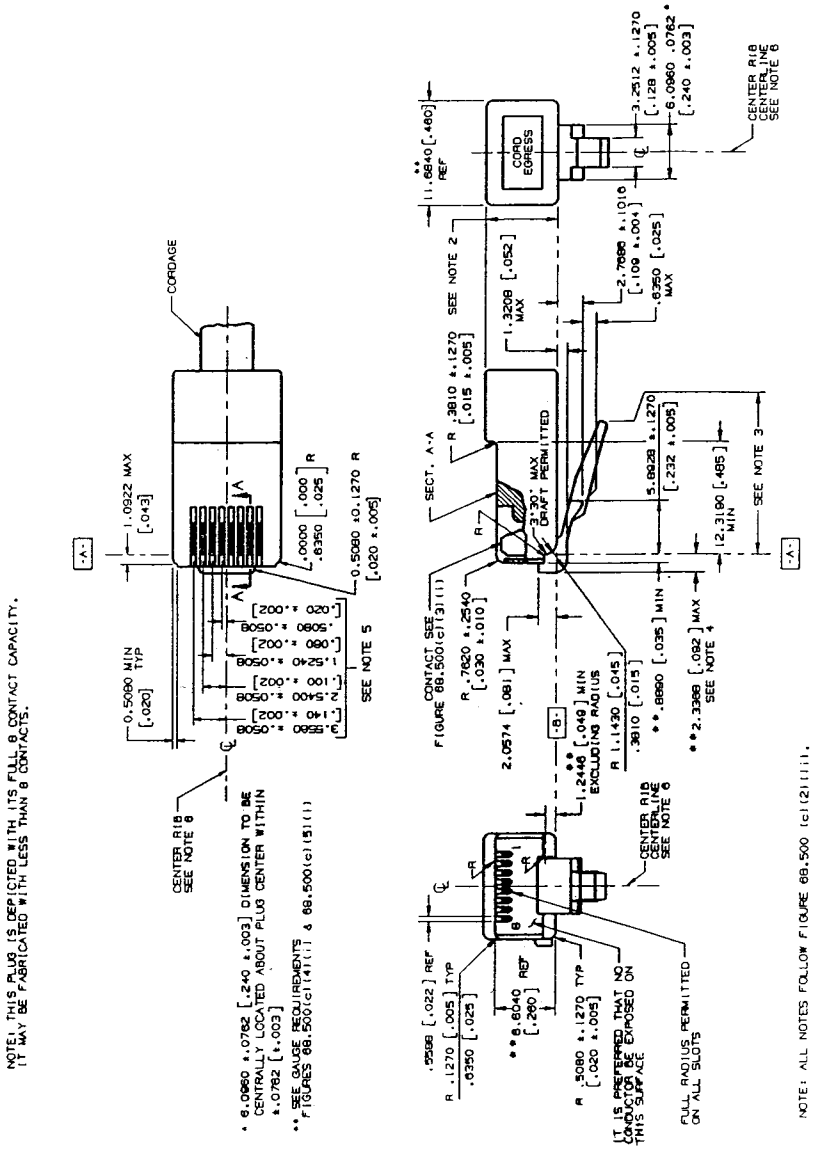


FIGURE 68.500(c)(2)(ii) - 8 POSITION UNKEYED PLUG, MECHANICAL SPECIFICATION

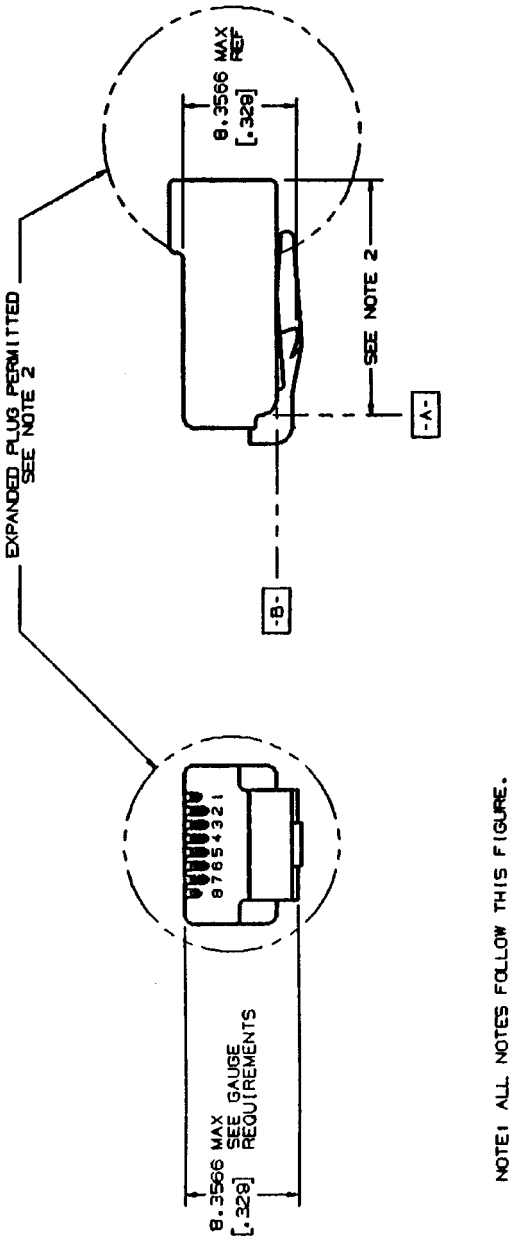


NOTE: ALL NOTES FOLLOW THIS FIGURE.

FIGURE 68.500(c)(2)(ii) - 8 POSITION UNKEYED
PLUG, MECHANICAL SPECIFICATION (CONTINUED)

NOTES: (Notes apply to Figures 68.500(c)(2)(i) and 68.500(c)(2)(ii))

1. All plugs must be capable of meeting the requirements of the plug go and no-go gauges.

2. The standard plug height in the area shown is 8.0010 mm (.315 inch) maximum. The standard plug length is 23.1140 mm (.910 inch) maximum. Plugs may be made longer than standard or adapted for direct use on special cords, adapters without cordage, apparatus or equipment subject to the limitations described in the introductory paragraphs of 68.500. Plugs longer and/or higher than standard may inhibit the special features of some network jack enclosures.
3. A 14.6050 mm (.575 inch) minimum tab length is required. It is preferred that a maximum tab length be no longer than 15.8750 mm (.625 inch). Longer tabs may be used with the same limitations described in Note 2.
4. To obtain maximum plug guidance in jacks, it is desirable to extend the front plug nose to the 2.3368 mm (.092 inch) maximum.
5. These dimensions apply to the location of jack contact receiving slots. It is desirable that plug contacts be centered axially in these slots, but centering is not required.
6. The center rib centerline shall be coincident with the plug width 11.6840 mm ref. (.460 inch ref.) centerline within ±.0762 mm (.003 inch).

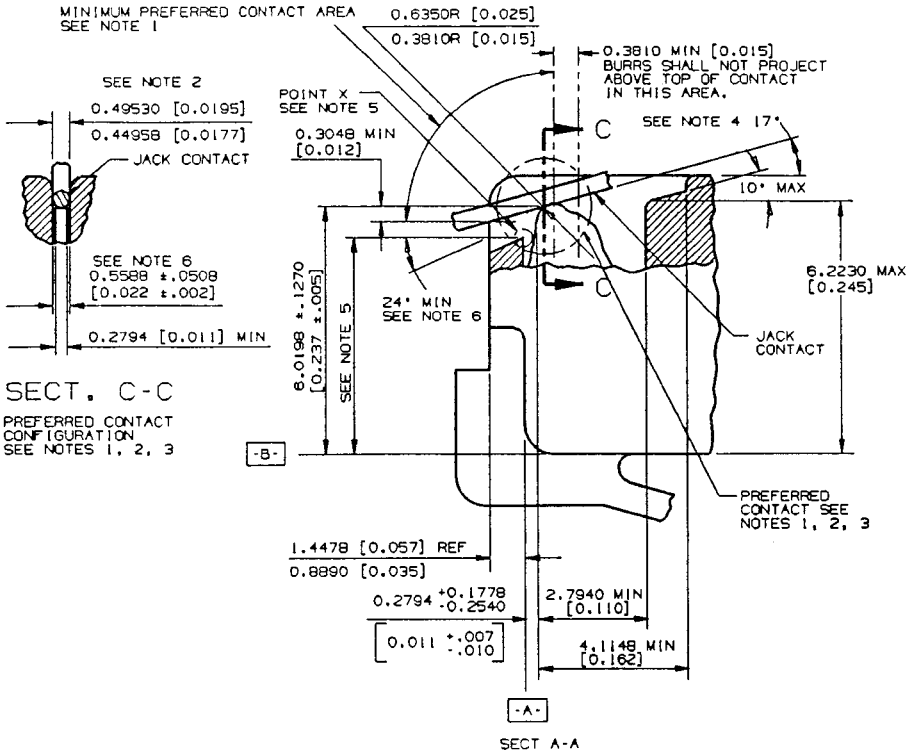


NOTE: ALL NOTES FOLLOW THIS FIGURE.

NOTE: THE 6 POSITION PLUG/JACK CONTACT SPECIFICATION IS IDENTICAL.

FIGURE 68.500(c)(3)(i)- 8 POSITION UNKEYED PLUG
PLUG /JACK CONTACT SPECIFICATION

NOTES: (Notes apply to Figure 68.500(c)(3)(i))

1. The plug/jack contact interface should be hard gold to hard gold and should have a minimum gold thickness of .0012700 mm (.000050 inch) on each side of the interface. The minimum contact force should be .98 N (100 grams). Any non-gold contact material must be compatible with gold and provide equivalent contact performance. A smooth, burr-free surface is required at the interface in the area shown.
2. The jack contact design is based upon .4572 mm (.018 inch) spring temper phosphor bronze round wire in the modular plug blade and jack contact interface. Other contact configurations that provide contact performance equal to or better than the preferred configurations and do not cause damage to the plug or jack are permitted. The preferred jack contact width is .44958/.49530 mm (.0177/.0195 inches). Deviations from the preferred jack contact width are permitted for round contacts as well as noncircular cross sectional shapes but they must be compatible with existing plug configurations. The requirements of Note 1 apply to all possible contract areas.
3. The configuration of the plug contact and the front plastic of the plug should prevent jack contacts from being damaged during plug insertion into jacks.
4. This is the suggested nominal contact angle between plugs and jacks with the plug latched into the jack. If this angle becomes greater than 24 degrees loss of electrical contact may occur between the plug and jack. If the nominal contact angle becomes less than 13 degrees, interference between jack contacts and the internal plastic in the plug may occur.
5. To avoid loss of electrical contact, the preferred dimension from datum B to the highest point ''X'' should be 5.0800 mm (.200 inch) max. A dimension greater than 5.3594 mm (.211 inch) may result in loss of electrical contact between plugs and jacks. The 5.3594 mm (.211 inch) max. shall be considered an absolute maximum.
6. The 24 degree min. angle applies only to plugs with front plastic walls higher than 4.8260 mm (.190 inches).

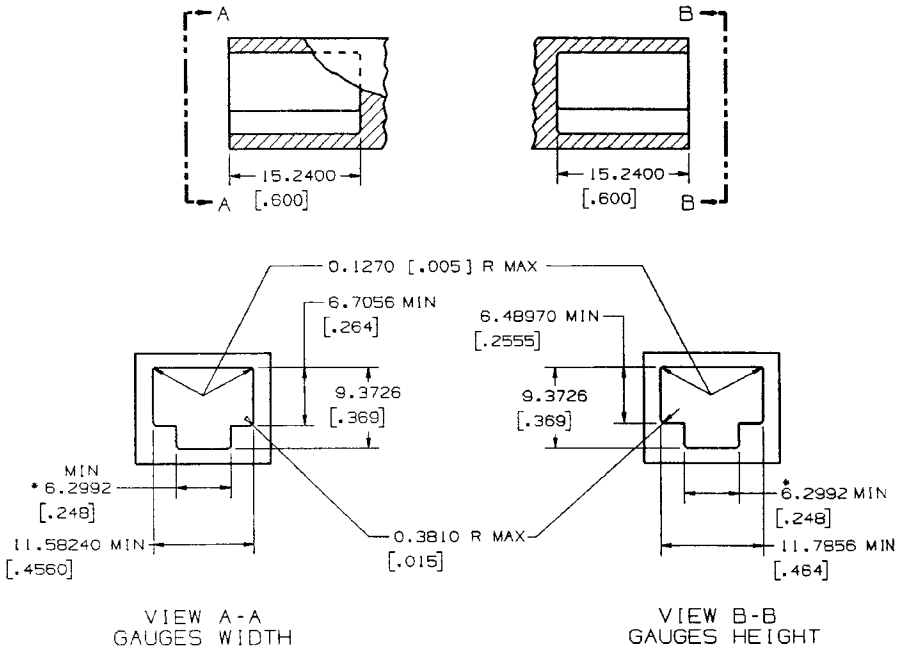


NO-GO GAUGE

NOTES:

1. THE PLUG SHALL NOT BE CAPABLE OF ENTERING THE GAUGE MORE THAN 1.7780mm [.070] BEYOND DATUM-A-(SEE FIGURE 68.500(c)(2)(i)) WITH 8.90 neuton [2.0 POUNDS] INSERTION FORCE.

2. NON-TOLERANCED DIMENSIONS GIVEN TO FOUR PLACES SHALL BE WITHIN ±0.0508mm [.002].

3. * 6.2992mm [.248] DIMENSION TO BE CENTRALLY LOCATED WITH RESPECT TO 11.7856mm [.464] MINIMUM AND 11.58240mm [.4560] MIMIMUM WITHIN ±0.0508mm [.002].

FIGURE 68.500(c)(4)(i)-B POSITION UNKEYED PLUG, MINIMUM PLUG SIZE

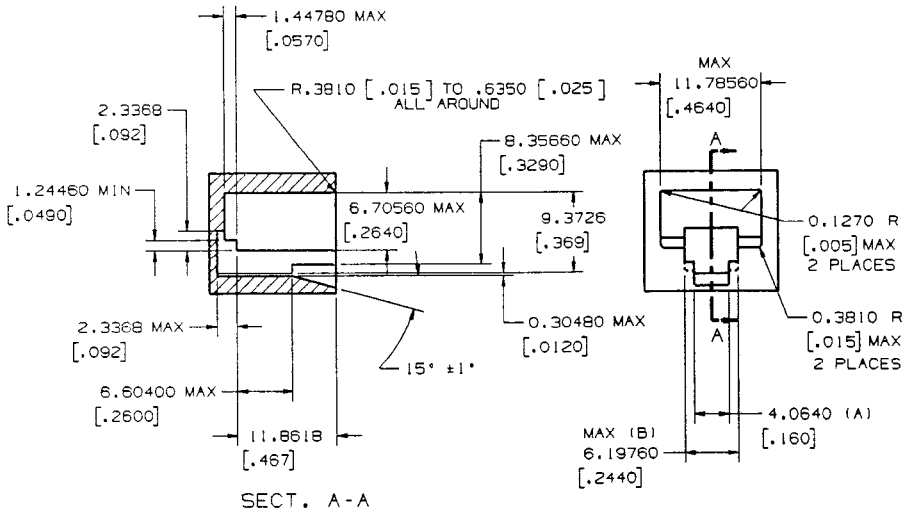


GO GAUGE

NOTES:

1. THE PLUG SHALL BE CAPABLE OF INSERTION AND LATCHING INTO THE GAUGE WITH 22.24 newtons [5 POUNDS] OR OR LESS INSERTION FORCE. PLUG LATCHING BAR SHALL BE DEPRESSED SO AS NOT TO INTERFERE WITH THE PLUG ENTRY. AFTER INSERTION AND LATCHING, PLUG SHALL BE CAPABLE OF REMOVAL, WITH THE LATCH DEPRESSED, WITH REMOVAL FORCE OF 44.48 newtons [10 POUNDS] OR LESS APPLIED AT AN ADVANTAGEOUS ANGLE.
2. DIMENSIONS GIVEN TO FOUR DECIMAL PLACES SHALL BE WITHIN ±.0508mm [.002].
3. DIMENSIONS (A) AND (B) TO BE CENTRALLY LOCATED WITH RESPECT TO 11.78560mm [.4640] MAX. JACK OPENING WIDTH WITHIN ±0.0254mm [.001].
4. DO NOT SCALE DRAWINGS FOR EXTERNAL CONFIGURATION.

FIGURE 68.500(c)(5)(i)-8 POSITION UNKEYED PLUG, MAXIMUM PLUG SIZE

(d) *Miniature 8-position series jack:*

(d) *Miniature 8-position series jack:*

APPENDIX A-17

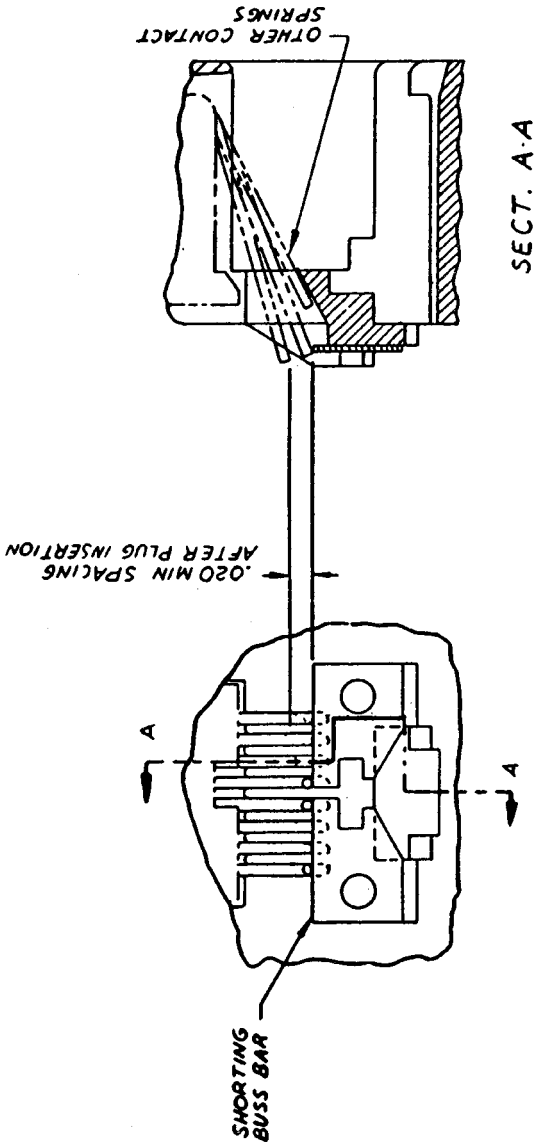


Figure 68.500(d)(3)--8 Position Series Jack, Contact Specification

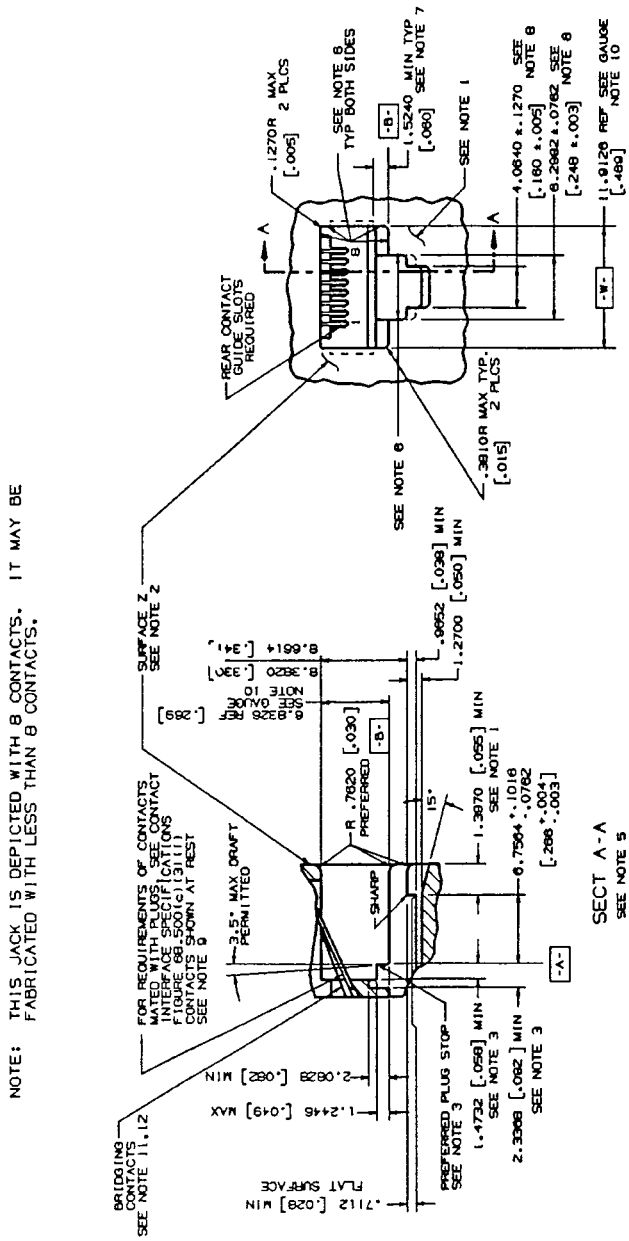


FIGURE 68.500(d)(2)(i)-8 POSITION SERIES JACK, MECHANICAL SPECIFICATION

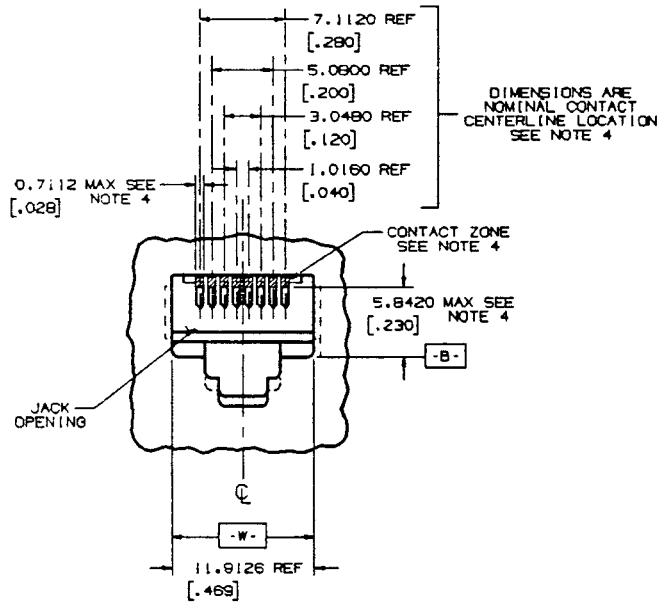


VIEW OF CONTACT ZONE

NOTE: ALL NOTES FOLLOW THIS FIGURE.

FIGURE 68.500(d)(3)(i)-8 POSITION SERIES JACK, MECHANICAL SPECIFICATION (CONTINUED)

NOTES: (Notes apply to Figures 68.500(d)(2)(i) and 68.500(d)(3)(i))

1. Front surface projections beyond the 1.3970 mm (.055 inch) minimum shall be configured so as not to prevent finger access to the plug release catch (Reference Figure 68.500(a)(2)(i) and Figure 68.500(c)(2)(i) 6 and 8-Position Plug, Mechanical Specifications). A catch length greater than 1.3970 mm (.055 inch) is beneficial in providing for greater breakout strength and improved guidance when interfacing with a 6-position plug.
2. Surface Z need not be planar or coincident with the surface under the plug release catch. Surface Z projections must not prevent insertion, latching, and unlatching of the standard 8-position plug on Figure 68.500(c)(2)(i).
3. The preferred plug stop surface is indicated. If some other internal feature is used as a plug stop, it must be located so

that the axial movement of a latched plug is no greater than 1.1430 mm (.045 inch).

4. To prevent mistargeting between the plug and jack contacts, the jack contacts should be completely contained in their individual contact zones, (.7112 mm (.028 inch) max. wide), where they extend into the jack openings. There is no location requirement for jack contacts below these zones (5.8420 mm (.230 inch) max.), but adequate contact separation must be maintained to prevent electrical breakdown. These shaded contact zones should be centrally located, (include all locating tolerances), about the jack opening width 11.9126 mm (.469 inch) Ref, (Datum -W-). Contacts located outside of these zones may result in mistargeting between the jack and plug contacts.
5. All inside and outside corners in the plug cavity to be .3810 mm (.015 inch) radius max. unless specified.
6. These surfaces shall have 0°15′ maximum draft.
7. Relief inside the dotted areas on both sides of the jack opening is permitted. The 6.8326 mm (.269 inch) Ref and 11.9126 mm (.469 inch) Ref Gauge Requirements must be maintained in each of the corners indicated, (Ref. 1.5240 mm (.060 inch) min), to assure proper plug/jack interface guidance.
8. 4.0640 mm (.160 inch) and 6.2992 mm (0.248 inch) dimensions to be centrally located to jack opening width -W- within ±−. 1270 mm (.005 inch).
9. The contact lengths shall be such that the contacts will always be contained inside the guide slots, and the contacts must move freely in the slots so as not to restrain plug insertion or damage jack contacts.
10. Gauge Requirements:

GO: The jack shall be capable of accepting an 11.7856 x 6.7056 mm (.4640 x .2640 inch) gauge and the gauge shall be capable of being removed with a maximum force of 8.9 newtons (2.0 pounds).

NO GO: The jack shall not accept either a 12.0396 x 6.4516 mm (.4740 x .254 inch) horizontal width of opening gauge or a 6.9596 x 11.5824 mm (.2740 x .456 inch vertical height of opening gauge. However, if the gauge is accepted, the force necessary to remove the gauge shall be a minimum of .83 newtons (3.0 ounces).

Removal forces do not include forces contributed by contact springs nor shall external forces be applied to the jack that will affect these removal forces.

Gauges shall have a .7620 mm (.030 inch) radius on the nose and a .3810 mm (.015 inch) radius on all edges with clearance provided for contacts.

11. With no plug inserted, conductors 1 and 4 are bridged as well as conductors 5 and 8. With a miniature 8-position plug inserted into the jack, the bridge connectors are broken and a series connection can be made in both sides of the line. With a 6-position plug inserted, the bridged connections remain unbroken.
12. The jack contact/bridging interface should be hard gold to hard gold and should have a minimum gold thickness of .0012700 mm (.000050 inch) on each side of the interface. The minimum contact bridging force should be .294 N (30 grams). Any non-gold contact material must be compatible with gold and provide equivalent contact performance.

(e) *50-position miniature ribbon plug:*

(1) Contact finish in the region of contact shall be gold, .0007620 mm (.000030 inch) minimum thickness, electrodeposited hard gold preferred.[1]

(2) ''Datum B'' is the center line of contact cavities.

(3) The center line of each contact shall be located within .2286 mm (.009 inch) of true position with respect to ''Datum B''.[1]

(4) Contact width at region of contact shall be 1.1430±.0508 mm (.045±0.002 inch).[1]

(5) Center line of shell dimension indicated shall be within .1270 mm (.005 inch) of ''Datum B''.[1]

(6) Center line of barrier dimension indicated shall be within .1270 mm (.005 inch) of ''Datum B''.[1]

(7) ''Surface X'' shall have a .0001016 mm (4 microinch) finish or better; finishing shall be done in the direction of the arrow.[2]

(8) A force of not more than 178 newtons (40 pounds) shall be sufficient to fully insert the plug onto the sizing gauge shown on Figure 68.500(e)(1). The plug is fully inserted when ''Surface A'' of the plug[1] touches ''Surface A'' of the sizing gauge.

(9) After one insertion of the plug on the sizing gauge, Figure 68.500(e)(2), a force of not more than 44.5 newtons (10 pounds) shall be sufficient to fully insert the plug on the continuity gauge shown in Figure 68.500(e)(3). The plug is fully inserted on the continuity gauge when ''Surface A'' of the plug[1] touches ''Surface A'' of the continuity gauge.

(10) When the plug is fully inserted on the continuity gauge, Figure 68.500(e)(3), after having been inserted once on the sizing gauge, Figure 68.500(e)(2), all contacts of the plug shall electrically contact the continuity gauge as determined by an electrical continuity test which applies an open circuit voltage of not more than 10 volts, and will not indicate continuity if the resistance of the circuit being checked is more than 200 ohms.

[1] Figure 68.500(e)(1).

[2] Figures 68.500 (e)(2) and (e)(3).

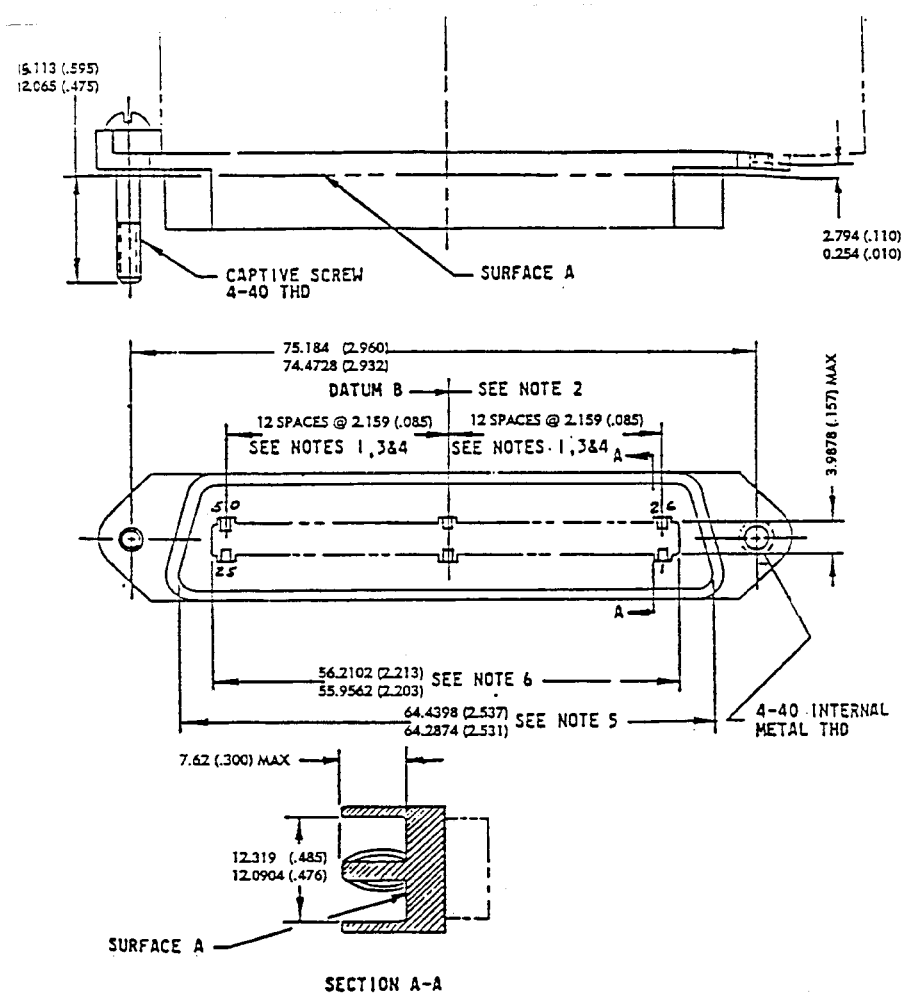


Figure 68.500(a)(1)--50 Position Miniature Ribbon Plug

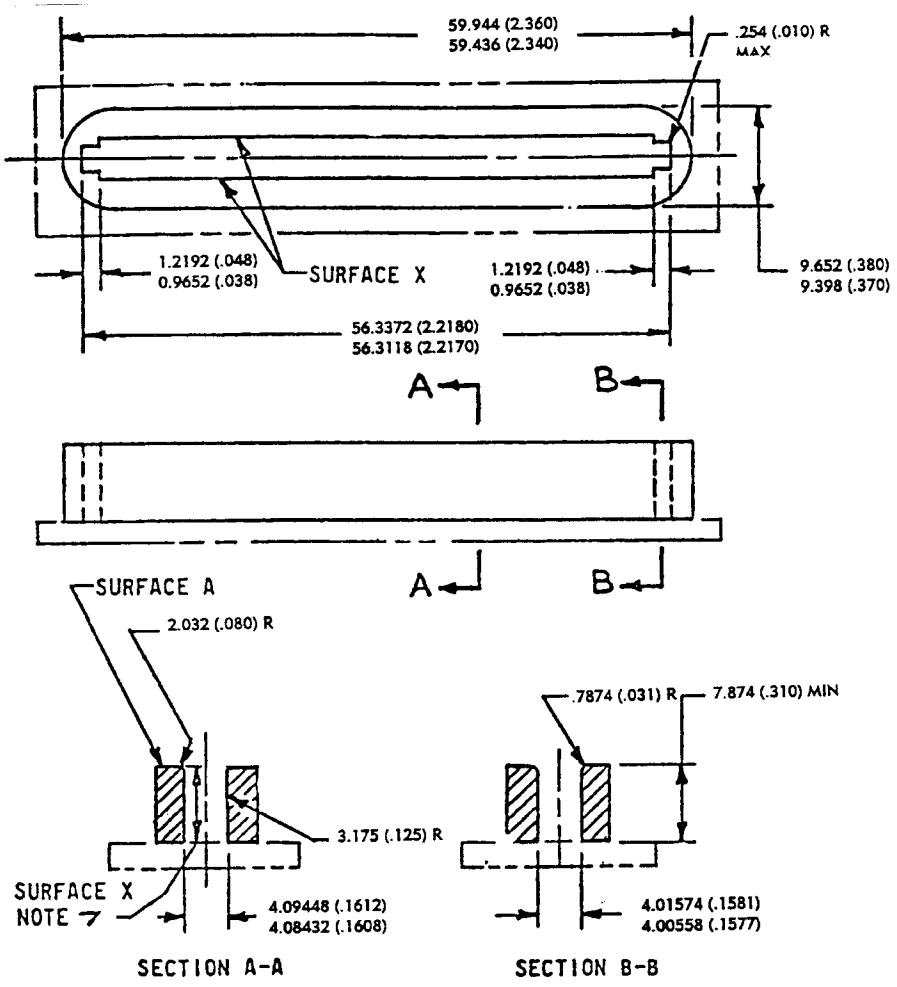


**Figure 68.500(e)(2)--50 Position Miniature Ribbon Plug Sizing Guage**

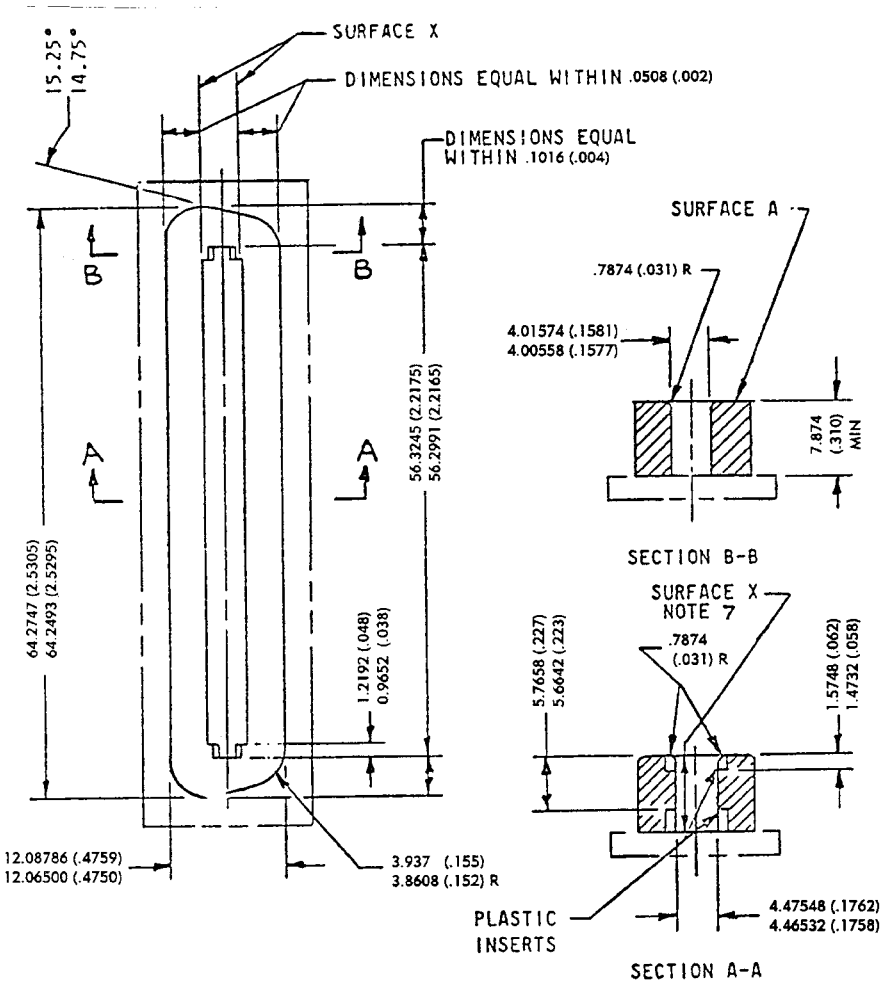


Figure 68.500(e)(3)--50 Position Miniature Ribbon Plug Continuity Guage

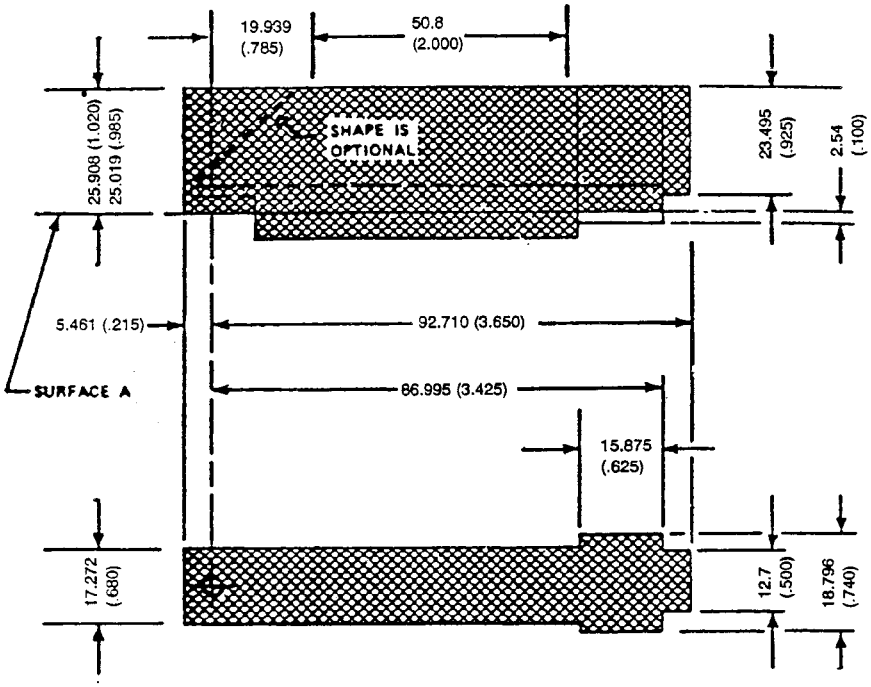


Figure 68.500(e)(4)

50-POSITION MINIATURE RIBBON PLUG - HOOD ENVELOPE

(f) *50-position miniature ribbon jack:*

(1) Contact finish in the region of contact shall be gold, .0007620 mm (.000030 inch) minimum thickness, electrodeposited hard gold preferred.[1]

(2) ''Datum B'' is the center line of contact cavities.

(3) The center line of each contact shall be located within .2286 mm (.009 inch) of true position with respect to ''Datum B''.[1]

(4) Contact width at region of contact shall be 1.1430±.0508 mm (.045±0.002 inch).[1]

(5) Center line of shell dimension indicated shall be within .1270 mm (.005 inch) of ''Datum B''.[1]

(6) Center line of cavity dimension indicated shall be within .1270 mm (.005 inch) of ''Datum B''.[1]

(7) ''Surface X'' shall have a .0001016 mm (4 microinch) finish or better; finishing shall be done in the direction of the arrow.[2]

[1] Figure 68.500(f)(1).

[2] Figures 68.500 (f)(2) and (f)(3).

(8) A force of not more than 134 newtons (30 pounds) shall be sufficient to fully insert the jack onto the sizing gauge shown on Figure 68.500(f)(2).

The jack is fully inserted when ''Surface A'' of the jack[1] touches ''Surface A'' of the sizing gauge.

(9) After one insertion of the jack on the sizing gauge, Figure 68.500(f)(2), a force of not more than 44.5 newtons (10 pounds) shall be sufficient to fully insert the jack on the continuity gauge shown in Figure 68.500(f)(3). The jack is fully inserted on the continuity gauge when ''Surface A'' of the jack[1] touches ''Surface A'' of the continuity gauge.

(10) When the jack is fully inserted on the continuity gauge, Figure 68.500(f)(3), after having been inserted once on the sizing gauge, all contacts of the jack shall electrically contact the continuity gauge as determined by an electrical continuity test which applies an open circuit voltage of not more than 10 volts, and will not indicate continuity if the resistance of the circuit being checked is more than 200 ohms.

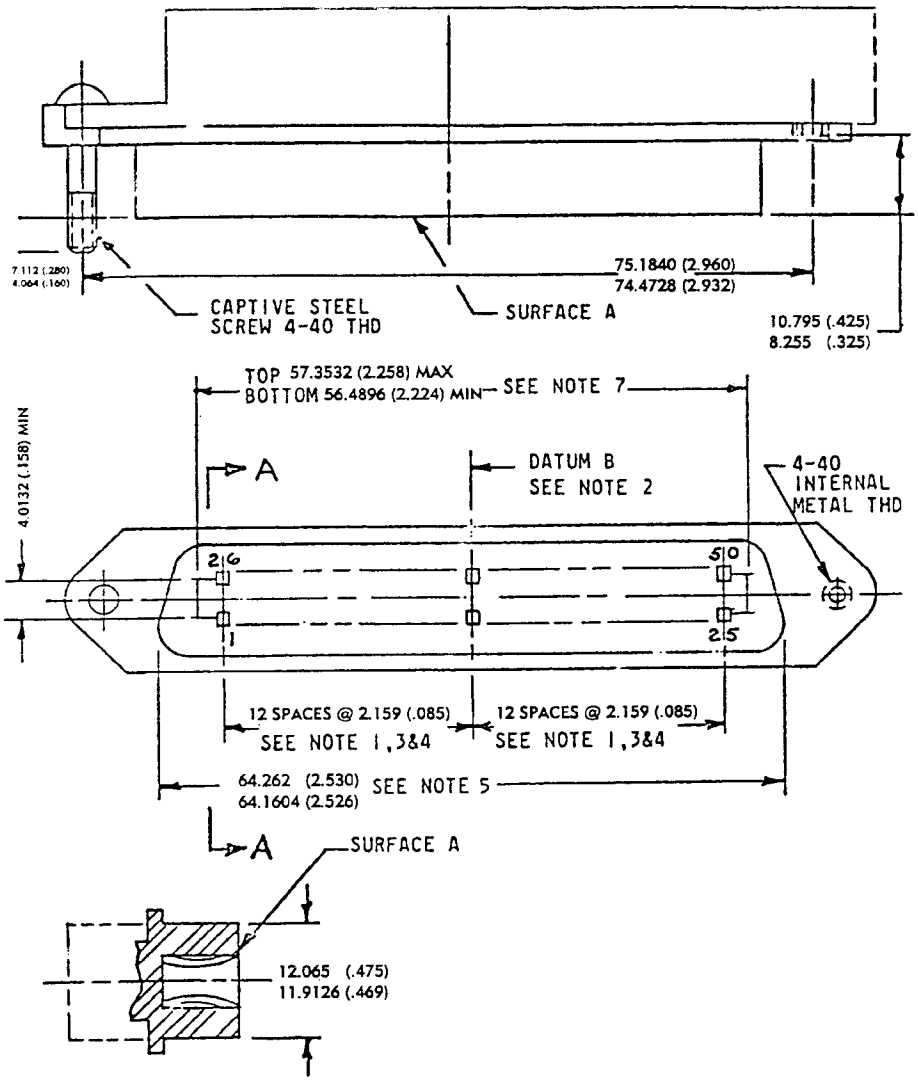


Figure 68.500(f)(1)--50 Position Miniature Ribbon Jack

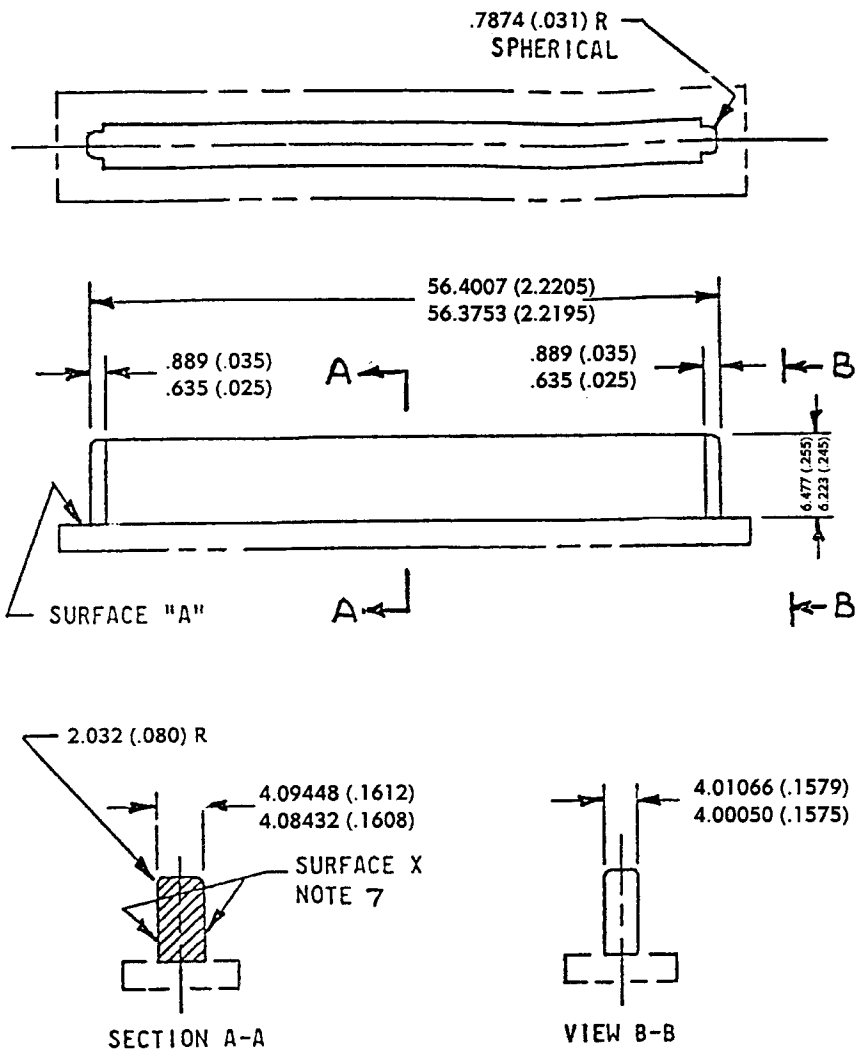


Figure 68.500(f)(2)--50 Position
Miniature Ribbon Jack
Sizing Guage

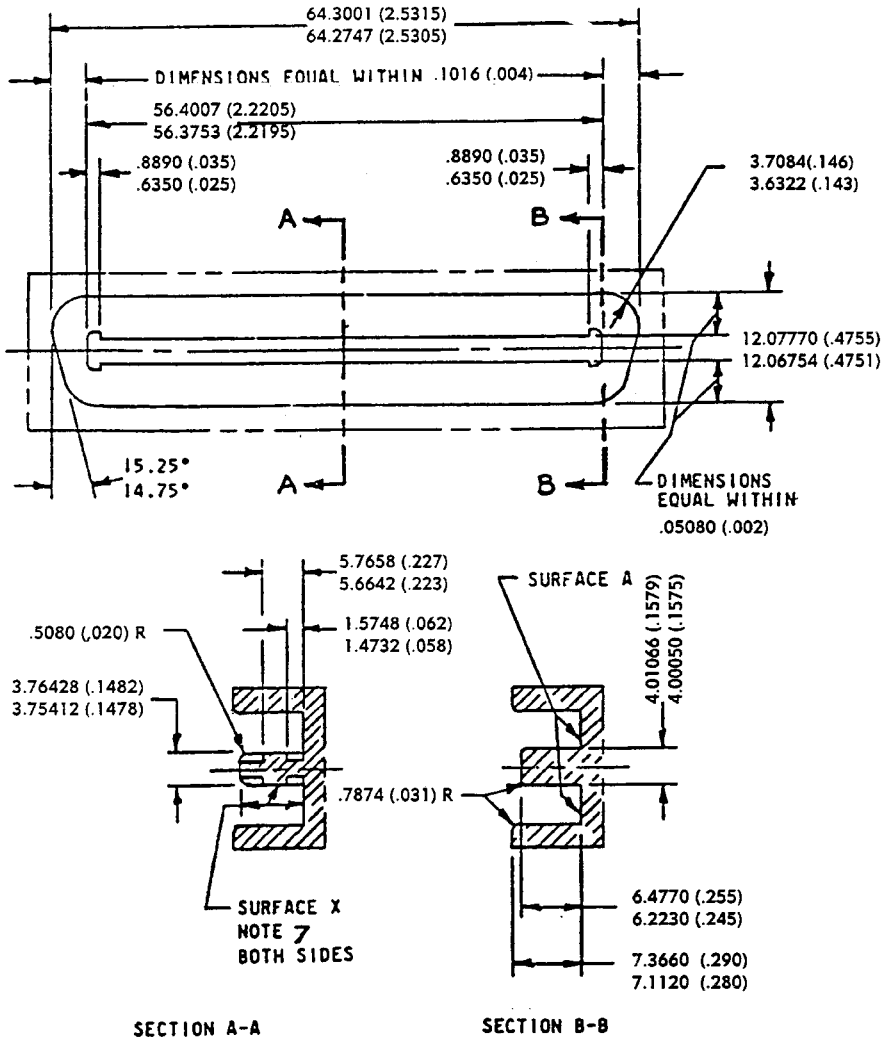


Figure 68.500(f)(3)--50 Position Miniature Ribbon Jack Continuity Gage

(g) *3-Position weatherproof plug:*

Contact blade material shall be brass, with minimum .00762 mm (.0003 inch) thick nickel plating.

NOTE: All linear dimensions are in millimeters (inches).

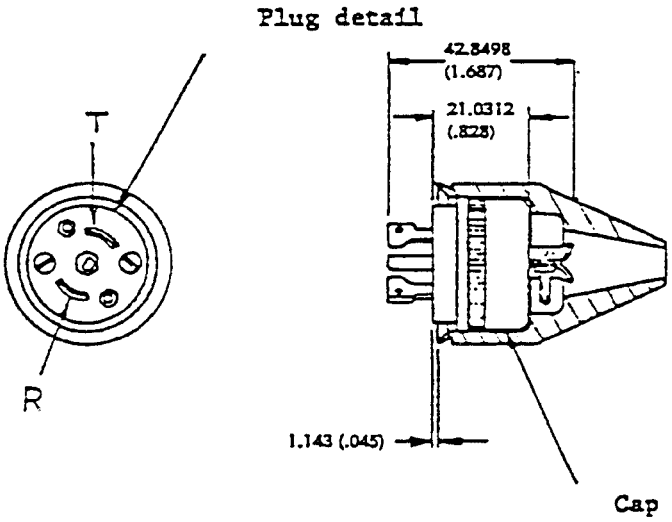


Figure 68.500(g)(1)--3 Position Plug
Plug Assembly

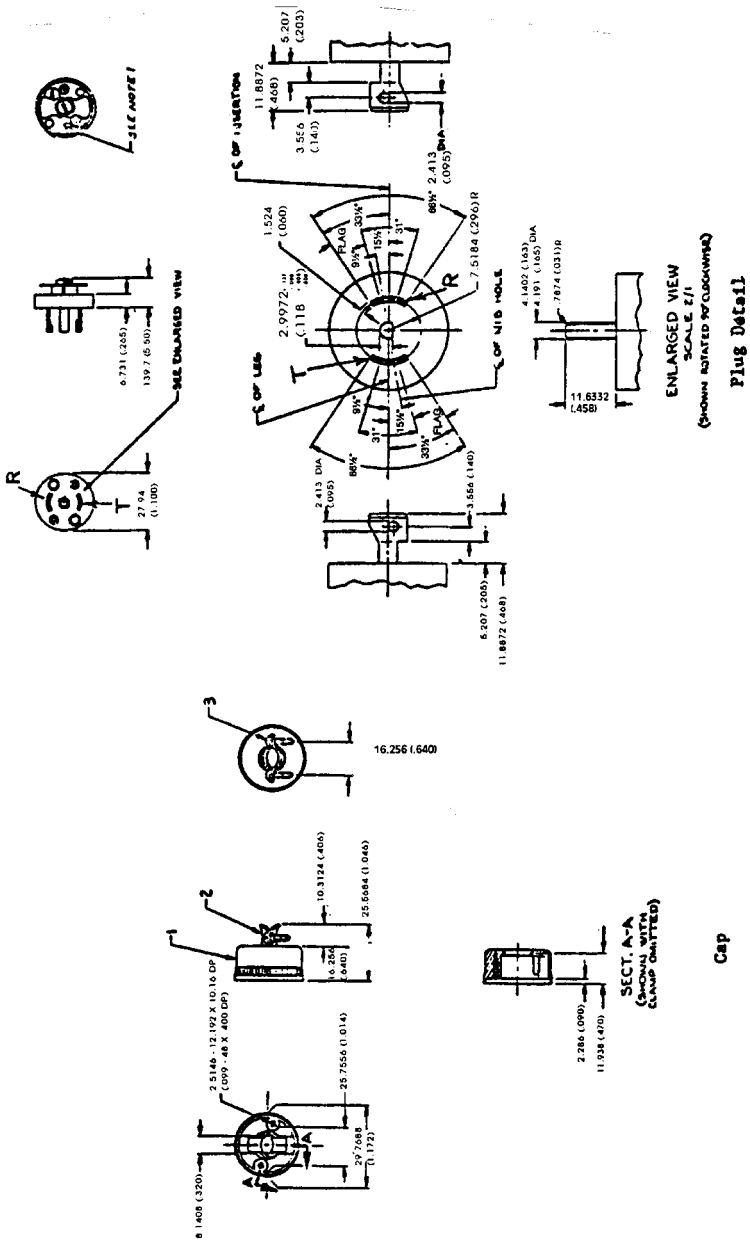


Figure 68.500(g)(2)--3 Position Plug Detail

(h) *3-Position weatherproof jack:*

Contact blade material shall be brass, with minimum .00762 mm (.0003 inch) thick nickel plating.

NOTE: All linear dimensions are in millimeters (inches).

(Note: All linear dimensions are in inches.)

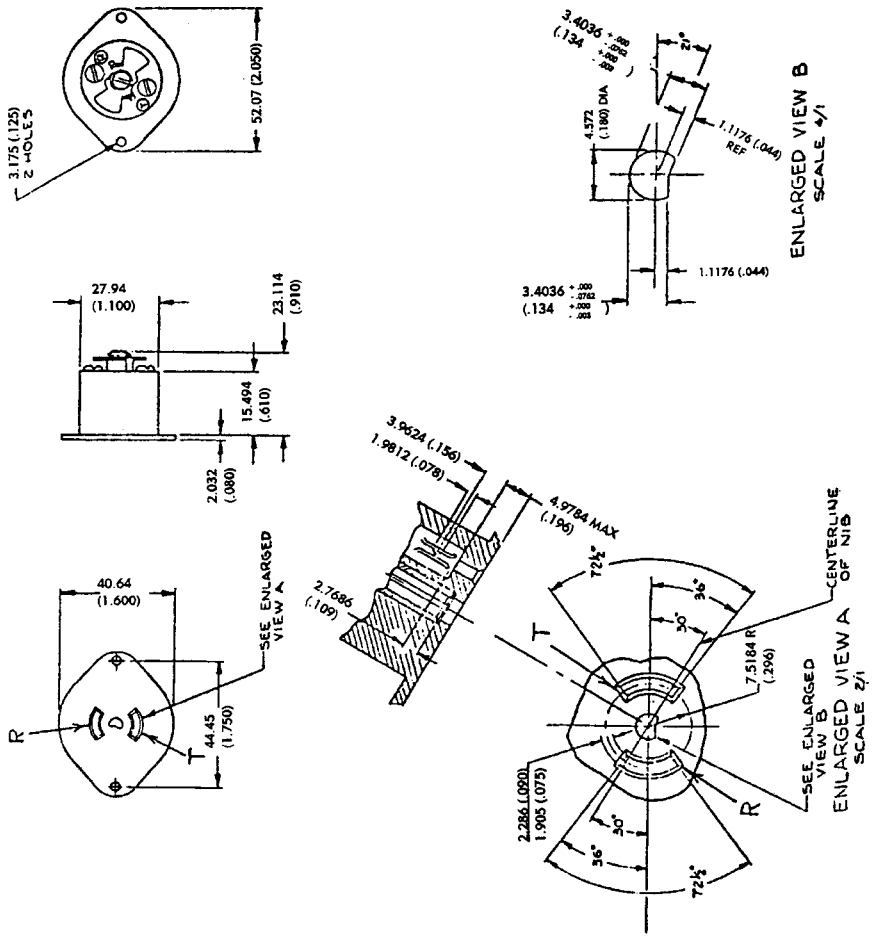


Figure 68.500(h)--3 Position Plug Detail

(Ed. 7/77)

(i) *Miniature 8-position plug, keyed:*

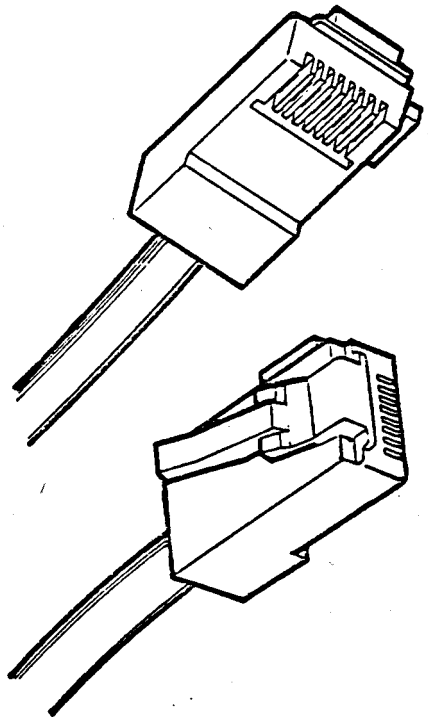

Figure 68.500(i)(1)(i)–View

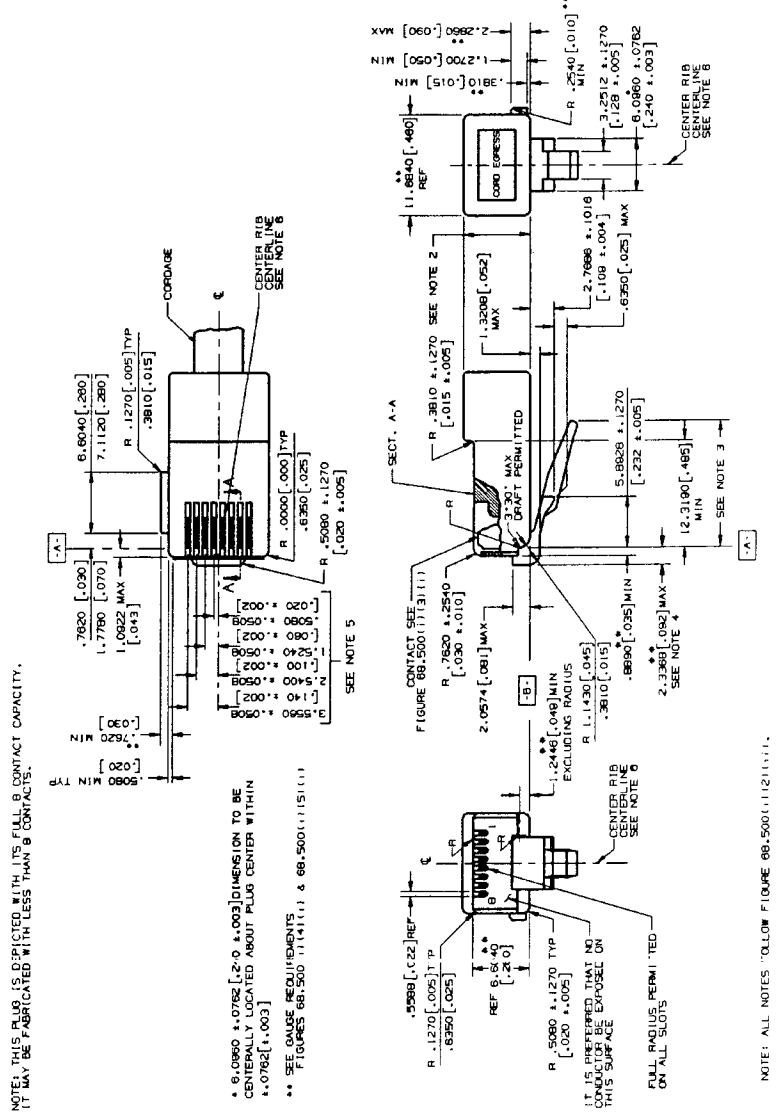


FIGURE 68.500 (1)(2)(a) - 8 POSITION KEYED PLUG, MECHANICAL SPECIFICATION

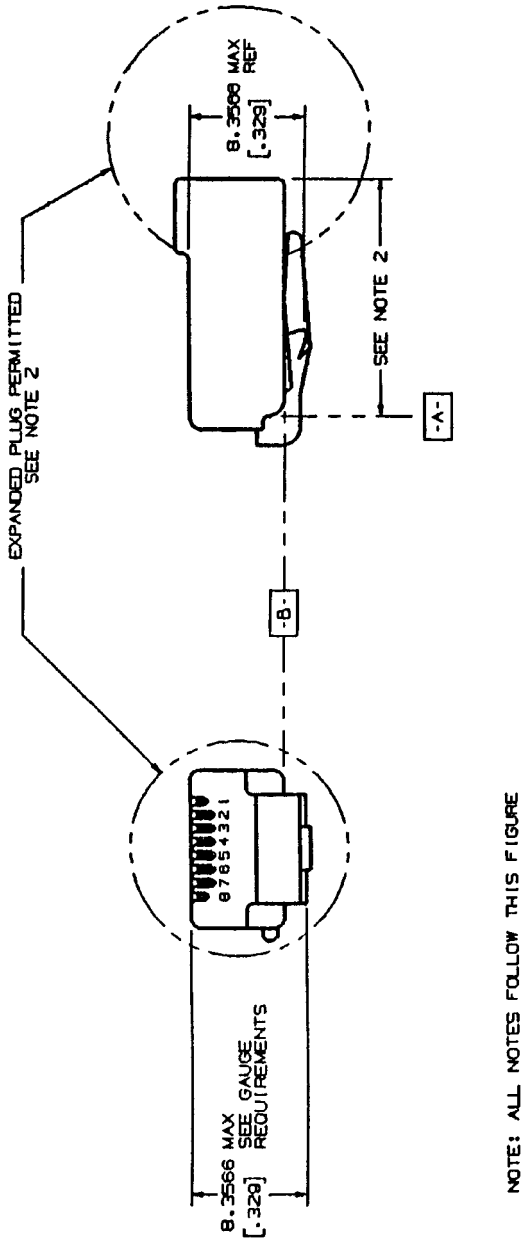


NOTE: ALL NOTES FOLLOW THIS FIGURE

FIGURE 68.500(i)(2)(ii) - 8 POSITION KEYED PLUG, MECHANICAL SPECIFICATION (CONTINUED)

NOTES: (Notes apply to Figures 68.500(i)(2) (i) and 68.500(i)(2)(ii))

1. All plugs must be capable of meeting the requirements of the plug go and no-go gauges.

2. The standard plug height in the area shown is 8.0010 mm (.315 inch) maximum. The standard plug length is 23.1140 mm (.910 inch) maximum. Plugs may be made longer than standard or adapted for direct use on special cords, adapters without cordage, apparatus or equipment subject to the limitations described in the introductory paragraphs of 68.500. Plugs longer and/or higher than standard may inhibit the special features of some network jack enclosures.
3. A 14.6050 mm (.575 inch) minimum tab length is required. It is preferred that maximum tab length be no longer than 15.8750 mm (.625 inch). Longer tabs may be used with the same limitations described in Note 2.
4. To obtain maximum plug guidance in jacks, it is desirable to extend the front plug nose to the 2.3368 mm (.092 inch) maximum.
5. These dimensions apply to the location of jack contact receiving slots. It is desirable that plug contacts be centered axially in these slots, but centering is not required.
6. The center rib centerline shall be coincident with the plug width, 11.6840 mm ref (.460 inch ref.) center line within ± .0762 mm (± .003 inch).

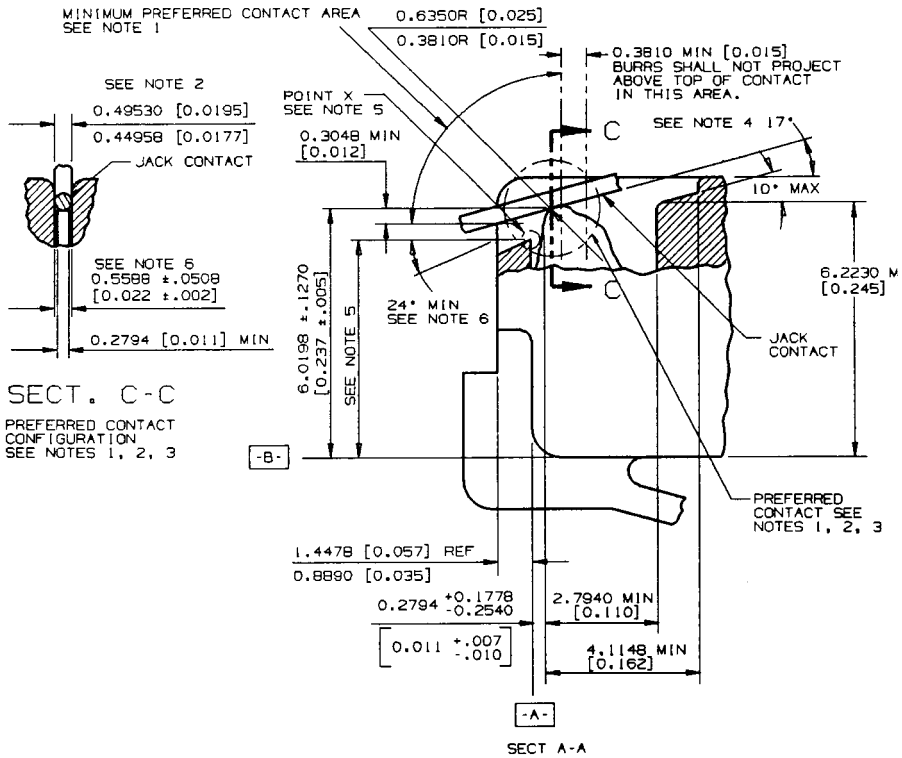


NOTE: ALL NOTES FOLLOW THIS FIGURE.

NOTE: THE 6 POSITION PLUG/JACK CONTACT SPECIFICATION IS IDENTICAL.

FIGURE 68.500(i)(3)(ii)- 8 POSITION KEYED PLUG
PLUG /JACK CONTACT SPECIFICATION

NOTES: (Notes apply to Figure 68.500(i)(3)(i))

1. The plug/jack contact interface should be hard gold to hard gold and should have a minimum gold thickness of .0012700mm (.000050 inch) on each side of the interface. The minimum contact force should be .98 N (100 grams). Any non-gold contact material must be compatible with gold and provide equivalent contact performance. A smooth, burr-free surface is required at the interface in the area shown.
2. The jack contact design is based upon .4572 mm (.018 inch) spring temper phosphor bronze round wire in the modular plug blade and jack contact interface. Other contact configurations that provide contact performance equal to or better than the preferred configurations and do not cause damage to the plug or jack are permitted. The preferred jack contact width is .44958/.49530 mm (.0177/.0195 inches). Deviations from the preferred jack contact width are permitted for round contacts as well as noncircular cross sectional shapes but they must be compatible with existing plug configurations. The requirements of Note 1 apply to all possible contact areas.
3. The configuration of the plug contact and the front plastic of the plug should prevent jack contacts from being damaged during plug insertion into jacks.
4. This is the suggested nominal contact angle between plugs and jacks with the plug latched into the jack. If this angle becomes greater than 24 degrees loss of electrical contact may occur between the plug and jack. If the nominal contact angle becomes less than 13 degrees, interference between jack contacts and the internal plastic in the plug may occur.
5. To avoid loss of electrical contact, the preferred dimension from ''Datum B'' to the highest point ''X'' should be 5.0800 mm (.200 inch) max. A dimension greater than 5.3594 mm (.211 inch) may result in loss of electrical contact between plugs and jacks. The 5.3594 mm (.211 inch) max. shall be considered an absolute maximum.
6. The 25 degree min. angle applies only to plugs with front plastic walls higher than 4.8260 mm (.190 inches).

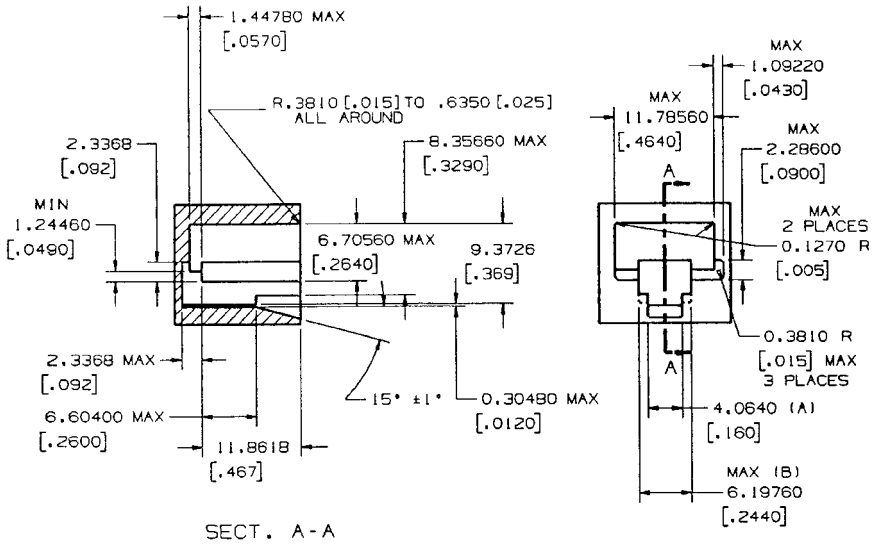


GO GAUGE

NOTES:

1. THE PLUG SHALL BE CAPABLE OF INSERTION AND LATCHING INTO THE GAUGE WITH 22.24 newtons [5 POUNDS] OR LESS INSERTION FORCE. PLUG LATCHING BAR SHALL BE DEPRESSED SO AS NOT TO INTERFERE WITH THE PLUG ENTRY. AFTER INSERTION AND LATCHING, PLUG SHALL BE CAPABLE OF REMOVAL, WITH THE LATCH DEPRESSED, WITH A REMOVAL FORCE OF 44.48 newtons [10 POUNDS] OR LESS APPLIED AT AN ADVANTAGEOUS ANGLE.

2. DIMENSIONS GIVEN TO FOUR DECIMAL PLACES SHALL BE WITHIN ±.0508mm [.002].

3. DIMENSIONS (A) AND (B) TO BE CENTRALLY LOCATED WITH RESPECT TO 11.78560mm [.4640] MAX. JACK OPENING WIDTH WITHIN ±.0254mm[.001].

4. DO NOT SCALE DRAWINGS FOR EXTERNAL CONFIGURATION.

FIGURE 68.500(i)(4)(i)-8 POSITION KEYED PLUG
MAXIMUM PLUG SIZE

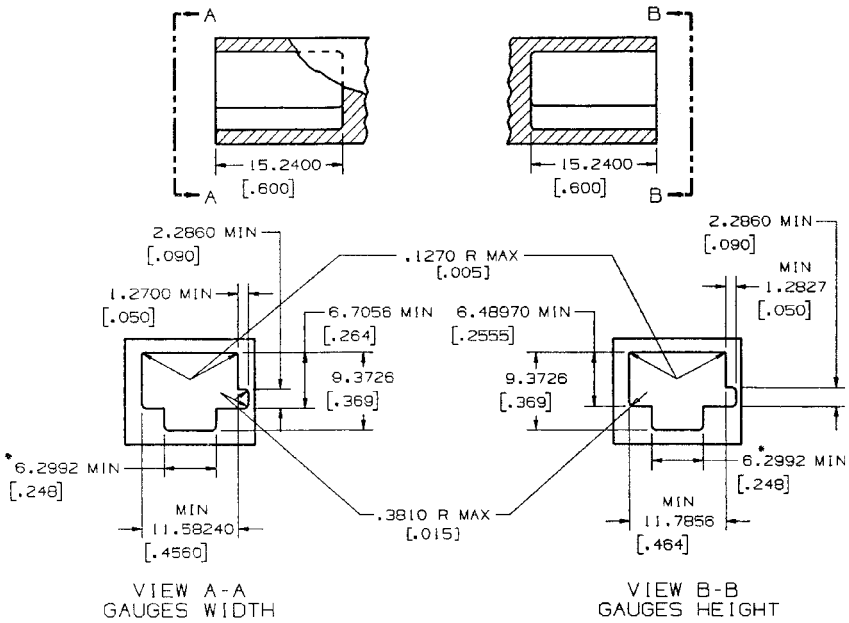


NO-GO GAUGE

NOTES:

1. THE PLUG SHALL NOT BE CAPABLE OF ENTERING THE GAUGE MORE THAN 1.7780mm [.070] BEYOND DATUM-A- (SEE FIGURE 68.500(j)(2)(i) WITH 8.90 newton [2.0 POUNDS] INSERTION FORCE.
2. NON-TOLERANCED DIMENSIONS GIVEN TO FOUR PLACES SHALL BE WITHIN ±.0508mm [.002] .
3. *6.2992mm [.248] DIMENSION TO BE CENTRALLY LOCATED WITH RESPECT TO 11.7856mm [.464] MINIMUM AND 11.58240mm [.4560] MINIMUM WITHIN ±.0508mm [.002] .

FIGURE 68.500(j)(5)(i)-8 POSITION KEYED PLUG, MINIMUM PLUG SIZE

(j) *Miniature 8-position keyed jack:*

Figure 68.500(j)(1)--View

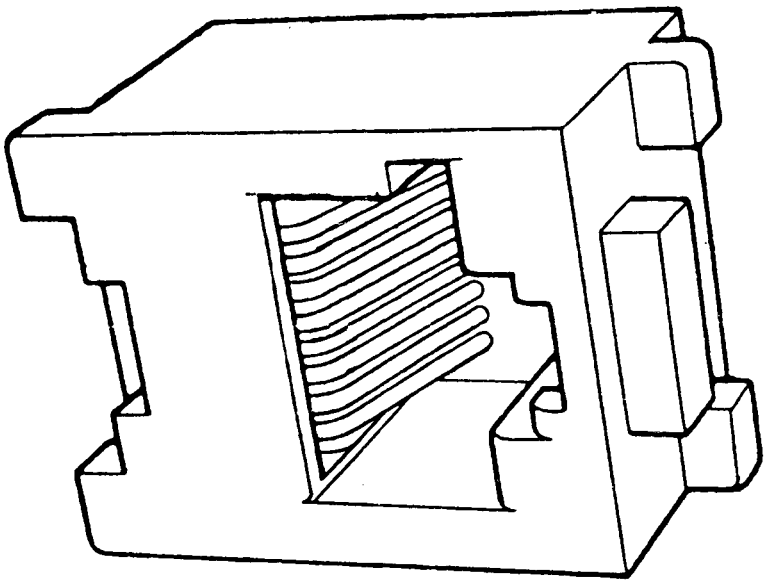

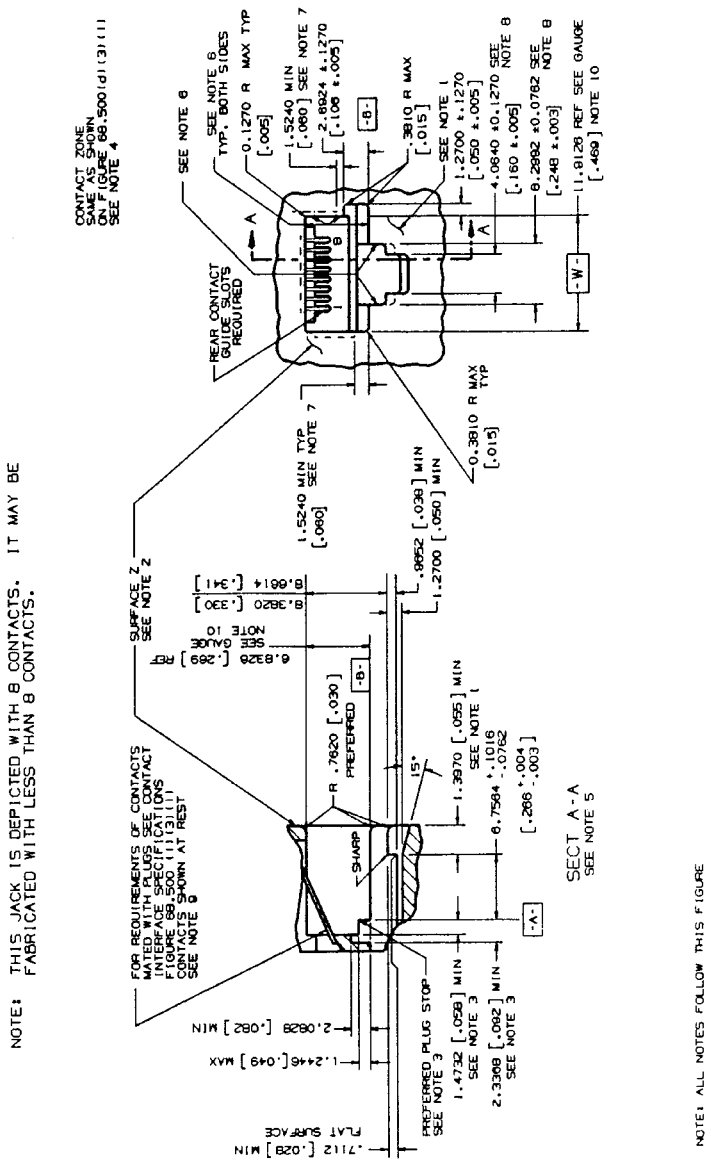


FIGURE 68.500(j)(2)(i)-8 POSITION KEYED JACK MECHANICAL SPECIFICATION

NOTES: (Notes apply to Figure 68.500(j)(2)(i))

1. Front surface projections beyond the 1.3970 mm (.055 inch) minimum shall be configured so as not to prevent finger access to the plug release catch (Reference Figure 68.500(i)(2)(ii) and 8-Position Plug, Mechanical Specifications). A catch length greater than 1.3970 mm (.055 inch) is beneficial in providing for greater breakout strength and improved guidance when interfacing with a 6-position plug.

2. Surface Z need not be planar or coincident with the surface under the plug release catch. Surface Z projections must not prevent insertion, latching, and unlatching of the standard 8-position plug on Figure 68.500(i)(2)(i).
3. The preferred plug stop surface is indicated. If some other internal feature is used as a plug stop, it must be located so that the axial movement of a latched plug is no greater than 1.1430 mm (.045) inch.
4. To prevent mistargeting between the plug and jack contacts, the jack contacts should be completely contained in their individual contact zones, (.7112 mm (.028 inch) max wide), where they extend into the jack openings. There is no location requirement for jack contacts below these zones (5.8420 mm (.230 inch) max), but adequate contact separation must be maintained to prevent electrical breakdown. These shaded contact zones should be centrally located, (include all locating tolerances), about the jack opening width 11.9126 mm (.469 inch) Ref, (Datum–W–). Contacts located outside of these zones may result in mistargeting between the jack and plug contacts.
5. All inside and outside corners in the plug cavity to be .3810 mm (.015 inch) radius max unless specified.
6. These surfaces shall have 0°15′ maximum draft.
7. Relief inside the dotted areas on both sides of the jack opening is permitted. The 6.8326 mm (.269 inch) Ref and 11.9126 mm (.469 inch) Ref Gauge Requirements must be maintained in each of the corners indicated, (Ref. 1.5240 mm (.060 inch) min), to assure proper plug/jack interface guidance.
8. 4.0640 mm (.160 inch) and 6.2992 mm (.248 inch) dimensions to be centrally located to jack opening width –W– within ±.1270 mm (.005).
9. The contact lengths shall be such that the contacts will always be contained inside the guide slots and the contacts must move freely in the slots so as not to restrain plug insertion or damage jack contacts.
10. Gauge Requirements:

GO: The jack shall be capable of accepting and 11.78560 × 6.70560 mm (.4640 × .2640 inch) gauge and the gauge shall be capable of being removed with a maximum force of 8.9 newtons (2.0 pounds).

NO GO: The jack shall not accept either a 12.03960 × 6.4516 mm (.4740 × .254 inch) horizontal width of opening gauge or a 6.95960 × 11.5824 mm (.2740 × .456 inch) vertical height of opening gauge. However, if the gauge is accepted, the force necessary to remove the gauge shall be minimum of .83 newtons (3.0 ounces).

Removal forces do not include forces contributed by contact springs nor shall external forces be applied to the jack that will affect these removal forces.

Gauges shall have a .7620 mm (.030 inch) radius on the nose and a .3810 mm (.015 inch) radius on all edges with clearance provided for contracts.

[41 FR 28699, July 12, 1976, as amended at 45 FR 52151, Aug. 6, 1980; 50 FR 27251, July 2, 1985; 58 FR 44907, Aug. 25, 1993; 62 FR 36465, July 8, 1997]

## § 68.502 Configurations.

This section describes connection configurations which telephone subscribers may request their local telephone company to provide, in accordance with § 68.104 of these rules. In the absence of a request for a specific jack configuration, the telephone company shall install the standard jack depicted in § 68.502(a)(1). The listed configurations are for connections to be made by the telephone company to the standard jacks specified in this subpart. Plugs on registered terminal equipment and registered protective circuitry shall be wired so as to be compatible with the jack connections specified herein. The following nomenclature is used in this section:

T/R—Connections to the ''tip'' and ''ring'' wires of a telephone communications line, trunk, channel or facility.

A/A1—Connections to the ''hold'' functions of key telephone systems which use such connections. In such systems, the ''A'' lead corresponding to a particular telephone line is shorted to the ''A1'' lead when that line is placed in the ''off-hook'' state to permit proper operation of the ''hold'' functions associated with that line.

MB/MB1—Connections to leads implementing a make-busy feature where required. The MB lead is shorted by the terminal equipment to the MB1 lead when the corresponding telephone line is to be placed in an unavailable, or artificially busy condition.

Bridged—A bridged connection is a parallel connection.

Data—Data configurations are those which use jacks incorporating components to limit signal power levels of data equipment. Data equipment with a maximum signal power output of −9 dBm may be connected to other than data configurations. *See* § 68.308 of these rules.

A ''USOC'' (Universal Service Ordering Code) is specified for each configuration. These USOCs are generic telephone company service ordering codes. If a telephone subscriber wishes to

have the telephone company install a standard jack other than the one depicted in §68.502(a)(1) below, he shall specify the appropriate USOC when requesting the installations.

(a) *Bridged configurations other than data; single line connections*—(1) *Bridged T/R; 6-position jack.*

ELECTRICAL NETWORK CONNECTION: Single line bridged tip and ring only—Conductors 1, 2, 5 and 6 are reserved for telephone company use.

UNIVERSAL SERVICE ORDER CODE (USOC): RJ11W for Portable Wall-Mounted equipment—RJ11C all others.

MECHANICAL ARRANGEMENT: Miniature 6 position jack.

TYPICAL USAGE: Single line non-key telephone, ancillary devices, PBXs and key telephone systems.

WIRING DIAGRAM:

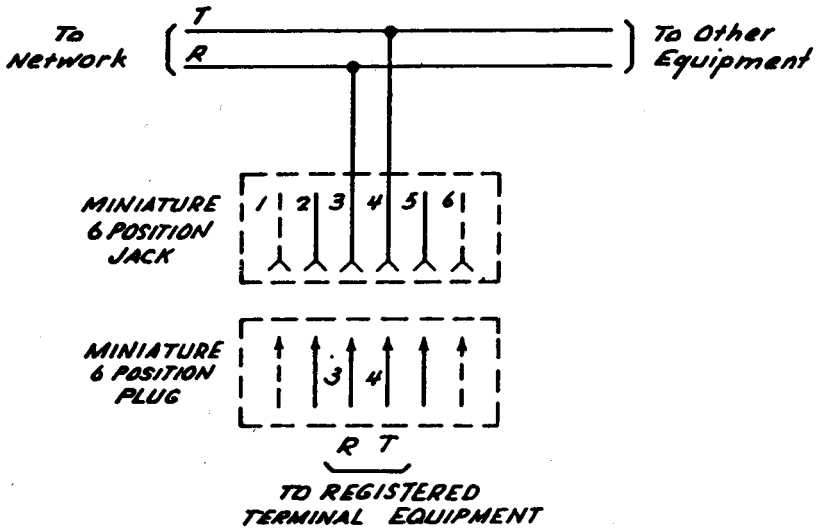


(2) *Bridged T/R; 3-position weatherproof jack.*

ELECTRICAL NETWORK CONNECTION: Single line bridged tip and ring.

UNIVERSAL SERVICE ORDER CODE: RJ15C.

MECHANICAL ARRANGEMENT: 3 position weatherproof jack.

TYPICAL USAGE: Providing telephone service to boats in marinas.

WIRING DIAGRAM:

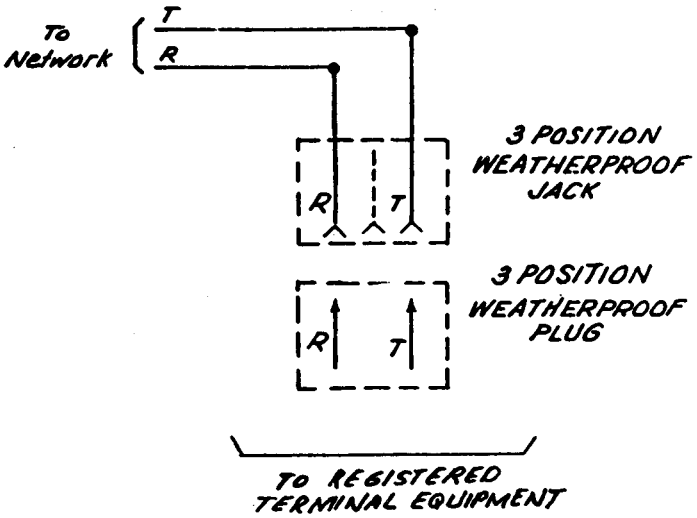


(3) *Bridged T/R with make-busy arrangement; 6-position jack.*

ELECTRICAL NETWORK CONNECTION: Single-line bridged tip and ring only with MB/MB1 leads. Conductors 2 and 5 are reserved for telephone company use.

UNIVERSAL SERVICE ORDER CODE (USOC): RJ18W for portable wall-mounted equipment—RJ18C for all others.

MECHANICAL ARRANGEMENT: Miniature 6-position jack.

TYPICAL USAGE: Single-line non-key telephone and ancillary devices connected directly to central office lines, where a make-busy requirement is needed.

WIRING DIAGRAM:

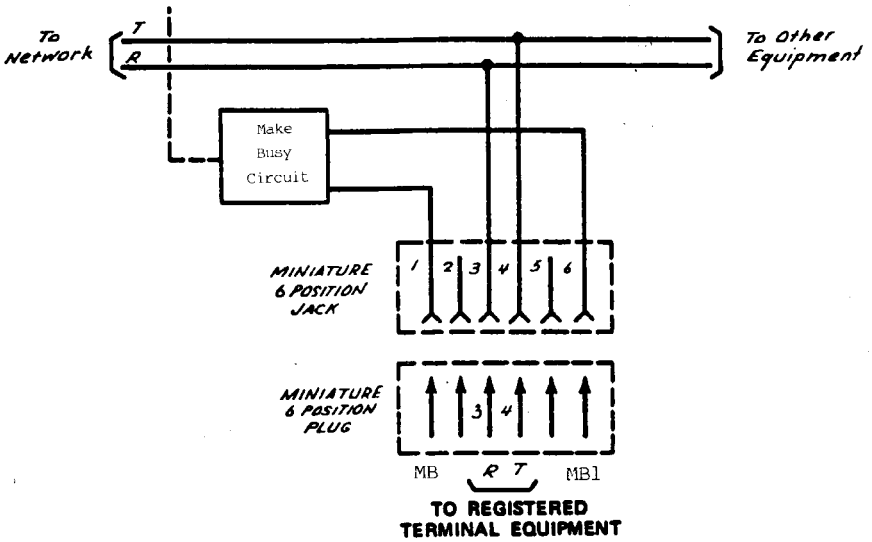


(b) *Series configurations*—(1) *Series T/R ahead of all station equipment; 8-position series jack.*

ELECTRICAL NETWORK CONNECTION: Series tip and ring ahead of all station equipment. Conductors 2, 3, 6 and 7 are reserved for telephone company use.

UNIVERSAL SERVICE ORDER CODE (USOC): RJ31X.

MECHANICAL ARRANGEMENT: Miniature 8 position series jack.

TYPICAL USAGE: Alarm reporting devices.

WIRING DIAGRAM:

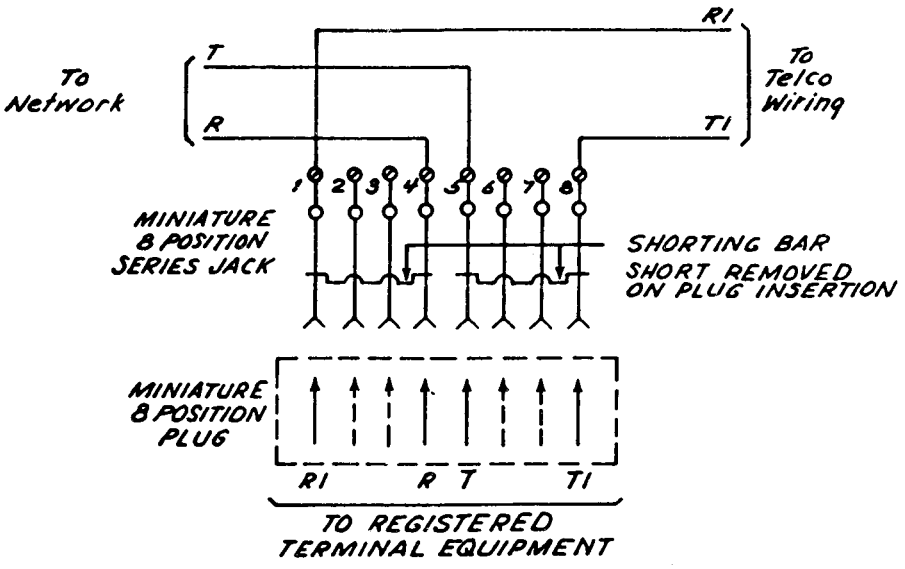


(2) [Reserved]

(3) *Series single-line tip and ring ahead of all station equipment; 8-position series jack equipped with continuity circuit.*

ELECTRICAL NETWORK CONNECTION: Series tip and ring ahead of all station equipment with continuity circuit. Conductors 3 and 6 are reserved for telephone company use.

UNIVERSAL SERVICE ORDER CODE (USOC): RJ38X.

MECHANICAL ARRANGEMENT: Miniature 8-position series jack.

TYPICAL USAGE: Alarm reporting devices.

WIRING DIAGRAM:

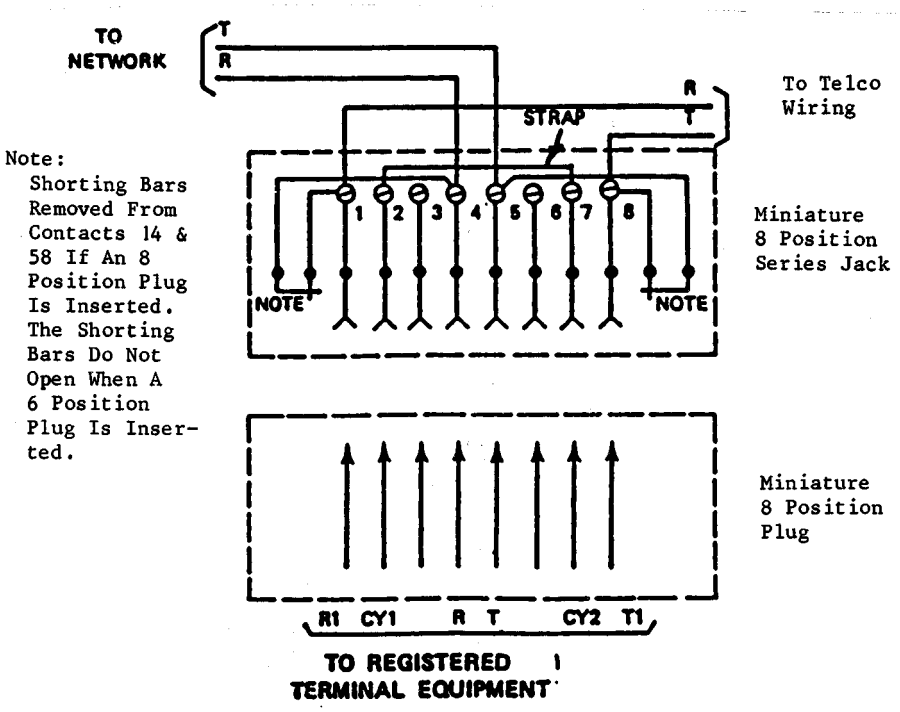


(c) *Two-line configurations*—(1) *Bridged T/R; 6-position jack.*

ELECTRICAL NETWORK CONNECTION: Two line bridged tip and ring.

UNIVERSAL SERVICE ORDER CODE (USOC): RJ14W for Portable Wall-Mounted equipment—RJ14C for all others.

MECHANICAL ARRANGEMENT: Miniature 6-position jack.

TYPICAL USAGE: Two line non-key telephone sets and ancillary devices.

WIRING DIAGRAM:

NOTE: The telephone company will wire the lines to the jack in the sequence designated by the customer.

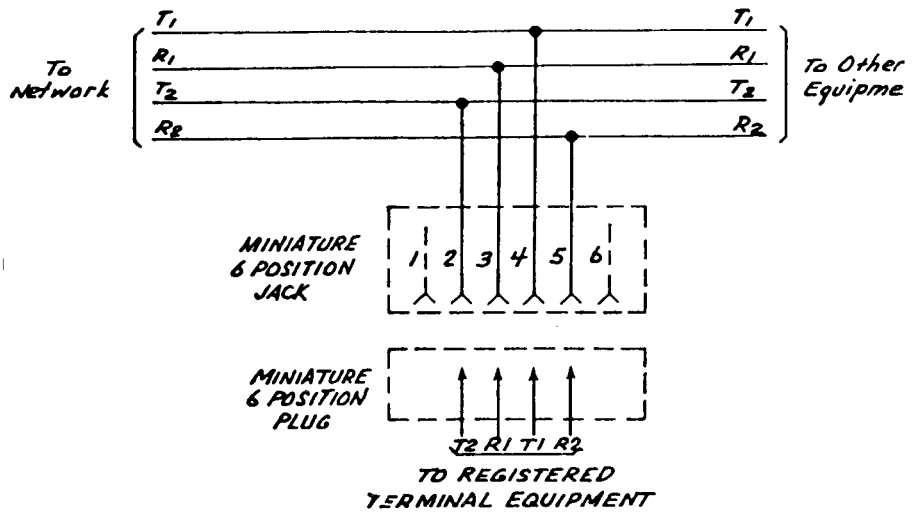


(d) *Multiple-line bridged configurations*—(1) *Up to 25 bridged T/R; 50-position jack.*

ELECTRICAL NETWORK CONNECTION: Multiple line bridged tip and ring.

UNIVERSAL SERVICE ORDER CODE (USOC): RJ21X.

MECHANICAL ARRANGEMENT: 50-position miniature ribbon jack.

TYPICAL USAGE: Traffic data recording systems, PBXs and key telephone systems.

WIRING DIAGRAM:

NOTE: At the time the jack is ordered the customer must specify the sequence in which the central office lines are to be connected to the jack. The telephone company will consecutively wire these lines to the jack as shown below without skipping any positions.

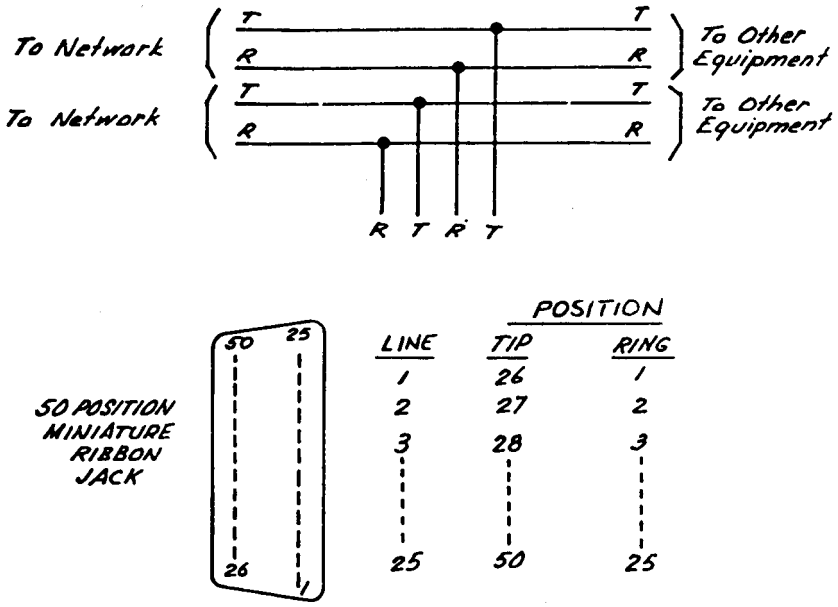


(2) *Bridged multiple-line 50-position T/R with make-busy arrangement.*

ELECTRICAL NETWORK CONNECTION: Multiple line bridge tip and ring with MB/MB1 leads for make-busy indication.

UNIVERSAL SERVICE ORDERING CODE (USOC): RJ2MB.

MECHANICAL ARRANGEMENT: 50-position miniature ribbon jack.

TYPICAL USAGE: 2–12 non-key telephone and ancillary devices connected directly to central office lines where a make-busy requirement is needed.

WIRING DIAGRAM:

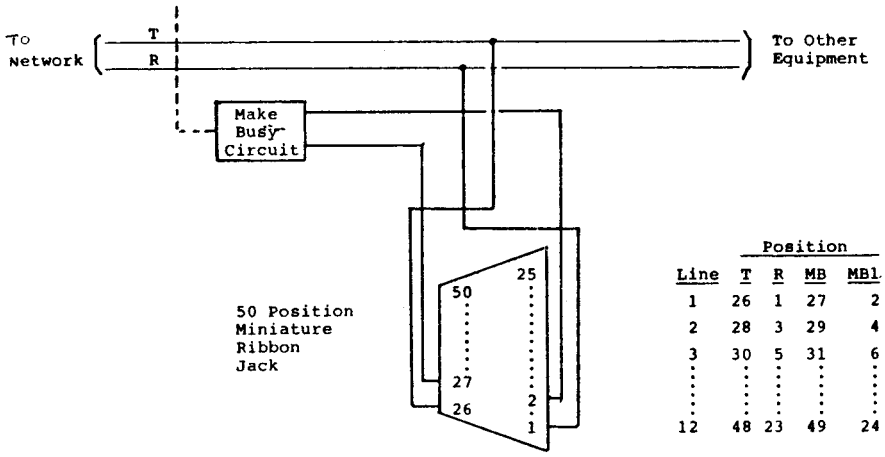

(e) *Data configurations.* There are two categories of data configurations, which may be implemented either on an 8 position keyed data jack, or on a 50 position unkeyed ribbon jack. These are: a ''universal'' configuration, which incorporates both a programming resistor (for programmed data signal power limiting) and an attenuator (for ''fixed-loss loop'' data signal power limiting), and a ''programmed'' configuration, which incorporates a programming resistor, but not an attenuator. The programming resistor is selected as follows:

The proper programming resistor (Rp) shall be selected by the telephone company at the time of installation based upon the loop loss of the telephone line to arrive at the optimum signal power level of −12 dBm at the central office. The table shown below gives the required signal power output for the programmed data equipment for each value of the programming resistor.

| Programming Resistor (Rp)* | Programmed Data Equipment Signal Power Output** |
|---|---|
| short | 0 dbm |
| 150 ohms | −1 dbm |
| 336 ohms | −2 dbm |
| 569 ohms | −3 dbm |
| 866 ohms | −4 dbm |
| 1,240 ohms | −5 dbm |
| 1,780 ohms | −6 dbm |
| 2,520 ohms | −7 dbm |
| 3,610 ohms | −8 dbm |
| 5,490 ohms | −9 dbm |
| 9,200 ohms | −10 dbm |
| 19,800 ohms | −11 dbm |
| open | −12 dbm |

*Tolerance of Rp is ± 1%.
**Tolerance of programmed data equipment signal power output is ± 1 dB.

The voltages impressed on resistor Rp by the data equipment shall be such as not to cause power dissipation in Rp in excess of 50 milliwatts.

The circuit shown below was used in calculating values of the programming resistors and may be useful in implementing the automatic control of signal power output in the programmed data equipment.

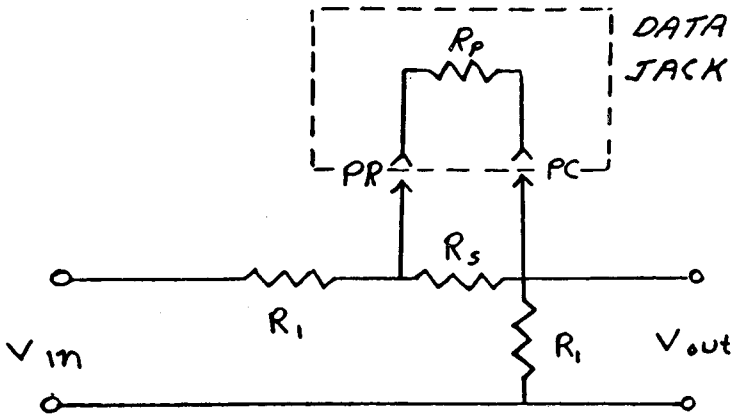


R1 is the source impedance for the input signal Vin, and also the terminating impedance of the load. $R_S$ is a series resistance, on which the computation of the programming resistor Rp is based. The table of values of Rp is derived for $R_1$=600 ohms; $R_S$=3600 ohms.

In ''universal'' configurations, the proper attenuator shall be installed or adjusted by the telephone company at the time of installation, based upon the loop loss of the telephone line, to arrive at the optimum power level of −12 dBm at the central office, with a data device maximum signal power level of −4 dBm.

The switch which is incorporated in ''universal'' configurations shall be operated to the position appropriate for the type of data equipment which is connected.

(1) *Bridged T/R; 8-position keyed data jack—Universal.*

ELECTRICAL NETWORK CONNECTION: Single line bridged tip and ring.

UNIVERSAL SERVICE ORDER CODE: RJ41S.

MECHANICAL ARRANGEMENT: Single miniature 8-position keyed jack for surface mounting.

TYPICAL USAGE: Universal jack for fixed loss loop (FLL) or programmed (P) types of data equipment.

WIRING DIAGRAM:

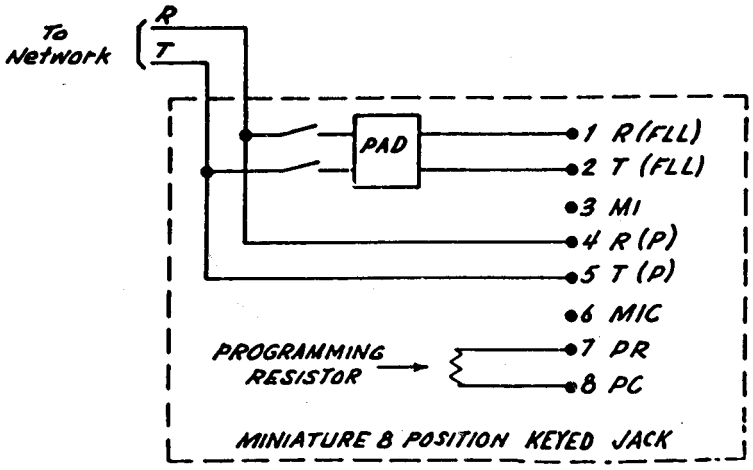


(2) *Bridged T/R; 8-position keyed data jack—Programmed.*

ELECTRICAL NETWORK CONNECTION: Single line bridged tip and ring.

UNIVERSAL SERVICE ORDER CODE: RJ45S.

MECHANICAL ARRANGEMENT: Single miniature 8-position keyed jack for surface mounting.

TYPICAL USAGE: Programmed data equipment.

WIRING DIAGRAM:

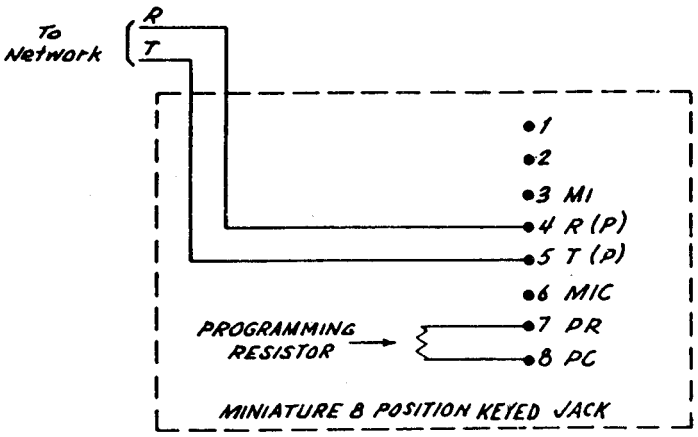

(3) *Multiple bridged T/R; 8-position keyed data jack—Universal.*

ELECTRICAL NETWORK CONNECTION: Multiple line bridged tip and ring.
UNIVERSAL SERVICE ORDER CODE: RJ41M.
MECHANICAL ARRANGEMENT: Up to 8 miniature 8-position keyed jacks in multiple mounting arrangement.
TYPICAL USAGE: Multiple installations of fixed loss loop or programmed types of data equipment.
WIRING DIAGRAM: Multiple arrangement of § 68.502(e)(1).

(4) *Multiple bridged T/R; 8-position keyed data jack—Programmed.*

ELECTRICAL NETWORK CONNECTION: Multiple line bridged tip and ring.
UNIVERSAL SERVICE ORDER CODE: RJ45M.
MECHANICAL ARRANGEMENT: Up to 8 miniature 8-position keyed jacks in multiple mounting arrangement.
TYPICAL USAGE: Multiple installations of programmed types of data equipment.
WIRING DIAGRAM: Multiple arrangement of § 68.502(e)(2).

(5) *Bridged T/R; 50-position ribbon jack—Universal.*

ELECTRICAL NETWORK CONNECTION: Single or multiple line bridged tip and ring.
UNIVERSAL SERVICE ORDER CODE: RJ26X.
MECHANICAL ARRANGEMENT: 50-position miniature ribbon jack.
TYPICAL USAGE: Universal jack for fixed loss loop (FLL) or programmed (P) types of data equipment.
WIRING DIAGRAM:

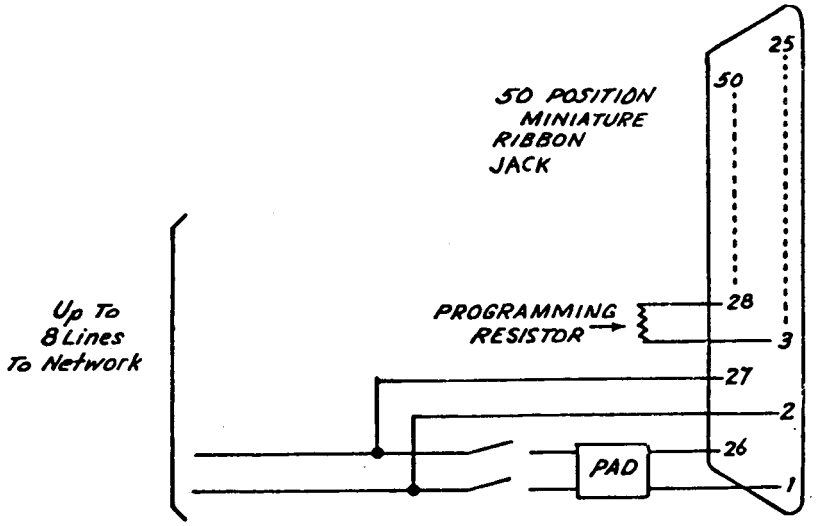


| Line | Position | | | | | |
|---|---|---|---|---|---|---|
| | FLL | | P | | PR | PC |
| | T | R | T | R | | |
| 1 | 26 | 1 | 27 | 2 | 28 | 3 |
| 2 | 29 | 4 | 30 | 5 | 31 | 6 |
| 3 | 32 | 7 | 33 | 8 | 34 | 9 |
| 4 | 35 | 10 | 36 | 11 | 37 | 12 |
| 5 | 38 | 13 | 39 | 14 | 40 | 15 |
| 6 | 41 | 16 | 42 | 17 | 43 | 18 |
| 7 | 44 | 19 | 45 | 20 | 46 | 21 |
| 8 | 47 | 22 | 48 | 23 | 49 | 24 |

NOTE: At the time the jack is ordered, the customer shall specify the number of and sequence of central office lines to be connected to the jack. The telephone company will consecutively wire these lines to the jack in accordance with the table above, without skipping any positions.

(6) *Bridged T/R; 50-position ribbon jack—Programmed.*

ELECTRICAL NETWORK CONNECTION: Single or multiple line bridged tip and ring.
UNIVERSAL SERVICE ORDER CODE: RJ27X.
MECHANICAL ARRANGEMENT: 50-position miniature ribbon jack.
TYPICAL USAGE: Programmed jack for programmed (P) types of data equipment.
WIRING DIAGRAM:

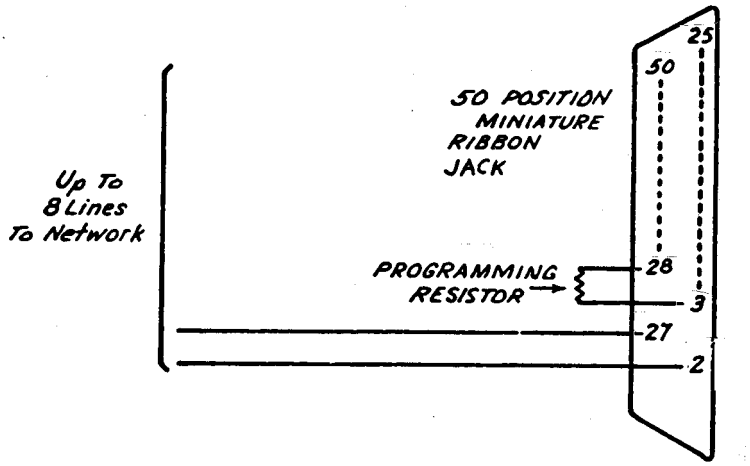


| Line | Position | | | |
|---|---|---|---|---|
| | P | | PR | PC |
| | T | R | | |
| 1 | 27 | 2 | 28 | 3 |
| 2 | 30 | 5 | 31 | 6 |
| 3 | 33 | 8 | 34 | 9 |
| 4 | 36 | 11 | 37 | 12 |
| 5 | 39 | 14 | 40 | 15 |
| 6 | 42 | 17 | 43 | 18 |
| 7 | 45 | 20 | 46 | 21 |
| 8 | 48 | 23 | 49 | 24 |

NOTE: At the time the jack is ordered, the customer shall specify the number of and sequence of central office lines to be connected to the jack. The telephone company will consecutively wire these lines to the jack in accordance with the table above, without skipping any positions.

(f) *Multiple line series configurations*—(1) *Up to eight (8) position jacks.* Multiple series jacks in this category consist of multiple arrangements of configurations specified in paragraph (b) of this section, in a multiple mounting arrangement. Such multiple arrangements may be ordered as a unit under the following:

UNIVERSAL SERVICE ORDER CODE: RJ31M: Multiple series T/R ahead of all station equipment (reference § 68.502(b)(1)).

[41 FR 28699, July 12, 1976, as amended at 44 FR 7959, Feb. 8, 1979; 46 FR 38516, July 28, 1981; 50 FR 47549, Nov. 19, 1985; 50 FR 49930, Dec. 6, 1985; 51 FR 951, Jan. 9, 1986]

## § 68.504 Universal patent license agreement.

UNIVERSAL PATENT LICENSE AGREEMENT

Effective as of ——— WESTERN ELECTRIC COMPANY, INCORPORATED, a New York corporation (''WESTERN''), having an office at 222 Broadway, New York, New York 10038, and ——————— (''the CORPORATION''), having an office at ——————— agree as follows:

ARTICLE I—DEFINITIONS

1.01 Terms in this agreement (other than technical terms, names of parties, companies and Article headings) which are in capital letters shall have the meanings specified in the General Definitions Appendix, and technical terms in this agreement which are in capital letters shall have the meanings specified in the Technical Definitions Appendix.

ARTICLE II—GRANTS OF LICENSES AND IMMUNITIES

2.01 WESTERN grants to the CORPORATION under WESTERN'S PATENTS nonexclusive licenses for products of the following kinds:

2.02 All licenses herein granted shall commence on the effective date hereof and, except as provided in Article V and notwithstanding the expiration of the FIVE YEAR PERIOD, shall continue for the entire terms that the patents under which they are granted are in force or for that part of such terms for which WESTERN has the right to grant such licenses.

2.03 WESTERN grants under all patents issued in countries other than the United States and owned or controlled by AMERICAN TELEPHONE AND TELEGRAPH COMPANY, a New York corporation (''AT&T''), WESTERN or their SUBSIDARIES, royalty-free immunity relating to the sale, lease or use in, or the importation into, such other countries of LICENSED PRODUCTS, and maintenance parts therefor, manufactured under the licenses granted under WESTERN'S PATENTS: provided, however, that nothing in this section 2.03 shall relieve the CORPORATION of its obligation to pay any royalty which may be predicated upon such manufacture of any such LICENSED PRODUCT or part, whether or not the first sale, lease or use thereof occurs outside of the United States.

2.04 The licenses granted for LICENSED PRODUCTS are licenses to make, have made, use, lease and sell such LICENSED PRODUCTS. Such licenses include the rights to maintain LICENSED PRODUCTS, to practice methods and processes involved in the use of LICENSED PRODUCTS and to make and have made, to use and have used, and to maintain machines, tools, materials and other instrumentalities, and to use and have used methods and processes, insofar as such machines, tools, materials, other instrumentalities, methods and processes are involved in or incidental to the development, manufacture, installation, testing or repair of LICENSED PRODUCTS.

2.05 The grant of each license to the CORPORATION includes the right to grant sublicenses within the scope of such license to its SUBSIDIARIES. Such right may be exercised at any time prior to termination or cancellation of the corresponding license under the provisions of Article V. Any such sublicenses granted to any present SUBSIDIARY may be made effective, retroactively, as of the effective date hereof, and any such sublicenses granted to any future SUBSIDIARY may be made effective, retroactively, as of the date such company became a SUBSIDIARY.

2.06 It is recognized that WESTERN or any of its ASSOCIATED COMPANIES may have entered into or may hereafter enter into a contract with a national government to do development work financed by such government and may be required under such contract (either unconditionally or by reason of any action or inaction thereunder) to assign to such government its rights to grant, or may now or hereafter be restrained by such government from granting, licenses or immunities to others than its ASSOCIATED COMPANIES under patents for inventions arising out of such work or covered by such contract. The resulting inability of WESTERN to grant the licenses or immunities purported to be granted by it under patents for such inventions shall not be considered to be a breach of this agreement, if:

(i) Such contract is for the benefit of such government's military or national defense establishment or the Energy Research and Development Administration of the United States Government or the National Aeronautics and Space Administration of the United States Government, or

(ii) In cases other than (i), such contract is with the United States Government or any agency of and within such Government, and any such requirement or restraint is pursuant to a statute or officially promulgated regulation of such Government or agency applicable to such contract;

provided, however, that

(iii) WESTERN (or, if an ASSOCIATED COMPANY thereof has entered into such contract, such ASSOCIATED COMPANY) shall exert its best efforts to enable WESTERN to grant the licenses or immunities herein purported to be granted by it under such patents; and

(iv) Within ninety (90) days after the filing of any application for any such patent, WESTERN shall give written notice to the other party identifying such application by country, number and date of filing.

For the purposes of this section 2.06, AT&T, WESTERN and their ASSOCIATED COMPANIES shall all be deemed to be ASSOCIATED COMPANIES of one another.

ARTICLE III—ROYALTY

3.01 The CORPORATION shall pay to WESTERN royalty, at the applicable rate hereinafter specified, on each LICENSED PRODUCT, and maintenance part therefor, which is a ROYALTY-BEARING PRODUCT, and

(i) Which is sold, leased or put into use by the CORPORATION or any of its SUBSIDIARIES while any license acquired hereunder by the CORPORATION with respect to such ROYALTY-BEARING PRODUCT shall remain in force, or

(ii) Which is made by or for the CORPORATION or any of its SUBSIDIARIES while any such license shall remain in force and is thereafter sold, leased or put into use by the CORPORATION or any of its SUBSIDIARIES,

whether or not such SUBSIDIARIES are sublicensed pursuant to section 2.05, such royalty rate to be applied, except as provided in section 3.05, to the NET SELLING PRICE of such ROYALTY-BEARING PRODUCT if sold for a separate consideration payable wholly in money and in all other cases to the FAIR MARKET VALUE thereof. The royalty rates applicable to LICENSED PRODUCTS of the kinds specified in section 2.01, and maintenance parts therefor, are as follows:

(iii)

3.02 If a LICENSED PRODUCT is a ROYALTY-BEARING PRODUCT solely on account of one or a limited number of WESTERN'S PATENTS, the CORPORATION may elect to reduce the amount of royalty otherwise payable hereunder on said LICENSED PRODUCT by a royalty reduction percentage, and as of an effective date, established by WESTERN. Upon written request from the CORPORATION identifying the LICENSED PRODUCT and each relevant patent, WESTERN will inform the CORPORATION of the royalty reduction percentage applicable in respect of said LICENSED PRODUCT and patent or patents and the effective date thereof.

3.03 A LICENSED PRODUCT, or maintenance part therefor, which is made and sold by the CORPORATION or any of its SUBSIDIARIES and which is a ROYALTY-BEARING PRODUCT hereunder on account of one or more of WESTERN'S PATENTS, may be treated by the CORPORATION as not licensed and not subject to royalty hereunder if all of the following conditions are met:

(i) The purchaser is licensed under the same patent or patents, pursuant to another agreement, to have said LICENSED PRODUCT or part made;

(ii) The purchaser expressly advises the CORPORATION or its SUBSIDIARY, whichever effects the making and sale, in writing at or prior to (but in no event later than) the time of such sale that, in purchasing said LICENSED PRODUCT or part, it is exercising its own license or licenses under said patent or patents to have said LICENSED PRODUCT or part made; and

(iii) The CORPORATION retains such written advice and makes it available to WESTERN at the latter's request.

3.04 Only one royalty shall be payable hereunder in respect of any ROYALTY-BEARING PRODUCT. Royalty shall accrue hereunder on any LICENSED PRODUCT, or maintenance part therefor, upon its first becoming a ROYALTY-BEARING PRODUCT, and the royalty thereon shall become payable in accordance with the provisions of this Article III upon the first sale, lease or putting into use thereof.

3.05 If any sale of a ROYALTY-BEARING PRODUCT shall be made by the CORPORATION on a SUBSIDIARY thereof to:

(i) Any company of which the CORPORATION is a SUBSIDIARY at the time of such sale, or

(ii) The CORPORATION or a SUBSIDIARY thereof or any other SUBSIDIARY of a company of which the CORPORATION is a SUBSIDIARY at the time of such sale.

royalty payable hereunder shall be computed on the FAIR MARKET VALUE of such ROYALTY-BEARING PRODUCT,

ARTICLE IV—REPORTS AND PAYMENTS

4.01 The CORPORATION shall keep full, clear and accurate records with respect to ROYALTY-BEARING PRODUCTS. WESTERN shall have the right through its accredited auditing representatives to make an examination and audit, during normal business hours, not more frequently than annually, of all such records and such other records and accounts as may under recognized accounting practices contain information bearing upon the amount of royalty payable to it under this agreement. Prompt adjustment shall be made by the proper party to compensate for any errors or omissions disclosed by such examination or audit. Neither such right to examine and audit nor the right to receive such adjustment shall be affected by any statement to the contrary, appearing on checks or otherwise, unless such statement appears in a letter, signed by the party having such right and delivered to the other party, expressly waiving such right.[1]

4.02 (a) Within sixty (60) days after the end of each semiannual period ending on June 30th or December 31st, commencing with the semiannial period during which this agreement first becomes effective, the CORPORATION shall furnish to WESTERN a statement, in form acceptable to WESTERN, certified by a responsible official of the CORPORATION:

(i) Showing all ROYALTY-BEARING PRODUCTS, by kinds of LICENSED PRODUCTS, which were sold, leased or put into use during such semiannual period, the NET SELLING PRICES of such ROYALTY-BEARING PRODUCTS or (where royalty is based on FAIR MARKET VALUES) the FAIR MARKET VALUES thereof and the amount of royalty payable thereon (or if no such ROYALTY-BEARING PRODUCT has been so sold, leased or put into use, showing that fact);

(ii) Identifying, if royalty is reduced under provisions of section 3.02, each LICENSED PRODUCT by its type and the patent or patents involved in such royalty reduction;

(iii) Showing, by purchasers and kinds of LICENSED PRODUCTS, the monetary totals of the sales, to each purchaser exercising its own ''to have made'' license or licenses, of LICENSED PRODUCTS and

[1] If licensee insists on a non-Western auditor, third line, insert, after ''representatives'', -or, at the election of the CORPORATION, through a firm of certified public accountants proposed by WESTERN and accepted by the CORPORATION-.

maintenance parts in transactions of the character described in section 3.03; and

(iv) Identifying all transactions of the character described in section 3.05.

(b) Within such sixty (60) days the CORPORATION shall, irrespective of its own business and accounting methods, pay to WESTERN the royalties payable for such semiannual period.

(c) Notwithstanding the provisions of section 6.03(a)(v), the CORPORATION shall furnish whatever additional information WESTERN may reasonably prescribe from time to time to enable WESTERN to ascertain which LICENSED PRODUCTS (and maintenance parts therefor) sold, leased or put into use by the CORPORATION or any of its SUBSIDIARIES are subject to the payment of royalty to WESTERN, and the amount of royalty payable thereon.

4.03 Royalty payments provided for in this agreement shall, when overdue, bear interest at an annual rate of one percent (1%) over the prime rate or successive prime rates in effect in New York City during delinquency.

4.04 Payment to WESTERN shall be made in United States dollars to WESTERN'S Treasury Organization at 222 Broadway, New York, New York 10038, or at such changed address as WESTERN shall have specified by written notice. If any royalty for any semiannual period referred to in section 4.02 is computed in other currency, conversion to United States dollars shall be at the prevailing rate for bank cable transfers on New York City as quoted for the last day of such semiannual period by leading banks dealing in the New York City foreign exchange market.

ARTICLE V—TERMINATION, CANCELLATION AND SURRENDER

5.01 (a) If the CORPORATION shall fail to fulfill one or more of its obligations under ARTICLES III or IV, WESTERN may, upon election and in addition to any other remedies that it may have, at any time terminate all licenses and rights granted to the CORPORATION hereunder, by not less than six (6) months' written notice to the CORPORATION specifying any such breach, unless within the period of such notice all breaches specified therein shall have been remedied.

(b) Termination by WESTERN of licenses and rights granted to the CORPORATION shall terminate the obligations of the CORPORATION under the provisions of Articles III and IV relating to such terminated licenses and rights, except such obligations as to ROYALTY-BEARING PRODUCTS made, sold, leased or put into use prior to such termination.

5.02 By written notice to WESTERN, the CORPORATION may cancel the licenses for any specified products granted hereunder to it under WESTERN'S PATENTS. Such cancellation shall be effective as of the date of giving said notice but shall not relieve the CORPORATION of its obligation to pay accrued royalties with respect to such specified products.

5.03 By written notice to WESTERN, specifying any of WESTERN'S PATENTS by number and date of issuance, the CORPORATION may surrender and terminate all licenses and rights granted to it under such specified patent or patents or under any specified invention or inventions thereof. Such surrender and termination shall be effective as of a date specified in said notice which shall not be more than six (6) months prior to the date of giving said notice. As of said effective date, such specified patent or patents or invention or inventions shall cease to be among, or among the inventions of, WESTERN'S PATENTS for the purposes of this agreement without affecting obligations in respect of royalties accrued prior to said effective date.

5.04 (a) Every sublicense granted by the CORPORATION shall terminate with termination or cancellation of its corresponding license.

(b) Any sublicenses granted shall terminate if and when the grantee thereof ceases to be a SUBSIDIARY of the CORPORATION. Each LICENSED PRODUCT and each maintenance part, made by or for a SUBSIDIARY of the CORPORATION, and on which royalty has accrued but which remains not sold, leased or put into use at the time such SUBSIDIARY ceases to be a SUBSIDIARY of the CORPORATION, shall be deemed to have been put into use by such SUBSIDIARY immediately prior to such time at the place said LICENSED PRODUCT or part is then located.

5.05 Licenses, immunities and rights with respect to each LICENSED PRODUCT, and each maintenance part, made, sold, leased or put into use prior to any termination or cancellation under the provisions of this Article V shall survive such termination or cancellation.

ARTICLE VI—MISCELLANEOUS PROVISIONS

6.01 (a) WESTERN shall, upon written request from the CORPORATION sufficiently identifying any patent by country, number and date of issuance, inform the CORPORATION as to the extent to which any such patent is subject to the licenses, immunities and rights granted to the CORPORATION.

(b) If such licenses, immunities or rights under any such patent are restricted in scope, copies of all pertinent provisions of any contract (other than provisions of a contract with a government to the extent that disclosure thereof is prohibited under the government's laws or regulations) creating

such restrictions shall, upon request, be furnished to the CORPORATION.

6.02 Upon written request from the CORPORATION, WESTERN shall inform the CORPORATION which of WESTERN'S PATENTS cover inventions under which the United States Government holds a royalty-free license.

6.03 (a) Nothing contained in this agreement shall be construed as:

(i) Requiring the filing of any patent application, the securing of any patent or the maintaining of any patent in force; or

(ii) A warranty or representation by WESTERN as to the validity or scope of any patent; or

(iii) A warranty or representation that any manufacture, sale, lease, use or importation will be free from infringement of patents other than those under which and to the extent to which licenses or immunities are in force hereunder; or

(iv) An agreement to bring or prosecute actions or suits against third parties for infringement; or

(v) An obligation to furnish any manufacturing or technical information or assistance; or

(vi) Conferring any right to use, in advertising, publicity or otherwise, any name, trade name or trademark, or any contraction, abbreviation or simulation thereof; or

(vii) Conferring by implication, estoppel or otherwise upon the CORPORATION any license or other right under any patent, except the licenses and rights expressly granted to the CORPORATION; or

(viii) An obligation upon WESTERN to make any determination as to the applicability of any patent to any product of the CORPORATION or any of its SUBSIDIARIES; or

(ix) A release for any infringement prior to the effective date hereof.

(b) Neither WESTERN nor AT&T makes any representations, extends any warranties of any kind or assumes any responsibility whatever with respect to the manufacture, sale, lease, use or importation of any LICENSED PRODUCT, or part therefor, by the CORPORATION, any of its SUBSIDIARIES, or any direct or indirect supplier or vendee or other transferee of any such company, other than the licenses, immunities and rights expressly herein granted.

6.04 Neither this agreement nor any licenses or rights hereunder, in whole or in part, shall been assignable or otherwise transferable.

6.05 Any notice, request or information shall be deemed to be sufficiently given when sent by registered mail addressed to the addressee at its office above specified (and when addressed to WESTERN to the attention of its Patent Licensing Organization) and any royalty statement shall be deemed to be sufficiently furnished when sent by registered mail addressed to WESTERN'S Treasury Organization at 222 Broadway, New York, New York 10038, or at such changed address as the addressee shall have specified by written notice.

6.06 This agreement sets forth the entire agreement and understanding between the parties as to the subject matter hereof and merges all prior discussions between them, and neither of the parties shall be bound by any conditions, definitions, warranties, understandings or representations with respect to such subject matter other than as expressly provided herein, or in any prior existing written agreement between the parties, or as duly set forth on or subsequent to the effective date hereof in writing and signed by a proper and duly authorized representative of the party to be bound thereby.

6.07 The construction and performance of this agreement shall be governed by the law of the State of New York.

IN WITNESS WHEREOF, each of the parties has caused this agreement to be executed in duplicate originals by its duly authorized representatives on the respective dates entered below.

WESTERN ELECTRIC COMPANY, INCORPORATED

By

Director of Patent Licensing

Date

[SEAL]

Attest:

Secretary

By

Title

Date

[SEAL]

Attest:

Secretary

GENERAL DEFINITIONS APPENDIX

FAIR MARKET VALUE means the NET SELLING PRICE which the CORPORATION or any of its SUBSIDIARIES, whichever effects the sale, lease or use of the product or maintenance part, would realize from an unaffiliated buyer in an arm's length sale of an identical product or maintenance part in the same quantity and at the same time and place as such sale, lease or use.

FIVE YEAR PERIOD means the period commencing on the effective date of this agreement and having a duration of five years.

LICENSED PRODUCT means:

(i) Any product as such, or

(ii) Any product which is any specified combination, of the kinds listed in section 2.01 of this agreement. Although the term does not mean, and although licenses are

not granted for any other combination, a LICENSED PRODUCT

(iii) Shall not lose its status as such on account of, and

(iv) Shall not cause an unlicensed combination to infringe WESTERN'S PATENTS solely on account of, such LICENSED PRODUCT being made, sold, leased or put into use as part of an unlicensed combination.

NET SELLING PRICE means the gross selling price of the ROYALTY-BEARING PRODUCT in the form in which it is sold, whether or not assembled (and without excluding therefrom any components or subassemblies thereof, whatever their origin and whether or not patent impacted), less the following items but only insofar as they pertain to the sale of such ROYALTY-BEARING PRODUCT by the CORPORATION or any of its SUBSIDIARIES and are included in such gross selling price:

(i) Usual trade discounts actually allowed (other than cash discounts, advertising allowances, or fees or commissions to any employees of the CORPORATION, a SUBSIDIARY of the CORPORATION, a company of which the CORPORATION is a SUBSIDIARY at the time of the sale, or any other SUBSIDIARY of a company of which the CORPORATION is a SUBSIDIARY at the time of such sale);

(ii) Packing costs;

(iii) Import, export, excise and sales taxes, and customs duties;

(iv) Costs of insurance and transportation from the place of manufacture to the customer's premises or point of installation;

(v) Costs of installation at the place of use; and

(vi) Costs of special engineering services not incident to the design or manufacture of the ROYALTY-BEARING PRODUCT.

ROYALTY-BEARING PRODUCT means any LICENSED PRODUCT, and any maintenance part therefor,

(i) Which upon manufacture includes, or the manufacture of which employs, any invention of any of WESTERN'S PATENTS in force at the time and place of such manufacture, or

(ii) Which includes when sold, leased or put into use, or the use of which employs, any invention of any of WESTERN'S PATENTS in force at the time and place of such sale, lease or use,

other than

(iii) Inventions under which the United States Government holds a royalty-free license if such LICENSED PRODUCT or part is contracted for, directly or indirectly, by the United States Government, or by another national government with funds derived through the Military Assistance Program or otherwise through the United States Government, and

(iv) Inventions employed in the manufacture of, or included in, such LICENSED PRODUCT or any original part thereof, or such maintenance part therefor or any original part thereof, by a direct or indirect supplier of the CORPORATION or any of its SUBSIDIARIES, but only to the extent such supplier has exercised its own licenses granted by WESTERN under patents for such inventions to so employ or include said inventions.

SUBSIDIARY means a company the majority of whose stock entitled to vote for election of directors is now or hereafter controlled by the parent company either directly or indirectly, but any such company shall be deemed to be a SUBSIDIARY only so long as such control exists.

WESTERN'S PATENTS means all patents issued at any time in the United States for:

(i) Inventions made prior to the termination of the FIVE YEAR PERIOD and owned or controlled at any time during the FIVE YEAR PERIOD by AT&T, WESTERN or any of their SUBSIDIARIES,

(ii) Inventions made during the FIVE YEAR PERIOD, solely or jointly with anyone, and in the course of their employment by employees of any such company who are employed to do research, development or other inventive work, and

(iii) Any other inventions made prior to the termination of the FIVE YEAR PERIOD, with respect to which and to the extent to which any such company shall at any time during the FIVE YEAR PERIOD have the right to grant the licenses and rights which are herein granted by WESTERN:

provided, however, that said patents do not include those issued for inventions made by employees of any SUBSIDIARY of WESTERN or AT&T exclusively engaged in the performance of contracts with the Energy Research and Development Administration of the United States.

TECHNICAL DEFINITIONS APPENDIX

## BILATERAL PATENT LICENSE AGREEMENT

Effective as of ——— WESTERN ELECTRIC COMPANY, INCORPORATED, a New York corporation (''WESTERN''), having an office at 222 Broadway, New York, New York 10038, and ——————— (''the CORPORATION'') having an office at ——————— agree as follows:

ARTICLE I—DEFINITIONS

1.01 Terms in this agreement (other than technical terms, names of parties, companies and Article headings) which are in capital letters shall have the meanings specified in the General Definitions Appendix, and technical terms in this agreement which are in capital letters shall have the meanings specified in the Technical Definitions Appendix.

ARTICLE II—GRANTS OF LICENSES AND IMMUNITIES

2.01 WESTERN grants to the CORPORATION under WESTERN'S PATENTS nonexclusive licenses for products of the following kinds:

2.02 The CORPORATION grants to WESTERN and to AMERICAN TELEPHONE AND TELEGRAPH COMPANY, a New York corporation (''AT&T''), severally, under the CORPORATION'S PATENTS nonexclusive royalty-free licenses for products of the following kinds:

2.03 All licenses herein granted shall commence on the effective date hereof and, except as provided in Article VI and notwithstanding the expiration of the FIVE YEAR PERIOD, shall continue for the entire terms that the patents under which they are granted are in force or for that part of such terms for which the grantor has the right to grant such licenses.

2.04 (a) WESTERN grants under all patents issued in countries other than the United States and owned or controlled by AT&T, WESTERN or their SUBSIDIARIES, royalty-free immunity relating to the sale, lease or use in, or the importation into, such other countries of LICENSED PRODUCTS, and maintenance parts therefor, manufactured under the licenses granted under WESTERN'S PATENTS; provided, however, that nothing in this section 2.04(a) shall relieve the CORPORATION of its obligation to pay any royalty which may be predicated upon such manufacture of any such LICENSED PRODUCT or part, whether or not the first sale, lease or use thereof occurs outside of the United States.

(b) The CORPORATION grants under all patents issued in countries other than the United States and owned or controlled by it or its ASSOCIATED COMPANIES, royalty-free immunity relating to the sale, lease or use in, or the importation into, such other countries of LICENSED PRODUCTS, and maintenance parts therefor, manufactured under the licenses granted under the CORPORATION'S PATENTS.

2.05 The licenses granted for LICENSED PRODUCTS are licenses to make, have made, use, lease and sell such LICENSED PRODUCTS. Such licenses include the rights to maintain LICENSED PRODUCTS, to practice methods and processes involved in the use of LICENSED PRODUCTS and to make and have made, to use and have used, and to maintain machines, tools, materials and other instrumentalities, and to use and have used methods and processes, insofar as much machines, tools, materials, other instrumentalities, methods and processes are involved in or incidental to the development, manufacture, installation, testing or repair of LICENSED PRODUCTS.

2.06 The grant of each license to the CORPORATION includes the right to grant sublicenses within the scope of such license to its SUBSIDIARIES. The grant of each license to WESTERN or AT&T includes the right to grant sublicenses within the scope of such license to its ASSOCIATED COMPANIES. Such right of either party or AT&T may be exercised at any time prior to termination or cancellation of the corresponding license under the provisions of Article VI. Any such sublicenses granted to any present SUBSIDIARY or any present ASSOCIATED COMPANY may be made effective, retroactively, as of the effective date hereof, and any such sublicenses granted to any future SUBSIDIARY or any future ASSOCIATED COMPANY may be made effective, retroactively, as of the date such company became a SUBSIDIARY or an ASSOCIATED COMPANY.

ARTICLE III—ACQUISITION AND WARRANTY

3.01 WESTERN and the CORPORATION shall each acquire rights to inventions made during the FIVE YEAR PERIOD which relate to the subject matter of licenses granted and are made, in the course of their employment, either solely or jointly with anyone, by its or its ASSOCIATED COMPANIES employees (and in the case of WESTERN'S obligation, by employees of AT&T or its SUBSIDIARIES) who are employed to do research, development or other inventive work, such that each grantee shall by virtue of this agreement, receive in respect of patents issued for such inventions, licenses and rights of the scope and upon the terms herein provided to be granted to such grantee.

3.02 WESTERN and, except as may be stated in a letter from the CORPORATION to WESTERN referring to this agreement and delivered before or concurrently with the execution hereof by WESTERN, the CORPORATION each warrants that there are no commitments or restrictions which will limit the licenses and rights granted by it under patents issued at any time for inventions owned at any time during the FIVE YEAR PERIOD by it or any of its ASSOCIATED COMPANIES (and in the case of WESTERN'S warranty, by AT&T or any of its SUBSIDIARIES).

3.03 It is recognized that either party or any of its ASSOCIATED COMPANIES may

have entered into or may hereafter enter into a contract with a national government to do development work financed by such government and may be required under such contract (either unconditionally or by reason of any action or inaction thereunder) to assign to such government its rights to grant, or may now or hereafter be restrained by such government from granting, licenses or immunities to others than its ASSOCIATED COMPANIES under patents for inventions arising out of such work or covered by such contract. The resulting inability of such party to grant the licenses or immunities purported to be granted by it under patents for such inventions shall not be considered to be a breach of this agreement, if:

(i) Such contract is for the benefit of such government's military or national defense establishment or the Energy Research and Development Administration of the United States Government or the National Aeronautics and Space Administration of the United States Government, or

(ii) In cases other than (i), such contract is with the United States Government or any agency of and within such Government, and any such requirement or restraint is pursuant to a statute or officially promulgated regulation of such Government or agency applicable to such contract;

provided, however, that:

(iii) Such party (or, if an ASSOCIATED COMPANY thereof has entered into such contract, such ASSOCIATED COMPANY) shall exert its best efforts to enable such party to grant the licenses or immunities herein purported to be granted by it under such patents; and

(iv) Within ninety (90) days after the filing of any application for any such patent, such party shall give written notice to the other party identifying such application by country, number and date of filing.

For the purposes of this section 3.03, AT&T, WESTERN and their ASSOCIATED COMPANIES shall all be deemed to be ASSOCIATED COMPANIES of one another, and the CORPORATION and its ASSOCIATED COMPANIES shall be deemed to be ASSOCIATED COMPANIES of one another.

ARTICLE IV—ROYALTY

4.01 The CORPORATION shall pay to WESTERN royalty, at the applicable rate hereinafter specified, on each LICENSED PRODUCT, and maintenance part therefor, which is a ROYALTY-BEARING PRODUCT, and

(i) Which is sold, leased or put into use by the CORPORATION or any of its SUBSIDIARIES while any license acquired hereunder by the CORPORATION with respect to such ROYALTY-BEARING PRODUCT shall remain in force, or

(ii) Which is made by or for the CORPORATION or any of its SUBSIDIARIES while any such license shall remain in force and is thereafter sold, leased or put into use by the CORPORATION or any of its SUBSIDIARIES,

whether or not such SUBSIDIARIES are sublicensed pursuant to section 2.06, such royalty rate to be applied, except as provided in section 4.05, to the NET SELLING PRICE of such ROYALTY-BEARING PRODUCT if sold for a separate consideration payable wholly in money and in all other cases to the FAIR MARKET VALUE thereof. The royalty rates applicable to LICENSED PRODUCTS of the kinds specified in section 2.01, and maintenance parts therefor, are as follows:

(iii)

4.02 If a LICENSED PRODUCT is a ROYALTY-BEARING PRODUCT solely on account of one or a limited number of WESTERN'S PATENTS, the CORPORATION may elect to reduce the amount of royalty otherwise payable hereunder on said LICENSED PRODUCT by a royalty reduction percentage, and as of an effective date, established by WESTERN. Upon written request from the CORPORATION identifying the LICENSED PRODUCT and each relevant patent, WESTERN will inform the CORPORATION of the royalty reduction percentage applicable in respect of said LICENSED PRODUCT and patent or patents and the effective date thereof.

4.03 A LICENSED PRODUCT, or maintenance part therefor, which is made and sold by the CORPORATION or any of its SUBSIDIARIES and which is a ROYALTY-BEARING PRODUCT hereunder on account of one or more of WESTERN'S PATENTS, may be treated by the CORPORATION as not licensed and not subject to royalty hereunder if all of the following conditions are met:

(i) The purchaser is licensed under the same patent or patents, pursuant to another agreement, to have said LICENSED PRODUCT or part made;

(ii) The purchaser expressly advises the CORPORATION or its SUBSIDIARY, whichever effects the making and sale, in writing at or prior to (but in no event later than) the time of such sale that, in purchasing said LICENSED PRODUCT or part, it is exercising its own license or licenses under said patent or patents to have said LICENSED PRODUCT or part made; and

(iii) The CORPORATION retains such written advice and makes it available to WESTERN at the latter's request.

4.04 Only one royalty shall be payable hereunder in respect of any ROYALTY-BEARING PRODUCT. Royalty shall accrue

hereunder on any LICENSED PRODUCT, or maintenance part therefor, upon its first becoming a ROYALTY-BEARING PRODUCT, and the royalty thereon shall become payable in accordance with the provisions of this Article IV upon the first sale, lease or putting into use thereof.

4.05 If any sale of a ROYALTY-BEARING PRODUCT shall be made by the CORPORATION or a SUBSIDIARY thereof to:

(i) Any company of which the CORPORATION is a SUBSIDIARY at the time of such sale, or

(ii) The CORPORATION or a SUBSIDIARY thereof or any other SUBSIDIARY of a company of which the CORPORATION is a SUBSIDIARY at the time of such sale,

royalty payable hereunder shall be computed on the FAIR MARKET VALUE of such ROYALTY-BEARING PRODUCT.

ARTICLE V—REPORTS AND PAYMENTS

5.01 The CORPORATION shall keep full, clear and accurate records with respect to ROYALTY-BEARING PRODUCTs. WESTERN shall have the right through its accredited auditing representatives to make an examination and audit, during normal business hours, not more frequently than annually, of all such records and such other records and accounts as may under recognized accounting practices contain information bearing upon the amount of royalty payable to it under this agreement. Prompt adjustment shall be made by the proper party to compensate for any errors or omissions disclosed by such examination or audit. Neither such right to examine and audit nor the right to receive such adjustments shall be affected by any statement to the contrary, appearing on checks or otherwise, unless such statement appears in a letter, signed by the party having such right and delivered to the other party, expressly waiving such right.[1]

5.02 (a) Within sixty (60) days after the end of each semiannual period ending on June 30th or December 31st, commencing with the semiannual period during which this agreement first becomes effective, the CORPORATION shall furnish to WESTERN a statement, in form acceptable to WESTERN; certified by a responsible official of the CORPORATION:

(i) Showing all ROYALTY-BEARING PRODUCTS, by kinds of LICENSED PRODUCTS, which were sold, leased or put into use during such semiannual period, the NET SELLING PRICES of such ROYALTY-BEARING PRODUCTS or (where royalty is based on FAIR MARKET VALUES) the FAIR MARKET VALUES thereof and the amount of royalty payable thereon (or if no such ROYALTY-BEARING PRODUCT has been so sold, leased or put into use, showing that fact);

(ii) Identifying, if royalty is reduced under provisions of section 4.02, each LICENSED PRODUCT by its type and the patent or patents involved in such royalty reduction;

(iii) Showing, by purchasers and kinds of LICENSED PRODUCTS, the monetary totals of the sales, to each purchaser exercising its own ''to have made'' license or licenses, of LICENSED PRODUCTS and maintenance parts in transactions of the character described in section 4.03; and

(iv) Identifying all transactions of the character described in section 4.05.

(b) Within such sixty (60) days the CORPORATION shall, irrespective of its own business and accounting methods, pay to WESTERN the royalties payable for such semiannual period.

(c) Notwithstanding the provisions of section 7.04(a)(v), the CORPORATION shall furnish whatever additional information WESTERN may reasonably prescribe from time to time to enable WESTERN to ascertain which LICENSED PRODUCTS (and maintenance parts therefor) sold, leased or put into use by the CORPORATION or any of its SUBSIDIARIES are subject to the payment of royalty to WESTERN, and the amount of royalty payable thereon.

5.03 Royalty payments provided for in this agreement shall, when overdue, bear interest at an annual rate of one percent (1%) over the prime rate or successive prime rates in effect in New York City during delinquency.

5.04 Payment to WESTERN shall be made in United States dollars to WESTERN'S Treasury Organization at 222 Broadway, New York, New York 10038, or at such changed address as WESTERN shall have specified by written notice. If any royalty for any semiannual period referred to in section 5.02 is computed in other currency, conversion to United States dollars shall be at the prevailing rate for bank cable transfers on New York City as quoted for the last day of such semiannual period by leading banks dealing in the New York City foreign exchange market.

ARTICLE VI—TERMINATION, CANCELLATION AND SURRENDER

6.01 Any termination under the provisions of this Article VI by one party of licenses and rights of the other party shall not affect the licenses and rights of the terminating party and its sublicensees (or of AT&T and

[1] If licensee insists on a non-Western auditor, third line, insert, after ''representatives'', -or, at the election of the CORPORATION, through a firm of certified public accountants proposed by WESTERN and accepted by the CORPORATION-.

its sublicensees if WESTERN is the terminating party), nor the obligations of the CORPORATION under the provisions of Articles IV and V if it is the terminating party.

6.02 If WESTERN shall fail to fulfill one or more of its obligations under this agreement, the CORPORATION may, upon election and in addition to any other remedies that it may have, at any time terminate all licenses and rights granted to WESTERN and AT&T hereunder, by not less than six (6) months' written notice to WESTERN specifying any such breach, unless within the period of such notice all breaches specified therein shall have been remedied.

6.03 (a) If the CORPORATION shall fail to fulfill one or more of:

(i) Its obligations under Articles IV or V, or

(ii) Its obligations under this agreement whereby WESTERN or AT&T fails to receive licenses or rights which it is entitled hereunder to receive under patents issued in the United States,

WESTERN may, upon the election and in addition to any other remedies that it may have, at any time terminate all licenses and rights granted to the CORPORATION hereunder, by not less than six (6) months' written notice to the CORPORATION specifying any such breach, unless within the period of such notice all breaches specified therein shall have been remedied.

(b) Termination by WESTERN of licenses and rights granted to the CORPORATION shall terminate the obligations of the CORPORATION under the provisions of Articles IV and V relating to such terminated licenses and rights, except such obligations as to ROYALTY-BEARING PRODUCTS made, sold, leased or put into use prior to such termination.

6.04 (a) By written notice to WESTERN, the CORPORATION may cancel the licenses for any specified products granted hereunder to it under WESTERN'S PATENTS. Such cancellation shall be effective as of the date of giving said notice but shall not relieve the CORPORATION of its obligation to pay accrued royalties with respect to such specified products.

(b) By written notice to the CORPORATION, WESTERN or AT&T may cancel the licenses for any specified products granted hereunder to it under the CORPORATION'S PATENTS, such cancellation to be effective as of the date of giving said notice.

6.05 By written notice to WESTERN, specifying any of WESTERN'S PATENTS by number and date of issuance, the CORPORATION may surrender and terminate all licenses and rights granted to it under such specified patent or patents or under any specified invention or inventions thereof. Such surrender and termination shall be effective as of a date specified in said notice which shall not be more than six (6) months prior to the date of giving said notice. As of said effective date, such specified patent or patents or invention or inventions shall cease to be among, or among the inventions of, WESTERN'S PATENTS for the purposes of this agreement without affecting obligations in respect of royalties accrued prior to said effective date.

6.06 (a) Every sublicense granted by a party or AT&T shall terminate with termination or cancellation of its corresponding license.

(b) Any sublicenses granted shall terminate if and when the grantee thereof ceases to be an ASSOCIATED COMPANY of WESTERN or AT&T or a SUBSIDIARY of the CORPORATION. Each LICENSED PRODUCT and each maintenance part, made by or for a SUBSIDIARY of the CORPORATION, and on which royalty has accrued but which remains not sold, leased or put into use at the time such SUBSIDIARY ceases to be a SUBSIDIARY of the CORPORATION, shall be deemed to have been put into use by such SUBSIDIARY immediately prior to such time at the place said LICENSED PRODUCT or part is then located.

(c) If an ASSOCIATED COMPANY'S relationship to a party or AT&T changes so that such ASSOCIATED COMPANY is no longer an ASSOCIATED COMPANY of such party or AT&T, licenses and rights acquired under the patents and patent rights of such ASSOCIATED COMPANY for inventions made prior to the date such relationship changed shall not be affected by such change.

6.07 Licenses, immunities and rights with respect to each LICENSED PRODUCT, and each maintenance part, made, sold, leased or put into use prior to any termination or cancellation under the provisions of this Article VI shall survive such termination or cancellation.

ARTICLE VII—MISCELLANEOUS PROVISIONS

7.01 With respect to patents or inventions owned jointly by the CORPORATION, or any of its ASSOCIATED COMPANIES, with any other person or persons who has or have granted, or who shall hereafter grant, to WESTERN or AT&T, licenses or other rights thereunder, the CORPORATION, to the extent that the licenses and rights so granted do not exceed the scope of the licenses and rights herein granted by the CORPORATION, consents to the grant of licenses and rights to WESTERN and AT&T under such patents and inventions by such other person or persons.

7.02 (a) Each party shall, upon written request from the other party sufficiently identifying any patent by country, number and date of issuance, inform the other party as to the extent to which any such patent is subject to the licenses, immunities and rights granted to such other party.

(b) If such licenses, immunities or rights under any such patent are restricted in scope, copies of all pertinent provisions of any contract (other than provisions of a contract with a government to the extent that disclosure thereof is prohibited under that government's laws or regulations) creating such restrictions shall, upon request, be furnished to the party making such request.

7.03 Upon written request from one party, the other party shall inform the requesting party which of said other party's patents cover inventions under which the United States Government holds a royalty-free license.

7.04 (a) Nothing contained in this agreement shall be construed as:

(i) Requiring the filing of any patent application, the securing of any patent or the maintaining of any patent in force; or

(ii) A warranty or representation by any grantor as to the validity or scope of any patent; or

(iii) A warranty or representation that any manufacture, sale, lease, use or importation will be free from infringement of patents other than those under which and to the extent to which licenses or immunities are in force hereunder; or

(iv) An agreement to bring or prosecute actions or suits against third parties for infringement; or

(v) An obligation to furnish any manufacturing or technical information or assistance; or

(vi) Conferring any right to use, in advertising, publicity or otherwise, any name, trade name or trademark, or any contraction, abbreviation or simulation thereof; or

(vii) Conferring by implication, estoppel or otherwise upon any grantee any license or other right under any patent, except the licenses and rights expressly granted to such grantee; or

(viii) An obligation upon any grantor to make any determination as to the applicability of any patent to any product of any grantee or any of its ASSOCIATED COMPANIES; or

(ix) A release for any infringement prior to the effective date hereof.

(b) Neither party nor AT&T makes any representations, extends any warranties of any kind or assumes any responsibility whatever with respect to the manufacture, sale, lease, use or importation of any LICENSED PRODUCT, or part therefor, by any grantee, any of its ASSOCIATED COMPANIES, or any direct or indirect supplier or vendee or other transferee of any such company, other than the licenses, immunities, rights and warranties expressly herein granted.

7.05 Neither this agreement nor any licenses or rights hereunder, in whole or in part, shall be assignable or otherwise transferable.

7.06 Any notice, request or information shall be deemed to be sufficently given when sent by registered mail addressed to the addressee at its office above specified (and when addressed to WESTERN, to the attention of its Patent Licensing Organization) and any royalty statement shall be deemed to be sufficiently furnished when sent by registered mail addressed to WESTERN'S Treasury Organization at 222 Broadway, New York, New York 10038, or at such changed address as the addressee shall have specified by written notice.

7.07 This agreement sets forth the entire agreement and understanding between the parties as to the subject matter hereof and merges all prior discussions between them and neither of the parties shall be bound by any conditions, definitions, warranties, understandings or representations with respect to such subject matter other than as expressly provided herein, or in any prior existing written agreement between the parties, or as duly set forth on or subsequent to the effective date hereof in writing and signed by a proper and duly authorized representative of the party to be bound thereby.

7.08 The construction and performance of this agreement shall be governed by the law of the State of New York.

IN WITNESS WHEREOF, each of the parties has caused this agreement to be executed in duplicate originals by its duly authorized representatives on the respective dates entered below.

WESTERN ELECTRIC COMPANY, INCORPORATED

By

Director of Patent Licensing

Date

[SEAL]

Attest:

Secretary

By

Title

Date

[SEAL]

Attest:

Secretary

GENERAL DEFINITIONS APPENDIX

ASSOCIATED COMPANIES of AT&T are The Southern New England Telephone Company, a Connecticut corporation, and its SUBSIDIARIES, Cincinnati Bell Inc., an Ohio corporation, and its SUBSIDIARIES, and SUBSIDIARIES of AT&T other than WESTERN and its SUBSIDIARIES.

ASSOCIATED COMPANIES of the CORPORATION are SUBSIDIARIES of the CORPORATION, companies presently having the CORPORATION as a SUBSIDIARY and other SUBSIDIARIES of such companies.

ASSOCIATED COMPANIES of WESTERN are SUBSIDIARIES of WESTERN.

The CORPORATION'S PATENTS means all patents issued at any time in the United States for:

(i) Inventions made prior to the termination of the FIVE YEAR PERIOD and owned or controlled at any time during the FIVE YEAR PERIOD by the CORPORATION or any of its ASSOCIATED COMPANIES,

(ii) Inventions made during the FIVE YEAR PERIOD, solely or jointly with anyone, and in the course of their employment by employees of any such company who are employed to do research, development or other inventive work, and

(iii) Any other inventions made prior to the termination of the FIVE YEAR PERIOD, with respect to which and to the extent to which any such company shall at any time during the FIVE YEAR PERIOD have the right to grant the licenses and rights which are herein granted by the CORPORATION.

FAIR MARKET VALUE means the NET SELLING PRICE which the CORPORATION or any of its SUBSIDIARIES, whichever effects the sale, lease or use of the product or maintenance part, would realize from an unaffiliated buyer in an arm's length sale of an identical product or maintenance part in the same quantity and at the same time and place as such sale, lease or use.

FIVE YEAR PERIOD means the period commencing on the effective date of this agreement and having a duration of five years.

LICENSED PRODUCT means, as to any respective grantee,

(i) any product as such, or

(ii) any product which is any specified combination.

of the kinds listed in section 2.01 or 2.02 of this agreement. Although the term does not mean, and although licenses are not granted for, any other combination, a LICENSED PRODUCT

(iii) shall not lose its status as such on account of, and

(iv) shall not cause an unlicensed combination to infringe the grantor's patents (i.e., WESTERN'S PATENTS or the CORPORATION'S PATENTS, as the case may be) solely on account of, such LICENSED PRODUCT being made, sold, leased or put into use as part of an unlicensed combination.

NET SELLING PRICE means the gross selling price of the ROYALTY-BEARING PRODUCT in the form in which it is sold, whether or not assembled (and without excluding therefrom any components or subassemblies thereof, whatever their origin and whether or not patent impacted), less the following items but only insofar as they pertain to the sale of such ROYALTY-BEARING PRODUCT by the CORPORATION or any of its SUBSIDIARIES and are included in such gross selling price:

(i) Usual trade discounts actually allowed (other than cash discounts, advertising allowances, or fees or commissions to any employees of the CORPORATION, a SUBSIDIARY of the CORPORATION, a company of which the CORPORATION is a SUBSIDIARY at the time of the sale, or any other SUBSIDIARY of a company of which the CORPORATION is a SUBSIDIARY at the time of such sale);

(ii) Packing costs;

(iii) Import, export, excise and sales taxes, and customs duties;

(iv) Costs of insurance and transportation from the place of manufacture to the customer's premises or point of installation;

(v) Costs of installation at the place of use; and

(vi) Costs of special engineering services not incident to the design or manufacture of the ROYALTY-BEARING PRODUCT.

ROYALTY-BEARING PRODUCT means any LICENSED PRODUCT of the kinds specified in section 2.01 of this agreement (other than any LICENSED PRODUCT for which all the licenses granted in this agreement are at a royalty rate of zero percent (0%)), and any maintenance part therefor,

(i) Which upon manufacture includes, or the manufacture of which employs, any invention of any of WESTERN'S PATENTS in force at the time and place of such manufacture, or

(ii) Which includes when sold, leased or put into use, or the use of which employs, any invention of any of WESTERN'S PATENTS in force at the time and place of such sale, lease or use,

other than:

(iii) Inventions under which the United States Government holds a royalty-free license if such LICENSED PRODUCT or part is contracted for, directly or indirectly, by the United States Government, or by another national government with funds derived through the Military Assistance Program or otherwise through the United States Government, and

(iv) Inventions employed in the manufacture of, or included in, such LICENSED PRODUCT or any original part thereof, or such maintenance part therefor or any original part thereof, by a direct or indirect supplier of the CORPORATION or any

of its SUBSIDIARIES, but only to the extent such supplier has exercised its own licenses granted by WESTERN under patents for such inventions to so employ or include said inventions.

SUBSIDIARY means a company the majority of whose stock entitled to vote for election of directors is now or hereafter controlled by the parent company either directly or indirectly, but any such company shall be deemed to be a SUBSIDIARY only so long as such control exists.

WESTERN'S PATENTS means all patents issued at any time in the United States for:

(i) Inventions made prior to the termination of the FIVE YEAR PERIOD and owned or controlled at any time during the FIVE YEAR PERIOD by AT&T, WESTERN or any of their SUBSIDIARIES,

(ii) Inventions made during the FIVE YEAR PERIOD, solely or jointly with anyone, and in the course of their employment by employees of any such company who are employed to do research, development or other inventive work, and

(iii) Any other inventions made prior to the termination of the FIVE YEAR PERIOD, with respect to which and to the extent to which any such company shall at any time during the FIVE YEAR PERIOD have the right to grant the licenses and rights which are herein granted by WESTERN;

provided, however, that said patents do not include those issued for inventions made by employees of any SUBSIDIARY of WESTERN or AT&T exclusively engaged in the performance of contracts with the Energy Research and Development Administration of the United States.

[41 FR 28699, July 12, 1976, as amended at 50 FR 47549, Nov. 19, 1985]

### § 68.506 Configurations used to connect multi-line communications systems such as Private Branch Exchange (PBX) and key telephone systems.

Any of the jack configurations specified in § 68.502, used singly, in multiple combinations, or combined in common mechanical arrays, may be used as the interface between multi-line equipment such as PBX and key telephone systems, and the telephone network. The telephone company and installation supervisor may mutually agree to use electrical connections alternative to those specified in § 68.502.

[43 FR 16501, Apr. 19, 1978]

# PART 69—ACCESS CHARGES

## Subpart A—General

Sec.
69.1 Application of access charges.
69.2 Definitions.
69.3 Filing of access service tariffs.
69.4 Charges to be filed.
69.5 Persons to be assessed.

## Subpart B—Computation of Charges

69.101 General.
69.104 End user common line for non-price cap incumbent local exchange carriers.
69.105 Carrier common line for non-price cap local exchange carriers.
69.106 Local switching.
69.108 Transport rate benchmark.
69.109 Information.
69.110 Entrance facilities.
69.111 Tandem-switched transport and tandem charge.
69.112 Direct-trunked transport.
69.113 Non-premium charges for MTS–WATS equivalent services.
69.114 Special access.
69.115 Special access surcharges.
69.116 Universal service fund.
69.117 Lifeline assistance.
69.118 Traffic sensitive switched services.
69.119 Basic service element expedited approval process.
69.120 Line information database.
69.121 Connection charges for expanded interconnection.
69.123 Density pricing zones for special access and switched transport.
69.124 Interconnection charge.
69.125 Dedicated signalling transport.
69.126 Nonrecurring charges.
69.127 Transitional Equal Charge Rule.
69.128 Billing name and address.
69.129 Signalling for tandem switching.

## Subpart C—Computation of Charges for Price Cap Local Exchange Carriers

69.151 Applicability.
69.152 End user common line for price cap local exchange carriers.
69.153 Presubscribed interexchange carrier charge (PICC).
69.154 Per-minute carrier common line charge.
69.155 Per-minute residual interconnection charge.
69.156 Marketing expenses.
69.157 Line port costs in excess of basic, analog service.
69.158 Universal service and user charges.

## Subpart D—Apportionment of Net Investment

69.301 General.

69.302 Net investment.
69.303 Information origination/termination equipment (IOT).
69.304 Subscriber line cable and wire facilities.
69.305 Carrier cable and wire facilities (C&WF).
69.306 Central office equipment (COE).
69.307 General support facilities.
69.308 [Reserved]
69.309 Other investment.
69.310 Capital leases.

### Subpart E—Apportionment of Expenses

69.401 Direct expenses.
69.402 Operating taxes (Account 7200).
69.403 Marketing expenses (Account 6610).
69.404 Telephone operator services expenses in Account 6620.
69.405 Published directory expenses in Account 6620.
69.406 Local business office expenses in Account 6620.
69.407 Revenue accounting expenses in Account 6620.
69.408 All other customer services expenses in Account 6620.
69.409 Corporate operations expenses (Accounts 6710 and 6720).
69.411 Other expenses.
69.412 Non participating company payments/receipts.
69.413 Universal service fund expenses.
69.414 Lifeline assistance expenses.

### Subpart F—Segregation of Common Line Element Revenue Requirement

69.501 General.
69.502 Base factor allocation.

### Subpart G—Exchange Carrier Association

69.601 Exchange carrier association.
69.602 Board of directors.
69.603 Association functions.
69.604 Billing and collection of access charges.
69.605 Reporting and distribution of pool access revenues.
69.606 Computation of average schedule company payments.
69.607 Disbursement of Carrier Common Line residue.
69.608 Carrier Common Line hypothetical net balance.
69.609 End User Common Line hypothetical net balances.
69.610 Other hypothetical net balances.
69.612 Long term and transitional support.

### Subpart H—Pricing Flexibility

69.701 Application of rules in this supbart.
69.703 Definitions.
69.705 Procedure.
69.707 Geographic scope of petition.
69.709 Dedicated transport and special access services other than channel terminations between LEC end offices and customer premises.
69.711 Channel terminations between LEC end offices and customer premises.
69.713 Common line, traffic-sensitive, and tandem-switched transport services.
69.714–69.724 [Reserved]
69.725 Attribution of revenues to particular wire centers.
69.727 Regulatory relief.
69.729 New services.
69.731 Low-end adjustment mechanism.

AUTHORITY: 47 U.S.C. 154, 201, 202, 203, 205, 218, 220, 254, 403.

SOURCE: 48 FR 10358, Mar. 11, 1983, unless otherwise noted.

## Subpart A—General

### § 69.1 Application of access charges.

(a) This part establishes rules for access charges for interstate or foreign access services provided by telephone companies on or after January 1, 1984.

(b) Except as provided in § 69.1(c), charges for such access service shall be computed, assessed, and collected and revenues from such charges shall be distributed as provided in this part. Access service tariffs shall be filed and supported as provided under part 61 of this chapter, except as modified herein.

(c) The following provisions of this part shall apply to telephone companies subject to price cap regulation only to the extent that application of such provisions is necessary to develop the nationwide average carrier common line charge, for purposes of reporting pursuant to §§ 43.21 and 43.22 of this chapter, and for computing initial charges for new rate elements: §§ 69.3(f), 69.106(b), 69.106(f), 69.106(g), 69.109(b), 69.110(d), 69.111(c), 69.111(g)(1), 69.111(g)(2), 69.111(g)(3), 69.111(l), 69.112(d), 69.114(b), 69.114(d), 69.125(b)(2), 69.301 through 69.310, and 69.401 through 69.412. The computation of rates pursuant to these provisions by telephone companies subject to price cap regulation shall be governed by the price cap rules set forth in part 61 of this chapter and other applicable Commission rules and orders.

[48 FR 10358, Mar. 11, 1983, as amended at 55 FR 42385, Oct. 19, 1990; 58 FR 41189, Aug. 3, 1993; 62 FR 40463, July 29, 1997]

**§69.2 Definitions.**

For purposes of the part:

(a) *Access Minutes* or *Access Minutes of Use* is that usage of exchange facilities in interstate or foreign service for the purpose of calculating chargeable usage. On the orginating end of an interstate or foreign call, usage is to be measured from the time the originating end user's call is delivered by the telephone company and acknowledged as received by the interexchange carrier's facilities connected with the originating exchange. On the terminating end of an interstate or foreign call, usage is to be measured from the time the call is received by the end user in the terminating exchange. Timing of usage at both the orginating and terminating end of an interstate or foreign call shall terminate when the calling or called party disconnects, whichever event is recognized first in the originating and terminating end exchanges, as applicable;

(b) *Access Service* includes services and facilities provided for the origination or termination of any interstate or foreign telecommunication;

(c) *Annual revenue requirement* means the sum of the return component and the expense component;

(d) *Association* means the telephone company association described in subpart G of this part;

(e) *Big Three Expenses* are the combined expense groups comprising: Plant Specific Operations Expense, Accounts 6110, 6120, 6210, 6220, 6230, 6310 and 6410; Plant Nonspecific Operations Expenses, Accounts 6510, 6530 and 6540, and Customer Operations Expenses, Accounts 6610 and 6620;

(f) *Big Three Expense Factors* are the ratios of the sum of Big Three Expenses apportioned to each element or category to the combined Big Three Expenses.

(g) *Cable and Wire Facilities* includes all equipment or facilities that are described as cable and wire facilities in the *Separations Manual* and included in Account 2410.

(h) *Carrier Cable and Wire Facilities* means all cable and wire facilities that are not subscriber line cable and wire facilities;

(i) *Central Office Equipment* or *COE* includes all equipment or facilities that are described as Central Office Equipment in the *Separations Manual* and included in Accounts 2210, 2220 and 2230.

(j) *Corporate Operations Expenses* include Executive and Planning Expenses (Account 6710) and General and Administrative Expenses (Account 6720);

(k) *Customer Operations Expenses* include Marketing and Services expenses in Accounts 6610 and 6620, respectively;

(l) *Direct Expense* means expenses that are attributable to a particular category or categories of tangible investment described in subpart D of this part and includes:

(1) Plant Specific Operations expenses in Accounts 6110, 6120, 6210, 6220, 6230, 6310 and 6410; and

(2) Plant Nonspecific Operations Expenses in Accounts 6510, 6530, 6540 and 6560;

(m) *End User* means any customer of an interstate or foreign telecommunications service that is not a carrier except that a carrier other than a telephone compauy shall be deemed to be an ''end user'' when such carrier uses a telecommunications service for administrative purposes and a person or entity that offers telecommunications services exclusively as a reseller shall be deemed to be an ''end user'' if all resale transmissions offered by such reseller originate on the premises of such reseller;

(n) *Entry Switch* means the telephone company switch in which a transport line or trunk terminates;

(o) *Expense Component* means the total expenses and income charges for an annual period that are attributable to a particular element or category;

(p) *Expenses* include allowable expenses in the Uniform System of Accounts, part 32, apportioned to interstate or international services pursuant to the *Separations Manual* and allowable income charges apportioned to interstate and international services pursuant to the *Separations Manual;*

(q) *General Support Facilities* include buildings, land, vehicles, aircraft, work equipment, furniture, office equipment and general purpose computers as described in the *Separations Manual* and included in Account 2110.

(r) *Information Origination/Termination Equipment* includes all equipment or facilities that are described as information origination/termination equipment in the *Separations Manual* and in Account 2310 except information origination/termination equipment that is used by telephone companies in their own operations.

(s) *Interexchange* or the *interexchange category* includes services or facilities provided as an integral part of interstate or foreign telecommunications that is not described as ''access service'' for purposes of this part;

(t) *Level I Contributors.* Telephone companies that are not association Common Line tariff participants, file their own Common Line tariffs effective April 1, 1989, and had a lower than average Common Line revenue requirement per minute of use in 1988 and thus were net contributors (*i.e.*, had a negative net balance) to the association Common Line pool in 1988.

(u) *Level I Receivers.* Telephone companies that are not association Common Line tariff participants, file their own Common Line tariffs effective April 1, 1989, and had a higher than average Common Line revenue requirement per minute of use in 1988 and thus were net receivers (*i.e.*, had a positive net balance) from the association Common Line Pool in 1988.

(v) *Level II Contributors.* A telephone company or group of affiliated telephone companies with fewer than 300,000 access lines and less than $150 million in annual operating revenues that is not an association Common Line tariff participant, that files its own Common Line tariff effective July 1, 1990, and that had a lower than average Common Line revenue requirement per minute of use in 1988 and thus was a net contributor (i.e., had a negative net balance) to the association Common Line pool in 1988.

(w) *Level II Receivers.* A telephone company or group of affiliated telephone companies with fewer than 300,000 access lines and less than $150 million in annual operating revenues that is not an association Common Line tariff participant, that files its own Common Line tariff effective July 1, 1990, and that had a higher than average Common Line revenue requirement per minute of use in 1988 and thus was a net receiver (i.e., had a positive net balance) from the association Common Line pool in 1988.

(x) *Line* or *Trunk* includes, but is not limited to, transmission media such as radio, satellite, wire, cable and fiber optic cable means of transmission;

(y) *Long Term Support (LTS)* means funds that are provided pursuant to § 54.303 of part 54.

(z) *Net Investment* means allowable original cost investment in Accounts 2001 through 2003, 1220 and 1402 that has been apportioned to interstate and foreign services pursuant to the *Separations Manual* from which depreciation, amortization and other reserves attributable to such investment that has been apportioned to interstate and foreign services pursuant to the *Separations Manual* have been subtracted and to which working capital that is attributable to interstate and foreign services has been added;

(aa) *Operating Taxes* include all taxes in Account 7200;

(bb) *Origination* of a service that is switched in a Class 4 switch or an interexchange switch that performs an equivalent function ends when the transmission enters such switch and *termination* of such a service begins when the transmission leaves such a switch, except that;

(1) Switching in a Class 4 switch or transmission between Class 4 switches that is not deemed to be interexchange for purposes of the Modified Final Judgement entered August 24, 1982, in *United States v Western Electric Co.*, D.C. Civil Action No. 82–0192, will be ''origination'' or ''termination'' for purposes of this part; and

(2) *Origination* and *Termination* does not include the use of any part of a line, trunk or switch that is not owned or leased by a telephone company;

(cc) *Origination* of any service other than a service that is switched in a Class 4 switch or a switch that performs an equivalent function ends and ''termination'' of any such service begins at a point of demarcation that corresponds with the point of demarcation that is used for a service that is switched in a Class 4 switch or a switch that performs an equivalent function;

(dd) *Private Line* means a line that is used exclusively for an interexchange service other than MTS, WATS or an MTS–WATS equivalent service, including a line that is used at the closed end of an FX WATS or CCSA service or any service that is substantially equivalent to a CCSA service;

(ee) *Public Telephone* is a telephone provided by a telephone company through which an end user may originate interstate or foreign telecommunications for which he pays with coins or by credit card, collect or third number billing procedures;

(ff) *Return Component* means net investment attributable to a particular element or category multiplied by the authorized annual rate of return;

(gg) *Subscriber Line Cable and Wire Facilities* means all lines or trunks on the subscriber side of a Class 5 or end office switch, including lines or trunks that do not terminate in such a switch, except lines or trunks that connect an interexchange carrier;

(hh) *Telephone company* or *local exchange carrier* as used in this part means an incumbent local exchange carrier as defined in section 251(h)(1) of the 1934 Act as amended by the 1996 Act.

(ii) *Transitional Support* (TRS) means funds provided by telephone companies that are not association Common Line tariff participants, but were net contributors to the association Common Line pool in 1988, to telephone companies that are not association Common Line tariff participants and were net receivers from the association Common Line pool in 1988;

(jj) *Unit of Capacity* means the capability to transmit one conversation;

(kk) *WATS Access Line* means a line or trunk that is used exclusively for WATS service.

(ll) *Equal access investment and equal access expenses* mean equal access investment and expenses as defined for purposes of the part 36 separations rules.

(mm) *Basic Service Elements* are optional unbundled features that enhanced service providers may require or find useful in the provision of enhanced services, as defined in Amendments of part 69 of the Commission's rules relating to the Creation of Access Charge Subelements for Open Network Architecture, Report and Order, 6 FCC Rcd , CC Docket No. 89–79, FCC 91–186 (1991).

(nn) *Dedicated Signalling Transport* means transport of out-of-band signalling information between an interexchange carrier or other person's common channel signalling network and a telephone company's signalling transport point on facilities dedicated to the use of a single customer.

(oo) *Direct-trunked transport* means transport on circuits dedicated to the use of a single interexchange carrier or other person, without switching at the tandem,

(1) Between the serving wire center and the end office, or

(2) Between two customer-designated telephone company offices.

(pp) *End Office* means the telephone company office from which the end user receives exchange service.

(qq) *Entrance Facilities* means transport from the interexchange carrier or other person's point of demarcation to the serving wire center.

(rr) *Serving Wire Center* means the telephone company central office designated by the telephone company to serve the geographic area in which the interexchange carrier or other person's point of demarcation is located.

(ss) *Tandem-switched transport* means transport of traffic that is switched at a tandem switch—

(1) Between the serving wire center and the end office, or

(2) Between the telephone company office containing the tandem switching equipment, as described in §36.124 of this chapter, and the end office.

Tandem-switched transport between a serving wire center and an end office consists of circuits dedicated to the use of a single interexchange carrier or other person from the serving wire center to the tandem (although this dedicated link will not exist if the serving wire center and the tandem are located in the same place) and circuits used in common by multiple interexchange carriers or other persons from the tandem to the end office.

(tt) [Reserved]

(uu) *Price cap regulation* means the method of regulation of dominant carriers provided in §§ 61.41 through 61.49 of this chapter.

(vv) *Signalling for tandem switching* means the carrier identification code (CIC) and the OZZ code, or equivalent information needed to perform tandem switching functions. The CIC identifies the interexchange carrier and the OZZ identifies the interexchange carrier trunk to which traffic should be routed.

[52 FR 37309, Oct. 6, 1987, as amended at 53 FR 28395, July 28, 1988; 53 FR 30059, Aug. 10, 1988; 54 FR 3456, Jan. 24, 1989; 54 FR 11718, Mar. 22, 1989; 55 FR 6990, Feb. 28, 1990; 56 FR 33880, July 24, 1991; 57 FR 54719, Nov. 20, 1992; 58 FR 41189, Aug. 3, 1993; 59 FR 32930, June 27, 1994; 62 FR 31932, June 11, 1997; 62 FR 32962, June 17, 1997; 64 FR 46593, Aug. 26, 1999]

### § 69.3 Filing of access service tariffs.

(a) Except as provided in paragraphs (g) and (h) of this section, a tariff for access service shall be filed with this Commission for a two-year period. Such tariffs shall be filed with a scheduled effective date of July 1. Such tariff filings shall be limited to rate level changes.

(b) The requirements imposed by paragraph (a) of this section shall not preclude the filing of revisions to those annual tariffs that will become effective on dates other than July 1.

(c) Any access service tariff filing, the filing of any petitions for rejection, investigation or suspension and the filing of any responses to such petitions shall comply with the applicable rules of this Commission relating to tariff filings.

(d) The association shall file a tariff as agent for all telephone companies that participate in an association tariff.

(e) A telephone company or group of telephone companies may file a tariff that is not an association tariff. Such a tariff may cross-reference the association tariff for some access elements and include separately computed charges of such company or companies for other elements. Any such tariff must comply with the requirements hereinafter provided:

(1) Such a tariff must cross reference association charges for the Carrier Common Line and End User Common Line element or elements if such company or companies participate in the pooling of revenues and revenue requirements for such elements.

(2) Such a tariff that cross-references an association charge for any end user access element must cross-reference association charges for all end user access elements;

(3) Such a tariff that cross-references an association charge for any carrier's carrier access element other than the Carrier Common Line element must cross-reference association charges for all carrier's carrier access charges other than the Carrier Common Line element;

(4) Except for charges subject to price cap regulation as that term is defined in § 61.3(v) of this chapter, any charge in such a tariff that is not an association charge must be computed to reflect the combined investment and expenses of all companies that participate in such a charge;

(5) A telephone company or companies that elect to file such a tariff for 1984 access charges shall notify AT&T on or before the 40th day after the release of the Commission order adopting this part;

(6) A telephone company or companies that elect to file such a tariff shall notify the association not later than December 31 of the preceding year, if such company or companies did not file such a tariff in the preceding biennial period or cross-reference association charges in such preceding period that will be cross-referenced in the new tariff. A telephone company or companies that elect to file such a tariff not in the biennial period shall file its tariff to become effective July 1 for a period of one year. Thereafter, such telephone company or companies must file its tariff pursuant to paragraphs (f)(1) or (f)(2) of this section.

(7) Such a tariff shall not contain charges for any access elements that are disaggregated or deaveraged within a study area that is used for purposes of jurisdictional separations, except as otherwise provided in this chapter.

(8) Such a tariff shall not contain charges included in the billing and collection category.

(9) A telephone company or group of affiliated telephone companies that elects to file it own Carrier Common Line tariff effective April 1, 1989 shall notify the association not later than August 30 of the preceding year that it will no longer participate in the association tariff. A telephone company or group of affiliated telephone companies that elects to file its own Carrier Common Line tariff effective July 1, 1990 or thereafter pursuant to §69.3(a) shall notify the association not later than December 31 of the preceding year that it will no longer participate in the association tariff. A telephone company or group of affiliated telephone companies that electes to file its own Carrier Common Line tariff for one its study areas shall file its own Carrier Common Line tariff(s) for all of its study areas.

(10) Any data supporting a tariff that is not an association tariff shall be consistent with any data that the filing carrier submitted to the association.

(11) Any changes in Association common line tariff participation and Long Term and Transitional Support resulting from the merger or acquisition of telephone properties are to be made effective on the next annual access tariff filing effective date following consummation of the merger or acquisition transaction, in accordance with the provisions of §69.3(e)(9).

(f)(1) A tariff for access service provided by a telephone company that is required to file an access tariff pursuant to §61.38 of this Chapter shall be filed for a biennial period and with a scheduled effective date of July 1 of any even numbered year.

(2) A tariff for access service provided by a telephone company that may file an access tariff pursuant to §61.39 of this Chapter shall be filed for a biennial period and with a scheduled effective date of July 1 of any odd numbered year. Any such telephone company that does not elect to file an access tariff pursuant to the §61.39 procedures, and does not participate in the Association tariff, and does not elect to become subject to price cap regulation, must file an access tariff pursuant to §61.38 for a biennial period and with a scheduled effective date of July 1 of any even numbered year.

(3) For purposes of computing charges for access elements other than Common Line elements to be effective on July 1 of any even-numbered year, the association may compute rate changes based upon statistical methods which represent a reasonable equivalent to the cost support information otherwise required under part 61 of this chapter.

(g) The following rules apply to telephone company participation in the Association common line pool for telephone companies involved in a merger or acquisition.

(1) Notwithstanding the requirements of §69.3(e)(9), any Association common line tariff participant that is party to a merger or acquisition may continue to participate in the Association common line tariff.

(2) Notwithstanding the requirements of §69.3(e)(9), any Association common line tariff participant that is party to a merger or acquisition may include other telephone properties involved in the transaction in the Association common line tariff, provided that the net addition of common lines to the Association common line tariff resulting from the transaction in not greater than 50,000, and provided further that, if any common lines involved in a merger or acquisition are returned to the Association common line tariff, all of the common lines involved in the merger or acquisition must be returned to the Association common line tariff.

(3) Telephone companies involved in mergers or acquisitions that wish to have more than 50,000 common lines reenter the Association common line pool must request a waiver of §69.3(e)(9). If the telephone company has met all other legal obligations, the waiver request will be deemed granted on the sixty-first (61st) day from the date of public notice inviting comment on the requested waiver unless:

(i) The merger or acquisition involves one or more partial study areas;

(ii) The waiver includes a request for confidentiality of some or all of the materials supporting the request;

(iii) The waiver includes a request to return only a portion of the telephone

properties involved in the transaction to the Association common line tariff;

(iv) The Commission rejects the waiver request prior to the expiration of the sixty-day period;

(v) The Commission requests additional time or information to process the waiver application prior to the expiration of the sixty-day period; or

(vi) A party, in a timely manner, opposes a waiver request or seeks conditional approval of the waiver in response to our public notice of the waiver request.

(h) Local exchange carriers subject to price cap regulation as that term is defined in §61.3(ee) of this chapter, shall file with this Commission a price cap tariff for access service for an annual period. Such tariffs shall be filed to meet the notice requirements of §61.58 of this chapter, with a scheduled effective date of July 1. Such tariff filings shall be limited to changes in the Price Cap Indexes, rate level changes (with corresponding adjustments to the affected Actual Price Indexes and Service Band Indexes), and the incorporation of new services into the affected indexes as required by §61.49 of this chapter.

(i) The following rules apply to the withdrawal from Association tariffs under the provision of paragraph (e)(6) or (e)(9) of this section or both by telephone companies electing to file price cap tariffs pursuant to paragraph (h) of this section.

(1) In addition to the withdrawal provisions of paragraphs (e) (6) and (9) of this section, a telephone company or group of affiliated telephone companies that participates in one or more Association tariffs during the current tariff year and that elects to file price cap tariffs or optional incentive regulation tariffs effective July 1 of the following tariff year, shall give the Association at least 6 months' notice that it is withdrawing from Association tariffs, subject to the terms of this section, to participate in price cap regulation or optional incentive regulation.

(2) The Association shall maintain records of such withdrawals sufficient to discharge its obligations under these Rules and to detect efforts by such companies or their affiliates to rejoin any Association tariffs in violation of the provisions of paragraph (i)(4) of this section.

(3) Notwithstanding the provisions of paragraphs (e) (3), (6), and (9) of this section, in the event a telephone company withdraws from all Association tariffs for the purpose of filing price cap tariffs or optional incentive plan tariffs, such company shall exclude from such withdrawal all ''average schedule'' affiliates and all affiliates so excluded shall be specified in the withdrawal. However, such company may include one or more ''average schedule'' affiliates in price cap regulation or optional incentive plan regulation provided that each price cap or optional incentive plan affiliate relinquishes ''average schedule'' status and withdraws from all Association tariffs and any tariff filed pursuant to §61.39(b)(2) of this chapter. See generally §§69.605(c), 61.39(b) of this chapter; MTS and WATS Market Structure: Average Schedule Companies, Report and Order, 103 FCC 2d 1026–1027 (1986).

(4) If a telephone company elects to withdraw from Association tariffs and thereafter becomes subject to price cap regulation as that term is defined in §61.3(v) of this chapter, neither such telephone company nor any of its withdrawing affiliates shall thereafter be permitted to participate in any Association tariffs.

(j) [Reserved]

(47 U.S.C. 154 (i) and (j), 201, 202, 203, 205, 218 and 403 and 5 U.S.C. 553)

[48 FR 10358, Mar. 11, 1983, as amended at 48 FR 43017, Sept. 21, 1983; 50 FR 41356, Oct. 10, 1985; 51 FR 6119, Feb. 20, 1986; 51 FR 42236, Nov. 24, 1986; 52 FR 21540, June 8, 1987; 52 FR 37310, Oct. 6, 1987; 53 FR 36289, Sept. 19, 1988; 54 FR 39534, Sept. 27, 1989; 55 FR 6990, Feb. 28, 1990; 55 FR 42385, Oct. 19, 1990; 55 FR 50558, Dec. 7, 1990; 58 FR 36149, July 6, 1993; 64 FR 46593, Aug. 26, 1999; 64 FR 51266, Sept. 22, 1999; 65 FR 57743, Sept. 26, 2000]

## § 69.4 Charges to be filed.

(a) The end user charges for access service filed with this Commission shall include charges for the End User Common Line element, and for line port costs in excess of basic, analog service.

(b) Except as provided in paragraphs (c), (e), and (h) of this section, and in §69.118, the carrier's carrier charges for

access service filed with this Commission shall include charges for each of the following elements:

(1) [Reserved]

(2) Carrier common line;

(3) Local switching;

(4) Information;

(5) Tandem-switched transport;

(6) Direct-trunked transport;

(7) Special access; and

(8) Line information database;

(9) Entrance facilities.

(c) For all tariffs filed with this Commission that become effective after March 31, 1989, the carrier's carrier charges for access service shall include charges for each of the elements listed in §69.4(b) and for each of the following elements:

(1) Universal Service Fund;

(2) Lifeline Assistance.

(d) Recovery of Contributions to the Universal Service Support Mechanisms by Incumbent Local Exchange Carriers.

(1) Incumbent local exchange carriers other than price cap local exchange carriers may recover their contributions to the universal service support mechanisms through carriers' carrier charges.

(i) [Reserved]

(ii) Non-price cap local exchange carriers may recover their contributions to the universal service mechanism by applying a factor to their carrier common line charge revenue requirements.

(2)(i) In lieu of the carriers' carrier charges described in paragraph (d)(1) of this section, price cap local exchange carriers may recover their contributions to the universal service support mechanisms through explicit, interstate, end-user charges that are equitable and nondiscriminatory.

(ii) To the extent that price cap local exchange carriers implement explicit, interstate, end-user charges to recover their contributions to the universal service support mechanisms, they must make corresponding reductions in their access charges to avoid any double recovery.

(e) The carrier's carrier charges for access service filed with this Commission by the telephone companies specified in §64.1401(a) of this chapter shall include an element for connection charges for expanded interconnection. The carrier's carrier charges for access service filed with this Commission by the telephone companies not specified in §64.1401(a) of this chapter may include an element for connection charges for expanded interconnection.

(f) [Reserved]

(g)(1) Local exchange carriers subject to price cap regulation, as that term is defined in §61.3(x) of this chapter, may establish appropriate rate elements for a new service, within the meaning of §61.3(t) of this chapter, in any tariff filing with a scheduled effective date after October 22, 1999.

(2) The Chief, Common Carrier Bureau shall issue a Public Notice of the filing of a petition under paragraph (g)(1)(ii) of this section. Parties may file comments in response to such a petition within seven days of the Public Notice. The local exchange carrier shall have authority to introduce new rate elements under paragraph (g)(1)(ii) of this section, after the expiration of ten days from issuance of the Public Notice, unless the Chief, Common Carrier Bureau informs the LEC that the LEC has not demonstrated that its new service meets the standards of paragraph (g)(1)(ii) of this section. The incumbent LEC may then file one subsequent petition for authorization of that service under paragraph (g)(1)(ii) of this section.

(h) In addition to the charges specified in paragraph (b) of this section, the carrier's carrier charges for access service filed with this Commission by price cap local exchange carriers shall include charges for each of the following elements:

(1) Presubscribed interexchange carrier;

(2) Per-minute residual interconnection;

(3) Dedicated local switching trunk port;

(4) Shared local switching trunk pork;

(5) Dedicated tandem switching trunk port;

(6) [Reserved]

(7) Multiplexers associated with tandem switching.

(i) Paragraphs (b) and (h) of this section are not applicable to a price cap local exchange carrier to the extent

that it has been granted the pricing flexibility in § 69.727(b)(1).

[48 FR 43017, Sept. 21, 1983, as amended at 52 FR 21540, June 8, 1987; 52 FR 37310, Oct. 6, 1987; 54 FR 11718, Mar. 22, 1989; 56 FR 33880, July 24, 1991; 57 FR 24380, June 9, 1992; 57 FR 54332, Nov. 18, 1993; 57 FR 54719, Nov. 20, 1993; 58 FR 30995, May 28, 1993; 62 FR 4660, Jan. 31, 1997; 62 FR 31932, June 11, 1997; 62 FR 56132, Oct. 29, 1997; 64 FR 51266, Sept. 22, 1999; 64 FR 60359, Nov. 5, 1999; 65 FR 38701, June 21, 2000; 65 FR 57743, Sept. 26, 2000]

### § 69.5 Persons to be assessed.

(a) End user charges shall be computed and assessed upon public end users, and upon providers of public telephones, as defined in this subpart, and as provided in subpart B of this part.

(b) Carrier's carrier charges shall be computed and assessed upon all interexchange carriers that use local exchange switching facilities for the provision of interstate or foreign telecommunications services.

(c) Special access surcharges shall be assessed upon users of exchange facilities that interconnect these facilities with means of interstate or foreign telecommunications to the extent that carrier's carrier charges are not assessed upon such interconnected usage. As an interim measure pending the development of techniques accurately to measure such interconnected use and to assess such charges on a reasonable and non-discriminatory basis, telephone companies shall assess special access surcharges upon the closed ends of private line services and WATS services pursuant to the provisions of § 69.115 of this part.

(d) [Reserved]

(47 U.S.C. 154 (i) and (j), 201, 202, 203, 205, 218 and 403 and 5 U.S.C. 553)

[48 FR 43017, Sept. 21, 1983, as amended at 51 FR 10840, Mar. 31, 1986; 51 FR 33752, Sept. 23, 1986; 52 FR 21540, June 8, 1987; 54 FR 50624, Dec. 8, 1989; 61 FR 65364, Dec. 12, 1996; 64 FR 60359, Nov. 5, 1999]

## Subpart B—Computation of Charges

### § 69.101 General.

Except as provided in § 69.1 and subpart C of this part, charges for each access element shall be computed and assessed as provided in this subpart.

[55 FR 42386, Oct. 19, 1990]

### § 69.104 End user common line for non-price cap incumbent local exchange carriers.

(a) This section is applicable only to incumbent local exchange carriers that are not subject to price cap regulation as that term is defined in § 61.3(x) of this chapter. A charge that is expressed in dollars and cents per line per month shall be assessed upon end users that subscribe to local exchange telephone service or Centrex service to the extent they do not pay carrier common line charges. A charge that is expressed in dollars and cents per line per month shall be assessed upon providers of public telephones. Such charges shall be assessed for each line between the premises of an end user, or public telephone location, and a Class 5 office that is or may be used for local exchange service transmissions.

(b) Charges to multi-line subscribers shall be computed by multiplying a single line rate by the number of lines used by such subscriber.

(c) Except as provided in § 69.104(d) through (h), the single line rate or charge shall be computed by dividing one-twelfth of the projected annual revenue requirement for the End User Common Line element by the projected average number of local exchange service subscriber lines in use during such annual period.

(d)(1) If the monthly charge computed in accordance with § 69.104(c) exceeds $6, the charge for each local exchange service subscriber line, except a residential line, a single-line business line, or a line used for Centrex-CO service that was in place or on order as of July 27, 1983, shall be $6.

(2) The charge for each subscriber line associated with a public telephone shall be equal to the monthly charge computed in accordance with paragraph (d)(1) of this section.

(e) The monthly charge for each residential and single line business local exchange service subscriber shall be the charge computed in accordance with paragraph (c) of this section, or $3.50, whichever is lower.

(f) Except as provided in §69.104 (j) and (k), the charge for each residential local exchange service subscriber line shall be the same as the charge for each single line business local exchange service subscriber line.

(g) A line shall be deemed to be a residential line if the subscriber pays a rate for such line that is described as a residential rate in the local exchange service tariff.

(h) A line shall be deemed to be a single line business line if the subscriber pays a rate that is not described as a residential rate in the local exchange service tariff and does not obtain more than one such line from a particular telephone company.

(i) The End User Common Line charge for each multi-party subscriber shall be assessed as if such subscriber had subscribed to single-party service.

(j) Until December 31, 1997, the End User Common Line charge for a residential subscriber shall be 50% of the charge specified in §69.104(c) and (d) if the residential local exchange service rate for such subscribers is reduced by an equivalent amount, provided, That such local exchange service rate reduction is based upon a means test that is subject to verification.

(k) Paragraphs (k)(1) through (2) of this section are effective until December 31, 1997.

(1) The End User Common Line charge for residential subscribers shall be reduced to the extent of the state assistance as calculated in paragraph (k)(2) of this section, or waived in full if the state assistance equals or exceeds the residential End User Common Line charge under the circumstances described below. In order to qualify for this waiver, the subscriber must be eligible for and receive assistance or benefits provided pursuant to a narrowly targeted telephone company lifeline assistance program, requiring verification of eligibility, implemented by the State or local telephone company. A state or local telephone company wishing to implement this End User Common Line reduction or waiver for its subscribers shall file information with the Commission Secretary demonstrating that its plan meets the criteria set out in this section and showing the amount of state assistance per subscriber as described in paragraph (k)(2) of this section. The reduction or waiver of the End User Common Line charge shall be available as soon as the Commission certifies that the State or local telephone plan satisfies the criteria set out in this paragraph and the relevant tariff provisions become effective.

(2)(i) The State assistance per subscriber shall be equal to the difference between the charges to be paid by the participating subscribers and those to be paid by other subscribers for comparable monthly local exchange service, service connections and customer deposits, except that benefits or assistance for connection charges and deposit requirements may only be counted once annually. In order to be included in calculating the state assistance, such benefits must be for a single telephone line to the household's principal residence.

(ii) The monthly state assistance per participating subcriber shall be calculated by adding the amounts calculated in paragraphs (k)(2)(ii) (A) and (B) of this section.

(A) The amount of the monthly State assistance per participating subscriber for local exchange service shall be calculated by dividing the annual difference between charges paid by all participating subscribers for residential local exchange service and the amount which would have been charged to non-qualifying subscribers for comparable service by twelve times the number of subscribers participating in the State assistance program. Estimates may be used when historic data are not available.

(B) The amount of the monthly State assistance for service connections and customer deposits per participating subscriber shall be calculated by determining the annual amount of the reductions in these charges for participating subscribers each year and dividing this amount by twelve times the number of participating subscribers. Estimates may be used when historic data are not available.

(l) Until December 31, 1997, in connection with the filing of access tariffs pursuant to §69.3(a), telephone companies shall calculate for the association their projected revenue requirements

attributable to the operation of paragraphs (j) through (k) of this section. The projected amount will be adjusted by the association to reflect the actual lifeline assistance benefits paid in the previous period. If the actual benefits exceeded the projected amount of that period, the differential will be added to the projection for the ensuing period. If the actual benefits were less than the projected amount for that period, the differential will be subtracted from the projection for the ensuing period. Until December 31, 1997, the association shall so adjustamounts to the Lifeline Assistance revenue requirement, bill and collect such amounts from interexchange carriers pursuant to § 69.117 and distribute the funds to qualifying telephone companies pursuant to § 69.603(d).

(m) No charge shall be assessed for any WATS access line.

[48 FR 10358, Mar. 11, 1983, as amended at 48 FR 43018, Sept. 21, 1983; 52 FR 21540, June 8, 1987; 53 FR 28395, July 28, 1988; 61 FR 65364, Dec. 12, 1996; 62 FR 31933, June 11, 1997; 62 FR 32962, June 17, 1997]

### § 69.105 Carrier common line for non-price cap local exchange carriers.

(a) This section is applicable only to local exchange carriers that are not subject to price cap regulation as that term is defined in § 61.3(x) of this chapter. A charge that is expressed in dollars and cents per line per access minute of use shall be assessed upon all interexchange carriers that use local exchange common line facilities for the provision of interstate or foreign telecommunications services, except that the charge shall not be assessed upon interexchange carriers to the extent they resell MTS or MTS-type services of other common carriers (OCCs).

(b)(1) For purposes of this section and § 69.113:

(i) A carrier or other person shall be deemed to receive premium access if access is provided through a local exchange switch that has the capability to provide access for an MTS–WATS equivalent service that is substantially equivalent to the access provided for MTS or WATS, except that access provided for an MTS–WATS equivalent service that does not use such capability shall not be deemed to be premium access until six months after the carrier that provides such MTS–WATS equivalent service receives actual notice that such equivalent access is or will be available at such switch;

(ii) The term *open end* of a call describes the origination or termination of a call that utilizes exchange carrier common line plant (a call can have no, one, or two open ends); and

(iii) All open end minutes on calls with one open end (*e.g.,* an 800 or FX call) shall be treated as terminating minutes.

(2) For association Carrier Common Line tariff participants:

(i) The premium originating Carrier Common Line charge shall be one cent per minute, except as described in § 69.105(b)(3), and

(ii) The premium terminating Carrier Common Line charge shall be computed as follows:

(A) For each telephone company subject to price cap regulation, multiply the company's proposed premium originating rate by a number equal to the sum of the premium originating base period minutes and a number equal to 0.45 multiplied by the non-premium originating base period minutes of that telephone company;

(B) For each telephone company subject to price cap regulation, multiply the company's proposed premium terminating rate by a number equal to the sum of the premium terminating base period minutes and a number equal to 0.45 multiplied by the non-premium terminating base period minutes of that telephone company;

(C) Sum the numbers computed in paragraphs (b)(2)(ii) (A) and (B) of this section for all companies subject to price cap regulation;

(D) From the number computed in paragraph (b)(2)(ii)(C) of this section, subtract a number equal to one cent times the sum of the premium originating base period minutes and a number equal to 0.45 multiplied by the non-premium originating base period minutes of all telephone companies subject to price cap regulation, and;

(E) Divide the number computed in paragraph (b)(2)(ii)(D) of this section by the sum of the premium terminating base period minutes and a number equal to 0.45 multiplied by the non-

premium terminating base period minutes of all telephone companies subject to price cap regulation.

(3) If the calculations described in § 69.105(b)(2) result in a per minute charge on premium terminating minutes that is less than once cent, both the originating and terminating premium charges for the association CCL tariff participants shall be computed by dividing the number computed in paragraph (b)(2)(ii)(C) of this section by a number equal to the sum of the premium originating and terminating base period minutes and a number equal to 0.45 multiplied by the sum of the non-premium originating and terminating base period minutes of all telephone companies subject to price cap regulation.

(4) The Carrier Common Line charges of telephone companies that are not association Carrier Common Line tariff participants shall be computed at the level of Carrier Common Line access element aggregation selected by such telephone companies pursuant to § 69.3(e)(7). For each such Carrier Common Line access element tariff—

(i) The premium originating Carrier Common Line charge shall be one cent per minute, and

(ii) The premium terminating Carrier Common Line charge shall be computed by subtracting the projected revenues generated by the originating Carrier Common Line charges (both premium and non-premium) from the Carrier Common Line revenue requirement for the companies participating in that tariff, and dividing the remainder by the sum of the projected premium terminating minutes and a number equal to .45 multiplied by the projected non-premium terminating minutes for such companies.

(5) If the calculations described in § 69.105(b)(4) result in a per minute charge on premium terminating minutes that is less than one cent, both the originating and terminating premium charges for the companies participating in said Carrier Common Line tariff shall be computed by dividing the projected Carrier Common Line revenue requirement for such companies by the sum of the projected premium minutes and a number equal to .45 multiplied by the projected non-premium minutes for such companies.

(6) Telephone companies that are not association Carrier Common Line tariff participants shall submit to the Commission and to the association whatever data the Commission shall determine are necessary to calculate the charges described in this section.

(c) Any interexchange carrier shall receive a credit for Carrier Common Line charges to the extent that it resells services for which these charges have already been assessed (*e.g.*, MTS or MTS-type service of other common carriers).

[51 FR 10841, Mar. 31, 1986, as amended at 52 FR 21541, June 8, 1987; 54 FR 6293, Feb. 9, 1989; 55 FR 42386, Oct. 19, 1990; 56 FR 21618, May 10, 1991; 62 FR 31933, June 11, 1997]

### § 69.106 Local switching.

(a) Except as provided in § 69.118, charges that are expressed in dollars and cents per access minute of use shall be assessed by local exchange carriers that are not subject to price cap regulation upon all interexchange carriers that use local exchange switching facilities for the provision of interstate or foreign services.

(b) The per minute charge described in paragraph (a) of this section shall be computed by dividing the projected annual revenue requirement for the Local Switching element, excluding any local switching support received by the carrier pursuant to § 54.301 of this chapter, by the projected annual access minutes of use for all interstate or foreign services that use local exchange switching facilities.

(c) If end users of an interstate or foreign service that uses local switching facilities pay message unit charges for such calls in a particular exchange, a credit shall be deducted from the Local Switching element charges to such carrier for access service in such exchange. The per minute credit for each such exchange shall be multiplied by the monthly access minutes for such service to compute the monthly credit to such a carrier.

(d) If all local exchange subscribers in such exchange pay message unit charges, the per minute credit described in paragraph (c) of this section shall be computed by dividing total

message unit charges to all subscribers in a particular exchange in a representative month by the total minutes of use that were measured for purposes of computing message unit charges in such month.

(e) If some local exchange subscribers pay message unit charges and some do not, a per minute credit described in paragraph (c) of this section shall be computed by multiplying a credit computed pursuant to paragraph (d) of this section by a factor that is equal to total minutes measured in such month for purposes of computing message unit charges divided by the total local exchange minutes in such month.

(f) Except as provided in § 69.118, price cap local exchange carriers shall establish rate elements for local switching as follows:

(1) Price cap local exchange carriers shall separate from the projected annual revenues for the Local Switching element those costs projected to be incurred for ports (including cards and DS1/voice-grade multiplexers required to access end offices equipped with analog switches) on the trunk side of the local switch. Price cap local exchange carriers shall further identify costs incurred for dedicated trunk ports separately from costs incurred for shared trunk ports.

(i) Price cap local exchange carriers shall recover dedicated trunk port costs identified pursuant to paragraph (f)(1) of this section through flat-rated charges expressed in dollars and cents per trunk port and assessed upon the purchaser of the dedicated trunk terminating at the port.

(ii) Price cap local exchange carriers shall recover shared trunk port costs identified pursuant to paragraph (f)(1) of this section through charges assessed upon purchasers of shared transport. This charge shall be expressed in dollars and cents per access minute of use. The charge shall be computed by dividing the projected costs of the shared ports by the historical annual access minutes of use calculated for purposes of recovery of common transport costs in § 69.111(c).

(2) Price cap local exchange carriers shall recover the projected annual revenues for the Local Switching element that are not recovered in paragraph (f)(1) of this section through charges that are expressed in dollars and cents per access minute of use and assessed upon all interexchange carriers that use local exchange switching facilities for the provision of interstate or foreign services. The maximum charge shall be computed by dividing the projected remainder of the annual revenues for the Local Switching element by the historical annual access minutes of use for all interstate or foreign services that use local exchange switching facilities.

(g) On or after July 1, 1998, a price cap local exchange carrier may recover signalling costs associated with call setup through a call setup charge imposed upon all interstate interexchange carriers that use that local exchange carrier's facilities to originate or terminate interstate interexchange or foreign services. This charge must be expressed as dollars and cents per call attempt and may be assessed on originating calls handed off to the interexchange carrier's point of presence and on terminating calls received from an interexchange carrier's point of presence, whether or not that call is completed at the called location. Price cap local exchange carriers may not recover through this charge any costs recovered through other rate elements.

[52 FR 37310, Oct. 6, 1987, as amended at 56 FR 33881, July 24, 1991; 62 FR 31933, June 11, 1997; 62 FR 40463, July 29, 1997]

### § 69.108 Transport rate benchmark.

(a) For transport charges computed in accordance with this subpart, the DS3-to-DS1 benchmark ratio shall be calculated as follows: the telephone company shall calculate the ratio of:

(1) The total charge for a 1.609 km (1 mi) channel termination, 16.09 km (10 mi) of interoffice transmission, and one DS3 multiplexer using the telephone company's DS3 special access rates to;

(2) The total charge for a 1.609 km (1 mi) channel termination plus 16.09 km (10 mi) of interoffice transmission using the telephone company's DS1 special access rates.

(b) Initial transport rates will generally be presumed reasonable if they are based on special access rates with a DS3-to-DS1 benchmark ratio of 9.6 to 1 or higher.

(c) If a telephone company's initial transport rates are based on special access rates with a DS3-to-DS1 benchmark ratio of less than 9.6 to 1, those initial transport rates will generally be suspended and investigated absent a substantial cause showing by the telephone company. Alternatively, the telephone company may adjust its initial transport rates so that the DS3-to-DS1 ratio calculated as described in paragraph (a) of this section of those rates is 9.6 or higher. In that case, initial transport rates that depart from existing special access rates effective on September 1, 1992 so as to be consistent with the benchmark will be presumed reasonable only so long as the ratio of revenue recovered through the interconnection charge to the revenue recovered through facilities-based charges is the same as it would be if the telephone company's existing special access rates effective on September 1, 1992 were used.

[58 FR 41189, Aug. 3, 1993, as amended at 58 FR 44952, Aug. 25, 1993; 58 FR 45267, Aug. 27, 1993]

### §69.109 Information.

(a) A charge shall be assessed upon all interexchange carriers that are connected to assistance boards through interexchange directory assistance trunks.

(b) Except as provided in §69.118, if such connections are maintained exclusively by carriers that offer MTS, the projected annual revenue requirement for the Information element shall be divided by 12 to compute the monthly assessment to such carriers.

(c) If such connections are provided to additional carriers, charges shall be established that reflect the relative use of such directory assistance service by such interexchange carriers.

[48 FR 10358, Mar. 11, 1983, as amended at 56 FR 33881, July 24, 1991]

### §69.110 Entrance facilities.

(a) A flat-rated entrance facilities charge expressed in dollars and cents per unit of capacity shall be assessed upon all interexchange carriers and other persons that use telephone company facilities between the interexchange carrier or other person's point of demarcation and the serving wire center.

(b)(1) For telephone companies subject to price cap regulation, initial entrance facilities charges based on special access channel termination rates for equivalent voice grade, DS1, and DS3 services as of September 1, 1992, adjusted for changes in the price cap index calculated for the July 1, 1993 annual filing for telephone companies subject to price cap regulation, generally shall be presumed reasonable if the benchmark defined in §69.108 is satisfied. Entrance facilities charges may be distance-sensitive. Distance shall be measured as airline kilometers between the point of demarcation and the serving wire center.

(2) For telephone companies not subject to price cap regulation, entrance facilities charges based on special access channel termination rates for equivalent voice grade, DS1, and DS3 services generally shall be presumed reasonable if the benchmark defined in §69.108 is satisfied. Entrance facilities charges may be distance-sensitive. Distance shall be measured as airline kilometers between the point of demarcation and the serving wire center.

(c) If the telephone company employs distance-sensitive rates:

(1) A distance-sensitive component shall be assessed for use of the transmission facilities, including any intermediate transmission circuit equipment between the end points of the entrance facilities; and

(2) A nondistance-sensitive component shall be assessed for use of the circuit equipment at the ends of the transmission links.

(d) Telephone companies shall apply only their shortest term special access rates in setting entrance facilities charges.

(e) Except as provided in paragraphs (f), (g), and (h) of this section, and subpart H of this part, telephone companies shall not offer entrance facilities based on term discounts or volume discounts for multiple DS3s or any other service with higher volume than DS3.

(f) Except in the situations set forth in paragraphs (g) and (h) of this section, telephone companies may offer term and volume discounts in entrance facilities charges within each study

area used for the purpose of jurisdictional separations, in which interconnectors have taken either:

(1) At least 100 DS1-equivalent cross-connects for the transmission of switched traffic (as described in § 69.121(a)(1) of this chapter) in offices in the study area that the telephone company has assigned to the lowest priced density pricing zone (zone 1) under an approved density pricing zone plan as described in §§ 61.38(b)(4) and 61.49(k) of this chapter; or

(2) An average of at least 25 DS1-equivalent cross-connects for the transmission of switched traffic per office assigned to the lowest priced density pricing zone (zone 1).

(g) In study areas in which the telephone company has implemented density zone pricing, but no offices have been assigned to the lowest price density pricing zone (zone 1), telephone companies may offer term and volume discounts in entrance facilities charges within the study area when interconnectors have taken at least 5 DS1-equivalent cross-connects for the transmission of switched traffic (as described in § 69.121(a)(1) of this chapter) in offices in the study area.

(h) In study areas in which the telephone company has not implemented density zone pricing, telephone companies may offer term and volume discounts in entrance facilities charges when interconnectors have taken at least 100 DS1-equivalent cross-connects for the transmission of switched traffic (as described in § 69.121(a)(1) of this chapter) in offices in the study area.

[57 FR 54720, Nov. 20, 1992, as amended at 58 FR 41190 and 41191, Aug. 3, 1993; 58 FR 44950, Aug. 25, 1993; 58 FR 48763, Sept. 17, 1993; 59 FR 10304, Mar. 4, 1994; 60 FR 50121, Sept. 28, 1995; 64 FR 51267, Sept. 22, 1999]

### § 69.111 Tandem-switched transport and tandem charge.

(a)(1) Through June 30, 1998, except as provided in paragraph (l) of this section, tandem-switched transport shall consist of two rate elements, a transmission charge and a tandem switching charge.

(2) Beginning July 1, 1998, except as provided in paragraph (l) of this section, tandem-switched transport shall consist of three rate elements as follows:

(i) A per-minute charge for transport of traffic over common transport facilities between the incumbent local exchange carrier's end office and the tandem switching office. This charge shall be expressed in dollars and cents per access minute of use and shall be assessed upon all purchasers of common transport facilities between the local exchange carrier's end office and the tandem switching office.

(ii) A per-minute tandem switching charge. This tandem switching charge shall be set in accordance with paragraph (g) of this section, excluding multiplexer and dedicated port costs recovered in accordance with paragraph (l) of this section, and shall be assessed upon all interexchange carriers and other persons that use incumbent local exchange carrier tandem switching facilities.

(iii) A flat-rated charge for transport of traffic over dedicated transport facilities between the serving wire center and the tandem switching office. This charge shall be assessed as a charge for dedicated transport facilities provisioned between the serving wire center and the tandem switching office in accordance with § 69.112.

(b) [Reserved]

(c)(1) Until June 30, 1998:

(i) Except in study areas where the incumbent local exchange carrier has implemented density pricing zones as described in section 69.123, per-minute common transport charges described in paragraph (a)(1) of this section shall be presumed reasonable if the incumbent local exchange carrier bases the charges on a weighted per-minute equivalent of direct-trunked transport DS1 and DS3 rates that reflects the relative number of DS1 and DS3 circuits used in the tandem to end office links (or a surrogate based on the proportion of copper and fiber facilities in the interoffice network), calculated using the total actual voice-grade minutes of use, geographically averaged on a study-area-wide basis, that the incumbent local exchange carrier experiences based on the prior year's annual use. Tandem-switched transport transmission charges that are not presumed

reasonable shall be suspended and investigated absent a substantial cause showing by the incumbent local exchange carrier.

(ii) In study areas where the incumbent local exchange carrier has implemented density pricing zones as described in section 69.123, per-minute common transport charges described in paragraph (a)(1) of this section shall be presumed reasonable if the incumbent local exchange carrier bases the charges on a weighted per-minute equivalent of direct-trunked transport DS1 and DS3 rates that reflects the relative number of DS1 and DS3 circuits used in the tandem to end office links (or a surrogate based on the proportion of copper and fiber facilities in the interoffice network), calculated using the total actual voice-grade minutes of use, averaged on a zone-wide basis, that the incumbent local exchange carrier experiences based on the prior year's annual use. Tandem-switched transport transmission charges that are not presumed reasonable shall be suspended and investigated absent a substantial cause showing by the incumbent local exchange carrier.

(2) Beginning July 1, 1998:

(i) Except in study areas where the incumbent local exchange carrier has implemented density pricing zones as described in section 69.123, per-minute common transport charges described in paragraph (a)(2)(i) of this section shall be presumed reasonable if the incumbent local exchange carrier bases the charges on a weighted per-minute equivalent of direct-trunked transport DS1 and DS3 rates that reflects the relative number of DS1 and DS3 circuits used in the tandem to end office links (or a surrogate based on the proportion of copper and fiber facilities in the interoffice network), calculated using the total actual voice-grade minutes of use, geographically averaged on a study-area-wide basis, that the incumbent local exchange carrier experiences based on the prior year's annual use. Tandem-switched transport transmission charges that are not presumed reasonable shall be suspended and investigated absent a substantial cause showing by the incumbent local exchange carrier.

(ii) In study areas where the incumbent local exchange carrier has implemented density pricing zones as described in section 69.123, per-minute common transport charges described in paragraph (a)(2)(i) of this section shall be presumed reasonable if the incumbent local exchange carrier bases the charges on a weighted per-minute equivalent of direct-trunked transport DS1 and DS3 rates that reflects the relative number of DS1 and DS3 circuits used in the tandem to end office links (or a surrogate based on the proportion of copper and fiber facilities in the interoffice network), calculated using the total actual voice-grade minutes of use, averaged on a zone-wide basis, that the incumbent local exchange carrier experiences based on the prior year's annual use. Tandem-switched transport transmission charges that are not presumed reasonable shall be suspended and investigated absent a substantial cause showing by the incumbent local exchange carrier.

(d)(1) Through June 30, 1998, the tandem-switched transport transmission charges may be distance-sensitive. Distance shall be measured as airline distance between the serving wire center and the end office, unless the customer has ordered tandem-switched transport between the tandem office and the end office, in which case distance shall be measured as airline distance between the tandem office and the end office.

(2) Beginning July 1, 1998, the per-minute charge for transport of traffic over common transport facilities described in paragraph (a)(2)(i) of this section may be distance-sensitive. Distance shall be measured as airline distance between the tandem switching office and the end office.

(e)(1) Through June 30, 1998, if the telephone company employs distance-sensitive rates:

(i) A distance-sensitive component shall be assessed for use of the transmission facilities, including intermediate transmission circuit equipment between the end points of the interoffice circuit; and

(ii) A non-distance-sensitive component shall be assessed for use of the circuit equipment at the ends of the interoffice transmission links.

(2) Beginning July 1, 1998, if the telephone company employs distance-sensitive rates for transport of traffic over common transport facilities, as described in paragraph (a)(2)(i) of this section:

(i) A distance-sensitive component shall be assessed for use of the common transport facilities, including intermediate transmission circuit equipment between the end office and tandem switching office; and

(ii) A non-distance-sensitive component shall be assessed for use of the circuit equipment at the ends of the interoffice transmission links.

(f) [Reserved]

(g)(1) The tandem switching charge imposed pursuant to paragraphs (a)(1) or (a)(2)(ii) of this section, as applicable, shall be set to recover twenty percent of the annual part 69 interstate tandem revenue requirement plus one third of the portion of the tandem switching revenue requirement being recovered through the interconnection charge recovered by §§69.124, 69.153, and 69.155, excluding multiplexer and dedicated port costs recovered in accordance with paragraph (l) of this section.

(2) Beginning January 1, 1999, the tandem switching charge imposed pursuant to paragraph (a)(2)(ii) of this section shall be set to recover the amount prescribed in paragraph (g)(1) of this section plus one half of the remaining portion of the tandem switching revenue requirement then being recovered through the interconnection charge recovered by §§69.124, 69.153, and 69.155, excluding multiplexer and dedicated port costs recovered in accordance with paragraph (l) of this section.

(3) Beginning January 1, 2000, the tandem switching charge imposed pursuant to paragraph (a)(2)(ii) of this section shall be set to recover the entire interstate tandem switching revenue requirement, including that portion formerly recovered through the interconnection charge recovered in §§69.124, 69.153, and 69.155, and excluding multiplexer and dedicated port costs recovered in accordance with paragraph (l) of this section.

(4) A local exchange carrier that is subject to price cap regulation as that term is defined in §61.3(x) of this chapter shall calculate its tandem switching revenue requirement as used in this paragraph by dividing the tandem switching revenue requirement that was included in the original interconnection charge by the original interconnection charge, and then multiplying this result by the annual revenues recovered through the interconnection charge, described in §69.124, as of June 30, 1997. A local exchange carrier that is subject to price cap regulation as that term is defined in §61.3(x) of this chapter shall then make downward exogenous adjustments to the service band index for the interconnection charge service category (defined in §61.42(e)(2)(vi) of this chapter) and corresponding upward adjustments to the service band index for the tandem-switched transport service category (defined in §61.42(e)(2)(v) of this chapter) at the times and in the amounts prescribed in paragraphs (g)(1) through (g)(3) of this section .

(h) All telephone companies shall provide tandem-switched transport service.

(i) Except in the situations set forth in paragraphs (j) and (k) of this section, telephone companies may offer term and volume discounts in tandem-switched transport charges within each study area used for the purpose of jurisdictional separations, in which interconnectors have taken either:

(1) At least 100 DS1-equivalent cross-connects for the transmission of switched traffic (as described in §69.121(a)(1) of this chapter) in offices in the study area that the telephone company has assigned to the lowest priced density pricing zone (zone 1) under an approved density pricing zone plan as described in §§61.38(b)(4) and 61.49(k) of this chapter; or

(2) An average of at least 25 DS1-equivalent cross-connects for the transmission of switched traffic per office assigned to the lowest priced density pricing zone (zone 1).

(j) In study areas in which the telephone company has implemented density zone pricing, but no offices have been assigned to the lowest priced density pricing zone (zone 1), telephone companies may offer term and volume discounts in tandem-switched transport charges within the study area when interconnectors have taken at

least 5 DS1-equivalent cross-connects for the transmission of switched traffic (as described in §69.121(a)(1) of this chapter) in offices in the study area.

(k) In study areas in which the telephone company has not implemented density zone pricing, telephone companies may offer term and volume discounts in tandem-switched transport charges when interconnectors have taken at least 100 DS1-equivalent cross-connects for the transmission of switched traffic (as described in §69.121(a)(1) of this chapter) in offices in the study area.

(l) In addition to the charges described in this section, price cap local exchange carriers shall establish separate charges for multiplexers and dedicated trunk ports used in conjunction with the tandem switch as follows:

(1) Local exchange carriers must establish a traffic-sensitive charge for DS3/DS1 multiplexers used on the end office side of the tandem switch, assessed on purchasers of common transport to the tandem switch. This charge must be expressed in dollars and cents per access minute of use. The maximum charge shall be calculated by dividing the total costs of the multiplexers on the end office-side of the tandem switch by the annual access minutes of use calculated for purposes of recovery of common transport costs in paragraph (c) of this section. A similar charge shall be assessed for DS1/voice-grade multiplexing provided on the end-office side of analog tandem switches.

(2)(i) Local exchange carriers must establish a flat-rated charge for dedicated DS3/DS1 multiplexing on the serving wire center side of the tandem switch provided in conjunction with dedicated DS3 transport service from the serving wire center to the tandem switch. This charge shall be assessed on interexchange carriers purchasing tandem-switched transport in proportion to the number of DS3 trunks provisioned for that interexchange carrier between the serving wire center and the tandem-switch.

(ii) Local exchange carriers must establish a flat-rated charge for dedicated DS1/voice-grade multiplexing provided on the serving wire center side of analog tandem switches. This charge may be assessed on interexchange carriers purchasing tandem-switched transport in proportion to the interexchange carrier's transport capacity on the serving wire center side of the tandem.

(3) Price cap local exchange carriers may recover the costs of dedicated trunk ports on the serving wire center side of the tandem switch only through flat-rated charges expressed in dollars and cents per trunk port and assessed upon the purchaser of the dedicated trunk terminating at the port.

[57 FR 54720, Nov. 20, 1992, as amended at 58 FR 41190, Aug. 3, 1993; 58 FR 48764, Sept. 17, 1993; 60 FR 50121, Sept. 28, 1995; 62 FR 31933, June 11, 1997; 62 FR 40463, July 29, 1997; 62 FR 56132, Oct. 29, 1997; 64 FR 46594, Aug. 26, 1999]

### §69.112 Direct-trunked transport.

(a) A flat-rated direct-trunked transport charge expressed in dollars and cents per unit of capacity shall be assessed upon all interexchange carriers and other persons that use telephone company direct-trunked transport facilities.

(b)(1) For telephone companies subject to price cap regulation, initial direct-trunked transport charges based on the interoffice charges for equivalent voice grade, DS1, and DS3 special access services as of September 1, 1992, adjusted for changes in the price cap index calculated for the July 1, 1993 annual filing for telephone companies subject to price cap regulation, generally shall be presumed reasonable if the benchmark defined in §69.108 is satisfied. Direct-trunked transport charges may be distance-sensitive. Distance shall be measured as airline kilometers between customer-designated points.

(2) For telephone companies not subject to price cap regulation, initial direct-trunked transport charges based on the interoffice charges for equivalent voice grade, DS1, and DS3 special access services generally shall be presumed reasonable if the benchmark defined in §69.108 is satisfied. Direct-trunked transport charges may be distance-sensitive. Distance shall be measured as airline kilometers between customer-designated points.

(c) If the telephone company employs distance-sensitive rates:

(1) A distance-sensitive component shall be assessed for use of the transmission facilities, including intermediate transmission circuit equipment, between the end points of the circuit; and

(2) A nondistance-sensitive component shall be assessed for use of the circuit equipment at the ends of the transmission links.

(d) Telephone companies shall apply only their shortest term special access rates in setting direct-trunked transport rates.

(e) Except as provided in pagagraphs (f), (g), and (h) of this section, telephone companies shall not offer direct-trunked transport rates based on term discounts or volume discounts for multiple DS3s or any other service with higher volume than DS3.

(f) Except in the situations set forth in paragraphs (g) and (h) of this section, telephone companies may offer term and volume discounts in direct-trunked transport charges within each study area used for the purpose of jurisdictional separations, in which interconnectors have taken either:

(1) At least 100 DS1-equivalent cross-connects for the transmission of switched traffic (as described in § 69.121(a)(1)) in offices in the study area that the telephone company has assigned to the lowest priced density pricing zone (zone 1) under an approved density pricing zone plan as described in §§ 61.38(b)(4) and 61.49(k) of this section; or

(2) An average of at least 25 DS1-equivalent cross-connects for the transmission of switched traffic per office assigned to the lowest priced density pricing zone (zone 1).

(g) In study areas in which the telephone company has implemented density zone pricing, but no offices have been assigned to the lowest priced density pricing zone (zone 1), telephone companies may offer term and volume discounts in direct-trunked transport charges within the study area when interconnectors have taken at least 5 DS1-equivalent cross-connects for the transmission of switched traffic (as described in § 69.121(a)(1) of this chapter) in offices in the study area.

(h) In study areas in which the telephone company has not implemented density zone pricing, telephone companies may offer term and volume discounts in direct-trunked transport charges when interconnectors have taken at least 100 DS1-equivalent cross-connects for the transmission of switched traffic (as described in § 69.121(a)(1) of this chapter) in offices in the study area.

(i) Centralized equal access providers as described in Transport Rate Structure and Pricing, CC Docket No. 91–213, FCC 92–442, 7 FCC Rcd 7002 (1992), are not required to provide direct-trunked transport service. Telephone companies that do not have measurement and billing capabilities at their end offices are not required to provide direct-trunked transport services at those end offices without measurement and billing capabilities. Telephone companies that are not classified as Class A companies under § 32.11 of this chapter are required to provide direct-trunked transport service upon request. All other telephone companies shall provide a direct-trunked transport service.

[57 FR 54720, Nov. 20, 1992, as amended at 58 FR 41190, Aug. 3, 1993; 58 FR 44950, Aug. 25, 1993; 58 FR 48764, Sept. 17, 1993; 60 FR 50121, Sept. 28, 1995]

### § 69.113 Non-premium charges for MTS–WATS equivalent services.

(a) Charges that are computed in accordance with this section shall be assessed upon interexchange carriers or other persons that receive access that is not deemed to be premium access as this term in defined in § 69.105(b)(1) in lieu of carrier charges that are computed in accordance with §§ 69.105, 69.106, 69.118, 69.124, and 69.127.

(b) The non-premium charge for the Carrier Common Line element shall be computed by multiplying the premium charge for such element by .45.

(c) For telephone companies that are not subject to price cap regulation as that term is defined in § 61.3(x) of this chapter, the non-premium charge for the Local Switching element shall be computed by multiplying a hypothetical premium charge for such element by .45. The hypothetical premium charge for such element shall be computed by dividing the annual revenue requirement for each element by the sum of the projected access minutes for

such period and a number that is computed by multiplying the projected non-premium minutes for such element for such period by .45. For telephone companies that are price cap carriers, the non-premium charge for the Local Switching element shall be computed by multiplying the premium charge for such element by .45. Though June 30, 1993, the non-premium charge shall be computed by multiplying the LS2 charge for such element by .45.

(d) The non-premium charge or charges for the interconnection charge element shall be computed by multiplying the corresponding premium charge or charges by .45.

(e) The non-premium charge for any BSEs in local switching shall be computed by multiplying the premium charge for the corresponding BSEs by .45.

[54 FR 6293, Feb. 9, 1989, as amended at 55 FR 42386, Oct. 19, 1990; 55 FR 50559, Dec. 7, 1990; 56 FR 33881, July 24, 1991; 57 FR 54721, Nov. 20, 1992; 59 FR 10304, Mar. 4, 1994; 64 FR 46594, Aug. 26, 1999]

### § 69.114 Special access.

(a) Appropriate subelements shall be established for the use of equipment or facilities that are assigned to the Special Access element for purposes of apportioning net investment, or that are equivalent to such equipment or facilities for companies subject to price cap regulation as that term is defined in § 61.3(x) of this chapter.

(b) Charges for all subelements shall be designed to produce total annual revenue that is equal to the projected annual revenue requirement for the Special Access element.

(c) Charges for an individual element shall be assessed upon all interexchange carriers that use the equipment or facilities that are included within such subelement.

(d) Charges for individual subelements shall be designed to reflect cost differences among subelements in a manner that complies with applicable Commission rules or decisions.

[48 FR 10358, Mar. 11, 1983, as amended at 48 FR 43019, Sept. 21, 1983. Redesignated at 54 FR 6293, Feb. 9, 1989, as amended at 55 FR 42386, Oct. 19, 1990; 64 FR 46594, Aug. 26, 1999]

### § 69.115 Special access surcharges.

(a) Pending the development of techniques accurately to measure usage of exchange facilities that are interconnected by users with means of interstate or foreign telecommunications, a surcharge that is expressed in dollars and cents per line termination per month shall be assessed upon users that subscribe to private line services or WATS services that are not exempt from assessment pursuant to paragraph (e) of this section.

(b) Such surcharge shall be computed to reflect a reasonable approximation of the carrier usage charges which, assuming non-premium interconnection, would have been paid for average interstate or foreign usage of common lines, end office facilities, and transport facilities, attributable to each Special Access line termination which is not exempt from assessment pursuant to paragraph (e) of this section.

(c) If the association, carrier or carriers that file the tariff are unable to estimate such average usage for a period ending May 31, 1985, the surcharge for such period shall be twenty-five dollars ($25) per line termination per month. As of June 30, 2000, these rates will remain and be capped at the current levels until June 30, 2005.

(d) A telephone company may propose reasonable and nondiscriminatory end user surcharges, to be filed in its federal access tariffs and to be applied to the use of exchange facilities which are interconected by users with means of interstate or foreign telecommunication which are not provided by the telephone company, and which are not exempt from assessment pursuant to paragraph (e) of this section. Telephone companies which wish to avail themselves of this option must undertake to use reasonable efforts to identify such means of interstate or foreign telecommunication, and to assess end user surcharges in a reasonable and nondiscriminatory manner.

(e) No special access surcharges shall be assessed for any of the following terminations:

(1) The open end termination in a telephone company switch of an FX line, including CCSA and CCSA-equivalent ONALs;

(2) Any termination of an analog channel that is used for radio or television program transmission;

(3) Any termination of a line that is used for telex service;

(4) Any termination of a line that by nature of its operating characteristics could not make use of common lines; and

(5) Any termination of a line that is subject to carrier usage charges pursuant to § 69.5.

(6) Any termination of a line that the customer certifies to the exchange carrier is not connected to a PBX or other device capable of interconnecting a local exchange subscriber line with the private line or WATS access line.

(47 U.S.C. 154 (i) and (j), 201, 202, 203, 205, 218 and 403 and 5 U.S.C. 553)

[48 FR 43019, Sept. 21, 1983, as amended at 49 FR 7829, Mar. 2, 1984; 51 FR 10841, Mar. 31, 1986; 52 FR 8259, Mar. 17, 1987; 65 FR 38701, June 21, 2000]

### § 69.116 Universal service fund.

Effective August 1, 1988 through December 31, 1997:

(a) A charge that is expressed in dollars and cents per line per month shall be assessed upon all interexchange carriers that use local exchange switching facilities for the provision of interstate or foreign telecommunications services and that have at least .05 percent of the total common lines presubscribed to interexchange carriers in all study areas.

(b) The charge shall be computed by the association on a semi-annual basis by dividing one-twelfth of the projected annual Universal Service Fund revenue requirement by the total number of common lines presubscribed to interexchange carriers defined in § 69.116(a). Beginning on April 1, 1989, the association shall bill and collect the charge, and disburse associated revenue, on a monthly basis pursuant to § 69.603(c).

(c) Telephone companies shall provide the association the data necessary to compute the charge. These data shall include the number of presubscribed common lines in each study area and the number of those lines associated with each interexchange carrier serving that study area. In a study area served by a single interexchange carrier, all common lines shall be considered as presubscribed to that interexchange carrier. Information concerning presubscribed common lines shall be filed with the association on June 30 and December 30 of each year, except for the first such submission, containing presubscribed common line data calculated as of December 31, 1987, which shall be filed on August 1, 1988. Presubscribed common line data filed on June 30 shall be calculated as of December 31 of the preceding year, and presubscribed common line data filed on December 30 shall be calculated as of June 30 of the same year.

[53 FR 28396, July 28, 1988, as amended at 54 FR 50624, Dec. 8, 1989; 62 FR 32962, June 17, 1997]

### § 69.117 Lifeline assistance.

Effective August 1, 1988 through December 31, 1997

(a) A charge that is expressed in dollars and cents per line per month shall be assessed upon all interexchange carriers that use local exchange switching facilities for the provision of interstate or foreign telecommunications services and that have at least .05 percent of the total common lines presubscribed to interexchange carriers in all study areas.

(b) The charge shall be computed by the association on a semi-annual basis by dividing the sum of one-twelfth of the projected annual Lifeline Assistance revenue requirement and one-twelfth of the projected annual revenue requirement calculated by all telephone companies pursuant to § 69.104(l) by the number of common lines presubscribed to interexchange carriers defined in § 69.117(a). Beginning on April 1, 1989, the association shall bill and collect the charge, and disburse associated revenue, on a monthly basis pursuant to § 69.603(d).

(c) Telephone companies shall provide to the association the data necessary to compute the charge. These data shall include the number of presubscribed common lines in each study area and the number of those lines associated with each interexchange carrier serving that study area. In a study area served by a single interexchange carrier, all common

lines shall be considered as presubscribed to that interexchange carrier. Information concerning presubscribed common lines shall be filed with the association on June 30 and December 30 of each year, except for the first such submission, containing presubscribed common line data calculated as of December 31, 1987, which shall be filed on August 1, 1988. Presubscribed common line data filed on June 30 shall be calculated as of December 31 of the preceding year, and presubscribed common line data filed on December 30 shall be calculated as of June 30 of the same year.

[53 FR 28396, July 28, 1988, as amended at 54 FR 50624, Dec. 8, 1989; 62 FR 32962, June 17, 1997]

### § 69.118 Traffic sensitive switched services.

Notwithstanding §§ 69.4(b), 69.106, 69.109, 69.110, 69.111, 69.112, and 69.124, telephone companies subject to the BOC ONA Order, 4 FCC Rcd 1 (1988) shall, and other telephone companies may, establish approved Basic Service Elements as provided in Amendments of part 69 of the Commission's rules relating to the Creation of Access Charge Subelements for Open Network Architecture, Report and Order, 6 FCC Rcd 4524 (1991) and 800 data base subelements, as provided in Provision of Access for 800 Service, 8 FCC Rcd , CC Docket 86–10, FCC 93–53 (1993). Moreover, all customers that use basic 800 database service shall be assessed a charge that is expressed in dollars and cents per query. Telephone companies shall take into account revenues from the relevant Basic Service Element or Elements and 800 Database Service Elements in computing rates for the Local Switching, Entrance Facilities, Tandem-Switched Transport, Direct-Trunked Transport, Interconnection Charge, and/or Information elements.

[58 FR 7868, Feb. 10, 1993]

### § 69.119 Basic service element expedited approval process.

The rules for filing comments and reply comments on requests for expedited approval of new basic service elements are those indicated in § 1.45 of the rules, except as specified otherwise.

[56 FR 33881, July 24, 1991]

### § 69.120 Line information database.

(a) A charge that is expressed in dollars and cents per query shall be assessed upon all carriers that access validation information from a local exchange carrier database to recover the costs of:

(1) The transmission facilities between the local exchange carrier's signalling transfer point and the database; and

(2) The signalling transfer point facilities dedicated to the termination of the transmission facilities connecting the database to the exchange carrier's signalling network.

(b) A charge that is expressed in dollars and cents per query shall be assessed upon all carriers that access validation information from a local exchange carrier line information database to recover the costs of the database.

[57 FR 24380, June 9, 1992]

### § 69.121 Connection charges for expanded interconnection.

(a) Appropriate connection charge subelements shall be established for the use of equipment and facilities that are associated with offerings of expanded interconnection for special access and switched transport services, as defined in part 64, subpart N of this chapter. To the extent that the same equipment and facilities are used to provide expanded interconnection for both special access and switched transport, the same connection charge subelements shall be used.

(1) A cross-connect subelement shall be established for charges associated with the cross-connect cable and associated facilities connecting the equipment owned by or dedicated to the use of the interconnector with the telephone company's equipment and facilities used to provide interstate special or switched access services. Charges for the cross-connect subelement shall not be deaveraged within a study area that is used for purposes of jurisdictional separations.

(2) Charges for subelements associated with physical collocation or virtual collocation, other than the subelement described in paragraph (a)(1) of this section and subelements recovering the cost of the virtual collocation equipment described in § 64.1401(e)(1) of this chapter, may reasonably differ in different central offices, notwithstanding § 69.3(e)(7).

(b) Connection charge subelements shall be computed based upon the costs associated with the equipment and facilities that are included in such subelements, including no more than a just and reasonable portion of the telephone company's overhead costs.

(c) Connection charge subelements shall be assessed upon all interconnectors that use the equipment or facilities that are included in such subelements.

[57 FR 54332, Nov. 18, 1992, as amended by 58 FR 48764, Sept. 17, 1993; 59 FR 38930, Aug. 1, 1994]

### § 69.123 Density pricing zones for special access and switched transport.

(a)(1) Incumbent local exchange carriers not subject to price cap regulation may establish a reasonable number of density pricing zones within each study area that is used for purposes of jurisdictional separations, in which at least one interconnector has taken the subelement of connection charges for expanded interconnection described in § 69.121(a)(1).

(2) Such a system of pricing zones shall be designed to reasonably reflect cost-related characteristics, such as the density of total interstate traffic in central offices located in the respective zones.

(3) Non-price cap incumbent local exchange carriers may establish only one set of density pricing zones within each study area, to be used for the pricing of both special and switched access pursuant to paragraphs (c) and (d) of this section.

(b)(1) Incumbent local exchange carriers subject to price cap regulation may establish any number of density zones within a study area that is used for purposes of jurisdictional separations, provided that each zone, except the highest-cost zone, accounts for at least 15 percent of that carrier's trunking basket revenues within that study area, calculated pursuant to the methodology set forth in § 69.725.

(2) Price cap incumbent local exchange carriers may establish only one set of density pricing zones within each study area, to be used for the pricing of all services within the trunking basket for which zone density pricing is permitted.

(3) An access service subelement for which zone density pricing is permitted shall be deemed to be offered in the zone that contains the telephone company location from which the service is provided.

(4) An access service subelement for which zone density pricing is permitted which is provided to a customer between telephone company locations shall be deemed to be offered in the highest priced zone that contains one of the locations between which the service is offered.

(c) Notwithstanding § 69.3(e)(7) of this chapter, in study areas in which at least one interconnector has taken a cross-connect, as described in § 69.121(a)(1) of this chapter, for the transmission of interstate special access traffic, telephone companies may charge rates for special access subelements of DS1, DS3, and such other special access services as the Commission may designate, that differ depending on the zone in which the service is offered, provided that the charges for any such service shall not be deaveraged within any such zone.

(1) A special access service subelement shall be deemed to be offered in the zone that contains the telephone company location from which the service is provided.

(2) A special access service subelement provided to a customer between telephone company locations shall be deemed to be offered in the highest priced zone that contains one of the locations between which the service is offered.

(d) Notwithstanding § 69.3(e)(7) of this chapter, in study areas in which at least one interconnector has taken a cross-connect, as described in § 69.121(a)(1) of this chapter, for the transmission of interstate switched traffic, or is using collocated facilities

to interconnect with telephone company interstate switched transport services, telephone companies may charge rates for subelements of direct-trunked transport, tandem-switched transport, entrance facilities, and dedicated signalling transport that differ depending on the zone in which the service is offered, provided that the charge for any such service shall not be deaveraged within any such zone. Telephone companies may not, however, charge rates for the interconnection charge that differ depending on the zone in which the service is offered.

(1) A switched transport service subelement shall be deemed to be offered in the zone that contains the telephone company location from which the service is provided.

(2) A switched transport service subelement provided to a customer between telephone company locations shall be deemed to be offered in the highest priced zone that contains either of the locations between which the service is offered.

(e)(1) Telephone companies not subject to price cap regulation may charge a rate for each service in the highest priced zone that exceeds the rate for the same service in the lowest priced zone by no more than fifteen percent of the rate for the service in the lowest priced zone during the period from the date that the zones are initially established through the following June 30. The difference between the rates for any such service in the highest priced zone and the lowest priced zone in a study area, measured as a percentage of the rate for the service in the lowest priced zone, may increase by no more than an additional fifteen percentage points in each succeeding year, measured from the rate differential in effect on the last day of the preceding tariff year.

(2) Notwithstanding §69.3(e)(7), incumbent local exchange carriers subject to price cap regulation may charge different rates for services in different zones pursuant to §61.47(f) of this chapter, provided that the charges for any such service are not deaveraged within any such zone.

(f)(1) An incumbent local exchange carrier that establishes density pricing zones under this section must reallocate additional amounts recovered under the interconnection charge prescribed in §69.124 of this subpart to facilities-based transport rates, to reflect the higher costs of serving lower density areas. Each incumbent local exchange carrier must reallocate costs from the interexchange charge each time it increases the ratio between the prices in its lowest-cost zone and any other zone in that study area.

(2) Any incumbent local exchange carrier that has already deaveraged its rates on January 1, 1998 must reallocate an amount equivalent to that described in paragraph (f)(1) of this section from the interconnection charge prescribed in §69.124 to its transport services.

(3) Price cap local exchange carriers shall reassign to direct-trunked transport and tandem-switched transport categories or subcategories interconnection charge amounts reallocated under paragraph (f)(1) or (f)(2) of this section in a manner that reflects the way density pricing zones are being implemented by the incumbent local exchange carrier.

[57 FR 54333, Nov. 18, 1992, as amended by 58 FR 48764, Sept. 17, 1993; 62 FR 31935, June 11, 1997; 64 FR 51267, Sept. 22, 1999]

### § 69.124 Interconnection charge.

(a) Local exchange carriers not subject to price cap regulation shall assess an interconnection charge expressed in dollars and cents per access minute upon all interexchange carriers and upon all other persons using the telephone company switched access network.

(b) If the use made of the local exchange carrier's switched access network includes the local switch, but not local transport, the interconnection charge assessed pursuant to paragraph (a) of this section shall be computed by subtracting entrance facilities, tandem-switched transport, direct-trunked transport, and dedicated signalling transport revenues, as well as any interconnection charge revenues that the local exchange carrier anticipates will be reassigned to other, facilities-based rate elements in the future, from the part 69 transport revenue requirement, and dividing by the total interstate local switching minutes.

(c) If the use made of the local exchange carrier's switched access network includes local transport, the interconnection charge to be assessed pursuant to paragraph (a) of this section shall be computed by dividing any interconnection charge revenues that the local exchange carrier anticipates will be reassigned to other, facilities-based rate elements in the future by the total interstate local transport minutes, and adding thereto the per minute amount calculated pursuant to paragraph (b) of this section.

[62 FR 66030, Dec. 17, 1997]

### § 69.125 Dedicated signalling transport.

(a) Dedicated signalling transport shall consist of two elements, a signalling link charge and a signalling transfer point (STP) port termination charge.

(b)(1) A flat-rated signalling link charge expressed in dollars and cents per unit of capacity shall be assessed upon all interexchange carriers and other persons that use facilities between an interexchange carrier or other person's common channel signalling network and a telephone company signalling transfer point or equivalent facilities offered by a telephone company. Signalling link charges may be distance-sensitive. Distance shall be measured as airline kilometers between the signalling point of interconnection of the interexchange carrier's or other person's common channel signalling network and the telephone company's signalling transfer point.

(2) Signalling link rates will generally be presumed reasonable if they are based on the interoffice charges for equivalent special access services. Telephone companies that have, before February 18, 1993, tariffed a signalling link service for signalling transport between the interexchange carrier's or other person's common channel signalling network and the telephone company's STP are permitted to use the rates that are in place.

(c) A flat-rated STP port termination charge expressed in dollars and cents per port shall be assessed upon all interexchange carriers and other persons that use dedicated signalling transport.

[57 FR 54721, Nov. 20, 1992, as amended at 58 FR 41191, Aug. 3, 1993; 58 FR 44950, Aug. 25, 1993; 62 FR 31935, June 11, 1997]

### § 69.126 Nonrecurring charges.

Incumbent local exchange carriers shall not assess any nonrecurring charges for service connection when an interexchange carrier converts trunks from tandem-switched transport to direct-trunked transport or when an interexchange carrier orders the disconnection of overprovisioned trunks, until six months after the effective date of the tariffs eliminating the unitary pricing option for tandem-switched transport.

[62 FR 31935, June 11, 1997]

### § 69.127 Transitional Equal Charge Rule.

The transport rate structure in effect August 1, 1991, shall be retained until the tariffs filed pursuant to the Report and Order in Transport Rate Structure and Pricing, CC Docket No. 91–213, FCC 92–442, 7 FCC Rcd 7006 (1992) become effective.

[57 FR 54722, Nov. 20, 1992]

### § 69.128 Billing name and address.

Appropriate subelements shall be established for the use of equipment or facilities that are associated with offerings of billing name and address.

[58 FR 36145, July 6, 1993]

### § 69.129 Signalling for tandem switching.

A charge that is expressed in dollars and cents shall be assessed upon the purchasing entity by a local telephone company for provision of signalling for tandem switching.

[59 FR 32930, June 27, 1994]

## Subpart C—Computation of Charges for Price Cap Local Exchange Carriers

SOURCE: 62 FR 31935, June 11, 1997, unless otherwise noted.

**§ 69.151 Applicability.**

This subpart shall apply only to telephone companies subject to the price cap regulations set forth in part 61 of this chapter.

**§ 69.152 End user common line for price cap local exchange carriers.**

(a) A charge that is expressed in dollars and cents per line per month shall be assessed upon end users that subscribe to local exchange telephone service or Centrex service to the extent they do not pay carrier common line charges. A charge that is expressed in dollars and cents per line per month shall be assessed upon providers of public telephones. Such charge shall be assessed for each line between the premises of an end user, or public telephone location, and a Class 5 office that is or may be used for local exchange service transmissions.

(b) [Reserved]

(c) The charge for each subscriber line associated with a public telephone shall be equal to the monthly charge computed in accordance with paragraph (k) of this section.

(d)(1) Beginning July 1, 2000, in a study area that does not have deaveraged End User Common Line Charges, the maximum monthly charge for each primary residential or single-line business local exchange service subscriber line shall be the lesser of:

(i) The Average Price Cap CMT Revenue per Line month as defined in § 61.3(d) of this chapter; or

(ii) The following:

(A) On July 1, 2000, $4.35.

(B) On July 1, 2001, $5.00.

(C) On July 1, 2002, $6.00.

(D) On July 1, 2003, $6.50.

(2) In the event that GDP-PI exceeds 6.5% or is less than 0%, the maximum monthly charge in paragraph (d)(1)(ii) of this section and the cap will be adjusted pursuant to § 61.45(b)(1)(iii) of this chapter.

(e)(1) Beginning July 1, 2000, in a study area that does not have deaveraged End User Common Line Charges, the maximum monthly charge for each non-primary residential local exchange service subscriber line shall be the lesser of:

(i) $7.00; or

(ii) The greater of:

(A) The rate as of June 30, 2000 less reductions needed to ensure over recovery of CMT Revenues does not occur; or

(B) The Average Price Cap CMT Revenue per Line month as defined in § 61.3(d) of this chapter.

(2) In the event that GDP-PI is greater than 6.5% or is less than 0%, the maximum monthly charge in paragraph (e)(1)(i) of this section and the cap will be adjusted pursuant to § 61.45(b)(1)(iii) of this chapter.

(3) Where the local exchange carrier provides a residential line to another carrier so that the other carrier may resell that residential line to a residence that already receives a primary residential line, the local exchange carrier may collect the non-primary residential charge described in paragraph (e) of this section from the other carrier.

(f) The charge for each primary residential local exchange service subscriber line shall be the same as the charge for each single-line business local exchange service subscriber line.

(g) A line shall be deemed to be a residential subscriber line if the subscriber pays a rate for such line that is described as a residential rate in the local exchange service tariff.

(h) Effective July 1, 1999, only one of the residential subscriber lines a price cap local exchange carrier provides to a location shall be deemed to be a primary residential line.

(1) Effective July 1, 1999, for purposes of § 69.152(h) of this chapter, ''residential subscriber line'' includes residential lines that a price cap local exchange carrier provides to a competitive local exchange carrier that resells the line and on which the price cap local exchange carrier may assess access charges.

(2) Effective July 1, 1999, if a customer subscribes to residential lines from a price cap local exchange carrier and at least one reseller of the price cap local exchange carrier's lines, the line sold by the price cap local exchange carrier shall be the primary line, except that if a resold price cap LEC line is already the primary line, the resold line will remain the primary line should a price cap local exchange carrier subsequently sell an additional line to that residence.

(i) A line shall be deemed to be a single-line business subscriber line if the subscriber pays a rate that is not described as a residential rate in the local exchange service tariff and does not obtain more than one such line from a particular telephone company.

(j) No charge shall be assessed for any WATS access line.

(k)(1) Beginning on July 1, 2000, for any study area that does not have deaveraged End User Common Line charges and in the absence of voluntary reductions, the maximum monthly End User Common Line Charge for multi-line business lines will be the lesser of:

(i) $9.20; or

(ii) The greater of:

(A) The rate as of June 30, 2000, less reductions needed to ensure over recovery of CMT Revenues does not occur; or

(B) The Average Price Cap CMT Revenue per Line month as defined in § 61.3(d) of this chapter.

NOTE TO PARAGRAPH (K)(1): Except when the local exchange carrier reduces the rate through voluntary reductions, the multi-line business End User Common Line charge will be frozen until the study area's multi-line business PICC and CCL charge are eliminated.

(2) In the event that GDP–PI is greater than 6.5% or is less than 0%, the maximum monthly charge in paragraph (k)(1)(i) of this section and the cap will be adjusted pursuant to § 61.45(b)(1)(iii) of this chapter.

(l)(1) Beginning January 1, 1998, local exchange carrier shall assess no more than one End User Common Line charge as calculated under the applicable method under paragraph (e) of this section for Basic Rate Interface integrated services digital network (ISDN) service.

(2) Local exchange carriers shall assess no more than five End User Common Line charges as calculated under paragraph (k) of this section for Primary Rate Interface ISDN service.

(m) In the event the local exchange carrier charges less than the maximum End User Common Line charge for any subscriber lines, the local exchange carrier may not recover the difference between the amount collected and the maximum from carrier common line charges or PICCs.

(n)—(p) [Reserved]

(q) *End User Common Line Charge De-Averaging.* Beginning on July 1, 2000, local exchange carriers may geographically deaverage End User Common Line charges subject to the following conditions:

(1) In order for a price cap local exchange carrier to be allowed to de-average End User Common Line charges within a study area, the price cap local exchange carrier must have state Commission approved geographically deaveraged rates for UNE loops within that study area. Except where a LEC geographically deaverages through voluntary reductions, before a price cap local exchange carrier may geographically deaverage its End User Common Line rates, its Originating and Terminating CCL and Multi-line Business PICC rates in that study area must equal $0.00.

(2) All geographic deaveraging of End User Common Line charges by customer class within a study area must be according to the state commission-approved UNE loop zone. Solely for the purposes of determining interstate subscriber line charges and the interstate access universal service support described in §§ 54.806 and 54.807 of this chapter, a price cap local exchange carrier may not have more than four geographic End User Common Line Charge/Universal Service zones absent a review by the Commission. Where a price cap local exchange carrier has more than four state-created UNE zones and the Commission has not approved use of additional zones, the price cap local exchange carrier will determine, at its discretion, which state-created UNE zones to consolidate so that it has no more than four zones for the purpose of determining interstate subscriber line charges and interstate access universal service support.

(3) Within a given zone, Multi-line Business End User Common Line rates cannot fall below Primary Residential and Single-Line Business or Non-Primary Residential End User Common Line charges. Non-Primary End User Common Line charges cannot fall below Primary Residential and Single-Line Business charges.

(4) For any given class of customer in any given zone, the Zone deaveraged End User Common Line Charge in that

zone must be greater than or equal to the Zone deaveraged End User Common Line charge in the zone with the next lower Zone Average Revenue Per Line.

(5) The sum of all revenues per month that would be generated from all deaveraged End User Common Line charges in all zones within a study area plus Interstate Access Universal Service Support per Line month (as defined in §54.807 of this chapter) for the applicable customer classes and zones receiving such support multiplied by corresponding base period lines, divided by the number of base period lines in that study area cannot exceed Average Price Cap CMT Revenue per Line month as defined in §61.3(d) of this chapter for that study area. In addition, the sum of revenues per month that would be generated from all deaveraged End User Common Line charges in all End User Common Line charge deaveraging zones within a study area plus revenues per month from all End User Common Line charge, multi-line business PICC and CCL charges from study areas within that study area that have not geographically deaveraged End User Common Line charges plus the sum of all Interstate Access Universal Service Support per Line month (as defined in §54.807 of this chapter) for the applicable customer classes and zones receiving such support, multiplied by the corresponding base period lines for the applicable customer classes and zones within the study area, divided by the number of total base period lines in the study area cannot exceed Average Price Cap CMT Revenue per Line month as defined in §61.3(d) of this chapter for the study area.

(6) *Maximum charge.* The maximum zone deaveraged End User Common Line Charge that may be charged in any zone is the applicable cap specified in §69.152(d)(1), §69.152(e)(1)(i) or §69.152 (k)(1)(i) Zone Average Revenue Per Line is the Average Price Cap CMT Revenue per Line month allocated to a particular state-defined zone used for deaveraging of UNE loop prices. The zone average revenue per line is computed pursuant to §61.3 (zz) of this chapter.

(7) *Minimum charge.* Except where a local exchange carrier chooses to lower the deaveraged End User Common Line charge through voluntary reductions, the minimum zone deaveraged End User Common Line charge in any zone in a study area is at least the Minimum End User Common Line charge. Minimum End User Common Line charge is Zone Average Revenue Per Line for the zone with the lowest Zone Average Revenue Per Line in that study area plus an amount per line calculated to recover the difference between Interstate Access Universal Service Support Per Line (as defined in §54.807 of this chapter) multiplied by base period lines for the applicable customer class and zones receiving such support and Study Area Above Benchmark Revenues, first from Zone 1 until the End User Common Line charges in Zone 1 equal the End User Common Line charges in Zone 2, and then from lines in Zones 1 and 2 equally until the End User Common Line charges in those Zones reach Zone 3 (with all End User Common Line charges subject to the applicable residential and multi-line business lines nominal caps).

(i) For the purposes of this part, ''Study Area Above Benchmark Revenues'' is the sum of all Zone Above Benchmark Revenues.

(ii) For the purposes of this part, ''Zone Above Benchmark Revenues'' is calculated as follows:

Zone Above Benchmark Revenues is the sum of Zone Above Benchmark Revenues for Residential and Single-line Business lines and Zone Above Benchmark Revenues for Multi-line Business lines. Zone Above Benchmark Revenues for Residential and Single-line Business lines is, within each zone, (Zone Average Revenue Per Line minus $7.00) multiplied by all eligible telecommunications carrier Base Period Residential and Single-line Business lines times 12. If negative, the Zone Above Benchmark Revenues for Residential and Single-line Business lines for the zone is zero. Zone Above Benchmark Revenues for Multi-line Business lines is, within each zone,

(Zone Average Revenue Per Line minus $9.20) multiplied by all eligible telecommunications carrier zone Base Period Multi-line Business lines times

12. If negative, the Zone Above Benchmark Revenues for Multi-line Business lines for the zone is zero.

(8) *Voluntary Reductions.* A ''Voluntary Reduction'' is one in which the local exchange carrier reduces prices other than through offset of net increases in End User Common Line charge revenues or Interstate Access Universal Service support received pursuant to §54.807 of this chapter, or through increases in other zone deaveraged End User Common Line charges.

[65 FR 38701, June 21, 2000; 65 FR 57744, Sept. 26, 2000]

### § 69.153 Presubscribed interexchange carrier charge (PICC).

(a) A charge expressed in dollars and cents per line may be assessed upon the Multi-line business subscriber's presubscribed interexchange carrier to recover revenues totaling Average Price Cap CMT Revenues per Line month times the number of base period lines less revenues recovered through the End User Common Line charge established under §69.152 and Interstate Access Universal Service Support Per Line (as defined in §54.807 of this chapter) multiplied by base period lines for the applicable customer class and zones receiving such support, up to a maximum of $4.31 per line per month. In the event the ceilings on the PICC prevent the PICC from recovering all the residual common line/marketing and residual interconnection charge revenues, the PICC shall recover all residual common line/marketing revenues before it recovers residual interconnection charge revenues.

(b) If an end-user customer does not have a presubscribed interexchange carrier, the local exchange carrier may collect the PICC directly from the end user.

(c) [Reserved]

(d) Local exchange carriers shall assess no more than five PICCs as calculated under paragraph (a) of this section for Primary Rate Interface ISDN service.

(e) The maximum monthly PICC for Centrex lines shall be one-ninth of the maximum charge determined under paragraph (a) of this section, except that if a Centrex customer has fewer than nine lines, the maximum monthly PICC for those lines shall be the maximum charge determined under paragraph (a) of this section divided by the customer's number of Centrex lines.

(f)—(h) [Reserved]

[65 FR 38703, June 21, 2000; 65 FR 57744, Sept. 26, 2000]

### § 69.154 Per-minute carrier common line charge.

(a) Local exchange carriers may recover a per-minute carrier common line charge from interexchange carriers, collected on originating access minutes and calculated using the weighting method set forth in paragraph (c) of this section. The maximum such charge shall be the lower of:

(1) The per-minute rate using base period demand that would recover the maximum allowable carrier common line revenue as defined in §61.46(d) of this chapter; or

(2) The sum of the local switching, carrier common line and interconnection charge charges assessed on originating minutes on December 31, 1997, minus the local switching charges assessed on originating minutes.

(b) To the extent that paragraph (a) of this section does not recover from interexchange carriers all permitted carrier common line revenue, the excess may be collected through a per-minute charge on terminating access calculated using the weighting method set forth in paragraph (c) of this section.

(c) For each Carrier Common Line access element tariff, the premium originating Carrier Common Line charge shall be set at a level that recovers revenues allowed under paragraphs (a) and (b) of this section. The non-premium charges shall be equal to .45 multiplied by the premium charges.

[62 FR 31935, June 11, 1997, as amended at 65 FR 38703, June 21, 2000]

### § 69.155 Per-minute residual interconnection charge.

(a) Local exchange carriers may recover a per-minute residual interconnection charge on originating access. The maximum such charge shall be the lower of:

(1) The per-minute rate that would recover the total annual residual interconnection charge revenues permitted less the portion of the residual interconnection charge allowed to be recovered under § 69.153; or

(2) The sum of the local switching, carrier common line and residual interconnection charges assessed on originating minutes on December 31, 1997, minus the local switching charges assessed on originating minutes, less the maximum amount allowed to be recovered under § 69.154(a).

(b) To the extent that paragraph (a) of this section prohibits a local exchange carrier from recovering all of the residual interconnection charge revenues permitted, the residual may be collected through a per-minute charge on terminating access.

(c)(1) No portion of the charge assessed pursuant to paragraphs (a) or (b) of this section that recovers revenues that the local exchange carrier anticipates will be reassigned to other, facilities-based rate elements, including the tandem-switching rate element described in § 69.111(g), the three-part tandem switched transport rate structure described in § 69.111(a)(2), and port and multiplexer charges described in § 69.111(l), shall be assessed upon minutes utilizing the local exchange carrier's local switching facilities, but not the local exchange carrier's transport service.

(2) If a local exchange carrier cannot recover its full residual interconnection charge revenues through the PICC mechanism established in § 69.153, and will consequently cover a portion of its residual interconnection charge revenues through per-minute charges assessed pursuant to paragraphs (a) and (b) of this section, then the local exchange carrier must allocate its residual interconnection charge revenues subject to the exemption established in paragraph (c)(1) of this section between the PICC and the per-minute residual interconnection charge in the same proportion as other residual interconnection charge revenues are allocated between these two recovery mechanisms.

[62 FR 31938, June 11, 1997; 62 FR 40460, July 29, 1997, as amended at 62 FR 56133, Oct. 29, 1997]

### § 69.156 Marketing expenses.

Effective July 1, 2000, the marketing expenses formerly allocated to the common line and traffic sensitive baskets, and the switched services within the trunking basket pursuant to § 32.6610 of this chapter and § 69.403 will now be recovered in the CMT basket created pursuant to § 61.42(d)(1) of this chapter. These marketing expenses will be recovered through the elements outlined in §§ 69.152, 69.153 and 69.154.

[65 FR 38703, June 21, 2000]

### § 69.157 Line port costs in excess of basic, analog service.

To the extent that the costs of ISDN line ports, and line ports associated with other services, exceed the costs of a line port used for basic, analog service, local exchange carriers may recover the difference through a separate monthly end-user charge. As of June 30, 2000, these rates will be capped until June 30, 2005.

[65 FR 38704, June 21, 2000; 65 FR 57744, Sept. 26, 2000]

### § 69.158 Universal service end user charges.

To the extent the company makes contributions to the Universal Service Support Mechanisms pursuant to §§ 54.706 and 54.709 of this chapter and the local exchange carrier seeks to recover some or all of the amount of such contribution, the local exchange carrier shall recover those contributions through a charge to end users other than Lifeline users. These contributions are not a part of any price cap baskets, and the charge to recover these contributions is not part of any other element established pursuant to part 69. Such a charge may be assessed on a per-line basis or as a percentage of interstate retail revenues, and at the option of the local exchange carrier it may be combined for billing purposes with other end user retail rate elements. A local exchange carrier opting to assess the Universal Service end-user rate element on a per-line basis may apply that charge using the ''equivalency'' relationships established for the multi-line business PICC for Primary Rate ISDN service, as per

§ 69.153(d), and for Centrex lines, as per § 69.153(e).

[65 FR 38704, June 21, 2000; 65 FR 57744, Sept. 26, 2000]

## Subpart D—Apportionment of Net Investment

SOURCE: 52 FR 37312, Oct. 6, 1987, unless otherwise noted.

### § 69.301 General.

(a) For purposes of computing annual revenue requirements for access elements net investment as defined in § 69.2 (z) shall be apportioned among the interexchange category, the billing and collection category and access elements as provided in this subpart. For purposes of this subpart, local transport includes five elements: entrance facilities, direct-trunked transport, tandem-switched transport, dedicated signaling transport, and the interconnection charge. Expenses shall be apportioned as provided in subpart E of this part.

(b) The End User Common Line and Carrier Common Line elements shall be combined for purposes of this subpart and subpart E of this part. Those elements shall be described collectively as the Common Line element. The Common Line element revenue requirement shall be segregated in accordance with subpart F of this part.

[52 FR 37312, Oct. 6, 1987, as amended at 57 FR 54722, Nov. 20, 1992]

### § 69.302 Net investment.

(a) Investment in Accounts 2001, 1220 and Class B Rural Telephone Bank Stock booked in Account 1402 shall be apportioned among the interexchange category, billing and collection category and appropriate access elements as provided in §§ 69.303 through 69.309.

(b) Investment in Accounts 2002, 2003 and to the extent such inclusions are allowed by this Commission, Account 2005 shall be apportioned on the basis of the total investment in Account 2001, Telecommunications Plant in Service.

[52 FR 37312, Oct. 6, 1987, as amended at 54 FR 3456, Jan. 24, 1989]

### § 69.303 Information origination/termination equipment (IOT).

Investment in all other IOT shall be apportioned between the Special Access and Common Line elements on the basis of the relative number of equivalent lines in use, as provided herein. Each interstate or foreign Special Access Line, excluding lines designated in § 69.115(e), shall be counted as one or more equivalent lines where channels are of higher than voice bandwidth, and the number of equivalent lines shall equal the number of voice capacity analog or digital channels to which the higher capacity is equivalent. Local exchange subscriber lines shall be multiplied by the interstate Subscriber Plant Factor to determine the number of equivalent local exchange subscriber lines.

[52 FR 37312, Oct. 6, 1987, as amended at 62 FR 31938, June 11, 1997]

### § 69.304 Subscriber line cable and wire facilities.

(a) Investment in local exchange subscriber lines shall be assigned to the Common Line element.

(b) Investment in interstate and foreign private lines and interstate WATS access lines shall be assigned to the Special access element.

[52 FR 37312, Oct. 6, 1987, as amended at 62 FR 31938, June 11, 1997]

### § 69.305 Carrier cable and wire facilities (C&WF).

(a) Carrier C&WF that is not used for ''origination'' or ''termination'' as defined in § 69.2(bb) and § 69.2(cc) shall be assigned to the interexchange category.

(b) Carrier C&WF, other than WATS access lines, not assigned pursuant to paragraph (a), (c), or (e) of this section that is used for interexchange services that use switching facilities for origination and termination that are also used for local exchange telephone service shall be apportioned to the local Transport elements.

(c) Carrier C&WF that is used to provide transmission between the local exchange carrier's signalling transfer point and the database shall be assigned to the Line Information Database sub-element at § 69.120(a).

(d) All Carrier C&WF that is not apportioned pursuant to paragraphs (a), (b), (c), and (e) of this section shall be assigned to the Special Access element.

(e) Carrier C&WF that is used to provide transmission between the local exchange carrier's signalling transfer point and the local switch shall be assigned to the local switching category.

[52 FR 37312, Oct. 6, 1987, as amended at 57 FR 24380, June 9, 1992; 58 FR 30995, May 28, 1993; 62 FR 31938, June 11, 1997]

### § 69.306 Central office equipment (COE).

(a) The Separations Manual categories shall be used for purposes of apportioning investment in such equipment except that any Central office equipment attributable to local transport shall be assigned to the Transport elements.

(b) COE Category 1 (Operator Systems Equipment) shall be apportioned among the interexchange category and the access elements as follows: Category 1 that is used for intercept services shall be assigned to the Local Switching element. Category 1 that is used for directory assistance shall be assigned to the Information element. Category 1 other than service observation boards that is not assigned to the Information element and is not used for intercept services shall be assigned to the interexchange category. Service observation boards shall be apportioned among the interexchange category, and the Information and Transport access elements based on the remaining combined investment in COE Category 1, Category 2 and Category 3.

(c) COE Category 2 (Tandem Switching Equipment) that is deemed to be exchange equipment for purposes of the Modification of Final Judgment in *United States* v. *Western Electric Co.* shall be assigned to the tandem switching charge subelement and the interconnection charge element. COE Category 2 which is associated with the signal transfer point function shall be assigned to the local switching category. COE Category 2 which is used to provide transmission facilities between the local exchange carrier's signalling transfer point and the database shall be assigned to the Line Information Database subelement at § 69.120(a). All other COE Category 2 shall be assigned to the interexchange category.

(d) COE Category 3 (Local Switching Equipment) shall be assigned to the Local Switching element except as provided in paragraph (a) of this section; and that, for telephone companies subject to price cap regulation set forth in part 61 of this chapter, line-side port costs shall be assigned to the Common Line rate element.

(e) COE Category 4 (Circuit Equipment) shall be apportioned among the interexchange category and the Common Line, Transport, and Special Access elements. COE Category 4 shall be apportioned in the same proportions as the associated Cable and Wireless Facilities; except that any DS1/voice-grade multiplexer investment associated with analog local switches and assigned to the local transport category by this section shall be reallocated to the local switching category.

[52 FR 37312, Oct. 6, 1987, as amended at 57 FR 54722, Nov. 20, 1992; 58 FR 30995, May 28, 1993; 62 FR 31938, June 11, 1997]

### § 69.307 General support facilities.

(a) General purpose computer investment used in the provision of the Line Information Database sub-element at § 69.120(b) shall be assigned to that subelement.

(b) General purpose computer investment used in the provision of the billing name and address element at § 69.128 shall be assigned to that element.

(c) For all local exchange carriers not subject to price cap regulation and for other carriers that acquire all of the billing and collection services that they provide to interexchange carriers from unregulated affiliates through affiliate transactions, from unaffiliated third parties, or from both of these sources, all other General Support Facilities investments shall be apportioned among the interexchange category, the billing and collection category, and Common Line, Local Switching, Information, Transport, and Special Access elements on the basis of Central Office Equipment, Information Origination/Termination Equipment, and Cable and Wire Facilities, combined.

(d) For local exchange carriers subject to price cap regulation and not covered by Section 69.307(c), a portion of General purpose computer investment (Account 2124), investment in Land (Account 2111), Buildings (Account 2121), and Office equipment (Account 2123) shall be apportioned to the billing and collection category on the basis of the Big Three Expense Factors allocator, defined in Section 69.2 of this Part, modified to exclude expenses that are apportioned on the basis of allocators that include General Support Facilities investment. The remaining portion of investment in these four accounts together with all other General Support Facilities investments shall be apportioned among the interexchange category, the billing and collection category, and Common Line, Local Switching, Information, Transport, and Special Access Elements on the basis of Central Office Equipment, Information Origination/Termination Equipment, and Cable and Wire Facilities, combined.

[58 FR 30995, May 28, 1993, as amended at 58 FR 36145, July 6, 1993; 62 FR 31939, June 11, 1997; 62 FR 40464, July 29, 1997; 62 FR 65622, Dec. 15, 1997 ]

### § 69.308 [Reserved]

### § 69.309 Other investment.

Investment that is not apportioned pursuant to §§ 69.302 through 69.307 shall be apportioned among the interexchange category, the billing and collection category and access elements in the same proportions as the combined investment that is apportioned pursuant to §§ 69.303 through 69.307.

[62 FR 31939, June 11, 1997]

### § 69.310 Capital leases.

Capital Leases in Account 2680 shall be directly assigned to the appropriate interexchange category or access elements consistent with the treatment prescribed for similar plant costs or shall be apportioned in the same manner as Account 2001.

## Subpart E—Apportionment of Expenses

SOURCE: 52 FR 37313, Oct. 6, 1987, unless otherwise noted.

### § 69.401 Direct expenses.

(a) Plant Specific Operations Expenses in Accounts 6110 and 6120 shall be apportioned among the interexchange category, the billing and collection category and appropriate access elements on the following basis:

(1) Account 6110—Apportion on the basis of other investment apportioned pursuant to § 69.309.

(2) Account 6120—Apportion on the basis of General and Support Facilities investment pursuant to § 69.307.

(b) Plant Specific Operations Expenses in Accounts 6210, 6220, and 6230, shall be apportioned among the interexchange category and access elements on the basis of the apportionment of the investment in Accounts 2210, 2220, and 2230, respectively; provided that any expenses associated with DS1/voice-grade multiplexers, to the extent that they are not associated with an analog tandem switch, assigned to the local transport category by this paragraph shall be reallocated to the local switching category; provided further that any expenses associated with common channel signalling included in Account 6210 shall be assigned to the local transport category.

(c) Plant Specific Operations Expenses in Accounts 6310 and 6410 shall be assigned to the appropriate investment category and shall be apportioned among the interexchange category and access elements in the same proportions as the total associated investment.

(d) Plant Non Specific Operations Expenses in Accounts 6510 and 6530 shall be apportioned among the interchange category, the billing and collection category, and access elements in the same proportions as the combined investment in COE, IOT, and C&WF apportioned to each element and category.

(e) Plant Non Specific Operations Expenses in Account 6540 shall be assigned to the interexchange category.

(f) Plant Non Specific Operations Expenses in Account 6560 shall be apportioned among the interexchange category, the billing and collection category, and access elements in the same proportion as the associated investment.

(g) Amortization of embedded customer premises wiring investment shall be deemed to be associated with § 69.303(b) IOT investment for purposes of the apportionment described in paragraph (c) of this section.

[52 FR 37313, Oct. 6, 1987, as amended at 62 FR 31939, June 11, 1997]

### § 69.402 Operating taxes (Account 7200).

(a) Federal income taxes, state and local income taxes, and state and local gross receipts or gross earnings taxes that are collected in lieu of a corporate income tax shall be apportioned among the interexchange category, the billing and collection category and all access elements based on the approximate net taxable income on which the tax is levied (positive or negative) applicable to each element and category.

(b) All other operating taxes shall be apportioned among the interexchange category, the billing and collection category and all access elements in the same manner as the investment apportioned to each element and category pursuant to § 69.309 Other Investment.

### § 69.403 Marketing expense (Account 6610).

Marketing expense shall be apportioned among the interexchange category and all access elements in the same proportions as the combined investment that is apportioned pursuant to § 69.309.

### § 69.404 Telephone operator services expenses in Account 6620.

Telephone Operator Services expenses shall be apportioned among the interexchange category, and the Local Switching and Information elements based on the relative number of weighted standard work seconds. For those companies who contract with another company for the provision of these services, the expenses incurred shall be directly assigned among the interexchange category and the Local Switching and Information elements on the basis of the bill rendered for the services provided.

### § 69.405 Published directory expenses in Account 6620.

Published Directory expenses shall be assigned to the Information element.

### § 69.406 Local business office expenses in Account 6620.

(a) Local business office expenses shall be assigned as follows:

(1) End user service order processing expenses attributable to presubscription shall be apportioned among the Common Line, Switching, and Transport elements in the same proportion as the investment apportioned to those elements pursuant to § 69.309.

(2) End user service order processing, payment and collection, and billing inquiry expenses attributable to the company's own interstate private line and special access service shall be assigned to the Special Access element.

(3) End user service order processing, payment and collection, and billing inquiry expenses attributable to interstate private line service offered by an interexhange carrier shall be assigned to the billing and collection category.

(4) End user service order processing, payment and collection, and billing inquiry expenses attributable to the company's own interstate message toll service shall be assigned to the interexchange category. End user service order processing, payment and collection, and billing inquiry expenses attributable to interstate message toll service offered by an interexchange carrier shall be assigned to the billing and collection category. End user payment and collection and billing inquiry expenses attributable to End User Common Line access billing shall be assigned to the Common Line element.

(5) End user service order processing, payment and collection, and billing inquiry expenses attributable to TWX service shall be assigned to the Special Access element.

(6) Interexchange carrier service order processing, payment and collection, and billing inquiry expenses attributable to private lines and special access shall be assigned to the Special Access element.

(7) Interexchange carrier service order processing, payment and collection, and billing inquiry expenses attributable to interstate switched access and message toll, shall be apportioned among the Common Line, Local Switching and Transport elements in the same proportion as the investment apportioned to those elements pursuant to § 69.309.

(8) Interexchange carrier service order processing, payment and collection, and billing inquiry expenses attributable to billing and collection service shall be assigned to the billing and collection category.

[52 FR 37313, Oct. 6, 1987, as amended at 62 FR 31939, June 11, 1997]

### § 69.407 Revenue accounting expenses in Account 6620.

(a) Revenue accounting expenses that are attributable to End User Common Line access billings shall be assigned to the Common Line element.

(b) Revenue Accounting Expenses that are attributable to carrier's carrier access billing and collecting expense shall be apportioned among all carrier's carrier access elements except the Common Line element. Such expenses shall be apportioned in the same proportion as the combined investment in COE, C&WF and IOT apportioned to those elements.

(c) Revenue Accounting Expenses allocated to the interstate jurisdiction that are attributable to the provision of billing name and address information shall be assigned to the Billing Name and Address element.

(d) All other Revenue Accounting Expenses shall be assigned to the billing and collection category.

[52 FR 37313, Oct. 6, 1987, as amended at 58 FR 65671, Dec. 16, 1993]

### § 69.408 All other customer services expenses in Account 6620.

All other customer services expenses shall be apportioned among the Interexchange category, the billing and collection category and all access elements based on the combined expenses in §§ 69.404 through 69.407.

[52 FR 37313, Oct. 6, 1987, as amended at 54 FR 3456, Jan. 24, 1989]

### § 69.409 Corporate operations expenses (Accounts 6710 and 6720).

All corporate operations expenses shall be apportioned among the interexchange category, the billing and collection category and all access elements in accordance with the Big 3 Expense Factor as defined in § 69.2(f).

### § 69.411 Other expenses.

Except as provided in §§ 69.412, 69.413, and 69.414, expenses that are not apportioned pursuant to §§ 69.401 through 69.409 shall be apportioned among the interexchange category and all access elements in the same manner as § 69.309 Other investment.

[62 FR 31639, June 11, 1997]

### § 69.412 Non participating company payments/receipts.

For telephone companies that are not association Common Line tariff participants, the payment or receipt of funds described in § 69.612(a) and (b) shall be apportioned, respectively, as an addition to or a deduction from their common line revenue requirement.

### § 69.413 Universal service fund expenses.

Expenses allocated to the interstate jurisdiction pursuant to §§ 36.631 and 36.641 shall be assigned to the Carrier Common Line Element until March 31, 1989. Beginning April 1, 1989, such expenses shall be assigned to the Universal Service Fund Element.

### § 69.414 Lifeline assistance expenses.

Expenses allocated to the interstate jurisdiction pursuant to § 36.741 shall be assigned to the Carrier Common Line element until March 31, 1989. Beginning April 1, 1989, such expenses shall be assigned to the Lifeline Assistance element.

## Subpart F—Segregation of Common Line Element Revenue Requirement

### § 69.501 General.

(a) [Reserved]

(b) Any portion of the Common Line element annual revenue requirement that is attributable to CPE investment or expense or surrogate CPE investment or expense shall be assigned to the Carrier Common Line element or elements.

(c) Any portion of the Common Line element annual revenue requirement that is attributable to customer premises wiring included in IOT investment or expense shall be assigned to the Carrier Common Line element or elements.

(d) [Reserved]

(e) Any portion of the Common Line element revenue requirement that is not assigned to Carrier Common Line elements pursuant to paragraphs (a), (b), and (c) of this section shall be apportioned between End User Common Line and Carrier Common Line pursuant to § 69.502. Such portion of the Common Line element annual revenue requirement shall be described as the base factor portion for purposes of this subpart.

[48 FR 10358, Mar. 11, 1983, as amended at 50 FR 18262, Apr. 30, 1985; 52 FR 21542, June 8, 1987; 52 FR 37314, Oct. 6, 1987; 61 FR 65364, Dec. 12, 1996; 62 FR 31939, June 11, 1997]

### § 69.502 Base factor allocation.

Projected revenues from the following shall be deducted from the base factor portion to determine the amount that is assigned to the Carrier Common Line element:

(a) End User Common Line charges, less any marketing expense revenues recovered through end user common line charges pursuant to § 69.156;

(b) Special Access surcharges; and

(c) The portion of per-line support that carriers receive pursuant to § 54.303.

[62 FR 31939, June 11, 1997, as amended at 62 FR 40464, July 29, 1997]

## Subpart G—Exchange Carrier Association

### § 69.601 Exchange carrier association.

(a) An association shall be established in order to prepare and file access charge tariffs on behalf of all telephone companies that do not file separate tariffs or concur in a joint access tariff of another telephone company for all access elements.

(b) All telephone companies that participate in the distribution of Carrier Common Line revenue requirement, pay long term support to association Common Line tariff participants, or receive payments from the transitional support fund administered by the association shall be deemed to be members of the association.

(c) All data submissions to the association required by this title shall be accompanied by the following certification statement signed by the officer or employee responsible for the overall preparation for the data submission:

CERTIFICATION

I am (title of certifying officer or employee). I hereby certify that I have overall responsibility for the preparation of all data in the attached data submission for (name of carrier) and that I am authorized to execute this certification. Based on information known to me or provided to me by employees responsible for the preparation of the data in this submission, I hereby certify that the data have been examined and reviewed and are complete, accurate, and consistent with the rules of the Federal Communications Commission.

Date:

Name:

Title:

(Persons making willful false statements in this data submission can be punished by fine or imprisonment under the provisions of the U.S. Code, Title 18, Section 1001).

[48 FR 10358, Mar. 11, 1983, as amended at 52 FR 21542, June 8, 1987; 60 FR 19530, Apr. 19, 1995]

### § 69.602 Board of directors.

(a) For purposes of this section, the association membership shall be divided into three subsets:

(1) The first subset shall consist of the telephone companies owned and operated by the seven Regional Bell Holding Companies;

(2) The second subset shall consist of all other telephone companies with annual operating revenues in excess of forty million dollars;

(3) The third subset shall consist of all other telephone companies. All commonly controlled companies shall be deemed to be one company for purposes of this section.

(b) There shall be fifteen directors of the association.

(c) Until 1996, three directors shall represent the first subset, three directors shall represent the second subset, and nine directors shall represent the third subset. In 1996 and thereafter, two directors shall represent the first subset, two directors shall represent the second subset, six directors shall represent the third subset, and five directors shall represent all three subsets.

(d) No director who represents all three subsets shall be a current or former officer or employee of the association or of any association member, or have a business relationship or other interest that could interfere with his or her exercise of independent judgment.

(e) Each subset shall select the directors who will represent it individually through an annual election in which each member of the subset shall be entitled to vote for the number of directors that will represent such members' subset.

(f) The association membership shall select the directors for the following calendar year who will represent all three subsets through an annual election in which each member of the association shall be entitled to one vote for each director position. There shall be at least two candidates meeting the qualifications in paragraph (d) of this section for each such director position:

(1) In any election in which the most recently elected director for such position is not a qualified candidate;

(2) If there has been no election for such position having more than one qualified candidate during the present and the two preceding calendar years; and

(3) In any election for which the ballot lists two or more qualified candidates.

(g) At least one director representing all three subsets shall be a member of each committee of association directors.

(h) For each access element or group of access elements for which voluntary pooling is permitted, there shall be a committee that is responsible for the preparation of charges for the associated access elements that comply with all applicable sections in this part.

(i) Directors shall serve for a term of one year commencing January 1 and concluding on December 31 of each year.

[60 FR 19530, Apr. 19, 1995]

### § 69.603 Association functions.

(a) The Association shall not engage in any activity that is not related to the preparation of access charge tariffs or the collection and distribution of access charge revenues or the operation of a billing and collection pool on an untariffed basis unless such activity is expressly authorized by order of the Commission.

(b) Participation in Commission or court proceedings relating to access charge tariffs, the billing and collection of access charges, the distribution of access charge revenues, or the operation of a billing and collection pool on an untariffed basis shall be deemed to be authorized association activities.

(c)–(e) [Reserved]

(f) The association shall also prepare and file an access charge tariff containing terms and conditions for access service and form for the filing of rate schedules by telephone companies that choose to reference these terms and conditions while filing their own access rates.

(g) The association shall divide the expenses of its operations into two categories. The first category (''Category I Expenses'') shall consist of those expenses that are associated with the preparation, defense, and modification of association tariffs, those expenses that are associated with the administration of pooled receipts and distributions of exchange carrier revenues resulting from association tariffs, those expenses that are associated with association functions pursuant to § 69.603 (c)–(g), and those expenses that pertain to Commission proceedings involving subpart G of part 69 of the Commission's rules. The second category

(''Category II Expenses'') shall consist of all other association expenses. Category I Expenses shall be sub-divided into three components in proportion to the revenues associated with each component. The first component (''Category I.A Expenses'') shall be in proportion to the Universal Service Fund and Lifeline Assistance revenues. The second component (''Category I.B Expenses'') shall be in proportion to the sum of the association End User Common Line revenues, the association Carrier Common Line revenues, the association Special Access Surcharge revenues, the Long Term Support payments and the Transitional Support payments. The third component (''Category I.C Expenses'') shall be in proportion to the revenues from all other association interstate access charges.

(h)(1) The revenue requirement for association tariffs filed pursuant to § 69.4(c) shall not include any association expenses other than Category I.A Expenses.

(2) The revenue requirement for association tariffs filed pursuant to § 69.4 (a) and (b)(2) shall not include any Association expenses other than Category I.B Expenses.

(3) The revenue requirement for association tariffs filed pursuant to § 69.4(b) (1) and (3)–(7) shall not include any association expenses other than Category I.C Expenses.

(4) No distribution to an exchange carrier of Universal Service Fund and Lifeline Assistance revenues shall include adjustments for association expenses other than Category I.A Expenses.

(5) No distribution to an exchange carrier of revenues from association End User Common Line or Carrier Common Line charges, Special Access Surcharges or Long Term Support or Transitional Support payments shall include adjustments for association expenses other than Category I.B Expenses.

(6) No distribution to an exchange carrier of revenues from association interstate access charges other than End User Common Line and Carrier Common Line charges and Special Access Surcharges shall include adjustments for association expenses other than Category I.C Expenses.

(7) The association shall separately identify all Category I.A, I.B and I.C expenses in cost support materials filed with each annual association access tariff filing.

[54 FR 8197, Feb. 27, 1989, as amended at 54 FR 8199, Feb. 27, 1989; 62 FR 41306, Aug. 1, 1997; 63 FR 70578, Dec. 21, 1998]

### § 69.604 Billing and collection of access charges.

(a) Telephone companies shall bill and collect all access charges except those charges specified in §§ 69.116 and 69.117.

(b) All access charges shall be billed monthly.

[51 FR 9012, Mar. 17, 1986, as amended at 52 FR 21543, June 8, 1987]

### § 69.605 Reporting and distribution of pool access revenues.

(a) Access revenues and cost data shall be reported by participants in association tariffs to the association for computation of monthly pool revenues distributions in accordance with this subpart.

(b) Association expenses incurred during the month that are allowable access charge expenses shall be reimbursed before any other funds are disbursed.

(c) Except as provided in paragraph (b) of this section, payments to average schedule companies that are computed in accordance with § 69.606 shall be disbursed before any other funds are disbursed. For purposes of this part, a telephone company that was participating in average schedule settlements on December 1, 1982, shall be deemed to be an average schedule company except that any company that does not join in association tariffs for all access elements shall not be deemed to be an average schedule company.

(d) The residue shall be disbursed to telephone companies that are not average schedule companies in accordance with §§ 69.607 through 69.610.

(e) The association shall submit a report on or before February 1 of each calendar year describing the association's cost study review process for the preceding calendar year as well as the results of that process. For any revisions to cost study results made or recommended by the association that

would change the respective carrier's calculated annual common line or traffic sensitive revenue requirement by ten percent or more, the report shall include the following information:

(1) The name of the carrier;

(2) A detailed description of the revisions;

(3) The amount of the revisions;

(4) The impact of the revisions on the carrier's calculated common line and traffic sensitive revenue requirements; and

(5) The carrier's total annual common line and traffic sensitive revenue requirement.

[48 FR 10358, Mar. 11, 1983, as amended at 51 FR 17027, May 8, 1986; 52 FR 21543, June 8, 1987; 54 FR 11537, Mar. 21, 1989; 60 FR 19530, Apr. 19, 1995]

### § 69.606 Computation of average schedule company payments.

(a) Payments shall be made in accordance with a formula approved or modified by the Commission. Such formula shall be designed to produce disbursements to an average schedule company that simulate the disbursements that would be received pursuant to § 69.607 by a company that is representative of average schedule companies.

(b) The association shall submit a proposed revision of the formula for each annual period subsequent to December 31, 1986, or certify that a majority of the directors of the association believe that no revisions are warranted for such period on or before December 31 of the preceding year.

(47 U.S.C. 154 (i) and (j), 201, 202, 203, 205, 218 and 403 and 5 U.S.C. 553)

[48 FR 10358, Mar. 11, 1983, as amended at 50 FR 41356, Oct. 10, 1985; 55 FR 6990, Feb. 28, 1990]

### § 69.607 Disbursement of Carrier Common Line residue.

(a) The association shall compute a monthly net balance for each member telephone company that is not an average schedule company. If such a company has a negative net balance, the association shall bill that amount to such company. If such a company has a positive net balance, the association shall disburse that amount to such company.

(b) The net balance for such a company shall be computed by multiplying a hypothetical net balance for such a company by a factor that is computed by dividing the Carrier Common Line residue by the sum of the hypothetical net balances for such companies.

(c) The hypothetical net balance for each company shall be the sum of the hypothetical net balances for each access element. Such hypothetical net balances shall be computed in accordance with §§ 69.608 to 69.610.

[48 FR 10358, Mar. 11, 1983, as amended at 51 FR 42237, Nov. 24, 1986]

### § 69.608 Carrier Common Line hypothetical net balance.

The hypothetical net balance shall be equal to a Carrier Common Line revenue requirement for each such company that is computed in accordance with subpart F of this part.

### § 69.609 End User Common Line hypothetical net balances.

(a) If the company does not participate in the association tariff for such element, the hypothetical net balance shall be zero.

(b) If the company does participate in the association tariff for such element, the hypothetical net balance shall be computed by multiplying an amount that is computed by deducting access revenues collected by such company for such element from an End User Common Line revenue requirement for such company that is computed in accordance with subpart F of this part by a factor that is computed by dividing access revenues collected by all such companies for such element by an End User Common Line revenue requirement for all such companies that is computed in accordance with subpart F of this part.

### § 69.610 Other hypothetical net balances.

(a) The hypothetical net balance for an access element other than a Common Line element shall be computed as provided in this section.

(b) If the company does not participate in the association tariff for such element, the hypothetical net balance shall be zero.

(c) If the company does participate in the association tariff for such element, the hypothetical net balance shall be computed by deducting access revenues collected for such element from the sum of expense attributable to such element and the element residue apportioned to such company. The element residue shall be apportioned among such companies in the same proportions as the net investment attributable to such element.

(d) The element residue shall be computed by deducting expenses of all participating companies attributable to such element from revenues collected by all participating companies for such element.

[48 FR 10358, Mar. 11, 1983, as amended at 51 FR 42237, Nov. 24, 1986]

### §69.612 Long term and transitional support.

A telephone company that does not participate in the association Common Line tariff shall have computed by the association:

(a) *Long term support obligation.* (1) Beginning July 1, 1994 and until December 31, 1997, the Long Term Support payment obligation of telephone companies that do not participate in the NECA Common Line tariff shall equal the difference between the projected Carrier Common Line revenue requirement of association Common Line tariff participants and the projected revenue recovered by the association Carrier Common Line charge as calculated pursuant to §69.105(b)(1).

(2) For the period from April 1, 1989 through June 30, 1994, the Long Term Support payment obligation shall be funded by all telephone companies that are not association Common Line tariff participants and do not receive transitional support pursuant to §69.612(b). The percentage of the total annual Long Term Support requirement paid by each telephone company in this group that is not a Level I or Level II Contributor shall equal the number of its common lines divided by the total number of common lines of all telephone companies paying Long Term Support. The remaining amount of Long Term Support requirement shall be allocated among Level I and Level II Contributors based upon the amount of each Level I and Level II Contributor's 1988 contributions to the association Common Line pool in relation to the total amount of 1988 Common Line pool contributions of all other Level I and Level II Contributors. The association shall inform each telephone company about its mandatory Long Term Support obligations within a reasonable time prior to the filing of each telephone company's annual Common Line tariff revisions or other similar filing ordered by the Commission. Such amounts shall represent a negative net balance due to the association that it shall bill, collect, and distribute pursuant to §69.603(e).

(3) Beginning July 1, 1994, and thereafter, the Long Term Support payment obligation shall be funded by each telephone company that files its own Carrier Common Line tariff and does not receive transitional support. The percentage of the total annual Long Term Support requirement paid by each of these companies shall equal the number of its common lines divided by the total number of common lines of all telephone companies paying Long Term Support. The association shall inform each telephone company about its Long Term Support obligation within a reasonable time prior to the filing of each telephone company's annual Common Line tariff revisions or other similar filing ordered by the Commission. Such amounts shall represent a negative net balance due to the association that it shall bill, collect, and distribute pursuant to §69.603(f).

(b) *Transitional support.* (1) Telephone Companies categorized as Level I and Level II Receivers that file their own Common Line tariffs effective April 1, 1989 shall receive Transitional Support for a four year period commencing April 1, 1989. Level II Receivers that file their own Common Line tariffs effective July 1, 1990 shall receive Transitional Support for a four year period commencing July 1, 1990. Transitional Support for each of these telephone companies shall be computed on the basis of the net revenues less revenue requirement amounts for 1988 (adjusted for the additional revenues resulting from an increase in End User Common Line charges to $3.50). Transitional

Support for these telephone companies during the transition shall be as follows:

Year 1—80% of the adjusted 1988 frozen amount
Year 2—60% of the adjusted 1988 frozen amount
Year 3—40% of the adjusted 1988 frozen amount
Year 4—20% of the adjusted 1988 frozen amount

(2) For the period from April 1, 1989 through June 30, 1994, the Transitional Support Fund shall be funded by all telephone companies or groups of affiliated telephone companies that are not association Common Line tariff participants and do not qualify under § 69.612(b)(1) for Transitional Support payments.

[55 FR 6990, Feb. 28, 1990, as amended at 62 FR 32962, June 17, 1997; 63 FR 2133, Jan. 13, 1998]

## Subpart H—Pricing Flexibility

SOURCE: 64 FR 51267, Sept. 22, 1999, unless otherwise noted.

### § 69.701 Application of rules in this subpart.

The rules in this subpart apply to all incumbent LECs subject to price cap regulation, as defined in § 61.3(x) of this chapter, seeking pricing flexibility on the basis of the development of competition in parts of its service area.

### § 69.703 Definitions.

For purposes of this subpart:

(a) *Channel terminations.* (1) A channel termination between an IXC POP and a serving wire center is a dedicated channel connecting an IXC POP and a serving wire center, offered for purposes of carrying special access traffic.

(2) A channel termination between a LEC end office and a customer premises is a dedicated channel connecting a LEC end office and a customer premises, offered for purposes of carrying special access traffic.

(b) *Metropolitan Statistical Area (MSA).* This term shall have the definition provided in § 22.909(a) of this chapter.

(c) *Interexchange Carrier Point of Presence (IXC POP).* The point of interconnection between an interexchange carrier's network and a local exchange carrier's network.

(d) *Wire center.* For purposes of this subpart, the term ''wire center'' shall refer to any location at which an incumbent LEC is required to provide expanded interconnection for special access pursuant to § 64.1401(a) of this chapter, and any location at which an incumbent LEC is required to provide expanded interconnection for switched transport pursuant to § 64.1401(b)(1) of this chapter.

(e) *Study area.* A common carrier's entire service area within a state.

### § 69.705 Procedure.

Price cap LECs filing petitions for pricing flexibility shall follow the procedures set forth in § 1.774 of this chapter.

### § 69.707 Geographic scope of petition.

(a) *MSA.* (1) A price cap LEC filing a petition for pricing flexibility in an MSA shall include data sufficient to support its petition, as set forth in this subpart, disaggregated by MSA.

(2) A price cap LEC may request pricing flexibility for two or more MSAs in a single petition, provided that it submits supporting data disaggregated by MSA.

(b) *Non-MSA.* (1) A price cap LEC will receive pricing flexibility with respect to those parts of a study area that fall outside of any MSA, provided that it provides data sufficient to support a finding that competitors have collocated in a number of wire centers in that non-MSA region sufficient to satisfy the criteria for the pricing flexibility sought in the petition, as set forth in this subpart, if the region at issue were an MSA.

(2) The petitioner may aggregate data for all the non-MSA regions in a single study area for which it requests pricing flexibility in its petition.

(3) A petitioner may request pricing flexibility in the non-MSA regions of two or more of its study areas, provided that it submits supporting data disaggregated by study area.

**§69.709 Dedicated transport and special access services other than channel terminations between LEC end offices and customer premises.**

(a) *Scope.* This paragraph governs requests for pricing flexibility with respect to the following services:

(1) Entrance facilities, as described in §69.110.

(2) Transport of traffic over dedicated transport facilities between the serving wire center and the tandem switching office, as described in §69.111(a)(2)(iii).

(3) Direct-trunked transport, as described in §69.112.

(4) Special access services, as described in §69.114, other than channel terminations as defined in §69.703(a)(2) of this part.

(b) *Phase I triggers.* To obtain Phase I pricing flexibility, as specified in §69.727(a) of this part, for the services described in paragraph (a) of this section, a price cap LEC must show that, in the relevant area as described in §69.707 of this part, competitors unaffiliated with the price cap LEC have collocated:

(1) In fifteen percent of the petitioner's wire centers, and that at least one such collocator in each wire center is using transport facilities owned by a transport provider other than the price cap LEC to transport traffic from that wire center; or

(2) In wire centers accounting for 30 percent of the petitioner's revenues from dedicated transport and special access services other than channel terminations between LEC end offices and customer premises, determined as specified in §69.725 of this part, and that at least one such collocator in each wire center is using transport facilities owned by a transport provider other than the price cap LEC to transport traffic from that wire center.

(c) *Phase II triggers.* To obtain Phase II pricing flexibility, as specified in §69.727(b) of this part, for the services described in paragraph (a) of this section, a price cap LEC must show that, in the relevant area as described in §69.707 of this part, competitors unaffiliated with the price cap LEC have collocated:

(1) in 50 percent of the petitioner's wire centers, and that at least one such collocator in each wire center is using transport facilities owned by a transport provider other than the price cap LEC to transport traffic from that wire center; or

(2) in wire centers accounting for 65 percent of the petitioner's revenues from dedicated transport and special access services other than channel terminations between LEC end offices and customer premises, determined as specified in §69.725 of this part, and that at least one such collocator in each wire center is using transport facilities owned by a transport provider other than the price cap LEC to transport traffic from that wire center.

**§69.711 Channel terminations between LEC end offices and customer premises.**

(a) *Scope.* This paragraph governs requests for pricing flexibility with respect to channel terminations between LEC end offices and customer premises.

(b) *Phase I triggers.* To obtain Phase I pricing flexibility, as specified in §69.727(a) of this part, for channel terminations between LEC end offices and customer premises, a price cap LEC must show that, in the relevant area as described in §69.707 of this part, competitors unaffiliated with the price cap LEC have collocated:

(1) In 50 percent of the petitioner's wire centers, and that at least one such collocator in each wire center is using transport facilities owned by a transport provider other than the price cap LEC to transport traffic from that wire center; or

(2) In wire centers accounting for 65 percent of the petitioner's revenues from channel terminations between LEC end offices and customer premises, determined as specified in §69.725 of this part, and that at least one such collocator in each wire center is using transport facilities owned by a transport provider other than the price cap LEC to transport traffic from that wire center.

(c) *Phase II triggers.* To obtain Phase II pricing flexibility, as specified in §69.727(b) of this part, for channel terminations between LEC end offices and customer premises, a price cap LEC must show that, in the relevant area as

described in § 69.707, competitors unaffiliated with the price cap LEC have collocated:

(1) In 65 percent of the petitioner's wire centers, and that at least one such collocator in each wire center is using transport facilities owned by a transport provider other than the price cap LEC to transport traffic from that wire center; or

(2) In wire centers accounting for 85 percent of the petitioner's revenues from channel terminations between LEC end offices and customer premises, determined as specified in § 69.725, and that at least one such collocator in each wire center is using transport facilities owned by a transport provider other than the price cap LEC to transport traffic from that wire center.

### § 69.713 Common line, traffic-sensitive, and tandem-switched transport services.

(a) *Scope.* This paragraph governs requests for pricing flexibility with respect to the following services:

(1) Common line services, as described in §§ 69.152, 69.153, and 69.154.

(2) Services in the traffic-sensitive basket, as described in § 61.42(d)(2) of this chapter.

(3) The traffic-sensitive components of tandem-switched transport services, as described in §§ 69.111(a)(2)(i) and (ii).

(b) *Phase I triggers.* (1) To obtain Phase I pricing flexibility, as specified in § 69.727(a), for the services identified in paragraph (a) of this section, a price cap LEC must provide convincing evidence that, in the relevant area as described in § 69.707, its unaffiliated competitors, in aggregate, offer service to at least 15 percent of the price cap LEC's customer locations.

(2) For purposes of the showing required by paragraph (b)(1) of this section, the price cap LEC may not rely on service the competitors provide solely by reselling the price cap LEC's services, or provide through unbundled network elements as defined in § 51.5 of this chapter, except that the price cap LEC may rely on service the competitors provide through the use of the price cap LEC's unbundled loops.

(c) [Reserved]

### §§ 69.714–69.724 [Reserved]

### § 69.725 Attribution of revenues to particular wire centers.

If a price cap LEC elects to show, in accordance with § 69.709 or § 69.711, that competitors have collocated in wire centers accounting for a certain percentage of revenues from the services at issue, the LEC must make the following revenue allocations:

(a) For entrance facilities and channel terminations between an IXC POP and a serving wire center, the petitioner shall attribute all the revenue to the serving wire center.

(b) For channel terminations between a LEC end office and a customer premises, the petitioner shall attribute all the revenue to the LEC end office.

(c) For any dedicated service routed through multiple wire centers, the petitioner shall attribute 50 percent of the revenue to the wire center at each end of the transmission path, unless the petitioner can make a convincing case in its petition that some other allocation would be more representative of the extent of competitive entry in the MSA or the non-MSA parts of the study area at issue.

### § 69.727 Regulatory relief.

(a) *Phase I relief.* Upon satisfaction of the Phase I triggers specified in §§ 69.709(b), 69.711(b), or 69.713(b) for an MSA or the non-MSA parts of a study area, a price cap LEC will be granted the following regulatory relief in that area for the services specified in §§ 69.709(a), 69.711(a), or 69.713(a), respectively:

(1) Volume and term discounts;

(2) Contract tariff authority, provided that

(i) Contract tariff services are made generally available to all similarly situated customers; and

(ii) The price cap LEC excludes all contract tariff offerings from price cap regulation pursuant to § 61.42(f)(1) of this chapter.

(iii) Before the price cap LEC provides a contract tariffed service, under § 69.727(a), to one of its long-distance affiliates, as described in section 272 of the Communications Act of 1934, as amended, or § 64.1903 of this chapter,

the price cap LEC certifies to the Commission that it provides service pursuant to that contract tariff to an unaffiliated customer.

(b) *Phase II relief.* Upon satisfaction of the Phase II triggers specified in §§ 69.709(c) or 69.711(c) for an MSA or the non-MSA parts of a study area, a price cap LEC will be granted the following regulatory relief in that area for the services specified in §§ 69.709(a) or 69.711(a), respectively:

(1) Elimination of the rate structure requirements in subpart B of this part;

(2) Elimination of price cap regulation; and

(3) Filing of tariff revisions on one day's notice, notwithstanding the notice requirements for tariff filings specified in § 61.58 of this chapter.

**§ 69.729 New services.**

(a) Except for new services subject to paragraph (b) of this section, a price cap LEC may obtain pricing flexibility for a new service that has not been incorporated into a price cap basket by demonstrating in its pricing flexibility petition that the new service would be properly incorporated into one of the price cap baskets and service bands for which the price cap LEC seeks pricing flexibility.

(b) Notwithstanding paragraph (a) of this section, a price cap LEC must demonstrate satisfaction of the triggers in § 69.711(b) to be granted pricing flexibility for any new service that falls within the definition of a ''channel termination between a LEC end office and a customer premises'' as specified in § 69.703(a)(2).

**§ 69.731 Low-end adjustment mechanism.**

(a) Any price cap LEC obtaining Phase I or Phase II pricing flexibility for any service in any MSA in its service region, or for the non-MSA portion of any study area in its service region, shall be prohibited from making any low-end adjustment pursuant to § 61.45(d)(1)(vii) of this chapter in all or part of its service region.

(b) Any affiliate of any price cap LEC obtaining Phase I or Phase II pricing flexibility for any service in any MSA in its service region shall be prohibited from making any low-end adjustment pursuant to § 61.45(d)(1)(vii) of this chapter in all or part of its service region.